FOR INFORMATION ONLY



CALC. NO. IP3-CALC-ESS-00263 REV. 0 IP3 [X] JAF [ ]

SYSTEM: ESS

MOD/TASK NO. _____

QA CAT: CAT I

QA CATEGORY: I PRELIMINARY: ____ FINAL: X

FILE #: 001

PROJECT/TASK: Twenty-Four (24) Month Operating Cycle Project

SYSTEM NO./NAME: Engineered Safety Features Actuation System

COMP. PRINTOUT LOC: -

TITLE: Instrument Loop Accuracy/Setpoint Calculation
Steam Generator Low-Low Level: Aux FW and Reactor Trip Initiation

| | NAME | SIGNATURE | DATE |
|---|---|---|---|
| DESIGN ENG.: | | | |
| PREPARER: | R. Valvano | R Valvano | 7-6-92 |
| CHECKER: | G. Durniak | G Durniak | 7-6-92 |
| VERIFIER: NO [ ] | W. Wittich | W Wittich | 7/6/92 |
| APPROVED: | A. Petrenko | A Petrenko | 7/6/92 |

PROBLEM/OBJECTIVE/METHOD

Verify that channel trip for Steam Generator Low-Low Level initiation of Auxiliary Feedwater and Reactor Trip occurs within the Analytical Limits (AL) considering additional drift or uncertainties due to extension of the plant operating cycle from 18 months ± 25% to 24 months ± 25%.

This calculation has been prepared in accordance with ISA-RP 67.04 and DCM-2.

DESIGN BASIS/ASSUMPTIONS

The Steam Generator Low-Low Level instrumentation protects against postulated loss of feedwater accidents and loss of offsite power by initiation of Auxiliary Feedwater and Reactor Trip signals.

See Section 2.0 of this calculation for assumptions.

SUMMARY/CONCLUSION

The existing Trip Setpoint for SG Lo-Lo actuation of Aux FW and Rx Trip is set higher than is required by the total channel uncertainty, therefore, it is conservative. No setpoint change is required.

For SG Lo-Lo Level trip, sufficient margin exists for the existing trip setpoint to insure that channel trip occurs within the Analytical Limit (AL) considering additional drift and uncertainties for the 24 month ±25% operating cycle.

REFERENCES

See Section 3.0 of this calculation.

AFFECTED SYSTEMS/COMPONENTS/DOCUMENTS

ESFAS, Steam Generator Low-Low Level Setpoint
Auxiliary Feedwater System, Reactor Trip, See Section 5.0 for Loop Tag Numbers.

RECEIVED JUL 03 1992 NYPA WPC DOC. CONT. By

[ ] VOIDED OR
[ ] SUPERSEDED BY: _____ (CALC. NO.)

[ ] VOIDS OR
[ ] SUPERSEDES: N/A (CALC. NO.)

FORM DCM 2, 4.1 (JAN. 1991)

9302260268 930218
PDR ADOCK 05000286
P PDR

TABLE OF CONTENTS

| | | PAGE |
|---|---|---|
| 1.0 | PURPOSE | 3 |
| 2.0 | ASSUMPTIONS | 3 |
| 3.0 | REFERENCES | 4 |
| 4.0 | LOOP FUNCTION | 8 |
| 5.0 | LOOP (BLOCK) DIAGRAM | 9 |
| 6.0 | LOOP UNCERTAINTY EQUATIONS | 11 |
| | 6.1 LOOP COMPONENTS | 11 |
| 7.0 | DETERMINE CHANNEL UNCERTAINTY (CU) | 12 |
| 8.0 | OBTAIN ANALYTICAL LIMIT (AL) | 26 |
| 9.0 | DETERMINE SETPOINT (TS) | 27 |
| 10.0 | DETERMINE ALLOWABLE VALUE (AV) | 27 |
| 11.0 | SUMMARY | 30 |
| 12.0 | ATTACHMENTS | 30 |

1.0 PURPOSE

The purpose of this calculation is to determine if the channel trip, based on the setting limits established as part of the Plant Technical Specifications (Ref. 3.3.4) for IP3 will occur within the safety analyses analytical limit (AL) after extending instrument uncertainties and drift from 18 months ± 25% to 24 months ± 25% operating cycle.

This calculation specifically addresses the Steam Generator Low-Low (S.G. Lo-Lo) level initiation of the ESFAS Auxiliary Feedwater actuation signal and the RPS Reactor Trip signal. Both signals are considered in this calculation because they are initiated simultaneously by the same bistable.

The SG postulated accidents and transients have not been altered by the new SG replacements because they have been found to be enveloped by existing FSAR design bases. (ref. 3.3.3)

This calculation is prepared in accordance with DCM-2 (ref. 3.2.2) and the guidelines of ISA-RP 67.04 (ref. 3.1.3).

2.0 ASSUMPTIONS

2.1 Per FSAR section 16.3.3, IP3's seismic horizontal acceleration is less than or equal to 0.2g. WCAP-7817, "Seismic Testing of Electrical and Control Equipment", states that the transmitter output returned to its original pre-test condition after each test (note: tests were based on a maximum seismic test acceleration of 0.7g). (ref. 3.2.18 & 3.3.5)

Similarly, bistables were also tested at 0.7g and results indicate that tripping action of the bistable was not impaired. Therefore, seismic effect is considered negligible.

Since the issuance of WCAP-7817, various components have been replaced with similar equipment. Therefore, seismic effect is considered negligible.

In addition, a seismic event is not considered coincident with any other postulated accident.

2.2 The limiting accidents for IP3 which rely on the low-low steam generator level trip as the primary protection signal are the loss of normal feedwater and loss of offsite power which are loss-of-heat sink events (the feedline break event is not part of the plants licensing basis) (ref. 3.2.12)

2.3 The minimum ambient temperature for instrument calibrations will be 68°F.

2.4 Instrument bus voltage variations do not exceed ± 2.0%. (ref. 3.2.16)

2.5 Additional margin is not considered because the values used in the calculation are inherently conservative (Margin = 0).

2.6 Steam generator shrink and swell effects have been considered in the accident analyses and control operation, therefore, for simplification, these effects are not considered in this calculation.

2.7 Flashing does not occur in the S.G. level reference leg because the water remains at subcooled temperatures before and after an accident.

2.8 The heat transfer time lag from the containment environment to the reference leg is considered negligible.

3.0 REFERENCES

3.1 General

3.1.1 U.S. NRC, Regulatory Guide 1.105, Rev. 2, February, 1986 "Instrument Setpoints For Safety-Related Systems".

3.1.2 ANSI/ISA-S67.04-1988 Standard "Setpoints for Nuclear Safety-Related Instrumentation", dated 2/4/88.

* 3.1.3 ISA RP67.04, Part II, Draft 9, "Methodologies for the Determination of Setpoints for Nuclear Safety-Related Instrumentation", dated 3/22/91.

* 3.1.4 ASME Steam Tables, Thermodynamic and Transport Properties of Steam, fourth edition, 1979.

3.2 IP3 Documents

3.2.1 IES-3, Rev. 0, 1/3/91, Instrument Loop Accuracy and Setpoint Calculations.

3.2.2 DCM-2, Rev. 1, 1/18/91, Preparation and Control of Calculations and Analyses.

3.2.3 Master Equipment List, (ESS System), Rev. 3, 10/19/88.

* 3.2.4 TSP-011, Rev. 4, EQ Spare Parts Review Procedure, 8/30/91.

3.2.5 EQ-GC-99.141 IP3 Instrument Loop Accuracy Calculation File.

3.0 REFERENCES (Continued)

3.2.6 System Description No. 1.2, "Steam Generator", Rev. 1, 5/91.

3.2.7 System Description No. 21.1, "Steam Generator Level Control", Rev. 0, 9/85.

3.2.8 WCAP-7338, "Setpoint Study for Consolidated Edison's Nuclear Power Stations II and III, R. Reymers, September 1969.

* 3.2.9 Tech Manual FO-008, Rev. 0, Overpressurization Protection System, November 1987.

* 3.2.10 Tech Manual WE-97 Instructions for Vertical Steam Generator, 12/15/89.

* 3.2.11 NSE 86-03-152 FW, Rev. 0, Nuclear Safety Evaluation, "Improvement of Steam Generator Level Operating Margin", 8/13/87.

* 3.2.12 Westinghouse letter to NYPA (K. Chapple), INT-86-670, 10/10/86.

* 3.2.13 Westinghouse letter to NYPA (L. Hill), INT-89-671, dated 6/27/89.

* 3.2.14 IP3 EOP Setpoint Documentation, "EOP Setpoint No. M.2", Revision dated 12/22/87.

* 3.2.15 Vantage 5 Reload Transition Safety Report For The Indian Point Unit 3 Nuclear Station, October 1988.

* 3.2.16 Tech Manual WE-117, One Phase Instrument Power Supply, August 1979.

* 3.2.17 Report No. IP3-RPT-ESS-00321, Instrument Drift Analysis for ESFAS, Preliminary Rev. 0, dated 6/17/92.

* 3.2.18 WCAP-7817, "Seismic Testing of Electrical and Control Equipment", December, 1971.

3.3 Final Safety Analysis Report (FSAR) Rev. 7, July 1991.

3.3.1 Chapter 6, Appendix 6F, Qualification of Electrical Equipment Important to Safety.

* 3.3.2 Chapter 7, Section 7.2, Protective Systems.

* 3.3.3 Chapter 14, Safety Analysis.

* 3.3.4 Chapter 15, Technical Specification and Bases, Through Amendment No. 111, dated 3/9/92.



*Used as Design Input

3.0 REFERENCES (Continued)

* 3.3.5 Chapter 16, Seismic Design Criteria For Structures And Equipment.

3.4 Drawings

* 3.4.1 RPS Rack Layout Drawings:

9321-H-39903, Sht. 10, Rev. 2 (L-427C, 437C)
9321-H-39903, Sht. 18, Rev. 0 (L-417C, 447C)
9321-H-39903, Sht. 22, Rev. 1 (L-417B, 427B 437B, 447B)
9321-H-39903, Sht. 28, Rev. 0 (L-417A, 427A 437A, 447A)

* 3.4.2 Interconnection Wiring Diagrams:

9321-H-39923, Sht. 8, Rev. 2, (L-427C)
9321-H-39923, Sht. 9, Rev. 2, (L-437C)
9321-H-39923, Sht. 21, Rev. 2, (L-417C)
9321-H-39923, Sht. 22, Rev. 2, (L-447C)
9321-H-39923, Sht. 28, Rev. 1, (L-417B, 427B)
9321-H-39923, Sht. 29, Rev. 1, (L-437B, 447B)
9321-H-39923, Sht. 39, Rev. 2, (L-417A)
9321-H-39923, Sht. 40, Rev. 2, (L-427A)
9321-H-39923, Sht. 41, Rev. 2, (L-437A)
9321-H-39923, Sht. 42, Rev. 2, (L-447A)

* 3.4.3 Flow Diagram: Boiler Feedwater

9321-F-20193, Rev. 29

* 3.4.4 Block Diagram:

IP3V-171-4.14-0074, Rev. 1

IP3V-526-4.14-0005, Rev. 0

3.4.5 Logic Diagram: 5651D72 Sht. 10, Rev. 4

3.4.6 Cable and Conduit Schedule (Inside Containment) 6604-158-LL-1, Issue 7, July 1991.

* 3.4.7 Primary Plant Instrument piping & Supports Instrumentation:

9321-F-70253 Sht. 1, Rev. 8

9321-F-70263 Sht. 2, Rev. 11

3.0 REFERENCES (Continued)

* 3.4.8 Transmitter Racks Piping Arrangement:

9321-F-70513 Sht. 4, Rev. 9

3.5 Calibration procedures

* 3.5.1 IC-AD-2, Rev. 7, Calibration and Control of Measuring and Test Equipment, 7/5/90.

3.5.2 AP-17, Rev. 5, Calibration of M&TE, 4/25/90.

* 3.5.3 AP-19, Rev. 10, Surveillance Test Program, 7/13/90.

* 3.5.4 Steam Generator Level Control System Transmitters Check and Calibration Procedures:

3PC-R07A, Rev. 1 (CHNL 1)
3PC-R07B, Rev. 1 (CHNL 2)
3PC-R07C, Rev. 1 (CHNL 3)
3PC-R07D, Rev. 1 (CHNL 4)

* 3.5.5 Steam Generator Level Analog Functional Procedure:

3PT-M08, Rev. 13

3.6 Loop Component Specification Sheets

* 3.6.1 LCS-8 Rev. 0, 2/10/88 (Transmitters)

3.6.2 LCS-29 Rev. 0, 2/10/88 (Cable)

3.6.3 LCS-33 Rev. 0, 12/9/88 (Penetration)

3.6.4 LCS-37A Rev. 0, 5/12/88 (Splices)

3.7 Foxboro Product Literature

* 3.7.1 Product Specification: PSS 9-1B1A N-E11 and N-E12 Series Nuclear Electronic Pressure Transmitters, 1987.

3.7.2 General Specification: GS-2A-12B2 C, 610AT and 610AC Single Power Supply, 11/84.

* 3.7.3 Instruction: 18-635, Model 610A power supply styles B and C, 11/69.



*Used as Design Input

3.0 REFERENCES (Continued)

* 3.7.4 General Specification: GS-2A-5A2A, 63U Series Electronic Consotrol alarm, 8/75.

* 3.7.5 Instruction: 18-692 Model 63U-B Duplex Alarm, Model 63U-F Duplex Difference Alarm, 1/69.

4.0 LOOP FUNCTION

The Steam Generator low-low level trip signal initiates both the Auxiliary Feedwater (Aux FW) actuation signal and a Reactor Trip (Rx Trip) signal. These signals are initiated simultaneously whenever lo-lo level is detected in one-out-of-four steam generators. Three transmitters (L-417A, L-417B, and L-417C on SG #31) on each steam generator monitor the SG level. Low low level detected by two transmitters (two-out-of-three Logic) on any one steam generator will initiate both Aux FW and Rx Trip. The Steam Generator level transmitters also provide detection for SG high level, lo level mismatch, control and indication. These functions are not considered in the analyses of this calculation.

(ref. 3.4.5)

The Rx Trip and Aux FW initiation on low-low water level in any steam generator provides the necessary protection against a loss of normal feedwater or loss of offsite power. (ref. 3.3.3)

The low-low setpoint assures that there will be sufficient water inventory in the steam generators at the time of trip to allow for starting delays for the Auxiliary Feedwater system. (page 2.3.6 of ref. 3.3.4)

5.0 LOOP (BLOCK) DIAGRAM

5.1 Loop Diagram

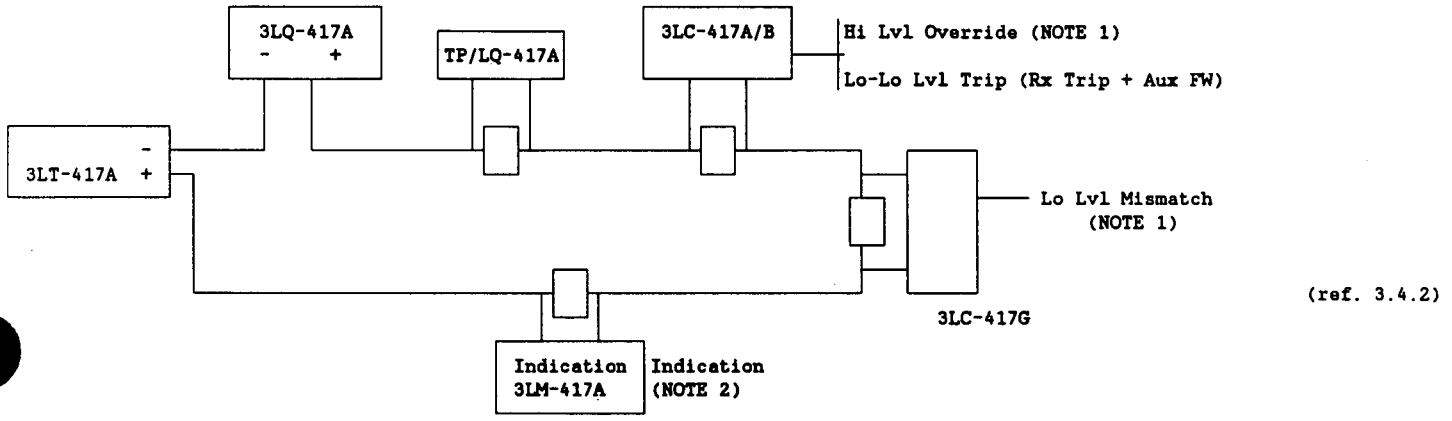


(ref. 3.4.2)

The above loop diagram is typical for the following Loops:

| | | | | |
|---|---|---|---|---|
| SG | 3LT-417B | 3LQ-417B | 3LC-417E/F | (Ref. 3.4.2) |
| 31 | 3LT-417C | 3LQ-417C | 3LC-417C/D | ↓ |
| SG | 3LT-427A | 3LQ-427A | 3LC-427A/B | ↓ |
| 32 | 3LT-427B | 3LQ-427B | 3LC-427E/F | ↓ |
| | 3LT-427C | 3LQ-427C | 3LC-427C/D | ↓ |
| SG | 3LT-437A | 3LQ-427A | 3LC-437A/B | ↓ |
| 33 | 3LT-437B | 3LQ-437B | 3LC-437C/D | ↓ |
| | 3LT-437C | 3LQ-437C | 3LC-437E/F | ↓ |
| SG | 3LT-447A | 3LQ-447A | 3LC-447A/B | ↓ |
| 34 | 3LT-447B | 3LQ-447B | 3LC-447E/F | ↓ |
| | 3LT-447C | 3LQ-447C | 3LC-447C/D | ↓ |

NOTES

1. Uncertainty analyses for these bistable functions are not considered in this calculation.

2. Uncertainty analyses for the indication portion of the loop is not considered in this calculation (This has been addressed by ref. 3.2.5).

5.0 LOOP (BLOCK) DIAGRAM

5.2 Block Diagram (Ref. 3.4.4)

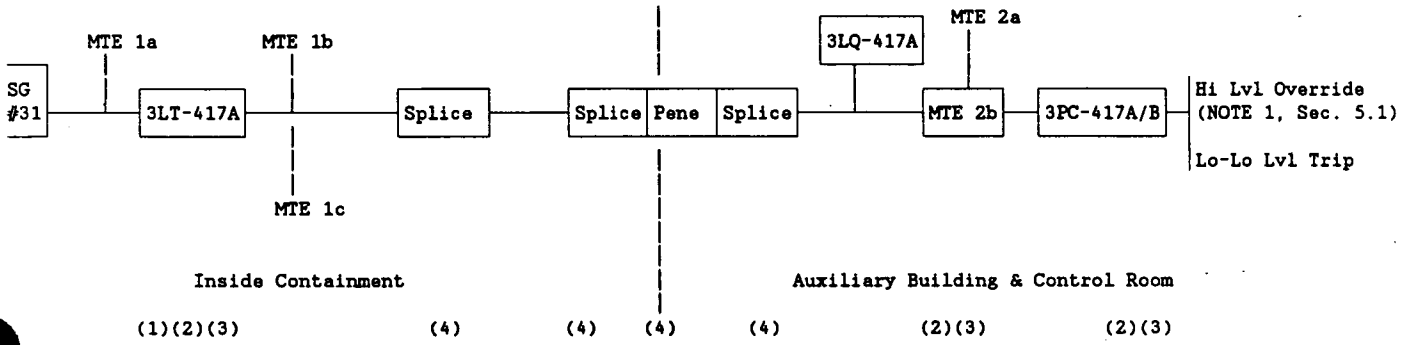


Uncertainty Allowances To Address

(1) Process Measurement Effects

(2) Instrument Uncertainty (ref. 3.1.3)

(3) Calibration Uncertainty

(4) Other Uncertainties

Loop L-417A is shown above. This loop is typical for the loops itemized in Section 5.1.

## 6.0 LOOP UNCERTAINTY EQUATIONS

Reference Section 12.0.

### 6.1 LOOP COMPONENTS

The SG Lo-Lo level (actuation of Aux FW and Rx Trip) loop is comprised of the following components:

| | | | |
|---|---|---|---|
| 6.1.1 | Transmitters (module $e_1$) | | |
| | Tag Nos: | 3LT-417A, 417B, 417C<br>3LT-427A, 427B, 427C<br>3LT-437A, 437B, 437C<br>3LT-447A, 447B, 447C | (ref. 3.4.3) |
| | Manufacturer: | Foxboro | (ref. 3.6.1) |
| | Model No: | N-E13DH-HIM1-BEK | (ref. 3.6.1) |
| 6.1.2 | Bistable (module $e_2$) | | |
| | Tag Nos: | 3LC-417A/B, 417E/F, 417C/D<br>3LC-427A/B, 427E/F, 427C/D<br>3LC-437A/B, 437E/F, 437C/D<br>3LC-447A/B, 447E/F, 447C/D | (ref. 3.4.2) |
| | Manufacturer: | Foxboro | (ref. 3.4.1) |
| | Model No: | 63U-BC-OHEA-F Duplex Alarm | (ref.3.4.1) |
| 6.1.3 | Power Supply | | |
| | Tag Nos: | 3LQ-417A, 417B, 417C<br>3LQ-427A, 427B, 427C<br>3LQ-437A, 437B, 437C<br>3LQ-447A, 447B, 447C | (ref. 3.4.2) |
| | Manufacturer: | Foxboro | (ref. 3.4.1) |
| | Model No: | 610AC-O | (ref. 3.4.1) |
| 6.1.4 | Cable: | Lewis cable 1/0#16, silicone insulated | (ref. 3.6.2) |
| 6.1.5 | Splices: | Raychem WCSF-N | (ref. 3.6.4) |
| 6.1.6 | Penetration: | Westinghouse H42, Model No. WX31775 | (ref. 3.6.3) |

7.0 DETERMINE CHANNEL UNCERTAINTY (CU)

Channel Uncertainty is determined from,

$$CU = \pm\sqrt{PM^2 + PE^2 + e_1^2 + e_2^2 + IRE^2} \pm B^*$$ (ref. 3.1.3)

Each effect is calculated as follows:

7.1 Process Measurement Effects (PM)

The accident process measurement effects associated with SG Lo-Lo level potentially could include the reference leg heatup caused from feedline breaks inside containment. However, from assumption 2.2 and IP3's licensing basis the SG reference leg heatup error is not a consideration for the uncertainty analyses. Therefore, process measurement effects due to accident conditions are non-existing. (ref. 3.2.11 and 3.2.12)

$PM_{HELB} = 0$

Three additional normal process measurement effects need to be addressed in the uncertainty analyses. These effects arise from errors due to the changes in SG pressures from changes in SG fluid densities. The new effects are evaluated based on assumptions 2.6, 2.7 and 2.8. These three effects are:

$PM_1$ = Calibration error at design Press/Temp

$PM_2$ = Reference leg heatup effects

$PM_3$ = Calibration error at Operating Press/Temp

7.1.1 Determine $PM_1$ Effects

The $PM_1$ effect is the error uncertainty due to the difference between actual Field Calibrated Transmitter Span and Ideal Calibrated Transmitter Span at SG design pressure and temperature.

Field Calibrated Transmitter Span = 137.0 in $H_2O$ -39.0 in $H_2O$ = 98.0 in $H_2O$

(ref. 3.5.4)

7.1 Process Measurement Effects (PM) (Continued)

To determine the Ideal Calibration Span, both the zero percent level and the 100% level of the SG must be determined in inches of water for the reference leg. This is solved from the following:

dP = PRESSURE HI-PRESSURE LO

dP = HR (SGR) - HW (SGW) - HS (SGS),

where, dP = Differential Pressure at the transmitter

HR = Height of Reference Leg

HS = Height of Steam

HW = Height of Process Water

SGR = Specific Weight (density) of Reference Leg

SGW = Specific Weight (density) of water at saturation temp.

SGS = Specific Weight (density) of steam at saturation temp.

The SG level transmitters are calibrated at the following SG design conditions:

| | | |
|---|---|---|
| Calibration Temperature : | 100°F | (ref. 3.2.14) |
| Height of Reference Leg - (HR) : | 143.0 inches | (ref. 3.2.10) |
| Process Calibration Pressure : | 1100 psia | (ref. 3.2.10) |
| Process Calibration Temperature : | 557°F (at saturation) | |

Specific Volume ($v_f$) of the fluids involved (from steam tables):

| | | |
|---|---|---|
| Process Water : | 0.02195 $ft^3/lbm$ | (ref. 3.1.4) |
| Steam : | 0.40058 $ft^3/lbm$ | |
| Reference Leg 100°F : | 0.016130 $ft^3/lbm$ | |
| Water at 68°F : | 0.016046 $ft^3/lbm$ (base condition) | |

The density (Specific Weight) of a fluid is $\rho = \frac{1}{v_f}$

Specific Weight ($\rho$) of the fluids involved is:

Process Water (SGW): 45.56 lbm/ft$^3$ (ref. 3.1.4)

Steam (SGS): 2.50 lbm/ft$^3$

Reference Leg 100°F (SGR): 62.00 lbm/ft$^3$

Water at 68°F : 62.32 lbm/ft$^3$ (base condition)

For 0% level in SG, Calibration dP equals:

$dP_{(0\%)}$ = HR (SGR) - HW (SGW) - HS (SGS), HW = 0

= HR (SGR - SGS)

$$dP_{(0\%)} = 143 \text{ in} \left(62.00\frac{lbm}{ft^3} - 2.50\frac{lbm}{ft^3}\right) = 8508.5\ \frac{in-lbm}{ft^3}$$

dividing $dP_{(0\%)}$ by specific weight of water at base conditions (68°F)

$$dP_{(0\%)} = \left(8508.5\frac{in-lbm}{ft^3}\right)\left(\frac{ft^3}{62.32\ lbm}\right)$$

$dP_{(0\%)}$ = 136.53 in $H_2O$

For 100% level in SG, Calibration dP equals:

$dP_{(100\%)}$ = HR (SGR) - HW (SGW) - HS (SGS), HS = 0

= HR (SGR - SGW)

$$= 143 \text{ in} \left(62.00\frac{lbm}{ft^3} - 45.56\frac{lbm}{ft^3}\right) = 2350.92\ \frac{in-lbm}{ft^3}$$

dividing $dP_{(100\%)}$ by specific weight of water at base conditions (68°F)

$$= 2350.92 \text{ in. } \frac{lbm}{ft^3}\left(\frac{ft^3}{62.32\ lbm}\right)$$

$dP_{(100\%)}$ = 37.72 in $H_2O$

Ideal Calibrated Span = $dP_{(100\%)}$ - $dP_{(0\%)}$

Ideal dP = 136.53 in $H_2O$ - 37.72 in $H_2O$

Ideal dP = 98.8 in $H_2O$

To determine the $PM_1$ effect, the delta error between Ideal Calibration Span and Field Calibration Span is considered.

$$PM_1 = \frac{\textit{Ideal Span} - \textit{Field Span}}{\textit{Ideal Span}} \times 100$$

$$= \frac{98.8 - 98.0}{98.8} \times (100)$$

$$PM_1 = +0.81\% \text{ of span}$$

$PM_1$ is a bias in the positive direction.

7.1.2 Determine $PM_2$ Effects

The reference leg heatup effects ($PM_2$) occur when the reference leg is subjected to a temperature rise from calibration temperature to normal (ambient) operating temperature.

The SG narrow range transmitter process connections are located at approximately the 115' containment elevation and the 103' containment elevation. At the 95' elevation and above the normal ambient containment temperature is 125°F. (ref. 3.2.4)

Calculating the reference leg heat effects from calibration temperature (100°F) to normal operating ambient temperature (125°F) with SG process pressure and temperature constant (P =1100 psia, T = 557°F):

The specific volume ($V_f$) and specific weight (SGR) of water at 125°F is,

Reference leg (125°F): $V_f = 0.016225 \frac{ft^3}{lbm}$, $SGR = 61.63 \frac{lbm}{ft^3}$ (ref. 3.1.4)

For 0% level in SG: $dP_{(0\%)} = 143 \text{ in} \left(61.63 \frac{lbm}{ft^3} - 2.50 \frac{lbm}{ft^3}\right)$

$= 8455.59 \text{ in} \frac{lbm}{ft^3} \left(\frac{ft^3}{62.32\ lbm}\right)$

$dP_{(0\%)} = 135.68 \text{ in } H_2O$

Calculating for reference leg heatup error

$dP_{(HR)} = dP_{(0\%)}$ (at 100°F) - $dP_{(0\%)}$ (at 125°F)

$= 137.0 - 135.68$

$= 1.32 \text{ in } H_2O$

Reference leg heat up error in "% of span"

$dP_{(HR)}$ error is calculated using the field calibration span (98.0 in $H_2O$) and not the ideal calibration span (98.8 in $H_2O$).

$$dP_{(HR)} = \frac{1.32}{98.0\ (field\ cal\ span)} \times 100$$

$PM_2 = dP_{(HR)} = +\ 1.35\%$ of span

$PM_2$ effect is a bias in the positive direction.

7.1.3 Determine $PM_3$ Effects

Both $PM_1$ and $PM_2$ error effects are based on SG design pressure (1100 psia) and temperature (557°F). $PM_3$ effect is the error at SG operating pressure (770 psia) and temperature (513.8°F) less the error at SG design pressure (1100 psia) and temperature (557°F). Both errors are considered at SG 8% water level (near SG lo-lo initiation of Aux FW and Rx Trip). Therefore,

$PM_3 = dP_{(8\%)} = dP_{(8\%)}$ (SG Operating Conditions) - $dP_{(8\%)}$ (SG Design Conditions)

Solving for $dP_{(8Z)}$, given the densities of fluids in section 7.1.1, at SG design conditions:

$$dP_{(8Z)} = HR(SGR) - HW(SGW) - HS(SGS)$$

$$= 143\,in\left(62.00\frac{lbm}{ft^3}\right) - 11.44\,in\left(45.56\frac{lbm}{ft^3}\right) - 131.56\,in\left(2.5\frac{lbm}{ft^3}\right)$$

$$= 8015.90\ in\left(\frac{lbm}{ft^3}\right)\left(\frac{ft^3}{62.32\,lbm}\right)$$

$$dP_{(8Z)} = 128.62 \text{ in } H_2O$$

Solving for $dP_{(8Z)}$, given the following fluid parameters at SG Operating Conditions:

At P = 770 psia, T = 513.8°F,

Steam specific volume = 0.59267 $\frac{ft^3}{lbm}$, SGS = 1.69 $\frac{lbm}{ft^3}$

Specific Volume

Process Water = 0.02076 $\frac{ft^3}{lbm}$, SGW = 48.17 $\frac{lbm}{ft^3}$

$$dP_{(8Z)} = 143 \text{ in}\left(61.63\frac{lbm}{ft^3}\right) - 11.44 \text{ in}\left(48.17\frac{lbm}{ft^3}\right) - 131.56 \text{ in}\left(1.69\frac{lbm}{ft^3}\right)$$

$$= 8039.69 \text{ in } \frac{lbm}{ft^3}\left(\frac{ft^3}{62.32\,lbm}\right)$$

$$dP_{(8Z)} = 129.01 \text{ in } H_2O$$

Solving for $PM_3$ in "% of span".

$$PM_3 = dP_{(8Z)} = \frac{129.01 - 128.62}{98.0} \times 100 = +0.40\% \text{ of span}$$

$PM_3$ effect is a bias in the positive direction.

7.1.4 The total Process Measurement Effects are:

$PM_1$ = + 0.81% of span

$PM_2$ = + 1.35% of span

$PM_3$ = + 0.40% of span

Total PM Effects = + 2.56% of span

The PM effects before a SG low-low trip are in one direction only, therefore PM is considered a bias.

$PM = B^+ = +2.56\%$ of span

7.2 Primary Element Effect (PE)

Primary Element effects are not applicable because there is no primary element in the loop. Therefore, PE = 0.

7.3 Level Transmitter ($e_1$)

The level transmitter uncertainty is,

$$e_1 = \pm\sqrt{RA_1^2 + DR_1^2 + TE_1^2 + RE_1^2 + SE_1^2 + HE_1^2 + SP_1^2 + PS_1^2 + MTE_1^2} \pm B_1^{\pm}$$

(ref. 3.1.3)

Each effect is calculated as follows:

7.3.1 Reference Accuracy ($RA_1$)

The vendor specified reference accuracy is,

$RA_1 = \pm 0.5\%$ of Span (ref. 3.7.1)

From ISA, the reference accuracy must be compared to the calibration Tolerance and the larger value used for the uncertainty calculation.

Calibration tolerance $= \frac{2}{400} X\ 100 = \pm 0.5\%$ of span (ref. 3.4.4)

The Reference Accuracy of transmitter equals the Calibration Tolerance. Therefore, either value is acceptable for calculating $e_1$.

7.3.2 Drift ($DR_1$)

The vendor specified drift is,

$DR_1 = \pm$ 0.25% of span/yr (ref. 3.7.1)

Given that the drift uncertainty for a given period is a random and independent term, and that drift varies linearly with time within any one period, drift for 30 months (2 1/2 periods) is calculated as follows:

$$DR_1 = \pm\sqrt{0.25^2 + 0.25^2 + 0.125^2}$$

$$= \pm 0.38\% \text{ of Span/2.5 yrs}$$

7.3.3 Temperature Effect ($TE_1$)

$TE_1$ = 1.5% of span/100°F (ref. 3.7.1)

From ISA, $TE = \pm \frac{X\% (\Delta T)}{Y}$ (ref. 3.1.3)

The normal conservative temperature environment inside containment at the 95' elevation is 125°F. (ref. 3.2.4)

From Assumption 2.3 the minimum calibration temperature is 68°F.

In order to Calculate for normal temperature effects, the temperature differential is determined to be,

$$\Delta T = 125°F - 68°F = 57°F$$

Given that Y = 100°F, TE is determined to be,

$$TE_1 = \pm \frac{(1.50)(57)}{100} = \pm 0.86\% \text{ of span}$$

Therefore, $TE_1$ normal = ± 0.86% of span

From Assumption 2.2, the accident temperature effects are not applicable. Therefore,

$TE_1$ (Accident) = 0

7.3.4 Radiation Effect ($RE_1$)

Accident radiation effects are non-existing due to assumption 2.2, Therefore, (ref. 3.6.1)

$RE_1 = 0$ (ref. 3.2.12 and 3.3.3)

7.3.5 Seismic Effect ($SE_1$)

Per assumption 2.1 the seismic effect is not applicable,

$SE_1 = 0$

7.3.6 Humidity Effect ($HE_1$)

The vendor specified operating specifications envelope the humidity experienced by the transmitter inside containment. Therefore,

(ref. 3.2.4)

For normal operation, $HE_1 = 0$. (ref. 3.7.1)

For accident humidity effects, assumption 2.2 provides basis for non-existing humidity effects.

7.3.7 Static Pressure Effects ($SP_1$)

For normal operation, the ambient static pressure effect consists of two components:

Static Pressure Span Shift = ± 1.0% of span/2000# (ref. 3.6.1)

Static Pressure Zero Shift = ± 0.5% of span/2000#

The above combined ambient static pressure effect of ± 1.5% of span is applicable for any span below 2000 lbs. Since the SG transmitter span is 39 to 137 in of $H_2O$, (well below 2000 lbs) it is conservative to assume the normal static pressure effect above,

$SP_1$ (normal) = ± 1.5% of span

From Assumption 2.2, accident static pressure effects are not applicable therefore,

$SP_1$ (accident) = 0

7.3.8 Power Supply Effects ($PS_1$)

$PS_1$ = ± 0.1% Span / ± 10% dV (ref. 3.6.1)

From Assumption 2.4, the power supply voltage will not deviate more than 10%. Therefore, the above power supply effect is conservative for this calculation.

7.3.9 Measuring & Test Equipment Effect ($MTE_1$)

The $MTE_1$ equipment used to calibrate the transmitter includes the following:

$MTE_{1a}$ = Digital Pressure gage, Pennwalt model 66D-2C-0400, 0-400 in $H_2O$ (ref. 3.5.4)

$MTE_{1b}$ = Precision Resistor, 10 OHMS (ref. 3.5.4)

$MTE_{1c}$ = Digital Volt Meter, Fluke model 8050A (ref. 3.5.4)

$$MTE_1 = \sqrt{MTE_{1a}^2 + MTE_{1b}^2 + MTE_{1c}^2}$$

Where:

$$MTE_{1a}\ MTE_{1b},\ MTE_{1c} = \sqrt{RA_{MTE}^2 + RA_{STD}^2 + RE^2}$$ (ref. 3.1.3)

and,

$RA_{MTE}$ = MTE Reference Accuracy

$RA_{STD}$ = Reference Standard Accuracy

RE = Reading Accuracy

7.3.9 Measuring & Test Equipment Effect ($MTE_1$) (continued)

However, the calibration procedures require Measuring and Test Equipment to have an accuracy greater than or equal to that of the equipment being calibrated. Therefore, it is conservative to assume an MTE effect equal to the transmitter reference accuracy including any MTE reading error or reference standard error. (ref. 3.5.3)

$MTE_{1a}$ = $MTE_{1c}$ = $RA_1$ = ± 0.5% of span

The precision resistor $MTE_{1b}$ shall have a tolerance of 9.99 to 10.01 ohms or ± 0.1% of span. Therefore, (ref. 3.5.1)

$$MTE_{1b} = \pm 0.1\% \text{ of Span}$$

Solving for $MTE_1$ $= \pm\sqrt{MTE_{1a}^2 + MTE_{1b}^2 + MTE_{1c}^2}$

$$= \pm\sqrt{.5^2 + .1^2 + .5^2}$$

$$MTE_1 = \pm 0.72\% \text{ of Span}$$

7.3.10 Determine $e_1$

$$e_1 = \pm\sqrt{RA_1^2 + DR_1^2 + TE_1^2 + RE_1^2 + SE_1^2 + HE_1^2 + SP_1^2 + PS_1^2 + MTE_1^2} \pm B_1^*$$

Where, Bias = $B_1 = 0$

Solving for $e_1$,

$$e_1 = \pm\sqrt{0.5^2 + 0.38^2 + 0.86^2 + 1.5^2 + 0.1^2 + 0.72^2}$$

$$e_1 = \pm 1.98\% \text{ of span}$$

7.4 Bistable ($e_2$)

The bistable uncertainty is,

$$e_2 = \pm\sqrt{RA_2^2 + DR_2^2 + TE_2^2 + RE_2^2 + SE_2^2 + HE_2^2 + SP_2^2 + PS_2^2 + MTE_2^2} \pm B_2^*$$ (ref. 3.1.3)

Each effect is calculated as follows:

7.4.1 Reference Accuracy ($RA_2$)

A comparison between reference accuracy and calibration tolerance is made for the bistable. The higher of the two values is used in the uncertainty analyses.

$RA_2 = \pm 0.5\%$ of span (ref. 3.7.5)

Calibration Tolerance ($CT_2$) is determined from the bistable calibration procedure as, (ref. 3.5.5)

$$CT_2 = \frac{2}{400} X\ 100 = \pm 0.5\% \text{ of span}$$

Since $RA_2$ and $CT_2$ are equal, either value may be used to determine $e_2$.

The Foxboro bistable units with each cord sets (model 63U-BC) are connected parallel to a 100 ohm resistor ($RM_1$) which is mounted externally on a terminal block as shown on the interconnecting wiring diagrams (ref. 3.4.2). The resistor uncertainty (± 0.1%) is included as part of the specified bistable reference accuracy. (ref. 3.7.5)

NOTE: The total resistance of all resistors in the loop is within the recommended "output loop resistance operating area" for the transmitter. Therefore, the resistors, and associated bistables, do not introduce any additional uncertainty. (ref. 3.7.5)

7.4.2 Drift ($DR_2$)

The overpressurization system manual provides drift values of ± 0.2/yr for various 63U series bistables. The S.G. Lo-Lo Level bistable is also a series 63U bistable. Therefore, by similarity it is acceptable to assume this drift value for the bistable uncertainty determination.

$DR_2$ = 0.2% of span/yr (ref. 3.2.9)

The drift value above, is conservative because the bistables are subjected to monthly checks and calibrations.

7.4.3 Temperature Effects ($TE_2$)

$TE_2$ = ± 0.5% of span for a 50°F change in ambient temperature

(ref. 3.7.4)

Control Room equipment is designed for a maximum temperature of 120°F.

(page 7.2-7 of ref 3.3.2)

Given that calibration may be performed at 68°F (assumption 2.3), the temperature effect over a temperature change of 52°F (120°F-68°F) is assumed to vary linearly as follows:

$$TE_2 = \pm 0.5\% \left(\frac{52}{50}\right)$$

$$TE_2 = \pm 0.52\% \text{ of span}$$

The above temperature effect is conservative.

7.4.4 Radiation Effects ($RE_2$)

$RE_2 = 0$

Radiation effects are considered negligible because the bistable is located inside of a mild environment.

7.4.5 Seismic Effects ($SE_2$)

$SE_2 = 0$ (Assumption 2.1)

7.4.6 Humidity Effects ($HE_2$)

$HE_2 = 0$

The bistable is located inside of a mild environment.

7.4.7 Static Pressure Effects ($SP_2$)

$SP_2 = 0$

Static pressure effects are not applicable to electronic components.

7.4.8 Power Supply Effects ($PS_2$)

$PS_2 = \pm 0.5\%$ of span due to a $\pm 10\%$ change in line voltage.

(ref. 3.2.9)

From assumption 2.3, therefore,

$PS_2 = \pm 0.5\%$ of span

7.4.9 Measuring and Test Equipment ($MTE_2$)

The bistable is tested using the following MTE's:

$MTE_{2a}$ = Fluke DVM model 8810A (ref. 3.5.5)

$MTE_{2b}$ = Test Point Resistor (ref. 3.5.5)

From the calibration procedures the MTE's must be equal to or better in accuracy to the bistable. Therefore, (ref. 3.5.3)

$MTE_{2a} = MTE_{2b} = RA_2 = \pm 0.5\%$ of span

$$MTE_2 = \sqrt{MTE_{2a}^2 + MTE_{2b}^2}$$

Therefore,

$$MTE_2 = \pm \sqrt{.5^2 + .5^2}$$

$$MTE_2 = \pm 0.71\% \text{ of span}$$

7.4.10 Determine $e_2$

$$e_2 = \pm \sqrt{RA_2^2 + DR_2^2 + TE_2^2 + RE_2^2 + SE_2^2 + HE_2^2 + SP_2^2 + PS_2^2 + MTE_2^2} \pm B_2^{\pm}$$

Where Bias = $B_2 = 0$,

$$e_2 = \pm \sqrt{0.5^2 + 0.2^2 + 0.52^2 + 0.5^2 + 0.71^2}$$

$$e_2 = \pm 1.14\% \text{ of span}$$

7.5 Insulation Resistance Effect (IRE)

The methodology used to determine IRE is shown in Section 12.0, Attachment 2. The IRE effect is considered on a loop basis.

IRE effects are negligibly small under normal, non-accident conditions.

(Ref. 3.1.3)

From assumption 2.2, IRE effects are not applicable, therefore,

$$IRE = 0$$

7.6 Calculating Channel Uncertainty (CU)

$$CU = \pm \sqrt{PM^2 + PE^2 + e_1^2 + e_2^2 + IRE^2} \pm B^{\pm}$$

The biases ($B^{\pm}$) associated with the loop include the following:

PM = + 2.56% of span (Section 7.1.4)

IRE = 0 (Section 7.5)

The module uncertainties include:

PE = 0 (Section 7.2)

$e_1$ = ± 1.98% of span (Section 7.3.10)

$e_2$ = ± 1.14% of span (Section 7.4.10)

$$CU = \pm\sqrt{1.98^2 + 1.14^2} + 2.56$$

$$= \pm 2.28 + 2.56\% \text{ of span}$$

$$CU^+ = +4.84\% \text{ of span}$$

$$CU^- = -2.28\% \text{ of span}$$

The negative value of CU is not used to determine the setpoint (TS) for a decreasing parameter, since the process is decreasing towards the analytical limit. (ref. 3.1.3)

Therefore solving for CU in terms of "in of $H_2O$", given that transmitter span = 98.0 in of $H_2O$. (ref. 3.5.4)

$$CU^+ = +4.84\ (98.0)$$

$$CU^+ = +4.74 \text{ in of } H_2O$$

$$CU^- = -2.28\ (98.0)$$

$$CU^- = -2.23 \text{ in of } H_2O$$

Converting the above from "in of $H_2O$" to "% level narrow range (NR)" given that SG level is 0-100%, CU becomes,

$$CU^+ = +4.74 \text{ in of } H_2O \frac{(100\%\ LVL\ NR)}{98.0\ in\ of\ H_2O}$$

$$CU^+ = +4.84\% \text{ level NR}$$

$$CU^- = -2.23 \text{ in of } H_2O \frac{(100\%\ LVL\ NR)}{98.0\ in\ of\ H_2O}$$

$$CU^- = -2.28\% \text{ level NR}$$

## 8.0 OBTAIN ANALYTICAL LIMIT (AL)

The analytical limit used in the safety analyses for SG Lo-Lo actuation of Aux FW and Rx Trip occurs at 0% level.

Therefore,

AL = 0% level narrow range (NR) (ref. 3.2.15 & 3.3.3)

9.0 DETERMINE SETPOINT (TS)

The nominal trip setpoint can be calculated from the following equation:

$$TS = AL \pm (CU + Margin) \qquad \text{(ref. 3.1.3)}$$

From assumption 2.5, Margin = 0

For a decreasing parameter (SG Lo-Lo Level), only the positive component of CU is used to determine the Trip Setpoint (TS) because it serves to delay initiation of SG Lo-Lo trip. The negative component of CU ($CU^-$ = -2.28% LVL NR) only serves to expedite the initiation of SG Lo-Lo Trip. CU negative is a credit to a decreasing parameter.

Therefore, from Section 7.6, the CU for SG Lo-Lo level actuation of Aux FW and RX Trip signal is + 4.84% of SG narrow range level.

Solving for the trip setpoint including uncertainty plus margin equals:

$$TS = 0 + (4.84) + 0$$

$$TS = 4.84\% \text{ level NR}$$

10.0 DETERMINE ALLOWABLE VALUE (AV)

The Allowable Value (AV) can be calculated from the following equation (method 3 of ref 3.1.3).

$$AV = TS \pm CU_{CAL}$$

Where, TS = Trip Setpoint

$CU_{CAL}$ = Channel Uncertainty (CU) as seen during calibration. Therefore, uncertainties due to a harsh environment, process measurement, or primary element are not considered. For conservatism, only RA, DR, and MTE uncertainties are considered.

The AV will be calculated using the Square-Root-Sum-of-the-Squares (SRSS) method which is consistent with the method used for the determination of the trip setpoint. Therefore, a check calculation is not required. (ref. 3.1.3)

10.1 Determine $CU_{CAL}$

From Section 7.3,

$$e_1 = \pm\sqrt{RA_1^2 + DR_1^2 + TE_1^2 + RE_1^2 + SE_1^2 + HE_1^2 + SP_1^2 + PS_1^2 + MTE_1^2} \pm B_1$$

As defined above, $CU_{CAL}$ only considers the normal uncertainties as seen during calibration, therefore the module uncertainty equation $e_1$ reduces to:

$$e_{1CAL} = \pm\sqrt{RA_1^2 + DR_1^2 + MTE_1^2}$$

The $e_1$ effects for RA, DR, and MTE from section 7.3 are substituted in the above equation:

Therefore,

$$e_{1CAL} = \pm\sqrt{.5^2 + .38^2 + .72^2}$$

$$e_{1CAL} = \pm .95\% \text{ of span}$$

Similarly for $e_2$ and using values from section 7.4, the uncertainty associated with $e_2$ calibration is:

$$e_{2CAL} = \pm\sqrt{.5^2 + .2^2 + .71^2}$$

$$e_{2CAL} = \pm .89\% \text{ of span}$$

Given the above $CU_{CAL}$ definition, the channel uncertainty equation from Section 7.6 reduces to:

$$CU_{CAL} = \pm\sqrt{e_{1CAL}^2 + e_{2CAL}^2}$$

Therefore,

$$CU_{CAL} = \pm\sqrt{.95^2 + .89^2}$$

$$CU_{CAL} = \pm 1.30\% \text{ of span}$$

Converting "% of span" to "% level NR"

$$CU_{CAL} = \pm 1.30\% \ (98.0 \ in \ of \ H_2O)$$

$$= \pm 1.27 \ in \ of \ H_2O$$

$$= \pm 1.27 \ in \ of \ H_2O \left( \frac{100\% \ LVL \ NR}{98 \ in \ of \ H_2O} \right)$$

$$= \pm 1.30\% \ LVL \ NR$$

10.2 Allowable Value (AV) Calculation

Calculating AV for SG Lo-Lo level

given,

TS = 4.84% LVL NR (Section 9.0)

$CU_{CAL}$ = ± 1.30% LVL NR

The magnitude of $CU_{CAL}$ is combined with the Trip Setpoint in an appropriate direction to determine AV for a decreasing parameter. Therefore,

AV = TS - $CU_{CAL}$

AV = 4.84 - 1.30

AV = 3.54% LVL NR

## 11.0 SUMMARY

A comparison between the existing Trip Setpoint and the calculated Trip setpoint for the Steam Generator Lo-Lo level actuation of auxiliary feedwater and reactor trip is presented below. The evaluations are representative of the ISA-S67.04 (ref. 3.1.3) format.

### 11.1 Steam Generator Lo-Lo Level Trip evaluation

| | | CALCULATED | EXISTING |
|---|---|---|---|
| Trip Setpoint | (TS) | 4.84% LVL NR(sec. 9.0) | 7.84% LVL NR(ref. 3.5.5) |
| Tech Spec Trip Setting Limit | | | ≥5.0% LVL NR(ref. 3.3.4) |
| Allowable Value | (AV) | 3.54% LVL NR(sec.10.2) | |
| Analytical Limit | (AL) | 0% LVL NR(ref. 3.3.3) | 0% LVL NR(ref.3.3.3) |

NOTES:

1. The calculated Allowable Value (AV) represents the limiting "as-found" condition for the instrument loop.
2. The SG normal operating range is 40% to 50% level NR.

(Ref. 3.2.10 and 3.2.13)

### 11.2 Conclusion:

The existing Trip Setpoint for SG Lo-Lo actuation of Aux FW and Rx Trip is set higher than is required by the total channel uncertainty, therefore, it is conservative. No setpoint change is required.

For SG Lo-Lo Level trip, sufficient margin exists for the existing trip setpoint to insure that channel trip occurs within the Analytical Limit (AL) considering additional drift and uncertainties for the 24 month ±25% operating cycle.

## 12.0 ATTACHMENTS

I. Channel Uncertainty Equations

II. Insulation Resistance Effect Uncertainty Equations (Transmitter)

| | | |
|---|---|---|
| CALC NO. IP3-CALC-ESS-00263 | REV. 0 | PROJECT IP3 |
| REFERENCE IES-3, Rev. 0, Instrument Loop Accuracy and Setpoint Calculations | | |

## 1.0 Total Channel Uncertainty (CU)

The calculation of an instrument channel uncertainty can be performed with a single loop equation containing all potential uncertainty values, or by a series of related term equations. A specific channel calculation coincides with a channel's layout from process measurement to final output module or modules.

The typical linear channel uncertainty calculation has the following form:

$$CU^{+} = +\sqrt{PM^2 + PE^2 + IRE^2 + (Module_1)^2 + (Module_2)^2 + \ldots (Module_n)^2} + B^{+}$$

$$CU^{-} = -\sqrt{PM^2 + PE^2 + IRE^2 + (Module_1)^2 + (Module_2)^2 + \ldots (Module_n)^2} - B^{-}$$

Where:

CU = Channel Uncertainty (CU) at a specific point in the channel: the CU can be calculated for any point in a channel from Module 1 to Module n, as needed.

PM = Random uncertainties that exist in the channel's basic Process Measurement (PM).

PE = Random uncertainties that exist in a channel's Primary Element (PE), if it has one, such as the accuracy of a flowmeter table.

IRE = Insulation resistance effect, leakage allowance in % of span.

MODULE 1, 2, n = Total random uncertainty of each module that makes up the loop from Module 1 through Module n.

$B^{+}$ = The total of all positive biases associated with a channel; this would include any uncertainties from PM, PE, or the Modules that could not be combined as a random term (biases, arbitrarily - distributed uncertainties, and random bias).

$B^{-}$ = The total of all negative biases associated with a channel.

| | | |
|---|---|---|
| CALC NO. IP3-CALC-ESS-00263 | REV. 0 | PROJECT IP3 |
| REFERENCE IES-3, Rev. 0, Instrument Loop Accuracy and Setpoint Calculations | | |

## 2.0 Module ($e_n$) Uncertainties

The individual module random uncertainties are in themselves a statistical combination of uncertainties. Depending on the type of module, its location, and the specific factors that can affect its accuracy, the determination of the module uncertainty will vary. For example, the module uncertainty for a module may be calculated as:

$$e^+ = +\sqrt{RA^2 + DR^2 + TE^2 + RE^2 + SE^2 + HE^2 + SP^2 + PS^2 + MTE^2} + B^+$$

$$e^- = -\sqrt{RA^2 + DR^2 + TE^2 + RE^2 + SE^2 + HE^2 + SP^2 + PS^2 + MTE^2} - B^-$$

Where:

e - Uncertainty of module,

RA - Module Reference Accuracy specified by the manufacturer,

DR - Drift of the module over a specific period,

TE - Temperature Effect for the module; the effect of ambient temperature variations on module accuracy; the TE may be a normal operating TE, or an accident TE, as required,

RE - Radiation Effect for the module; the effect of radiation exposure on module accuracy; the RE may be a normal operating RE, an accident RE, or time of trip RE as required,

SE - Seismic Effect or vibration effect for the module; the effect of seismic or operational vibration on the module accuracy,

HE - Humidity Effect for the module; the effect of changes in ambient humidity on module accuracy, if any,

SP - Static Pressure effects for the module; the effect of changes in process static pressure on module accuracy,

MTE - Measuring and Test Equipment effect for the module; this accounts for the uncertainties in the equipment utilized for calibration of the module,

PS - Power Supply effect,

B - Biases associated with the module, if any.

ATTACHMENT II
**INSULATION RESISTANCE EFFECT**
**UNCERTAINTY EQUATIONS (TRANSMITTER)**

| | | |
|---|---|---|
| CALC NO. IP3-CALC-ESS-00263 | REV. 0 | PROJECT IP3 |
| REFERENCE IES-3, Rev. 0, Instrument Loop Accuracy and Setpoint Calculations | | |

## 1.0 Insulation Resistance Effect (IRE) Uncertainty

The following equations will be used to determine the leakage allowance for transmitter loops.

### 1.1 Determine Insulation Resistance ($R_{ci}$)

The insulation resistance (IR) of the installed cable must be determined using the following equation:

$$R_{ci} = R_{ct} \times L_t/L_i$$

Where:

$R_{ci}$ - IR of Installed Cable

$R_{ct}$ - Lowest Measured IR during Environmental Qualification Testing of Cable

$L_t$ - Length of Test Cable

$L_i$ - Length of Installed Cable

### 1.2 Determine Shunt Resistance ($R_{sh1}$)

The shunt resistance ($R_{sh1}$) of the loop components exposed to the harsh environment is determined by the mathematical combination of their resistance, in parallel. An equation to perform this is:

$$R_{sh_1} = \frac{R_{ci} \times R_{tb} \times R_{sp}}{(R_{ci} + R_{tb})R_{sp} + (R_{ci} \times R_{tb})}$$

Where:

$R_{ci}$ - IR of Installed Cable (See Above)

$R_{tb}$ - Lowest Measured IR during Environmental Qualification Testing of the Applicable Terminal Block

$R_{sp}$ - Lowest Measured IR during Environmental Qualification Testing of the Applicable Splice.

| | | |
|---|---|---|
| CALC NO. IP3-CALC-ESS-00263 | REV. 0 | PROJECT IP3 |
| REFERENCE IES-3, Rev. 0, Instrument Loop Accuracy and Setpoint Calculations | | |

1.0 Insulation Resistance Effect (IRE) Uncertainty (Continued)

1.3 Determine Loop Shunt Resistance ($R_{sh_2}$)

The following equation is used for calculating the shunt resistance ($R_{sh_1}$) in parallel to the penetration resistance ($R_{pen}$) to obtain the loop shunt resistance ($R_{sh_2}$).

$$R_{sh_2} = \frac{R_{sh_1} \times R_{pen}}{R_{sh_1} + R_{pen}}$$

Where,

$R_{pen}$ = Lowest measured IR during Environmental Qualification Testing of the Applicable Penetration

1.4 Determine Insulation Resistance (IRE)

Calculate the insulation resistance effect, (IRE) leakage allowance in % of span of the subject loop using:

$$IRE = \frac{V_s - R_e I_t}{(R_{sh_2} + R_e)\, X_s} \times 100$$

Where:

$V_s$ - Maximum Source Voltage for Transmitter Loop

$R_e$ - Loop Resistance

$I_t$ - Minimum Transmitter Current

$X_s$ - Transmitter Span

$R_{sh_2}$ - Calculated Shunt Resistance of Loop

IRE - Insulation Resistance Effect Leakage Allowance for Transmitter Loop Expressed in % of Transmitter Span.

IP3 [X]

JAF [ ]

# INDEPENDENT DESIGN VERIFICATION CONTROL SHEET

VERIFICATION OF: IP3-CALC-ESS-00263/Setpoint Calc for SG Low-Low Level: AFW & Rx Trip
Document Title/Number

SUBJECT: 24 Month Operating Cycle - ESF Actuation Setting

MOD/TASK NUMBER (If Applicable): _____

QA CATEGORY: Cat I

| DISCIPLINE REVIEW: | ELEC | MECH | C/S | I&C | OTHER (SPECIFY) O & M |
|---|---|---|---|---|---|
| Check as required | [ ] | [ ] | [ ] | [ ] | [X] |

| | | | | | | |
|---|---|---|---|---|---|---|
| METHOD USED *: | DR | | | | | |
| VERIFIER'S NAME: | W. Wittich | | | | | |
| VERIFIER'S INITIALS/DATE: | [signature] 7/6/92 | | | | | |
| APPROVED BY: | [signature] | | | | Date: 7/6/92 | |

REMARKS/SCOPE OF VERIFICATION:

Verification completed in accordance with Attachment 4.3 of DCM 4, Rev. 7

Calculation is clear and technically understandable. The assumptions, approach, and technique are in accordance with industry practice. The results are valid and reasonable.

In addition to an overall evaluation of the calibration, independent verification compared the results of this calculation to results from similar plants. The total calculated channel uncertainty of 4.6% of SG narrow range level is lower than the total channel allowance documented for other plants. Both the Seabrook and the

* Methods of verification: Design Review (DR), Alternate Calculations (AC), Qualification Test (QT)

IP3 [X]

JAF [ ]

**INDEPENDENT DESIGN VERIFICATION**
**CONTROL SHEET**

Westinghouse Standard Technical Specifications document a total channel allowance with margin of 15 and 28% of span; however, the Turkey Point Tech Specs show a total allowance of 5% of span. The large difference between the IP3/Turkey Point and the newer plants is attributed to environmental effects from FWLB inside containment.