Examination Program Plan
for
New York Power Company
Indian Point Unit No.3
1st Outage; 2nd Period; 2nd Interval
1990

This document details the proposed planned scope of examination by Westinghouse NSD - Inspection Service for the 1st Outage, 2nd Period, 2nd Interval, including items and areas selected for examination, examination and documentation procedures and sketches containing identifications of all areas to be examined.

Qualification of examiners, materials and equipment will be available on site prior to the start of examinations.

Efforts should be made to provide access to all planned examinations, however, due to circumstances such as environment, access, radiation levels, etc., some variations may occur.

This program and the procedures incorporated herein require approval of New York Power Company and the Authorized Inspector prior to the start of examination.

Prepared by: Westinghouse Electric Corporation

W Approval: Phillip C. Bukes — Site Coordinator — 8-1-90 Date

New York Power Company Approval: [signature] — 8/17/90 Date

Title: SITE NDE LEVEL III

Authorized Inspector Review: [signature] — 8/29/90 Date

Agency: H.S.B. I & I Co. HARTFORD, CT.

ID:0585b/81589:50-1

9103210290 910315
PDR ADOCK 05000286
Q PDR

NEW YORK POWER AUTHORITY
INDIAN POINT UNIT NO. 3
1ST OUTAGE; 2ND PERIOD; 2ND INTERVAL
INSERVICE EXAMINATION PROGRAM
1990

All items listed below were examined, as indicated, in accordance with the requirements of the ASME Boiler and Pressure Vessel Code Section XI-1983 Edition up to and including Summer 1983 Addenda, NRC Regulatory Guide 1.14 and Plant Technical Specification to the extent practical with the access provided and the limitations of component geometry.

Program Item	IWB-2500-1 Reference	Area and Extent of Examination	Examination Procedure Vol.	Surf.	Vis	Sketch Reference
		Reactor Vessel				
1.	B1.22	Closure Head Meridional Weld 3-0" to 26" from 0 Reference (adjacent Weld 1)	47	--	--	1-1300
2.	B1.22	Closure Head Meridional Weld 4-0" to 26" from 0 Reference (adjacent Weld 1)	47	--	--	1-1300
3.	B1.40	Closure Head to Flange Weld 1-Centerline of Stud Hole 18 Clockwise to centerline of Stud Hole 36	47	70	--	1-1300
4.	B6.10	Closure Head Nuts-19 thru 36	--	70	--	1-1400
5.	B6.30	Closure Head Studs - 19 thru 36	--	70	--	1-1400
6.	B6.50	Closure Head Washers - 19 thru 36	--	--	8	1-1400
7.	B7.80	Conoseal Bolting - Assembly #75 and #76	--	--	8	1-1300
8.	B13.10	Reactor Vessel Internals	--	--	88	1-1200
9.	B15.10	Pressure Retaining Boundary	--	--	(1)	(1)
		Pressurizer				
10.	B2.11	Circumferential Weld 1-100" clockwise to 200" from 0 reference (adjacent weld 2)	47	--	--	1-2100
11.	B2.11	Circumferential Weld 17	--	--	(2)	(2)

Program Item	IWB-2500-1 Reference	Area and Extent of Examination	Examination Procedure Vol.	Surf.	Vis	Sketch Reference
		Pressurizer (Cont'd)				
12.	B2.12	Longitudinal Weld 2 - 24" to 28" from 0 reference (adjacent weld 1)	47	--	--	1-2100
13.	B2.12	Longitudinal Weld 16	--	--	(2)	(2)
14.	B3.120	Nozzle Inside Radius Section - 20IR, 21IR, 22IR, 23IR, 24IR and 25IR	--	--	(2)	(2)
15.	B5.40	6" Pressurizer Safety Nozzle to Safe End Butt Weld - 1(DM)	206	11	--	1-4501
16.	B5.40	6" Pressurizer Safety Nozzle to Safe End Butt Weld - 1(DM)	206	11	--	1-4503
17.	B7.20	Manway Bolting -B6 thru B10	--	--	8	1-2100
18.	B8.20	Pressurizer Skirt Integrally Welded Attachment 18-100" clockwise to 200" from 0 reference (adjacent weld 19)	206	--	--	1-2100
19.	B8.20	Pressurizer Skirt Integrally Welded Attachment -19 (10" to 20" from 0 Reference (adjacent Weld 18)	206	--	--	1-2100
20.	B15.20	Pressure Retaining Boundary	--	--	(1)	(1)
		Replacement Steam Generator 31				
21.	B2.40	Channel head to Tubesheet Weld 31-1-0" Clockwise to 135" from 0 Reference	47	--	--	1-3101
22	B3.140	Primary Nozzle Inside Radius Section 31-1A and 31-1B	248	--	--	1-3101
23.	B5.70	Nozzle to Safe End Butt Welds 5(DM) and 6(DM)	206	11	--	1-4100
24.	B7.30	Hotleg and Coldleg Manway Studs- 32 Studs, 32 Nuts and 64 Washers	--	--	8	1-3101

Program Item	IWB-2500-1 Reference	Area and Extent of Examination	Examination Procedure Vol.	Surf.	Vis	Sketch Reference
		Replacement Steam Generator 31 (Cont'd)				
25.	B15.30	Pressure Retaining Boundary	--	--	(1)	(1)
		Replacement Steam Generator 32				
26.	B5.70	Nozzle to Safe End Butt Weld 5(DM)	206	11	--	1-4200
27.	B7.30	Coldleg Manway Studs-16 Studs, 16 Nuts and 32 Washers	--	--	8	1-3101
28.	B15.30	Pressure Retaining Boundary	--	--	(1)	(1)
		Replacement Steam Generator 33				
29.	B15.30	Pressure Retaining Boundary	--	--	(1)	(1)
		Replacement Steam Generator 34				
30.	B15.30	Pressure Retaining Boundary	--	--	(1)	(1)
		Pressure Retaining Bolting				
31.	B7.50	Loop 32 1 1/2" Seal Injection Flange A - 4 Studs and 8 Nuts	--	--	8	1-4208
		Circumferential Pipe Welds				
32.	B9.11	Loop 33 Reactor Coolant Pipe-7	206	11	--	1-4300
33.	B9.11	Loop 33 Reactor Coolant Pipe-10	206	11	--	1-4300
34.	B9.11	Loop 34 Reactor Coolant Pipe-13	206	11	--	1-4400
35.	B9.11	14" Pressurizer Surge - 3	206	11	--	1-4500
36.	B9.11	Loop 33 10" Accumulator Discharge - 5, 6 and 8	206	11	--	1-4301
37.	B9.11	Loop 34 10" Accumulator Discharge - 3 and 4	206	11	--	1-4401
38.	B9.11	Loop 33 6" RHR-1	206	11	--	1-4301
39.	B9.11	Loop 34 6" RHR-1	206	11	--	1-4401

Program Item	IWB-2500-1 Reference	Area and Extent of Examination	Examination Procedure Vol.	Surf.	Vis	Sketch Reference
		Circumferential Pipe Welds				
40.	B9.11	6" Pressurizer Safety - 4 and 5	206	11	--	1-4501
41.	B9.11	6" Pressurizer Safety - 2 and 3	206	11	--	1-4503
42.	B9.21	3" Pressurizer Spray-7, 8, 19 20 and 21	--	11	--	1-4506
43.	B9.21	3" Pressurizer Spray-11, 12 and 13	--	11	--	1-4507
44.	-	2" Auxiliary Spray - Base Metal between Welds 27 and 28	206(4)	--	--	1-4508
		Branch Pipe Connections				
45.	B9.31	Loop 34 10" Accumulator Discharge 13 (BC)	206	11	--	1-4401
46.	B9.32	Loop 33 3" RTD - 12(BC)	--	11	--	1-4303
47.	B9.32	Loop 34 3" RTD - 12 (BC)	--	11	--	1-4403
		Socket Welds				
48.	B9.40	Loop 33 2" SIS Hotleg-20, 21, 22, 23, 24, 25, 26, 27, 28 and 29	--	11	--	1-4302
49.	B9.40	Loop 33 2" & 1 1/2" SIS Coldleg - 1, 2, 3, 4, 5, 6, 7, 8, 32, 33 and 34	--	11	--	1-4306
50.	B9.40	Loop 34 2" & 1 1/2" SIS Coldleg- 1, 2, 3, 4, 5 and 6	--	11	--	1-4406
		Integrally Welded Attachments				
51.	B10.10	14" Pressurizer Surge-PWR-120 & PWR-121	--	11	--	1-4500
		Piping				
52.	B15.50	Pressure Retaining Boundary	--	--	(1)	(1)

Program Item	IWB-2500-1 Reference	Area and Extent of Examination	Examination Procedure Vol.	Surf.	Vis	Sketch Reference
		Reactor Coolant Pump 31				
53.	B15.60	Pressure Retaining Boundary	--	--	(1)	(1)
		Reactor Coolant Pump 32				
54.	B7.60	No. 1 Seal Housing Bolts - 32-B1 thru 32-B18	--	--	8	1-5100
55.	B10.20	Integrally Welded Attachment - 32-1SC, 32-2SC and 32-3SC	--	11	--	1-5100
56.	B15.60	Pressure Retaining Boundary	--	--	(1)	(1)
57.	--	Flywheel - Pump Motor Flywheel 32	41	--	--	1-5100
		Reactor Coolant Pump 33 and 34				
58.	B15.60	Pressure Retaining Boundary	--	--	(1)	(1)
		Valve Bonnet Bolting				
59.	B7.70	14" - 731- 16 Studs and 16 Nuts	--	--	8	1-4201
60.	B7.70	10" - 895C-16 Studs and 16 Nuts	--	--	8	1-4301
61.	B7.70	10" - 897C-16 Studs and 16 Nuts	--	--	8	1-4301
62.	B7.70	10" - 895D-16 Studs and 16 Nuts	--	--	8	1-4401
63.	B7.70	10" - 897D - 16 Studs and 16 Nuts	--	--	8	1-4401
64.	B7.70	6" - 838C-12 Studs and 12 Nuts	--	--	8	1-4301
65.	B7.70	6" - 838D-12 Studs and 12 Nuts	--	--	8	1-4401
66.	B7.70	3" - PCV456-6 Studs and 6 Nuts	--	--	8	1-4505
67.	B7.70	3" - PCV455A - 6 Studs and 6 Nuts	--	--	8	1-4506
68.	B7.70	3" - PCV455B-6 Studs and 6 Nuts	--	--	8	1-4507

Program Item	IWB-2500-1 Reference	Area and Extent of Examination	Examination Procedure Vol.	Surf.	Vis	Sketch Reference
		Valves				
69.	B12.50	6" - 838D - Interior Surface	--	--	8	1-4401
70.	B15.70	Pressure Retaining Boundary	--	--	(1)	(1)

Program Item	IWC-2500-1 Reference	Area and Extent of Examination	Examination Procedure Vol.	Surf.	Vis	Sketch Reference
		Replacement Steam Generator 31				
71.	C1.10	Circumferential Shell Weld 31-3 100%	47	--	--	2-1101
72.	C1.30	Tubesheet to Shell Weld 31-2-0" Clockwise to 135" from 0 Reference	47	--	--	2-1101
		Residual Heat Exchanger 31				
73.	C1.10	Shell Circumferential Weld 31-2-37" clockwise to 74" from 0 Reference	206	--	--	2-1120
74.	C1.20	Head Circumferential Weld 31-1-37" clockwise to 74" from 0 Reference	206	--	--	2-1120
		Seal Water Heat Exchanger				
75.	C1.10	Shell Circumferential Weld 2-17" Clockwise to 34" from 0 Reference	(3)	11	--	2-1130
76.	C1.20	Head Circumferential Weld 1-17" Clockwise to 34" from 0 Reference	(3)	11	--	2-1130
		Non-Regenerative Letdown Heat Exchanger				
77.	C1.10	Shell Circumferential Weld 2-24" Clockwise to 48" from 0 Reference	206	--	--	2-1140
78.	C1.20	Head Circumferential Weld 1-24" Clockwise to 48" from 0 Reference	206	--	--	2-1140

Program Item	IWC-2500-1 Reference	Area and Extent of Examination	Examination Procedure Vol.	Surf.	Vis	Sketch Reference
		Excess Letdown Heat Exchanger				
79.	C1.10	Shell Circumferential Weld 2-10" Clockwise to 20" from 0 Reference	206	--	--	2-1150
80.	C1.20	Head Circumferential Weld 1-10" Clockwise to 20" from 0 Reference	206	--	--	2-1150
		Volume Control Tank				
81.	C1.20	Head Circumferential Welds 1 & 2-100" Clockwise to 200" from 0 Reference	206	--	--	2-1200
		Accumulator Tank 32				
82.	C1.10	Shell Circumferential Weld 32-3-126" Clockwise to 252" from 0 Reference	47	--	--	2-1210
83.	C1.20	Head Circumferential Welds 32-1 and 32-4-126" Clockwise to 252" from 0 Reference	47	--	--	2-1210
		Seal Water Injection Filter 31				
84.	C1.10	Shell Circumferential Weld 31-2-12" Clockwise to 24" from 0 Reference	206	--	--	2-1300
85.	C1.20	Head Circumferential Weld 31-1-12" Clockwise to 24" from 0 Reference	206	--	--	2-1300
		Reactor Coolant Filter				
86.	C1.10	Shell Circumferential Weld 2-15" Clockwise to 30" from 0 Reference	206	--	--	2-1310
87.	C1.20	Head Circumferential Welds 1 and 3- 15" Clockwise to 30" from 0 Reference	206	--	--	2-1310

Program Item	IWC-2500-1 Reference	Area and Extent of Examination	Examination Procedure Vol.	Surf.	Vis	Sketch Reference
		Seal Water Return Filter				
88.	C1.10	Shell Circumferential Weld 2-17" Clockwise to 34" from 0 Reference	(3)	11	--	2-1320
89.	C1.20	Head Circumferential Welds 1 and 3 - 17" Clockwise to 34" from 0 Reference	(3)	11	--	2-1320
		Integrally Welded Attachments				
90.	C3.20	Loop 31 28" Mainsteam -HMS-1	--	70	--	2-2100
91.	C3.20	Loop 31 28" Mainsteam - MSR-2, MSR-4, MSR-11, MSR-13, MSR-16, MSR-17 and MSR-29	--	70	--	2-2101
92.	C3.20	Loop 31 18"Feedwater - HBF-1, PWR-534, PWR-536 and BFD-H-46	--	70	--	2-2102
93.	C3.20	Loop 32 28" Mainsteam -HMS-2	--	70	--	2-2200
94.	C3.20	Loop 32 18" Feedwater - HBF-2 and PWR-537	--	70	--	2-2202
95.	C3.20	10" Accumulator Discharge-PWR-144A	--	11	--	2-2521
		Circumferential Welds				
96.	C5.11	14" RHR-33, 34, 35, 44 and 45	--	11	--	2-2500
97.	C5.11	12" RHR-28	--	11	--	2-2500
98.	C5.11	12" RHR-22, 24, and 25	--	11	--	2-2511
99.	C5.11	12" RHR-31 and 32	--	11	--	2-2512
100.	C5.11	8" RHR-10	--	11	--	2-2512
101.	C5.11	10" RHR-17 and 18	--	11	--	2-2520
102.	C5.11	10" Accumulator Discharge-4,5&6	--	11	--	2-2521

Program Item	IWC-2500-1 Reference	Area and Extent of Examination	Examination Procedure Vol.	Surf.	Vis	Sketch Reference
		Circumferential Welds (Cont'd)				
103.	C5.11	8" RHR-27, 28 and 29	--	11	--	2-2530
104.	C5.11	6" RHR-16 and 20	--	11	--	2-2530
105.	C5.11	6" SIS-14, 15, 16, 30 and 31	--	11	--	2-2540
106.	C5.11	6" RHR-1,2,3,4,5,6,7,8,9,10, 11,12,13,14,15,16,17,18,19, 20,21, and 23	--	11(5)	--	2-2544
		Longitudinal Welds				
107.	C5.12	12" RHR-64LS	--	11	--	2-2500
108.	C5.12	12" RHR-34LS and 35LS	--	11	--	2-2511
		Circumferential Welds				
109.	C5.21	Loop 33 28" Mainsteam - 9 & 10	206	70	--	2-2300
110.	C5.21	Loop 31 18" Feedwater 10 and 11	206	70	--	2-2102
111.	C5.21	Loop 34 12" Mainsteam - 4 and 7	206	70	--	2-2401
112.	C5.21	10" Accumulator Discharge-14(DM)	206	11	--	2-2522
113	C5.21	10" Accumulator Discharge-5 & 8	206	11	--	2-2523
114.	C5.21	Loop 34 8" Mainsteam-5 & 8	206	70	--	2-2401
115.	C5.21	8" RHR-18 and 19	206	11	--	2-2531
116.	C5.21	8" RHR-8, 9, 10 and 11	206	11	--	2-2532
117.	C5.21	8" RHR-6, 7 and 9	206	11	--	2-2533
118.	C5.21	6" RHR-24, 25, 26 and 27	206	11	--	2-2542
		Longitudinal Welds				
119.	C5.22	Loop 33 28" Mainsteam-18LS	206	70	--	2-2300
120.	C5.22	10" Accumulator Discharge-17LS and 18LS	206	11	--	2-2522

Program Item	IWC-2500-1 Reference	Area and Extent of Examination	Examination Procedure Vol.	Surf.	Vis	Sketch Reference
		Branch Pipe Connections				
121.	C5.31	Loop 34-12" Mainsteam-3(BC) and 6(BC)	--	70	--	2-2401
122.	C5.31	6" RHR-22 (BC)	--	11(5)	--	2-2544
		Piping				
123.	C7.30	Pressure Retaining Components	--	--	(1)	(1)

Program Item	IWD-2500-1 Reference	Area and Extent of Examination	Examination Procedure Vol.	Surf.	Vis	Sketch Reference
		Class 3 Integrally Welded Attachments				
124.	D1.20	Safety Injection Pump SIAPS12-32 Oil Coolers (2)	--	--	8	3-1520
125.	D2.20	Residual Heat Exchangers 31 ACAHRS1-31 and ACAHRS2-32	--	--	8	3-1100
126.	D2.20	Excess Letdown Heat Exchanger CSAHEL1-31	--	--	8	3-1150
127.	D2.20	Reactor Coolant Pump RCPCPC3-33 Lube Oil Cooler	--	--	8	3-1170
128.	D2.20	Reactor Coolant Pump RCPCPC4-34 Lube Oil Cooler	--	--	8	3-1170
129.	D2.20	Cooling Water Heat Exchanger 31	--	--	8	3-1180
130.	D2.20	Cooling Water Heat Exchanger 32	--	--	8	3-1180
131.	D2.20	10" Service Water Line 1221-SWN-A-199	--	--	8	3-3402
132.	D2.20	10" Service Water Line 1222-SWN-A-197	--	--	8	3-3403
133.	D2.20	24" Service Water Line 405-SWN-A-561	--	--	8	3-3407

Program Item	IWD-2500-1 Reference	Area and Extent of Examination	Examination Procedure Vol.	Surf.	Vis	Sketch Reference
		Class 3 Integrally Welded Attachments (Cont'd)				
134.	D2.20	Component Cooling Pump ACAPCC1-31	--	--	8	3-4130
135.	D2.20	Component Cooling Pump ACAPCC2-32	--	--	8	3-4130
136.	D2.20	Component Cooling Pump ACAPCC3-33	--	--	8	3-4130
137.	D3.20	10" Spent Fuel Pit Cooling Water Line 329-AC-HR-329-9	--	--	8	3-3601

Program Item	IWF-2500-1 Reference	Area and Extent of Examination	Examination Procedure Vol.	Surf.	Vis	Sketch Reference
		Supports and Hangers				
138.	F1.30	Pressurizer Skirt Integrally Welded Attachment - 18 (From 100" Clockwise to 200")	--	--	8	1-2100
139.	F3.10-F3.50	Loop 33 10" Accumulator Discharge-PWR-4, PWR-134, PWR-146A, PWR-146B, SI-H-353-3, PWR-147B, SI-R-353-4 and SI-H-353-5	--	--	8	1-4301
140.	F3.10-F3.50	Loop 33 6" RHR-SI-H-213	--	--	8	1-4301
141.	F3.10-F3.50	Loop 33 2" SIS Hotleg-PWR-1, SI-H-56-20, SI-H-56-22, SI-H&R-56-18, SI-H&R-56-19, SI-H&R-56-21 and SI-H&R-56-23	--	--	8	1-4302
142.	F3.10-F3.50	Loop 33 2" & 1.5" SIS Coldleg RC-H-754-11, RC-H-754-15, RC-H-754-16, RC-R-754-10, RC-H&R-754-9, RC-H&R-754-12, RC-H&R-754-13, RC-H&R-754-14 and RC-R-754-14A	--	--	8	1-4306

Program Item	IWF-2500-1 Reference	Area and Extent of Examination	Examination Procedure Vol.	Surf.	Vis	Sketch Reference
		Supports and Hangers (Cont'd)				
143.	F3.10-F3.50	Loop 34 10" Accumulator Discharge- PWR-4A, PWR-6, SI-H-350-4 and SI-H&R-350-3	--	--	8	1-4401
144.	F3.10-F3.50	Loop 34 1.5" SIS Coldleg SI-R-16-25 and SI-H&R-16-24	--	--	8	1-4406
145.	F3.10-F3.50	3" Pressurizer Spray-PWR-97, PWR-98A, RC-R-25, RC-H-62-1, RC-H-62-2A, RC-H&R-62-2 and RC-H&R-62-3	--	--	8	1-4506
146.	F3.10-F3.50	Loop 31 Reactor Coolant Pump-31-1SC, 31-2SC and 31-3SC	--	--	8	1-5100
147.	F3.10-F3.50	Loop 32 Reactor Coolant Pump-32-1SC, 32-2SC and 32-3SC	--	--	8	1-5100
148.	F3.10-F3.50	Regenerative Heat Exchanger-CSAHRG1-31	--	--	8	2-1110
149.	F3.10-F3.50	Volume Control Tank-1WS, 2WS, 3WS & 4WS	--	--	8	2-1200
150.	F1.30	Accumulator Tank 33-1WS	--	--	8	2-1210
151.	F3.10-F3.50	Seal Water Injection Filter 31 31-1WS, 31-2WS and 31-3WS	--	--	8	2-1300
152.	F3.10-F3.50	Reactor Coolant Filter CSFLRC1-31-1WS, 2WS, 3WS and 4WS	--	--	8	2-1310
153.	F3.10-F3.50	Seal Water Return Filter-CSFLSW1-31-1WS, 2WS, 3WS and 4WS	--	--	8	2-1320
154.	F3.10-F3.50	Loop 31 28" Mainsteam-HMS-1, PWR-237, PWR-256, and PWR-257	--	--	8	2-2100
155.	F3.10-F3.50	Loop 32 28" Mainsteam-HMS-2, HMS-17, PWR-235, PWR-238, and PWR-239	--	--	8	2-2200

Program Item	IWF-2500-1 Reference	Area and Extent of Examination	Examination Procedure Vol.	Surf.	Vis	Sketch Reference
		Supports and Hangers (Cont'd)				
156.	F3.10-F3.50	Loop 32 28" & 6" Mainsteam-MSR-7, MSR-8, MSR-12, MSR-18, MSR-22, MSR-30, MS-H-355, MS-H-356, MS-R-1-1 and MS-A1018-1	--	--	8	2-2201
157.	F3.10-F3.50	Loop 32 18" Feedwater-HBF-2, PWR-247, PWR-252, PWR-253, PWR-254, PWR-255, PWR-537 and BFD-H-5-2	--	--	8	2-2202
158.	F3.10-F3.50	Loop 33 28" Mainsteam-HMS-18, PWR-241, PWR-244, PWR-245, and MS-R-100	--	--	8	2-2300
159.	F3.10-F3.50	Loop 33 28" Mainsteam-MSR-9	--	--	8	2-2301
160.	F3.10-F3.50	Loop 34 28" Mainsteam-MSR-6 and MS-H-367	--	--	8	2-2401
161.	F3.10-F3.50	14" & 12" RHR-MS-10-15-AC-H-57, AC-H10-18C and AC-H653-1A	--	--	8	2-2500
162.	F3.10-F3.50	12" & 8" RHR-AC-H-214, AC-H-215, AC-H-9-1, AC-R-215, AC-R-216, AC-R-221 and AC-R-9-2	--	--	8	2-2512
163.	F3.10-F3.50	10" RHR-SI-H293-4	--	--	8	2-2520
164.	F3.10-F3.50	10" Accumulator Discharge-PWR-130, PWR-131, PWR-132, PWR-133, PWR-134, PWR-135, PWR-136, PWR-137, PWR-138, PWR-139, PWR-140, PWR-141, PWR-142, PWR-143, PWR-144, PWR-144A, PWR-145, SI-H-207, SI-H-208, SI-H-209, SI-H-210, SI-H-211, SI-H-212 and SI-R-351-3	--	--	8	2-2521
165.	F3.10-F3.50	10" Accumulator Discharge-PWR-147, PWR-147A, PWR-148, PWR-148A, PWR-148B, PWR-149, PWR-149A, PWR-150, PWR-150A and SI-H&R-353-2	--	--	8	2-2523

Program Item	IWF-2500-1 Reference	Area and Extent of Examination	Examination Procedure Vol.	Surf.	Vis	Sketch Reference
		Supports and Hangers (Cont'd)				
166.	F3.10-F3.50	8" RHR-SI-H-94-1	--	--	8	2-2530
167.	F3.10-F3.50	8" & 6" RHR-SI-H-555	--	--	8	2-2532
168.	F3.10-F3.50	8" RHR-SI-H-359-1	--	--	8	2-2533
169.	F3.10-F3.50	6" SIS-MS-60-5-SI-H56, SI-H-60-7, SI-H-56-9, SI-H-56-10 and SI-H&R-56-11	--	--	8	2-2540
170.	F3.10-F3.50	6" RHR-AC-R-3042-003, AC-R-3042-004, AC-R-3042-005, AC-R-3042-006 and AC-R-3042-007	--	--	8(5)	2-2544
171.	F3.10-F3.50	Residual Heat Removal Pump ACAPRH1-31	--	--	8	2-3100
172.	F3.10-F3.50	Residual Heat Removal Pump ACAPRH2-32	--	--	8	2-3100
173.	F3.10-F3.50	Charging Pump CSAPCH1-31	--	--	8	2-3110
174.	F3.10-F3.50	Charging Pump CSAPCH2-32	--	--	8	2-3110
175.	F3.10-F3.50	Charging Pump CSAPCH3-33	--	--	8	2-3110
176.	F3.10-F3.50	Safety Injection Pump-SIAPS11-31	--	--	8	2-3130
177.	F3.10-F3.50	Safety Injection Pump SIAPS12-32	--	--	8	2-3130
178.	F3.10-F3.50	Residual Heat Exchangers ACAHRS1-31 and ACAHRS2-32	--	--	8	3-1100
179.	F3.10-F3.50	Excess Letdown Heat Exchanger CSAHEL1-31	--	--	8	3-1150
180.	F3.10-F3.50	Reactor Coolant Pump RCPCPC3-33 and Reactor Coolant Pump RCPCPC4-34 Lube Oil Coolers	--	--	8	3-1170
181.	F3.10-F3.50	Cooling Water Heat Exchangers 31 and 32	--	--	8	3-1180

Program Item	IWF-2500-1 Reference	Area and Extent of Examination	Examination Procedure Vol.	Surf.	Vis	Sketch Reference
		Supports and Hangers (Cont'd)				
182.	F3.10-F3.50	Residual Heat Removal Pumps ACAPRH1-31 and ACAPRH2-32 Seal Water Heat Exchanger	--	--	8	3-1190
183.	F3.10-F3.50	Recirculation Fan Coolers 34 and 35	--	--	8	3-1510
184.	F3.10-F3.50	Safety Injection Pump SIAPS12-32 Oil Coolers (2)	--	--	8	3-1520
185.	F3.10-F3.50	Charging Pump CSAPCH1-31 Fluid Drive Cooler	--	--	8	3-1530
186.	F3.10-F3.50	Charging Pump CSAPCH2-32 Fluid Drive Cooler	--	--	8	3-1530
187.	F3.10-F3.50	Charging Pump CSAPCH3-33 Fluid Drive Cooler	--	--	8	3-1530
188.	F3.10-F3.50	14" Service Water Line 1084-SWN-A-1084-2, SWN-H&R-1084-1, SWN-H&R-1084-3 and SWN-H&R-1084-6	--	--	8	3-3401
189.	F3.10-F3.50	14" Service Water Line 1085-SWN-A-1085-2, SWN-H&R-1085-1, SWN-H&R-1085-3 and SWN-H&R-1085-6	--	--	8	3-3401
190.	F3.10-F3.50	14" Service Water Line 1086 SWN-A-1086-2, SWN-H&R-1086-1, SWN-H&R-1086-3 and SWN-H&R-1086-6	--	--	8	3-3401
191.	F3.10-F3.50	24" Line 409 - SWN-H-409-6	--	--	8	3-3402
192.	F3.10-F3.50	24" Service Water Line 408-M/S-508-SWN-H&R-408, M/S-508A-SWN-H&R-408, M/S-509-SWN-H&R-408, M/S-510-SWN-H&R-408, M/S-511-SWN-H&R-408, M/S-547-SWN-R-408 and, SWN-H-408-3	--	--	8	3-3403
193.	F3.10-F3.50	10" Service Water Line 1222-SWN-A-197	--	--	8	3-3403

Program Item	IWF-2500-1 Reference	Area and Extent of Examination	Examination Procedure Vol.	Surf.	Vis	Sketch Reference
		Supports and Hangers (Cont'd)				
194.	F3.10-F3.50	20" & 18" Service Water Line 411-M/S-407-1-SWN-H&R-411, M/S-407-2-SWN-H&R-411, M/S-407-3-SWN-H&R-411, M/S-407-4-SWN-H&R-411, M/S-502-SWN-H&R-411, M/S-503-SWN-H&R-411, M/S-504-SWN-H&R-411, M/S-505-SWN-H&R-411, M/S-506-SWN-H&R-411, M/S-507-SWN-H&R-411, M/S-563-SWN-R-411, SWN-R-556, SWN-H-557 and SWN-H&R-558	--	--	8	3-3405
195.	F3.10-F3.50	18" Service Water Line 408-SWN-H&R-525 and SWN-H&R-526	--	--	8	3-3405
196.	F3.10-F3.50	24" Service Water Line 405-M/S-407-2-SWN-H&R-405, M/S-407-3-SWN-H&R-405, M/S-502-SWN-H&R-405, SWN-R-405-2A, M/S-503-SWN-H&R-405, SWN-H&R-562A, M/S-504-SWN-H&R-405, M/S-407-2A-SWN-H&R-405, M/S-505-SWN-H&R-405, M/S-407-2B-SWN-H&R-405, M/S-506-SWN-H&R-405, M/S-507-SWN-H&R-405, M/S-508-SWN-H&R-405, M/S-508A-SWN-H&R-405, M/S-509-SWN-H&R-405, M/S-510-SWN-H&R-405, M/S-511-SWN-H&R-405, SWN-A-561, SWN-H&R-562, SWN-R-563 SWN-R-564 and SWN-R-405-2	--	--	8	3-3407
197.	F3.10-F3.50	18" Service Water Line 509-SWN-R-405-1B	--	--	8	3-3407
198.	F3.10-F3.50	14" Service Water Line 405-SWN-R-560	--	--	8	3-3407
199.	F3.10-F3.50	6" Service Water Line 390-SWH-H&R-390-1	--	--	8	3-3407

Program Item	IWF-2500-1 Reference	Area and Extent of Examination	Examination Procedure Vol.	Surf.	Vis	Sketch Reference
		Supports and Hangers (Cont'd)				
200.	F3.10-F3.50	6" Service Water Lines 1093, 1094, 1095, 1096, 1097, 1098, 1100 and 1101-SWN-R-1094-2, SWN-R-1095-2, SWN-R-1096-1, SWN-R-1097-1, SWN-R-1098-1, SWN-R-1099-2, SWN-R-1100-2, SWN-R-1101-2, SWN-H&R-1098-2, SWN-H&R-1099-1, SWN-H&R-1100-1, SWN-H&R-1101-1, SWN-R-1093-5, SWN-H&R-1093-4, SWN-H&R-1094-1, SWN-H&R-1095-1, SWN-H&R-1096-2 and SWN-H&R-1097-2	--	--	8	3-3415
201.	F3.10-F3.50	10" Service Water Line 1093 1096 & 1099-M/S-1093-1-SWN-H&R-1099, SWN-H&R-1093-1, SWN-H&R-1096-3, SWN-H&R-1096-4A, SWN-H&R-1096-4B and SWN-H&R-1096-3A	--	--	8	3-3416
202.	F3.10-F3.0	14" & 12" Component Cooling Line 52-M/S-53-6-AC-H&R-52, M/S-53-7-AC-H-52, M/S-53-8-AC-H&R-52, M/S-53-10-AC-R-52, AC-H-52-10, AC-H-52-11, AC-H-52-12 and AC-H-52-13	--	--	8	3-3502
203.	F3.10-F3.50	14" & 12" Component Cooling Water Line 52A-M/S-53A-5-AC-R-52A, M/S-53-6-AC-H&R-52A, M/S-53-7-AC-H-52A, M/S-53-8-AC-H&R-52A, M/S-53-10-AC-H-52A, AC-H-52A-10, AC-H-52A-11 and M/S-53A-5A-AC-R-52A	--	--	8	3-3502
204.	F3.10-F3.50	6" Component Cooling Water Line 14-AC-H-14-17	--	--	8	3-3502
205.	F3.10-F3.50	8" & 6" Component Cooling Water Line 516 and 149-M/S-515-2-AC-R-516, AC-H-478, AC-H-479, AC-H-480, AC-H-561, AC-H-563, AC-R-481, AC-H&R-477, AC-H&R-516, AC-H&R-476A and AC-H&R-562	--	--	8	3-3503

Program Item	IWF-2500-1 Reference	Area and Extent of Examination	Examination Procedure Vol.	Surf.	Vis	Sketch Reference
		Supports and Hangers (Cont'd)				
206.	F3.10-F3.50	6" Component Cooling Water 168 M/S-167-5-AC-H&R-168, AC-R-168 and AC-H&R-168-4	--	--	8	3-3503
207.	F3.10-F3.50	8" Spent Fuel Pit Cooling Water Lines 327 and 328- AC-H&R-327-1, AC-H&R-327-8, AC-H&R-328-2, SFPC-R-2, SFPC-R-3, SFPC-R-5, AC-H&R-327-30, SFPC-R-6, AC-H-328-6, AC-H-328-9, SFPC-V-12, SFPC-V-15, AC-H-328-5, AC-H&R-328-1, AC-R-328-3, AC-H&R-328-4, AC-H&R-328-4A, AC-H&R-328-7, AC-H&R-328-8, AC-R-328-10 and H1	--	--	8	3-3600
208.	F3.10-F3.50	4" & 3" Auxiliary Feedwater Lines 1002 and 1008-BFD-R-1002-1A, BFD-H&R-1002-1B, BFD-H-1002-1C, BFD-H&R-1002-1D, BFD-H-1002-1E, BFD-H&R-1002-1F, BFD-H&R-1002-1G, BFD-R-1002-1H, BFD-H&R-1002-2, BFD-H&R-1002-3, BFD-H&R-1002-4, BFD-H&R-1002-5, BFD-H-1002-6, BFD-R-1002-7, BFD-H&R-1002-8, BFD-H-1002-9, BFD-H&R-1002-10, BFD-H&R-1002-11, BFD-H-1002-12, BFD-R-1002-13, BFD-R-1008-2A, BFD-H&R-1008-1, BFD-H&R-1008-2B, BFD-H-1008-2C, BFD-H&R-1008-2D, BFD-H-1008-2E, BFD-H&R-1008-2F, BFD-R-1008-2G, BFD-R-1008-3A, BFD-H&R-1008-3B, BFD-H&R-1002-8A, PWR-561, PWR-562, PWR-563, PWR-565, PWR-566, PWR-568, PWR-569 and PWR-570	--	--	8	3-3704
209.	F3.10-F3.50	4" Auxiliary Feedwater Line 1004- BFD-R-1004-5, BFD-H&R-1004-6, BFD-H&R-1004-7, BFD-R-1004-8 and BFD-H-1004-9	--	--	8	3-3708
210.	F3.10-F3.50	Component Cooling Pumps ACAPCC1-31, ACAPCC2-32 and ACAPCC3-33	--	--	8	3-4130

Program Item	IWF-2500-1 Reference	Area and Extent of Examination	Examination Procedure Vol.	Surf.	Vis	Sketch Reference
		Supports and Hangers (Cont'd)				
211.	F3.10-F3.50	Auxiliary Feedwater Pumps 31 and 33 (Motor Driven)	--	--	8	3-4140
212.	F3.10-F3.50	Auxiliary Feedwater Pump 32 (Turbine Driven)	--	--	8	3-4150

Notes:

1. Performed by Plant Personnel during System Leakage Test.
2. Performed by Plant Personnel during System Leakage Test per Relief Request.
3. Surface examination only per Relief Request.
4. Reexamination of Indication detected during 1989 Outage per NRC Bulletin 88-08 Supplement 2 Requirements.
5. Baseline Examination.

Reference: Section XI 1983 Edition Page 69

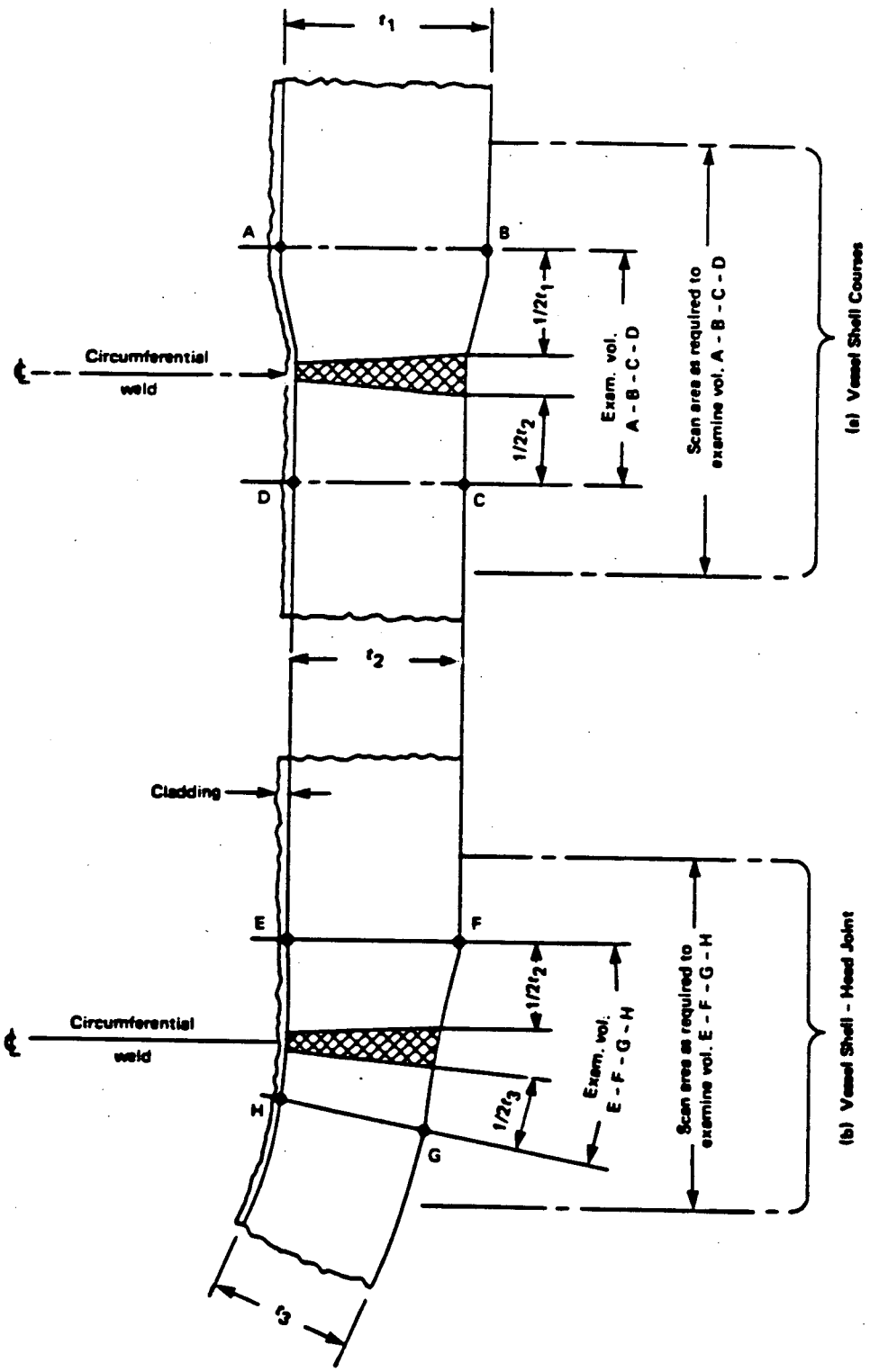

FIG. IWB-2500-1 VESSEL SHELL CIRCUMFERENTIAL WELD JOINTS

Reference: Section XI 1983 Edition Page 70

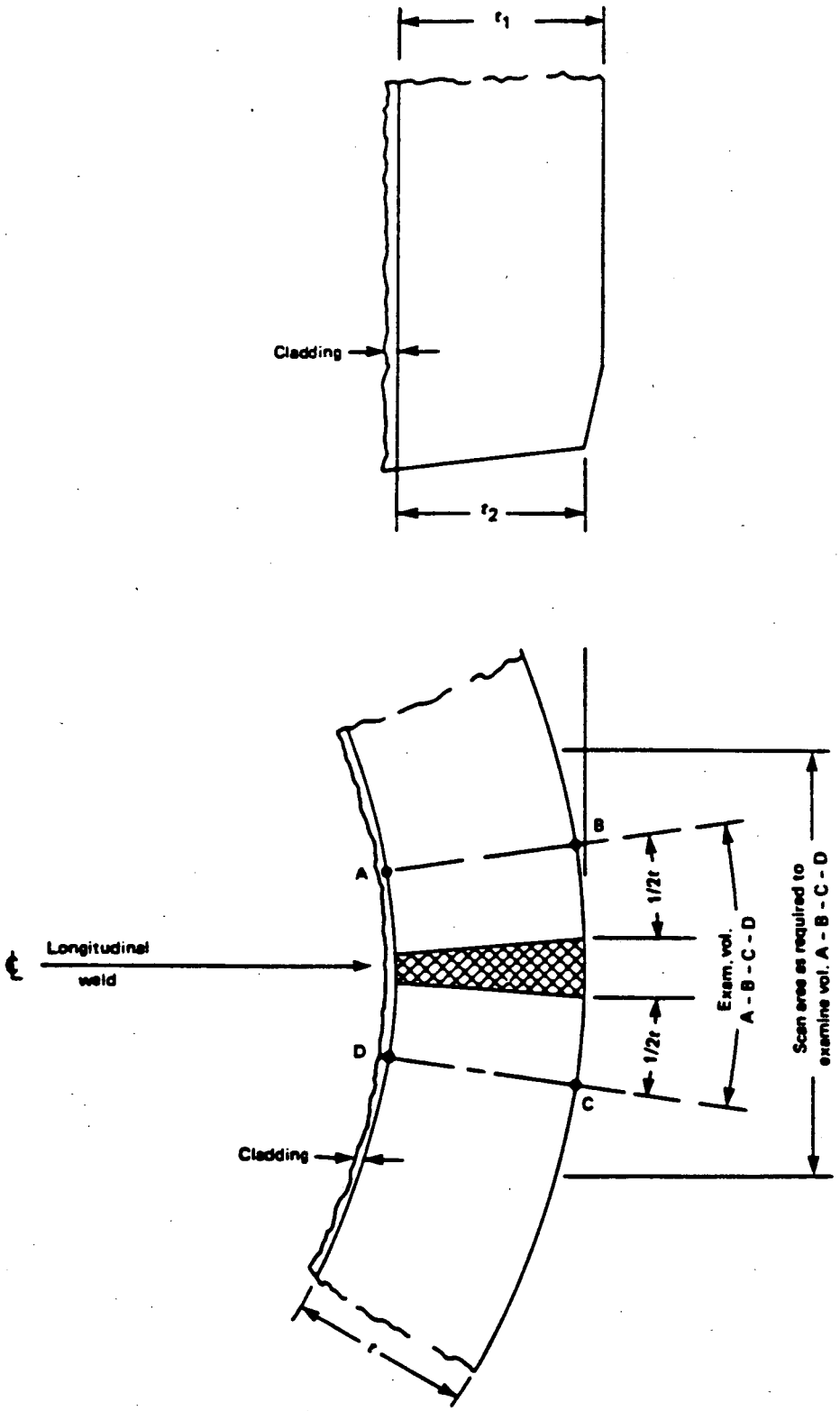

FIG. IWB-2500-2 VESSEL SHELL LONGITUDINAL WELD JOINTS

Reference: Section XI 1983 Edition Page 71

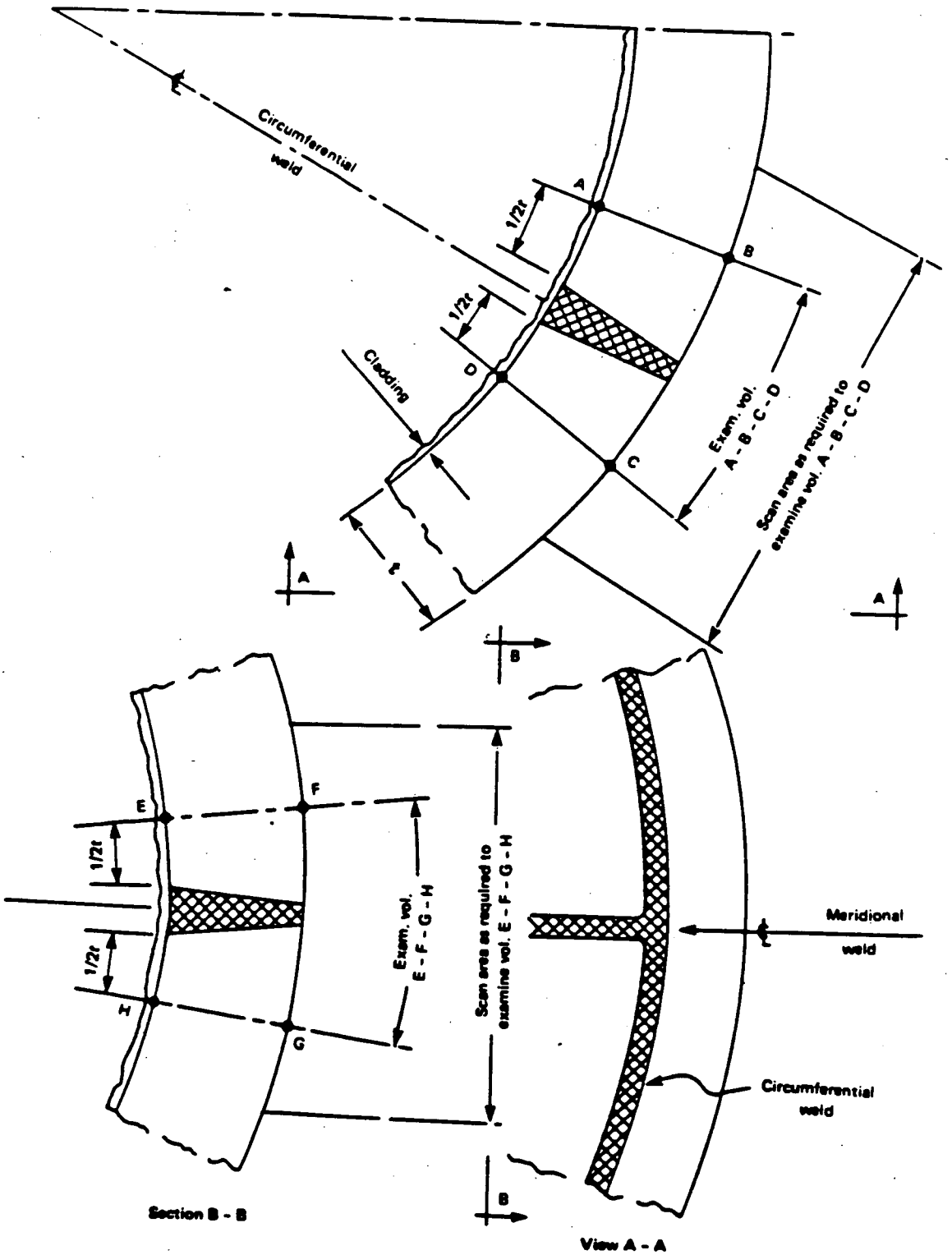

FIG. IWB-2500-3 SPHERICAL VESSEL HEAD
CIRCUMFERENTIAL AND MERIDIONAL WELD JOINTS

Reference: Section XI 1983 Edition Page 72

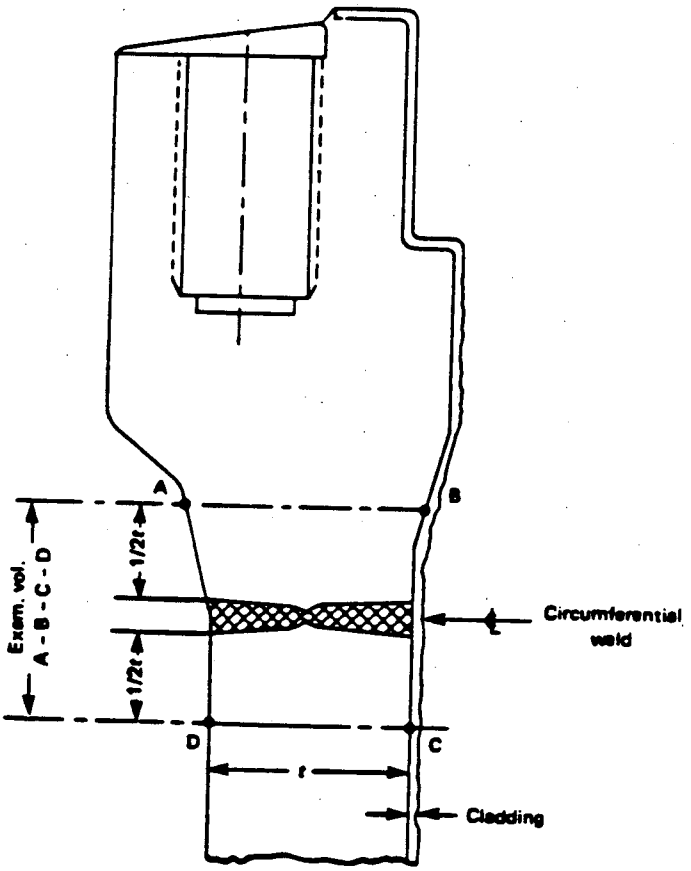

FIG. IWB-2500-4 SHELL-TO-FLANGE WELD JOINT

Reference: Section XI 1983 Edition Page 73

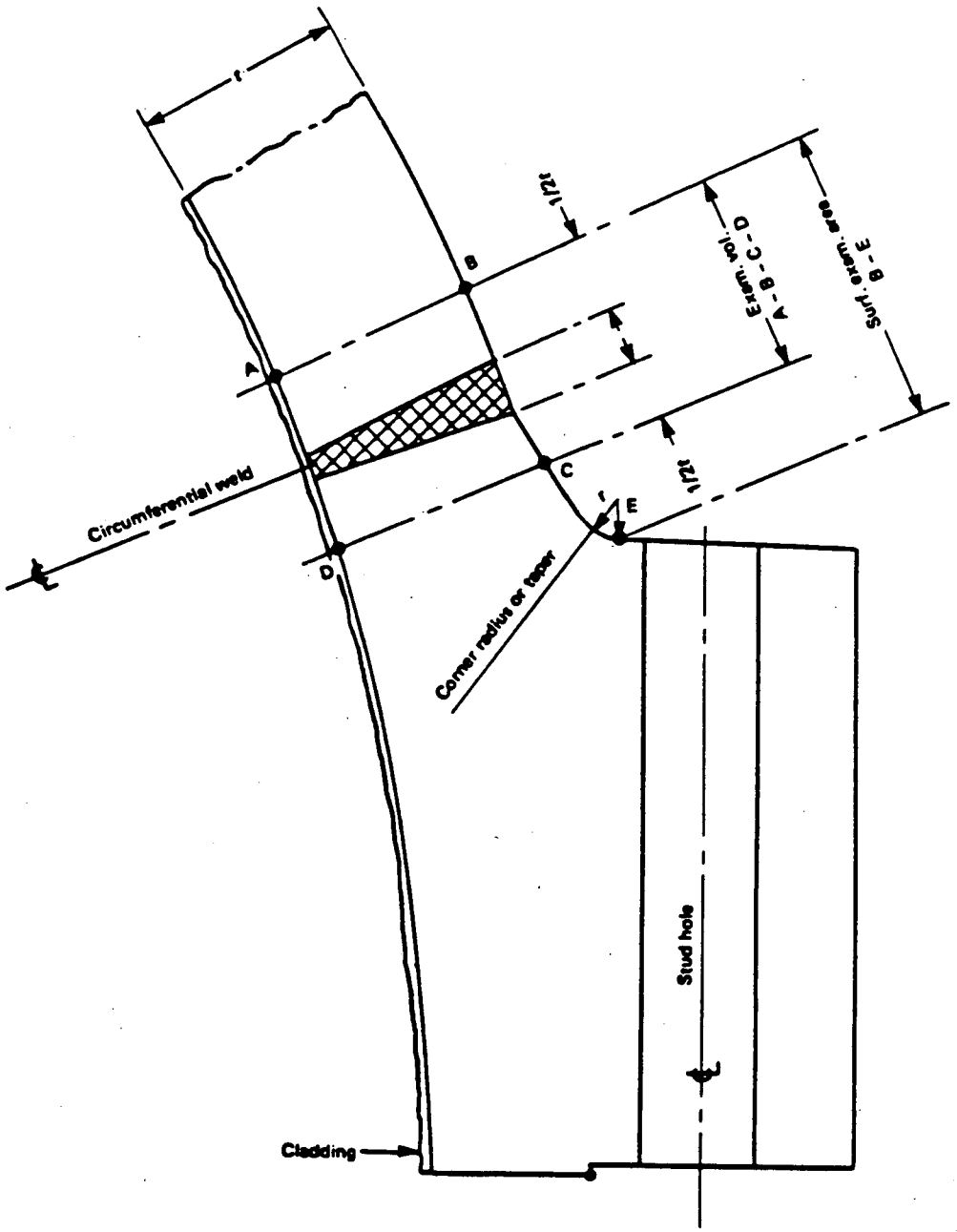

FIG. IWB-2500-5 HEAD-TO-FLANGE WELD JOINT

Reference: Section XI 1983 Edition Page 74

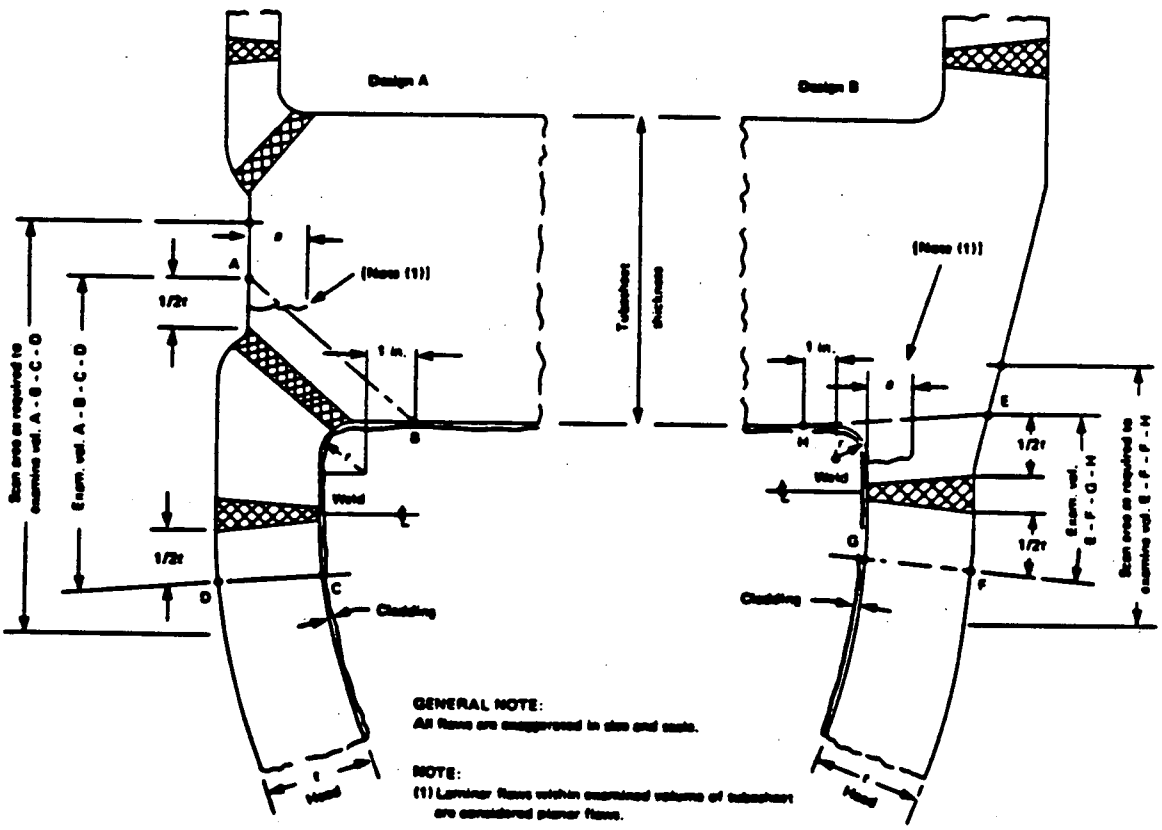

FIG. IWB-2500-6 TYPICAL TUBESHEET-TO-HEAD WELD JOINTS

FORM 46

57

Reference: Section XI 1983 Edition Page 75

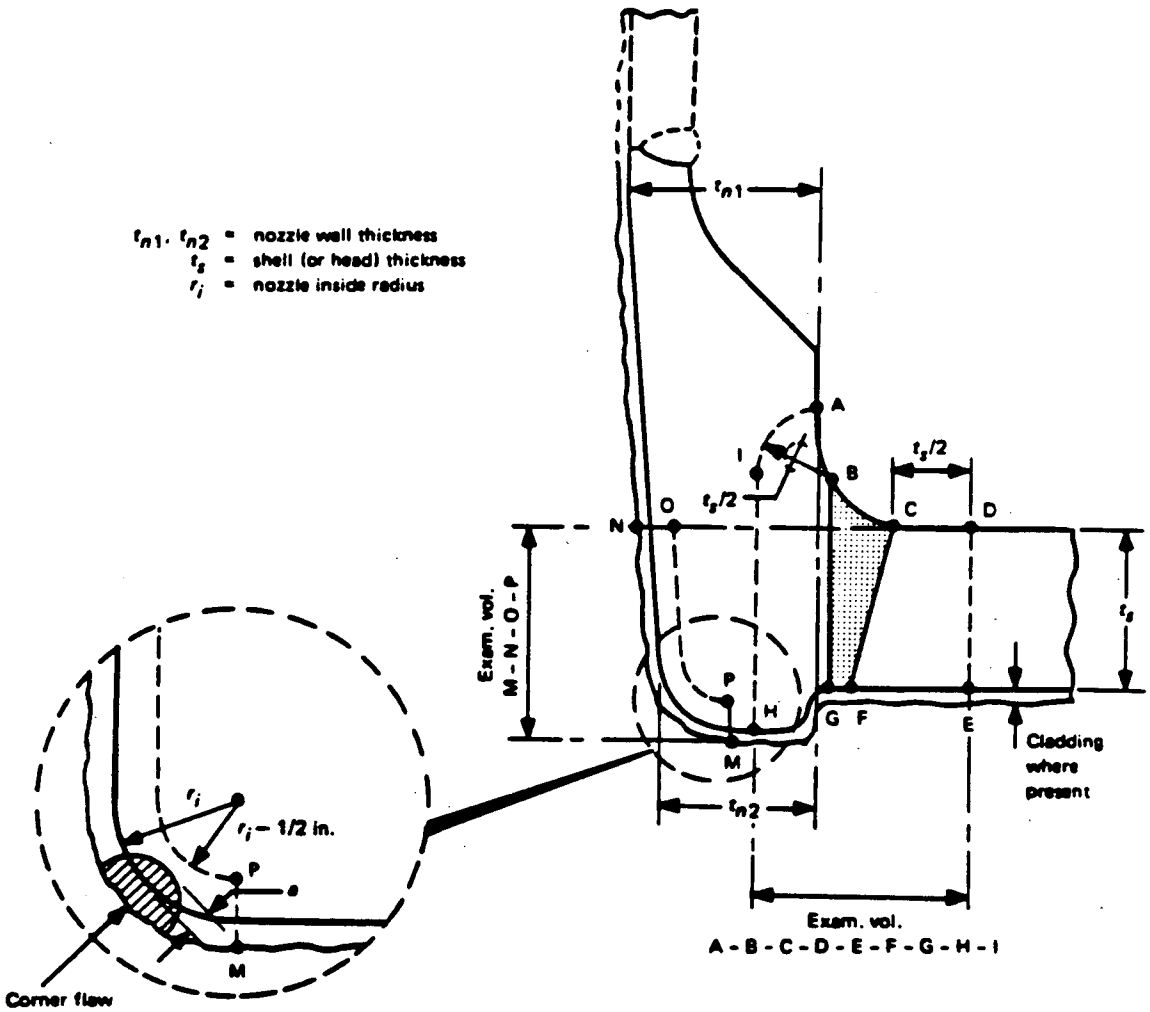

EXAMINATION REGION [Note (1)]

Shell (or head) adjoining region
Attachment weld region
Nozzle cylinder region
Nozzle inside corner region

EXAMINATION VOLUME [Note (2)]

C-D-E-F
B-C-F-G
A-B-G-H-I
M-N-O-P

NOTES:

(1) Examination regions are identified for the purpose of differentiating the acceptance standards in IWB-3512.
(2) Examination volumes may be determined either by direct measurements on the component or by measurements based on design drawings.

FIG. IWB-2500-7(a) NOZZLE IN SHELL OR HEAD
(Examination Zones in Barrel Type Nozzles Joined by Full Penetration Corner Welds)

Reference: Section XI 1983 Edition Page 75

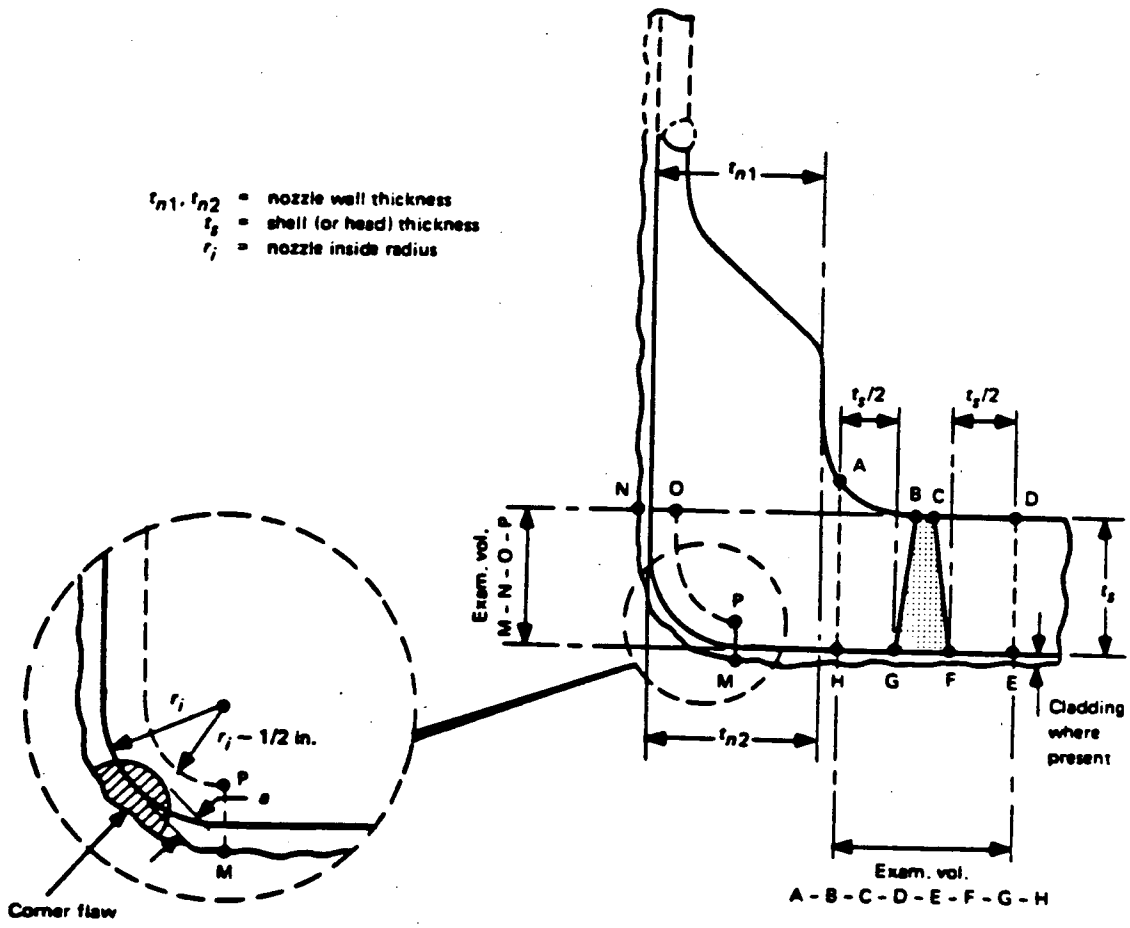

EXAMINATION REGION (Note (1))

Shell (or head) adjoining region
Attachment weld region
Nozzle cylinder region
Nozzle inside corner region

EXAMINATION VOLUME (Note (2))

C-D-E-F
B-C-F-G
A-B-G-H
M-N-O-P

NOTES:
(1) Examination regions are identified for the purpose of differentiating the acceptance standards in IWB-3512.
(2) Examination volumes may be determined either by direct measurements on the component or by measurements based on design drawings.

FIG. IWB-2500-7(b) NOZZLE IN SHELL OR HEAD
(Examination Zones in Flange Type Nozzles Joined by Full Penetration Butt Welds)

Reference: Section XI 1983 Edition Page 77

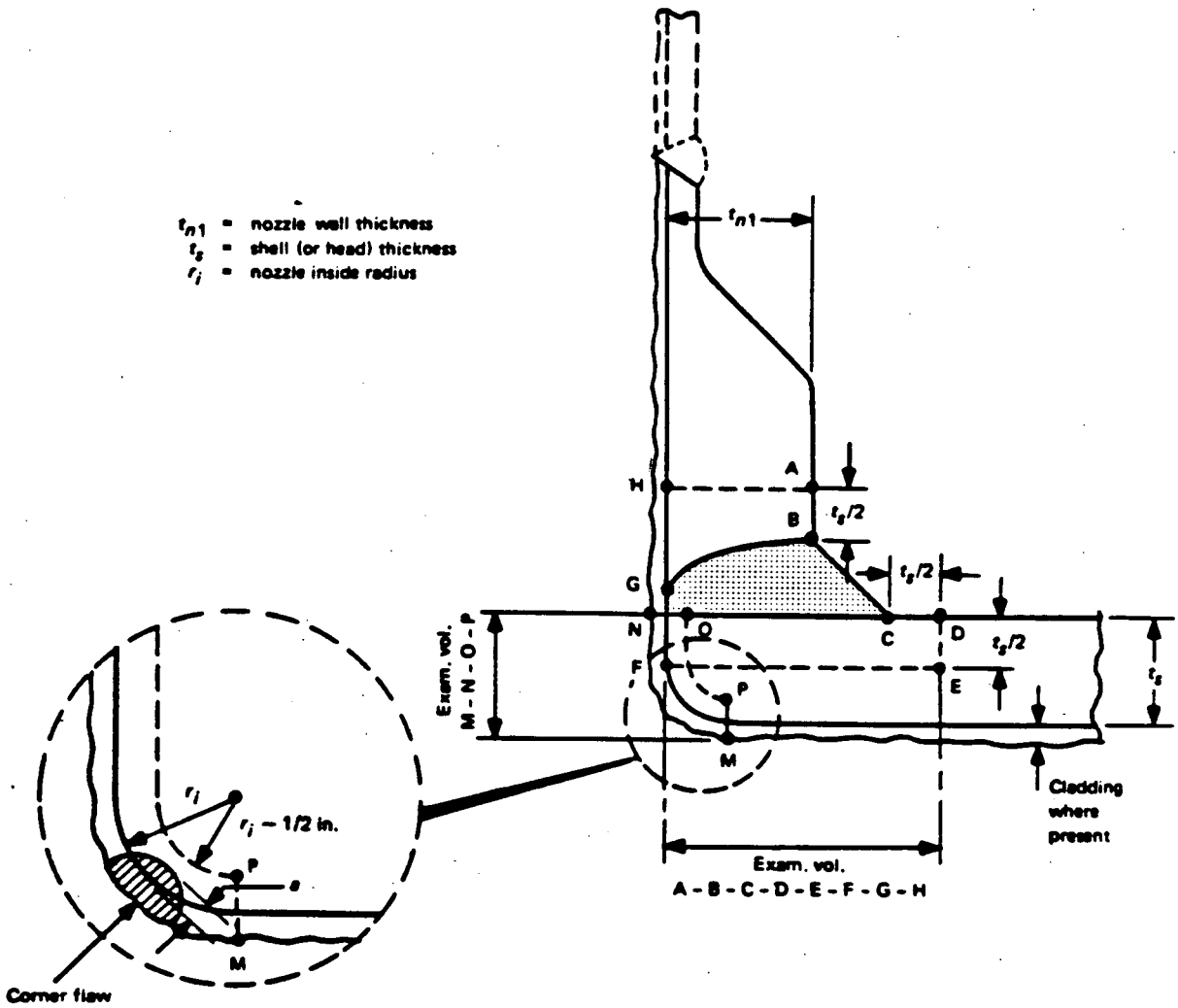

EXAMINATION REGION (Note (1))

Shell (or head) adjoining region
Attachment weld region
Nozzle cylinder region
Nozzle inside corner region

EXAMINATION VOLUME (Note (2))

C-D-E-F-G
B-C-G
A-B-G-H
M-N-O-P

NOTES:

(1) Examination regions are identified for the purpose of differentiating the acceptance standards in IWB-3512.
(2) Examination volumes may be determined either by direct measurements on the component or by measurements based on design drawings.

FIG. IWB-2500-7(c) NOZZLE IN SHELL OR HEAD
(Examination Zones in Set-On Type Nozzles Joined by Full Penetration Corner Welds)

Reference: Section XI 1983 Edition Page 78

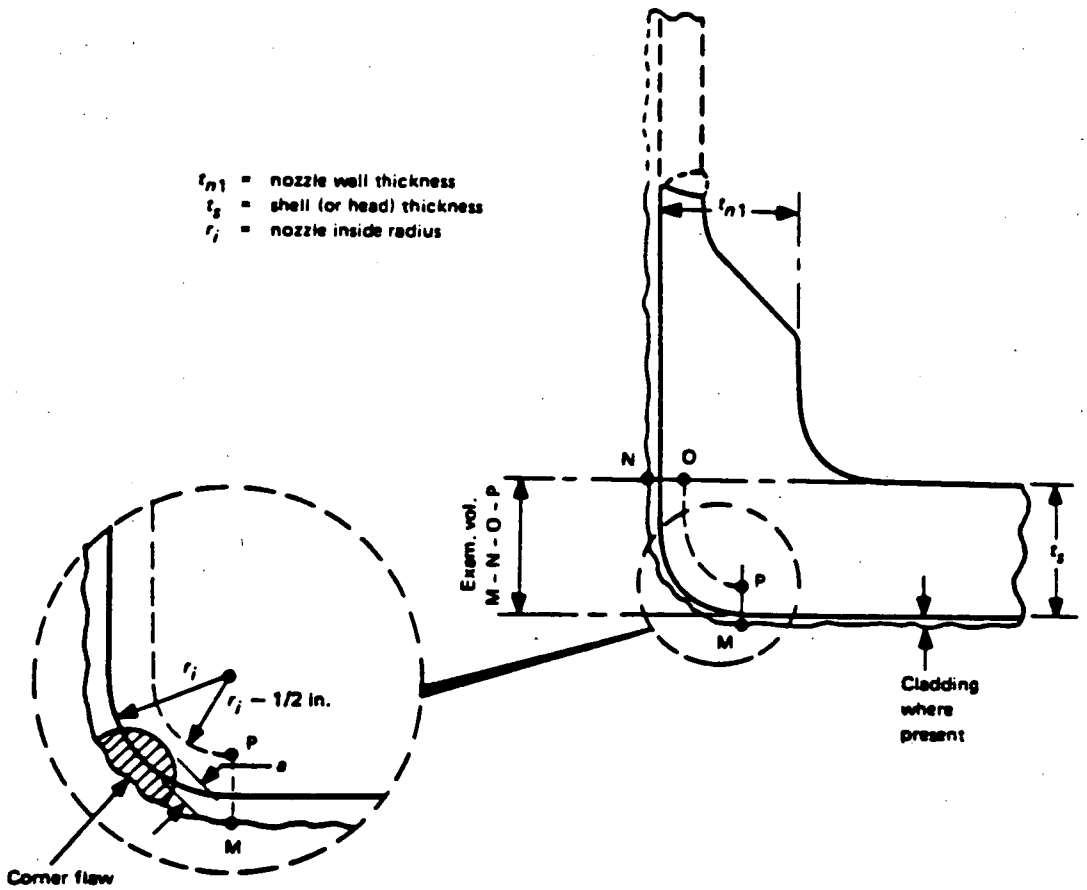

EXAMINATION REGION (Note (1))	EXAMINATION VOLUME (Note (2))
Nozzle inside corner region	M-N-O-P

NOTES:

(1) Examination regions are identified for the purpose of differentiating the acceptance standards in IWB-3512.

(2) Examination volumes may be determined either by direct measurements on the component or by measurements based on design drawings.

FIG. IWB-2500-7(d) NOZZLE IN SHELL OR HEAD
(Examination Zone in Nozzles Integrally Cast or Formed in Shell or Head)

Reference: Section XI 1983 Edition Page 79

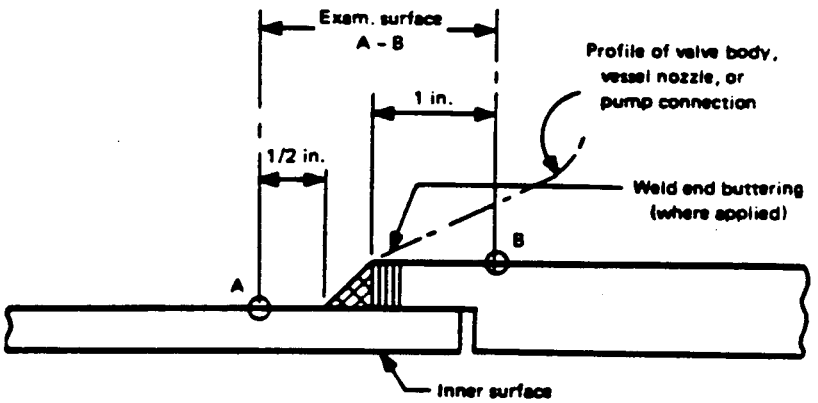

(a) Socket Welded Piping

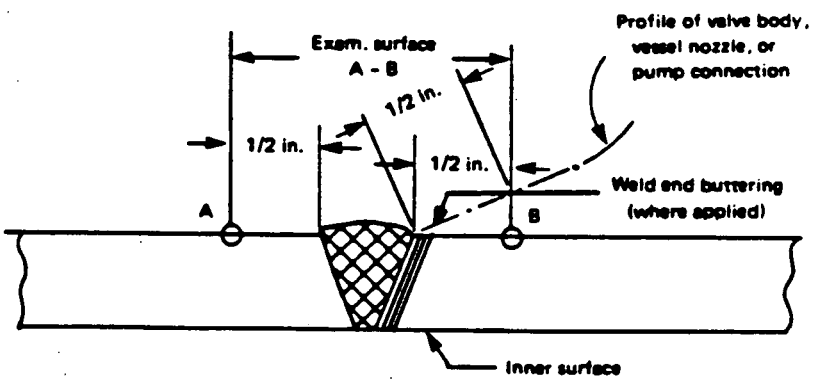

(b) NPS < 4 in.

FIG. IWB-2500-8 SIMILAR AND DISSIMILAR METAL WELDS IN COMPONENTS AND PIPING

Reference: Section XI 1983 Edition Page 80

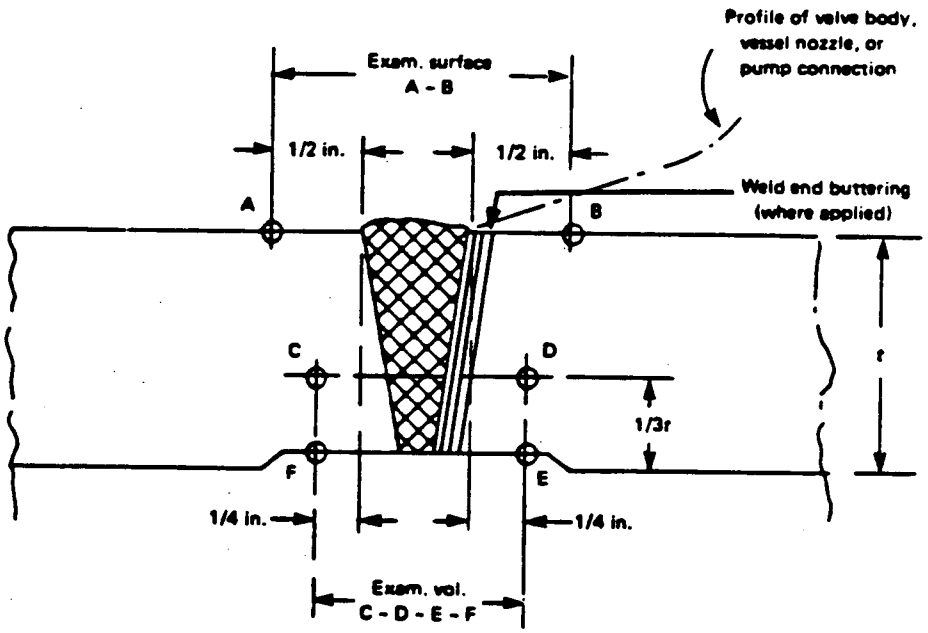

(c) NPS > 4 in.

FIG. IWB-2500-8 SIMILAR AND DISSIMILAR METAL WELDS IN COMPONENTS AND PIPING (CONT'D)

Reference: Section XI 1983 Edition Page 81

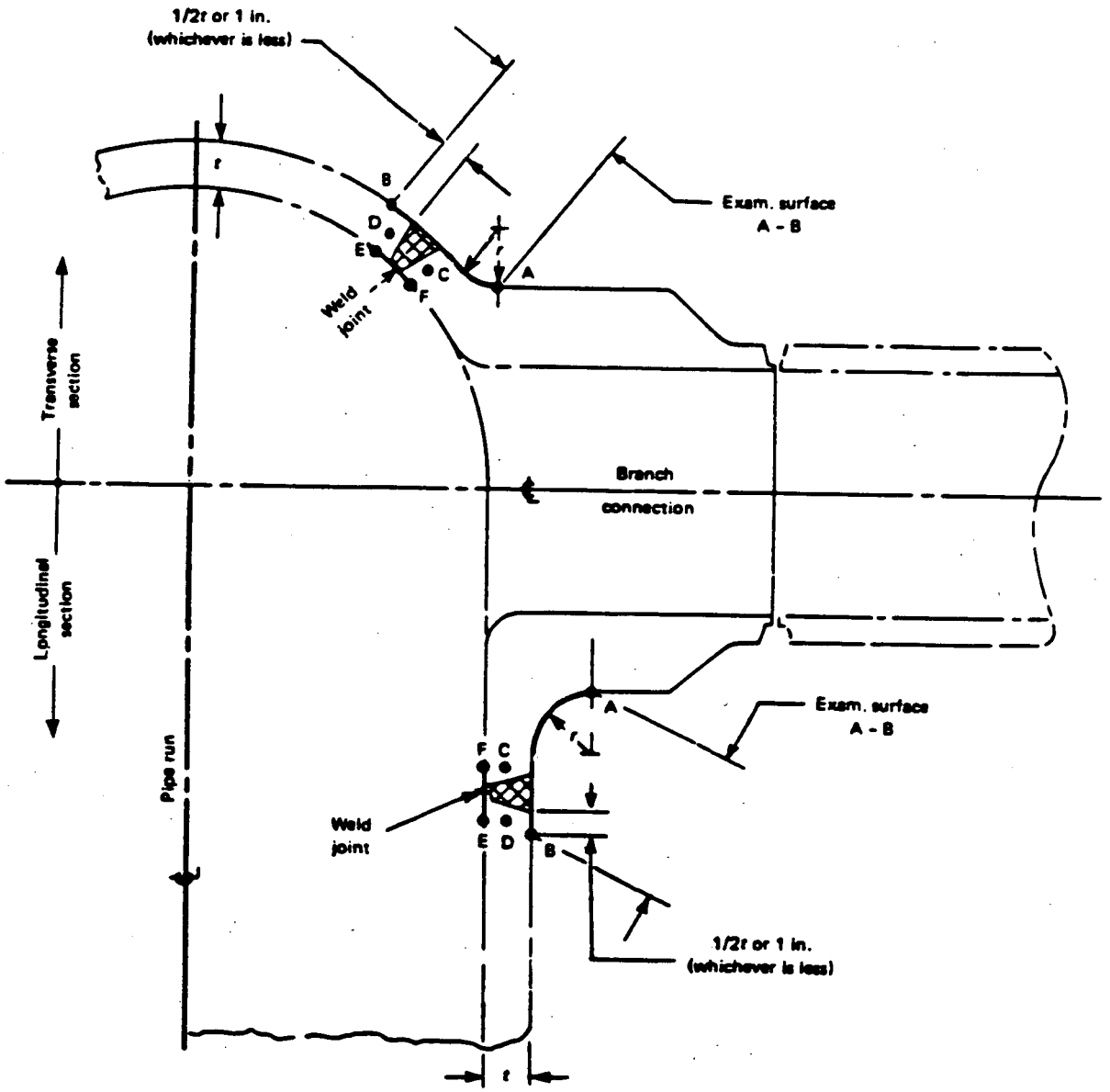

GENERAL NOTE:
Examination volumes C - D - E - F are defined per Fig. IWB-2500-8.

FIG. IWB-2500-9 PIPE BRANCH CONNECTION

Reference: Section XI 1983 Edition Page 82

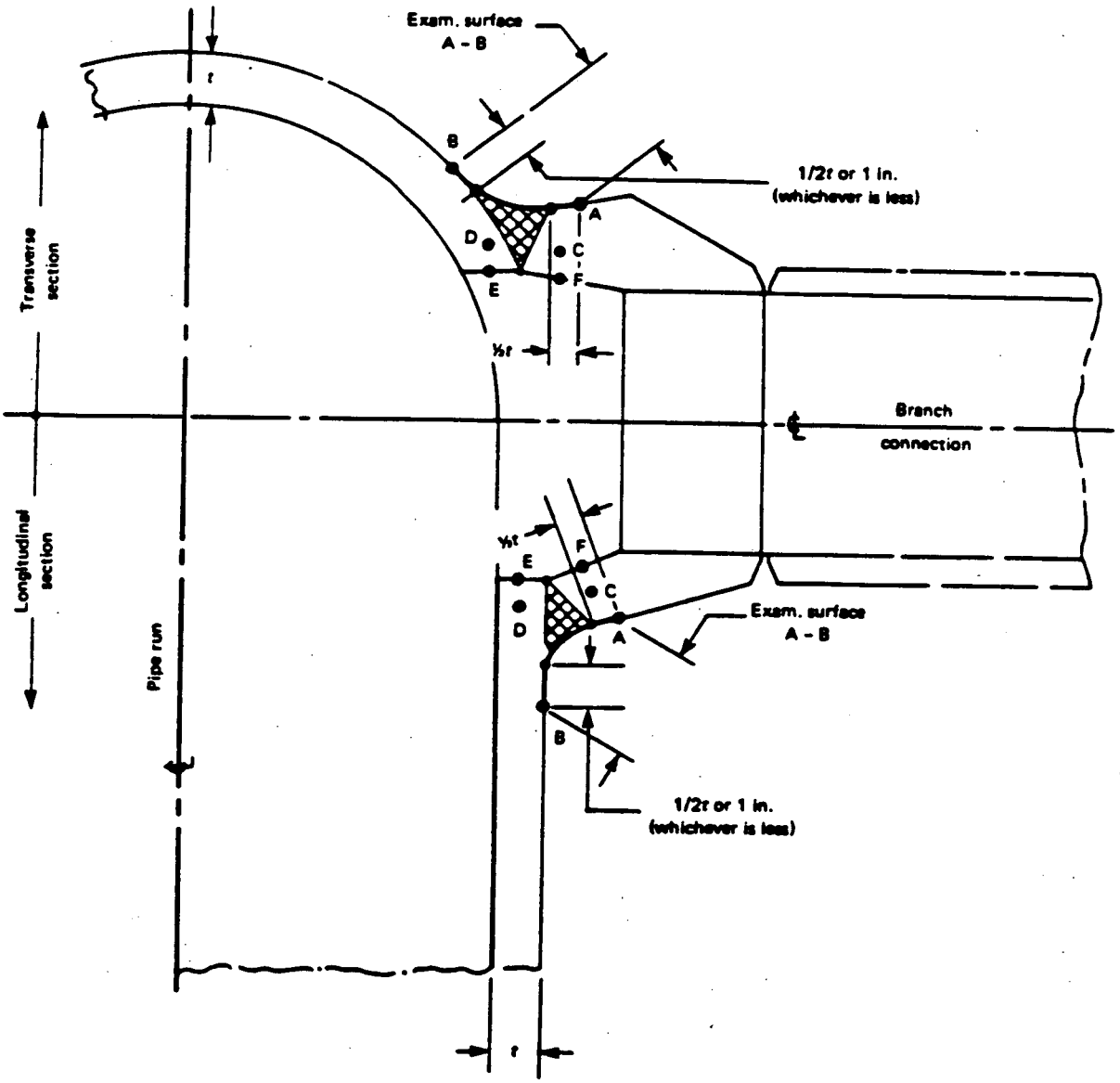

GENERAL NOTE:
Examination volumes C - D - E - F are defined per Fig. IWB-2500-8.

FIG. IWB-2500-10 PIPE BRANCH CONNECTION

FORM 46446

Reference: Section XI 1983 Edition Page 83

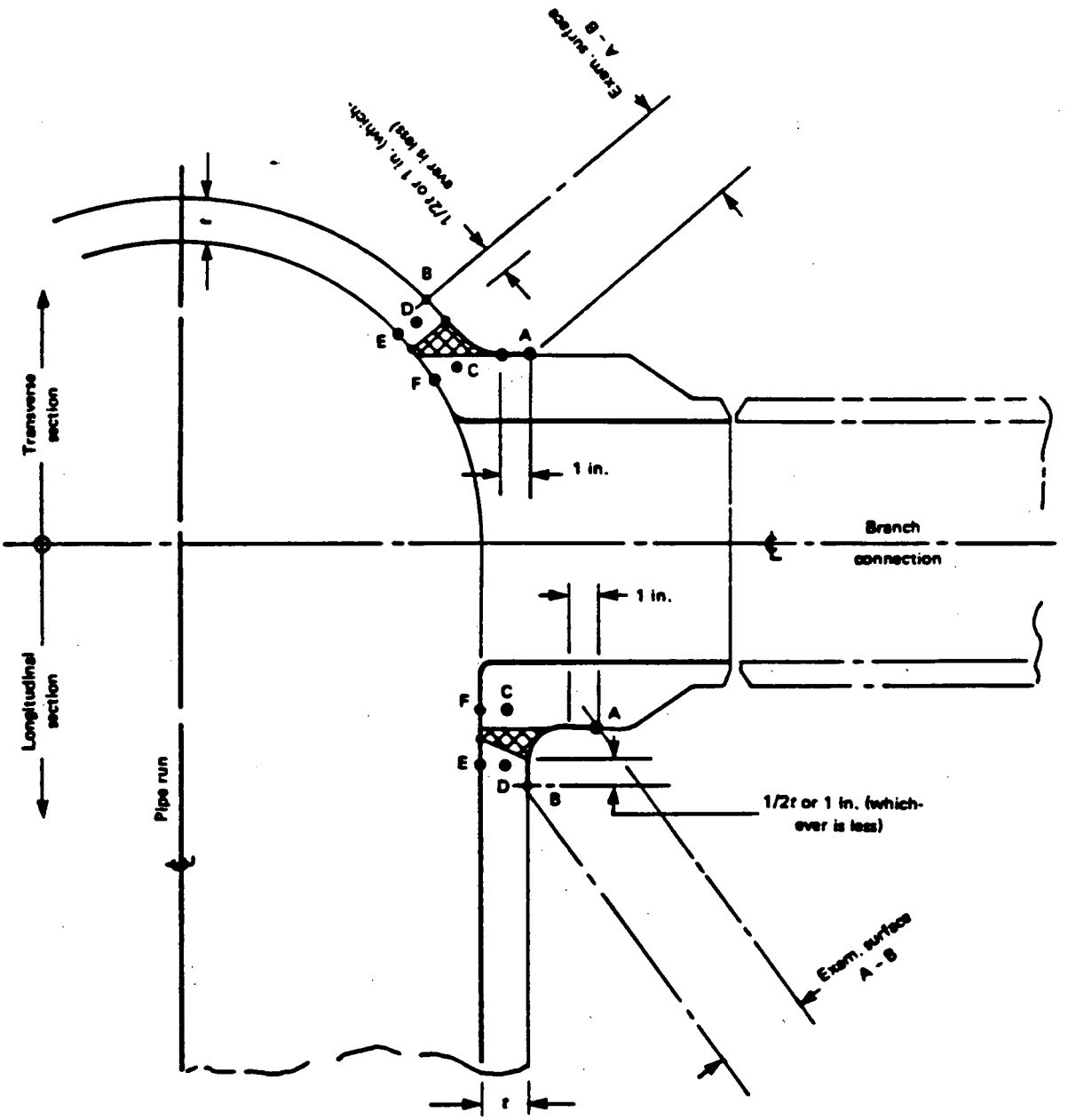

GENERAL NOTE: Examination volumes C - D - E - F are defined per Fig. IWB-2500-8.

FIG. IWB-2500-11 PIPE BRANCH CONNECTION

74

Reference: Section XI 1983 Edition Page 84

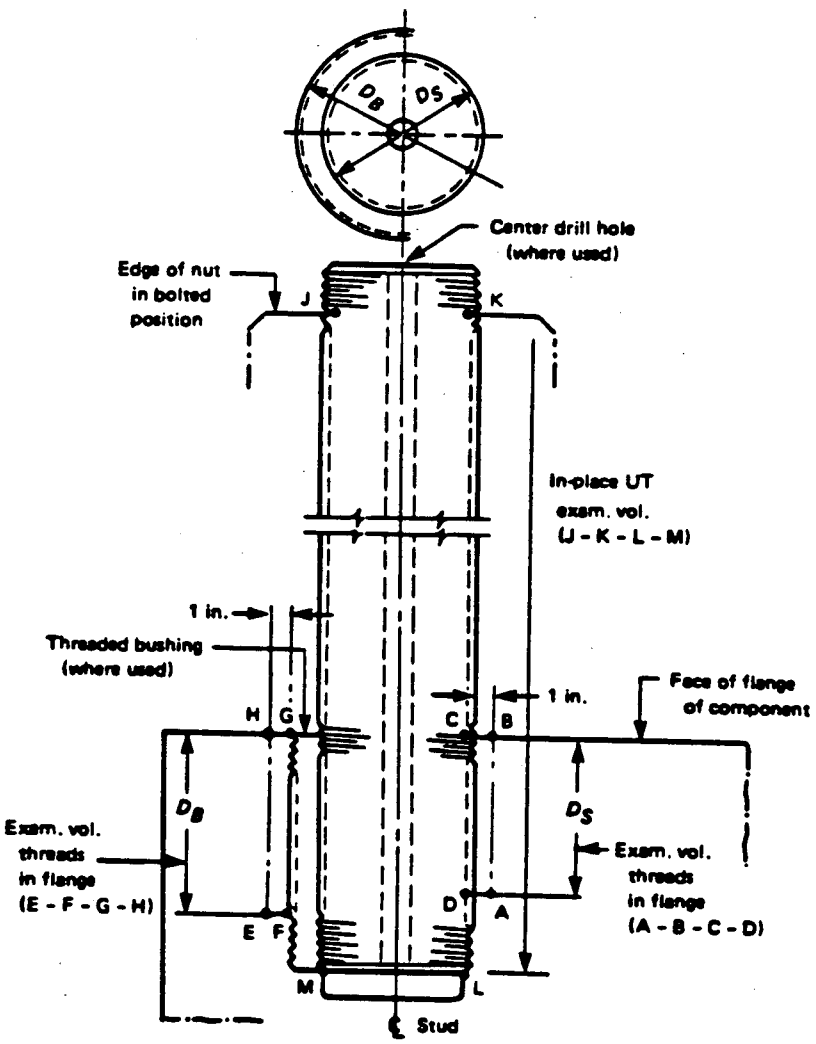

D_B = diameter of the threaded bushing
D_S = diameter of the stud

FIG. IWB-2500-12 CLOSURE STUD AND THREADS IN FLANGE STUD HOLE

Reference: Section XI 1983 Edition Page 85

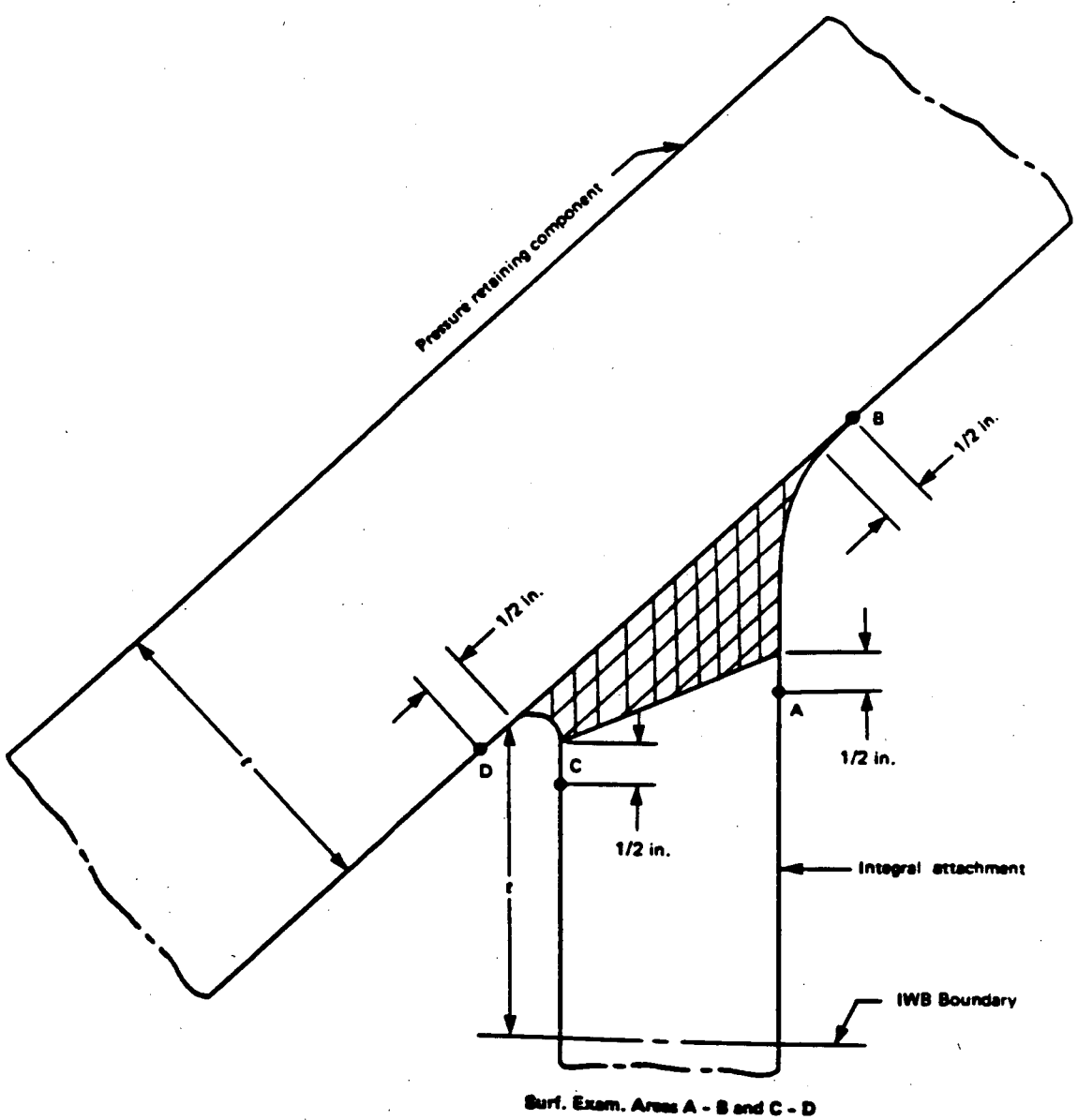

FIG. IWB-2500-13 INTEGRAL ATTACHMENT WELD

FORM 46446

Reference: Section XI 1983 Edition Page 86

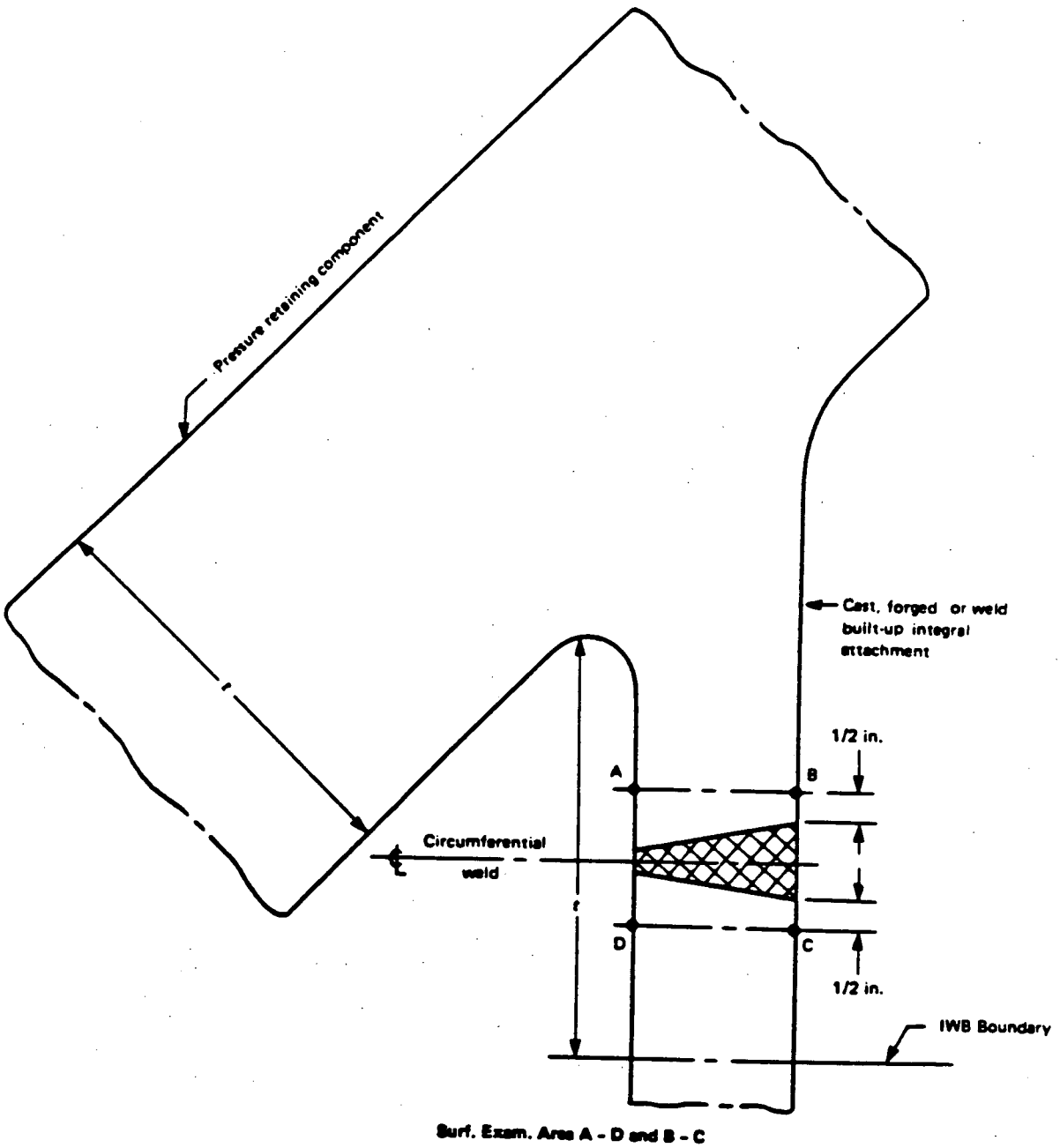

FIG. IWB-2500-14 SUPPORT CIRCUMFERENTIAL WELD JOINT

Reference: Section XI 1983 Edition Page 87

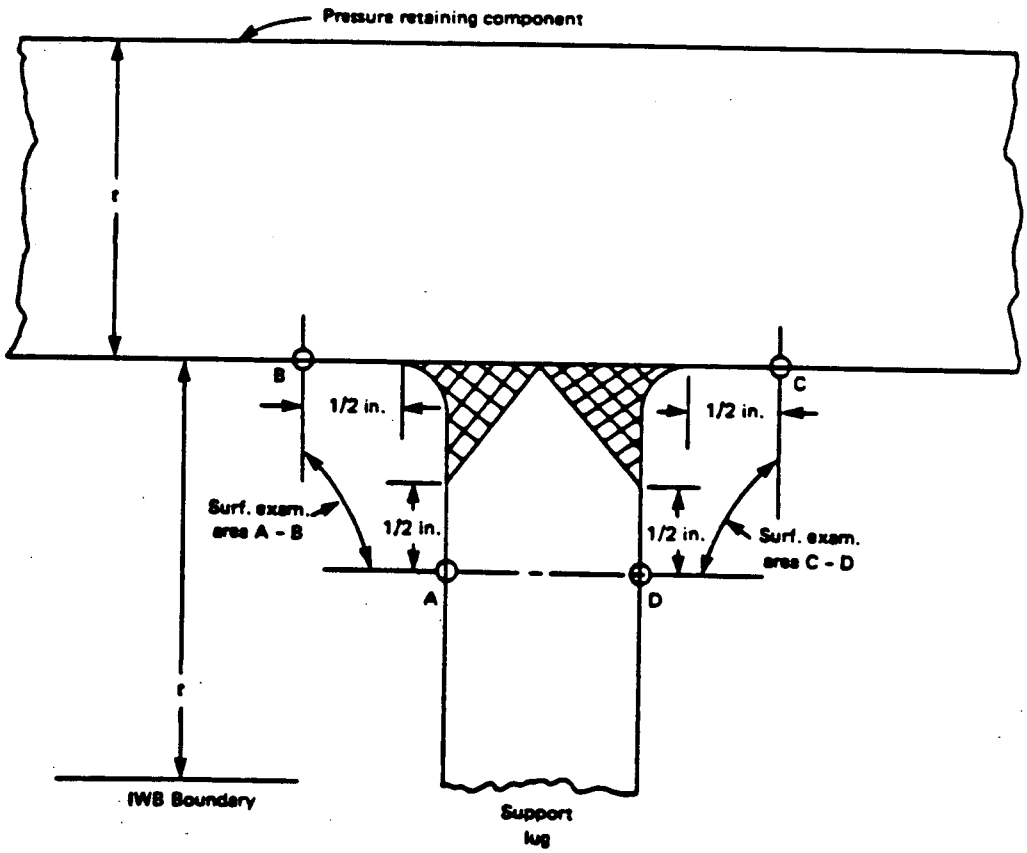

FIG. IWB-2500-15 INTEGRAL ATTACHMENT

Reference: Section XI 1983 Edition Page 88

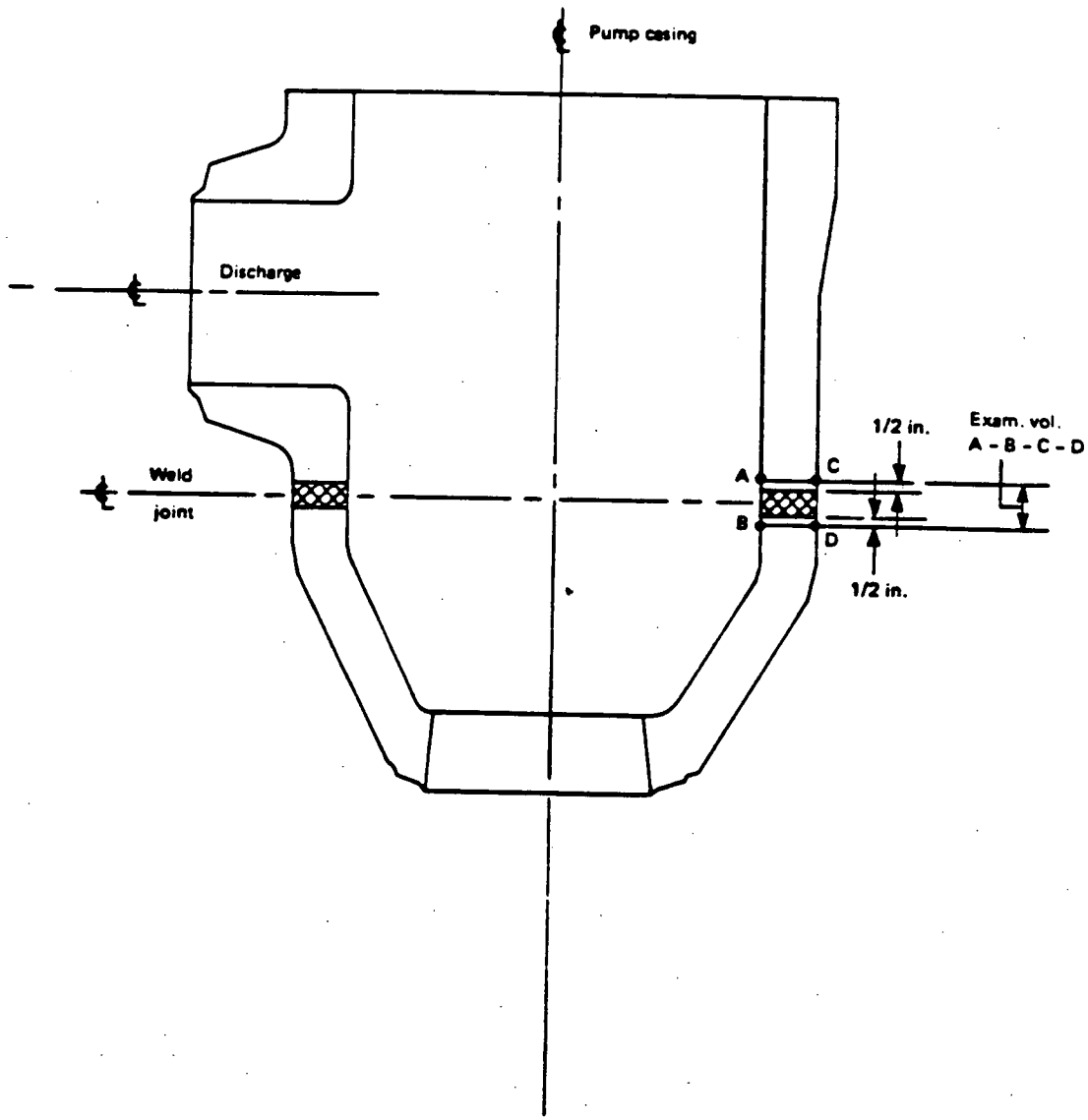

FIG. IWB-2500-16 PUMP CASING WELD
[Type F Pump (Section III)]

Reference: Section XI 1983 Edition Page 89

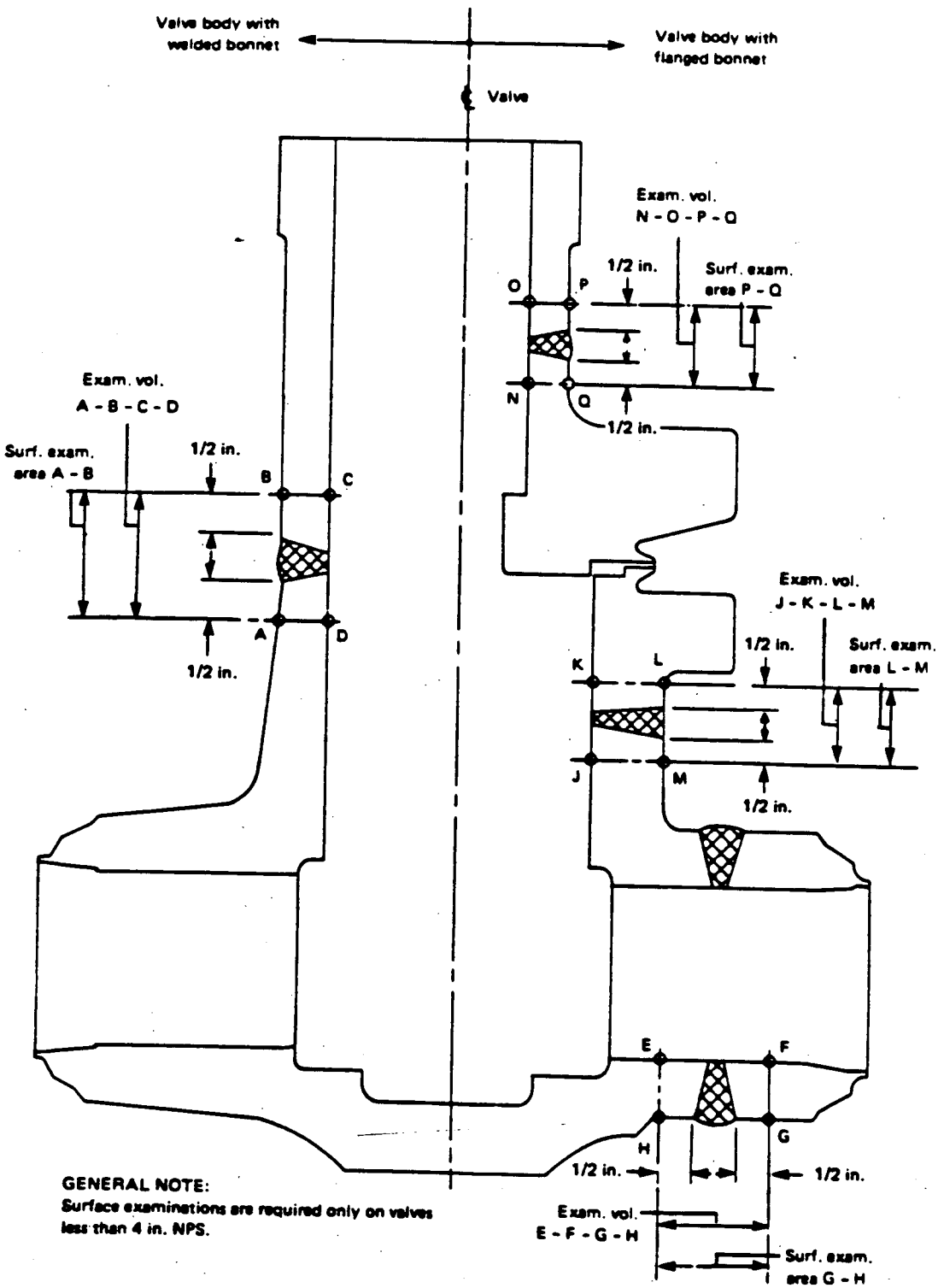

GENERAL NOTE:
Surface examinations are required only on valves less than 4 in. NPS.

FIG. IWB-2500-17 VALVE BODY WELDS

Reference: Section XI 1983 Edition Page 90

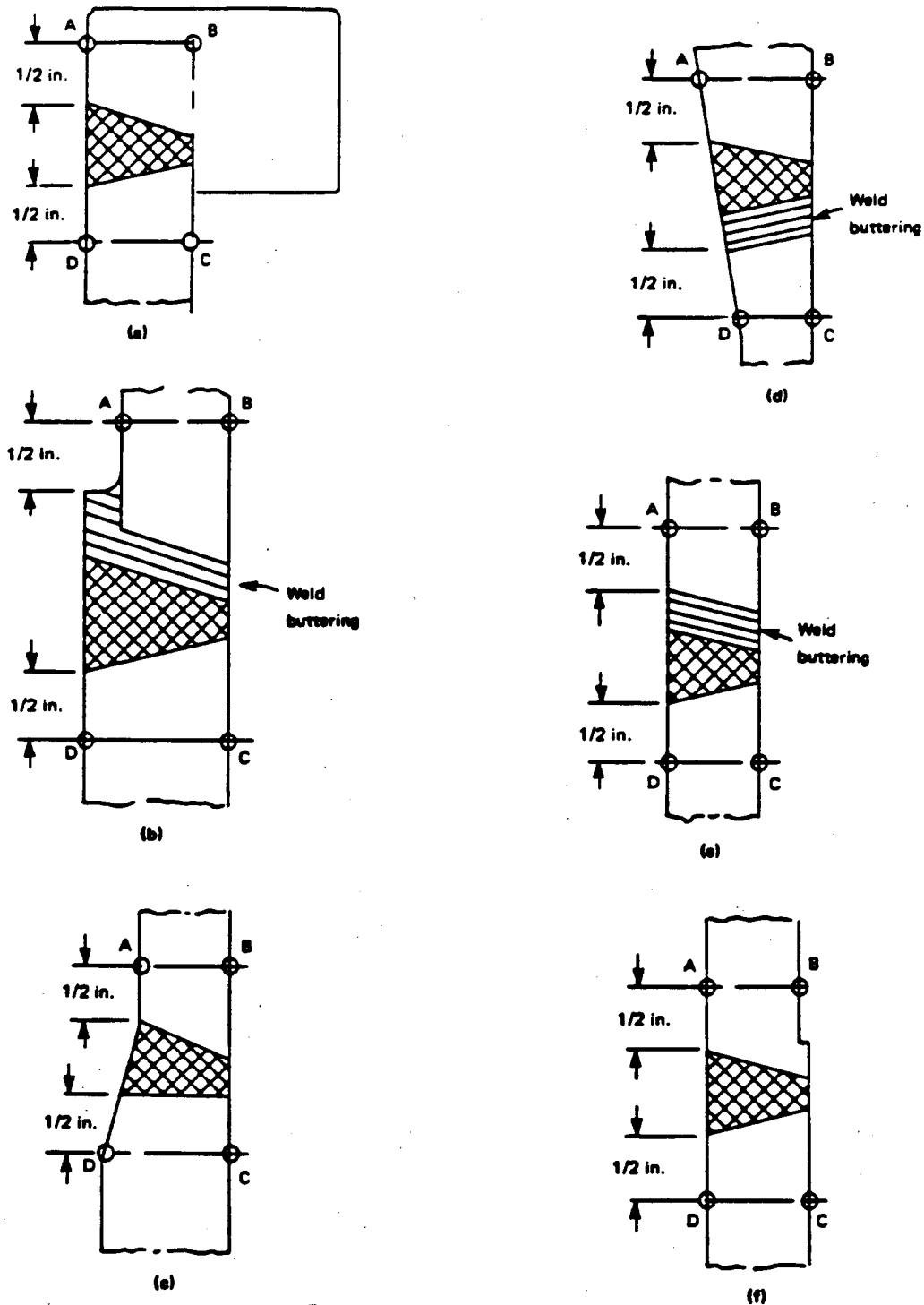

Examination Volume A - B - C - D
Surface Examination Area A - D

FIG. IWB-2500-18 CONTROL ROD DRIVE HOUSING WELDS

Reference: Section XI 1983 Edition Page 131

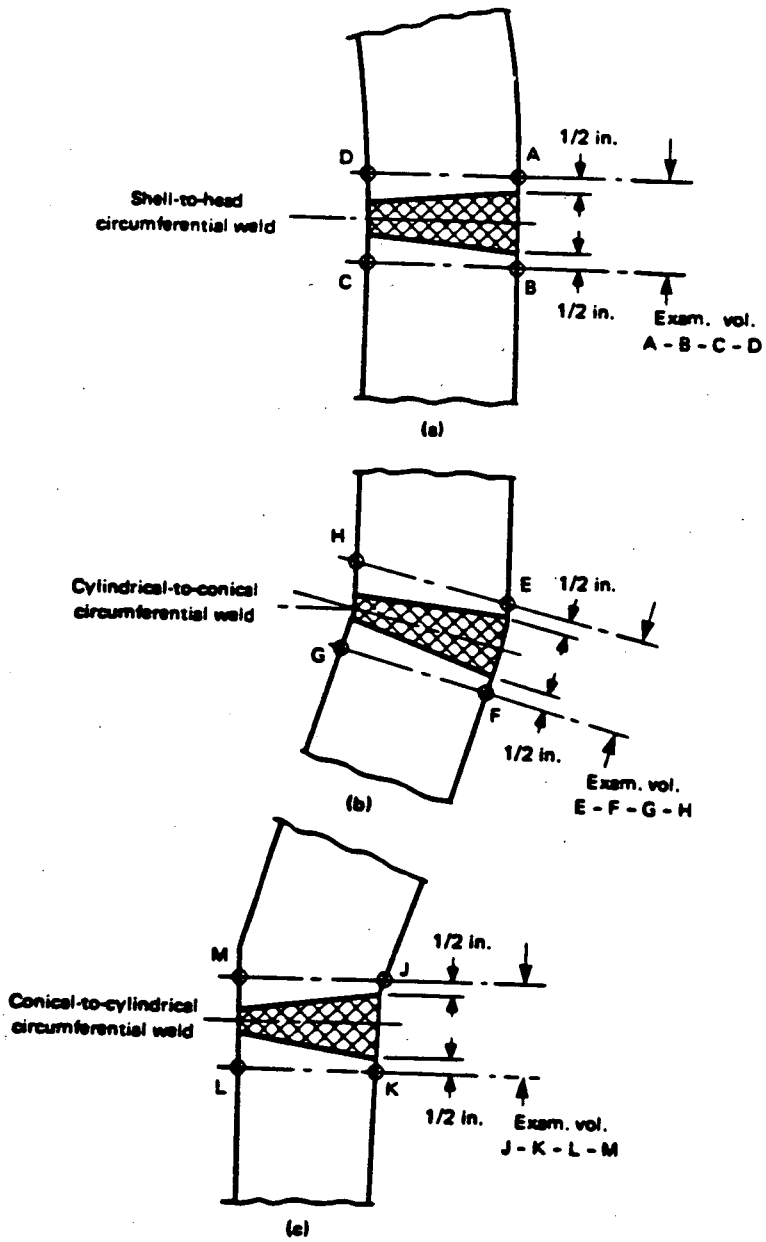

FIG. IWC-2500-1 VESSEL CIRCUMFERENTIAL WELDS

Reference: Section XI 1983 Edition Page 132

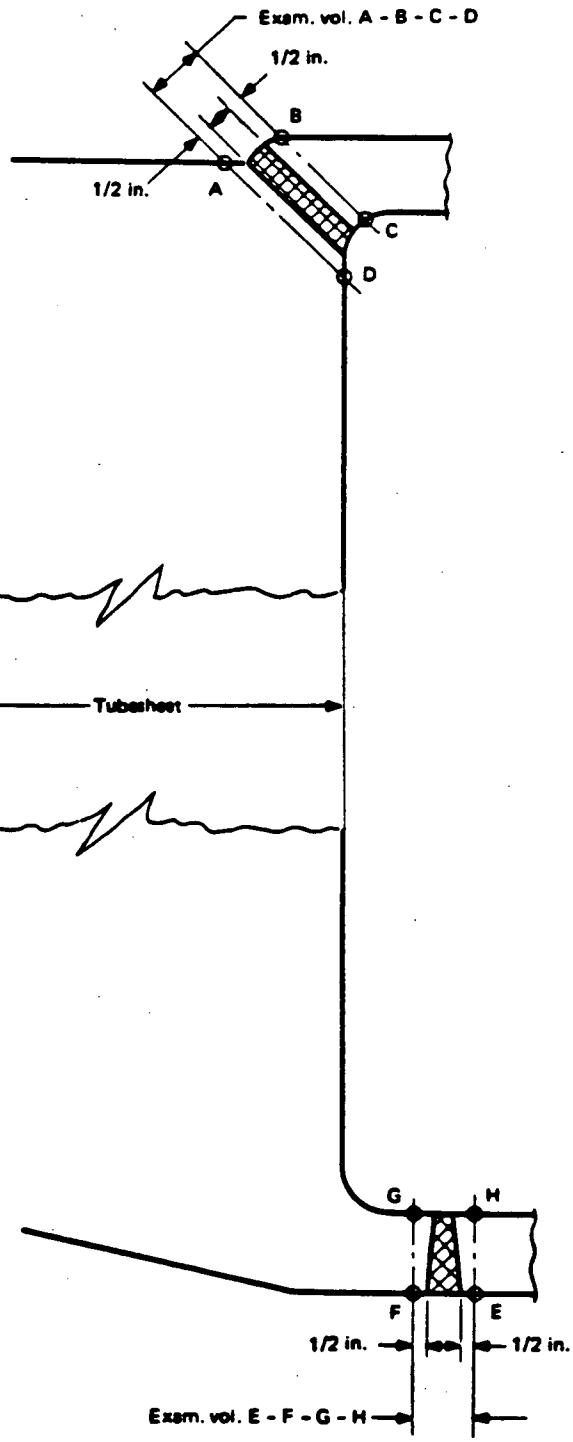

FIG. IWC-2500-2 TYPICAL TUBESHEET-TO-SHELL CIRCUMFERENTIAL WELDS
(Steam Generator Designs)

Reference: Section XI 1983 Edition Page 133

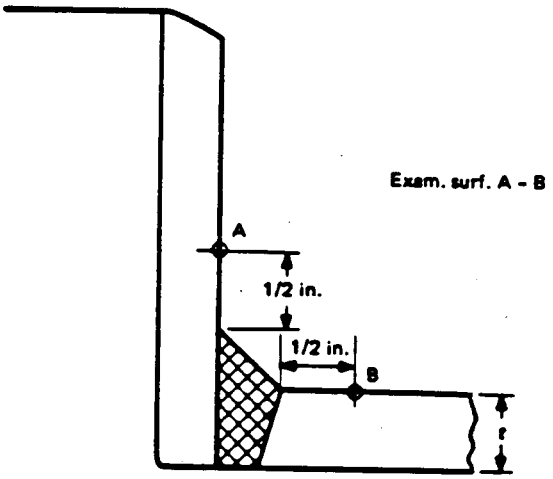

(a)

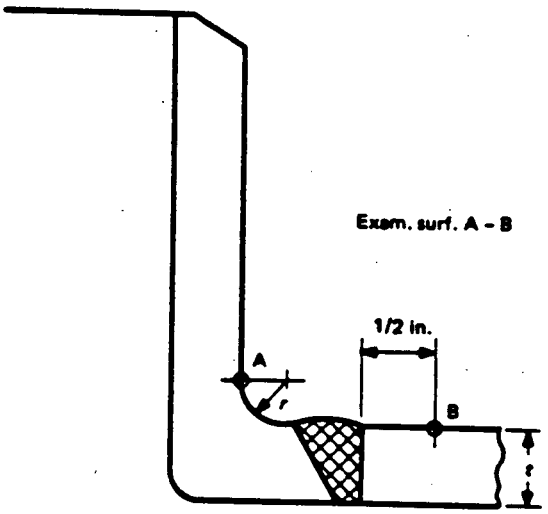

(b)

GENERAL NOTE:
Nozzle sizes over 4 in. NPS; vessel thickness $t < 1/2$ in.

FIG. IWC-2500-3 NOZZLE-TO-VESSEL WELDS

Reference: Section XI 1983 Edition Page 134

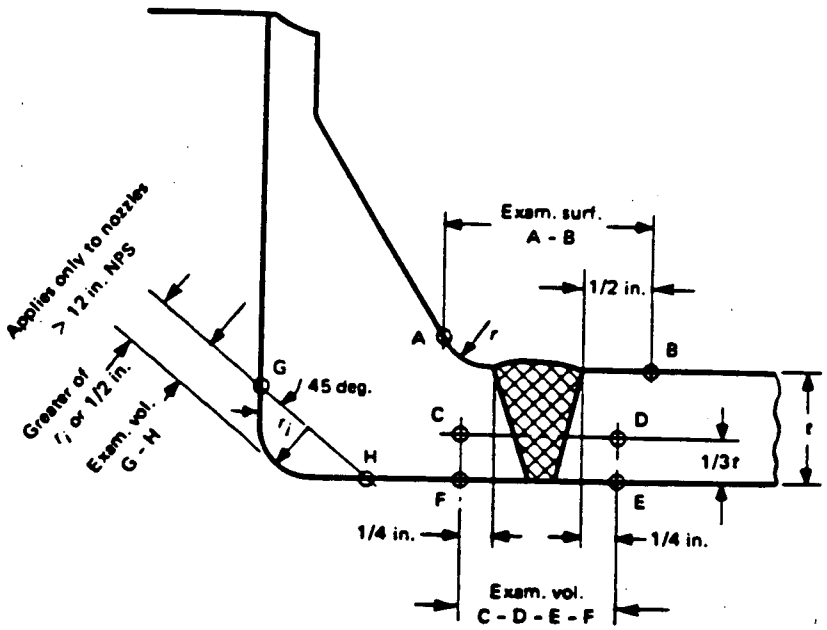

(a)

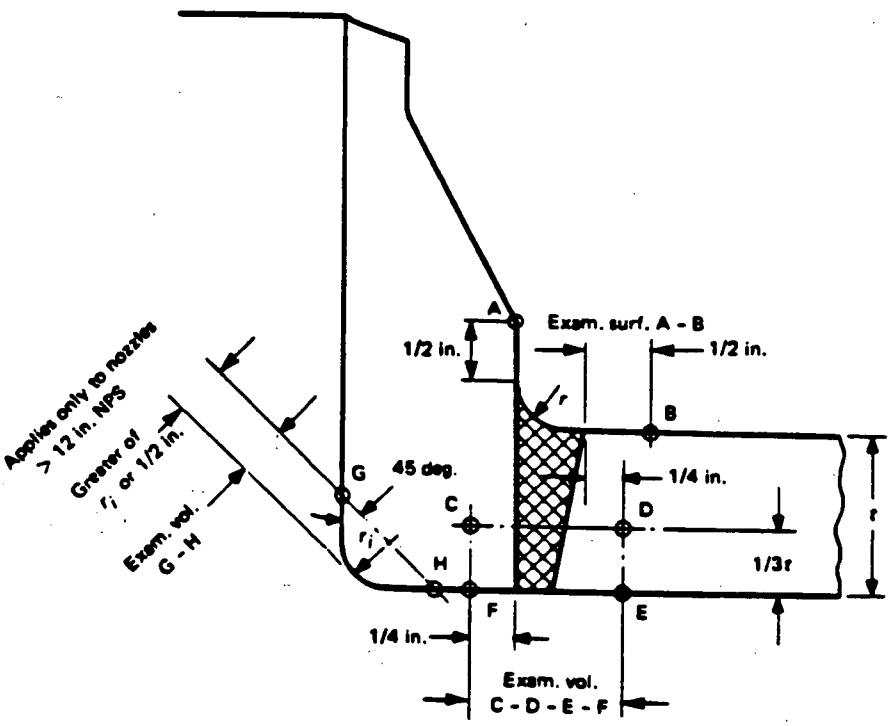

(b)

GENERAL NOTE: Nozzle sizes over 4 in. NPS; vessel thickness over 1/2 in.

FIG. IWC-2500-4 NOZZLE-TO-VESSEL WELDS

FORM 464

57

Reference: Section XI 1983 Edition Page 135

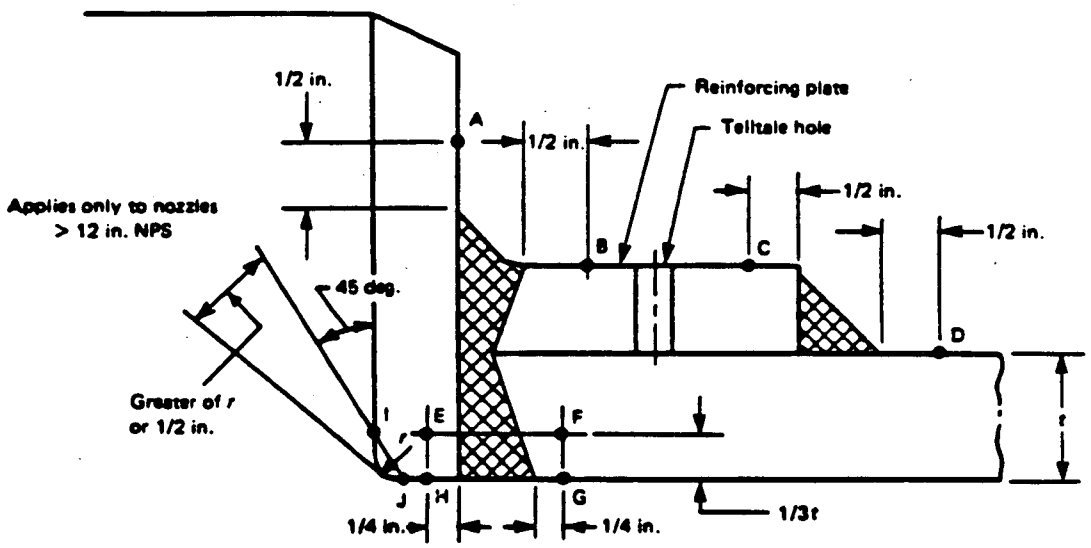

Exam. Surf. A - B and C - D
Exam. Vol. E - F - G - H and I - J

(c)

FIG. IWC-2500-4 NOZZLE-TO-VESSEL WELDS (CONT'D)

FORM 46440

Reference: Section XI 1983 Edition Page 136

FORM 46446

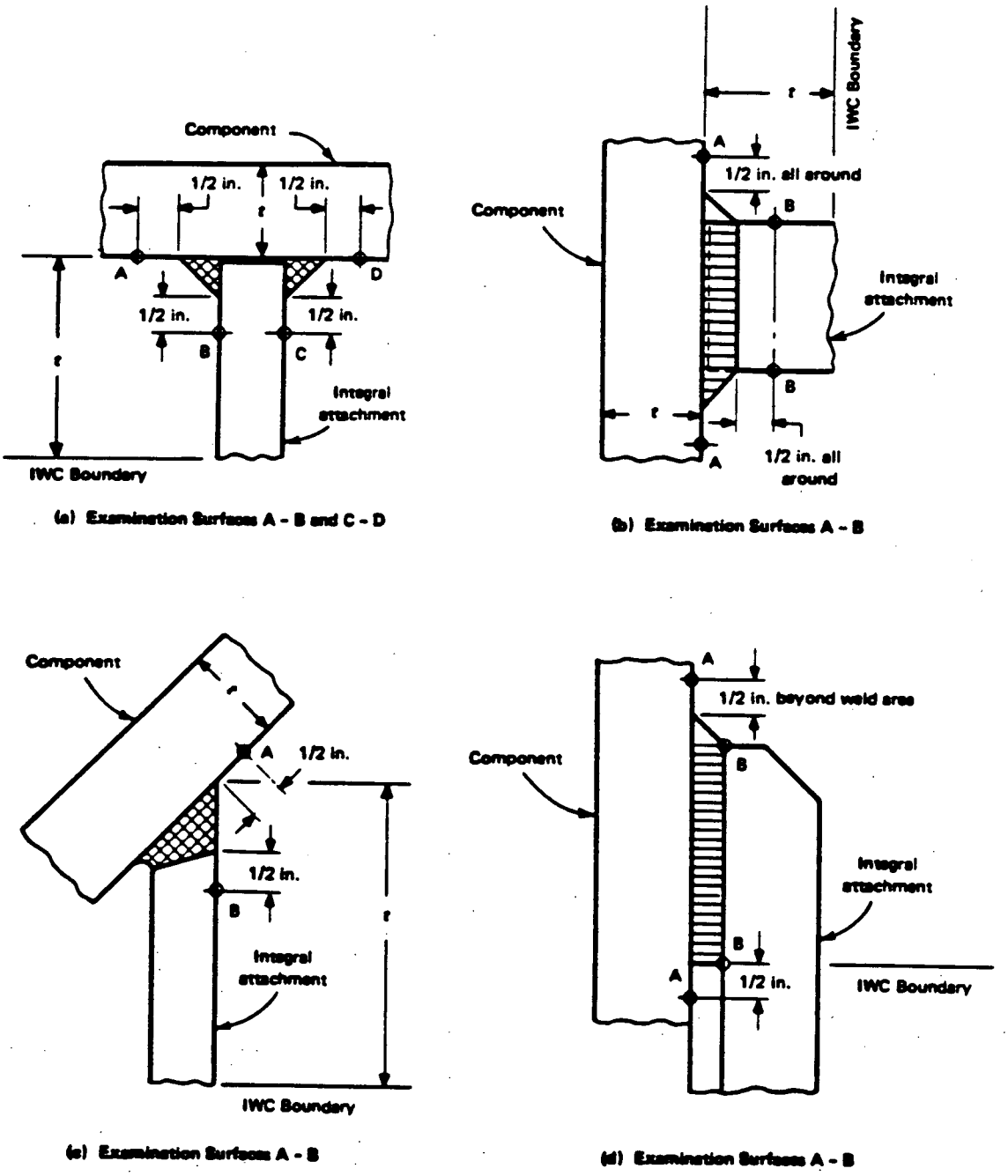

FIG. IWC-2500-5 INTEGRALLY WELDED ATTACHMENTS

Reference: Section XI 1983 Edition Page 137

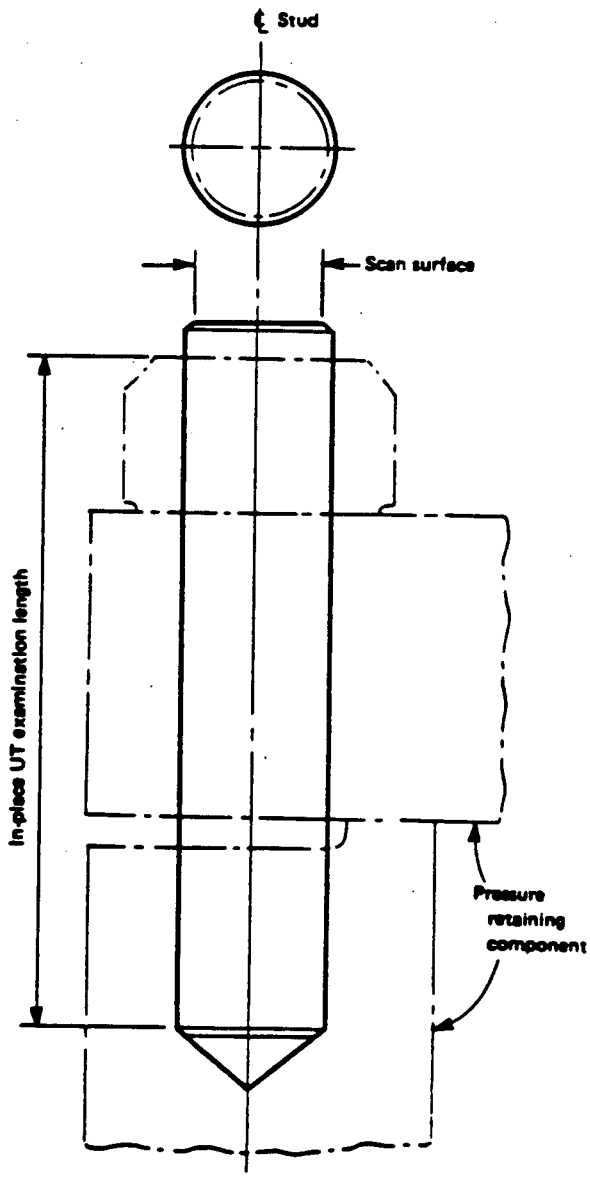

FIG. IWC-2500-6 PRESSURE RETAINING BOLTING

FORM 46446

Reference: Section XI 1983 Edition Page 138

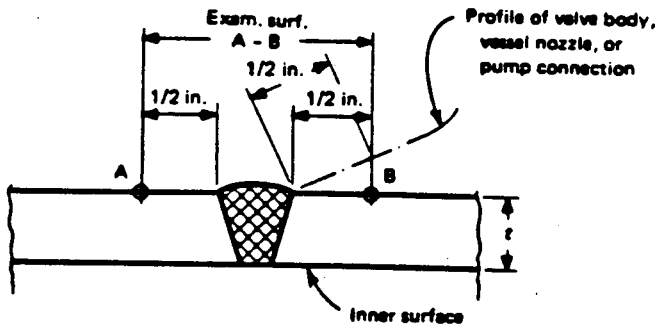

(a) Nominal Pipe Wall Thickness $t \leq 1/2$ in.

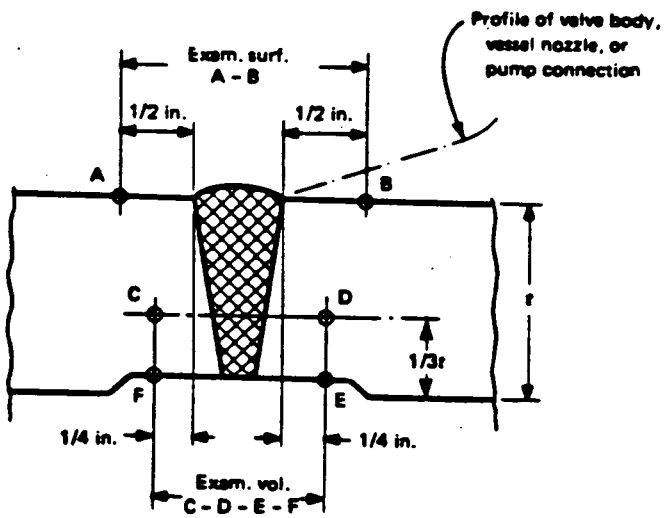

(b) Nominal Pipe Wall Thickness $t > 1/2$ in.

FIG. IWC-2500-7 WELDS IN PIPING

Reference: Section XI 1983 Edition Page 139

FORM 46446

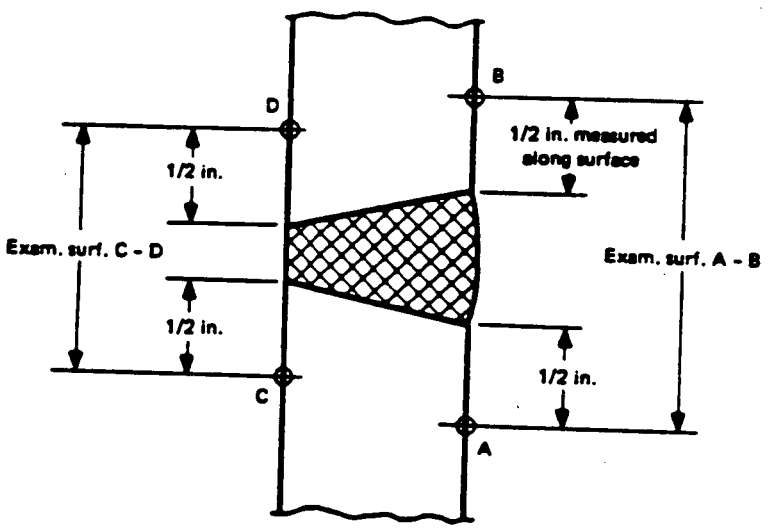

FIG. IWC-2500-8 WELDS IN PUMP CASING AND VALVE BODIES

Reference: Section XI 1983 Edition Page 140

FORM 46444

Examination Surface A - B Around Branch Connection

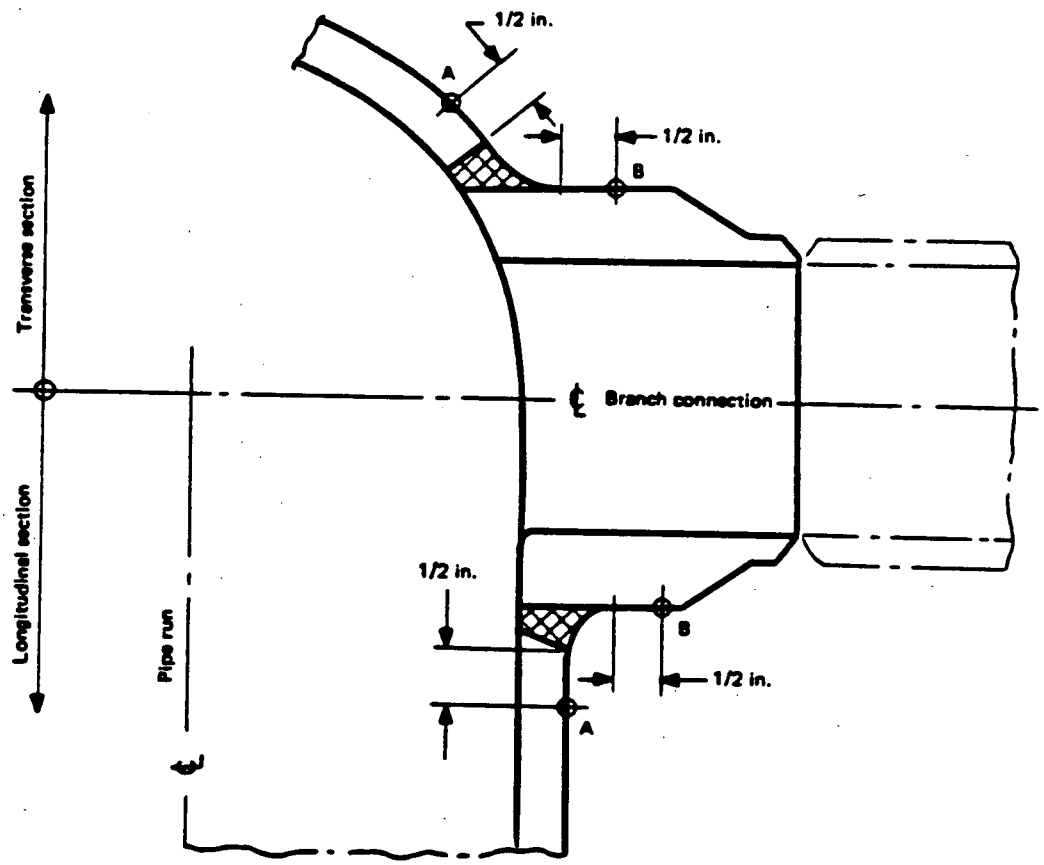

FIG. IWC-2500-9 BRANCH CONNECTION WELDS

Reference: Section XI 1983 Edition Page 141

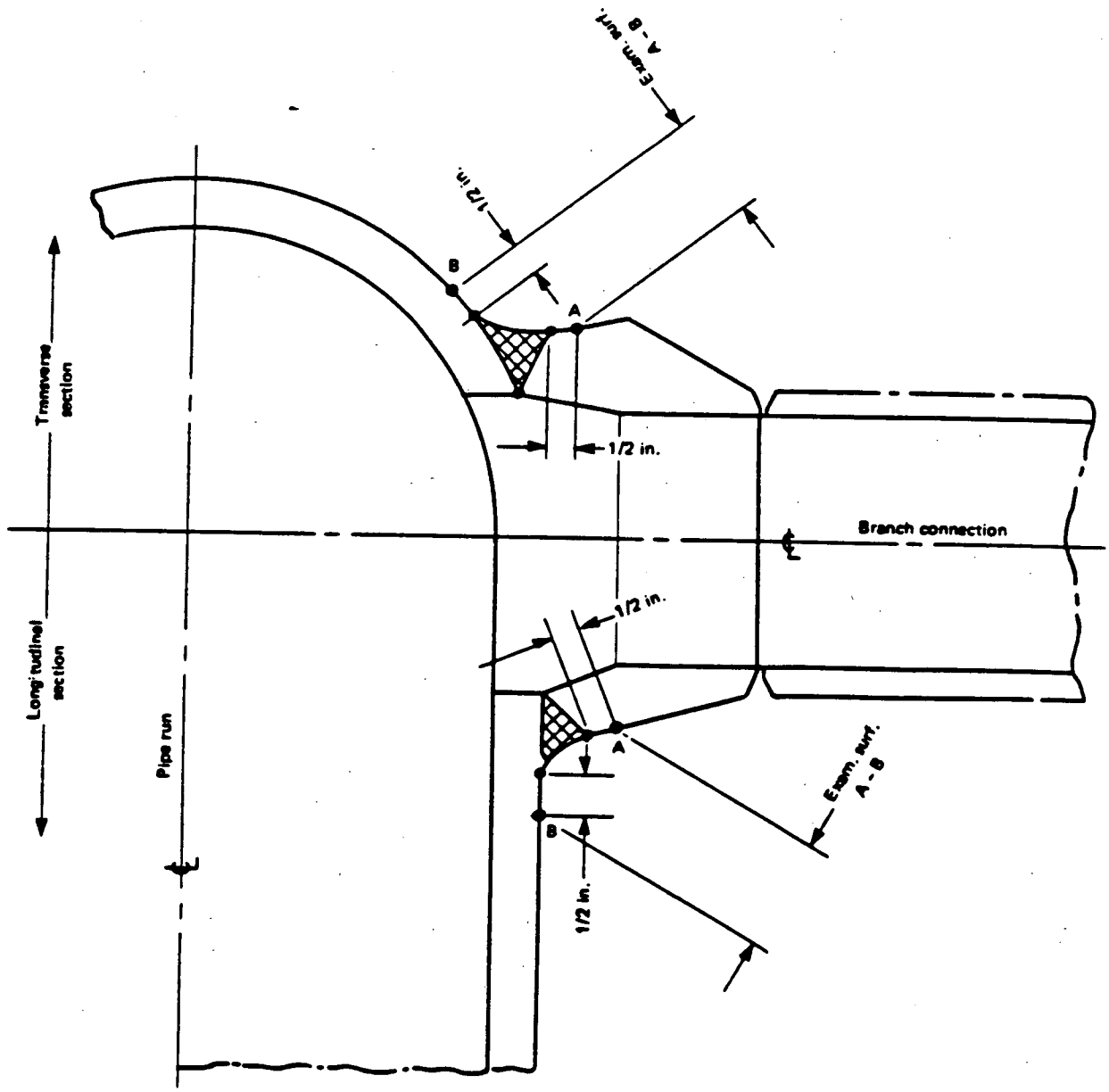

FIG. IWC-2500-10 PIPE BRANCH CONNECTION

FORM 46440

Reference: Section XI 1983 Edition Page 142

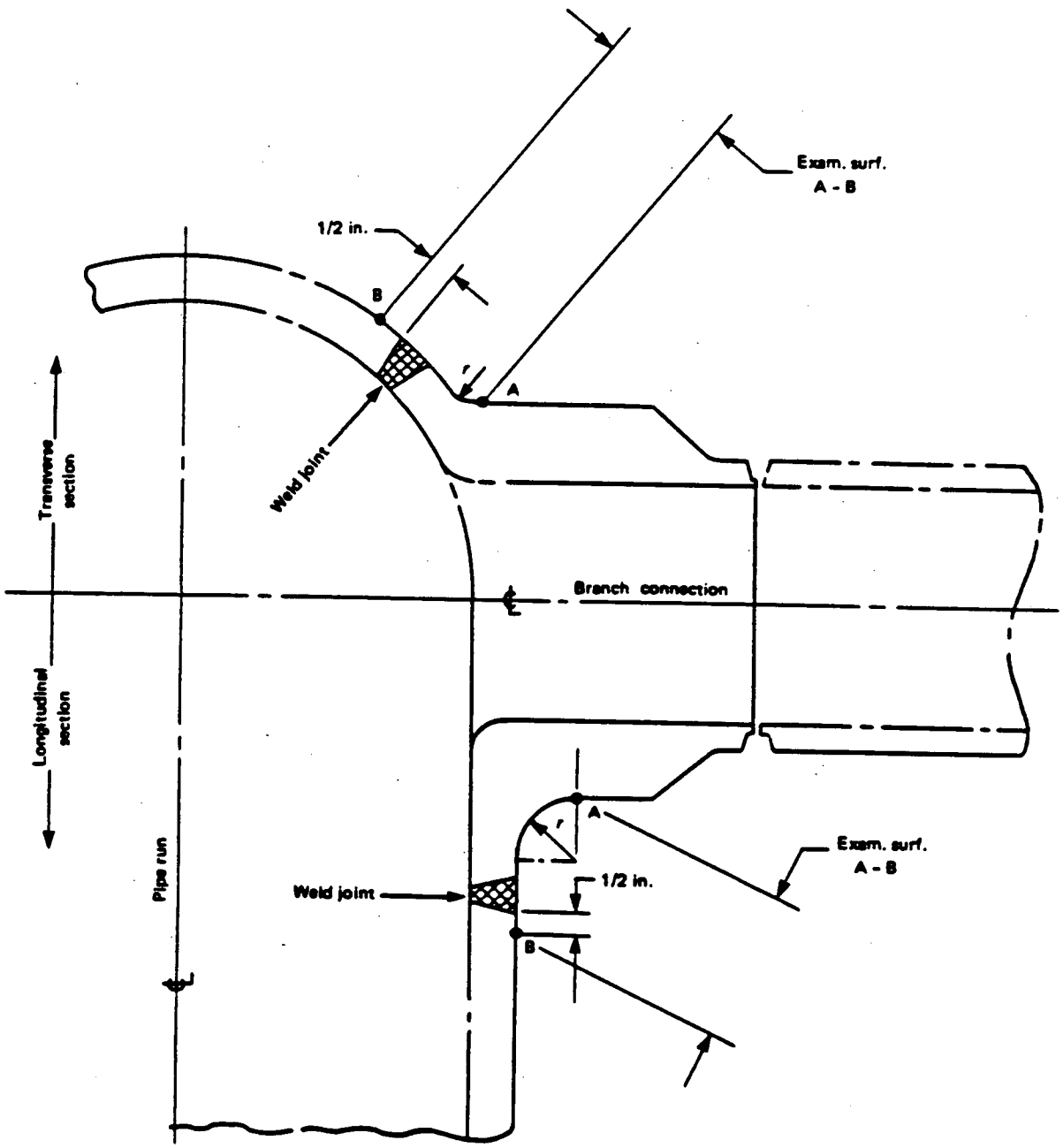

FIG. IWC-2500-11 PIPE BRANCH CONNECTION

FORM 46446

Reference: Section XI 1983 Edition Page 143

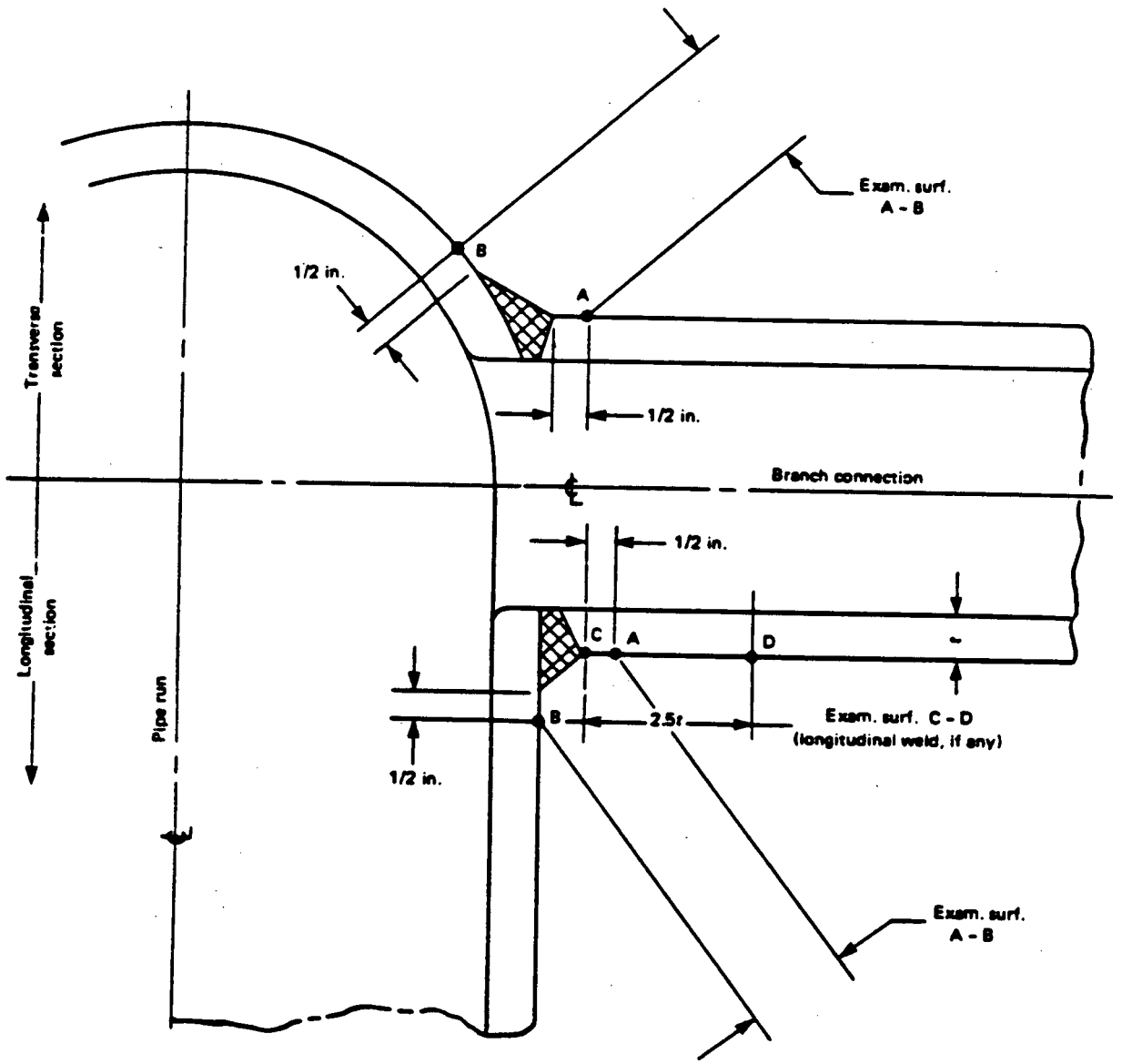

FIG. IWC-2500-12 PIPE BRANCH CONNECTION

Reference: Section XI 1983 Edition Page 144

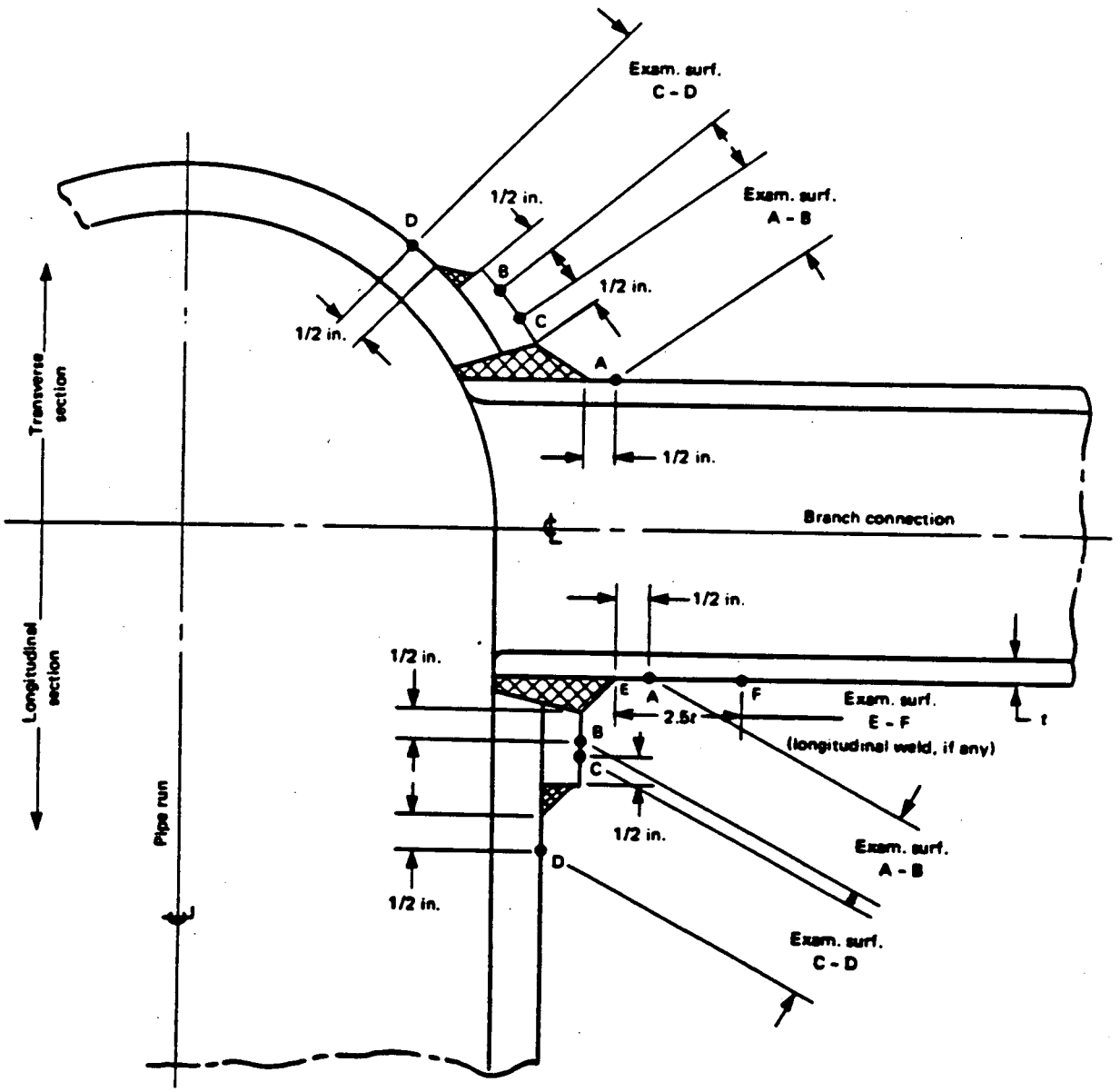

FIG. IWC-2500-13 PIPE BRANCH CONNECTION

FORM 46446

Reference: Section XI 1983 Edition Page 192

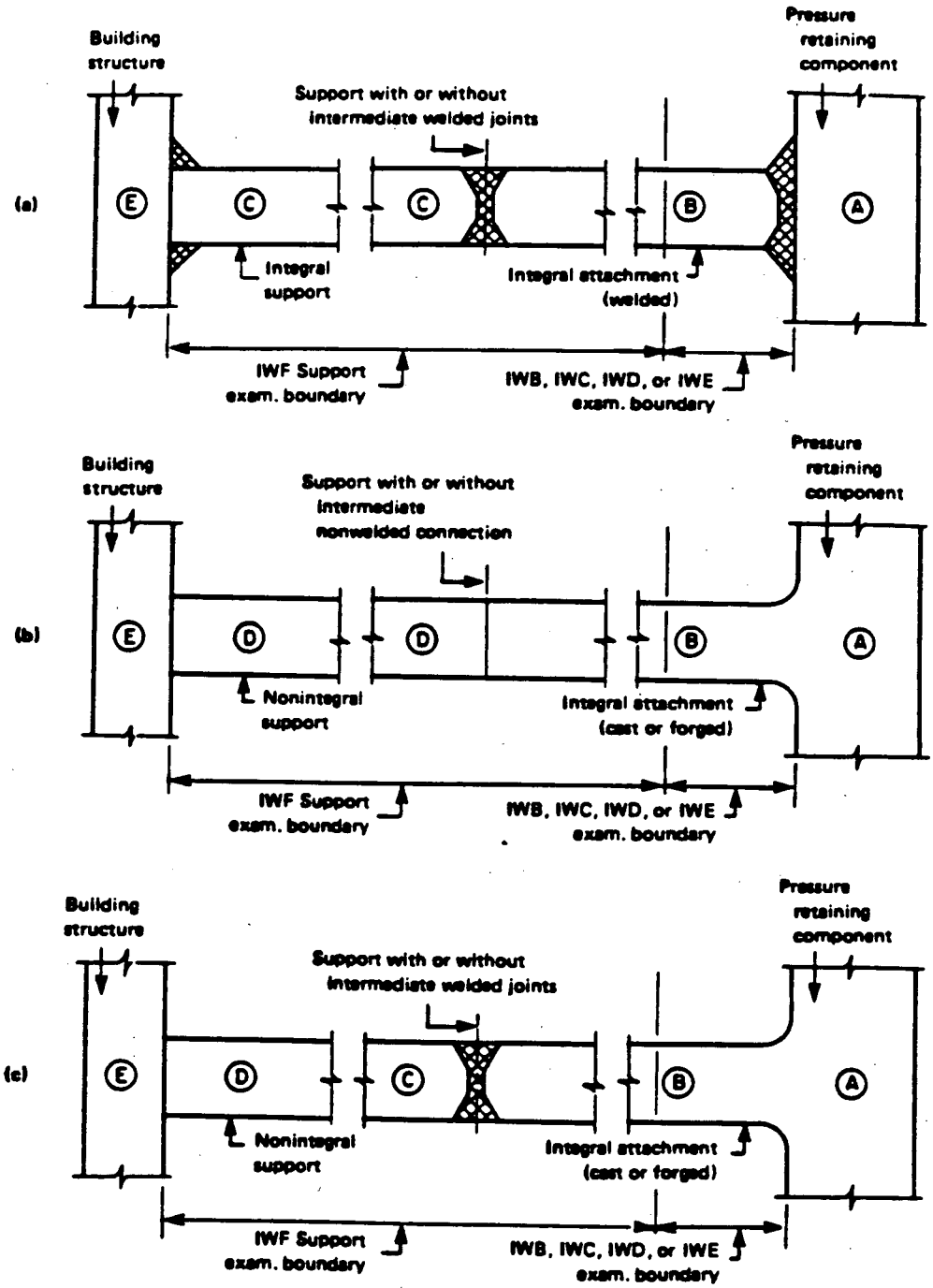

FIG. IWF-1300-1 ILLUSTRATIONS OF TYPICAL SUPPORT EXAMINATION BOUNDARIES

Reference: Section XI 1983 Edition Page 193

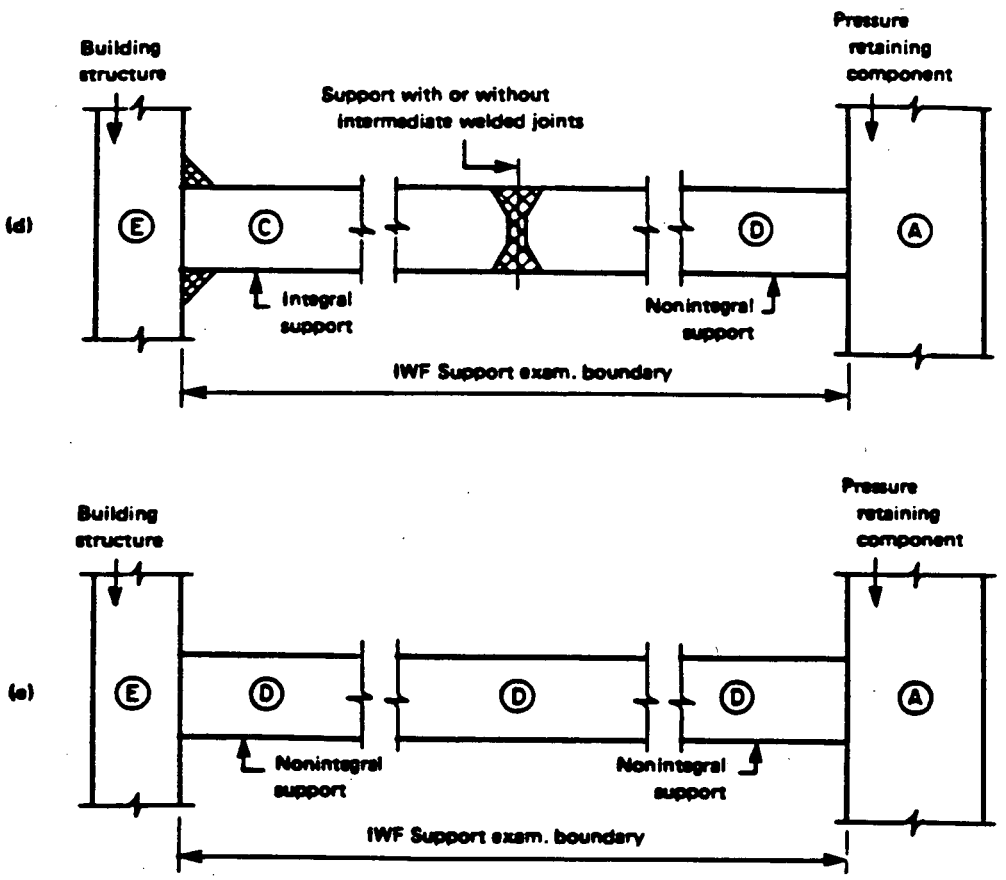

FIG. IWF-1300-1 ILLUSTRATIONS OF TYPICAL SUPPORT EXAMINATION BOUNDARIES (CONT'D)