BROOKHAVEN NATIONAL LABORATORY
ASSOCIATED UNIVERSITIES, INC.
Upton, Long Island, New York 11973
(516) 282-7771
FTS 666-

March 2, 1987

Mr. Roy Woods
U.S. Nuclear Regulatory Commission
Reactor Safety Issues Branch
Division of Safety Review & Oversight
Phillips Building
7920 Norfolk Ave., MS-244
Bethesda, Maryland 20814

Dear Mr. Woods:

Re: FIN A-3829, Interfacing Systems LOCA at PWRs

Enclosed is a draft letter report covering additional work in the ISL Root Cause Analysis (Task 2B) and Core Damage Frequency Calculations (Task 3B).

Sincerely,

G. Bozoki
Risk Evaluation Group

GB/dm/1-rpt.
Enc.
cc: R. Fitzpatrick
P. Kohut
W. Kato
W. Pratt

INTERFACING SYSTEMS LOCA AT PWRs

TASKS 2B AND 3B

DRAFT LETTER REPORT

G. Bozoki, P. Kohut

March 1987

DRAFT

Risk Evaluation Group
Department of Nuclear Energy
Brookhaven National Laboratory
Upton, New York 11973

Prepared for
U.S. Nuclear Regulatory Commission
Washington, DC 20555
Contract #DE-AC02-76CH00016
FIN A-3829

4. INITIATOR FREQUENCIES OF ISLs FOR VARIOUS PATHWAYS IN REPRESENTATIVE PWR PLANTS

4.1 General

The determination of the initiator frequencies of ISL on various pathways identified in Section 2 (of our previous letter report) is one of the most important part of our ongoing study of Interfacing Systems LOCA at PWRs. This section describes

a) the approach applied for modelling of the initiator frequencies,

b) the initiator models, the valve failure modes involved and the ways how they are acted upon by testing, and

c) the new frequency estimates for some valve failure modes (in Appendix B) and the quantification of the models.

4.2 Basic Approach

Originally, in modelling of the ISL initiators two possibilities were considered; to use Markovian or a simplified model. The Markovian model includes all the conceivable failure modes of the valves (e.g., design and installation errors, etc.), their change by the passage of time (e.g., aging) and how they are acted upon by testing, surveillance, operating and maintenance procedures and practices.

The simplified model considers the basic mechanism of accident initiation and includes only the most important failure modes of the valves, without their time dependence and makes drastic simplifications about the effect of testing, surveillance, operating and maintenance procedures and practices. While the natural wish of the analysts and their peers worked for the Markovian approach, it became clear that within the present time scale and supporting conditions one cannot pursue that line. Thus, for the present study, the simplified approach is chosen.

According to this approach, similar pathways of the representative plants were grouped together. A generic model is worked out for the group. Then, the generic model is adapted to describe plant specific features of the pathways. The method allows to compare the effects of these features among the plants studied or with other plants having similar interfacing pathways.

4.3 Determination of Initiator Frequencies

4.3.1 Modelling of Multiple Failures for Valves in Series

This section discusses a generic failure model of valves (check valves or MOVs) in series. The model describes the basic mechanism of accident initiation of most of the pathways identified in Section 2 of our previous letter report. The formulae obtained can be adapted and evaluated easily under the test and surveillance conditions of a specific plant. Three valve configurations, a two-, a three-, and a four-unit system are analyzed.

a. Two-Valve in Series

Consider two valves in series. The valves are denoted by 1 and 2. Valve 1 is assumed to be the first isolation valve of interfacing systems. The failure frequency of the events, when both valves fail, can be written as:

$$\lambda_s(1,2) = \lambda(1)P(2|1) + \lambda(2)P(1|2) \equiv X_1 + X_2 , \qquad (1)$$

where $\lambda(1)$ and $\lambda(2)$ are the independent, random failure frequencies of valves 1 and 2, respectively.

$P(2|1)$ and $P(1|2)$ denote the conditional probabilities that valve 2 fails, given valve 1 failed and valve 1 fails, given valve 2 failed, respectively.

The conditional probabilities include both independent, random and demand type failures.

X_1 and X_2 denote the frequencies of failure combinations of two valves starting with failure of valves 1 or 2, respectively.

It is easy to see that external conditions like presence or absence of RCS pressure in the space between the valves may significantly influence the "innate" failure rates and conditional probabilities of the valves. Its effect can be evaluated if, according to the notation of conditional probabilities, expression (1) is written in the following form:

$$\lambda_s(1,2)=[\bar{p}(X_1|\bar{p}) + p(X_1|p)] + [\bar{p}(X_2|\bar{p}) + p(X_2|p)] \ , \qquad (1a)$$

where p is the probability that the space between the valves is pressurized by the RCS, and $\bar{p}=1-p$.

Since, $\bar{p}=1-p$, expression (1a) also can be written as:

$$\lambda_s(1,2)=(X_1|\bar{p}) + p[(X_1|p) - (X_1|\bar{p})] + (X_2|p) + p[(X_2|p) - (X_2|\bar{p})]. \qquad (1b)$$

The formula can be simplified by considering that the term, $(X_2|\bar{p})$ is small compared to the other terms, since it describes failure rate and conditional probabilities when the second valve is not exposed to the RCS pressure. Consequently,

$$\lambda_s(1,2)\approx(X_1|\bar{p}) + p[(X_1|p) - (X_1|\bar{p})] + p(X_2|p). \qquad (1c)$$

If the second valve is exposed to the RCS pressure the failure rate and conditional probabilities are very similar to those related to the first valve, when there is no pressure in the space between the valves, i.e., $p(X_2|p)\approx p(X_1|\bar{p})$.

Therefore:

$$\lambda_s(1,2)\approx(X_1|\bar{p}) + p(X_1|p) \ . \qquad (1d)$$

The valve 1, in a state when its both sides are exposed to the RCS pressure, is expected to have smaller failure rate than in a state, when only its outer side is under RCS pressure. Thus, $(X_1|p)\leq(X_1|\bar{p})$ and the formula (1d) can be approximated as:

$$\lambda_s(1,2) \leq (X_1|\overline{p})(1+p). \tag{1e}$$

The probability that the space between the valves is pressurized can be taken to be quite high (~1.0) because small leaks through valve 1 very quickly pressurize the space. Therefore, the failure frequency of two valves in series is:

$$\lambda_s(1,2) \leq 2(X_1|\overline{p}) \equiv 2\lambda(1)P(2|1) \ . \tag{2}$$

It is interesting to notice that the result is the same as if in Eq. (1) "symmetry" would be assumed, i.e., $\lambda(1)P(2|1) = \lambda(2)P(1|2)$. However, by referring simply to symmetry, the whole physical process would have been covered up.

The next step in the analysis is to evaluate the term $\lambda(1)P(2|1)$ by a simple multiple sequential failure model. The model introduces a chronological time ordering between the valve failures; the failure of valve 2 cannot proceed the occurrence of the failure of valve 1. The "innovation" in the model is the simultaneous treatment of random and demand type failure modes.

Let λ_1 and λ_2 denote the random type failure frequencies of valves 1 and 2, respectively. Let λ_d denote the demand type failure rate of valve 2. Then, the probability of "simultaneous" failure of two valves over a time interval t can be calculated by the following integral (exponentials are approximated by first order terms):

$$Q_{12} = \int_0^t \lambda_1 dt' \left(\int_{t'}^t \lambda_2 dt'' + \lambda_d \right) \tag{3}$$

$$= \frac{\lambda_1 \lambda_2 t^2}{2} + \lambda_1 \lambda_d t$$

(Note, that replacing λ_d by a beta factor, β, one arrives at an expression similar to the classical common mode failure formula. In sequential systems,

the demand failure mode is similar to a β factor. Indeed, the time interval between a failure causing a demand and the second failure can be infinitely small. In this sense, two subsequent failures are equivalent with two really simultaneous failures. That is the reason why the common mode failure is not explicitly indicated in this simple model.)

Expression (3) is used to derive the failure (or hazard) rate for two valves:

$$\lambda'_{12}(t) = \frac{-1}{(1-Q_{12})} \frac{d}{dt} [1-Q_{12}], \tag{4}$$

$$= \frac{1}{1-Q_{12}} \frac{d}{dt} Q_{12} \approx \frac{d}{dt} Q_{12}, (Q_{12} << 1), \tag{4a}$$

$$= \lambda_1 \lambda_2 t + \lambda_1 \lambda_d. \tag{4b}$$

The average failure rate over a time period, T is given by

$$\langle \lambda'_{12} \rangle = \frac{1}{T} \int_0^T \lambda'_{12}(t) dt \tag{5}$$

$$= \frac{\lambda_1 \lambda_2 T}{2} + \lambda_1 \lambda_d \tag{5a}$$

By equating the term, $\lambda(1)P(2|1)$ to the average failure rate, $\langle \lambda'_{12} \rangle$, the the average failure frequency of two valves in series (see Eq. (2)) over a time period, T, is given by:

$$\langle \lambda_S^T(1,2) \rangle \leq 2 \langle \lambda'_{12} \rangle = \lambda_1 \lambda_2 T + 2\lambda_1 \lambda_d \ . \tag{6}$$

If $\lambda_1 \approx \lambda_2$, one arrives at the expression:

$$\langle \lambda_S^T(1,2) \rangle = \lambda_1^2 T + 2\lambda_1 \lambda_d. \tag{7}$$

This expression is used in some further applications.

DRAFT

b. Three-Valve in Series

Consider now a configuration of three valves (1,2,3) in series. Again, valve 1 is assumed to be the first isolation valve. The failure frequency of the events, when three valves fail is:

$$\begin{aligned}\lambda_s(1,2,3) = {} & \lambda(1)P(2|1)P(3|12) + \lambda(2)P(1|2)P(3|21) + \\ & \lambda(1)P(3|1)P(2|13) + \lambda(2)P(3|2)P(1|23) + \\ & \lambda(3)P(1|3)P(2|31) + \lambda(3)P(2|3)P(1|32),\end{aligned} \tag{8}$$

where $\lambda(1)$, $\lambda(2)$, $\lambda(3)$ are the independent random failure frequencies of valves 1, 2, and 3, respectively.

$P(2|1)$ denotes the conditional probability that valve 2 failed given valve 1 failed. Similar terms denote similar events.

$P(3|12)$ is the conditional probability that valve 3 failed given valves 1 and 2 failed. Similar terms denote similar events.

The conditional probabilities describe both independent, random and demand type failures.

It is easy to see, RC pressure can be now not only in the space between valves 1 and 2, but also in the space between valves 2 and 3 if both valves, 1 and 2, fail. The pressure will affect the "innate" failure frequencies and probabilities of the valves. The possible number of pressure states of the inter-valve spaces are:

- 2 combinations of "non-pressurized spaces,"
- 1 combination, when the space between valves 1 and 2 is pressurized (the space between valves 2 and 3 cannot be pressurized before the preceding space is not pressurized), and
- 1 combination when both spaces are pressurized.

The total number of states are 4.

Each of the terms of Eq. (8) can be now expressed as "conditional" on the presence or absence of each of the four states. The process yields 6x2x4 = 48

terms. Most of the terms can be eliminated by physical considerations. After the elimination process, Eq. (8) can be written as

$$\lambda_s(1,2,3) \leq 6\lambda(1)P(2|1)P(3|12) \ . \tag{8a}$$

The result could be obtained also by symmetry consideration from Eq. (8) by substituting the first term for all the others. Obviously, the result is conservative.

The next step is to evaluate the frequency $\lambda(1)P(2|1)P(3|12)$ by a sequential model involving random and demand type failure modes.

Let λ_1, λ_2, and λ_3 denote the random type failure frequencies of valves 1, 2, and 3, respectively. Let λ_{d2} and λ_{d3} denote the demand type failure frequencies of valves 2 and 3, respectively. Then the probability of simultaneous failures of three valves over a time interval t can be calculated by the following integral (exponentials are approximated by first order terms):

$$Q_{123} = \int_0^t \lambda_1 dt' \left\{ \int_{t'}^t \lambda_2 dt'' \left[\int_{t''}^t \lambda_3 dt'' + \lambda_{d3} \right] + \lambda_{d2} \left[\int_{t''}^t \lambda_3 dt'' + \lambda_{d3} \right] \right\} =$$

$$= \frac{\lambda_1\lambda_2\lambda_3 t^3}{6} + \frac{\lambda_1\lambda_2\lambda_{d3}t^2}{2} + \frac{\lambda_1\lambda_{d2}\lambda_3 t^2}{2} + \lambda_1\lambda_{d2}\lambda_{d3}t \ . \tag{9}$$

The failure (hazard) rate is:

$$\lambda'_{123}(t) = \frac{d}{dt} Q_{123} = \frac{1}{2}\lambda_1\lambda_2\lambda_3 t^2 + \lambda_1\lambda_2\lambda_{d3}t + \lambda_1\lambda_{d2}\lambda_3 t + \lambda_1\lambda_{d2}\lambda_{d3} \ . \tag{10}$$

The average failure rate over a time period, T, is given by:

$$\langle\lambda'_{123}\rangle = \frac{1}{T}\int_0^T \lambda'_{123}(t)dt = \frac{\lambda_1\lambda_2\lambda_3 T^2}{6} + \frac{\lambda_1\lambda_{d2}\lambda_3 T}{2} + \frac{\lambda_1\lambda_{d2}\lambda_3 T}{2} + \lambda_1\lambda_{d2}\lambda_{d3} \ . \tag{11}$$

DRAFT

Again, by equating the term $\lambda(1)P(2|1)P(3|12)$ to the average failure rate $\langle\lambda'_{123}\rangle$, the average failure frequency of three valves in series (see Eq. (8)) over a time period, T, is given by:

$$\langle\lambda_S^T(1,2,3)\rangle \leq 6\langle\lambda'_{123}\rangle = \lambda_1\lambda_2\lambda_3T^2 + 3\lambda_1\lambda_2\lambda_{d3}T + 3\lambda_1\lambda_{d2}\lambda_3T + 6\lambda_1\lambda_{d2}\lambda_{d3}. \quad (12)$$

If $\lambda_1 \approx \lambda_2 \approx \lambda_3$ and $\lambda_{d2} \approx \lambda_{d3} \approx \lambda_d$ one arrives at the expression:

$$\langle\lambda_S^T(1,2,3)\rangle \leq \lambda_1^3T^2 + 6\lambda_1^2\lambda_dT + 6\lambda_1\lambda_d^2 . \quad (12a)$$

This expression is used in further applications.

c. Four-Valve in Series

It is easy to show that for four valves in series the failure frequency when four valves fail, can be written as

$$\lambda_s(1,2,3,4) \leq 24\lambda(1)P(2|1)P(3|12)P(4|123) \quad (13)$$

where $\lambda(1)$ is the independent failure frequency of the valves 1, 2, 3, and 4, and $P(2|1)$, $P(3|12)$, and $P(4|123)$ are conditional probabilities describing that a subsequent valve fail given that the preceding valves already failed. The conditional probabilities describe both independent, random, and demand type failures.

The integral which describes the probability of simultaneous failures of four valves over a time interval t is given by:

$$Q_{1234} = \int_0^t \lambda_1 dt' \int_{t'}^t \lambda_2 dt'' \int_{t''}^t \lambda_3 dt'' \left(\int_{t''}^t \lambda_4 dt''' + \lambda_{d4}\right) +$$

$$\int_0^t \lambda_1 dt' \lambda_{d2} \left[\int_{t''}^t \lambda_3 dt'' \left(\int_{t''}^t \lambda_4 dt''' + \lambda_{d4}\right)\right] +$$

$$\int_0^t \lambda_1 dt' \lambda_{d2} \left[\int_{t'}^t \lambda_3 dt'' \left(\int_{t''}^t \lambda_4 dt'' + \lambda_{d4}\right)\right] +$$

$$\int_0^t \lambda_1 dt' \lambda_{d3} \left(\int_{t'}^t \lambda_4 dt'' + \lambda_{d4}\right) = \frac{1}{24} \lambda_1 \lambda_2 \lambda_3 \lambda_4 t^4 +$$

$$\frac{1}{6} (\lambda_1 \lambda_2 \lambda_3 \lambda_{d4} t^3 + \lambda_1 \lambda_2 \lambda_{d3} \lambda_4 t^3 + \lambda_1 \lambda_{d2} \lambda_3 \lambda_4 t^3) +$$

$$\frac{1}{2} (\lambda_1 \lambda_2 \lambda_{d3} \lambda_{d4} t^2 + \lambda_1 \lambda_{d2} \lambda_3 \lambda_{d4} t^2 + \lambda_1 \lambda_{d2} \lambda_{d3} \lambda_4 t^2) +$$

$$\lambda_1 \lambda_{d2} \lambda_{d3} \lambda_{d4} t \ , \qquad (14)$$

where λ_1, λ_2, λ_3, and λ_4 denote the random type failure frequencies of valves 1, 2, 3, and 4, respectively. λ_{d2}, λ_{d3}, λ_{d4} denote the demand type failure frequencies of valves 2, 3, and 4, respectively.

In the same way as it was shown for the two and three valve configurations, the average failure frequency of four valves in series over a time period, T, can be expressed as:

$$\langle \lambda_s^T(1,2,3,4) \rangle \leq \lambda_1 \lambda_2 \lambda_3 \lambda_4 T^3 + 4(\lambda_1 \lambda_2 \lambda_3 \lambda_{d4} T^2 + \lambda_1 \lambda_2 \lambda_{d3} \lambda_4 T^2 + \lambda_1 \lambda_{d2} \lambda_3 \lambda_4 T^2) +$$

$$12(\lambda_1 \lambda_2 \lambda_{d3} \lambda_{d4} T + \lambda_1 \lambda_{d2} \lambda_3 \lambda_{d4} T + \lambda_1 \lambda_{d2} \lambda_{d3} \lambda_4 T) + 24 \lambda_1 \lambda_2 \lambda_{d3} \lambda_{d4} \ . \qquad (15)$$

The formula obtained will be used for valve configurations when $\lambda_1 \approx \lambda_2 \approx \lambda_3$, and $\lambda_{d1} \approx \lambda_{d2} \approx \lambda_{d3} \approx \lambda_d$. For this case Eq. (15) has the following simplified form:

$$\langle \lambda_s^T(1,2,3,4) \rangle \leq \lambda_1^3 \lambda_4 T^3 + 4(\lambda_1^3 \lambda_d T^2 + \lambda_1^2 \lambda_d \lambda_4 T^2 + \lambda_1^2 \lambda_d \lambda_4 T^2) + 12(2 \lambda_1^2 \lambda_d^2 \lambda_4 T) +$$

$$24 \lambda_1 \lambda_d^3 \ . \qquad (15a)$$

4.3.2 Calculation of Initiator Frequencies for Accumulator, LPI, and HPI Pathways

At the majority of PWRs the LPI injection lines have a common inlet header to the RCS with the accumulator outlet lines. At PWRs of Westinghouse and Combustion Engineering designs this inlet header is even shared with the HPI system. At PWRs of Babcock and Wilcox design the HPIS injects to the reactor vessel via separate lines.

In all previous analyses of ISLs through the LPI (or HPI) lines the effect of the common inlet header was not taken into consideration. The ISL initiator frequencies were estimated assuming the LPI pathways to be independent from the accumulator system.

A thorough analysis of the check valve failure events occurring in the LPI, accumulator injection lines (see Appendix B for details) revealed the fact that the second (downstream) check valve in accumulator injection lines is rather prone to "failure to operate upon demand"(i.e., to non-complete seating) failure mode. The proneness to failures of this type is due to the combined effects of boric acid corrosion, boron deposition, and the valve being in a "see-saw" position between two overpressurized regions each of them subject to many pressure changes. Since the valve frequently falls in the "failed state," it behaves as a "kind of safety valve" with respect to the overpressurization of the common inlet header. Namely, whenever the first (upstream) isolation check valve to the RCS leaks (or in the worst case ruptures), in the majority of the cases, the second check valve will not prevent completely the propagation of the leakage (or pressure wave) to the accumulators.

Based upon the results of the check valve failure analysis, it was concluded, that in any study of ISLs going through the common injection inlet pathways, the proneness of accumulators second check valve to "failure to operate upon demand," failure mode has to be taken into account. It was inferred that depending upon the state, this check valve (whether it is seated or not) and the rate of the backflow through the first check valve the nature

and frequency of ISLs through the LPI/HPI pathways will be significantly different.

a) If the valve is seated, there will be no "relief valve" effect. ISLs through the LPI/HPI pathways, even with moderate leak rate ($\leq$ 1000 gpm) will contribute to core damage and public health risk.

b) If the valve is open, the preferred direction of the ISLs will be through the accumulator and not through the LPI/HPI pathways. Should an ISL with small or moderate leak rate ($\leq$ 1000 gpm) still occur through these pathways, it will lead only to harmless overpressurization of low pressure piping. Since the accumulators are constantly monitored small leaks through the first check valve will have high potential for discovery and preventive actions.

   In the case of an ISL with high leak rate (check valve ruptures) the open accumulator check valve will cause an additional internal LOCA. Despite the increased confusion in the accident management, it will have the beneficial effect that it will turn large part of the RCS inventory available for recirculation. The advent of core damage will be delayed and public health risk will be decreased.

Thus, in the following calculations of ISL initiator frequencies both effects the "safety valve" effect of the accumulator check valve and the effect of the leak rate have been considered.

For lines having not shared inlets to the RCS, the initiator frequencies are calculated by considering the leak flow rate dependency of the leakage failure frequency of check valves. The leak rate dependency of the leakage failure frequency is described in Appendix B.

4.3.2.1 ISL Initiator Frequencies for Accumulator Pathways

In order to determine the ISL initiator frequencies for the accumulator pathways the exceedance frequency per year of experienced accumulator inleakage events (see also Section B.1.3) is plotted as a function of leakage

flow rate through the accumulator injection lines. The plot is shown in Figure 4.1. The curve is fitted graphically with a straight line (on a log-log scale). A statistical estimate based on experienced event frequencies and assuming lognormal frequency distribution provided an average range factor of RF=10 for the curve. By using this range factor an other exceedance frequency per hour curve is constructed which represents mean values. The curve describing mean values can be taken now as a direct source to estimate ISL initiator frequencies.

The application of straight line fit for the observed values is supported by the generic experience, that "percolation type" physical processes, like leakage through two subsequent openings follows exceedance frequency distribution of Pareto type (i.e., a kind of power low).

To estimate ISL initiator frequencies for specific plant by using the curve, the most important parameter is to choose the appropriate leak flow rate value at which the estimate is carried out. For that purpose a reasonable choice is that leak flow rate, which fills up the "free volume" of the accumulators within a "critical time" deemed to be required for operator actions to treat safely an accumulator inleakage. Table 4.1 presents the free volumes of the accumulators for the selected PWRs. The table also shows some other relevant design characteristics of the accumulators for convenience. Table 4.2 lists the filling time of the free volumes for various leak rates. (The filling times presented in the table are conservative because it does not take into account the delay in the filling due to the compression of the N_2 gas.) As critical time, 10 minutes is selected for all the plants. This time is deemed to be long enough, for the operator to respond for the specific accumulator alarms (high pressure, high level) to take successful corrective actions. Table 4.3 gives the corresponding leak rates and the mean values of the leak rate exceedance frequencies per accumulator line year. The leak rate exceedance frequencies were obtained simply by "read-off" from the curve describing mean values in Figure 4.1.

In order to determine the ISL initiator frequencies from the generic curve, the listed exceedance frequencies should be only a little bit adjusted according to the plant specific parameters and plant specific test or

surveillance conditions. The size of the lines is not important parameter because the experienced curve is based on failure events representing a relatively homogeneous sample of pipe size, 8"-14" diameter.

The value which is directly read off from the curve at an appropriately chosen leak flow rate is essentially Eq. (7) (see also Eq. (1) in Appendix B):

$$\langle\lambda_s^T(1,2)\rangle = 2\lambda_1\left(\frac{\lambda_2 T}{2} + \lambda_{d2}\right) \equiv 2\lambda_1 C \quad , \qquad (7a)$$

where λ_1 is the frequency of leakage failure mode of the first check valve (near the RCS),

λ_2 denotes the same quantity for the accumulator outlet check valve,

λ_d is the frequency of check valve "fail to operate on demand" failure mode, enhanced by the special conditions just explained at the preceding section, and

C=.93 denotes an "effective leakage probability" for the accumulator outlet check valve.

At Indian Point 3 the check valves are leak tested after flow test at each RCS depressurization (~3 times/year). These leak tests are assessed to be 100% efficient for the present calculations. (Sensitivity calculations will be carried out later after all the representative plants have been visited.) Therefore, at Indian Point 3 the exceedance frequency, is not corrected for valve failures to reclose after cold shutdowns.

In contrast with Indian Point, at Oconee 3, leak tests are carried out only in time of nine month intervals. During this time period there are two cold shutdowns. Each cold shutdown creates a potential for additional reclose failures due to check valve demands. The probability that the first check valve "fails to operate (reclose) after demand" is: $\lambda_{d1}^{Mean} = 2.81(-4)$ (see Section B.2.5). Then, the corrections for the exceedance frequency are given by:

$E_A' = \lambda_d C = 2.61(-4)$, due to the first cold shutdown, and

$E_A'' = 2\lambda_d C = 5.22(-4)$, due to the second one.

The total correction per line averaged over the year is:

$$E_A^T = (E_A' + E_A'') = 7.84(-4)/ .$$

The correction is only 10% of the uncorrected value. Its value is presented also in Table 4.3.

The best conditions for failure detection of the first check valve are at Calvert Cliffs 1. The seat leakage of the first valve is continuously monitored with pressure sensors placed in the valve section between the two check valves of the accumulator lines. Thus, there is no need for correction of the exceedance frequency.

Based on the other relevant data in Table 4.3 the total initiator frequencies were calculated for each plant. The values obtained are presented also in Table 4.3.

The total initiator frequencies were determined also at leak rates which just exceeds the relief valve capacities of the accumulators. These frequencies represent the initiator frequencies for overpressurization of the accumulators. The value obtained are shown in the last row of Table 4.3.

The initiator frequencies serve as inputs for the accumulator ISL event tree. The event trees are described in Section 5.

As one notices, the initiator frequencies are relatively high compared to the generic frequency of small LOCA initiators ($\sim 10^{-2}$/year). This is connected with the high frequency of accumulator inleakage events and with their good potential for discovery (see Item (b) in Section 4.3.2).

The initiator frequency valves, (I_A), presented in Table 4.1, serve as inputs for the accumulator ISL event trees. The event trees will be discussed in Section 5.

DRAFT

4.3.2.2 ISL Initiator Frequencies for LPI Pathways

The check valve arrangements on the interfacing LPI lines of the representative plants belong to the following basic configurations:

a. Two check valves and an open MOV. Indian Point 3. (Valve descriptions are given in Tables 2.3.1 and 2.3.4) Number of paths: 4

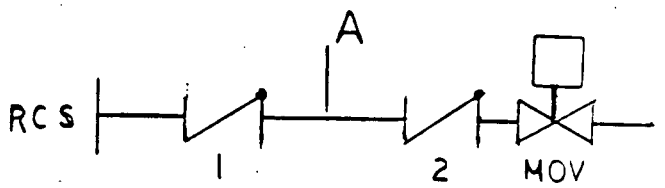

b. Two check valves and a closed MOV. Oconee 3. (Valve description are given in Tables 2.4.1) Number of paths: 2

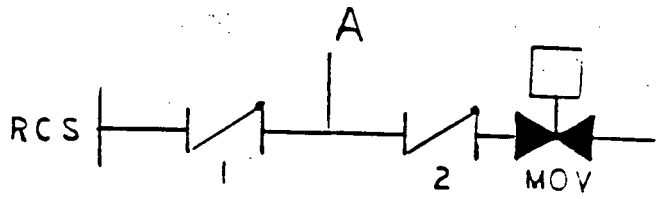

c. Three check valves and a closed MOV. Calvert Cliffs 1. (Valve description are given in Tables 2.5.1 and 2.5.4) Number of paths: 4

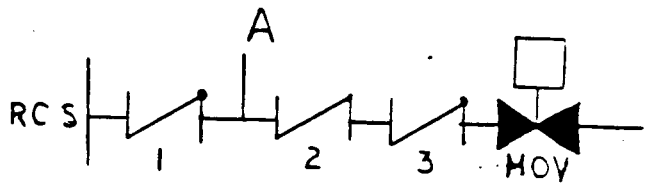

The ISL initiator frequencies for these LPI pathways, I_{LPI}, is calculated by applying

a) the formalism developed in Section 4.3.2,

b) the dependency of the leakage failure frequency on the leak flow rate,

c) the condition that the accumulator check valve is frequently being in the failed state, and

d) the assumptions that ISLs, with leak flow less than the total relief valve capacity of the injection side of the LPI system do not lead to overpressurization of the low pressure piping, but contribute to the small LOCAs, and ISLs with leak flow below the total capacity of the charging system are easily treatable and therefore negligible events.

Before entering into the description of the calculation we reiterate the remark made on the common cause failure behavior of the quantity λ_d in the formalism developed in Section 4.3.2. The formalism does not include terms explicitly identified as accounting for common cause failures of the components. In sequential systems where the system is modelled as combination of operating and standby components, the λ_d represents the demand failure of the standby components. Thus, if there is a combination of an operating and standby component, any failures of both components will occur at the same time because of the way the system is designed, independently from the type of failure of the operating component, whether it is independent or common cause failure. Therefore, it is superfluous to introduce separate terms for common cause failures. It is only required that the numerical value of λ_d should be appropriately selected.

4.3.2.2.1 Calculation of I_{LPI} at Indian Point 3

The formula applicable to calculate the average failure rate of the check valve configurations in the LPI pathways is described by Eq. (6), which is repeated here for convenience.

$$\langle\lambda_s^T(1,2)\rangle = 2\lambda_1\left(\frac{\lambda_2 T}{2} + \lambda d\right) .$$

All the quantities in this equation have been defined earlier.

The formula can be also applied to calculate the average frequency of double check valve failure events which are not accompanied by check valve failure in the accumulator line $(1,2,\overline{A})$. This can be done simply by multiplying the failure frequency (λ_1) of the first check valve by $(1-C)$, where C is "the effective leakage failure probability" of the accumulator outlet check valve. Thus, $\lambda_1(1-C)$ will denote the frequency of the first check valve failures, when the accumulator check valve is closed.

The average frequency of the events $(1,2,\overline{A})$, therefore, can be written as:

$$\langle\lambda_s^T(1,2,\overline{A})\rangle = 2\lambda_1\left(\frac{\lambda_2 T}{2} + \lambda_{d2}\right)(1-C) \equiv \langle\lambda_s^T(1,2)\rangle(1-C) , \qquad (17)$$

and if $\lambda_2 \approx \lambda_1$,

$$\langle \lambda_s^T(1,2,\overline{A}) \rangle = (\lambda_1^2 T + 2\lambda_1 \lambda_{d2})(1-C) \qquad (17a)$$

At Indian Point there are four similar lines and the reactor is at power about 72% of the total time. Thus, the total average frequency of potential ISL initiators with (remember that $C \approx .97$, and $\lambda_1 \approx \lambda_1 C$) and without simultaneous accumulator inleakage will be:

$$I_{LPI}(1,2,A) = .72 \times 4 \times \langle \lambda_s^T(1,2) \rangle \qquad (18)$$

and

$$I_{LPI}(1,2,\overline{A}) = .72 \times 4 \times \langle \lambda_s^T(1,2,\overline{A}) \qquad (18a)$$

$$= .72 \times 4 \times \langle \lambda_s^T(1,2) \rangle (1-C),$$

respectively.

Quantification of I_{LPI} (Indian Point 3)

Expressions (18) and (18a) were evaluated numerically as a function of the leak flow rate through the shared LPI/HPI/Accumulator inlet by using the leakage failure exceedance curve given in Figure B.2 of Appendix B.

By using the curve data as medians, λ_1^{Median}, and by assuming lognormal failure frequency distribution and range factors slowly varying from RF:10 to RF:14 in the leak flow rate interval of 100-2000 gpm, the mean leakage frequency, λ_1^{Mean}, and the expectation of its square $\langle \lambda_1^2 \rangle = (\lambda_1^{Mean})^2 + \text{var.}$, have been calculated (e.g., at leak flow rate of 100 gpm:

$\lambda_1^{Median} = 1.58(-3)/yr$, RF=10, $\lambda_1^{Mean} = 4.20(-3)/yr$, and $\langle \lambda_1^2 \rangle = 1.25(-4)/yr^2$).

The mean frequency of "valve fail to operate on demand" failure mode was taken to be $\lambda_{d2} = 2.81(-4)/\text{demand}$ (see Appendix B.1.2).

At the Indian Point 3 plant the check valve disc being in the open position is precluded by the leak test performed after every cold shutdown. (This is a considered assessment. It is understood, in such a way, that the

check valves are closed as tight as their leak flow is smaller than a limiting flow rate defined in the tech. specs. and test requirements. A survey of the test performances will be discussed later.)

The average time interval between cold shutdown at Indian Point 3 is T=1/3 year.

The results obtained by the quantification are shown in Figure 4.2 to be compared with the results of other plants.

Initiation frequency data at important leak flow rates are also given in Table 4.4. Those values which are selected as inputs for LPI event trees are indicated in the last column of the table.

The first value is the frequency of double check valve failure events without accumulator inleakage where the leak flow rate is larger than the maximum makeup flow (~98 gpm), but less than the total capacity of LPI relief valves at the injection side (740 gpm). These events are not considered to cause overpressurization of the LPI piping, but may result in small LOCA. (Double check valve failure events in this category, which are associated with accumulator inleakage are considered to be mild and negligible.)

The second value is the sum of the frequencies of the following events:

a) Double check valve failure events without accumulator inleakage, where the leak flow rate is larger than the total capacity of LPI relief valves at the injection side. These are considered to cause overpressurization.

b) Double check valve failures with accumulator inleakage, where the leak flow rate at the shared inlet of the LPI/HPI/Accumulator System exceeds the capacity of the LPI relief valves (740 gpm) in spite of the flow diversion to the accumulator.

These events represent the majority of overpressurization events. (The "critical leak flow" was estimated by considering that only a fraction, F of the incoming flow reaches the relief valves. The fraction is equal to the ratio of the cross sections of the LPI and accumulator pipes:

$$F = \left(\frac{6''}{10''}\right)^2 = .36 \ .$$

Thus, the critical flow rate is: $\frac{740}{.36} \approx 2100$ gpm.)

4.3.2.2.2 Calculation of I_{LPI} at Oconee 3

An ISL would occur through an LPI line at Oconee 3 if two check valves and a normally closed MOV were in an "open" failure state. The frequency of these events can be calculated by applying Eq. (12) to the case. At the application, one has to use the appropriate failure modes of both types of valves, check valves, and MOVs and the specific testing policy of the valves. The testing policy of the valves is discussed first.

At Oconee 3, there is a leak testing equipment (a rig) to carry out the ISL tests at nine month intervals. (The efficiency of the test process will be discussed later after having seen the equipment, procedures, and discussion with plant personnel during an oncoming plant visit.) These tests which are intended to verify that the check valves of the ECCS system properly reseat after cold shutdown, are considered to be efficient. However, there are usually two cold shutdowns during the nine month leak testing period when the LPI lines are flow tested and the MOVs are stroked. After cold shutdowns the check valves may be stuck open and also the MOVs may remain in failed state (do not operate on demand), These conditions should be taken into account in the calculation of the initiator frequencies. For calculational simplicity, it is assumed that cold shutdowns are performed in three month intervals. It means that during a nine month period there will be two cold shutdowns with potential of undetected valve reclose failures. Since the initiator frequencies are given on a basis "per reactor year,", the failure model will be evaluated for four time periods of three months long and the results will be summed to obtain the yearly ISL frequency. It is easy to see that

- in the first time period, just after the ISL test (and cold shutdown), there is no need to correct the terms in Eq. (12),
- in the second time period (after a cold shutdown), in addition to the terms in Eq. (12), corrections have to be made for the potentially non-reclosed valves,
- in the third time period (after cold shutdown) the correction is doubled for check valves (the MOV stays the same), and
- the fourth time period is the same as the first because this period begins also after ISL test.

The expressions to be quantified are (based on Eq. (12)):

<u>1st Time Period</u> (0-3 months), t = 1/4 year, T = 3/4 year;

$$t\langle\lambda_s^T(1,2,3)\rangle \leq t(\lambda_1^2\lambda_3T^2 + 3\lambda_1^2\lambda_dT + 3\lambda_1\lambda_d\lambda_3T + 6\lambda_1\lambda_d^2) \qquad (19)$$

for events with accumulator inleakage and

$$t\langle\lambda_s^T(1,2,3,\bar{A})\rangle = t\langle\lambda_s^T(1,2,3)\rangle(1-C) \qquad (19a)$$

for events without accumulator inleakage.

The meaning and numerical values of the variables are given below in the description of quantification.

<u>2nd Time Period</u> (3-6 months), T = 1/4 year;

The same frequency contribution as above plus the correction. The correction is calculated by counting all the possible failure combinations caused by "valve fails to operate on demand" failure mode;

$$\langle\lambda_s^T(1,2,3)\rangle^{corr} = (2\lambda_d\lambda_1\lambda_3T + 4\lambda_d^2\lambda_3 + 2\lambda\lambda_d^2 + 2\lambda_d^3) \qquad (20)$$

for events with accumulator inleakage and

$$\langle\lambda_s^T(1,2,3,\overline{A})^{corr} = \langle\lambda_s^T(1,2,3)\rangle(1-C) \qquad (20a)$$

for events without accumulator inleakage.

3rd Time Period (6-9 months).

The same contribution as in the second time period plus twice this correction term because the frequency of "valve fails to operate on demand" failure mode doubles (accumulates).

4th Time Period (9-12 months).

The contribution from this time period is exactly the same as that of the first one.

Quantification of I_{LPI} (Oconee 3)

In the formulae above

λ_1 is the leakage failure frequency of the check valves.
λ_d is the check valve "fails to operate on demand" failure frequency. The same quantity is used also for "MOV fails to operate on demand" failure mode (see also Section B.2.5).
λ_3 is the sum of the frequencies of MOV failures which lead to inadvertent open state of normally closed MOVs.

1. The formulae were evaluated as a function of the leakage flow rate. The leakage frequencies were taken from the frequency exceedance curve (Figure B.2). The same procedure was used for obtaining mean, etc., failure frequencies as that of applied for the Indian Point 3 calculations.

2. The frequency of "valve fail to operate on demand" is also the same as that was used for the Indian Point 3 calculations (see also Section B.1.2.3);

λ_d^{Mean} = 2.81(-4)/demand. The expectation of its square is:

$$\langle\lambda_d^2\rangle = (\lambda_d^{Mean})^2 + \text{var.} = 2.05\text{x}10^{-7}/\text{demand}^2.$$

The expectation of its third power is obtained by the generic formula valid for lognormal distributions:

$$\langle\lambda_d^3\rangle = \left[\frac{\langle\lambda_d^2\rangle}{\lambda_d^{Mean}}\right]^3 = 3.88\text{x}10^{-10}/\text{demand}^3.$$

3. The sum of the mean frequencies of MOV failures leading to inadvertent open state of normally closed MOV is obtained from the following contributors:

a) MOV disc rupture (B.2.1)	$1.20\text{x}10^{-3}$/year
b) MOV internal leakage (B.2.2)	$4.85\text{x}10^{-3}$/year
c) MOV disc failing open while indicating closed (B.2.3)	$1.07\text{x}10^{-4}$/year
d) MOV transfer open (B.2.4, Seabrook value)	$8.1\text{x}10^{-4}$/year
e) Inadvertent SI signal	$6.4\text{x}10^{-2}$/year*
	$7.10\text{x}10^{-2}$/year

*This value is taken from the Indian Point 3 PRA as a generic value for estimating the frequency of inadvertent SI signal. The Oconee PRA assumes a more moderate value of $1\text{x}10^{-2}$/year.

4. The quantity, 1-C is equal to 0.07.
Since there are two LPI lines and the plant is at power 86% of the time, the initiator frequencies were obtained by the expression:

$$I_{LPI} = .86\text{x}2\text{x}\sum_{i=1}^{4}(\text{quarterly contribution})_i \quad . \qquad (21)$$

The results obtained are shown in Figure 2 as a function of the leak rate for both cases, with and without accumulator inleakage. The coincidence of the Oconee 3 "with accumulator inleakage" curve with Indian Point 3 "without accumulator inleakage curve" is merely accidental.

More precise values are presented in Table 4.4 at relevant leak flow rates. The final initiator frequencies selected as inputs for event trees at appropriate leak flow rates are given also in Table 4.4.

The selection consideration was similar to that described at the Indian Point 3 calculation.

4.3.2.2.3 Calculation of I_{LPI} at Calvert Cliffs 1

At Calvert Cliffs an ISL occurs through the LPI lines if three check valves and a normally closed MOV were in an open failure state. The frequency of the events can be calculated by applying Eq. (15a) to the case. At the application, one has to use the appropriate failure modes of both types of valves, check valves, and MOVs.

The check valve testing policy of Calvert Cliffs 1 is varied; continuous leak/pressure indication of the first check valve and additionally leak test on each inboard check valve at each refueling outages. Leak test is performed quarterly during plant operation and flow test during refueling outages on outboard check valves. The MOVs are stroke tested quarterly and cycled per month.

Since the test interval for the components ranges from zero to 1.5 year in the quantification of Eq. (15a), the basic time period, T, over which the average multiple valve failure frequency is calculated was chosen to be T=1/4 year. The value selected seems to be conservative, considering that the leak/pressure indication and an additional safety valve would detect the failures of the first check valve.

There are four lines and the reactor is at power of 88% of the time, the initiator frequencies were evaluated by using Eq. (15a) as a function of the leak rate:

$$I_{LPI}(1,2,3,4) = .88 \times 4 \times \langle \lambda_s^T(1,2,3,4) \rangle \qquad (21)$$

for events with accumulator inleakage and

$$I_{LPI}(1,2,3,4,\overline{A}) = .88x4x<\lambda_s^T(1,2,3,4)>(1-C) \qquad (21a)$$

for events without accumulator inleakage.

The procedure of the calculation was the same as it was applied in the previous cases.

The sum of the mean frequencies of MOV failures leading to inadvertent open state of normally closed MOV is obtained by using the list given at the quantification of Oconee 3 initiators. The only difference is that the demand rate "at MOV failing open while indicating closed" failure mode is taken to be 12/year, resulting in λ_3 = 7.22(-2)/year.

The results of the calculation are shown on Figure 4.3 as a function of the leak rate. The ISL frequencies seem to be indeed small because of the high check valve redundancy. More accurate initiation frequencies at relevant leak flow rates are given in Table 4.4. Table 4.4 indicates also the selected values for small LOCA and overpressurization initiators. The selection criteria were similar to those applied at Indian Point.

4.3.2.3 ISL Initiator Frequencies for HPI Pathways

The basic valve arrangements of the interfacing HPI lines do not differ from those already described for the LPI. Thus, the calculation of average multiple valve failure frequencies for individual lines essentially repeats the approach applied at the I_{LPI} calculations. Small complication arises only for systems where various valve arrangements occur together as in the HPI system of Indian Point 3.

4.3.2.3.1 Calculation of I_{HPI} at Indian Point 3

The HPI system in this plant has:

A) Four lines whose valve arrangement is of the type: three check valves and an open MOV. These lines have shared inlets with the LPI/Accumulator System to the cold legs of the RCS.

B) Four lines whose valve arrangement is of the type: two check valves and an open MOV. These lines have no shared inlets with the accumulator.

C) Two lines whose valve arrangement is of the type: two check valves and a closed MOV.

There is a relief valve for these lines with a set point of 1500 psia and estimated capacity of 580 gpm. Valve descriptions are given in Table 2.3.3.

1. Calculation of average multiple check valve failure frequencies for group A lines.

The leak and stroke test of the check valves on these lines are different. The first check valve (upstream) stroke and leak tested at each cold shutdown. The other check valves are stroke tested at each cold shutdown, but leak tested at every refueling. The average valve failure frequencies per line were calculated for both of the cases, with and without accumulator inleakage by using the expressions:

$$3[\langle\lambda_s^T(1,2,3)\rangle] \leq 3(\lambda_1^3T^2 + 6\lambda_1^2\lambda_dT + 6\lambda_1^2\lambda_dT + 6\lambda_1\lambda_d^2) \ , \qquad (22)$$

and

$$3[\langle\lambda_s^T(1,2,3,\overline{A})\rangle] \leq [\langle\lambda_s^T(1,2,3,) \rangle (1-C)] \ . \qquad (22a)$$

The time interval selected for the quantification was T=1/3 year, the average cold shutdown period, applicable for the first check valve. However, to make correction for the asymmetric in the leak and stroke test interval (1.5 year) of the other check valves, the average failure frequencies were multiplied by three.

The definition of the quantities appearing in these expressions have been defined earlier. The frequency values were quantified as a function of the leak flow rate through the first check valve.

2. Evaluation of average multiple check valve failure frequencies for group B lines.

The check valves on these lines are stroke and leak tested only a each refueling period. Thus, the average multiple check valve failure frequencies were calculated with a time period of T=1.5 years. The lines do not have shared inlet with the accumulator.

The average failure frequency of two check valves is calculated with the formula by the formerly explained way:

$$\langle\lambda_s^T(1,2)\rangle = (\lambda_1^2 T + 2\lambda_1\lambda_d) \quad .$$

3. Evaluation of average multiple check valve failure frequencies for group C lines.

The check valves on these lines are stroke and leak tested also at each refueling period (T=1.5 years). The MOVs are locked closed during normal operation. Therefore, from the MOV failure modes (see the list at B.2) the "MOV disk rupture," "MOV internal leakage," "MOV left open while indicating closed" failure modes, and "MOV does not operate on demand" failure modes were selected as appropriate ones. The sum of the failure frequencies of the first three failure mode is λ_3 = 6.16(-3)/year.

The average multiple failure frequency was calculated by the expression:

$$\langle\lambda_s^T(1,2,M)\rangle = (\lambda_1^2\lambda_3 T^2 + 3\lambda_1^2\lambda_d T + 3\lambda_1^2\lambda_d + 6\lambda_1\lambda_d) \ , \qquad (23)$$

where all the quantities were defined previously.

Taking into account that the reactor is at power about 72% of the total time, the initiator frequencies were evaluated for each group of lines, A, B, and C separately with the following expressions.

For line group A, in the case when there is accumulator inleakage

$$I^{A}_{HPI} = .72x4x3<\lambda^{T}_{s}(1,2,3)>(1-C) \ , \qquad (24)$$

and in the case when there is no accumulator inleakage

$$I_{HPI} = .72x4x3<\lambda^{T}_{s}(1,2,3)>(1-C) \ . \qquad (24a)$$

For line group B (no inlet shared with the accumulator)

$$I_{HPI} = .72x4x<\lambda^{T}_{s}(1,2)> \ , \qquad (25)$$

and for line group C (no inlet shared with the accumulator

$$I_{HPI} = .72x2x<\lambda^{T}_{s}(1,2,M)> \ . \qquad (26)$$

The results were plotted as a function of the leak flow rate at the line inlets in Figure 4.3. The figure shows the dominant contributors are the flow paths having no common inlets with the accumulator.

Numerical value of the "line group frequencies" at several important leak flow rates are presented in Table 4.5. The table shows, each line group contribute to both, the overpressurization and for small LOCAs. The selection of values is based on the same leak rate considerations which were explained at the description of LPI initiators. The data in the last column of Table 4.5 indicate the final values selected for further analysis.

4.3.2.3.2 Calculation of I_{HPI} at Calvert Cliffs 1

The valve arrangement of the HPI lines at Calvert Cliffs 1 is similar to that of the LPI lines: three check valves and a closed MOV. (The valve descriptions are given in Table 2.5.3.) The number of lines is 4.

The testing policy of the isolation check valves is also similar continuous leak pressure indication of the first check valve (common with the accumulator and LPI lines), leak test quarterly during plant operation of a

outboard check valve, flow test during refueling outages. Additionally, leak test on each inboard check valves at each refueling.

The position of the MOVs is under continuous surveillance. They are stroke tested quarterly and after cycling upon SI signal their closed position is monthly verified. There is also a relief valve at header of the branch lines with a setpoint of 1485 psia and an estimated capacity of about 580 gpm.

There was no reason to use other parameters to calculate the multiple valve failure frequencies than it was used in the case of the LPI. Thus, the Calvert Cliffs frequency vs. leak flow rate curves in Figure 4.3 relate not only to the LPI but also to the HPI system.

Since the relief valve setpoint and capacities are different, the leak flow requirements will be also different for the two systems. Correspondingly, the selected values for small LOCA and overpressurization initiators will be different. These values are presented in Table 4.5 where also the data on Indian Point 3 are also shown.

4.3.3 ISL Initiator Frequencies For RHR Suction Paths

For all three plants the three single RHR suction lines (Tables 2.3.3, 2.4.2, 2.5.2) is separated by two specially built MOVs in series. The basic model of two valves in series described in Section 4.3.1 is essentially applicable to calculate the average failure frequency of each of these valve arrangement if the MOV failure modes are appropriately selected. For some of the valve arrangements preclude certain failure modes and test policies and practices are also different at each plant. Therefore the initiator frequencies are calculated on a plant specific basis.

There is a generic problem in the calculation of the initiator frequencies for the RHR suction paths, namely how to take into account in the model the role of the suction side relief valve. The approach applied for the check valves, when the initiation frequencies are evaluated as a function of the leak rate cannot be applied. The reason for this is that leakage failure

frequency data similar to those of the check valves are not available for MOVs. The use of check valve data, as surrogates, can be very misleading.

In order to overcome this problem, the following approach has been adopted in the calculation of initiation frequencies:

Failure combinations involving "MOV internal leakage" failure mode are considered to be representing failure events when the inleakage into the RHR system is below the relief valve capacity. Failure combinations, however, involving "MOV disk rupture" with other MOV failure modes (not MOV internal leakage) are considered to contribute to the overpressurization frequency of the RHR suction line (i.e., inleakage into the suction line is assumed to be higher than the relief valve capacity).

4.3.3.1 Calculation of I_s at Indian Point 3

In Appendix B.2 six different failure modes are listed for a typical MOV. From these three failure modes (1) MOV failing open while indicating closed, (2) MOV transfer open, and (3) MOV gross external leakage are not considered.

At Indian Point 3 the MOVs are stroke and leak (disk integrity) tested at each cold shutdown. The leak test rules out the possibility of leaving the valve open, while the control room has a signal indicating a closed position. (If both valves had failed open valve disks, this condition would be detected during plant startup.) "MOV transfer open" failure mode cannot happen either, because at this plant not only the power breakers are locked in the off position but even the fuse disconnect is normally kept open during normal plant operation. Gross external leakage would result in a LOCA inside the containment with the HP and LP recirculation paths remaining open. It would cause no overpressurization. The frequency of this failure mode (B.2.6) is very small, so its failure combinations are assumed to be negligible.

Since Indian Point 3 is at power about 72% of the time the overpressurization frequency of the suction line is calculated by the expression (see also Eq. (7)):

$$T_s(\text{Rupture}) = .72x(\lambda_R^2 T + 2\lambda_R \lambda_d) \ , \qquad (27)$$

where λ_R denotes the mean frequency of the "MOV disk rupture" failure mode (B.2.1) and

λ_d denotes "MOV fails to operate on demand" failure mode (B.2.5).

The time parameter, T = (1/3)year, is the average time period between cold shutdowns.

The result of the quantification is:

$$I_s(\text{Rupture} = 9.80(-7)/\text{year} \ .$$

Similarly, the frequency of "leakage" events is calculated by the expression:

$$I_s(\text{Leakage}) = .72x(\lambda_L^2 T + \lambda_R \lambda_L T + 2\lambda_L \lambda_d) \ , \qquad (28)$$

where λ_L denotes the "MOV internal leakage" failure mode (B.2.2).

λ_L and λ_d denote the same failure modes as were defined above.

The frequencies of various failure modes used in the quantification are given in Appendix B.

The quantification yields:

$$I_s(\text{Leakage}) = 1.80(-5)/\text{year} \ .$$

The values, I_v(Rupture and I_v(Leakage) are presented also in Table 4.6 for comparison with other initiation frequencies obtained for other plants.

4.3.3.2 Calculation of I_s at Oconee 3

The MOVs of the RHR suction line at Oconee 3 are located inside the containment. Thus, the "MOV external leakage" failure mode is not considered in the analysis. As it was mentioned in the previous section, this failure mode would result only in an inside LOCA of low occurrence frequency. The

simultaneous occurrence of "MOV fail open, while indicating closed" failure event is expected to be recognized during plant heatup and is not further considered. At Oconee 3 the two MOVs are:

- stroke tested at each cold shutdown and
- leak (disk integrity) tested at every nine months.

Since the leak tests are carried out less frequency than the stroke tests, the "MOV fails open, while indicating closed" (demand type) failure mode would increase after each cold shutdown during the nine month period between two leak tests.

The initiator frequencies are evaluated for four time periods of three months long and the results will be summed to obtain the yearly ISL frequencies. The terms to be quantified are:

<u>1st Time Period</u> (0-3 months) t = 1/4 year.

Terms of rupture type (since valve ruptures are detected by the stroke test: T = 1/4 year).

$$F_R^1 = t(\lambda_R^2 T + 2\lambda_R \lambda_d) \qquad (29)$$

Terms of leakage type (since disk integrity is tested only in each nine month period: T = 3/4 year).

$$F_L^1 = t(\lambda_L^2 T + \lambda_L \lambda_R T + 2\lambda\lambda_d) \qquad (30)$$

In these expressions λ_R, λ_L, and λ_d denote "MOV rupture," "MOV leakage," "MOV fails to operate on demand" failure frequencies, respectively.

<u>2nd Time Period</u> (3-6 months) t = 1/4 year.

The same frequency contributions, F_R^1, F_s plus the corresponding corrections:

$$F_R^2 = F_R^1 + \text{Corr.}_R^1 \quad \text{and} \quad F_L^2 = F_L^1 + \text{Corr.}_L^1 \ .$$

In the first expressions, the correction terms of rupture type (T = 1/4 year) are:

$$Corr._R^1 = t(2\lambda_R\lambda_g + \lambda_R\lambda_{T2}^{T}) \quad . \tag{31}$$

In the second expression, the correction terms of leakage type (T = 1/4 year) are:

$$Corr._L^1 = t(2\lambda_L\lambda_g + \lambda_g\lambda_T + \lambda_L\lambda_{T2}^{T}) \quad . \tag{32}$$

In the correction terms λ_g and λ_T denote the frequencies of "MOV fails open, but indicating closed," and "MOV transfer open" failure modes, respectively. "MOV transfer open" failure mode is considered only for the second (downstream) MOV, since the upstream valve is always subjected to the full RCS pressure. "MOV transfer open" failure events may arise at Oconee 3, because according to our knowledge, the fuse disconnect is not kept open normally.

<u>3rd Time Period</u> (6-9 months) t = 1/4.

The same frequency contributions as in the previous period and additional increase of demand type failure terms:

$$F_R^3 = F_R^2 + Corr._R^2 \quad \text{and} \quad F_L^3 = F_L^2 + Corr._L^2 \quad .$$

In the first expression the additional correction term of rupture type (T = 1/4 year) is:

$$Corr._R^2 = 4(2\lambda_R\lambda_g) \tag{33}$$

In the second expression the additional correction term of leakage type (T = 1/4 year) is:

$$Corr._L^2 = t(2\lambda_R\lambda_g) \tag{34}$$

4th Time Period (9-12 months).

The same terms as in the first time period. The frequencies of various failure modes used in the quantification are given in Appendix B.

The quantification provides the following frequency contributions:

	Rupture	Leakage
1st time period:	$F_R^1 = 1.29(-7)$/qu.yr.,	$F_L^1 = 1.38(-5)$/qu.yr.
2nd time period:	$F_R^2 = 6.79(-7)$/qu.yr.,	$F_L^2 = 1.61(-5)$/qu.yr.
3rd time period:	$F_R^3 = 7.43(-7)$/qu.yr.,	$F_L^3 = 1.65(-5)$/qu.yr.
4th time period:	$F_R^4 = F_R^1 = 1.29(-7)$/qu.yr.,	$F_L^4 = F_L^1 = 1.38(-5)$/qu.yr.
Total	$F_R = \sum_{i=1}^{4} F_R^i = 1.68(-6)$/yr.,	$F_L = \sum_{i=1}^{4} F_L^i = 6.02(-5)$/yr.

The initiation frequencies (by using 86% capacity factor for Oconee 3) are:

I_s(Rupture) = $.86 \times F_R$ = 1.44(-6)/year and
I_s(Leakage) = $.86 \times F_L$ = 5.18(-5)/year.

These values are given also in Table 4.6.

4.3.3.3 Calculation of I_s at Calvert Cliffs 1

The isolation valve arrangement on the RHR suction line at Calvert Cliffs 1 (Shutdown Cooling Line) is different from those of the other two plants. One of the isolation MOVs is located outside the containment. This requires to consider the "MOV external leakage" failure mode for that valve for such

failure event would lead an ISL bypassing the containment even though actual overpressurization would not occur.

An interesting feature of the Calvert Cliffs isolation valve system that a relief valve is located between the two MOVs, inside the containment. While it has the potential for continuous leakage monitoring, its set point (~2485 psia) is much higher than the normal operating pressure of the RCS (~2250 psia). Therefore, in the present study no credit is given to this possibility.

The MOVs are stroke and leak tested at every refueling. There are about on the average four cold shutdowns per year. After cold shutdowns, however, in order to avoid "MOV failing open while indicating closed" failure mode manual checks are carried out by using calibrated wrench, to check whether the valves are indeed closed (have the prescribed torque). The maintenance crew (usually consisting of two persons) knows that these valves are "sacred" at the plants and the potential consequence of a failure to close these valves is severe. The mean human error probability that the crew will leave open the valves (or initiate restoring valve position) is estimated to be $2x10^{-3}$/d. Thus, the combination of this human failure with the "MOV failing open but indicated closed" failure (λ_g = 1.04(-4)/year, B.2.3) would be about $2x10^{-7}$/year. Therefore, it is taken to be negligible.

"MOV transfer open" failure mode is considered only for the second (downstream) MOV because this valve is not under high pressure difference and the fuse disconnects of the MOVs at this plant normally not kept open.

Calvert Cliffs 1 is at power about 88% of the time. Thus, the rupture and leakage initiator frequencies are calculated by the following expressions:

$$I_s(\text{Rupture}) = .88x(\lambda_R^2 T + 2\lambda_R\lambda_d + \lambda_R\lambda_{T}\frac{T}{2}) \qquad (35)$$

and

$$I_s(\text{Leakage}) = .88x(\lambda_L^2 T + 2\lambda_L\lambda_d + \lambda_L\lambda_{T}\frac{T}{2} + \lambda_R\lambda_L T) \ . \qquad (36)$$

The time T is taken to be T = 1/4 year because MOV disk ruptures would be detected at cold shutdown. In these expressions λ_R, λ_L, λ_d, and λ_T denote the "MOV rupture," "MOV internal leakage," "MOV fails to operate on demand," and "MOV transfer open" failure frequencies, respectively.

Quantification yields for the initiation frequencies:

I_s(Rupture) = 1.45(-6)/year and
I_s(Leakage) = 1.89(-5)/year.

The frequency of ISLs bypassing the containment by the "MOV external leakage failure mode" is estimated by the expressions:

$$I_{Direct}(\text{Rupture}) = .88x(\lambda_R \lambda_0 T/2)$$

for cases when the first MOV ruptures and the second leaks profusely, and

$$I_{Direct}(\text{Leakage}) = .88x(\lambda_L \lambda_0 t/2)$$

for cases when the first MOV is leaking only. In these expressions λ_0 denotes the frequency of "MOV external leakage" failure mode (see B.2.6). Quantification if performed by assuming that T = 8 hours, a very conservative case that the external leakage of the MOV would not be detected. The values obtained are:

I_{Direct}(Rupture) = 4.22(-10)/year and
I_{Direct}(Leakage) = 1.84(-9)/year.

All of the above data are presented also in Table 4.6 for comparison. The coincidence of the I_s(Rupture) values for Oconee 3 and Calvert Cliffs 1 is completely accidental.

4.3.4 Letdown

The letdown line is used to continuously remove reactor coolant for level control and/or RC chemistry treatment.

4.3.4.1 Indian Point Unit 3

Reactor coolant is withdrawn from the intermediate leg of the RC piping through a manual and two air-operated fail closed stop valves, LCV-459 and LCV-460. Three letdown orifices are provided the reduce the letdown flow pressure from RCS operating (2235 psig) to the CVCS operating pressure (225-275 psig). Normally one orifice is in operation allowing normal letdown flow at optimum level. One of the other two orifices is for backup and the other is to increase letdown flow when required to the maximum capacity of the CVCS. A relief valve is provided on the inside containment section of the low pressure piping to protect it in the event that either the letdown control valves fail open, the flow orifice may rupture or any of the low pressure block valves (201, 202) may fail in the closed position. These failure modes combined with the failure of the relief valve may result in a pipe rupture. In case the relief valve opens the result is a small LOCA inside the containment. Failure rates for air-operated valves fail to remain open or fail in the open position has been obtained from the data base included in the Oconee PRA and has the value of λ_{Valve} = 2.01-03/year. The orifice rupture rate has been obtained from the data base provided in the Calvert Cliffs PRA, $\lambda_{Orifice}$ = 2.63-04/year. Similarly, the failure rate for a relief valve to open on demand is λ_{RV} = 3.0-04/d. The total average failure rate at Indian Point resulting in a pipe rupture is

$$\langle\bar{\lambda}_{Letdown}\rangle = (\lambda_{Valve} + \lambda_{Orifice}) * \lambda_{RV} = 6.82\text{-}07/\text{year} .$$

The opening of the relief valve results in a small LOCA inside the containment and its average failure rate is

$$\langle\bar{\lambda}_{Letdown}\rangle = \lambda_{Valve} + \lambda_{Orifice} = 2.28\text{-}03/\text{year} .$$

4.3.4.2 Oconee Unit 3

The letdown flow from the RCS is routed through the normally used 3A LD cooler. Two MO block valves are provided on this line, HP-1 and HP-3, inside the containment. There is a redundant cooler and associated block valves (3B,

HP-2 and HP-4). Outside the containment there are two air-operated HP stop valves (HP-5, HP-6) upstream of the pressure reducing orifice and the letdown flow control valve (HP-7) parallel with the orifice. The HP/LP boundary is located outside the containment including the relief valve on the LP piping. Failures, such as orifice rupture, demineralized inlet valves fail closed or letdown flow control valve fail open leading to overpressurization of the LP piping results in a small LOCA outside the containment, even if the relief valves open. The failure modes to be considered are the same as previously discussed in Section 4.3.2.4.1.

λ_{Valve} = 2.01-03/year
$\lambda_{Orifice}$ = 2.63-04/year .

The average failure rate for the letdown system including small LOCA events due to overpressurization and consequent opening of the relief valve is

$$\langle\bar{\lambda}_{Letdown}\rangle = \lambda_{Valve} + \lambda_{Orifice} = 2.28\text{-}03/\text{year} .$$

4.3.4.3 Calvert Cliffs Unit 2

Coolant letdown from the cold leg first passes through the regenerative heat exchanger and then through the letdown control valves. The valves, controlled by the pressurizer level control system, control the letdown flow to maintain proper pressurizer level. An excess flow check valve is installed before the control valves to limit the letdown flow in abnormal circumstances. RC pressure is reduced to CVCS operating pressure in one of the air-operated letdown control valve. A relief valve on the low pressure side prevents the overpressurization of the LP piping.

The average failure rate of the letdown system can be obtained using general valve and orifice failure data as in the previous section and estimated as:

$$\langle\bar{\lambda}_{Letdown}\rangle = 2.28\text{-}03/\text{year} .$$

4.3.5 References

1. "Indian Point Probabilistic Safety Study," Power Authority of the State of New York and Consolidated Edison Company of New York, 1982.

2. "Oconee PRA, A Probabilistic Risk Assessment of Oconee Unit 3," NSAC-60, June 1984.

3. "Interim Reliability Evaluation Program: Analysis of the Calvert Cliffs Unit 1 Nuclear Power Plant," NUREG/CR-3511, March 1984.

DRAFT

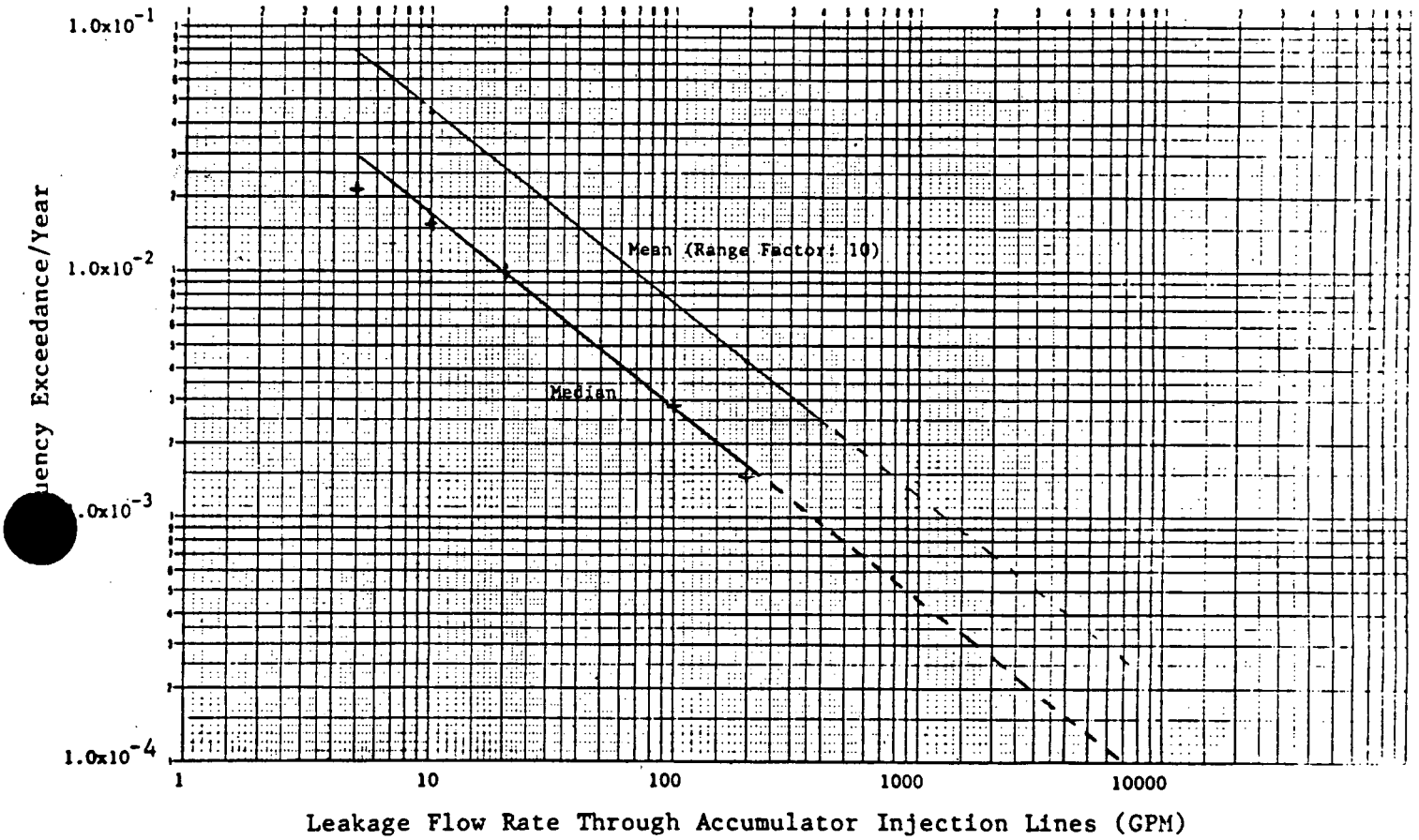

Figure 4.1 Frequency of accumulator inleakage events.

DRAFT

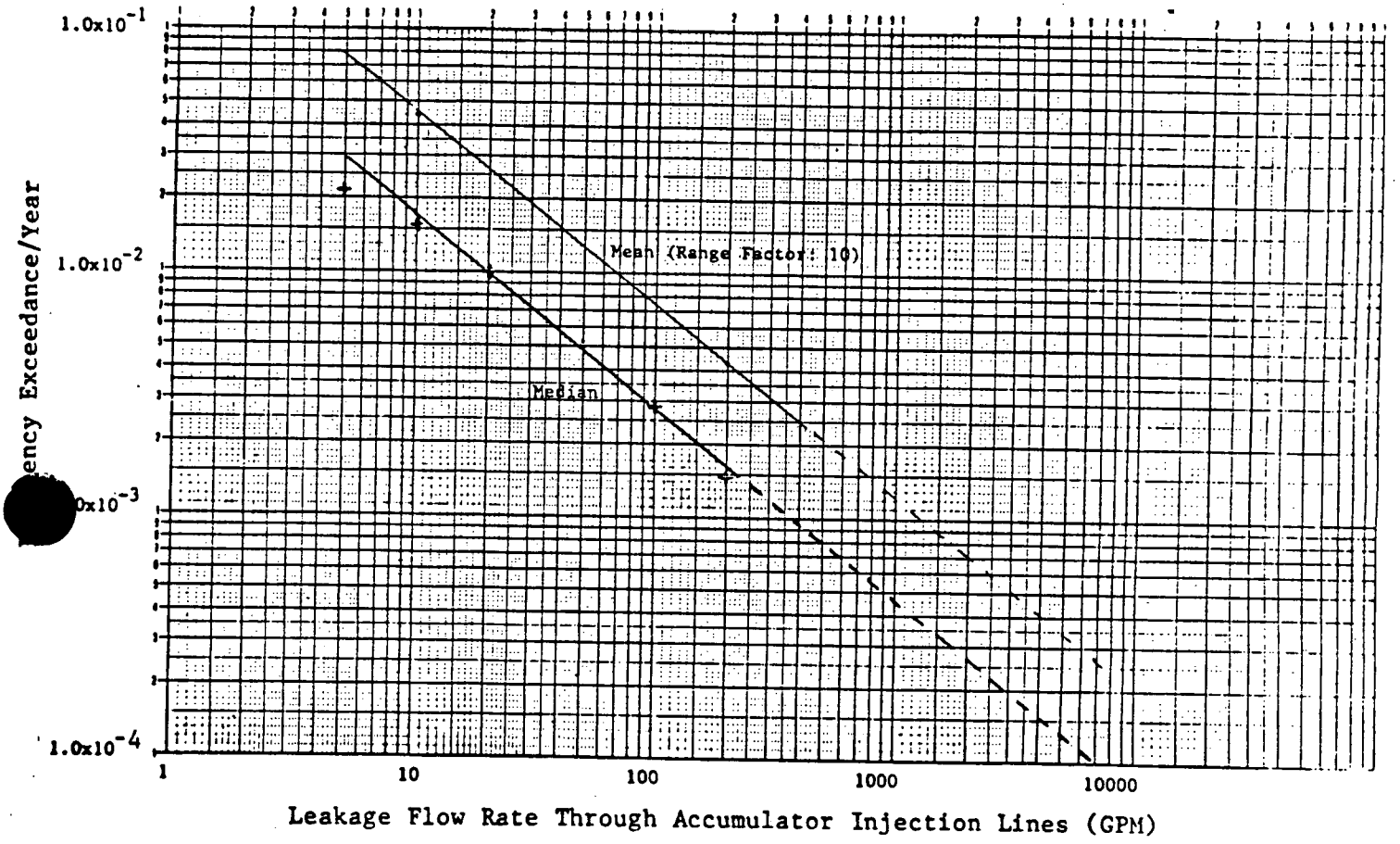

Figure 4.1 Frequency of accumulator inleakage events.

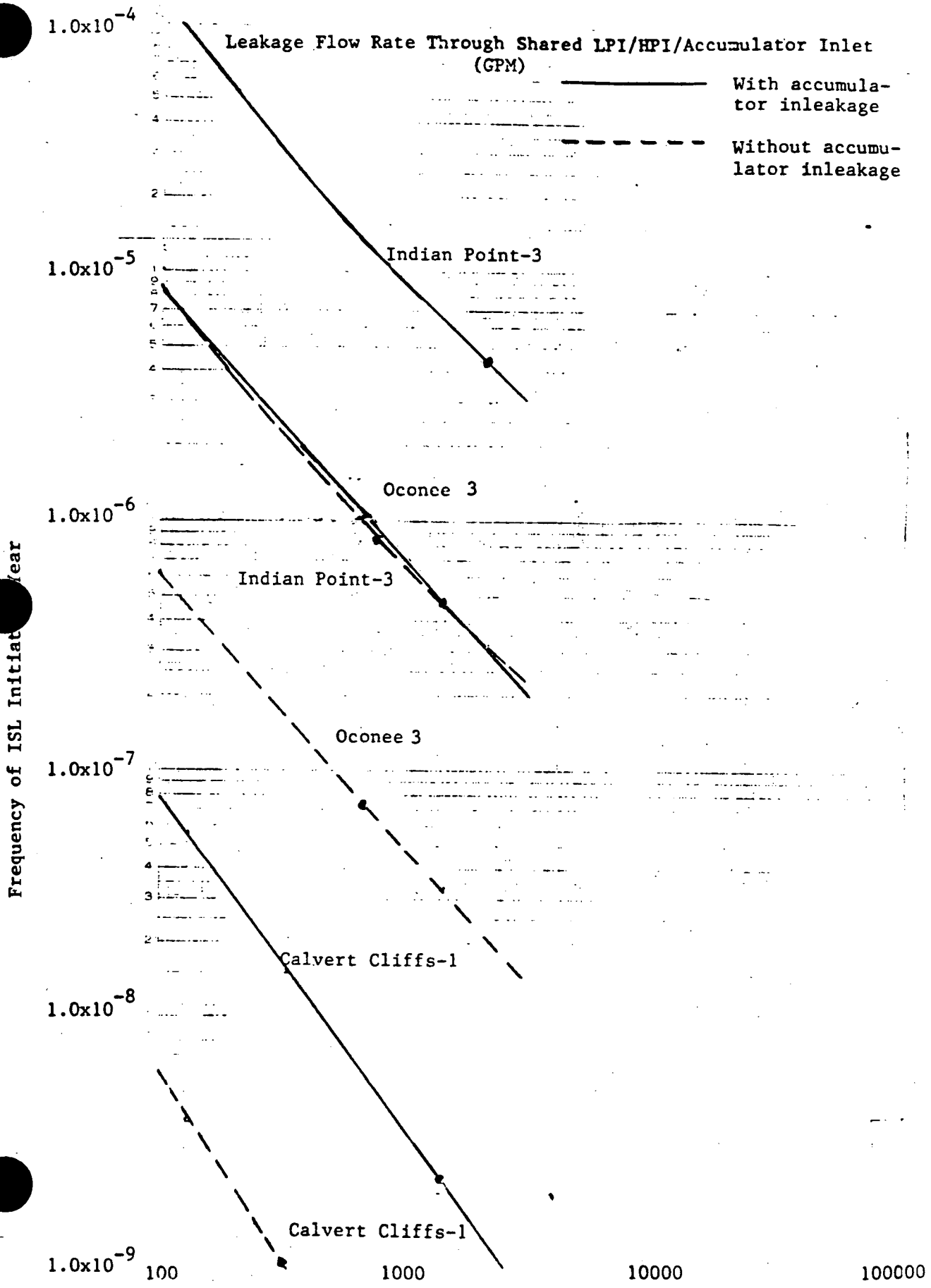

Figure 4.2 Frequency of ISL initiators through LPI lines vs. leak rate.

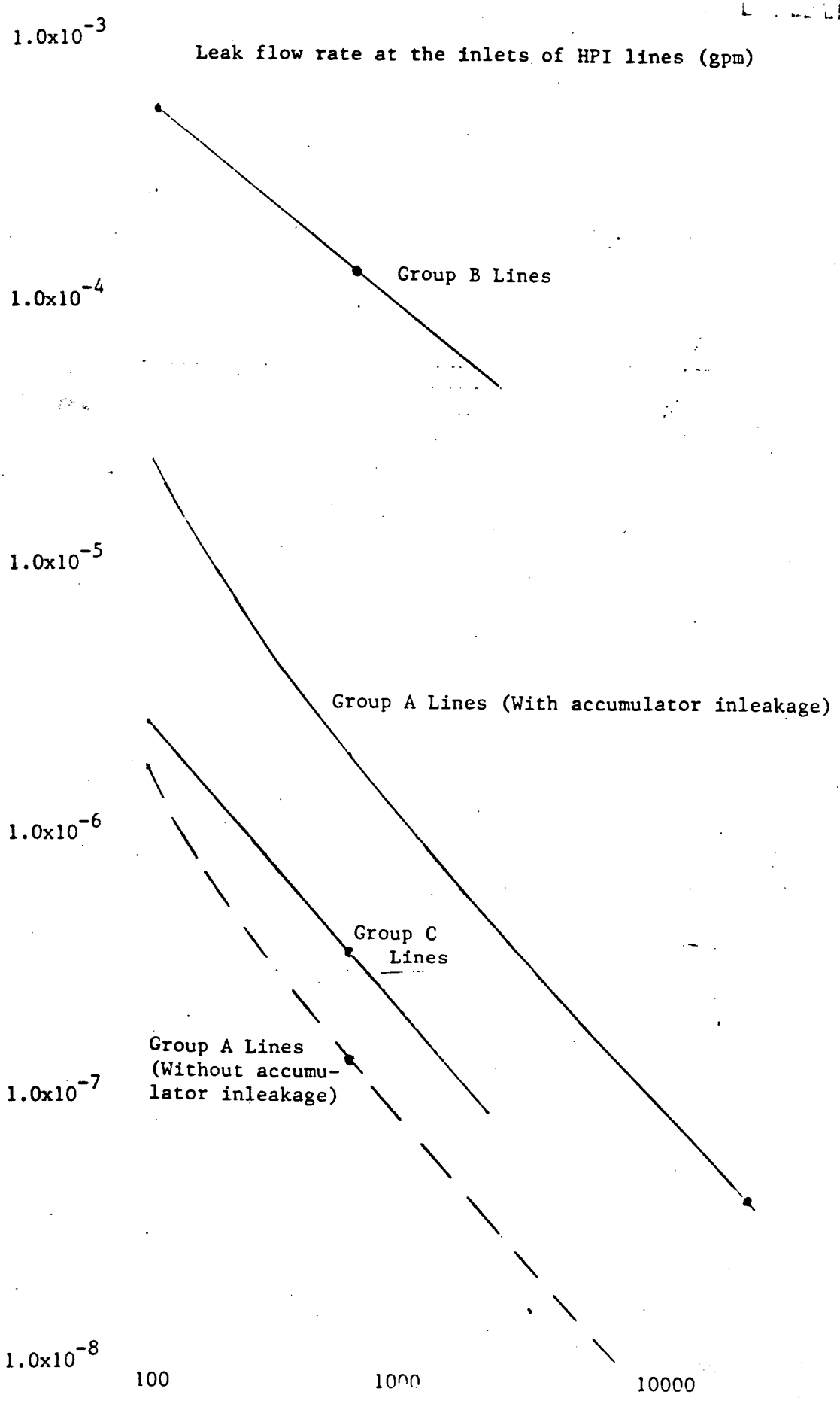

Figure 4.3 Frequency of ISL initiators through HPI lines vs. leak rate - Indian Point 3.

DRAFT

Table 4.1
Some Design Characteristics of The Accumulators
(Core Flooding Tanks) at The Selected PWRs

Design Characteristics	Indian Point-3	Oconee-3	Calvert Cliffs-1
Number of accumulators	4	2	4
Design pressure (psig)	700	700	250
Operating pressure (psig)	650	600	200
Tank total volume (gallon)	8230	10547	14960
Water volume (gallon)	5240	7780	8325
"Free" volume (gallon)	~3000	~2800	~6650
Number of relief valves	1	1	1
Relief valve size	1"	1"	1"
Relief valve setpoint	700	~700	250
Relief valve capacity (est.) (gpm)	710	710	425
Drain line (accessible) and size (inch)	1 (1")	1 (1")	1" (1")
Drainage capacity (gpm)	~1250	~1250	~1250

DRAFT

Table 4.2
Filling Time of Accumulator's "Free" Volumes
For Various Leak Rates*

Indian Point-3		Oconee-3		Calvert Cliffs-1	
Leak Rate (gpm)	Time (min)	Leak Rate (gpm)	Time (min)	Leak Rate (gpm)	Time (min)
100	30	100	28	100	66
200	15	200	14	200	33
300	10	280	10	300	22
500	6	467	6	500	13
740	4	700	4	665	10
1000	3	1000	~3	1000	~7

*Leak rates underlined correspond to the "critical time" necessary to the operator to take successful corrective actions.

Table 4.3
ISL Initiation Frequencies For Accumulator Pathways
With Some Relevant Parameters Used in The Calculation

	Indian Point-3	Oconee-3	Calvert Cliffs-1
Reactor at power	.72	.86	.88
Number of lines, Size (inch)	4 10	2 14	4 12
Leak rate (gpm) at the "critical time, 10 min.,"	300	280	665
Leakage exceedance frequency at above leak rate (per line-year)	3.1(-3)	3.3(-3) *	1.7(-3)
ISL initiation frequency at above leak rate I_A (per year)	8.93(-3)	7.02(-3)	5.98(-3)
ISL frequency at accumulator relief valve capacity	4.64(-3) (710 gpm)	4.10(-3) (710 gpm)	**

*Correction: $E_A^T = 7.84(-4)$.

**Not calculated (relief valve capacity is smaller than 665 gpm).

Table 4.4
ISL Initiation Frequencies for LPI Pathways

Plant	Number of Lines	Leak Rate @ The Shared LPI/HPI/Accum. Inlet (gpm)	LPI Inleakage Frequencies: With Accumulator Inleakage (Per Year)	LPI Inleakage Frequencies: W/O Accumulator Inleakage (Per Year)	I_{LPI} Initiator Frequencies Selected For Further Analysis (Per Year)
Indian Point 3	4	98+	1.27(-4)	8.86(-6)	8.86(-6)
		740++	1.19(-5)	8.33(-7)	
		~2100+++	4.50(-6)	3.20(-7)	5.33(-6)
Oconee 1	2	100+	8.84(-6)	6.19(-7)	6.19(-7)
		660++	1.03(-6)	7.23(-8)	
		1370+++	4.86(-7)	3.40(-8)	5.58(-7)
Calvert Cliffs 1	4	130+	5.60(-8)	3.92(-9)	3.92(-9)
		330++	1.50(-8)	1.05(-9)	
		~1400+++	2.35(-9)	1.65(-10)	3.40(-9)

+Leak rate equal to the maximum charging flow rate.
++Capacity of relief valves at injection side.
+++Leakage required to exceed the capacity of relief valves given accumulator inleakage.

DRAFT

Table 4.5
ISL Initiation Frequencies for HPI Pathways

Plant	Number of Lines	Leak Rate @ The Inlets of HPI Lines (gpm)	HPI Inleakage Frequencies: With Accumulator Inleakage (Per Year)	HPI Inleakage Frequencies: W/O Accumulator Inleakage (Per Year)	I_{HPI} Initiator Frequencies Selected For Further Analysis (Per Year)
Indian Point 3	4 Group A	98+	2.60(-5)	1.81(-6)∇	
		580++	2.05(-6)	1.44(-7)*	Small LOCA
		14600++	4.30(-8)*	3.00(-9)	Sum of ∇ 5.52(-4)
	4 Group B	98+	No shared inlet	5.47(-4)∇	Overpressurization
		580++		1.38(-4)*	Sum of * = 1.39(-4)
	2 Group C	98+	No shared inlet	2.76(-6)∇	
		580++		3.51(-7)*	
Calvert Cliffs 1	4	130+	5.60(-8)	3.92(-9)	3.92(-9)
		580++	8.84(-9)	6.18(-10)	
		28420+++	<1.0(-10)*	<<1.0(-10)	7.18(-10)

+Leak rate equal to the maximum charging flow rate.
++Capacity of relief valves at injection side.
+++Leak rate required to exceed the capacity of relief valves given accumulator inleakage.
Calculated as: Leak rate at relief valve capacity/flow diversion ratio at the shared inlet.
Flow diversion ratio: $\frac{\text{Cross section of LPI line}}{\text{Cross section of acc. line}}$
Indian Point 3: Flow diversion ratio: .04
Calvert Cliffs 1: Flow diversion ratio: .02

Table 4.6
ISL Initiation Frequencies For RHR Suction Pathways

Plant	I_S (Per Year) Leakage+	Rupture++
Indian Point-3	1.80(-5)	9.80(-7)*
Oconee-3	5.18(-5)	1.44(-6)*
Calvert Cliffs-1	1.89(-5)	1.45(-6)*
Direct leakage from external MOV	1.84(-9)	4.22(-10)*

*Selected for further analysis.
+Leakage defines leak rates smaller than the capacity of suction side relief valve.
++Rupture defines leak rates higher than the relief valve capacity.

5. CORE DAMAGE FREQUENCIES AND EVENT TREES

The event trees have been constructed in such a way that for any given initiator the end states correspond to an initiating event of the respective PRA studies of the particular plant.[1-2-3] In this manner all events are classed as small or large LOCAs, inside or outside the containment building with a respective conditional core damage frequency derived from the plant PRAs. The effect of ISL on Safety systems required to mitigate a LOCA has also been considered in determining the conditional core damage frequency. Table 5.1 lists all conditional core damage frequencies as derived from the plant specific PRA studies. The main results of this study, the core damage frequencies due to ISLs are listed in a summary format in Tables 5.2 through 5.6 for the three plants.

One of the major assumptions in this study is that small LOCAs bypassing the containment would eventually lead to core damage. In order to mitigate LOCAs bypassing the containment the operator has to rely on the water supply available in the RWST. Once the RWST is depleted additional source of water must be found.

The time available to establish makeup to the RWST varies depending on the size of the break and the available equipment and could range from 3-4 minutes (~6" break no LP, no HP systems), to a few (~12) hours (~1" break HP available).[4] The makeup to the RWST would be based on an "ad hoc" arrangement, and consequently was not modelled. Core damage was assumed to occur when the RWST has been depleted. In Sections 5.1 through 5.5 the event trees for all interfacing systems are discussed along with the additional assumptions used to establish the core damage frequencies. Section 5.6 briefly describes the method used to derive the conditional core damage frequencies from the plant specific PRAs. The core damage frequencies are presented in Section 5.7. In Appendix C assumptions used to quantify operator performances are discussed and Appendix D presents a brief summary of the thermal-hydraulic aspect of ISL events.

5.1 LP Injection

The event trees for the three plants are shown on Figures 5.1 and 5.2.

An overpressurization event of the LP injection lines at Calvert Cliffs & Oconee cannot be isolated causing a LOCA bypassing the containment. Even though at Oconee one LP injection train might be unaffected, the loss of recirculation capability leads to core damage once the RWST water supply runs out. The Indian Point arrangement is different from the other plants, because a large portion of the system is routed inside the containment and in addition there is isolation capability on each injection line. It is very likely that an overpressurization event of the LP injection line at Indian Point will result in a LOCA inside the containment. The injection line is designed such, that the operator has the capability to terminate the blowdown of the primary coolant by closing at least one of the two high pressure rated MOVs. In addition to the major pipe break event, the top events are (a) pipe break location, inside/outside containment building, and (b) operator diagnoses the event and attempts to terminate it. In case of a small break the probability of a pipe break inside the containment was estimated at .9. This probability was based on engineering judgment after reviewing the piping design and actual layout of the LP injection piping. In case of a small break inside the containment, the primary concern is that depending on the actual break location the HP recirculation capability might be disrupted increasing the core damage frequency due to an unisolated small LOCA without recirculation.

Thermal-hydraulic calculations[4] have indicated (see Appendix D for a brief summary) that there is ample time available (2-3 hours) to the operator to diagnose a small LOCA event. It is assumed that at least one of the two isolation MOVs would operate and would terminate the blowdown of the primary coolant.

The NREP cognitive error function (see Appendix C) has been used to determine the probability of an operator error, 9×10^{-4}, having ~2 hours available to recognize and isolate a small LOCA through the LP injection lines.

The core damage frequency for terminated small LOCAs has been determined using the unavailability of the HP injection system.

A small break outside the containment on the recirculation line connecting the LP outlet to the suction side of the HP pumps would disable the normally closed isolation valves. The RWST would drain through the pipe break and the HP pumps would be unavailable leading to core damage regardless of the isolation capability.

A large LOCA inside the containment would disable one LP injection line making the LP pumps unavailable, leading to core damage. It is assumed that the isolation capability would be lost during a large LOCA, because the isolation MOVs are not designed for high flow and high temperature conditions.

5.2 SI Discharge

The event tree (Figure 5.3), for the SI line overpressurization event is relatively simple at Calvert Cliffs. There is no isolation capability, therefore, a pipe break (small LOCA) would eventually lead to core damage, when the RWST water supply is depleted.

At Indian Point some low pressure portion of the SI piping is inside the containment making the event tree somewhat more complicated (Figure 5.4). In addition, an open MOV on each injection line can isolate a LOCA event. Given an overpressurization accident the relief valve common to both train will open leading to a small LOCA inside the containment. If the leak does not exceed the relief valve capacity, than the core damage frequency is what associated with small LOCA. The integrity of both injection train is intact and can be used to mitigate the accident. If the leak is larger than the relief valve capacity the integrity of the piping boundary may be lost. If the pressure boundary is damaged at the train isolating check valves (858A or B), then the other train may loose enough flow through the break making the HP system unavailable. This leads to CD even if the blowdown is terminated by the operator (no makeup capability).

If the pipe break is located outside (with a probability of .1) and is not terminated, CD will result, because of the lost recirculation capability. In addition, the RWST could most likely be drained through the damaged train making the progress of this accident much faster (reduced RWST inventory). In order to terminate the accident outside the containment on the HP pump discharge line, the operator has to (a) be able to diagnose the problem, (b) terminate the RC blowdown with the SI high pressure isolation MOV, and (c) be able to isolate the damaged HP train and stop the RWST drain. The available time is judged to be 30-60 minutes. Considering the complexity of the accident and the short available time the probability of an error in the operator's action is taken as .1 (the HEP for post-diagnosis activities are taken as 1.0; see Appendix C).

The CD frequency associated with the small outside LOCA, terminated by the operator has been calculated using HP system unavailability with one train in a definite failed mode.

5.3 RHR Suction

The event trees for all three plants are very similar and are shown in Figures 5.5 and 5.6. The main difference at Calvert Cliffs is that the pressure isolation boundary is located outside the containment leading to LOCAs always bypassing the containment. At Indian Point and Oconee the initiator or overpressurization event may cause a pipe break either inside or outside the containment. The first top event is to decide if the event is a small (<6") or large break. The location of the pipe break is of utmost importance and the second top event determines if this is a break inside the containment or bypassing it. The probability of a pipe break outside the containment at Indian Point has been based on field observations and was estimated at .5. The length of the LP piping are approximately equal on both sides of the containment wall, there are few pipe turns and bends and relatively few weld locations. These observations support an equal conditional pipe break probability for the inside and outside LP pipe segments. At Oconee the line just beyond LP-2 is designed for 200 psi. It connects inside the containment to a low pressure pipe designed for 388 psi. There is also a relief valve (388 psi setpoint), which could not relieve the

full pressure. The relief valve and the 200 psi line are the most likely failure points. The probability that pipe break occurs inside the containment was estimated, based on these considerations at .9. If the overpressurization is such that the relief valve is lifted and the leak does not exceed the relief valve capacity the end result is a small LOCA inside the containment. Each plant has an additional low pressure rated, normally closed valve on the suction line after the two closed MOV. The assumption has been made that a major pipe break outside the containment would disable this valve. However, for small breaks, this third isolation valve would maintain the pressure boundary. In either case small or large LOCAs outside the containment eventually lead to core damage, because recirculation is unavailable and the RWST water supply is limited. Naturally the time available to find additional water supply would mainly depend on the size of the break. This ranges, depending on on the available equipment, from a few minutes (large LOCA, no makeup capability) to a few hours (small LOCA, HP available).

5.4 Letdown Lines

Figures 5.7 and 5.8 shows the event trees for the letdown lines. The primary top event asks whether the operator can recognize the nature of the accident and what action might be taken. The time available, even when the HP system is unavailable, is about 1-2 hours before core damage starts. The blowdown can be terminated by closing the high pressure rated letdown stop valves. The probability of the operator not able to recognize and terminate the accident, 1.2×10^{-3}, was determined from the NREP cognitive error function (Appendix C). In this accident substantial amount of primary coolant may be lost requiring makeup capability using the HP pumps. The core damage frequency associated with terminated small LOCAs reflects the unavailability of the HP system.

At Indian Point, in addition to operator action, a top event representing inside or outside break location is also included. The probability of a letdown pipe to rupture outside the containment, .5, has been estimated as previously described in 5.3.

5.5 Accumulators

The event tree for the accumulator system is shown on Figure 5.9. The accumulators are well instrumented including high pressure and high-low level alarms. The operator can easily recognize and diagnose a small ISL event with ample time available to terminate it. Therefore, below a critical leak rate (see Section 4.3.2.1) ISL's are essentially non-events. If the leak rates are above the critical level the time available for operator action is in the order of a few minutes. It has been assumed that initially the operator would try to maintain the water level in the accumulator by draining the excess leakage. The operator error associated with the draining action is based on the lower bound HEP values of Figure C.1 (Appendix C). For Oconee no remote draining capability has been identified eliminating the possibility of this action. If the back leakage is in excess of the drain and relief capacity a major pipe rupture may occur. The operator may be able to terminate the ISL event by closing the high pressure rated MOV on the accumulator outlet lines, which is deenergized open in normal operation requiring local action at the valve MCC. The probability of an operator error, including the probability of an MOV failure to close on demand has been estimated at 3.0×10^{-3} using generic MOV data with the error recognition function. In case of a major pipe or tank rupture the event is equivalent to the large LOCA DBA of the FSAR with one accumulator not being available. All the plant specific PRAs discuss and quantify this event.

5.6 Conditional Core Damage Frequencies (CCDF)

The CCDF values have been derived from the plant specific PRAs.[1-3] All ISL events result in a small or large LOCA, inside or outside the containment. In addition, the effect of the initiating event (ISL) on some of the safety systems required to mitigate the accident has to be also considered.

5.6.1 Indian Point (Reference 2)

In the following events the operator is unable to isolate the primary coolant leak and a failure in one of the required safety systems leads to core damage.

1. Large LOCA Inside Containment - 8.4-03.

   This sequence is basically dominated by sequences AEFC and ALFC, which reflects the failure of the LP injection or recirculation functions (Table 1.3.6.1-4 of Reference 1).

2. Small LOCA Inside Containment - 5.7-03.

   The Indian Point PRA has three LOCA classes (large, medium, and small). In this study the medium and small LOCA has been grouped into one (small loca <6"). In this case the dominant sequences are again related to the injection and recirculation functions (see Table 1.3.6.2-4 and 1.3.6.3-4 of Reference 1).

ISL events terminated by the operator result in core damage only if the makeup capability to the RCS is lost.

3. Small LOCA Inside/Outside, Terminated - 1.7-04.

   In this case the operator is able to terminate the loss of the primary coolant, but it is assumed that makeup is still required to prevent core damage using the HP injection system. This value essentially represents the HP system unavailability and corresponds to the SEFC and AEFC sequences in Table 1.3.6.2-4, Seq. 13-HH-1 failure and Table 1.3.6.3-4, Seq. 35-HH-2 failure.

4. Small LOCA Inside/Outside HP Train Affected - 5.74-03.

   The ISL event may affect one HP injection train. The unavailability of the HP system may be recalculated in terms of the unavailabilities

of the dominant contributors with one train in a failed mode. The dominant contributors with the original quantifications are found in pages 1.6-461 through 1.6-467 of Reference 1.

5.6.2 Oconee (Reference 2, Volume 4)

1. Large LOCA Inside Containment - 1.03-02.

Large break LOCA events are contained in Bin V and VI. Bin V sequences include all those initiating events where core melt results due to failure in the injection phase (AU sequence). Bin VI correspond to failures in the recirculation phase (AX sequence). The dominant cutset listing for Bin V and Vi including the initiator value are in Chapter D.2.7 and D.2.8 of Reference 2, Volume 4, Appendix D.

2. Small LOCA Inside Containment - 2.1-03.

The dominant sequences leading to core melt are primarily related to the unsuccessful operation of the HP injection and/or recirculation system. These sequences are contained in Bin I (SU_S and SY_SX_S) and Bin II (SX_S). Again, the dominant cutsets along with the initiator are listed in Chapter D.2.1.1, D.2.1.3 and D.2.3.3 of Volume 4, Appendix D of Reference 2.

3. Terminated Small LOCA Inside/Outside - 1.6-04.

The HP system unavailability has been derived using the SU_S sequence of Bin I.

5.6.3 Calvert Cliffs (Reference 3)

1. Large LOCA Inside - 2.8-02.

The quantification of all large LOCA sequences, indicated on Figure 5.4 of Reference 3, is listed in Appendix C, Table C.9 of the same

reference. The CCDF due to large LOCA has been calculated based on the initiator value listed in Figure 4.1 of Chapter 4.

2. Small LOCA Inside - 1.3-03.

Similarly to the previous case, the quantified sequences, which are listed in Figure 5.6, were renormalized using the initiator value from Figure 4.1. The numerical values of the sequence probabilities are also listed in Appendix C, Table C.9 of Reference 3.

3. Terminated, Small LOCA Inside/Outside - 7.5-05.

The HP system unavailability has been derived using the S_2D'' sequence with the corresponding initiator.

5.7 Core Damage Frequency (CDF)

The plant and system specific CDFs are listed in Tables 5.2a through 5.4b. In Tables 5.2a, 5.3a, and 5.4a only ISL events resulting in overpressurization are shown. If the system is equipped with a relief valve than overpressurization occurs only if the leak is in excess of the capacity of this valve. The opening of the relief valve results in a small LOCA inside the containment and the associated CDF values are listed in Tables 5.2b, 5.3b, and 5.4b.

A summary of the total CDF due to ISL, both inside and outside the containment, is shown in Table 5.5 with the respective CDF values (due to LOCAs) from the plant specific PRAs.

It can easily be seen that the total CDF due to overpressurization is less sensitive to low values of the major pipe rupture probability parameter. This is mainly reflecting the assumption that small LOCAs bypassing the containment would eventually result in core damage. Therefore, small LOCA events will be the dominant contributors to CDF when the major pipe rupture probability is small.

The most important result of this study, CDF due to ISLs bypassing containment are listed in Table 5.6. This again reflects the dominance of small LOCA events at low P(Rupture).

The total contribution of these events to CDF due to LOCAs is rather small (~1%), but naturally they are one of the most significant type of contributors to risk resulting from core damage.

5.8 References

1. "Indian Point Probabilistic Safety Study," Power Authority of the State of New York and Consolidated Edison Company of New York, 1982.

2. "Oconee PRA, A Probabilistic Risk Assessment of Oconee Unit 3," NSAC-60, June 1984.

3. "Interim Reliability Evaluation Program: Analysis of the Calvert Cliffs Unit 1 Nuclear Power Plant," NUREG/CR-3511, March 1984.

4. "Dominant Accident Sequences in Oconee-1 Pressurized Water Reactor," NUREG/CR-4140, April 1985.

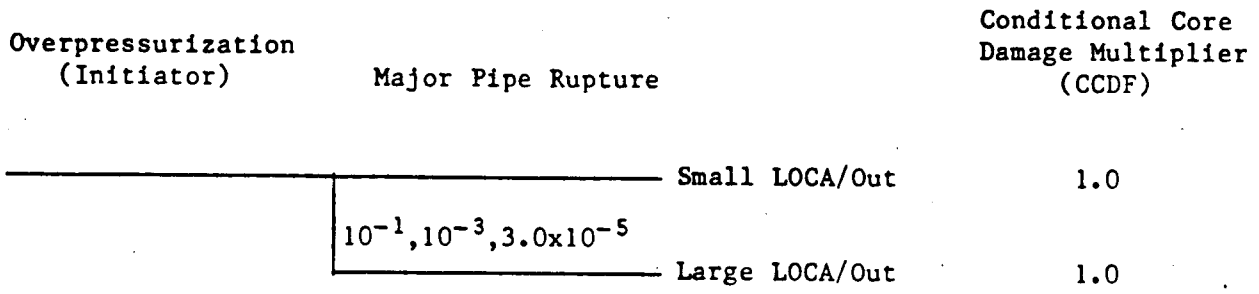

Figure 5.1 ISL Event Trees - LP injection, Oconee and Calvert Cliffs stations.

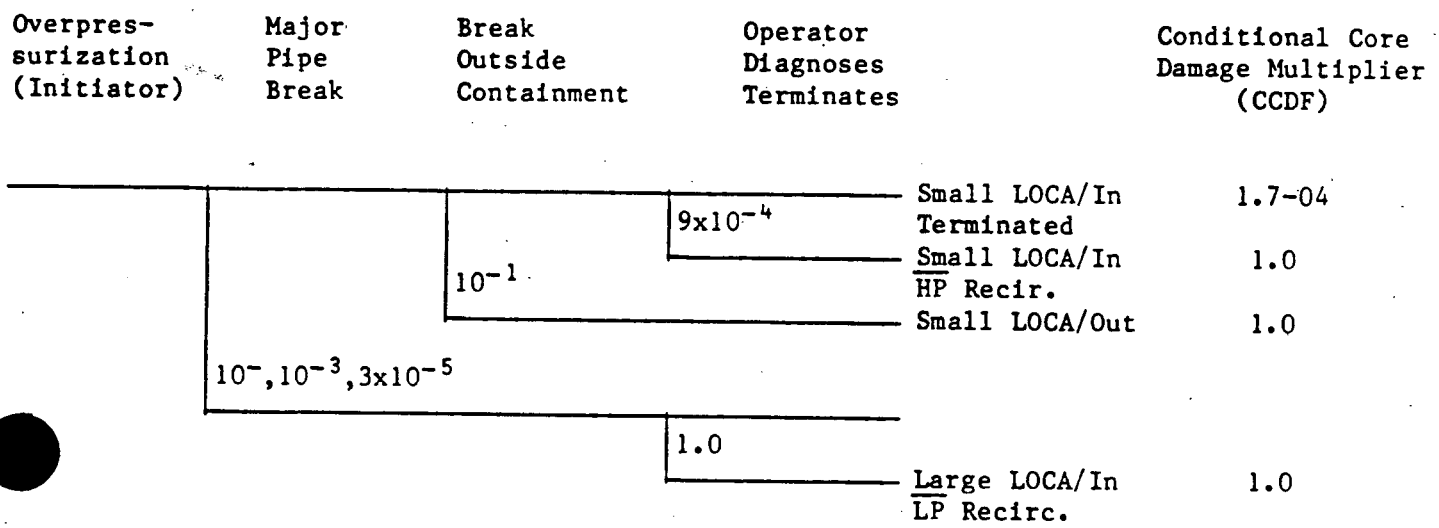

Figure 5.2 ISL Event Trees - LP injection, Indian Point Station.

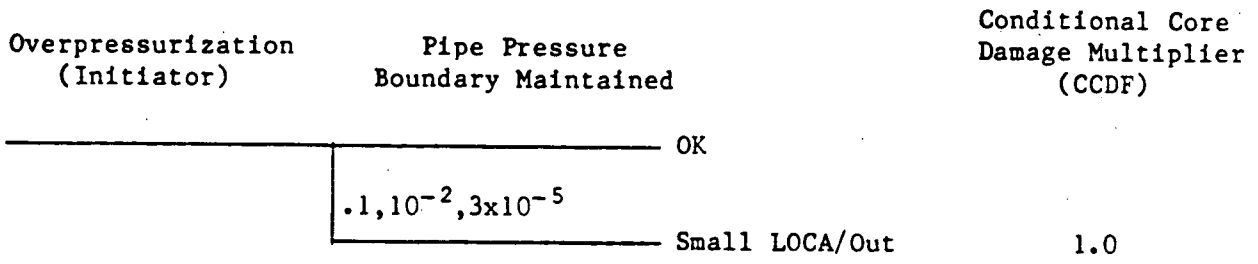

Figure 5.3 ISL event tree - SI discharge, Calvert Cliffs station.

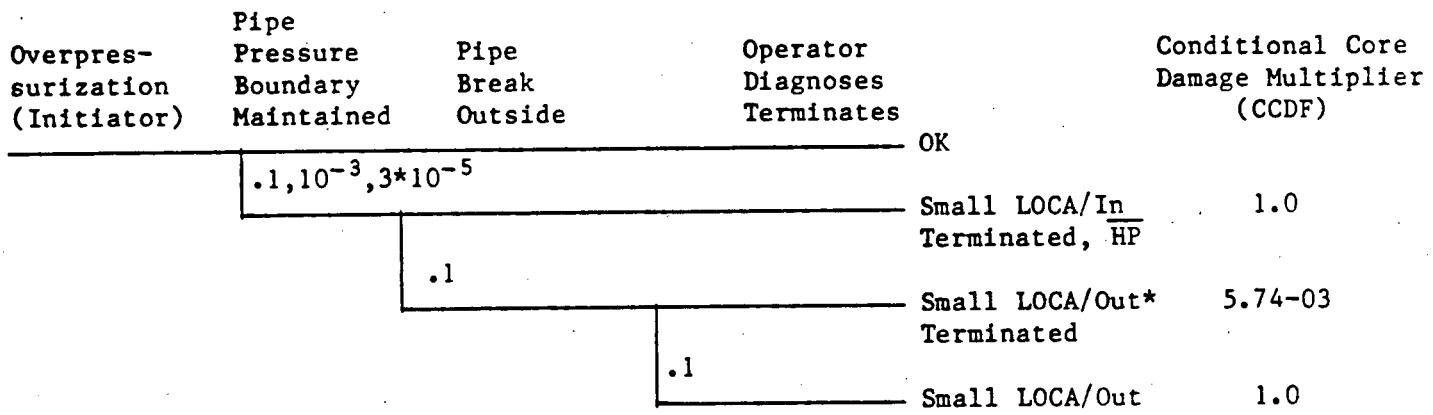

*CDF calculated with one side in failed mode.

Figure 5.4 ISL event tree - SI discharge, Indian Point Station.

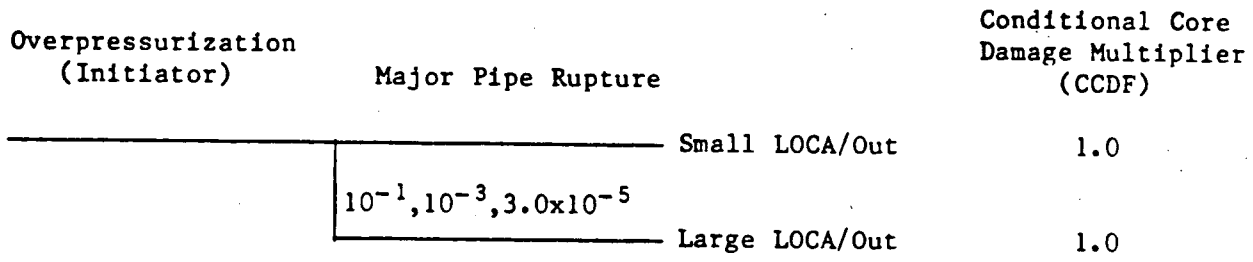

Figure 5.5 ISL event trees - RHR suction, Calvert Cliffs Station.

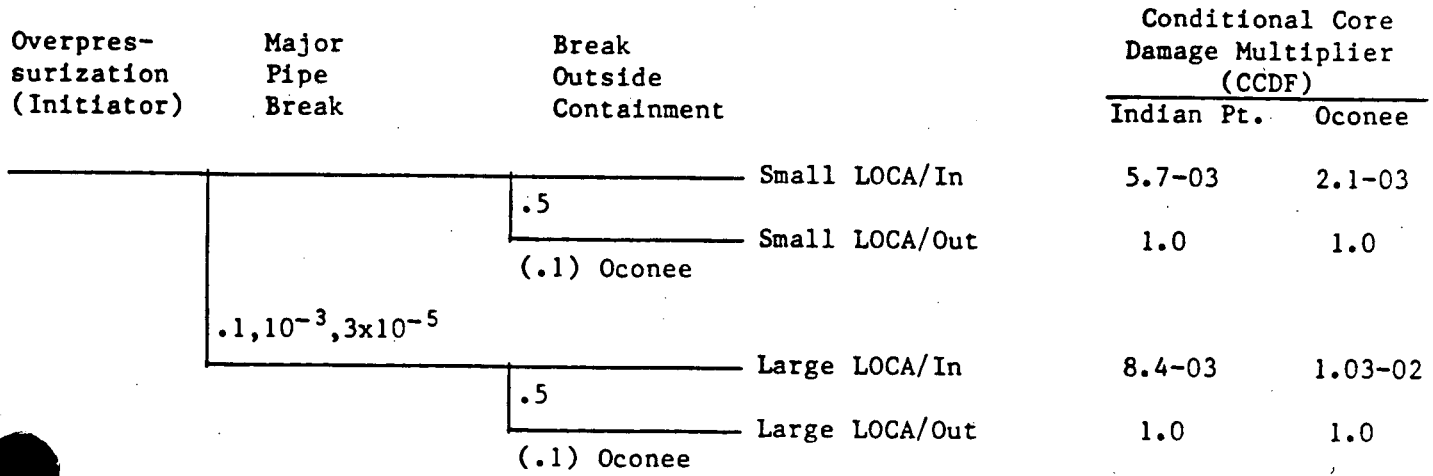

Figure 5.6 ISL event trees - RHR suction, Indian Point and Oconee Stations.

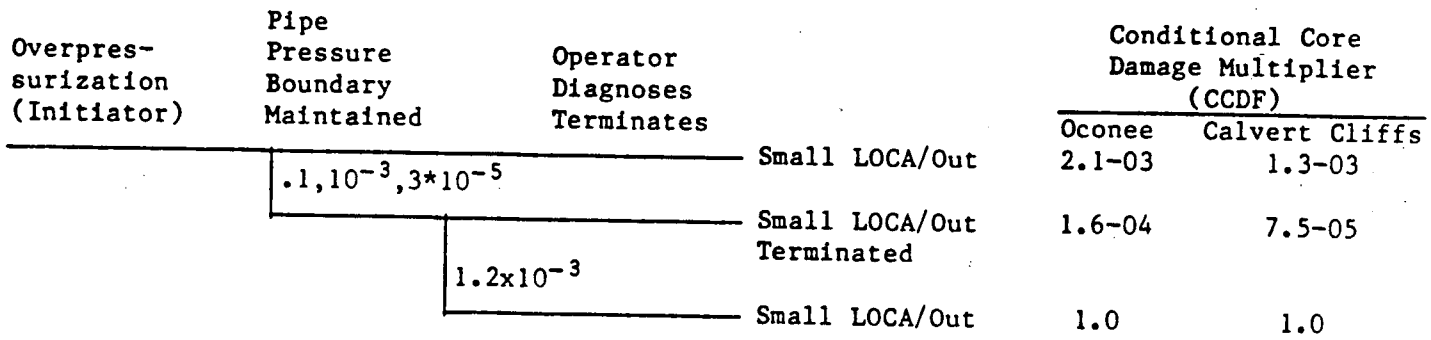

Figure 5.7 ISL event trees - Letdown lines, Oconee and Calvert Cliffs Stations.

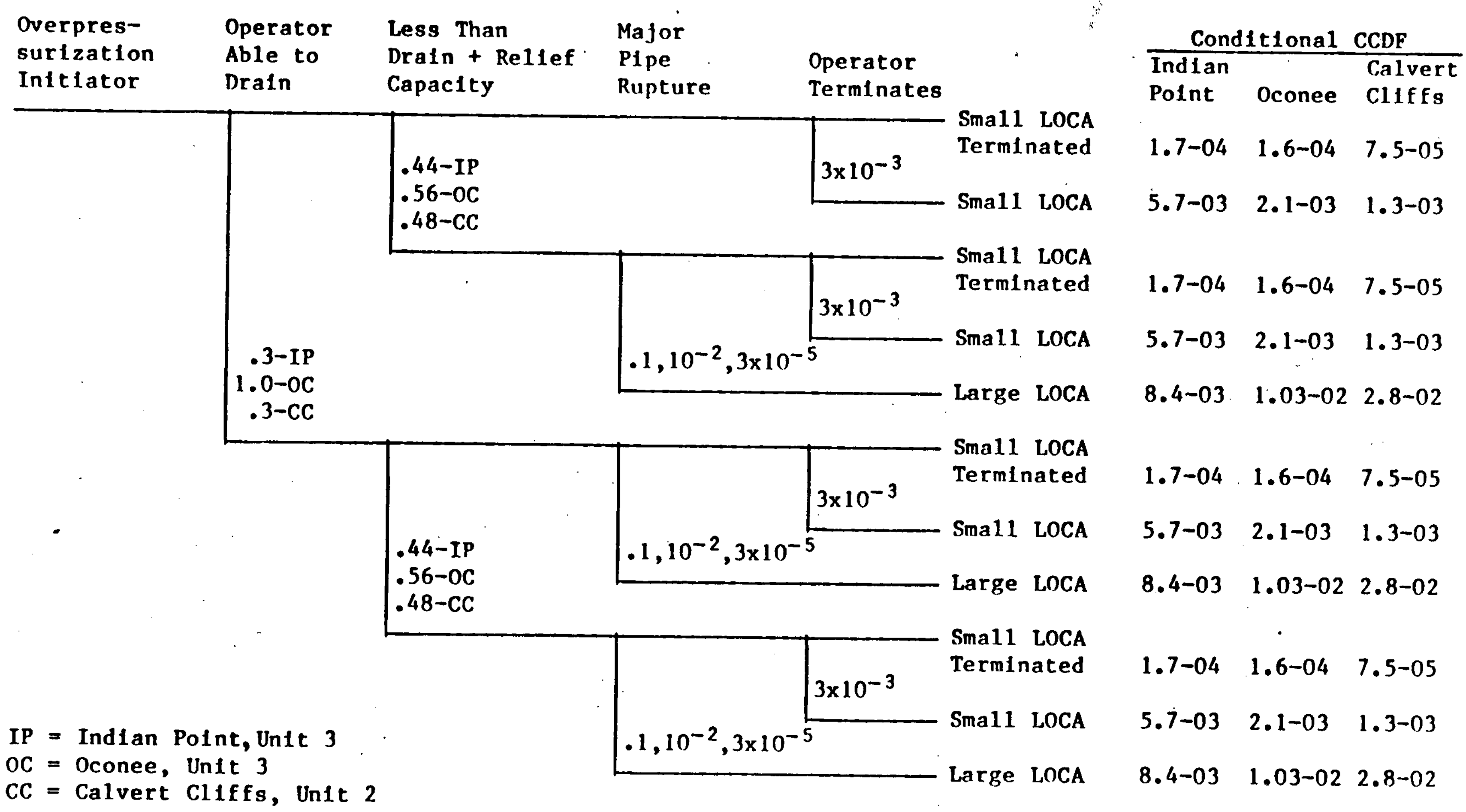

Figure 5.9 ISL event trees - Accumulators.

DRAFT

Table 5.1
Conditional Core Damage Frequencies for LOCAs

	Indian Point	Oconee	Calvert Cliffs
No Operator Action			
Large LOCA Inside Containment	8.4-03	1.03-02	2.8-02
Small LOCA Inside	5.7-03	2.10-03	1.3-03
Large LOCA Outside	1.0	1.0	1.0
Small LOCA Outside	1.0	1.0	1.0
LOCA Terminated by Operator			
Small LOCA Inside	1.7-04	1.6-04	7.5-05
Small LOCA Outside	1.7-04	1.6-04	7.5-05
Special Case			
Small LOCA Inside One Train of HP System Not Available	5.74-03		

DRAFT

Table 5.2a
Core Damage Frequency
Indian Point

System	Overpressurization Initiator	P(Rupture)	Sum of Event*CCDF	CDF/Year
LPI	5.33-06	1.00-01	1.91-01	1.02-06
		1.00-03	1.02-01	5.44-07
		3.00-05	1.01-01	5.38-07
SI*	1.39-04	1.00-01	9.12-02	1.27-05
		1.00-03	9.12-04	1.27-07
		3.00-05	2.74-05	3.81-09
RHR Suction	9.80-07	1.00-01	5.03-01	4.93-07
		1.00-03	5.03-01	4.93-07
		3.00-05	5.02-01	4.92-07
Letdown* (Includes relief valve opening)	2.28-03	1.00-01	7.73-05	1.76-07
		1.00-03	7.73-07	1.76-09
		3.00-05	2.31-08	5.77-11
Accumulators	4.64-03	1.00-01	6.85-04	3.18-06
		1.00-03	1.39-04	6.45-07
		3.00-05	1.35-04	6.26-07
TOTAL (CDF due to over-pressurization)		1.00-01		1.76-05
		1.00-03		1.81-06
		3.00-05		1.66-06

Note: P(Rupture) = Probability of a major pipe rupture.
*For this system P(Rupture) = Probability of pipe pressure boundary NOT maintained.

Table 5.2b
Core Damage Frequency Without Overpressurization
Indian Point

System	Initiator*	CCDF (Small LOCA)	CDF/Year
LPI	3.53-06	5.7-03	2.01-08
SI	4.13-04	5.7-03	2.35-06
RHR	1.70-05	5.7-03	9.69-08
Total (CDF w/o over-pressurization)			2.47-06

*No overpressurization relief valves open.

Table 5.3a
Core Damage Frequency
Oconee

System	Overpressuriztaion Initiator	P(Rupture)	Sum of Event*CCDF	CDF/Year
LPI	5.58-07	1.00-01	1.00	5.58-07
		1.00-03	1.00	5.58-07
		3.00-05	1.00	5.58-07
RHR Suction	1.44-06	1.00-01	1.00-01	1.44-07
		1.00-03	1.00-01	1.44-07
		3.00-05	1.00-01	1.44-07
Letdown* (Includes relief valve opening)	2.28-03	1.00-01	1.36-04	3.10-07
		1.00-03	1.36-06	3.10-09
		3.00-05	4.08-08	9.30-11
Accumulators	4.10-03	1.00-01	1.18-03	4.84-06
		1.00-03	1.76-04	7.72-07
		3.00-05	1.60-04	6.81-07
TOTAL (CDF due to over-pressurization)		1.00-01		5.85-06
		1.00-03		1.43-06
		3.00-05		1.38-06

Note: P(Rupture) = Probability of a major pipe rupture.
*For this system P(Rupture) = Probability of pipe pressure boundary NOT maintained.

Table 5.3b
Core Damage Frequency Without Overpressurization
Oconee

System	Initiator*	CCDF (Small LOCA)	CDF/Year
LPI	6.10-08	2.1-03	1.28-10
RHR	5.04-05	2.1-03	1.06-07
Total (CDF w/o over-pressurization)			1.07-07

*No overpressurization relief valves open.

Table 5.4a
Core Damage Frequency
Calvert Cliffs

System	Overpressurization Initiator	P(Rupture)	Sum of Event*CCDF	CDF/Year
LPI	3.40-09	1.00-01	1.00	3.40-09
		1.00-03	1.00	3.40-09
		3.00-05	1.00	3.40-09
SI*	7.18-10	1.00-01	1.00-01	7.18-11
		1.00-03	1.00-03	7.18-13
		3.00-05	3.00-05	2.15-14
RHR Suction	1.45-06	1.00-01	1.00	1.45-06
		1.00-03	1.00	1.45-06
		3.00-05	1.00	1.45-06
Letdown* (Includes relief valve opening)	2.28-03	1.00-01	1.27-04	2.90-07
		1.00-03	1.27-06	2.90-09
		3.00-05	3.81-08	8.69-11
Accumulators	5.98-03	1.00-01	1.85-03	1.11-05
		1.00-03	9.65-05	5.77-07
		3.00-05	7.92-05	4.74-07
TOTAL (CDF due to over-pressurization)		1.00-01		1.28-05
		1.00-03		2.03-06
		3.00-05		1.93-06

Note: P(Rupture) = Probability of a major pipe rupture.
*For this system P(Rupture) = Probability of pipe pressure boundary NOT maintained.

Table 5.4b
Core Damage Frequency Without Overpressurization
Calvert Cliffs

System	Initiator*	CCDF (Small LOCA)	CDF/Year
LPI	5.2-10	1.3-03	6.76-13
SI	3.2-09	1.3-03	4.16-12
RHR	1.75-05	1.3-03	2.27-08
Total (CDF w/o over-pressurization)			2.27-08

*No overpressurization relief valves open.

Table 5.5
Core Damage Frequency
Summary

Plant	P(Rupture)	Total CDF Due to Overpres-surization	Total CDF Without Overpres-surization	Total CDF/Year	CDF* in PRA (/Year)
Indian Point	1.00-01	1.76-05	2.47-06	2.01-05	1.18-04
	1.00-03	1.81-06		4.28-06	
	3.00-05	1.66-06		4.13-06	
Oconee	1.00-01	5.85-06	1.07-07	5.96-06	1.59-05
	1.00-03	1.45-06		1.54-06	
	3.00-05	1.38-06		1.49-06	
Calvert Cliffs	1.00-01	1.28-05	2.27-08	1.28-05	3.34-05
	1.00-03	2.03-06		2.05-06	
	3.00-05	1.93-06		1.95-06	

*Due to LOCA only.

Table 5.6
Core Damage Frequency Due to ISL
Bypassing Containment

Plant	P(Rupture)	Total CDF/Year ISL Outside Containment	CDF* in PRA (/Year)
Indian Point	1.00-01	1.27-06	1.18-04
	1.00-03	1.03-06	
	3.00-05	1.02-06	
Oconee	1.00-01	1.49-06	1.59-05
	1.00-03	7.05-07	
	3.00-05	7.02-07	
Calvert Cliffs	1.00-01	2.04-06	3.34-05
	1.00-03	1.45-06	
	3.00-05	1.45-06	

*Due to LOCA only.

APPENDIX B: Analysis of Valve Failure Data

This appendix provides the documentation of valve failure data used to calculate the initiator frequencies of Interfacing System LOCAs (ISLs) in various pathways. It describes the approach used in the derivation of new failure rates and gives the sources for those which were previously determined.

B.1 Check Valve Failure Rates

In the initiation of an ISL through ECCS injection lines, essentially three check valve failure modes are considered:

1. Check valve gross reverse leakage,
2. Check valve failure to operate on demand, and
3. Check valve disc rupture.

The following subsection discusses the data sources for each of the failure modes.

B.1.1 Check Valve Gross Reverse Leakage

B.1.1.1 General

In spite of the fact that various nuclear industry data sources have failure rate values for this failure mode, a cursory survey of the data showed, that the available data are not suitable for ISL analysis. The available data are related to a conglomerate of check valves of different type, size and make, which are built into various reactor systems. It was recognized at the start of the study, that the knowledge of the specific value of gross reverse leakage failure rate of check valves in the RCS/ECCS interface plays a crucial role in the ISL analysis. It was also recognized, that small or large leak flow rate result in markedly different accident developments. Therefore, it was clear that specific information was required about the frequency of exceeding certain leakage flows through the valves and that information needed to be able to be extracted from available data.

In order to satisfy above requirements, special data collection and analysis were performed and are described below.

B.1.1.2 Data Collection

A computer search was conducted in the LER data base for check valve failures occurring in the RCS/ECCS interface. The events selected were reported in Tables 3.1 and 3.3. Since then, the "efficiency" of the event selection has been cross-checked by conducting a similar search in the Nuclear Power Experience data source, which is an LER-based compilation of failure events. This new search and a comparison with the results of an independent search conducted at Pickard, Lowe and Garrick, Inc. for the Seabrook Station Risk Management and Emergency Planning Study (PLG-0432),[1] proved that our search process was highly efficient.

The cross-check covered the time period from 1972 to the end of 1985. The failure events selected are shown in Table B.1. The format of Table B.1 is somewhat different from the format of Table 3.1 and 3.3. The present format was developed to serve our further analysis. It contains the NPE number for facilitating better event identification, the name of the specific ECCS system involved (Accumulator, LPI, HPI) and direct or indirect information about the leak rate. The latter involves such evidences as: the rate of boron concentration changes and rate of pressure reduction in the accumulators. The table also contains the estimated leak rates. The approach used to estimate the leak rate was essentially similar to that of Ref. 1: the utilization of the direct or indirect flow rate information. If there were no such information available, the similarity to other occurrences for which the leak rates were known was applied.

An inspection of Table B.1 shows, that the majority of failure events are failures of the check valves in the accumulator outlet lines. This apparent bias might be due to the continuous monitoring of the accumulators, or it might reflect a particularly severe environment acting on the valves. An additional difficulty related to the interpretation of the leakage flow rates derived from accumulator inleakages. Accumulator inleakages from the RCS represent leakage through two check valves in series, where the less leaking

valve dominates (the other valve may even be wide open). Thus, the leakage flow rate values derived from RC leakage into the accumulators are essentially lower limits for these quantities. In order to clarify the causes of the apparent bias and extract maximum information from the data, the following event analysis was carried out.

B.1.1.3 Event Analysis

B.1.1.3.1 Event Categories

The failure events of Table B.1 were grouped into four categories:

1. Events whose description contains evidence of RC leakage into the accumulators. These events are considered to be accumulator inleakages through two failed check valves in series; A(2). The total number of A(2) events is: $N_{A(2)} = 28$. (It represents 56 check valve failures.)

2. Accumulator leakage events, whose description contains evidence only about one leaking check valve; A(1). (The water source is assumed not to be the RCS.) The total number of A(1) events is: $N_{A(1)} = 8$.

3. Leakage events of check valves in the common injection header of accumulator, LPI and HPI lines. Accumulator inleakages are not associated with these events. The leakages are directed into the LPI/HPI systems. These events are denoted by: LP. The total number of check valves in LP events is: $N_{LP} = 2$.

4. Leakage events of check valves on other HPI lines not associated with the accumulator injection header. These events are denoted by HP. There is only one such event in Table B.1; representing three check valve leakage failures: $N_{HP} = 3$.

Since our main concern is to find an explanation for the high frequency of failure events associated with the accumulators, the events in the first three groups are subject to further analyses.

B.1.1.3.2 Interpretation of Accumulator Leakage Events, A(2)

Succeeding steps in the data analysis require some further understanding about the possible origins of events A(2). For that purpose the schematic of the check valve arrangements at the RCS/Accumulator, LPI, HPI interface is presented in Figure B.1. The figure indicates the pressure conditions at the interface under ideal normal reactor operations when the check valves are perfect. P_1, P_2, and P_3 denote the pressures in the RCS, in the accumulator and in the LPI, HPI systems, respectively.

We are interested in the pressure conditions in the piping section between the check valves CV1, CV2, and CV3. (An additional check valve CV4 is also there if the design is such that the HPI line joins the LPI header downstream from CV3.)

It is easy to see that, when the check valves are operating, the pressure between the valves is that of the accumulator, P_2. Since $P_1>P_2>P_3$, (where P_2, the pressure of N_2 filling in the accumulator is much higher than P_3, the hydrostatic pressure of the RWST) the pressure differences across the check valves CV1 and CV3 (and CV4) keep these valves closed. However, the accumulator outlet check valve, CV2 is essentially open. Consequently, the seat of this check valve is exposed to various damaging affects of the highly borated water of the accumulator. Under unfavorable temperature conditions boron can be deposited onto the seat or hinges of the valve disc. The affects of boric acid are different at the other check valves. At CV1, whose temperature is about the same as that of the RCS, boric acid stays in solution. At CV3 (and CV4), the effect of boric acid is much smaller than at CV2, because these check valves are closed.

Consider now what happens when a back-leakage develops through CV1. (An original "disc failing open" failure mode of CV1 must be excluded from consideration, because CV1 and other similar "front line" check valves are leak tested after RCS depressurization to ensure disc seating.) The sudden, ruling pressure in the space between the valves will become P_1, and the valve CV2 will close. CV3 (and CV4) will close even tighter because of the increased pressure difference across their discs. CV1 will have RCS pressure

on both sides of its disc. At the same time, the check valves CV2 and CV3 (and CV4) will be exposed to the RC temperature. This is the situation, when CV2, CV3, and CV4 are operating. Due to the damaging effects of boric acid or boron deposition it is highly probable, however, that CV2 will not reclose.

Check valves also have a failure mode of "failure to operate (reseat) on demand" (see more about in in Section 1.2). The effects of boric acid may significantly enhance this probability for CV2. The effect of boric acid on CV3 (and CV4) is expected to be much less, because CV3 (and CV4) are always kept closed (unless they fail).

If CV2 recloses, it may develop backward leakage randomly in time with the same failure rate as previously CV1 had, because its disc is exposed now to the same differential pressure as previously CV1 was.

The level, pressure, temperature, and boric acid concentration of the accumulator is under constant surveillance. CV2 has high probability that is will not reclose completely upon demand. Consequently, even small leaks through CV1, have high potential for discovery.

Thus, it can be concluded, that the combination of two effects, the constant surveillance of the accumulators and the high probability that CV2 fails to operate on demand because of boric acid effects, provides a reasonable explanation for the high occurrence frequency of accumulator events, A(2).

The frequency of these events can be described by the expression given below (for more details see Section 4.3 of the main text, discussing the determination of ISL initiator frequencies for LPI pathways):

$$\lambda_{A(2)} = 2\lambda_1\left(\frac{\lambda_2 T}{2} + \lambda_{d2}\right) \equiv 2\lambda_1 C \qquad (1)$$

where, λ_1 and λ_2 the gross backward leakage failure rates of check valves CV1 and CV2, respectively,

λ_{d2} is the enhanced failure probability of CV2 to operate on demand,

T is normally the time interval between the leak tests of CV1, when there is no other means to discover valve failures. Since the accumulators are constantly monitored, it is, T=0.
The quantity C, may be considered as "an effective leakage failure probability" of CV2.
λ_{d2} is expected to be much higher than the first term in the parenthesis. Thus, C is practically equal to the enhanced failure probability of CV2 to operate on demand.

B.1.1.3.3 Interpretation of Accumulator Leakage Events, A(1)

In order to interpret the origin of these events we refer again to the valve configuration shown in Figure B.1. Consider the case, when CV1 is perfectly seated. Leakage into the accumulator through CV2 still can occur, if:

a) for some reasons, the N_2 pressure in the accumulator, P_2 falls below the hydrostatic pressure of the RWST, P_3 (i.e., $P_3>P_2$) and CV2 does not reclose upon this challenge, or

b) for some reasons, e.g., due to inadvertent initiation of the HPI pumps the pressure in the space between the valves suddenly increases such that $P_3>P_2$ and CV2 does not operate upon this demand. Since these failure events are not associated with RC inleakage into the accumulators they are not analyzed further.

B.1.1.3.4 Interpretation of Leakage Events, LP

For the interpretation of these events we refer again to Figure B.1. We recall the situation described in Section B.1.1.3.2, when CV1 leaks and CV2 is operating. i.e., CV2 recloses upon demand and does not develop leakage randomly. If there is no safety valve connected to the space between the valves, the overpressurization of the space between the valves is hard to detect. Leakage tests on CV1 leads to the discovery of the valve failure.

Consider now the case when both check valves, CV1 and CV2 are operating, but CV3 or CV4 leaks ($P_2 > P_3$). It is hard to detect the failure because successive check valves upstream in the injection lines will probably reclose. As in the former case, leakage test leads to the discovery of the failures.

The frequency of LP events, i.e., the frequency of check valve back leakage failures which are not accompanied by check valve failure in the accumulator line, can be described by the expression:

$$\lambda_{LP} = \lambda_1(1-C), \qquad (2)$$

where λ_1 is the leakage failure rate of the individual check valves (considered to be the same for each check valve, CV1, CV3, or CV4) and C is the "effective leakage failure probability of CV2" defined in expression (1).

Additional failure combinations of CV1 and CV3, or CV1 and CV4 are discussed in Section 4.3, of the main text, where the ISL initiator frequencies are calculated.

B.1.1.4 Data Reduction

B.1.1.4.1 General

The following approach has been applied in the data reduction:

1) Expressions (1) and (2) are equated to the maximum occurrence frequencies of events A(2) and LP. The obtained system of equations is solved for the "effective leakage probability," C of the accumulator check valve, CV2.

2) Expressions (1) and (2) are equated to the experienced frequences of events A(2) and LP in various leak rate groups. By solving the equations for the leakage failure rate, a leakage exceedance frequency versus leak rate curve is calculated.

B.1.1.4.2 Determination of the Effective Leakage Probability, C for the Accumulator Check Valve, CV2

The maximum occurrence frequencies (frequency/hour) of events A(2) and LP are determined by using expressions (1) and (2), respectively, as follows:

$$\lambda_{A(2)}^{max} = 2\lambda_1^{max}C = \frac{2N_{A(2)}}{T_A}, \qquad \text{(I)}$$

and

$$\lambda_{HP}^{max} = \lambda_1^{max}(1-C) = \frac{N_{LP}}{T_{LP}}, \qquad \text{(II)}$$

where λ_1^{max} denotes the maximum LP leakage failure frequency,
$N_{A(2)}$ and N_{LP}, are the total number of failure events of event categories (1) and (3) (see Section B.1.1.3.1),
T_A and T_{LP} the total number of check valve $\geq$ hours for check valve populations in accumulator and LPI lines, respectively at all PWRs.

The solution of the system of equations (I) and (II) for C, is:

$$C = \frac{N_{A(2)}}{N_{A(2)} + N_{LP}k}, \qquad \text{(III)}$$

where $k = T_A/T_{LP}$, $N_{A(2)} = 28$, $N_{LP} = 2$ (from Section B.1.1.2.1).

The total number of check valve hours, $T_{A(2)}$ and T_{LP} are given in Table B.2, as:

$T_{A(2)} = 2.369\text{x}10^7$ and $T_{LP} = 2.266\text{x}10^7$.

Additional details about the determination of total number of check valve hours are discussed in Section B.1.1.4.4.

From the data above the "effective leakage probability" of the accumulator check valve, CV2 is (k=1.045):

$$C = .93 \qquad \text{(III')}$$

As it was explained in Section B.1.1.3.2, C is practically equal to the probability of "failure to operate on demand" of CV2. The value is high because of the presence of the boric acid. The valve obtained is in agreement with the expectation.

The significance of the high value of C for the initiation of ISLs through LPI lines is important. It means that CV2 behaves as a kind of safety valve and the preferred direction of the ISL will be through the accumulator and not through the LPI (or HPI) pathways.

B.1.1.4.3 Calculation of a Leakage Exceedance Frequency Versus Leak Flow Rate

The leakage events, A(2) can LP, were grouped into five leak flow ranges. For each group, a frequency per hour value is calculated by using the total check valve hours given above. By equating expressions (1) and (2) to the frequencies of the i-th leak flow range one obtains the following system of equations:

$$\lambda_{A(2)}{}^{(i)} = 2\lambda_1(i)C = \frac{2\eta_{A(2)}{}^{(i)}}{T_A} \qquad (I')$$

$$\lambda_{LP}(i) = \lambda_1(i)(1-C) = \frac{\eta_{LP}{}^{(i)}}{T_{LP}} \qquad (II')$$

Here, $\lambda_1(i)$ denotes the leakage failure frequency of a check valve in the i-th leak flow range and $\eta_{A(2)}(i)$ and $\eta_{LP}(i)$ are the number of leakage events of event categories (1) and (3) in the i-th leak flow range.

Solving the system of equations (I') and (II') for $\lambda_1(i)$, one obtains:

$$\lambda_1(i) = \frac{1}{T_{LP}} \left(\eta_{LP}(i) + \frac{\eta_{A(2)}{}^{(i)}}{k}\right)$$

Considering, that k≈1.0,

$$\lambda_1(i) \approx \frac{1}{T_{LP}} (\eta_{LP}(i) + \eta_{A(2)}(i)) \qquad \text{(III')}$$

Table B.3 shows the sum of leakage events and the leakage failure frequencies calculated according to formula (III') for the five leak flow ranges. Table B.3 shows also the corresponding cumulative frequency values. The cumulative frequency values are also plotted as a function of the leak flows in Figure B.2.

The cumulative frequency values are fitted graphically with a straight line (on a log-log scale) to facilitate inter- or extrapolation. The application of straight line fit is supported by the generic experience, that "percolation type" physical process, like leakage through two openings, follow exceedance frequency distributions of Pareto type (i.e., a kind of power low).

It has to be recognized that the curve in Figure B.2 is only a first approximation for a more precise leak exceedance frequency versus relative leak rate curve, which should be based on single valve leakage data and more homogeneous check valve sizes.

For further applications of the exceedance leak frequency data, a stretched statistical range factor (ratio of the 95th to the 5th percentile of lognormal probability density function), RF=10 is assigned to them (stretched from RF=4). This large value accounts for the uncertainty in the classification and leak flow rate grouping of the data, estimation of the total exposure time and applicability of the approach used for event interpretation and data reduction.

B.1.1.4.4 Total Exposure Times of Check Valves in Accumulator and LPI Lines

This section provides some additional information about the determination of total exposure times for check valves in the accumulator and LPI lines.

Table B.2 details the accumulator and LPI check valve hours for each PWR considered and presents the total exposure times, $T_{A(2)}$ and T_{LP}. Usually the FSARs of various PWRs were used to obtain the number of check valves in the relevant lines. The total time from start of commercial operation of the individual plants was taken as "time of exposure per check valve." This was done because corrosion effects (e.g., corrosion due to boric acid) continuously degrade the internals of the valves.

B.1.2 Check Valve Failure to Operate on Demand

B.1.2.1 General

The situation, concerning the usefulness of the available data sources on "check valve failure to operate on demand" failure mode, was similar to that of the reverse leakage failure mode discussed in Section B.1.1.1. The data sources do not specify "failure to open" and "failure to close" modes separately and there is no data on the subsets of check valves in the interfacing lines.

B.1.2.2 Data Collection

From a larger set of failure events collected with the search process described in Section B.1.1.2 a subset was selected which is considered to be representative for check valve fails to reclose stuck open mode. The events are listed in Table B.4, whose format is similar to Table B.1. From all the events listed the LPI and HPI events are taken to estimate the probability of the failure mode. The total number of failed check valves involved in these events are 9.

The corresponding success data (number of demand) are developed on the LPI check valve population and plant age. The HPI check valve population in the interfacing lines is assumed to be equal to that of the LPI. An average of 10 system wide demands per year is considered for the success estimate.

B.1.2.3 Data Reduction

The total number of check valve years for LPI check valves from Table B.2 is 2.587×10^3. This value based on the above considerations results in the following total number of check valve demands in the LPI and HPI interfacing lines: Check valve demands (LPI and HPI) = $2 \times 10 \times 2.587 \times 10^3 = 5.174 \times 10^4$.

The corresponding probability of failure to reclose on demand is

$$\lambda_d^{Median} = \frac{9}{5.174 \times 10^4} = 1.74 \times 10^{-4} \text{ per demand.}$$

The range factor assigned to characterize the uncertainty is RF=5. Thus,

$\lambda_D^{Mean} = 2.81 \times 10^{-4}$ per demand, and the expectation value of its square is:

$$\langle \lambda_D^2 \rangle = (\lambda_D^{Mean})^2 + \text{var.} = 2.05 \times 10^{-7} \text{ per demand}^2 .$$

The result obtained is in agreement with that of obtained in Ref. 1 applying different basic data:

$$\lambda_d(\text{Median}) = 1.58 \times 10^{-4} \text{ per demand.}$$

B.1.3 Check Valve Disc Rupture

Till the end of 1985 the nuclear industry had not reported any check valve disc rupture events. The closest failure event to this category is what happened at Davis Besse-1 (NPE # VII.A.273, IE Info. Notice 80-41) when a disc and arm had separated from the body in an LPI isolation check valve. The PSA Procedures Guide[2] lists an estimated value based on expert opinions for the disc rupture failure rate, as 1.0×10^{-7}/hour. The guide's value practically coincides with the exceedance frequency of the maximum experienced leak flow (200 gpm) in Figure B.2. Since there is no experienced event for this failure made in the nuclear industry, the leakage failure rates applied in this study are considered as conservative upper bounds for the disc rupture frequency.

B.2 Motor-Operated Valve Failure Rates

The following failure modes of MOVs are considered in the calculation of ISL initiator frequencies:

1. MOV disc rupture.
2. MOV internal leakage.
3. MOV disc failing open while indicating closed.
4. MOV transfer open.
5. MOV failure to close on demand.
6. MOV gross (external) leakage.

The subsection below discusses the data sources for each of the failure modes.

B.2.1 MOV Disc Rupture

Available data sources had no data on this catastrophic MOV failure mode based on experienced data. A LER search for this failure mode at PWRs could not identify any such event. However, a search conducted for the study of ISLs at BWR[3] found five events in which valve disc was separated from the stem. The MOV disc rupture failure rate estimated in that study is: 1.37×10^{-7} per hour. This value is applied also in the present calculations.

B.2.2 MOV Internal Leakage

This failure mode represents failures in which MOV leaks because of seat wear or other reasons. The failure mode is assumed to result in limited leakage through the valve. An LER search performed to identify such failures in motor-operated isolation valves. Three events were found in RHR suction valves. These are special valves with double discs (see Table 3.2). The total number of RHR suction valve-hours was calculated by using the number of reactor years of Table B.2 and RHR suction valve population of two or four per reactor for plants starting commercial operation before or after 1981. The total number of RHR suction valve-hours is 8.743×10^{6}. Therefore, the internal leakage failure rate for MOV events divided by the number of valve hours is

3.43×10^{-7} per hour. Estimated range factor, RF=5. The corresponding mean value, λ_{MOV}^{Mean}: 4.85×10^{-3} per year. The expectation value of its square, $\langle \lambda_{MOV}^2 \rangle = (\lambda_{MOV}^{Mean})^2 + var. = 6.12 \times 10^{-5}$ per year^2.

B.2.3 MOV Disc Failing Open While Indicating Closed

This type of failure mode may arise at MOVs, which are not equipped with stem-mounted limit switches from gear drive disengagement. At valves which are equipped with limit switches it arises from failure of the stem or other internal connections or failure of a limit switch (including improper maintenance such as reversing indication). The failure may occur after the valve being opened. As a result, the valve is leaking while the indication in the control room signals that the valve is closed. It is expected, that this failure mode is giving rise small leakage.

The failure rate applied in this study is taken from the Seabrook PSA,[4] where it was obtained from data reported in NPE. The mean frequency of "failure of an MOV to close on demand and indicate closed" is 1.07×10^{-4}/demand.

B.2.4 MOV Transfer Open

"MOV transfer open" failure mode defines such MOV failure, when a closed MOV inadvertently opens due to failures of valve control circuits and power supplies or due to human errors during test or maintenance.

In the Seabrook PSA[4] the failure rate of this failure mode was estimated by using generic data to be 9.2×10^{-8} per hour. Table 4.4 has two events which can be classified as "MOV transfer open" failures for RHR suction valves. Taking the total RHR suction valve-hours, $T=8.743 \times 10^6$ and these two events, one obtains a median failure rate of: 2.29×10^{-7} per hour. Estimated range factor: RF=5.

B.2.5 MOV Failure to Operate on Demand

MOV failure to operate on demand represents MOV failures in which a closed MOV suddenly opens upon demand, e.g., as various kind of shocks like pressure wave, sudden stress increases due to mechanical or thermal causes. This failure mode of MOV is a failure mode of "dependent" type and different from the retainer rupture failure mode of MOVs, which is a failure mode of random type.

An LER search to identify such events was futile. Therefore, in the calculation of ISL initiator frequencies instead of a guessed estimate the corresponding "check valve failure to operate on demand" (see Section B.1.2) failure rate is used as bounding value.

B.2.6 MOV External Leakage/Rupture

This failure mode of the MOVs is the most visible and detectable. The failure rate is given in various data sources. The data sources, however, do not provide information about the exceedance frequency of the failure as a function of the leak flow rate. A cursory review of some failure event reports showed that there is no appropriate information in the event descriptions about the leak rate. The LER search for failures of MOVs in the interfacing lines did not detect the occurrence of this failure mode. Thus, for the present report the generic value given in NUREG/CR-1363[3] for PWRs is taken. The failure frequency of MOV external leakage/rupture mode is 1.0×10^{-7} per hour. As first approximation to the variation of this value with the leak flow rate, the exceedance frequency vs. leak flow rate curve for check valves (Section B.1.1.4.3) is used.

B.3 References

1. "Seabrook Station Risk Management and Emergency Planning Study," PLG-0432, December 1985.

2. R. A. Bari et al., "Probabilistic Safety Analysis Procedures Guide," NUREG/CR-2815, August 1985.

3. L. Chu, S. Stoyanov, R. Fitzpatrick, "Interfacing Systems LOCA at BWRs," Draft Letter Report, July 1986.

4. "Seabrook Station Probabilistic Safety Assessment," PLG-0300, December 1983.

5. W. H. Hubble, C. F. Miller, "Data Summaries of LERs of Values," June 1980.

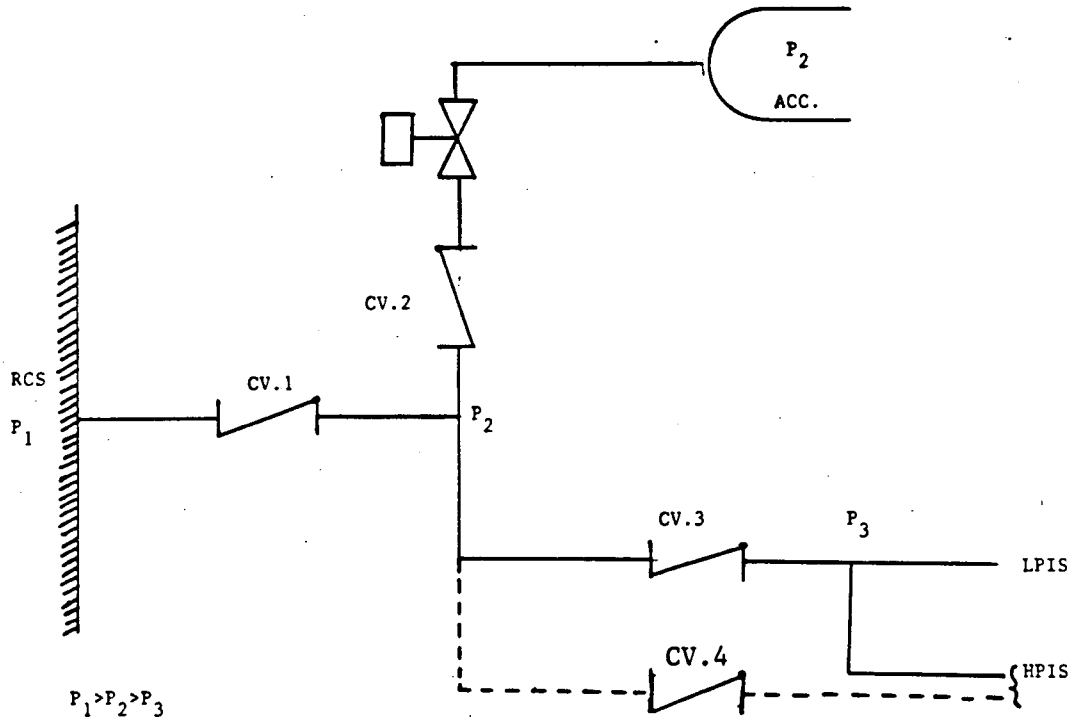

Figure B.1 Schematic of the valve arrangement at the RCS/ Accumulator, LPIs, HPIs interface. (An alternative joint of the HPI line to the LPI header is indicated by a broken line.)

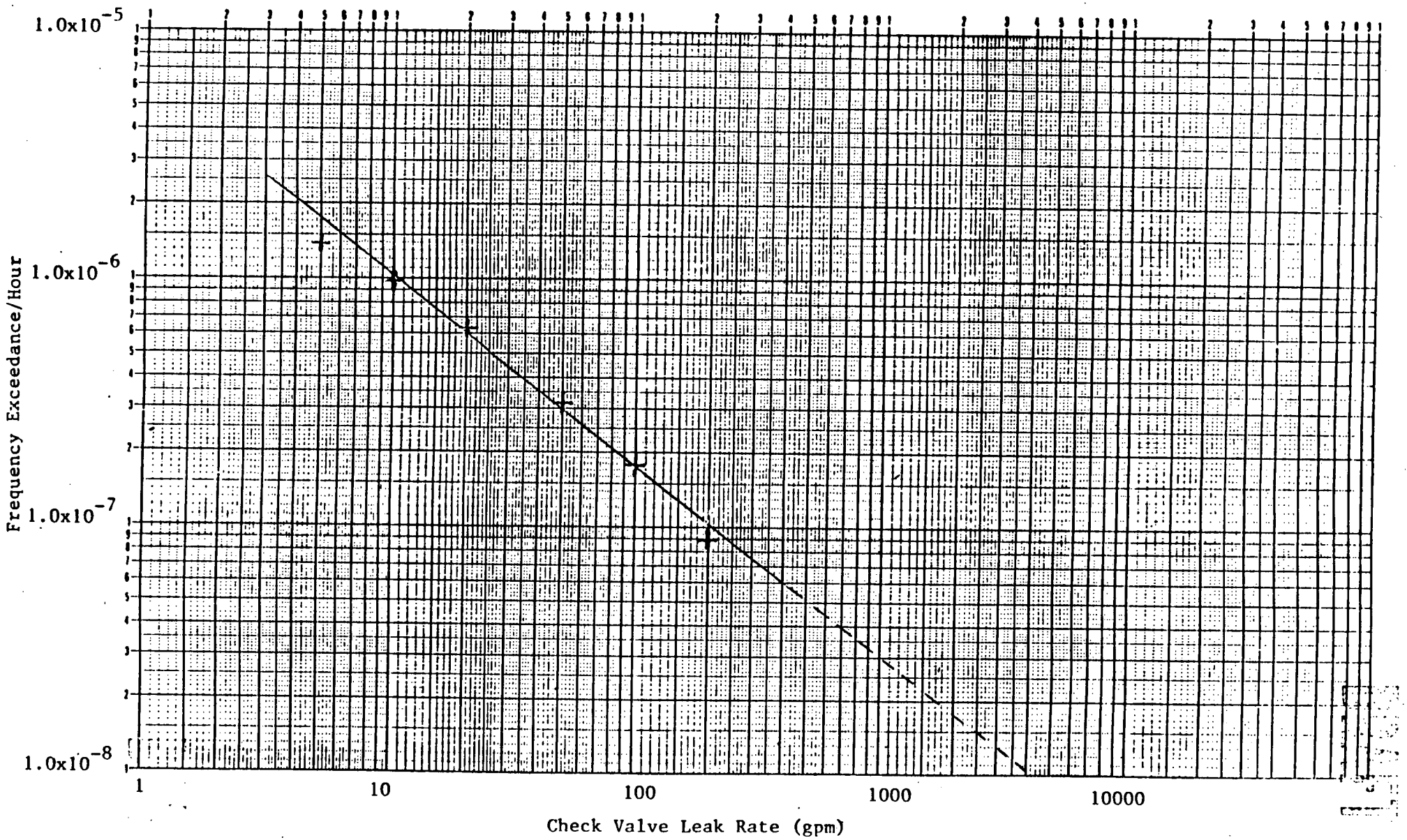

Figure B.2 Frequency of RCS/Accumulator, LPI pressure isolation check valve leakage events.

Table B.1

Summary of Operating Events, Emergency Core Cooling System, Isolation Check Valves, Leakage Failure Mode

Reference (NPE #)	Plant	Date	ECCS System	Event Description	Number of Check Valves Failed	Estimated Leak Rate (gpm)
VII.A.13	Palisades	5/72	ACC	Leakage into SI tank. The internals of a check valve on the outlet of an SI tank was incorrectly assembled.	1	<5
VII.A.25	Main Yankee	12/72	ACC	Leakage into SI tank. A small piece of weld slag had lodged under the seal of the outlet check valve allowing back leakage. Dilution: 1700 ppm (limit is 1720 ppm).	1	<5
VII.A.32	Turkey Point	5/73	HPI	One of the three check valves in the SI lines developed a leakage of 1/3 gpm. Two other check valves showed only slight leakage. Failure of soft seats.	3	$\leq .33$
VII.A.63	Ginna	9/74	ACC	Leakage of a check valve caused boron dilution in ACC. "A" (from 2250 ppm to 1617 ppm).	1	<20
VIII.A.85	Surry 1	8/75	ACC	Check valve did not seat. ACC ("1C") level increased. Leakage rate: ≈6 gpm.	1	<10
VII.A.126	Zion 2	10/75	ACC	Wrong size gasket installed in the check valve for ACC. "A". Leak rate: ≈.25 gpm.	1	$\leq .25$
VII.A.105	Robinson 2	1/76	ACC	Accumulator ("B") inleakage through leaking outlet check valve.	1	<20
V.A.122	Zion 1	6/76	ACC	Inleakage to ACC. "1D" from RCS.	2	<20
VII.A.114	Surry 1	7/76	ACC	Two check valves in series (1-SI-128, 130) leaked causing boron dilution in ACC. "B".	2	<10
VII.A.120	Surry 2	8/76	ACC	Boron dilution (from 1950 ppm to 1893) in SI ACC. "C" caused by leaking check valves (2-SI-145, 147).	2	<10
VII.A.225	Millstone 2	4/77	ACC	Inleakage of RC through outlet check valves to SI tank "4". Low boron concentration. Five occurrences in 1977.	2x6	<20
VIII.A.182	Calvert Cliffs 2	9/78	ACC	Outlet check valves for SI tanks 21B and 22B leaked. Boron concentration reduction from 1724 and 1731 ppm to 1652 and 1594 ppm in one month period.	4	<10 <10

Table B.1 (Continued)

Reference (NPE #)	Plant	Date	ECCS System	Event Description	Number of Check Valves Failed	Estimated Leak Rate (gpm)
VII.A.262	Crystal River 3	7/80	ACC	Check valve CFV-79 to core flood tank failed. The isolation valve to the N_2 system was open for N_2 mixing. ≈500 gallon liquid entered the N_2 system and ≈20 gallons was released. The corresponding activity released estimated as 1.07 mCi.	1+1	$100 < \gamma < 200$
VII.A.273 IE Info. Notice 80-41	Davis Besse 1	10/80	ACC	RHR system isolation check valve CF-30 leaked back excessively. Valve disk and arm had separated from the valve body. Bolts and locking mechanism were missing. Core flood tank overpressurized.	2	$50 < \gamma < 100$
VII.A.291	Surry 2	1/81	ACC	Accumulator ("C") boron diluted. Check valve (1-SI-144) leaked. Flushing system improperly set up, resulting in charging system pressure to exist on the downstream side of the check valve.	1	$\gamma < 10$
VII.A.301	Palisades	3/81	ACC	Leakage of RC into the SI tank (T-823).	2	$\gamma < 5$
VII.A.306	McGuire 1	4/81	ACC	Accumulator "A" outlet check valves IN-159 and IN-160 were leaking. RCS pressure: 1800 psig. Acc. pressure: 425 psig. Water level above alarm setpoint.	2	$\gamma < 10$
VII.A.307	McGuire 1	4/81	ACC	Similar events with Accs. "C" and "D".	2x2	$\gamma < 10$ $\gamma < 10$
VII.A.343	Point Beach 1	10/81	LPI	RCS/LPI isolation check valve (1-853C) leaks in excess of acceptance criteria (>6 gpm).	1	$\gamma < 10$
VII.A.384	Calvert Cliffs 1 & 2	7/82	ACC	Acc. outlet check valve at Unit 1 leaked due to deterioration of the disk sealing o-ring. The o-ring material has been changed on all check valves of Unit 1 and 2 1/2 SI-215, 225, 235, and 245.	2	$\gamma \leq 200$
VII.A.403	Surry 2	9/82	ACC	Acc. outlet check valve (2-SI-144) leaked RCS water into tank "C" during a pipe flush resulting in low boron concentration.	1	$\gamma < 20$
VII.A.396	Palisades	9-12/82	ACC	Minor leakage into SI tank (compounded by level indication failure) via check valve leakages.	2	$\gamma < 5$

Table B.1 (Continued)

Reference (NPE #)	Plant	Date	ECCS System	Event Description	Number of Check Valves Failed	Estimated Leak Rate (gpm)
VII.A.407	McGuire 1	5/83	ACC	RCS water inleakage through outlet check valves IN-170 and IN-171, resulting in low boron concentration in CLA "B".	2	$20<\gamma<50$
VII.A.437	Farley 2	9/83	LPI/ HPI	SI check valve to loop 3 cold leg was excessively leaking, incomplete contact between the valve disk and seat.	1	$50<\gamma<100$
LER 84-001	Oconee 1	3/84	ACC	Accumulator ("A") inleakage through leaking valves. Administrative deficiency, no management control over a known problem (since 8/83).	2	$\gamma<5$
V.F.0043 LER 84-012	Palisades	7/84	ACC	Accumulator inleakage through leaking check valves CK-3146 and CK-3116.	2	$\gamma<5$
VII.A.452	St. Lucie 2	12/84	ACC	Inleakage to SI tank. Seal plate cocked, valve seat compensating joint ball galled.	2	$20<\gamma<50$
VII.A.456	Calvert Cliffs 1 & 2	1/85	ACC	Inleakage to safety injection tanks through check valve, o-ring material degradation (Unit 1 = 1.6 gpm, Unit 2 = 27.2 gpm).	2	$\gamma<5$ $20<\gamma<50$
VII.A.457	McGuire 1	4/85	ACC	Low accumulator boron concentration.	2	$\gamma<5$
LER 85-007	Palisades	6/85	ACC	Inleakage from the RCS. Low level boron concentration.	2	$\gamma<5$
VII.A.474	Palisades	11/85	ACC	Accumulator (SIT-82D) inleakage from RCS Boron dilution (see Note 1).	2	$\gamma<5$

Note 1: The Palisades unit has a chronic accumulator inleakage problem.

Table B.2
Accumulator and LPI Check Valve Exposure Data

Plant Name	Start of Commercial Operation	Number of Years	Number of Accumulator Check Valves	Total Number of Accumulator Check Valve-Hrs. (10^5 Hours)	Number of LPI Check Valves	Total Number of LPI Check Valve-Hrs. (10^5 Hours.)
Arkanasas Nuclear One 1	December 1974	11.08	4	3.882	4	3.882
Crystal River 3	March 1977	8.83	4	3.094	4	3.094
Davis-Besse 1	November 1977	8.16	4	2.859	4	2.859
Oconee 1	July 1973	12.50	4	4.380	4	4.380
Oconee 2	March 1974	11.83	4	4.145	4	4.145
Oconee 3	December 1974	11.08	4	3.882	4	3.882
Rancho Seco	April 1975	10.75	4	3.767	4	3.767
Three Mile Island 1	September 1974	11.33	4	3.970	4	3.970
Three Mile Island 2	December 1978	7.08	4	2.481	4	2.481
Arkansas Nuclear One 2	March 1980	5.83	8	4.086	8	4.086
Calvert Cliffs 1	May 1975	10.67	8	7.478	12	11.217
Calvert Cliffs 2	April 1977	8.75	8	6.132	12	9.198
Fort Calhoun	September 1973	12.33	8	8.641	2	2.160
Millstone 2	December 1975	10.08	8	7.064	16	10.596
Maine Yankee	December 1972	13.08	6	6.875	9	10.312
Palisades	December 1971	14.08	8	9.867	2	2.467
St. Lucie 1	December 1976	7.08	8	6.363	8	6.363
Beaver Valley 1	April 1977	8.75	6	4.599	6	4.599
[illegible] C. Cook 1	August 1975	10.42	8	7.302	4	3.651
[illegible] C. Cook 2	July 1978	7.50	8	5.256	4	3.651
Indian Point 2	July 1974	11.50	8	8.059	9	8.954
Indian Point 3	August 1976	9.42	8	6.602	9	7.427
Joseph M. Farley 1	December 1977	8.08	6	4.247	6	4.247
Kewaunee	June 1974	11.58	4	4.058	4	4.058
North Anna 1	June 1978	7.58	6	3.984	8	5.312
Prairie Island 1	December 1973	12.08	4	4.233	3	3.175
Prairie Island 2	December 1974	11.08	4	3.882	3	2.588
Point Beach 1	December 1970	15.08	4	5.284	3	3.523
Point Beach 2	October 1972	13.25	4	4.643	3	3.095
R. E. Ginna 1	March 1970	15.83	4	5.547	-	---
H. B. Robinson 2	March 1971	14.83	6	7.795	2	2.598
Salem 1	June 1977	8.50	8	5.957	6	4.668
Surry 1	December 1972	13.08	6	6.875	6	6.875
Surry 2	May 1973	12.67	6	6.659	6	6.659
Trojan	May 1976	9.67	8	6.777	6	5.083
Turkey Point 3	December 1972	13.08	6	6.875	2	2.292
Turkey Point 4	September 1973	12.33	6	6.481	2	2.160
Yankee Rowe	June 1971	14.50	2	2.540	-	---
Zion 1	December 1973	12.08	8	8.466	14	14.816
Zion 2	September 1974	11.33	8	7.940	14	13.895
McGuire 1	December 1981	4.08	8	2.859	14	5.003
Sequoyah 1	July 1981	4.50	10	3.942	14	5.519
Sequoyah 2	June 1982	3.58	10	3.136	14	4.390
San Onofre	January 1968	18.0	-	---	3	4.730
[illegible]ddam Neck	January 1968	18.0	-	---	3	4.730
TOTAL				2.369(2)		2.266(2)

Table B.3
Statistical Data on Leakage Events of Pressure Isolation Check Valves to Accumulators and LPI Systems

Leak Rate (gpm)	Number of Leakage Events (A(2) + LP)	Frequency of Occurrence (per hour)	Frequency of Exceedance (per hour)
5	8	3.53(-7)	1.32(-6)
10	8	3.53(-7)	9.71(-7)
20	7	3.03(-7)	6.18(-7)
50	3	1.32(-7)	3.09(-7)
100	2	8.83(-8)	1.77(-7)
200	2	8.83(-8)	8.83(-8)

Table B.4

Summary of Operating Events, Emergency Core Cooling System, Isolation Check Valves, "Failure to Operate on Demand" Failure Mode

Reference (NPE #)	Plant	Date	ECCS System	Event Description	Number of Check Valves Failed
VII.A.175	San Onofre 1	5/78	LPI	Tilting disk check valve failed to close with gravity. It was installed in a vertical rather than a horizontal pipeline.	1
VII.A.270	Sequoyah 1	9/80	HPI	SI check valve 63-635 was found to be stuck open. It was caused by interference between the disk nut lockwire tack weld and the valve body.	1
VII.A.285	Salem 1	12/80	HPI	SI check valve failed to close during a test. It is an interface between RCS hot leg and SI pumps. Valve was found to be locked open due to boron solidification during the last refueling.	1
VII.A.294	Oconee 1	2/81	LPI	Reactor vessel LPI loop "B" isolation valve (GCF-12) leaked excessively during LOCA leak test. The valve disk had become frozen at the pivot in a cocked position. Buildup of deposit in the gap between the hinge and disc knob caused the freezing.	1
VII.A.302	Oconee 3	3/81	LPI	Similar to event at Unit 1 (valve involved is 3 CF-13).	1
VII.A.310	McGuire 1	5/81	ACC	Leak test damaged acc. check valves - seat type changed.	2
VII.A.311	McGuire 1	5/81	ACC	Acc. check valves failed.	2
VII.A.315	Point Beach 1	7/81	LPI	RCS/LPI isolation check valves 1-853 C and D were found to be stuck in the full open position. High leakage rate.	2
VII.A.392	ANO-2	10/82	HPI	SI isolation check valves 2 SI-13C and 2 SI-13B stuck in the open position during test requested by IE Notice 81-30. Disk stud protruded above nut, disk misaligned.	2

APPENDIX C: Operator Diagnosis and Post-Diagnosis Performance

Human behavior in response to an event, especially an abnormal event in a nuclear power plant, can be considered in three phases of activity: (1) observation of the event, (2) recognizing and/or diagnosing it, and (3) responding to it. Errors in each of these phases can be considered separately. However, there is much interaction between the various phases. In particular, phases 1 and 3 are very much controlled by phase 2 - the diagnosing stage. Failures in this stage are the most significant and basically constitute failures in cognitive behavior. The term cognitive behavior refers to the behavior that comprises structuring information, conceptualizing root causes and developing a response.

In regard to an abnormal event in a nuclear power plant cognitive behavior on the part of the operator consists of identifying the nature of the event, identifying the necessary safety-related responses and deciding how those responses can be implemented in terms of system operation. The main basis for estimating the reliability of operator action is primarily determined by the available time for that particular event before core damage occurs.

The numerical models for diagnosing an abnormal event by the control room team and carrying out the appropriate activities has been based on work described in Reference 1 (Handbook of HRA). Figure C.1 shows the basic diagnosis model, the probability of operations team diagnosis error in case of an abnormal event. The median joint human error probability (HEP) shows the probability of a team not diagnosing an abnormal event by a given elapsed time. The other lines represent the lower and upper error factors. The probability vs time curve was developed on the basis of a clinical speculation presented in Reference 2 at an National Reliability Evaluation Program data workshop. A hypothetical response time probability curve has been constructed using the general approach suggested in Reference 3 assuming lognormality for time to diagnosis rather than that the probability of failure is a logarithmic function of time.

In case the event is generally not practiced by the operators except in the initial training, the handbook[1] recommends the use of the upper bound joint HEP curve.

In this study a combination of upper bound HEP_{UB} and median HEP_M has been used ($HEP_{UB} + HEP_M/2$) reflecting on the fact, that even though LOCA events are well practiced, ISL events are not specifically recognized in the written procedures especially not on the system level.

For post-diagnosis performance the handbook recommends using single HEP values, which are applicable to activities to be carried out by the control room team following diagnosis of the problem. It is certain that actions will always be taken by the operators in response to an abnormal event, but only after the condition has been diagnosed will the operators refer to the appropriate written procedures (if any) to cope with the event.

In case of an ISL the initial signals are somewhat misleading indicating either a typical inside or outside LOCA event. The determination of the particular location of the break due to the ISL is extremely important, since systems required to mitigate the LOCA event might be affected.

In general, system specific ISL procedures are not available to the operator, but the loss-of-coolant phase is covered by the LOCA procedures.

Once the nature of the event has been correctly diagnosed an HEP of .2 has been used for carrying out post-diagnosis activities. The recommended HEP value of .05 is based on availability of well written specific procedures. However, for ISL events system specific procedures generally do not exist and an increased HEP value is judged to be more appropriate.

References

1. A. D. Swain, H. E. Guttmann, "Handbook of Human Reliability Analysis With Emphasis on Nuclear Power Plant Applications, Final Report," NUREG/CR-1278, August 1983.

2. J. R. Fragola, A. J. Oswald et al., "Human Error Probability vs Time, Generic Data Base for Data and Models in NREP Guide," EGG-EA-5887, June 1982.

3. J. Wreathall, "Operator Action Trees, An Approach to Quantifying Operator Error Probability During Accident Sequences," NUS Report #4159, July 1982.

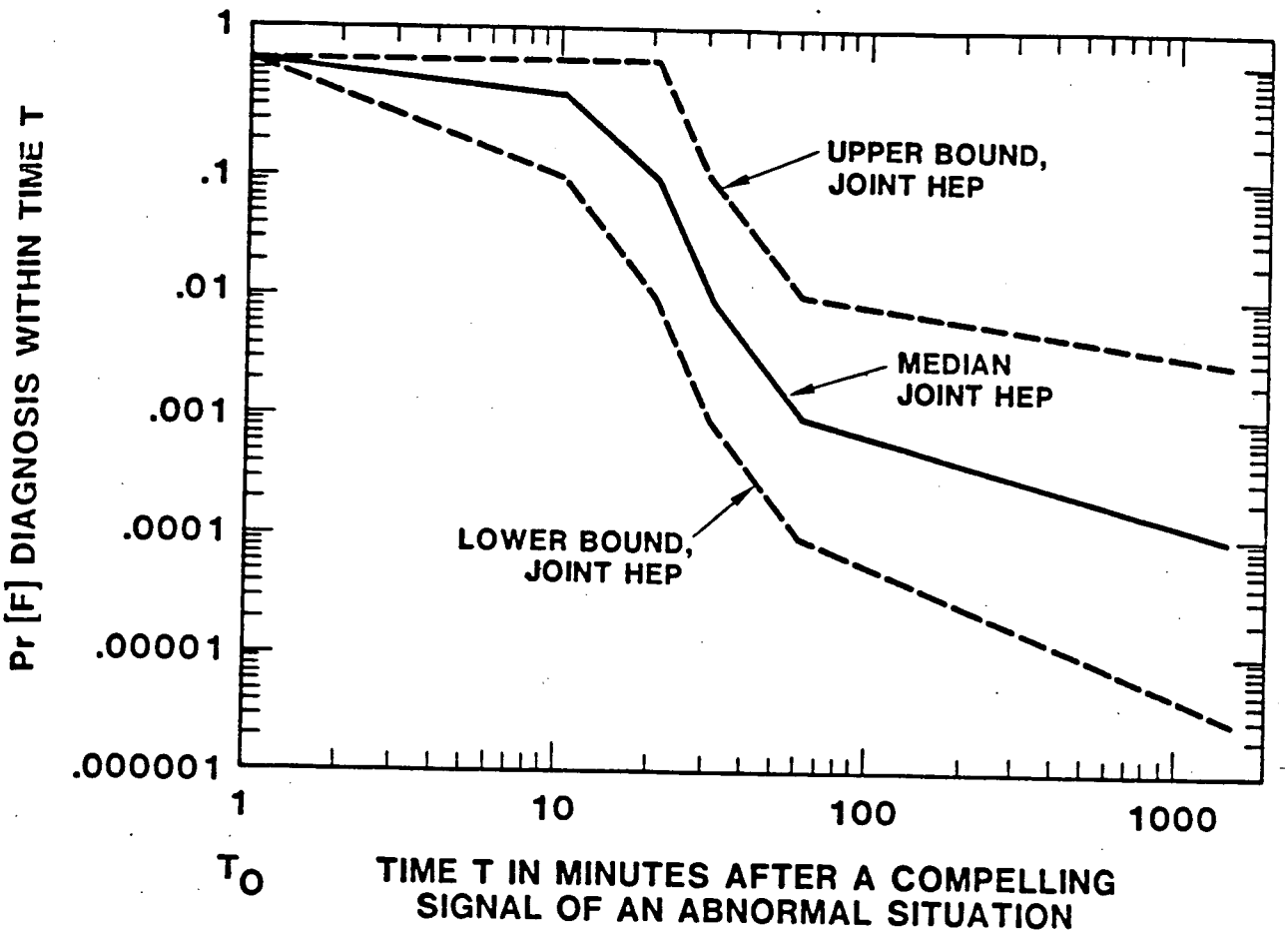

Figure C.1 Time curve for operator action.

APPENDIX D: Thermal-Hydraulic Aspects of Interfacing LOCAs

Interfacing LOCA bypassing the containment has been deterministically studied for typical cases[1] to assess the effect on core damage.

The LOCA sequence assumes the failure of the pressure boundary at isolating check valves and/or motor-operated gate valves. The low pressure system is overpressurized by the primary coolant and the system boundary fails outside the containment (pipe rupture or pump seal blowout, etc.). Depending on the mode of failure and its particular location, a large or small break LOCA can occur. In the following a brief summary of the deterministic calculations is given for these type of accident sequences.

D.1 Large and Medium LOCA (>2")

The transient is initiated by a large low pressure pipe break resulting in an extremely severe accident sequence.[1] Figures D.1 through D.3 describe the thermal-hydraulic history of this accident. Four parametric cases have been calculated. The base case indicates an accident sequence where no ECC injection is available. If the failure is such that pumped ECC injection is prevented, core damage is certain as indicated on Figure 2 even if accumulators are available. Core damage would occur at ~8 minutes after the break. The other parametric cases indicate that stable core cooling can be established with a minimum of one HPI pump available until the RWST inventory is depleted, which is in the order of 1-12 hours (Figure D.3). Long term cooling is a major concern since the water supply from the RWST is limited. In addition, recirculation system may be unavailable due to the postulated failure in the low pressure RHR system.

D.2 Small LOCA (<2")

The primary system in accident sequences with initial break size less than 2" in diameter will remain pressurized by one HPI pump (see Figure D.4). The reactor coolant system is refilled and subcooling is achieved. Core average temperature is determined by system-wide energy balance (Figure D.5) and in all cases the system would slowly cool until the RWST water supply is

exhausted, which may be extended by throttling the HPI flow. Conditions for low pressure recirculation cooling are not met before the RWST supply runs out (8-15 hours). Long term cooling may also be of some concern, because the postulated failure could affect the capability of the HP and/or LP recirculation system.

References

1. J. F. Dearing et al., "Dominant Accident Sequences in Oconee-1 PWR," NUREG/CR-4140, Los Alamos National Laboratory, April 1985.

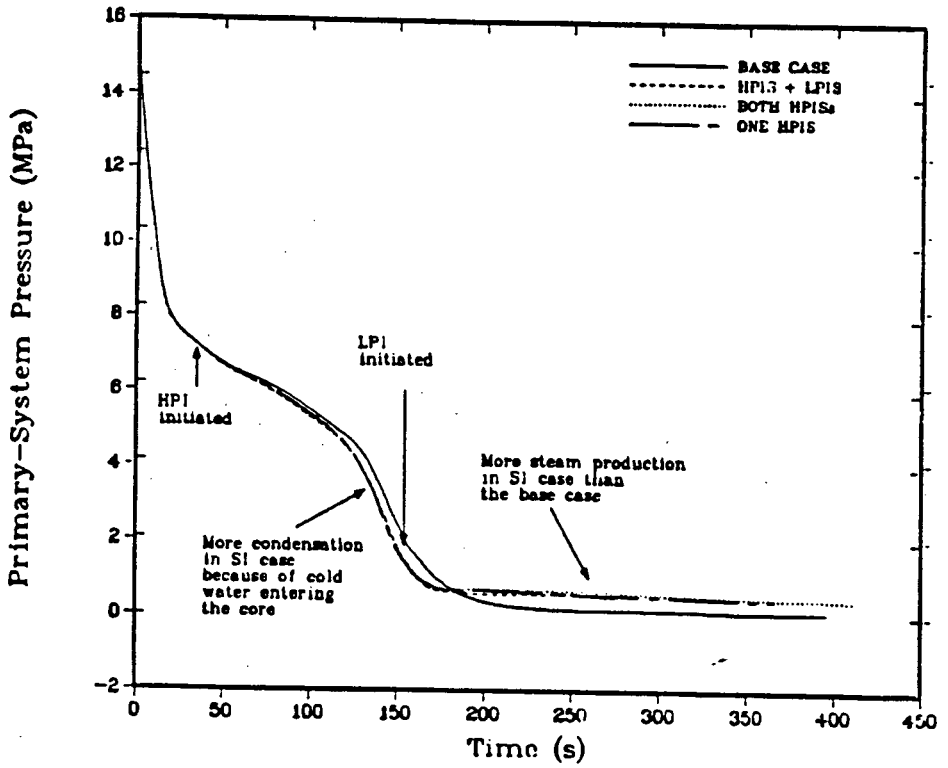

Figure D.1 Primary system pressure during V sequence base and parametric cases.

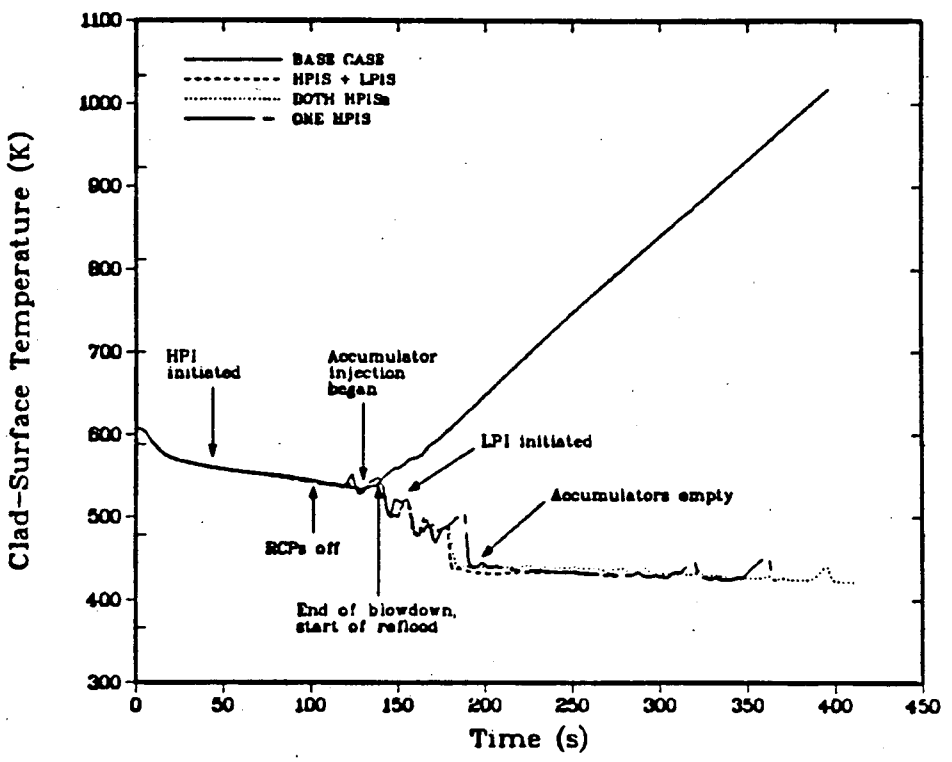

Figure D.2 Maximum cladding temperature of average rod during V sequence base and parametric cases.

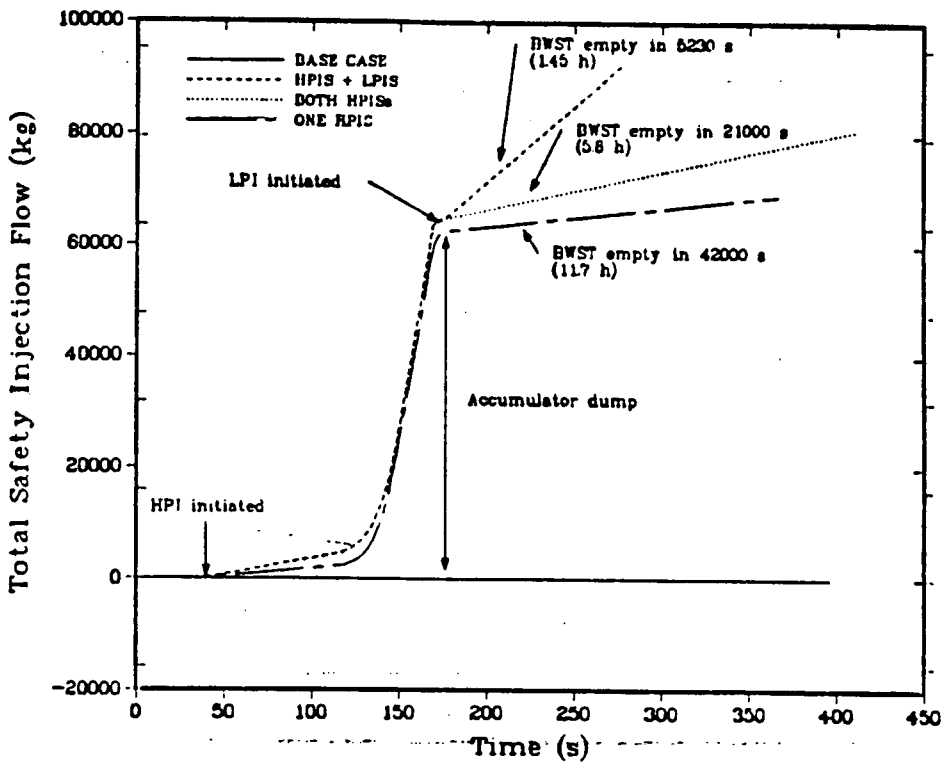

Figure D.3 Duration of effective core cooling during V sequence base and parametric cases.

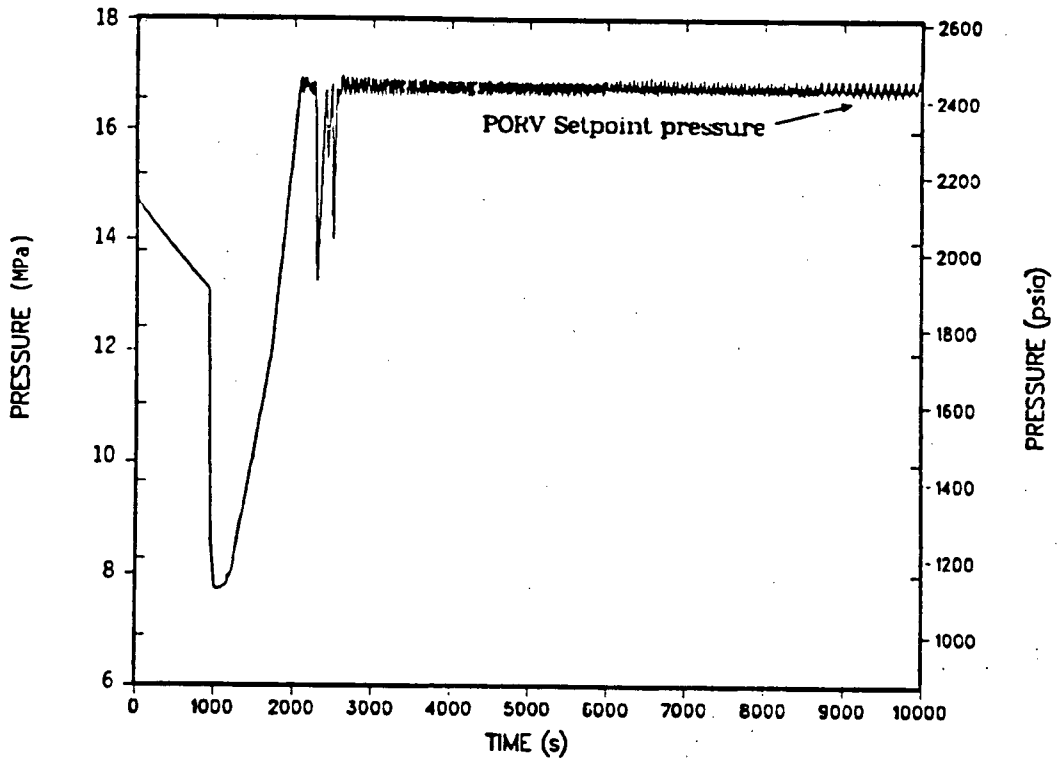

Figure D.4 Pressurizer pressure, 11-mm diam. (0.43") break case.

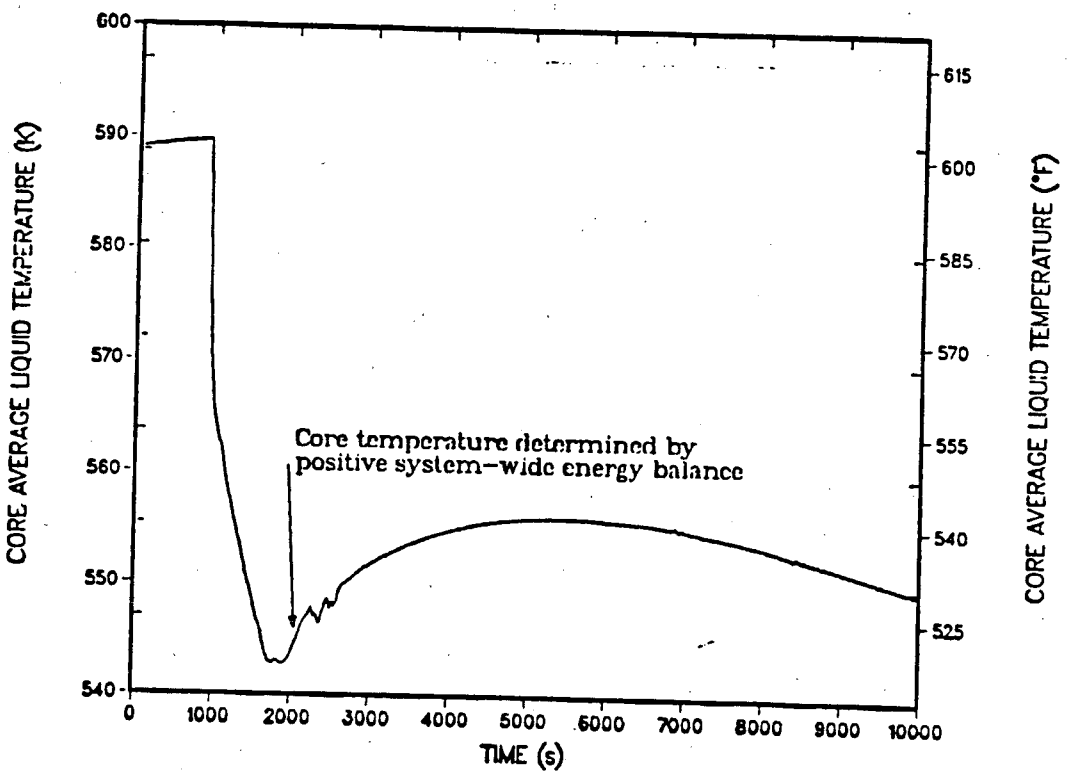

Figure D.5 Core average liquid temperature, 11-mm diam. (0.43") break case.

6. EFFECTS OF SOME CORRECTIVE ACTIONS ON CORE DAMAGE FREQUENCY

In order to reduce the core damage frequency due to ISLs, numerous options appear to be available. From these options, however, corrective actions with perspective of implementation are rather limited. In the present section, those corrective actions will be discussed which have been deemed to be implementable without excessive difficulties.

The corrective actions considered are essentially plant specific ones. The reason for this is that one or two plants already have certain safety features against ISLs, while others do not.

In the following calculations, the effects of the remedial actions on the initiator frequencies of LOCAs and overpressurization, as well as on the core damage frequencies are presented.

6.1 Corrective Actions at Indian Point 1

At Indian Point 3 leak tests are performed on the isolation valves (check valves as well as MOVs) after each cold shutdown. Thus, there is no reason to increase the frequency of leak tests. However, as the calculations below demonstrate, there is room for safety improvement by implementing the following corrective actions.

1. Application of pressure sensors (or equivalent continuous leak sensor devices) between the first (RCS side) and second isolation valves on each of the LPI/HPI/RHR pathways. (This is a feature, which can be found at the common LPI/HPI/Accumulator inlet at Calvert Cliffs 1.)

2. Improving the ability of operators for ISL recognition and accident management.

3. Application of a "pipe fuse" (or equivalent plant feature) in the RHR suction line after the two MOVs, as it is implemented at Oconee 3.

4. Establishing a procedure for RWST makeup in case of an ISL.

Table 6.1 presents the base case results to be compared with the results of each corrective action separately and combined.

6.1.1 Application of Permanent Pressure Sensor Between The First Two Isolation Valves on Each LPI/HPI/RHR Line

The advantage of the pressure sensor is that whenever the first isolation valve leaks an overpressurization alarm would call the attention of the operator to make preventive action in time. Its effect causes the time dependent terms to vanish in expressions describing initiator frequencies. Table 6.2 shows the pathway by pathway results if the permanent pressure sensors are implemented. (The results reflect the assumption that the pressure sensors will not fail.) The last column gives the core damage reduction values relative to the base case. The effect of the continuous leak testing is to reduce the total CDF associated with ISL bypassing the containment by a factor of ~2.

6.1.2 Improving The Ability of Operators For ISL Management

After the plant visit and having read the LOCA procedure of Indian Point 3, our impression was that it would be very useful to improve the ability of operators to manage an ISL accident. This would be easily achieved by training on control room simulators. However, Table 6.3 shows the effect of considering improved operator actions in the ISL event trees is negligible.

6.1.3 Application of a "Pipe Fuse" in The RHR Suction Pathway

The advantage of the implementation of this corrective feature is that it allows to convert a containment bypassing LOCA to a LOCA inside the containment. Its merit is related rather to risk reduction and not to overall reduction of core damage. It results in the decrease of about a factor of two of the core damage frequency value associated with the "ISL outside containment" case in Table 6.4.

6.1.4 Establishing RWST Makeup Procedure

One of the basic assumptions in this study is that small LOCA bypassing the containment (LOCA/outside) would eventually lead to core damage (CCDF=1). The operator has to rely on the water supply available in the RWST. The makeup to the RWST is generally based on "ad hoc" arrangements depending on the type of accidents and the available water supply. If this procedure can be formalized with respect to the various ISL scenarios, the CDF associated with small LOCA/outside would greatly be reduced (effectively reflecting only HP unavailability and typically CCDF~10^{-3}).

Table 6.5 lists the corresponding CDF values and it can clearly be seen that the total CDF/outside is reduced by more than a factor of ~10. Two important conclusions can be drawn: 1) small LOCAs dominate the total CDF/outside, and 2) the most effective corrective action is to insure long term water supply.

Table 6.6 provides the results if all of the above corrective actions would be implemented. A comparison with the base case shows significant advantage by implementing all of the above corrective actions.

6.2 Corrective Actions at Oconee 3

At Oconee 3 the leak tests of the isolation check valves and MOVs are performed at halfway between refueling (nine month intervals). After cold shutdown (there are two during the leak test period) the isolation valves may remain in failed states (open). Therefore, for this plant the simplest remedial action is to increase the frequency of the leak test. In addition, there are other options. The list of recommendations are:

1. Leak test of the isolation valves (check and MOVs) after each cold shutdown.

2. Application of permanent pressure sensors between the first and the second isolation valves on each LPI/RHR pathways.

3. Improving the ability of operators for ISL recognition and accident management.

4. Rerouting the drain lines of certain relief valves back to the containment.

5. Establishing RWST makeup procedure.

Table 6.7 provides the results to be compared with the results of each corrective action separately and combined.

6.2.1 Leak Test of The Isolation Valves After Each Cold Shutdown

With the implementation of leak tests after each cold shutdown, the possibility of leaving isolation valves open can be eliminated. In addition, the MOV in the LPI lines should be open during RCS pressurization. After reaching system pressure and before rods are withdrawn the MOV should be closed.

At the RHR suction MOVs, after leak tests the fuse disconnect should be kept open to isolate the 480 ac power during plant operation. This is implemented at Indian Point 3 against any spuriously generated shorts in the control cables of the MOV breaker.

Table 6.8 lists the results of the calculation. The results are obtained by omitting the "quarterly correction terms" introduced into the expressions describing the LPI/RHR initiators at Oconee 3.

6.2.2 Application of Permanent Pressure Sensors Between The First and Second Isolation Valves on Each LPI/RHR Pathways

The application of pressure sensors (or other equivalent leak sensor devices) have the same effect as it was explained at Indian Point 3. Table 6.9 shows the results for each pathway.

6.2.3 Improving The Ability of Operators For ISL Recognition and Accident Management

Table 6.10 presents the results of this corrective action.

6.2.4 Rerouting The Drain Lines of Certain Relief Valves Back to The Containment

The drain lines of the LPI and letdown relief valves relieve into tanks located outside containment. The consequences of this fact is that small LOCAs though these relief valves are essentially containment bypassing ISLs. By rerouting the drain lines from these relief valves back to the containment (e.g., to the Pressurizer Relief Tank) containment bypassing LOCAs would be converted to LOCAs inside containment. Thus, health risk would be reduced. Table 6.11 contains the results of this correction action.

6.2.5 RWST Makeup Procedure

Establishing RWST makeup procedures have significant effect in reducing total CDF/outside as it was explained at Indian Point 3. Table 6.12 lists the results of this corrective action.

The combined effect of corrective action 2, 3, 4, and 5 is shown in Table 6.13.

6.3 Corrective Actions at Calvert Cliffs 1

At Calvert Cliffs there is a permanent pressure sensor at the common LPI/HPI/Accumulator inlet. There is also a relief valve between the MOVs on the RHR suction line. However, its set point is set to high.

Thus, for Calvert Cliffs the list of corrective action is as follows:

1. Application of permanent pressure sensors also between the last check valves and the closed MOV on the LPI/HPI lines and also between the two MOVs in the RHR suction line.

2. Improving the ability of operators for ISL recognition and accident management.

3. Rerouting the drain lines of LPI/HPI/RHR/Letdown relief valves back to the containment.

4. RWST makeup procedure.

Table 6.14 summarizes the results to be compared with the results of each corrective action separately and combined.

6.3.1 Application of Additional Permanent Pressure Sensors

In the base case calculations for the LPI/HPI lines full credit was not given to the effect of the pressure sensor at the shared inlet, because the other check valves and the MOVs on these lines are not surveilled continuously. Also, no credit was given to the effect of the relief valve between the two MOVs on the RHR suction line.

Table 6.15 contains the relevant data if the additional permanent pressure sensors would be implemented along with open fuse disconnects of 480 ac power bus to the RHR suction MOVs.

6.3.2 Improvement of The Ability of Operators For ISL Recognition and Accident Management

Table 6.16 shows the results of this corrective action.

6.3.3 Rerouting The Drain Lines of LPI/HPI/RHR/Letdown Relief Valves Back to The Containment

The advantage of rerouting the drain lines of these relief valves back to the containment has mainly health risk reducing significance. Table 6.17 presents the relevant data.

6.3.4 RWST Makeup Procedure

Table 6.18 presents the results of calculations including the effects of formalized RWST makeup procedure.

The combined effect of corrective actions 1, 2, 3, and 4 is shown in Table 6.19.

Table 6.1
Core Damage Frequency - Indian Point
Base Case

System	Initiator	P(Rupture)	CDF/Year Base
A - Overpressurization			
LPI	1.71-06	1.00-01	3.26-07
		1.00-03	1.74-07
		3.00-05	1.73-07
SI	6.98-05	1.00-01	6.36-06
		1.00-03	6.36-08
		3.00-05	1.91-09
RHR Suction	9.80-07	1.00-01	4.93-07
		1.00-03	4.93-07
		3.00-05	4.93-07
Letdown	6.82-07	1.00	1.50-10
Accumulators	4.64-03	1.00-01	3.18-06
		1.00-03	8.89-07
		3.00-05	8.66-07
B - Without Overpressurization			
LPI	9.88-06		5.63-08
SI	5.52-04		3.15-06
RHR	1.70-05		9.69-08
Letdown	2.28-03		1.30-05
Total CDF			
A - Overpressurization		1.00-01	1.04-05
		1.00-03	1.62-06
		3.00-05	1.53-06
B - Without Overpressurization			1.63-05
A and B		1.00-01	2.67-05
		1.00-03	1.79-05
		3.00-05	1.78-05
Total CDF With ISL Outside		1.00-01	7.17-07
		1.00-03	6.63-07
		3.00-05	6.61-07

Table 6.2
Core Damage Frequency - Indian Point
Continuous Leak/Pressure Monitoring

System	Initiator	P(Rupture)	CDF/Year Perturbed	CDF/Year Base	CDF Pert / CDF Base
A - Overpressurization					
LPI	9.90-07	1.00-01	1.89-07	3.26-07	.58
		1.00-03	1.01-07	1.74-07	.58
		3.00-05	1.00-07	1.73-07	.58
SI	2.04-06	1.00-01	1.86-07	6.36-06	.03
		1.00-03	1.86-09	6.36-08	.03
		3.00-05	5.57-11	1.91-09	.03
RHR Suction	4.85-07	1.00-01	2.44-07	4.93-07	.50
		1.00-03	2.44-07	4.93-07	.50
		3.00-05	2.44-07	4.93-07	.50
Letdown	No change	1.00		1.50-10	1.00
Accumulators	No change	1.00-01		3.18-06	1.00
		1.00-03		8.89-07	1.00
		3.00-05		8.66-07	1.00
B - Without Overpressurization					
LPI	1.50-06		8.55-09	5.63-08	.15
SI	6.81-06		3.88-08	3.15-06	.01
RHR	1.49-06		8.49-09	9.69-08	.09
Letdown	No change			1.30-05	1.00
Total CDF					
A - Overpressurization		1.00-01	3.80-06	1.04-05	.37
		1.00-03	1.24-06	1.62-06	.76
		3.00-05	1.21-06	1.53-06	.79
B - Without Overpressurization			1.31-05	1.63-05	.80
A and B		1.00-01	1.69-05	2.67-05	.63
		1.00-03	1.43-05	1.79-05	.80
		3.00-05	1.43-05	1.78-05	.80
Total CDF With ISL Outside		1.00-01	3.34-07	7.17-07	.47
		1.00-03	3.41-07	6.63-07	.52
		3.00-05	3.41-07	6.61-07	.52

Table 6.3
Core Damage Frequency - Indian Point
Operator Training

System	Initiator	P(Rupture)	CDF/Year Perturbed	CDF/Year Base	CDF Pert / CDF Base
A - Overpressurization					
LPI	No change	1.00-01	3.25-07	3.26-07	.99
		1.00-03	1.73-07	1.74-07	.99
		3.00-05	1.71-07	1.73-07	.99
SI	No change	1.00-01	6.29-06	6.36-06	.99
		1.00-03	6.29-08	6.36-08	.99
		3.00-05	1.89-09	1.91-09	.99
RHR Suction	No change	1.00-01	No change	4.93-07	1.00
		1.00-03	No change	4.93-07	1.00
		3.00-05	No change	4.93-07	1.00
Letdown	No change	1.00	1.19-10	1.50-10	.79
Accumulators	No change	1.00-01	2.54-06	3.18-06	.79
		1.00-03	8.14-07	8.89-07	.92
		3.00-05	7.97-07	8.66-07	.92
B - Without Overpressurization					
LPI	No change		No change	5.63-08	1.0
SI	No change		No change	3.15-06	1.0
RHR	No change		No change	9.69-08	1.0
Letdown	No change		No change	1.30-05	1.0
Total CDF					
A - Overpressurization		1.00-01	9.65-06	1.04-05	.93
		1.00-03	1.54-06	1.62-06	.95
		3.00-05	1.46-06	1.53-06	.95
B - Without Overpressurization			1.63-05	1.63-05	1.00
A and B		1.00-01	2.59-05	2.67-05	.97
		1.00-03	1.78-05	1.79-05	.99
		3.00-05	1.78-05	1.78-05	.99
Total CDF With ISL Outside		1.00-01	6.55-07	7.17-07	.91
		1.00-03	6.61-07	6.63-07	.99
		3.00-05	6.61-07	6.61-07	.99

Table 6.4
Core Damage Frequency - Indian Point
RHR Suction, Inside Break Enhanced

System	Initiator	P(Rupture)	CDF/Year Perturbed	CDF/Year Base	CDF Pert / CDF Base
A - Overpressurization					
LPI	No change	1.00-01		3.26-07	1.00
		1.00-03		1.74-07	1.00
		3.00-05		1.73-07	1.00
SI	No change	1.00-01		6.36-06	1.00
		1.00-03		6.36-08	1.00
		3.00-05		1.91-09	1.00
RHR Suction	No change	1.00-01	1.03-07	4.93-07	.21
		1.00-03	1.03-07	4.93-07	.21
		3.00-05	1.03-07	4.93-07	.21
Letdown	No change	1.00		1.50-10	1.0
Accumulators	No change	1.00-01		3.18-06	1.00
		1.00-03		8.89-07	1.00
		3.00-05		8.66-07	1.00
B - Without Overpressurization					
LPI	No change			5.63-08	1.00
SI	No change			3.15-06	1.00
RHR	No change			9.69-08	1.00
Letdown	No change			1.30-05	1.00
Total CDF					
A - Overpressurization		1.00-01	9.97-06	1.04-05	.96
		1.00-03	1.23-06	1.62-06	.76
		3.00-05	1.14-06	1.53-06	.75
B - Without Overpressurization			1.63-05	1.63-05	1.00
A and B		1.00-01	2.63-05	2.67-05	.99
		1.00-03	1.75-05	1.79-05	.98
		3.00-05	1.74-05	1.78-05	.98
Total CDF With ISL Outside		1.00-01	3.25-07	7.17-07	.45
		1.00-03	2.70-07	6.63-07	.41
		3.00-05	2.69-07	6.61-07	.41

Table 6.5
Core Damage Frequency - Indian Point
RWST Makeup Procedure

System	Initiator	P(Rupture)	CDF/Year Perturbed	CDF/Year Base	CDF Pert / CDF Base
A - Overpressurization					
LPI	No change	1.00-01	1.73-07	3.26-07	.53
		1.00-03	4.33-09	1.74-07	.02
		3.00-05	2.67-09	1.73-07	.01
SI	No change	1.00-01	6.29-06	6.36-06	.99
		1.00-03	6.29-08	6.36-08	.99
		3.00-05	1.89-09	1.91-09	.99
RHR Suction	No change	1.00-01	5.44-08	4.93-07	.11
		1.00-03	6.07-09	4.93-07	.01
		3.00-05	5.60-09	4.93-07	.01
Letdown	No change	1.00	1.16-10	1.50-10	.77
Accumulators	No change	1.00-01		3.18-06	1.0
		1.00-03		8.89-07	1.0
		3.00-05		8.66-07	1.0
B - Without Overpressurization					
LPI	No change			5.63-08	1.0
SI	No change			3.15-06	1.0
RHR	No change			9.69-08	1.0
Letdown	No change			1.30-05	1.0
Total CDF					
A - Overpressurization		1.00-01	9.70-06	1.04-05	.94
		1.00-03	9.62-07	1.62-06	.60
		3.00-05	8.77-07	1.53-06	.57
B - Without Overpressurization			1.63-05	1.63-05	1.0
A and B		1.00-01	2.60-05	2.67-05	.98
		1.00-03	1.73-05	1.79-05	.96
		3.00-05	1.72-05	1.78-05	.96
Total CDF With ISL Outside		1.00-01	5.65-08	7.17-07	.08
		1.00-03	4.29-09	6.63-07	.01
		3.00-05	3.78-09	6.61-07	.01

Table 6.6
Core Damage Frequency - Indian Point
Combination of Corrective Actions

System	Initiator	P(Rupture)	CDF/Year Perturbed	CDF/Year Base	CDF Pert / CDF Base
A - Overpressurization					
LPI		1.00-01	9.97-08	3.26-07	.31
		1.00-03	1.79-09	1.74-07	.01
		3.00-05	8.26-10	1.73-07	.005
SI		1.00-01	1.84-07	6.36-06	.03
		1.00-03	1.84-09	6.36-08	.03
		3.00-05	5.51-11	1.91-09	.03
RHR Suction		1.00-01	7.70-09	4.93-07	.02
		1.00-03	2.81-09	4.93-07	.01
		3.00-05	2.77-09	4.93-07	.01
Letdown		1.00	1.16-10	1.50-10	.77
Accumulators		1.00-01	2.54-06	3.18-06	.79
		1.00-03	8.14-07	8.89-07	.92
		3.00-05	7.97-07	8.66-07	.92
B - Without Overpressurization					
LPI			8.55-09	5.63-08	.15
SI			3.88-08	3.15-06	.01
RHR			8.49-09	9.69-08	.01
Letdown			1.30-05	1.30-05	1.0
Total CDF					
A - Overpressurization		1.00-01	2.83-06	1.04-05	.27
		1.00-03	8.20-07	1.62-06	.51
		3.00-05	8.01-07	1.53-06	.52
B - Without Overpressurization			1.31-05	1.63-05	.80
A and B		1.00-01	1.59-05	2.67-05	.60
		1.00-03	1.39-05	1.79-05	.77
		3.00-05	1.39-05	1.78-05	.77
Total CDF With ISL Outside		1.00-01	5.78-09	7.17-07	.01
		1.00-03	8.90-10	6.63-07	.001
		3.00-05	8.42-10	6.61-07	.001

Table 6.7
Core Damage Frequency - Oconee
Base Case

System	Initiator	P(Rupture)	CDF/Year Base
A - Overpressurization			
LPI	7.68-08	1.00-01	7.68-08
		1.00-03	7.68-08
		3.00-05	7.68-08
RHR Suction	1.44-06	1.00-01	1.48-07
		1.00-03	1.47-07
		3.00-05	1.47-07
Letdown	2.28-03	1.0	5.93-07
Accumulators	4.10-03	1.00-01	4.83-06
		1.00-03	7.21-07
		3.00-05	6.81-07
B - Without Overpressurization			
LPI	6.22-07		6.22-07
RHR	5.04-05		1.06-07
Total CDF			
A - Overpressurization		1.00-01	5.65-06
		1.00-03	1.54-06
		3.00-05	1.50-06
B - Without Overpressurization			7.31-07
A and B		1.00-01	6.38-06
		1.00-03	2.27-06
		3.00-05	2.23-06
Total CDF With ISL Outside		1.00-01	1.44-06
		1.00-03	1.44-06
		3.00-05	1.44-06

Table 6.8
Core Damage Frequency - Oconee
Leak Test After Each Cold Shutdown

System	Initiator	P(Rupture)	CDF/Year Perturbed	CDF/Year Base	CDF Pert / CDF Base
A - Overpressurization					
LPI	9.68-09	1.00-01	9.68-09	7.68-08	.12
		1.00-03	9.68-09	7.68-08	.12
		3.00-05	9.68-09	7.68-08	.12
RHR Suction	1.02-06	1.00-01	1.05-07	1.48-07	.71
		1.00-03	1.04-07	1.47-07	.71
		3.00-05	1.04-07	1.47-07	.71
Letdown	No change	1.0		5.93-07	1.00
Accumulators	2.75-03	1.00-01	3.24-06	4.83-06	.67
		1.00-03	4.84-07	7.21-07	.67
		3.00-05	4.57-07	6.81-07	.67
B - Without Overpressurization					
I[illegible]	8.07-08		8.07-08	6.22-07	.13
	1.85-05		3.88-08	1.06-07	.37
Total CDF					
A - Overpressurization		1.00-01	3.95-06	5.65-06	.70
		1.00-03	1.19-06	1.54-06	.77
		3.00-05	1.16-06	1.50-06	.78
B - Without Overpressurization			1.20-07	7.31-07	.16
A and B		1.00-01	4.07-06	6.38-06	.64
		1.00-03	1.31-06	2.27-06	.58
		3.00-05	1.28-06	2.23-06	.58
Total CDF With ISL Outside		1.00-01	7.85-07	1.44-06	.55
		1.00-03	7.85-07	1.44-06	.55
		3.00-05	7.85-07	1.44-06	.55

Table 6.9
Core Damage Frequency - Oconee
Continuous Leak/Pressure Testing

System	Initiator	P(Rupture)	CDF/Year Perturbed	CDF/Year Base	CDF Pert / CDF Base
A - Overpressurization					
LPI	6.57-10	1.00-01	6.57-10	7.68-08	.01
		1.00-03	6.57-10	7.68-08	.01
		3.00-05	6.57-10	7.68-08	.01
RHR Suction	5.80-07	1.00-01	5.95-08	1.48-07	.40
		1.00-03	5.91-08	1.47-07	.40
		3.00-05	5.91-08	1.47-07	.40
Letdown	No change	1.0		5.93-07	1.00
Accumulators	No change	1.00-01		4.83-06	1.00
		1.00-03		7.21-07	1.00
		3.00-05		6.81-07	1.00
B - Without Overpressurization					
[illegible]	2.90-09		2.90-09	6.22-07	.004
	1.77-06		3.72-09	1.06-07	.03
Total CDF					
A - Overpressurization		1.00-01	5.49-06	5.65-06	.97
		1.00-03	1.37-06	1.54-06	.89
		3.00-05	1.33-06	1.50-06	.89
B - Without Overpressurization			6.62-09	7.31-07	.01
A and B		1.00-01	5.49-06	6.38-06	.86
		1.00-03	1.38-06	2.27-06	.61
		3.00-05	1.34-06	2.23-06	.60
Total CDF With ISL Outside		1.00-01	6.54-07	1.44-06	.46
		1.00-03	6.54-07	1.44-06	.46
		3.00-05	6.54-07	1.44-06	.46

Table 6.10
Core Damage Frequency - Oconee
Operator Training

System	Initiator	P(Rupture)	CDF/Year Perturbed	CDF/Year Base	CDF Pert / CDF Base
A - Overpressurization					
LPI	No change	1.00-01	7.68-08	7.68-08	1.00
		1.00-03	7.68-08	7.68-08	1.00
		3.00-05	7.68-08	7.68-08	1.00
RHR Suction	No change	1.00-01	1.48-07	1.48-07	1.00
		1.00-03	1.47-07	1.47-07	1.00
		3.00-05	1.47-07	1.47-07	1.00
Letdown	No change	1.0	3.88-07	5.93-07	.65
Accumulators	No change	1.00-01	4.82-06	4.83-06	.99
		1.00-03	7.00-07	7.21-07	.97
		3.00-05	6.60-07	6.81-07	.97
B - Without Overpressurization					
	No change		6.25-07	6.22-07	1.0
	No change		1.06-07	1.06-07	1.0
Total CDF					
A - Overpressurization		1.00-01	5.43-06	5.65-06	.96
		1.00-03	1.31-06	1.54-06	.85
		3.00-05	1.27-06	1.50-06	.85
B - Without Overpressurization			7.31-07	7.31-07	1.0
A and B		1.00-01	6.16-06	6.38-06	.97
		1.00-03	2.04-06	2.27-06	.90
		3.00-05	2.00-06	2.23-06	.89
Total CDF With ISL Outside		1.00-01	1.23-06	1.44-06	.86
		1.00-03	1.23-06	1.44-06	.86
		3.00-05	1.23-06	1.44-06	.86

Table 6.11
Core Damage Frequency - Oconee
Rerouting Relief Valve Drain Lines

System	Initiator	P(Rupture)	CDF/Year Perturbed	CDF/Year Base	CDF Pert / CDF Base
A - Overpressurization					
LPI	No change	1.00-01		7.68-08	1.00
		1.00-03		7.68-08	1.00
		3.00-05		7.68-08	1.00
RHR Suction	No change	1.00-01		1.48-07	1.00
		1.00-03		1.47-07	1.00
		3.00-05		1.47-07	1.00
Letdown	No change	1.0	3.65-07	5.93-07	.62
Accumulators	No change	1.00-01		4.83-06	1.00
		1.00-03		7.21-07	1.00
		3.00-05		6.81-07	1.00
B - Without Overpressurization					
[illegible]	No change		1.31-09	6.22-07	.002
[illegible]	No change		1.06-07	1.06-07	1.00
Total CDF					
A - Overpressurization		1.00-01	5.42-06	5.65-06	.96
		1.00-03	1.31-06	1.54-06	.85
		3.00-05	1.27-06	1.50-06	.85
B - Without Overpressurization			1.07-07	7.31-07	.15
A and B		1.00-01	5.53-06	6.38-06	.87
		1.00-03	1.42-06	2.27-06	.63
		3.00-05	1.38-06	2.23-06	.62
Total CDF With ISL Outside		1.00-01	5.87-07	1.44-06	.41
		1.00-03	5.87-07	1.44-06	.41
		3.00-05	5.87-07	1.44-06	.41

Table 6.12
Core Damage Frequency - Oconee
RWST Makeup Procedure

System	Initiator	P(Rupture)	CDF/Year Perturbed	CDF/Year Base	CDF Pert / CDF Base
A - Overpressurization					
LPI	No change	1.00-01	7.83-09	7.68-08	.10
		1.00-03	2.38-10	7.68-08	.003
		3.00-05	1.64-10	7.68-08	.002
RHR Suction	No change	1.00-01	1.85-08	1.48-07	.13
		1.00-03	3.18-09	1.47-07	.02
		3.00-05	3.03-09	1.47-07	.02
Letdown	No change	1.0	3.65-07	5.93-07	.62
Accumulators	No change	1.00-01		4.83-06	1.00
		1.00-03		7.21-07	1.00
		3.00-05		6.81-07	1.00
B - Without Overpressurization					
	No change		1.31-09	6.22-07	.002
	No change		1.06-07	1.06-07	1.00
Total CDF					
A - Overpressurization		1.00-01	5.23-06	5.65-06	.93
		1.00-03	1.09-06	1.54-06	.71
		3.00-05	1.05-06	1.50-06	.70
B - Without Overpressurization			1.07-07	7.31-07	.15
A and B		1.00-01	5.33-06	6.38-06	.84
		1.00-03	1.20-06	2.27-06	.53
		3.00-05	1.16-06	2.23-06	.52
Total CDF With ISL Outside		1.00-01	3.89-07	1.44-06	.27
		1.00-03	3.67-07	1.44-06	.26
		3.00-05	3.67-07	1.44-06	.26

Table 6.13
Core Damage Frequency - Oconee
Combination of Corrective Actions

System	Initiator	P(Rupture)	CDF/Year Perturbed	CDF/Year Base	CDF Pert / CDF Base
A - Overpressurization					
LPI		1.00-01	6.69-11	7.68-08	.001
		1.00-03	2.04-12	7.68-08	.00002
		3.00-05	1.40-12	7.68-08	.00001
RHR Suction		1.00-01	7.43-09	1.48-07	.05
		1.00-03	1.28-09	1.47-07	.01
		3.00-05	1.22-09	1.47-07	.01
Letdown		1.0	3.65-07	5.93-07	.62
Accumulators		1.00-01	4.82-06	4.83-06	.99
		1.00-03	7.00-07	7.21-07	.97
		3.00-05	6.60-07	6.81-07	.97
B - Without Overpressurization					
[illegible]			6.09-12	6.22-07	0.0
[illegible]			3.72-09	1.06-07	.04
Total CDF					
A - Overpressurization		1.00-01	5.19-06	5.65-06	.92
		1.00-03	1.07-06	1.54-06	.70
		3.00-05	1.03-06	1.50-06	.68
B - Without Overpressurization			3.72-09	7.31-07	.01
A and B		1.00-01	5.19-06	6.38-06	.81
		1.00-03	1.07-06	2.27-06	.47
		3.00-05	1.03-06	2.23-06	.46
Total CDF With ISL Outside		1.00-01	3.71-07	1.44-06	.26
		1.00-03	3.65-07	1.44-06	.25
		3.00-05	3.65-07	1.44-06	.25

Table 6.14
Core Damage Frequency - Calvert Cliffs
Base Case

System	Initiator	P(Rupture)	CDF/Year Base
A - Overpressurization			
LPI	1.07-09	1.00-01	1.07-09
		1.00-03	1.07-09
		3.00-05	1.07-09
SI	6.21-10	1.00-01	6.21-11
		1.00-03	6.21-13
		3.00-05	1.86-14
RHR Suction	1.48-06	1.00-01	1.48-06
		1.00-03	1.48-06
		3.00-05	1.48-06
Letdown	2.28-03	1.0	3.99-07
Accumulators	5.98-03	1.00-01	1.11-05
		1.00-03	5.77-07
		3.00-05	4.74-07
B - Without Overpressurization			
LPI	3.94-09		3.94-09
SI	3.93-09		3.93-09
RHR	1.75-05		1.75-05
Total CDF			
A - Overpressurization		1.00-01	1.30-05
		1.00-03	2.46-06
		3.00-05	2.35-06
B - Without Overpressurization			1.75-05
A and B		1.00-01	3.05-05
		1.00-03	2.00-05
		3.00-05	1.99-05
Total CDF With ISL Outside		1.00-01	1.92-05
		1.00-03	1.92-05
		3.00-05	1.92-05

Table 6.15
Core Damage Frequency - Calvert Cliffs
Continuous Leak/Pressure Monitoring

System	Initiator	P(Rupture)	CDF/Year Perturbed	CDF/Year Base	CDF Pert / CDF Base
A - Overpressurization					
LPI	2.68-11	1.00-01	2.68-11	1.07-09	.03
		1.00-03	2.68-11	1.07-09	.03
		3.00-05	2.68-11	1.07-09	.03
SI	5.96-12	1.00-01	5.96-13	6.21-11	.01
		1.00-03	5.96-15	6.21-13	.01
		3.00-05	1.79-16	1.86-14	.01
RHR Suction	5.93-07	1.00-01	5.93-07	1.48-06	.40
		1.00-03	5.93-07	1.48-06	.40
		3.00-05	5.93-07	1.48-06	.40
Letdown	No change	1.0		3.99-07	1.0
Accumulators	No change	1.00-01		1.11-05	1.0
		1.00-03		5.77-07	1.0
		3.00-05		4.74-07	1.0
B - Without Overpressurization					
LPI			3.22-11	3.94-09	.01
SI			1.75-11	3.93-09	.005
RHR			1.81-06	1.75-05	.1
Total CDF					
A - Overpressurization		1.00-01	1.21-05	1.30-05	.93
		1.00-03	1.57-06	2.46-06	.64
		3.00-05	1.47-06	2.35-06	.62
B - Without Overpressurization			1.81-06	1.75-05	.1
A and B		1.00-01	1.39-06	3.05-05	.46
		1.00-03	3.38-06	2.00-05	.17
		3.00-05	3.28-06	1.99-05	.17
Total CDF With ISL Outside		1.00-01	2.63-06	1.92-05	.14
		1.00-03	2.63-06	1.92-05	.14
		3.00-05	2.63-06	1.92-05	.14

Table 6.16
Core Damage Frequency - Calvert Cliffs
Operator Training

System	Initiator	P(Rupture)	CDF/Year Perturbed	CDF/Year Base	CDF Pert / CDF Base
A - Overpressurization					
LPI	No change	1.00-01	1.07-09	1.07-09	1.0
		1.00-03	1.07-09	1.07-09	1.0
		3.00-05	1.07-09	1.07-09	1.0
SI	No change	1.00-01	6.21-11	6.21-11	1.0
		1.00-03	6.21-13	6.21-13	1.0
		3.00-05	1.86-14	1.86-14	1.0
RHR Suction	No change	1.00-01	1.48-06	1.48-06	1.0
		1.00-03	1.48-06	1.48-06	1.0
		3.00-05	1.48-06	1.48-06	1.0
Letdown	No change	1.0	1.94-07	3.99-07	.48
Accumulators	No change	1.00-01	8.73-06	1.11-05	.79
		1.00-03	5.33-07	5.77-07	.93
		3.00-05	4.53-07	4.74-07	.96
- Without Overpressurization					
LPI	No change		3.94-09	3.94-09	1.0
SI	No change		3.93-09	3.93-09	1.0
RHR	No change		1.75-05	1.75-05	1.0
Total CDF					
A - Overpressurization		1.00-01	1.04-05	1.30-05	.80
		1.00-03	2.21-06	2.46-06	.90
		3.00-05	2.13-06	2.35-06	.90
B - Without Overpressurization			1.75-05	1.75-05	1.0
A and B		1.00-01	2.79-05	3.05-05	.92
		1.00-03	1.97-05	2.00-05	.99
		3.00-05	1.96-05	1.99-05	.99
Total CDF With ISL Outside		1.00-01	1.90-05	1.92-05	.99
		1.00-03	1.90-05	1.92-05	.99
		3.00-05	1.90-05	1.92-05	.99

Table 6.17
Core Damage Frequency - Calvert Cliffs
Rerouting Relief Valve Drain Lines

System	Initiator	P(Rupture)	CDF/Year Perturbed	CDF/Year Base	CDF Pert / CDF Base
A - Overpressurization					
LPI	No change	1.00-01		1.07-09	1.00
		1.00-03		1.07-09	1.00
		3.00-05		1.07-09	1.00
SI	No change	1.00-01		6.21-11	1.00
		1.00-03		6.21-13	1.00
		3.00-05		1.86-14	1.00
RHR Suction	No change	1.00-01		1.48-06	1.00
		1.00-03		1.48-06	1.00
		3.00-05		1.48-06	1.00
Letdown	No change	1.0	1.71-07	3.99-07	.43
Accumulators	No change	1.00-01		1.11-05	1.00
		1.00-03		5.77-07	1.00
		3.00-05		4.74-07	1.00
B - Without Overpressurization					
LPI	No change		5.12-12	3.94-09	.001
SI	No change		5.11-12	3.93-09	.001
RHR	No change		2.27-08	1.75-05	.001
Total CDF					
A - Overpressurization		1.00-01	1.27-05	1.30-05	.98
		1.00-03	2.23-06	2.46-06	.90
		3.00-05	2.13-06	2.35-06	.90
B - Without Overpressurization			2.28-08	1.75-05	.001
A and B		1.00-01	1.28-05	3.05-05	.42
		1.00-03	2.25-06	2.00-05	.11
		3.00-05	2.15-06	1.99-05	.11
Total CDF With ISL Outside		1.00-01	1.50-06	1.92-05	.01
		1.00-03	1.50-06	1.92-05	.01
		3.00-05	1.50-06	1.92-05	.01

Table 6.18
Core Damage Frequency - Calvert Cliffs
RWST Makeup Procedure

System	Initiator	P(Rupture)	CDF/Year Perturbed	CDF/Year Base	CDF Pert / CDF Base
A - Overpressurization					
LPI	No change	1.00-01	1.08-10	1.07-09	.10
		1.00-03	2.46-12	1.07-09	.002
		3.00-05	1.42-12	1.07-09	.001
SI	No change	1.00-01	8.07-14	6.21-11	.001
		1.00-03	8.07-16	6.21-13	.001
		3.00-05	2.42-17	1.86-14	.001
RHR Suction	No change	1.00-01	1.50-07	1.48-06	.10
		1.00-03	3.49-09	1.48-06	.002
		3.00-05	1.97-09	1.48-06	.001
Letdown	No change	1.0	1.71-07	3.99-07	.43
Accumulators	No change	1.00-01		1.11-05	1.00
		1.00-03		5.77-07	1.00
		3.00-05		4.74-07	1.00
B - Without Overpressurization					
LPI	No change		5.12-12	3.94-09	.001
SI	No change		5.11-12	3.93-09	.001
RHR	No change		2.27-08	1.75-05	.001
Total CDF					
A - Overpressurization		1.00-01	1.14-05	1.30-05	.88
		1.00-03	7.51-07	2.46-06	.31
		3.00-05	6.47-07	2.35-06	.28
B - Without Overpressurization			2.28-08	1.75-05	.001
A and B		1.00-01	1.14-05	3.05-05	.38
		1.00-03	7.74-07	2.00-05	.039
		3.00-05	6.70-07	1.99-05	.034
Total CDF With ISL Outside		1.00-01	1.73-07	1.92-05	.009
		1.00-03	2.65-08	1.92-05	.001
		3.00-05	2.50-08	1.92-05	.001

Table 6.19
Core Damage Frequency - Calvert Cliffs
Combination of Corrective Actions

System	Initiator	P(Rupture)	CDF/Year Perturbed	CDF/Year Base	CDF Pert / CDF Base
A - Overpressurization					
LPI		1.00-01	2.71-12	1.07-09	.003
		1.00-03	6.16-14	1.07-09	.00005
		3.00-05	3.56-14	1.07-09	.00003
SI		1.00-01	7.75-16	6.21-11	1.2-05
		1.00-03	7.75-18	6.21-13	1.2-05
		3.00-05	2.32-19	1.86-14	1.2-05
RHR Suction		1.00-01	6.00-08	1.48-06	.04
		1.00-03	1.39-09	1.48-06	.001
		3.00-05	7.89-10	1.48-06	.001
Letdown		1.0	1.71-10	3.99-07	.43
Accumulators		1.00-01	8.73-06	1.11-05	.79
		1.00-03	5.33-07	5.77-07	.93
		3.00-05	4.53-07	4.74-07	.96
B - Without Overpressurization					
LPI			4.19-14	3.94-09	1.0-05
SI			2.28-14	3.93-09	5.8-06
RHR			2.35-09	1.75-05	1.3-04
Total CDF					
A - Overpressurization		1.00-01	8.96-06	1.30-05	.69
		1.00-03	7.06-07	2.46-06	.29
		3.00-05	6.25-07	2.35-06	.27
B - Without Overpressurization			2.35-09	1.75-05	1.3-04
A and B		1.00-01	8.96-06	3.05-05	.29
		1.00-03	7.08-07	2.00-05	.04
		3.00-05	6.27-07	1.99-05	.03
Total CDF With ISL Outside		1.00-01	6.24-08	1.92-05	.003
		1.00-03	3.75-09	1.92-05	.0002
		3.00-05	3.17-09	1.92-05	.0002

BROOKHAVEN NATIONAL LABORATORY
ASSOCIATED UNIVERSITIES, INC.
Upton, Long Island, New York 11973
(516) 282-7771
FTS 666-
Department of Nuclear Energy

August 29, 1986

Mr. Roy Woods
U.S. Nuclear Regulatory Commission
Reactor Safety Issues Branch
Division of Safety Review & Oversight
Phillips Building
7920 Norfolk Ave., MS-244
Bethesda, Maryland 20814

Dear Mr. Woods:

Re: FIN A-3829, Interfacing Systems LOCA at PWRs

Enclosed is a draft letter report covering Task 1B and 2B.

Sincerely,

G. Bozoki
Risk Evaluation Group

dm
cc: R. Youngblood
P. Kohut
W. Kato
W. Pratt

INTERFACING SYSTEMS LOCA AT PWRs

TASKS 1B AND 2B

DRAFT LETTER REPORT

G. Bozoki, P. Kohut

August 1986

Risk Evaluation Group
Department of Nuclear Energy
Brookhaven National Laboratory
Upton, New York 11973

Prepared for
U.S. Nuclear Regulatory Commission
Washington, DC 20555
Contract #DE-AC02-76CH00016
FIN A-3829

1. INTRODUCTION

1.1 Scope/Objective

The term "interfacing system LOCA" (ISL) refers to a class of nuclear plant loss-of-coolant accidents in which the Reactor Coolant System (RCS) pressure boundary (isolation valve, piping wall, etc.) interfacing with a supporting system of lower design pressure is breached. A subclass of these accidents takes on special concern, when the postulated flow path affects the availability of a safety system needed to mitigate the accident and by overpressurizing the system of lower design pressure, may induce secondary ruptures outside the containment, thus establishing discharge of coolant to the environment. Depending on the configuration and accident sequence, the Emergency Core Cooling System (ECCS) may fail, resulting in a core melt with containment bypass.

The Reactor Safety Study, WASH-1400,[1] pointed out that these types of accidents, called V-events, can be significant contributors to the risk resulting from core damage. (The V-events were defined for PWRs and involved the failure of two check valves in series or two check valves in series with an open motor-operated valve.) Further evaluations of the V-events in subsequent PRAs have found that their relative contribution to public health risk is even more pronounced compared with other sequences, because in recent PRAs more credit has been given to radionuclide retention in the containment for scenarios other than event V.

In spite of numerous analyses conducted in various PRAs, both the probability and the consequence estimates for the interfacing system LOCA (ISL) sequences are subject to substantial uncertainties. Depending on assumed valve failure modes, common cause contribution, valve monitoring, test and maintenance strategies, and statistical data handling methods, the total core damage frequency due to ISL accidents may vary from 10^{-4} to 10^{-8}/reactor year. The radiological consequences are also subject to large variations due to plant-specific features, the location of the secondary break, and the radionuclide behaviour under the particular ISL sequence (e.g., break is below or above water level).

Chapter 3 summarizes the results of an LER survey conducted for a search for ISL precursor events (overpressurization of interfacing lines or leakage through isolation boundary of RCS/support system of lower design pressure) which have occurred at PWRs. Detailed descriptions of the events found are given in Appendix A. Since Refs. 2 and 3 discusses some of the generic causes of pressure isolation valve failures, they are also omitted from this report.

1.3 References

1. "Reactor Safety Study - An Assessment of Accident Risks in U.S. Commercial Nuclear Power Plant," WASH-1400 (NUREG-75/914), USNRC, October 1975.

2. Interfacing Systems LOCA at BWRs - Draft Letter Reports, L. Chu, S. Stoyanov, R. Fitzpatrick, May 1986, July 1986.

3. Interfacing Systems LOCA at BWRs - Draft Letter Reports, L. Chu, S. Stoyanov, R. Fitzpatrick, May 1986, July 1986.

The ISL sequences have been a long standing concern for the NRC because of the considerable risk and the above-mentioned uncertainties. It has taken steps to impose requirements to reduce the frequency of ISLs and conducted a number of programs (analytical, experimental, inspection) to study various aspects of the ISL accidents. Currently, intersystem LOCA at LWRs is a Generic Issue. The objective of the present project is to provide technical support to NRC, Reactor Safety Issues Branch, for the meaningful resolution of this generic issue. The aims of the project are:

- to understand better the progression and effects of ISLs at PWRs and BWRs,
- to identify principal dependencies involved the ISL accident sequences,
- to assess the frequencies of overpressurization of low pressure systems and ISLs at PWRs and BWRs,
- to utilize better the existing design features and administrative controls for minimizing ISLs, and
- to identify methods for prevention, recovery or mitigation of ISLs and evaluate the associated costs and benefits.

In previous letter reports[2-3] submitted to NRC, the potential pathways and frequencies of ISL accidents at BWRs were discussed. In one of these reports,[2] historical background about the administrative actions of the NRC with regard to the ISL sequences (inspection, testing and monitoring requirements for isolation valves) has also been presented. Since this background is common for PWRs and BWRs, its description is not repeated here.

The present series of letter reports will describe the results of the analysis of ISL accidents at PWRs.

1.2 Organization

Chapter 2 will provide detailed information on the interfacing lines (piping layouts, valve arrangements, immediate plant response) for three PWR plants specifically selected for the analysis of ISL accidents.

2. SURVEY OF POTENTIAL ISL PATHWAYS AT REPRESENTATIVE PWR PLANTS

2.1 Selection of Representative PWR Plants

In order to analyze the progression of ISL scenarios at PWR plants of different design, three representative PWRs were selected:

- Indian Point 3, a Westinghouse (W) design,
- Oconee 3, a Babcock & Wilcox (B&W) design, and
- Calvert Cliffs 1, a Combustion Engineering (CE) design.

Table 2.1 presents some useful characteristics of these plants with regard to ISL analysis.

In spite of the different vendors and balance of plant designs, the reactors and Reactor Coolant Systems (RCS) are sufficiently similar from a fission product transport standpoint that one expects comparable results for the RCS portions of the source terms in case of a future radiological consequence analysis.

The design features of the Emergency Core Cooling Systems have only minor differences, mainly in the design of the safety injection lines to the reactor vessels; in the B&W design, the Low Pressure Injection and Core Flooding Systems inject directly into the reactor vessel and not into the cold legs.

Most of the major components of the High and Low Pressure Injection Systems are located in the Auxiliary Buildings, except the LPI/RHR Heat Exchangers at Indian Point 3, which are inside the containment.

Since the detailed system designs vary from plant to plant, necessitating attention to specific plant features, a survey was carried out to identify potential ISL pathways at the selected plants.

The approach and criteria used to identify interfacing lines are discussed in Section 2.2. Sections 2.3, 2.4, and 2.5 contain the detailed information on the interfacing lines identified for Indian Point 3, Oconee 3,

and Calvert Cliffs 1, respectively. These sections describe the piping layouts, valve arrangements and controls in the potential ISL pathways and the indication of overpressurization or pipe break.

Section 2.6 summarizes the additional information deemed to be necessary to assess overpressurization frequencies and to calculate core damage conditional probabilities or occurrence of ISL.

2.2 Identification of Interfacing Lines in Selected PWRs

The plant survey focused on such potential intersystem pathways where the boundary is represented by a high pressure/low pressure valve arrangement. Pathways, in which the isolation boundary is a pipe or coil wall (e.g., in heat exchangers or in reactor cooling pumps at seal cooling coils, etc.) were not considered.

Interfacing lines were identified as potential ISL pathways, if they satisfied all of the following criteria:

- the line connects to the RCS,
- the interfacing system has a design pressure lower than that of the RCS,
- the path could be overpressurized by introduction of primary system pressure due to inadvertent valve opening or failure from any cause, and
- if so overpressurized, the path could produce a leakage rate of primary system coolant of sufficient magnitude to cause significant risk.

Note, that among the criteria there is no one which would require explicitly that the lines penetrate the containment. Thus, the survey went beyond the usual identification processes, which involve the requirement for containment penetration.

The interfacing pathways have been identified through a review of all the systems interfacing directly with the RCS. As part of the review process, all the containment piping penetrations were also surveyed, as a kind of

crosscheck in order to insure that at least all the interfacing systems having containment penetrations have not been missed.

The main sources of information were the FSARs,[1-2-3] and additional information was gained from the detailed system descriptions given to us by the utilities running the plants. Useful information was also found in the PRAs[4-5-6] of these plants, as well as in a study of light water reactor safety systems conducted at the Oak Ridge National Laboratory in 1981.[7] The results[8] of a recent V-event inspection of the major "as built" interfacing paths at Indian Point 2 and Calvert Cliffs 1 plants conducted by NRC Region 1 personnel, also proved to be very helpful.

The major ISL pathways have been identified as the Low Pressure Injection/Residual Heat Removal, the High Pressure Injection and the Core Flooding Systems (see Table 2.1).

Isolable interfacing lines with diameters ranging up to two inches are not analyzed further. Their contribution to core damage is considered to be too small. This is because the expected flow through these lines is so limited that it may be within the capacity of the normally operating charging and/or HPI pumps. Break sizes smaller than two inches are not considered to have the potential for core uncovery in the unit FSAR's, as well (see Chapter 14, Results of Small Break LOCA). These lines are part of the RCS Drain, or RCS Sampling Systems.

The interfacing lines identified by the selection criteria and survey of available sources of information are detailed in the following sections.

For each of the interfacing lines, the piping and instrumentation drawings (P&IDs) of the appropriate system were used to review the valve arrangements and the pipe sections that potentially can be overpressurized. (Because of lack of redrawing capacity, usually a copy is made of the drawings that best describe the system or part of the system. This drawing is then appropriately modified by hand to adapt to the special requirement of the present report.)

The information given for each of the lines is detailed below:

1. Line and pressure isolation valve characteristics (size, location, type, operator, normal and failed position).
2. Automatic and manual control of PIVs and the system they belong to.
3. Monitoring.
4. Surveillance requirements.
5. Boundaries (valves) of overpressurized pipe sections after failure of PIVs.
6. Potential alarms and indications of overpressurization or ISL.

The information presented here is not considered to be final, because it was collected from still incomplete source materials; thus, it is subject to modification.

2.3 Interfacing Lines at Indian Point 3

The interfacing lines satisfying all the selection criteria given in Section 2.2 at Indian Point 3 are the following:

1. Low Pressure Injection Lines
2. Residual Heat Removal Suction Line
3. High Pressure Injection Lines
4. Core Flooding Tank (Accumulator) Outlet Lines
5. Letdown Line
6. Excess Letdown Line

The schematics of these lines are shown on Figures 2.3.1 through 2.3.6. Tables 2.3.1 through 2.3.6 provide additional information about the components involved.

2.3.1 Low Pressure Injection Lines

2.3.1.1 General

The LPI system at Indian Point 3 is designed to maintain core cooling during medium and large LOCAs. Following plant shutdown, when the pressure and temperature of the RCS are less than 450 psig and 350°F, respectively, its function is to remove residual heat (Residual Heat Removal, RHR System) from the core and reduce and maintain the temperature of the RCS. Figure 2.3.1 shows the flow paths during normal reactor operation, when the system configuration is that of the standby LPIS. The system fulfills its mission if at least one of the two pump-trains provides sufficient flow to keep the core covered after a large LOCA given that the two of three intact legs deliver flow to the core.

2.3.1.2 Operation and Control

In the standby configuration the valves of the system are lined up for automatic injection of borated water on SI signal to the core from the RWST.

The Technical Specifications require that:

a. Valves 882 and 744 in the suction and discharge lines, respectively, be open and their power supplies deenergized.
b. One LPI train (pump, heat exchanger with associate piping and valves) be operable.
c. Valve 883 in the RHR return line to the RWST is deenergized in the closed position.
d. The miniflow line (back to the suction of the LPI pumps) should be open with valves 1870 and 743 being open and their power supplies deenergized.

The RHR system purification path hand control valve (to the CVCS) HCV-133 is closed. The containment spray supply valves (from the RHR loop), 889A and B are closed. Similarly, the MOVs (1802A and B) to the recirculation pumps. The recirculation path to the HPI suction (MOVs 888A and B), and to the

containment suction (MOVs 885A and B) are closed. The RHR suction from the hot leg (loop 32) with MOVs 730, 731, and double disk valve 732 are also closed. The hydraulic control valves 638 and 640 are normally open. A crosstie insures the balanced flow distribution to the four branch lines. These lines feed the discharge lines of the core flood tanks, which feed the four cold legs. The check valves in the core flood tank discharge lines (Series: 897A, B, C, D) and in the branch lines (Series: 838A, B, C, D) isolate the LPI from the RCS. There are also two normally open MOVs in each of the two trains (MOV 889A, MOV 746, MOV 899B, and MOV 747), which in principle can be closed by the operator in the event if the PIVs failed. However, given PIVs failure, the SI signal first open these valves and during its resetting time (~3 min) the valves cannot be closed. The valves are of high pressure design with the aim that they will withstand the full RCS pressure. If the valves can be closed, an ISL event would be stopped.

Each of the trains have a relief valve (RV733A, RV733B) set at 600 psig. Their discharge is routed to the Pressurizer Relief Tank, PRT inside the containment. Both relief valves are expected to lift because of the crosstie. The aim of the design is to relieve low or medium sized leakage through the PIVs.

2.3.1.3 Indications of Overpressurization or ISL

A. Overpressurization

In the case that a pair of check valves (from the groups 897 and 838) leaks moderately, that part of the LPI which is in the containment till the check valve 741, will be overpressurized. The pressure would lift the relief valves and the discharge would flow to the PRT. Through HPI recirculation and the RHR the miniflow lines the reactor coolant can bypass the containment and arrive to the LPI suction side.

Indication:
a. "Auxiliary Building and Piping Trench Area High Temperature and Radiation (R-14) Alarms."
b. PRT level, temperature, pressure increase.
c. RHR heat exchanger outlet temperature increase.

B. Interfacing System LOCA

1. If the PIVs rupture, the pressure will break the heat exchangers or the check valve 741 with high probability and lift the relief valves. Thus, it will be a LOCA inside the containment.

2. If the piping in the containment is resilient enough, the most dangerous scenario is when the disk of the check valve 741 ruptures and the pressure wave causes an ISL at the LPI pumps.

Indication:

1. There is an SI signal and injections from the HPI and soon from the LPI systems. The water level in the RWST decreases. If the sump water level increases and there are erratic LPI branch line flow readings, the ISL is in the LPI system within the containment.
2. If the increase of the sump water level is not evident but the water level in the RWST decreases and also indications similar to a. and b. of the case A occur with erratic LPI branch line flow readings the ISL is in the LPI system and bypassed the containment.
3. The alarm indicating the start of the Auxiliary Building Sump Pump and high plant vent readings provide direct evidence for the ISL outside the containment.

Operator Actions: The operator tries to close MOV 744, then MOV 882 (to prevent draining RWST), and MOV 1869A and B (to isolate the HPI recirculation line with the miniflow to the LPI suction). The closing of RHR heat exchanger valves (MOV 747, MOV 899B, MOV 746, and MOV 899A) is also attempted. (If the break is not isolated promptly, the motors for the isolation valve operator may overheat.) The RHR pumps are shut off. Further actions depend on system and plant responses.

If an ISL occurred which bypassed the containment through the pathway discussed, the break would be above flood level unless it were at the LPI pumps. Since the pumps are at the lowest level of the Auxiliary Building at elevation EL.15'-0", the break may be flooded.

2.3.2 Residual Heat Removal Suction Line

2.3.2.1 General

The function of the RHR system during cold shutdown operations is described in Section 2.3.1.1. When the RHR is lined up for these operations, the reactor coolant flows from the hot leg of loop 32 of the RCS to the RHR pumps through the RHR heat exchangers and back to the RCS through loops 31, 32, and/or 33 and 34. The heat load is transferred by the RHR heat exchangers to the Component Cooling Water System.

The RHR suction line has two MOVs: MOV-731 and MOV-730 and a double disk manual (N_2 operated) valve 732. These should be open under cold shutdown when the RHR is operating but should be tightly closed under normal reactor operation or hot shutdown. Figure 2.3.2 shows the valve arrangement under these operations. Table 2.3.2 gives some additional information on the valves.

2.3.2.2 Operation and Control

When these valves of dual functions isolate the RHR suction line from the RCS (during normal reactor operation or hot shutdown) to avoid potential RCS boundary leakage, both of the MOVs are kept closed with the corresponding motor control center breakers locked in the off position. In addition, these values are pressure interlocked. They get an automatic close signal, if the RCS pressure increases to 550 psig. The motor of these valves is also specially designed. The motors are undersized such that these valves cannot open against the large differential pressure which exists across the valve seat at power operation.

In order to secure the isolation of the RHR line, the double disk hand operated stop valve 732 is also locked. To avoid pressure buildup the low pressure piping section, there is a relief valve, RV-1896 on a pipe segment of 2" dia. The relief valve setpoint is at 600 psig. Its discharge is routed to the PRT.

The two MOVs are of crucial importance for the plant safety. Both these valves could conceivably be spuriously opened if individual shorts (e.g., because of fire) occur in the control cables of each MOV breaker, that run between the respective motor control centers (2FM on MCC 36A and RFM on MCC 36B at EL.55'-0" of the Auxiliary Building for MOV-730 and MOV-731, respectively) and the control room. To avoid this spurious operation, the fuse disconnect of both valves is normally kept open during normal plant operation, isolating the 480V ac power at the respective MCC cubicle. These valves will be locally operated to align the RHR system for cold shutdown operation.

2.3.2.3 Indication of Overpressurization or ISL

A. Overpressurization

In the case that the isolation valves MOV-730, MOV-731, and manual (N_2 operated) valve 732 are leaking the overpressurized zone will be that piping section which is bounded by the LPI pumps and check valve 881 in line to the RWST. However, through the miniflow line essentially that part of the LPI which is in the containment till check valve 741 would also be overpressurized. The overpressurization may induce unstable conditions at the seating of the isolation check valves in the injection lines of the LPI. Then, these conditions may initiate an ISL.

The leakage is expected to lift the relief valve inside the containment.

Indication: The same as Indication a. and b. in Section 2.3.1.3.

B. Interfacing System LOCA

In the case the isolation valves MOV-730 and MOV-731 would rupture or fully open, an ISL can occur bypassing the containment at normally closed valve 732. If the body of this valve survives, an ISL can occur at the seals of the LPI pumps assuming that the disk of check valve 881 is ruptured. In both cases a massive flood would occur in the auxiliary building, which would be even ameliorated by an additional flow from the RWST.

Indication: Similar as it was discussed in Section 2.3.1.3, Indication b.

It is expected that only breaks at the LPI pumps would be under flood level.

2.3.3 High Pressure Injection Lines

2.3.3.1 General

The HPI system at Indian Point 3 is designed to provide cooling water to the RCS in case of a small (less than two inches), or a medium (two to six inch) LOCA. It is also used in the case of a secondary steam break accident. While the design pressure (1500 psig) of its piping is significantly higher than that of the LPI (600 psig), nevertheless, it is only 60% of the design pressure of the RCS piping (2500 psig). The design pressure of the suction side piping of the HPI pumps is much less: 210 psig. The types of the pumps are not of positive displacement, thus the system represents a kind of "intermediate" case of analyzing ISL pathways. Since the HPI has a very important role in the safety of the plant, it is included in the analysis.

During normal reactor operation the system is lined up for safety injection. Figure 2.3.3 shows the flow paths for this case. The system fulfills its mission (medium LOCA) if two of three pumps provides sufficient cooling water to two of four injection legs. Two of the four injection paths are required to deliver water to the core. The system design incorporated the ability to isolate the safety injection pumps on separate headers such that full flow from at least one pump is ensured should a branch line break.

2.3.3.2 Operation and Control

The motor-operated valve to the RWST, MOV-1810 is normally open and kept deenergized. The MOVs in the discharge lines (Series of MOV-856) to the cold legs are maintained in the open position. The motor-operators of MOV-856A,D,F, and K are electrically disconnected. The valves MOV-856C,E,H, and J receive an open signal upon actuation of the SI signal. The MOVs to the hot legs of RCS loop 1 and loop 3, MOV-856G and MOV-856B are signaled to open. Motor-operated valves MOV-1835A and B, as well as, MOV-1852A and B, on the Boron Injection Tank (BIT) line are also signaled to open. Pressure and flow indications, decreasing tank levels and alarms indicate the status of the system. There is a test line (dia. 3/4") relief valve RV-855 to relieve any pressure above design that might build up to the PRT. The valve can pass about 15 gpm.

Except the hot leg line, each of the branch lines (dia. 2") of line 56 feeds an accumulator discharge line. Thus, on each of these lines there are three isolation check valves (one 897 and two 857; e.g., to the cold leg of loop 1, 897A, 857A, and 857G). The cold leg branch lines (dia. 1.5") of line 16 join directly to the cold legs. On these lines there are only two isolation check valves (two from the series 857, e.g., to loop 1, 857E and 857L).

On each of the two branch lines feeding directly the hot legs (dia. 2") there are two 857 check valves and a closed MOV (a 856 valve).

Upon SI signal, all the three HPI pumps start and the valves in line 16 open, to allow flow through the BIT.

2.3.3.3 Indication of Overpressurization or ISL

A. Overpressurization

In the branch lines of line 56 three PIVs have to fail to cause overpressurization or ISL. These are either the three check valves in series (on the lines to cold legs) or the two check valves and a closed MOV (on the

line to the hot leg). In this case the overpressurized part of HPI will be those pipe sections which are bounded by check valves 858B, 852A, 849A, and the locked closed valve 859A on the test line back to the RWST. The relief valve RV-855 will be opened discharging to the PRT. It is easy to see that the overpressurization disables only line 56 of the LPI.

In the branch lines of line 16, two PIVs have to fail to cause overpressurization. The overpressurized section is limited by check valves 855A, two normally closed MOVs (1835A and B) the locked closed manual valve 859A and the manual valve 1838A. The relief valve would also be lifted.

Indication: PRT level, temperature, pressure increase.

B. Interfacing System LOCA

In order to obtain an ISL at the HPI pumps 31 or 32 via line 56 an additional check valve has to fail. If either of the check valves 852A or 894A failed, there would be an ISL in the auxiliary building. The relief valve RV-855 would be lifted. The pumps are at the EL.34'-0" of the auxiliary building, so the flood would be drained down to lower elevation. The environmental conditions in the pump room, however, may prevent the pumps to work.

Indication: SI signal. Erratic HPI branch line flows. RWST level decreases. No containment sump water level increase. "High temperature and radiation alarm in the piping trench area and in the auxiliary building." PRT level, temperature, pressure increases. High plant vent readings. Start of the automatic sump pump in the auxiliary building.

Operator Actions: Operator tries to isolate the line which has the break. Further actions depend on system and plant responses.

2.3.4 Core Flooding Tank (Accumulator) Outlet Lines

2.3.4.1 General

The core flooding tanks are pressure vessels filled with borated water and pressurized with nitrogen gas. They are designed to provide enough flow to initiate recovery of the core in the case of a large LOCA before the LPI starts to deliver flow. Injection occurs, when the RCS pressure drops below the nitrogen gas pressure (650 psig) in the tanks. Each Core Flooding Tank Outlet Line is connected to a RCS cold leg pipe. The pressure in each tank is monitored by two pressure sensors. Low and high level alarms annunciate out-of-limit water levels. There is also a pressure relief valve for each accumulator. The relief valve discharges to the containment.

2.3.4.2 Operation and Control

There are two isolation check valves and a motor-operated valve in each outlet line (e.g., in loop 1; check valves 897A, 895A, and MOV-894A). The MOVs are normally deenergized open when the RCS pressure is higher than 1000 psig and receive open safeguards actuation signal. The valve arrangements of the lines are shown in Figure 2.3.4. Should the RCS pressure fall below the tank pressure, the check valves open after about 25 seconds and borated water is forced into the RCS. The check valves are specially made for boric acid operation. The check valves operate in the closed position with a nominal differential pressure across the disc of approximately 1650 psi.

2.3.4.3 Indication of Overpressurization or ISL

If the isolation valves in an accumulator outlet line fail, the line and the tank will be overpressurized. The liquid level will also increase . (Small leakage can be detected by chemical analysis of the boron concentration. The allowed leakage for an accumulator check valve is 2cc/hr/in of nominal pipe size.) The accumulator relief valves will pass first nitrogen gas. At higher inleakage it would pass also water.

Indication: Accumulator pressure and level alarm. High radioactivity alarm in containment. Increasing containment sump level.

Rupture of the check valves would cause, of course, the loss of a tank and a large ISL in the containment.

2.3.5 Letdown Line

2.3.5.1 General

During plant startup, normal operation, load reductions and shutdowns reactor coolant flows through the letdown line from the cold leg of reactor coolant loop 1 via the CVCS volume control tank and holdup tanks to the suction side of the charging pumps. An excess letdown line is also provided (see Section 2.3.6).

The normal letdown line (dia. 3") is a normally open pathway penetrating the containment. It branches into three orificed lines (dia. 2") after going through the regenerating heat exchanger (to preheat incoming charging water). The reactor coolant pressure drops from 2235 psig to about 275 psig, when flowing to one of the orifices. The design pressure of the piping downstream of the orifices is 600 psig. The schematics of the line is shown on Figure 2.3.5.1.

2.3.5.2 Operation and Control

Each of the branch lines contains an air operated valve, inside the containment (200A, 200B, 200C). There are also two solenoid operated valves outside the containment, which are automatically closed by a containment isolation signal. The line has two remote air operated valves (LCV459, LCV460) and a relief valve, RV-203 with setpoint at 600 psig.

2.3.5.3 Indication of Overpressurization or ISL

If air operated valves 201 and 202 close because (e.g., fire energizes the coil) its coolant pressure downstream of the orifices will increase. This

will lift the relief valve 203 which discharges to the PRT. If the valves LCV-459 and LCV-460 cannot close the low pressure piping breaks (an ISL within the containment).

Indication: "Letdown Relief Valve High Temperature Alarm." PRT level, temperature, pressure increase. Automatic close signal on low pressurizer level to LCV-459, LCV-460. Concurring SI signal.

If a rupture of the letdown line occurred outside the containment the leakage would be restricted to the piping trench area and the auxiliary building. Any leakage would be collected by the building radioactive drains. The leakage would be within the makeup capacity of the charging pumps and could be readily isolated and the excess letdown line would be placed in service.

Indication: Auxiliary Building and Piping Trench Area High Temperature and Radiation Alarms. Start of Auxiliary Building Sump Pump.

2.3.6 Excess Letdown Line

2.3.6.1 General

Under certain plant conditions or when the normal letdown line is isolated the excess letdown is in service. It would transport reactor coolant to the CVCS volume control tank, via the RCP seal leakoff return path.

2.3.6.2 Operation and Control

The excess letdown line (dia. 1") is normally closed. The pipe arrangement is shown on Figure 2.3.6. There are three valves on the line (that fail in the closed position). One of the valves, HCV-123 utilizes an analog instrument signal for operation of the valve. This valve contains an orifice that regulates flow through the valve. The pipe design pressure changes at the outlet of the valve.

2.3.6.3 Indication of Overpressurization or ISL

In order to open spuriously the valves application of voltage (hot shorts) would be required and sustaining of that configuration continuously. The event is very unlikely. However if spurious operation of these valves does occur, the low pressure piping would be overpressurized (leakage to the reactor coolant drain tank) or broken at valve 215. This later events may cause RCP seal cooling loss.

Indication: Increasing level, pressure of reactor coolant drain tank. Typical signals of small LOCA within the containment. Operator may close RCP seal return MOV-222.

2.4 Interfacing Lines at Oconee 3

The following interfacing lines have been identified that may be subjected to an interfacing system LOCA at Oconee 3:

1. Low Pressure Injection Lines
2. Decay Heat Removal Suction Line
3. Core Flood Tank Outlet Lines
4. Low Pressure Auxiliary Pressurizer Spray Line
5. RCS Letdown to Coolant Treatment System

These lines are shown schematically in Figures 2.4.1 through 2.4.4 and Tables 2.4.1 through 2.4.5 list additional informations.

2.4.1 Low Pressure Injection Lines

2.4.1.1 General

In normal reactor operation the main purpose of the LPI system is to remove decay heat from the reactor core during shutdown. In emergency operation, the LPI is designed to maintain core cooling for large LOCA and to control boron concentration in the core. There are two separate flow paths,

as indicated on Figure 2.4.1; each includes one pump, one heat exchanger, and isolation valves.

2.4.1.2 Operation and Control

In emergency mode the LPI is automatically initiated at: a) low reactor coolant system pressure or b) at high containment pressure. Initially the system is aligned such that the LPI pumps take suction from the borated water storage tank and the normally closed isolation valves LP-17 and LP-18 automatically open, allowing water to be injected into the reactor vessel. After the initial injection phase the LPI system is switched over to the recirculation mode by connecting the suction side either to the containment building emergency sump or to the normal decay heat suction line.

In the decay heat removal mode, after the RCS pressure is reduced to 255 psi, the LPI pumps are connected to the RC hot leg and discharged through the heat exchangers and the open isolation valves LP-17 and LP-18.

The LPI lines are connected to the reactor vessel and each injection loop is isolated by two check valves (CF-12, LP-47, and CF-14, LP-48) and normally closed MOVs (LP-17 and LP-18).

2.4.1.3 Indications of Overpressurization or ISL

In case the isolation valves fail the low pressure piping downstream of LP-17 and LP-18 will be overpressurized. The low pressure pipe includes the decay heat cooler and bounded by valves LP-31, LP-33, LP-9, LP-10, LP-15, LP-16. A pressure relief valve is included in each injection line against relatively small leakages from the HP system.

If overpressurization or interfacing LOCA occurs at the LPI lines, the following indications may be available to the operator:

1. High DHR Pump Discharge Pressure
2. High DHR Cooler Outlet Temperature
3. Injection Line Flow Indications

4. Auxiliary Building Vent High Radiation Alarm
5. RC System Pressure Indication

2.4.2 Decay Heat Removal Suction LIne

2.4.2.1 General

The LPI system is used in normal operation to remove decay heat from the reactor core during shutdown. The DHR cooling is initiated when the reactor pressure is below the suction piping design pressure.

2.4.2.2 Operation and Control

The system is connected to the RC hot leg line (see Figure 2.4.2) by opening LP-1, LP-2, and LP-3 and delivers the water back to the reactor vessel through the LPI pumps and coolers. The isolation valves can be manually operated from the main control room. In addition, isolation valves LP-1 and LP-2 have interlocks to prevent their opening whenever the RCS pressure is above the design pressure of the suction piping. The motor-operated isolation valves are stroke tested at least quarterly in cold shutdown conditions.

2.4.2.3 Indications of Overpressurization or ISL

If the isolation valves fail, the low pressure piping that will be overpressurized, is bounded by the LPI pumps, valves LP-29, LP-30, LP-19, LP-20, BS-7, BS-9, and the RB spray pumps. There are two relief valves in the suction pipe. One inside the containment discharging to the emergency sump, and the other outside in the auxiliary building that discharges to the high activity waste tank.

The following indications may be available to the operator if overpressurization or interfacing LOCA occurs.

1. LP Suction Line Pressure and Temperature Indications
2. RB Normal Sump Level Indication/Alarm
3. High Activity Waste Tank Level Indication/Alarm

4. Auxiliary Building Vent Radiation Alarm
5. RCS Pressure Indications

2.4.3 Core Flooding Tank Outlet Line

2.4.3.1 General

The core flooding system is designed to provide core cooling in case of intermediate or large RCS pipe breaks. The system automatically floods the core when the RCS pressure drops below 600 psig.

2.4.3.2 Operation and Control

Each core flood tank outlet line is connected to the reactor vessel core flooding nozzle, and each line contains two isolation check valves (CF-11,12 and CF-13,14) and one MOV (CF-1 and CF-2), which is fully open during normal operation (see Figure 2.4.3). No operator action or automatic signal is required to initiate the operation of the core flooding system. The check valves are leak tested at each cold shutdown utilizing the test rig indicated on Figure 2.4.3. The stop MOVs are stroke tested simultaneously with the check valve leak test.

2.4.3.3 Indications of Overpressurization or ISL

If the isolation check valves (CF-11,12 and CF-13,14) fail the core flood tank outlet line and the tank itself will be overpressurized. The flood tank has a pressure relief valve, which would open and relieve the pressure by discharging portion of the nitrogen blanket to the atmosphere.

There are a number of indications available to the station operator indicating overpressurization or interfacing LOCA at the core flood system:

1. Core Flood Tank Level and Pressure
2. RCS Pressure
3. RB Emergency Sump Level
4. RB Vent High Radioactivity

2.4.4 Auxiliary Pressurizer Spray Line

2.4.4.1 General

The auxiliary pressurizer spray line (see Figure 2.4.3) is available to control RCS pressure at low pressure operations. Its use is limited and is not presently specified in any operational procedure.

2.4.4.2 Operation and Control

The line is normally closed off by two manual isolation valves in addition to the isolation check valve (LP-45, LP-62, LP-63, LP-46).

2.4.4.3 Indications of Overpressurization or Interfacing LOCA

The failure of the isolation check valve LP-46, together with the manual isolation valves LP-62 or LP-63 would pressurize the LPI lines. If the containment isolation valves on these lines also fail (either LP-17 or LP-18), the LPI lines in the auxiliary building would be overpressurized. This is identical with the LPI failure mode discussed in Section 2.4.1.3. An interfacing LOCA through the auxiliary pressurizer spray lines (1.5" diameter) can be considered as a very small LOCA, not capable of core uncovery, since the makeup capacity of one HPI pump is sufficient to maintain RCS inventory with break size smaller than .04 ft^2.

2.4.5 Letdown Line

2.4.5.1 General

The function of the letdown flow is to accommodate RC volume changes due to thermal expansions and the need for removing impurities as well as controlling boron concentration in the coolant (see Figure 2.4.4). The letdown flow is isolated from RCS pressure by a passive pressure reducing orifice.

2.4.5.2 Operation and Control

Each letdown cooler outlet line has one inboard motor-operated containment isolation valve. One pneumatic outboard containment isolation valve is provided upstream of the pressure reducing orifice (HP-3, HP-4, HP-5).

2.4.5.3 Indications of Overpressurization or ISL

Overpressurization or interfacing LOCA can occur in the letdown line only if a normally open valve downstream of the pressure reducing orifice (HP-8 or HP-195) is accidentally closed overpressurizing the low pressure line. If the line downstream of the pressure reducing orifice ruptures the result is a very small LOCA with restricted outflow from the RCS. This interfacing LOCA is not capable of core uncovery as was previously noted (see Section 2.4.4.3).

Indications available to the operator include:

1. Letdown Storage Tank Low Level Alarm
2. RCS Pressure Indication
3. High Radioactivity in Auxiliary Building

2.5 Interfacing Lines at Calvert Cliffs 1

The interfacing lines identified according to the selection criteria listed in Section 2.2 at Calvert Cliffs 1 are the following:

1. Low Pressure Injection Lines
2. Residual Heat Removal (Shutdown Cooling) Suction Line
3. High Pressure Injection Lines
4. Core Flooding Tank (Safety Injection Tank) Outlet Lines
5. Letdown Line

The schematics of these lines are shown in Figures 2.5.1 through 2.5.5. Tables 2.5.1 through 2.5.5 present additional information about the components involved.

2.5.1 Low Pressure Injection Lines

2.5.1.1 General

The LPI system is designed at Calvert Cliffs 1 to provide core cooling water during the injection and recirculation phases of a large LOCA. The second function of the system is to provide shutdown cooling flow through the core and shutdown cooling heat exchangers. During plant operation with the RCS at normal operating pressures and temperatures, the LPI is maintained in a standby mode with all of its components lined up for emergency injection. The system lineup is shown on Figure 2.5.1. The success criterion of the system is that at least one of the two pump trains provides sufficient flow from the RWST via one or more out of four safety injection headers to keep the core covered after a large LOCA.

2.5.1.2 Operation and Control

The two LPI pumps take suction on two suction headers from the RWST. The LPI pumps discharge through check valves to a common discharge header (dia. 12"). The header pressure and flow are indicated in the control room (ranges: 0-600 psia for pressure and 0-6000 gpm for flow). There is an air operated flow control valve on the header, SI-306 which is locked open (it is Tech. Spec. requirement, because of lack of redundancy). A relief valve SI-439 protects the header against overpressurization. The relief setpoint is 500 psig, the design pressure of the LPI piping.

The LPI header splits into four injection lines (dia. 6"). Each of the LPI lines has a MOV isolation valve controlled by a hand switch located in the control room (SI-615, SI-625, SI-635, SI-645). They can be throttled. Valve position indicators and line flowmeters are signaled in the control room. The valves are normally closed. They open automatically upon receipt of an SI signal. They fail "as is."

After the MOVs there are two isolation check valves on each of the four branch lines (e.g., SI-114, SI-118). The HPI lines join in these pipe sections to form a common inlet to the outlet lines of the Core Flooding

Tanks. Thus, the three injection system, HPI, LPI, and the Core Flooding Tanks share four common injection paths into the RCS via common final isolation valves (see, e.g., SI-217). One isolation check valve on each branch line (e.g., SI-118) is of "weighted open" types (to promote opening).

The LPI is automatically actuated by an SI signal. No operator action is required in the injection phase; the discharge line isolation valves are opened. If the RCS pressure drops below about 200 psig, the LPI starts delivering flow. The miniflow line back to the RWST with open motor operated valves (SI-659, SI-660) stays open during the injection phase (power is normally removed from the valve operators).

2.5.1.3 Indication of Overpressurization or ISL

In order to have an overpressurization or ISL three check valves and a motor operated valve have to fail. Due to the number of valves in series, the probability of these failures seems to be very small. The overpressurized zone would be the whole LPI system. Break is expected to occur at the LPI pump seals.

Indication: In the case of small inleakage, relief valve SI-439 would open. In the case of an ISL, high temperature, high radiation alarms would be generated from the piping tunnel area, or from the ECCS pump rooms 11 and 12 in the auxiliary building. This alarm would concur with typical LOCA signals.

2.5.2 Residual Heat Removal Suction Line

2.5.2.1 General

Following reactor shutdown and cooldown the LPI is used in the shutdown cooling mode for further cooling of the RCS when the coolant temperature drops below 300°F and coolant pressure falls below 270 psig. The system in this mode is called Shutdown Cooling System at Calvert Cliffs 1. For this mode, the system is manually realigned and the LPI pumps take suction from the hot leg of coolant loop 2. The heat load is transferred by the shutdown cooling

heat exchangers to the component cooling water system. The reactor coolant returns to the RCS through the LPI header.

The RHR suction line (dia. 14") has two motor operated isolation valves: SI-652 and SI-651. The two isolation valves are shut during normal safety injection operation, and are opened during shutdown cooling. The schematic of the valve arrangement with the suction side piping of the shutdown cooling system is shown in Figure 2.5.2.

2.5.2.2 Operation and Control

The first isolation valve, SI-652, is located inside the containment and is controlled by key operated hand-switch (1-HS-3652 on a control panel). The second isolation valve, SI-651, is located outside the containment and it is also controlled by a key operated hand-switch (1-HS-3651). These valves are interlocked with pressurizer pressure "signals" such, that the valves shut automatically when the pressure rises above 300 psia. The valves are locked closed, both locally at the MCCs and on the control board. The keys are kept under administrative control to ensure that the valves cannot be opened inadvertently. In addition, with the help of newly installed redundant pressure signal channels the opening control circuit of the valves are also interlocked. These interlocks represent independent and redundant means for preventing the opening of the valves. In the event of main control room evacuation, the necessary control functions are transferable to the auxiliary control room. The position of the MOVs are continuously indicated on the control board with lights.

The valves are specially made, double disk (flex wedge) MOVs with undersized motor, such that these valves cannot be open against the large differential pressure which exists across the valve seat. A relief valve SI-469 is provided between the two valves to protect the piping between the valves from sudden pressure changes (e.g., due to sudden temperature increase in the containment). The setpoint is at 2485 psig. A second relief valve, SI-468 is located on the suction line, to protect the line from overpressurization. The relief setpoint is 315 psig. The design pressure of the suction line is 300 psig. (The valve is sized originally to protect the

line from overpressure due to simultaneous operation of the charging pumps and shutdown cooling with the pressurizer in solid condition.)

2.5.2.3 Indication of Overpressurization or ISL

A. Overpressurization

If the first isolation valve SI-652 leaks, the operator is alerted by the discharge through the first relief valve. This would prompt him to initiate shutdown.

If both isolation valves, SI-652 and SI-651 are leaking, an overpressurization zone would be generated. The zone would be bounded by the normally closed manual valves SI-441 (for LPI pump 11) and SI-440 (for LPI pump 12), isolation valve SI-399 of the recirculation line from the LPI injection header (normally shut) and manual (normally shut) isolation valve, 26M3-1 of the common inlet of the lines from the CVCS and from the Spent Fuel Pool Cooling System.

Indication: Both relief valves would cause considerable leakage and high temperature alarm would be in the auxiliary building.

B. Interfacing System LOCA

If both of the MOVs rupture a massive ISL would occur in the piping trenches and/or in the auxiliary building.

Indication: The event would be an extra-containment LOCA, with the associated consequences.

2.5.3 High Pressure Injection Lines

2.5.3.3 General

The HPI system at Calvert Cliffs 1 is designed to inject borated water from the RWST into the RCS to prevent the uncovering of the core in case of

small or intermediate size LOCA. The system is capable of delivering borated water at discharge pressures up to 1275 psia. The design pressure of its piping (1600 psig) is much higher than that of the LPI (500 psia), but, it is only 64% of the design pressure of the RCS piping (2485 psia). The design pressure of the suction side piping of the HPI pumps is 300 psig. The type of the pump is centrifugal (not of positive displacement), thus the system is also a kind of "intermediate" case for potential ISL pathways, as the LPI system of Indian Point 3. Thus, it is included in the analysis.

The HPI system of Calvert Cliffs 1 is a two-train, three pump system which injects into the four RCS cold legs via four injection headers. Figure 2.5.3 shows the lineup of the system for injection. The system fulfills its mission, if one of three pumps provide flow through one of four headers to the RCS.

2.5.3.4 Operation and Control

Two separate suction headers supply the three HPI pumps with water from two possible sources: the RWST and the containment sump. The motor operated valves are normally open to the RWST. The three HPI pumps discharge through check valves to a common header. In this header there are two motor operated valves: SI-655 (normally open) and SI-653 (normally closed). The valves allow flexibility for pump realignment.

There are two HPI headers: the main header and the auxiliary header. The motor operated isolation valve for the main header is open and receives "open" signal when SI signal is generated. Downstream of this valve there is a relief valve, SI-409, which protects the header (against pressure developed to a sudden temperature increase) and a pressure indicator (range = o to 200 psig, the indicator is not shown in the figure). The setpoint of the relief valve is 1485 psig.

The main header splits into four parallel lines. Each of the lines has a motor operated isolation valve (SI-616, SI-626, SI-636, SI-646) which are normally closed. They open automatically upon receipt of a SI signal. (These valves can be positioned from fully open to fully shut by hand switches, in

order to throttle the lines' flow. Position indicators are available.) Each of the main lines joins to a respective auxiliary line (dia. 2") to form a common line which passes through a check valve (SI-113 to SI-143, respectively) and flow elements (range: 0 to 300 gpm, not shown). This line joins to a respective LPI line to form one of the four injection paths to the RCS.

The valve/instrumentation arrangement of the auxiliary header is the same.

The four injection paths enter the containment where they form to core flooding tank inlets to the RCS could legs (via a check valve and isolation valve, see Sections 2.5.1 and 2.5.4).

The system is actuated automatically upon receiving SI signal. Operator action is required only for starting recirculation operation.

2.5.3.5 Indication of Overpressurization or ISL

In any injection line three check valves and one motor operated valve have to fail to generate an overpressurization or an ISL. The frequency of these events seems to be very small.

A. Overpressurization

In the case of overpressurization, it is expected that only one of the two trains would be overpressurized, because the two trains are isolated.

Indication: The relief valve associated with the train which was overpressurized would relieve. Pressure sensor would indicate the pressure.

B. Interfacing System LOCA

In order to have an ISL at the suction side of an HPI pump, the shock wave should brake an additional check valve. If this happens, the ISL seems to be isolable, because the MOV (either SI-656 or SI-654) of the train in which the LOCA occurred, may be closed. This may succeed because the flow is limited by the size of the header branch lines (dia. is only 2").

Indication: The relief valve associated with the train would relieve. Pressure sensors would indicate the pressure. High temperature and radiation alarms would be in the auxiliary building, with symptoms similar to a small-small LOCA. After SI one or two HPI pumps would not operate, because three pumps are located in two compartments.

2.5.4 Core Flooding Tank Outlet Lines

2.5.4.1 General

The Core Flooding Tanks are called Safety Injection Tanks (SITs) at Calvert Cliffs 1. They are sized to ensure that following an RCS depressurization caused by a design base accident, three of the four tanks will inject sufficient borated water to cover the core until the safety injection pumps can provide water for core cooling. During normal plant operation the SITs are approximately half filled (total volume per tank is 2000 ft^3) with borated water and pressurized with nitrogen between 200 and 250 psig. Each SIT is connected to an RCS loop cold leg through two check valves in series (see Figure 2.5.4). They are normally held shut by the higher RCS pressure. A motor operated gate valve is provided between the two check valves on the SIT outlet. This valve is normally open and is shut to isolate the SIT and prevent emptying it during plant cooldown and depressurization. The SITs have instrumentation and alarms which provide indication of the SIT level and pressure. The SITs are provided also with relief valves and can be vented to the atmosphere via air operated vent valves. The setpoint of the relief valves is 250 psig. The vent valves are normally shut and the vent lines are normally capped.

2.5.4.2 Operation and Control

The SITs are passive components and require no operator or control action to actuate. During normal plant operation the MOVs are locked open, their associated circuit breakers deenergized, their position indication is checked by every shift in the control room. The two check valves serve to prevent the reactor coolant from entering the SITs.

A leakoff return line is used to send any leakage between the two SIT check valves to the reactor coolant drain tank or the RWST. Each SIT has an air operated isolation valve in its leakoff return line. They are normally shut and shut automatically (if open) for a SI signal. The four leakoff return lines join in a common return line. The isolation valve to the RC drain tank (SI-661) is a normally open air operated valve, which shuts automatically for an SI signal. To send leakoff flow to the RWST, two manual containment isolation valves (SI-463, SI-455) can be opened. There is a relief valve (SI-446) has a setpoint at 360 psig, to protect the line from overpressurization during SIT check valve testing. It relieves to the RCS quench tank.

For filling, draining, sampling, and correcting the boron concentration of the tanks additional miniflow lines are provided.

2.5.4.3 Indication of Overpressurization or ISL

In order to indicate potential isolation check valve failures, pressure indicators are used in the outlet lines between the isolation check valves and the SIT outlet check valves. The range of the pressure indicators extends from 0 to 2500 psig. The pressure signal actuates an alarm at a setpoint of 300 psig.

Indication: Overpressurization of a SIT outlet line is indicated by "SIT Check Valve High Pressure" alarm. In leakage and/or overpressurization of a tank is signaled by "SIT Pressure/Level Hi" alarms (setpoints: 235 psig, 228 in). Check valve ruptures would cause, of course, an ISL within the containment resulting

in the usual symptoms. A simultaneous rupture of an isolation check valve and an air operated valve failure on the leakoff return line may cause also a small ISL in the containment.

2.5.5 Letdown Line

2.5.5.1 General

In order to control coolant chemistry, minimize corrosion and compensate for coolant expansion due to temperature changes during most of normal plant operations coolant flows from the cold leg of a reactor coolant loop (loop 12-A) to the suction side of the charging pumps.

The letdown line (dia. 2") first passes though the tube side of the regenerative heat exchanger (where the temperature is reduced to 260°F) then it flows through the letdown control valves, purification filters, ion exchangers into the volume control tank of the CVCS. The charging pumps take suction from the volume control tank. Figure 2.5.5 shows the flow schematic of the letdown flow (good quality drawing of the CVCS is not available presently at BNL). The pressurizer level control system regulates the letdown flow by adjusting the letdown control valves, so that the letdown flow plus the reactor coolant pump controlled bleed off matches the input from the operating charging pumps. The valves reduce the pressure of the letdown fluid from the regenerative heat exchanger from about 2250 psig to 460 psig. The valves are pneumatically operated and fail closed. Flashing of the hot liquid between the letdown control valves and the letdown heat exchanger is prevented by controlling back pressure with a pressure control valve downstream of the letdown heat exchanger. The design pressure of the piping downstream of the letdown control valves is 650 psig.

A spring loaded excess flow check valve (dia. 2") on the letdown line inside the containment serves to shut in the event that the flow through the letdown line reaches 200 gpm as would occur in the event of a letdown pipe break, thus limiting the letdown flow in the auxiliary building (its design pressure is 2485 psig). There are also two isolation valves of the letdown line inside the containment upstream of the regenerative heat exchanger.

2.5.5.2 Indication of Overpressurization or ISL

A break or crack in the letdown line will result in flashing of the blowdown released in the piping penetration room (west) or letdown heat exchanger room in the auxiliary building. The ISL will cause compartment pressurization. Four pressure sensors are installed in the west piping penetration room and letdown heat exchanger room to detect the rise in ambient pressure. The pressure signal generated by the sensors automatically close the letdown isolation valves. Pressure relief for the letdown heat exchanger room is provided by an open blockout connecting to the west piping penetration room. Pressure in the penetration room will be gradually decay. No excessive amounts of water will be released, because the excess flow check valve will seat and terminate blowdown. An ISL with more coolant loss may occur if

a) a break occurs in that part of the piping where feedback signals cannot be generated to the isolation valves and/or to the excess flow check valve,
b) these valves are unavailable for some reason, and
c) charging pump(s) continue to work.

Following rupture of the letdown line in the auxiliary building, the applicable emergency operating procedures would be implemented.

2.6 Needs of Additional Information

The previous sections did not discuss in detail the test and surveillance of the isolation valves of the interfacing lines. At the present time, there are only limited informations available on unit specific testing and maintenance records, activities and procedures and these are being collected. Without these informations it is hard to quantify the probability of overpressurization of the piping associated to the listed potential pathways. Even, if they were available, and ideal approach would be to work out a failure model for the test/maintenance program of the isolation valves including the regulatory requirements. Application of simple "human factors" may lead to gross errors in the quantification.

The information needed to assess the effect of postulated ISLs on safety systems required to mitigate the accident is also being collected. Without this information it seems to be very difficult to evaluate properly the spatial system interaction effects due to overpressurization, flooding, drainage, etc.

2.7 References

1. Indian Point 3, Nuclear Power Plant, Power Authority of the State of New York, "Final Safety Analysis Report," July 1982.

2. Oconee Nuclear Station, Units 1, 2, and 3, Duke Power Company, "Final Safety Analysis Report," December 1981.

3. Calvert Cliffs 1 and 2, Baltimore Gas and Electric Company, "Final Safety Analysis Report," July 1985.

4. "Indian Point Probabilistic Safety Study," Power Authority of the State of New York and Consolidated Edison Company of New York, 1982.

5. "Oconee PRA," NSAC-60, June 1984.

6. A. C. Payne, Jr., "Interim Reliability Evaluation Program: Analysis of the Calvert Cliffs Unit 1 Nuclear Power Plant," NUREG/CR-3511/1 of 2, SAND83-2086/1 of 2, March 1984.

7. F. A. Heddleson, "Summary Report on a Survey of Light Water Reactor Safety Systems," Oak Ridge National Laboratory, NUREG/CR-2069, October 1981.

8. "Special Inspection Regarding Potential Overpressurization of ECCS," Memorandum by R. W. Starostecki, Director, Division of Reactor Projects, USNRC, Region I, April 2, 1985.

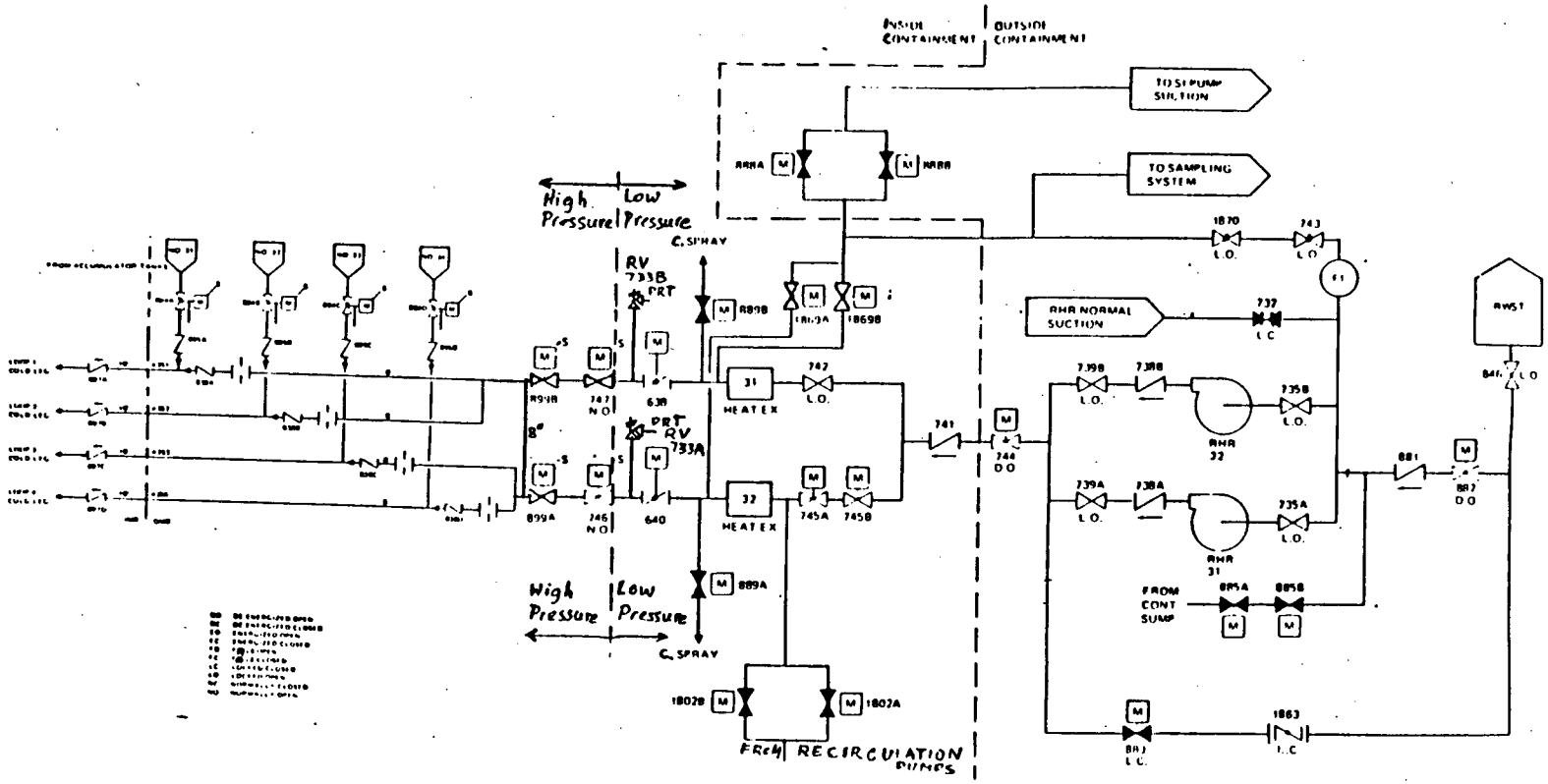

Figure 2.3.1 Low pressure injection lines, Indian Point 3.

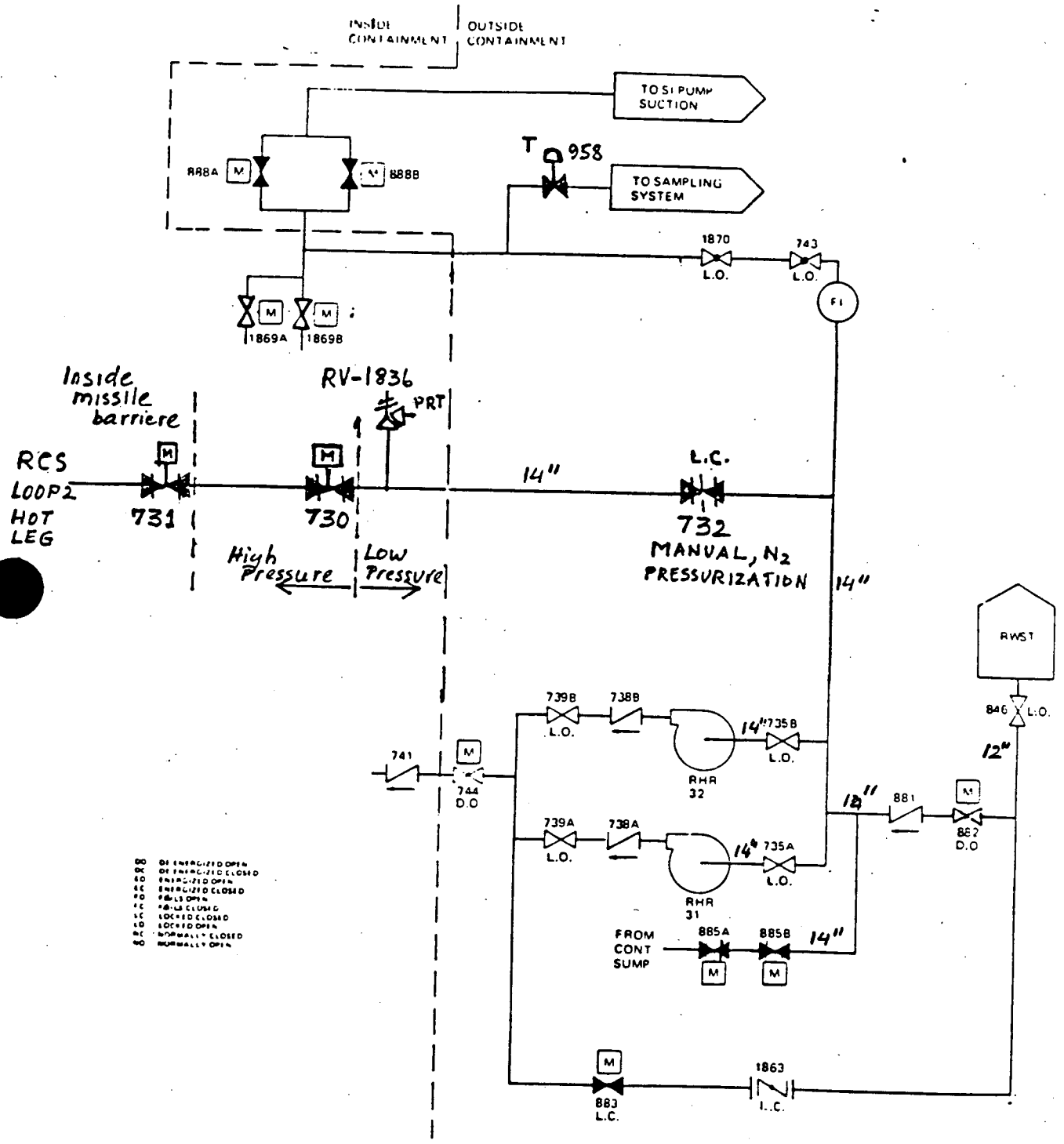

Figure 2.3.2 Residual heat removal suction line, Indian Point 3.

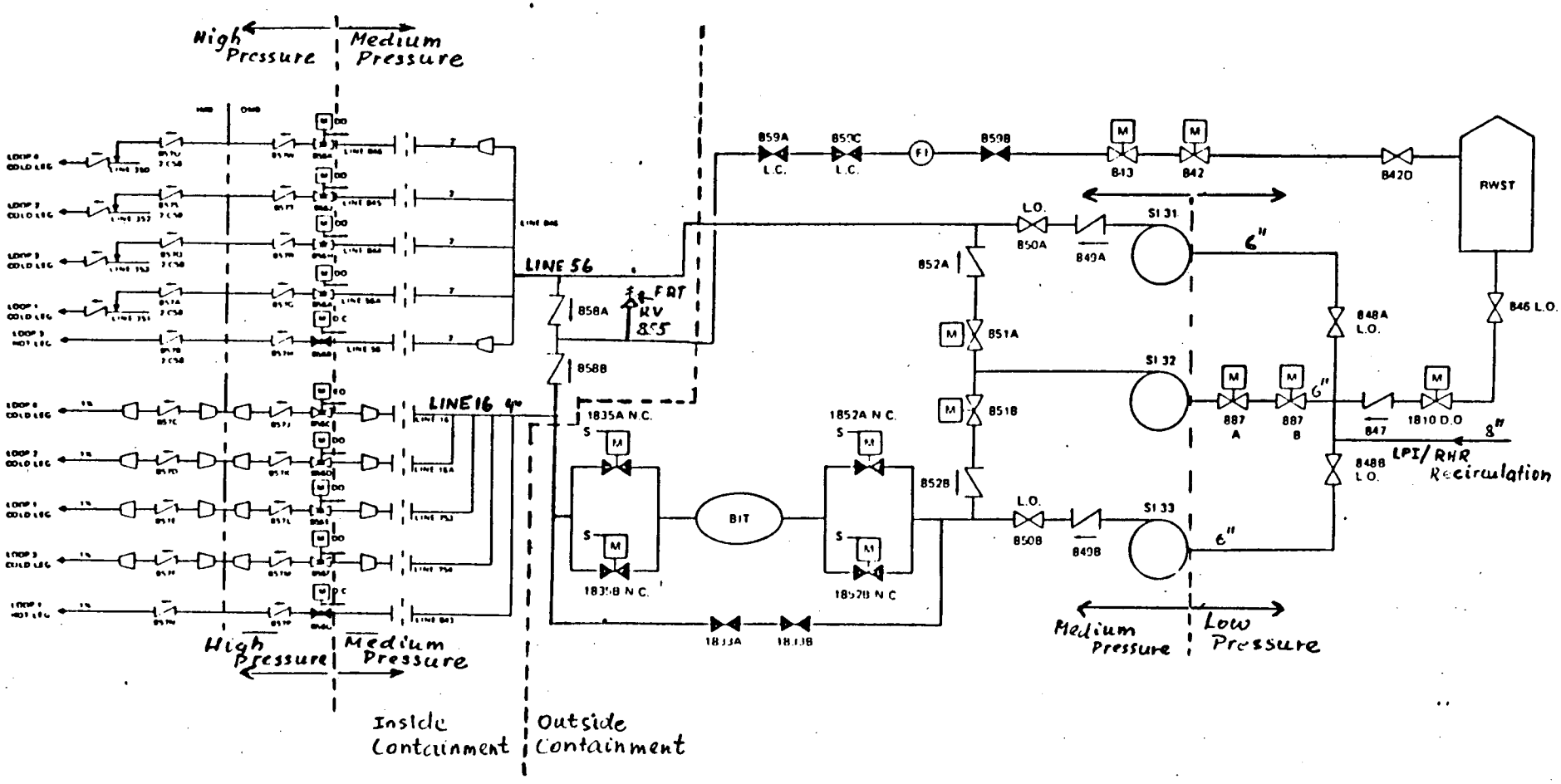

Figure 2.3.3 High pressure injection lines, Indian Point 3.

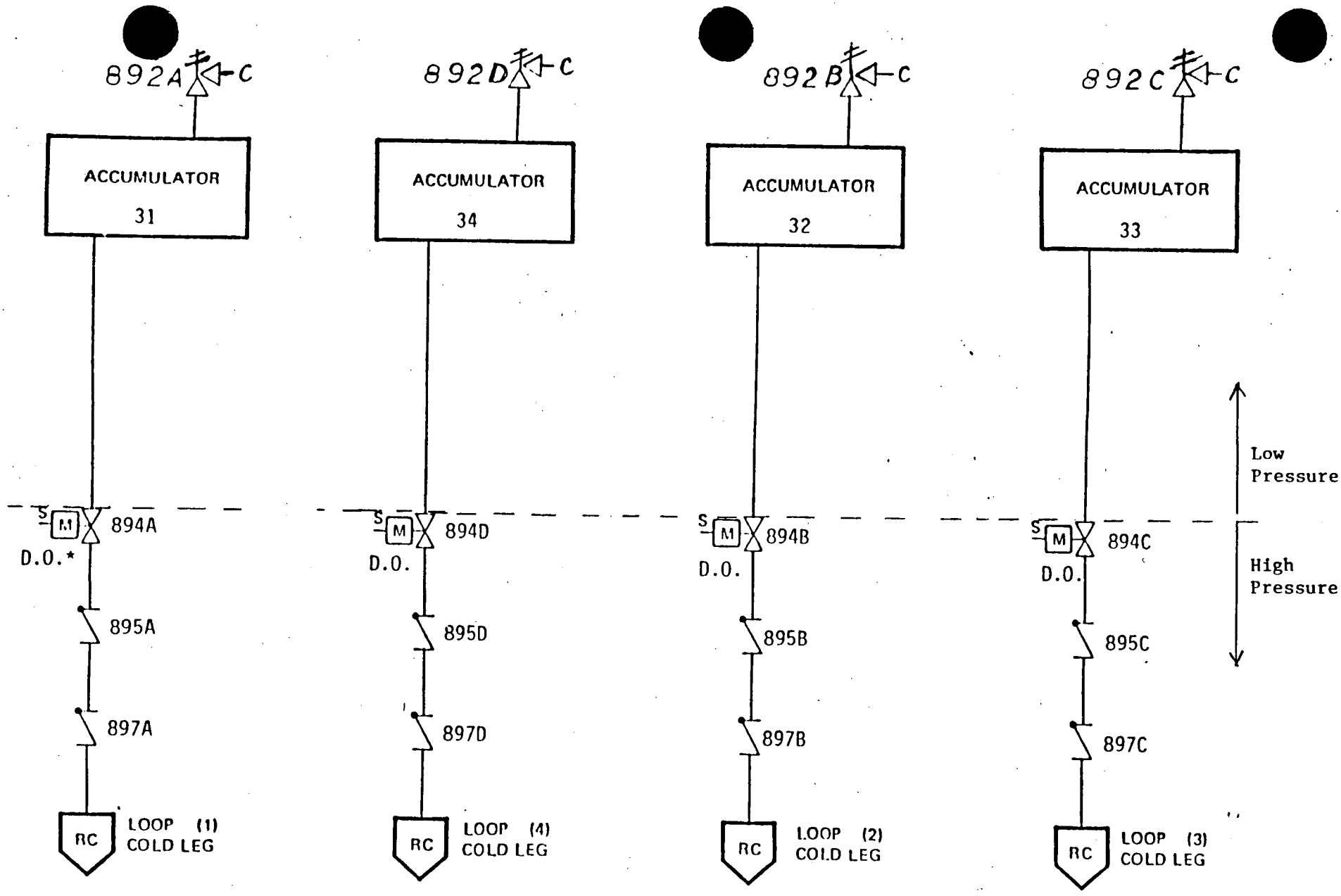

Figure 2.3.4 Core flooding tank (accumulator) outlet lines, Indian Point 3.

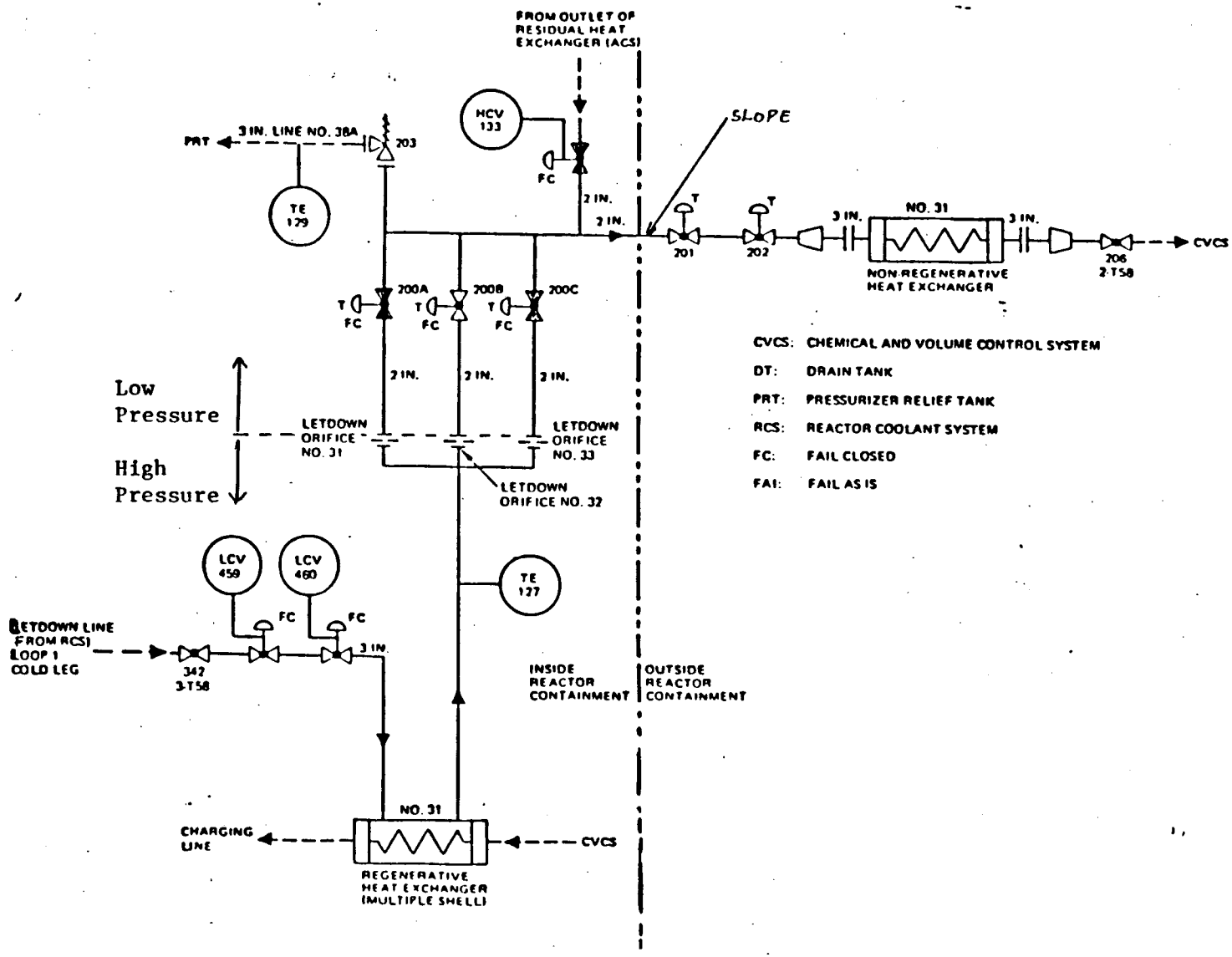

Figure 2.3.5 Letdown line, Indian Point 3.

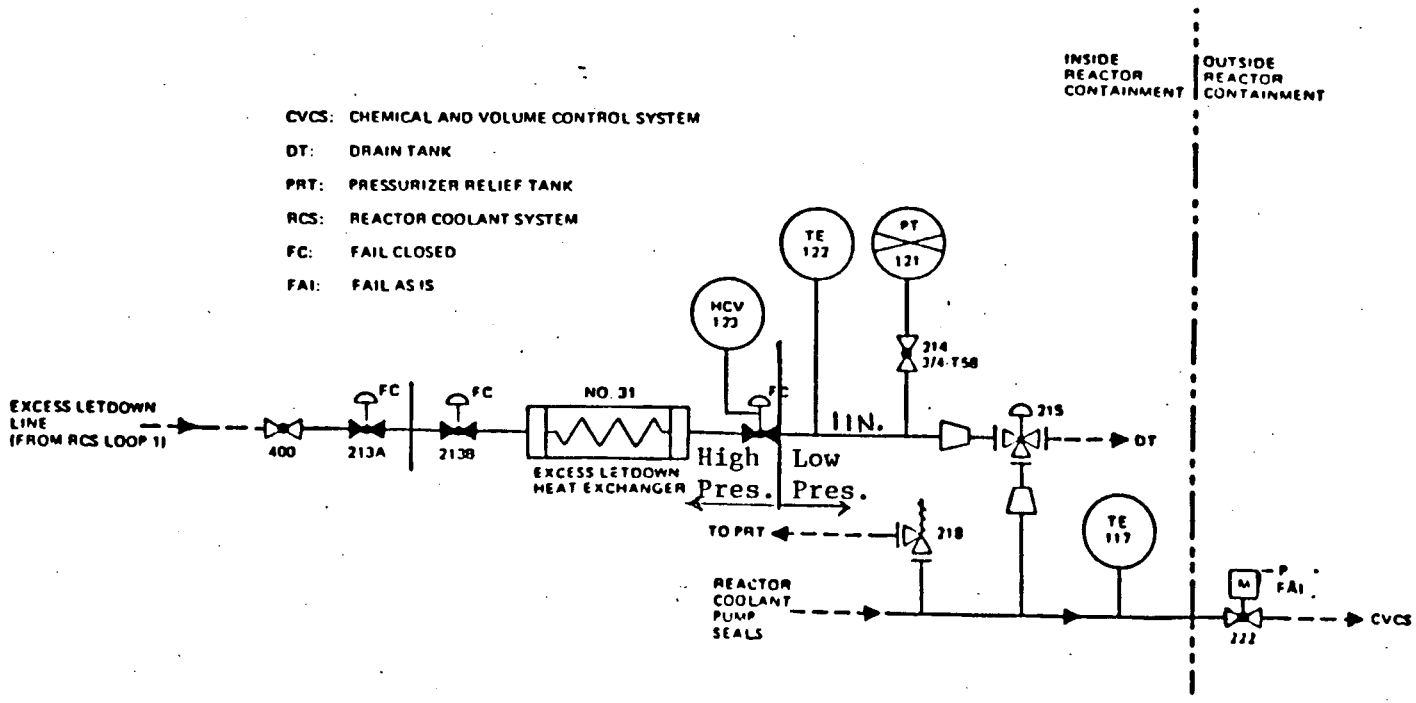

Figure 2.3.6 Excess letdown line, Indian Point 3.

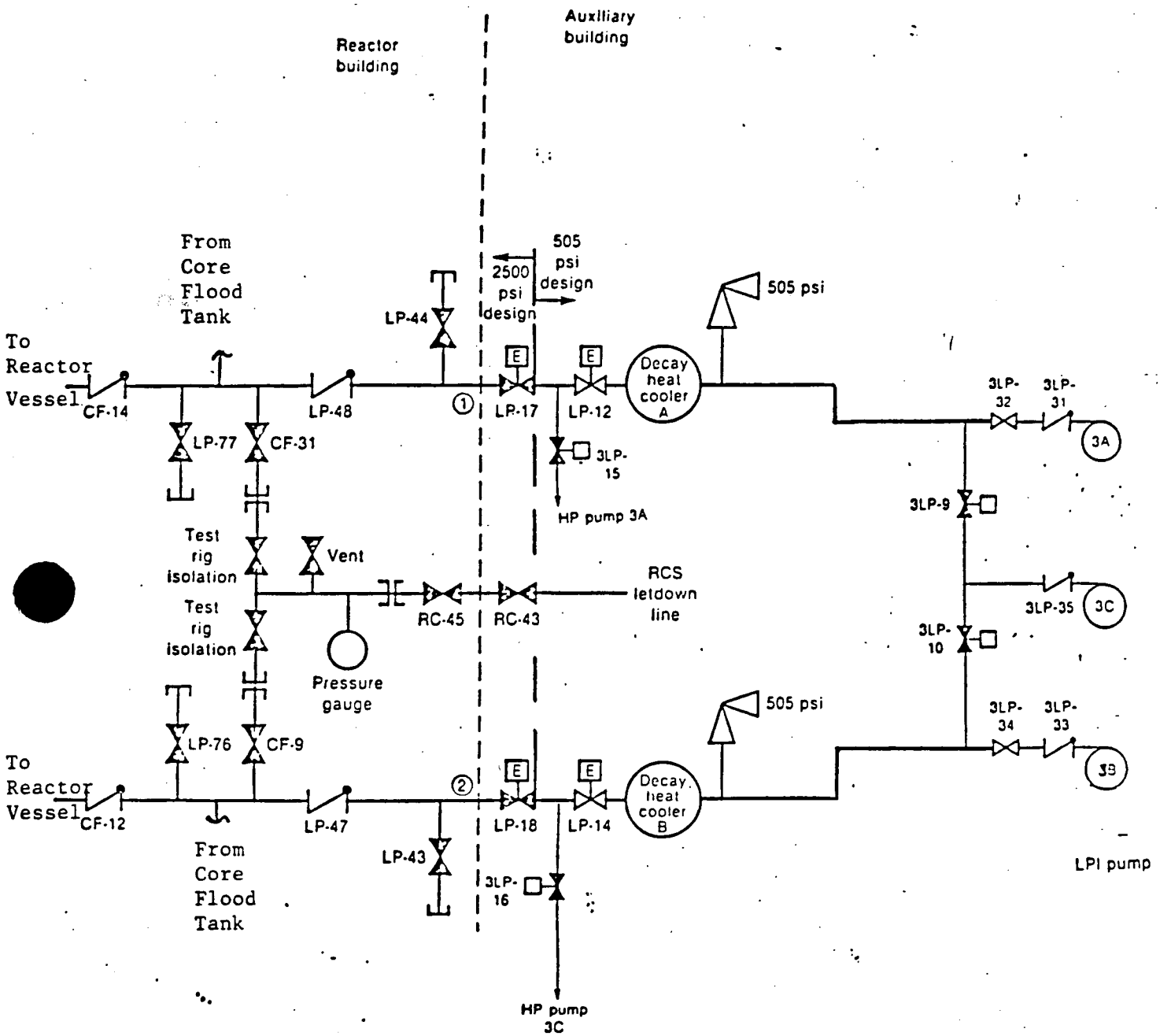

Figure 2.4.1 Low pressure injection lines, Oconee 3.

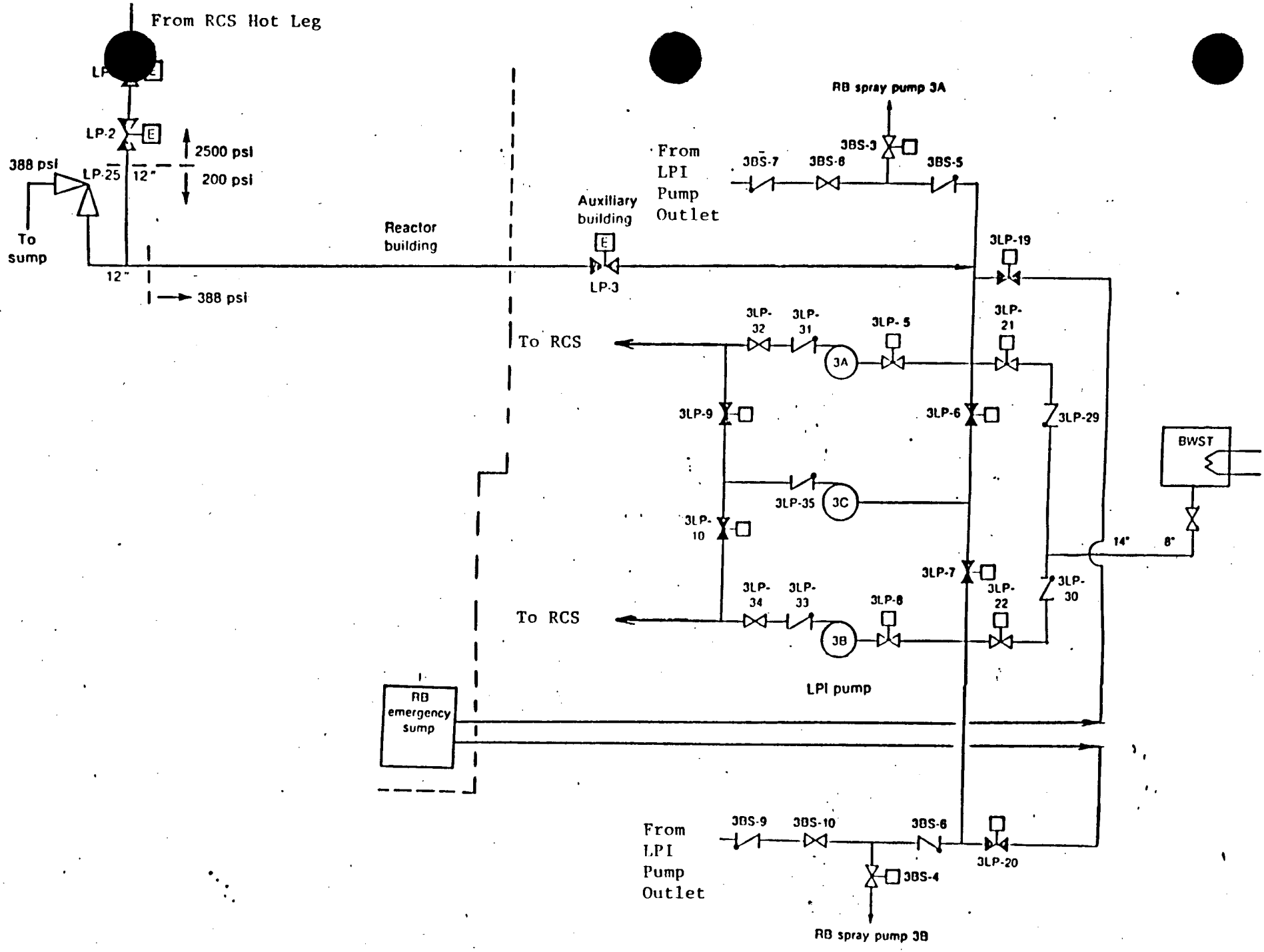

Figure 2.4.2 Decay heat removal suction line, Oconee 3.

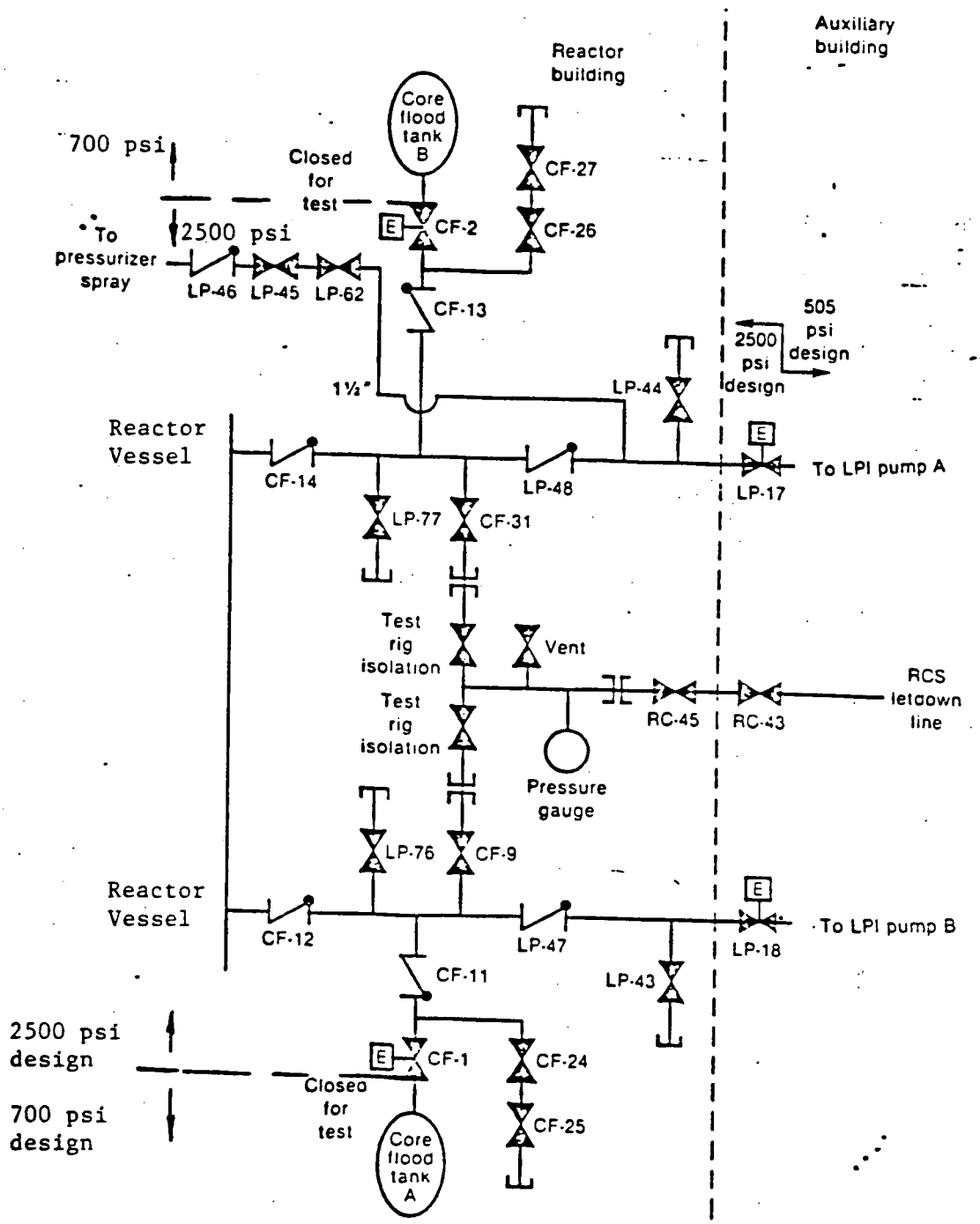

Figure 2.4.3 Core flooding system, Oconee 3.

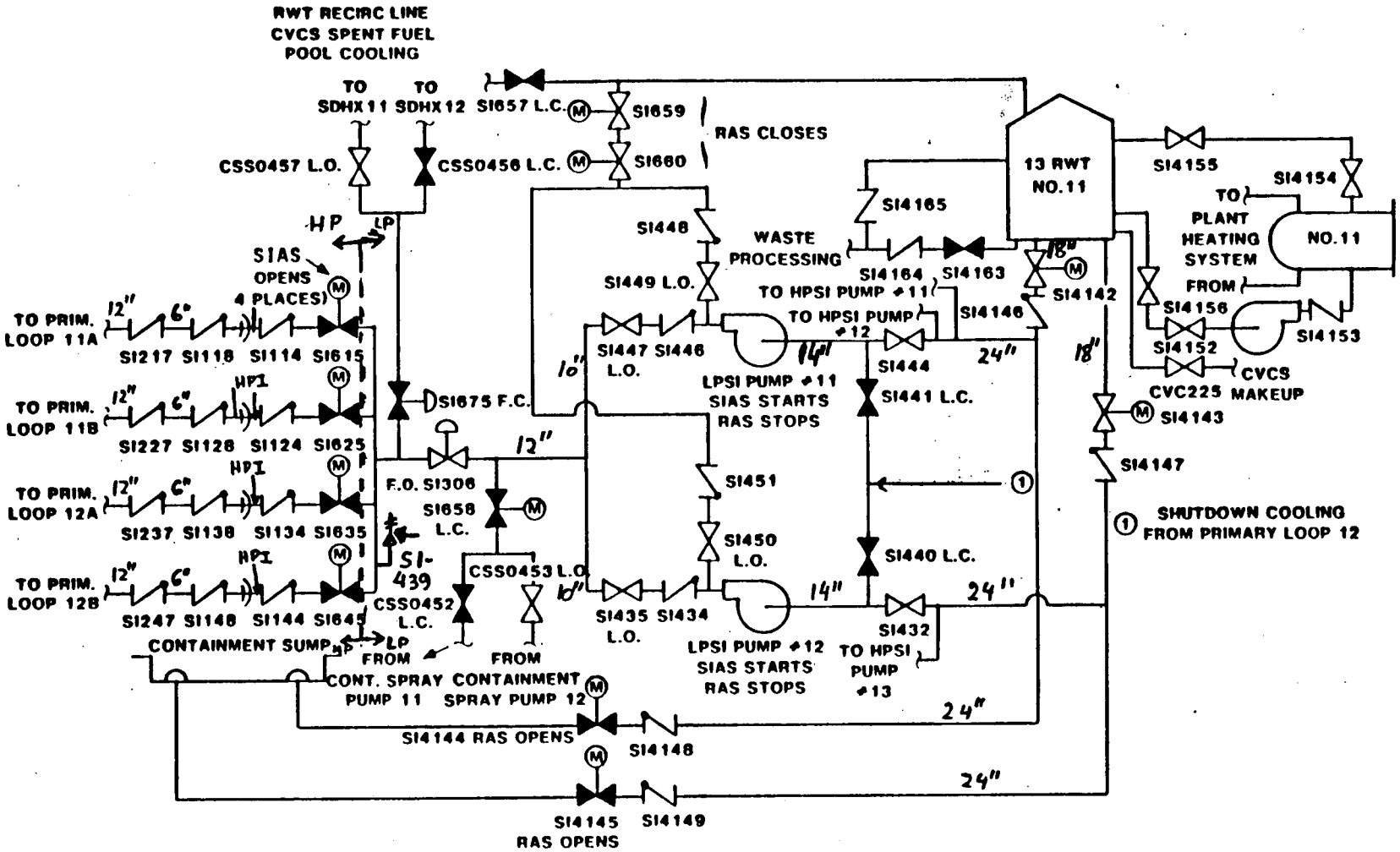

SIAS = Safety Injection Actuation Signal
RAS = Recirculation Actuation Signal
L.C. = Locked Closed
L.O. = Locked Open
FAI = Fails "as is"
HP = High Pressure
LP = Low Pressure

Figure 2.5.1 Low pressure injection lines, Calvert Cliffs 1.

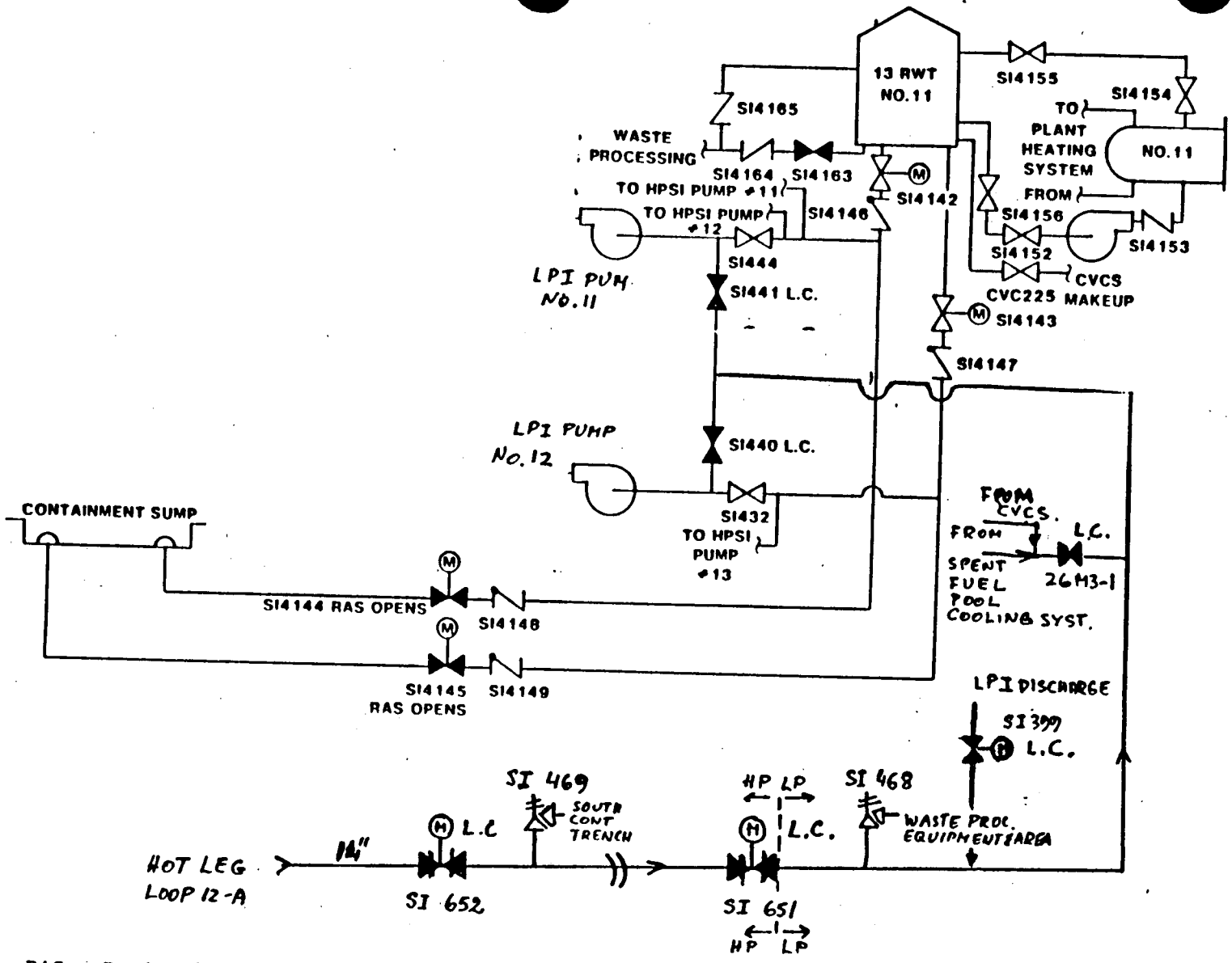

RAS = Recirculation Actuation Signal
L.C. = Locked Closed

HP = High Pressure
LP = Low Pressure

Figure 2.5.2 Residual heat removal (Cold Shutdown Cooling System) suction line, Calvert Cliffs 1.

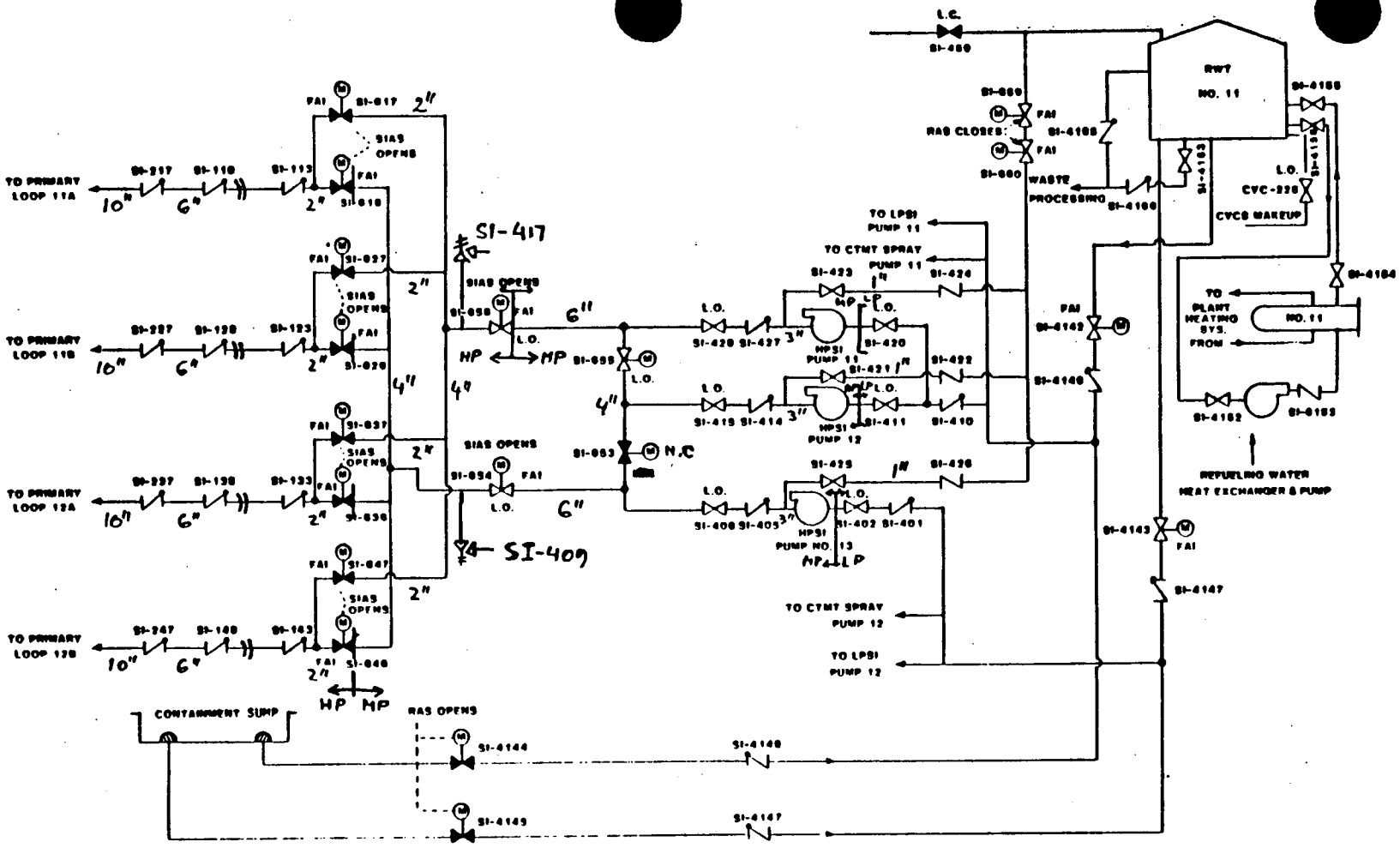

SIAS = Safety Injection Actuation Signal
RAS = Recirculation Actuation Signal
L.C. = Locked Closed
L.O. = Locked Open
HP = High Pressure
MP = Medium Pressure
LP = Low Pressure
FAI = Fails "as is"

Figure 2.5.3 High pressure injection lines, Calvert Cliffs 1.

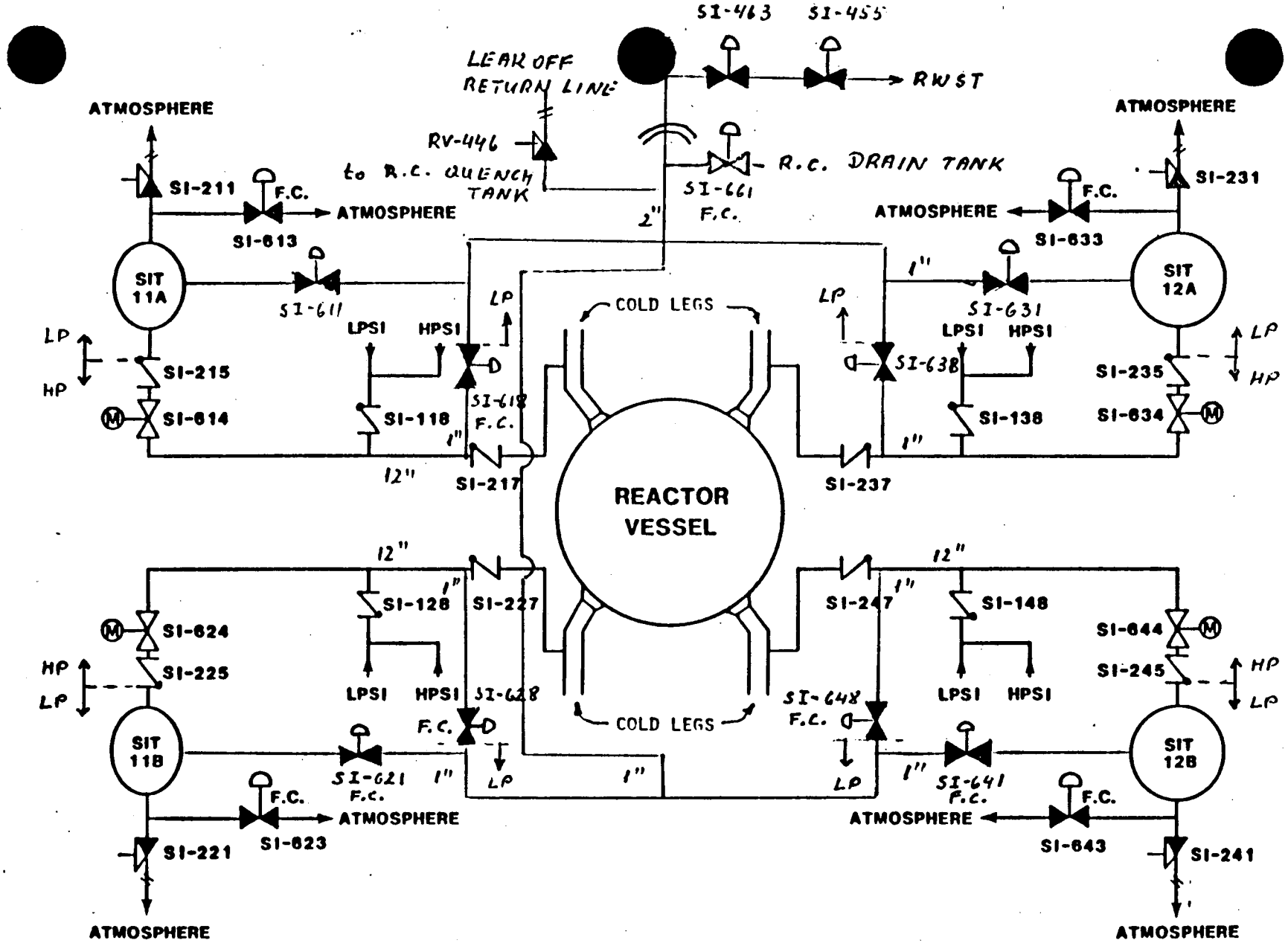

HP = High Pressure F.C. = Fails to Close HPSI = HPI
LP = Low Pressure LPSI = LPI

Figure 2.5.4 Core flooding tank (safety injecttion tanks) outlet lines, Calvert Cliffs 1.

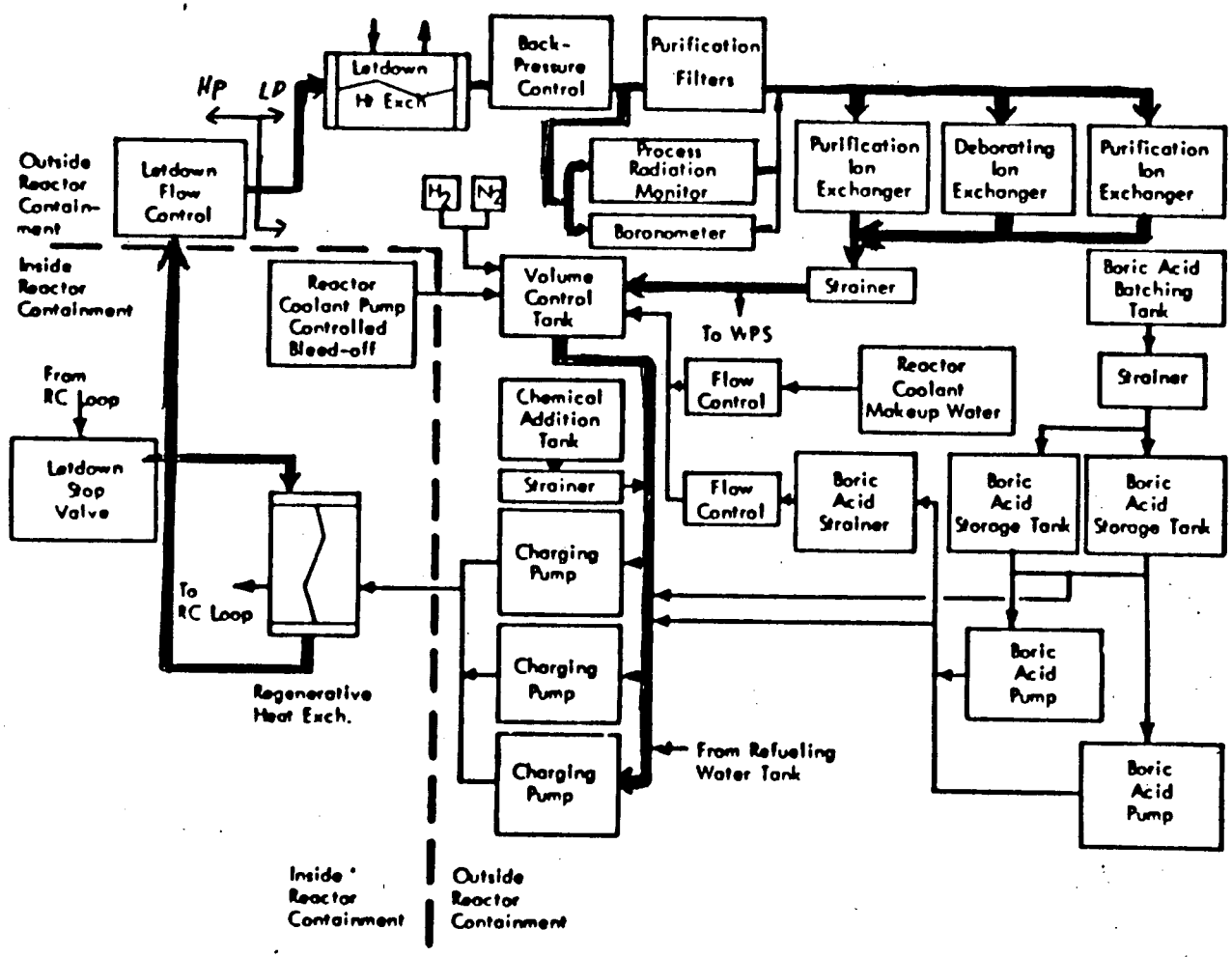

HP = High Pressure
LP = Low Pressure

Figure 2.5.5 Letdown line (highlighted on the flow schematic of the Chemical and Volume Control System), Calvert Cliffs 1.

Table 2.1
Characteristics of Selected PWRs

	Indian Point 3	Oconee 3	Calvert Cliffs 1
Reactor Vendor	Westinghouse	Babcock & Wilcox	Combustion Engineering
Design Power:			
(MWt)	3025	2568	2700
(MWe)	965	886	800
Architectural Engineer	WEDCO/United Engineers & Constructors	Bechtel Power Co. Duke Power Co.	Bechtel Power Co.
Commercial Operation	8/1976	12/1974	5/1975
Containment:			
Free Vol. (ft^3)	2.8×10^6	1.9×10^6	2.0×10^6
Design Pres. (psig)	47	59	65 (50)
Cavity Condition	Dry	Dry	Dry
Reactor Coolant System (RCS):			
Loops	4	2 Hot Legs 2 Parallel Cold Legs Per Loop	2 Hot Legs 2 Parallel Cold Legs Per Loop
Operating Pressure (psia)	2250	2185	2250
Low Pressure Injection System, Residual Heat Removal System (LPI/RHR):			
Pumps	2	2 (a third pump is available, it is normally valved out and is load shed)	2
Pump Location	Auxiliary Bldg.	Auxiliary Bldg.	Auxiliary Bldg.
Injection Location	Cold Legs, via Injection Lines Common With HPI, CFS	Vessel, via 2 Core Flooding Nozzles	Cold Legs, via Inlets Common With HPI, CFS
Recirculation, RHR HEXRs	2	2	2 (Part of Containment Spray System)
HEXR Location	Containment	Auxiliary Bldg.	Auxiliary Bldg.

Table 2.1 (Continued)

	Indian Point 3	Oconee 3	Calvert Cliffs 1
LPI Discharge Cross Connection	Yes	No	Yes
Containment Penetrations	2 (1 for recirculation)	2	4
LPI Injection	Upon RCS pressure below 450 psig	Upon RCS pressure below 500 psig	Upon RCS pressure below 600 psig
RHR Hot Leg Suction Line Containment Penetration	1	1	1
High Pressure Injection System (HPI):			
Pumps	3	3	3
Pump Location	Auxiliary Bldg.	Auxiliary Bldg.	Auxiliary Bldg.
Injection Location	Cold legs, via 4 separate and 4 common injection line with LPI, CSF. Also, 2 hot leg injection possibilities.	Cold Legs, via 4 injection line.	Cold Legs, via inlets common with LPI/CFS.
Containment Penetrations	2	2	4 (Those of LPI)
Actuation	Upon RCS Pressure of 1720 psig or containment pressure of 3 psig.	Upon RCS pressure of 1500 psig or containment pressure of 4 psig.	Upon RCS pressure below 1750 psig or containment pressure of 2.8 psig.
Core Flooding System (CFS):			
Tanks	4	2	4
Injection Location	Cold legs, via injection lines common with HPI/LPI.	2 Vessel nozzles common with LPI.	Cold legs, via inlets common with HPI/LPI.
Actuation	Upon RCS pressure below 650 psig.	Upon RCS pressure below 600 psig.	Upon RCS pressure below 200 psig.

Table 2.1 (Continued)

	Indian Point 3	Oconee 3	Calvert Cliffs 1
Chemical and Volume Control System (CVCS, Charging Mode) Charging Pumps	3 (Of three cylinder positive displacement type)	3 (HPI pumps servicing also for the Coolant Makeup System)	3 (Of three cylinder positive displacement type)
Maximum Makeup Flow Rate Independent of RCS Pressure	98 gpm	~100 gpm in CMS Mode	132 gpm
Containment Penetrations	2	2	2

Table 2.3.1
LPI (RHR) Injection Linest
Indian Point 3

Number of Lines	4		
Line Size	6"		
Valve Number	838A,B,C,D	MOV899A,B	MOV746,747
Valve Location	I	I	I
Type	Check	MO Gate	MO Gate
Operator	---	AC	AC
Normal Position	Closed	Open	Open
Power Failure Position	---	Open	Open
Automatic Signals	---	Opened on SI Signaltt	Opened on SI signaltt
Normal Flow Direction	In	In	In
Surveillance Requirement	*	**	**
Relief Valves	733A,B seat at LPI design pressure: 600 psig.		
Associated Pump Surveillance	Manually started monthly, flow tested at cold shutdown and refueling.		

†Information on check valves from the series 897 is given on Table 2.3.4.
††May be closed manually for isolation.
*Flow and leak tested at each RCS depressurization. Test for gross leakage at every refueling and midway between refuelings.
**Position verification weekly, stroke tested quarterly, flow tested (holding required position) at each shutdown and refueling.

Table 2.3.2
Residual Heat Removal Suction Line
Indian Point 3

Number of Lines	1		
Line Size	14"		
Valve Number	MOV-731	MOV-730	732
Valve Location	I	I	O
Type	MO Gate (special design)	MO Gate (special design)	Manual Block (double disk)
Operator	AC	AC	Manual, Locked Closed
Normal Position	Closed	Closed	Closed
Power Failure Position	Closed	Closed	---
Automatic Signals	RC pressure interlock†	RC pressure interlock†	---
Normal Flow Direction	Out	Out	Out
Surveillance Requirement	*	*	**
Relief Valves	1896 Setpoint: 600 psig.		
Associated Pump Surveillance	Manually started monthly, flow tested at cold shutdown and refueling.		

†RHR operation is not indicated.
*Disk integrity (leak) and stroke tests at each cold shutdown. Automatic isolation and interlock action test at each refueling. If not done during 18 months, the check will be performed during the next cold shutdown.
**Operability test through one complete cycle of full travel at each refueling.

Table 2.3.3
High Pressure Injection Lines
A. Branch Lines of Line 56†
Indian Point 3

Number of Lines	5			
Line Size	2"			
Valve Number	857A,B,G,H, Q,R,S,T,U,W	MOV-856J,H	MOV-856A,K	MOV-856B
Valve Location	I	I	I	I
Type	Check	MO Gate	MO Gate	MO Gate
Operator	---	AC	AC#	AC†††
Normal Position	Closed	Open	Open	Closed
Power Failure Position	---	Open	Open	Closed
Automatic Signals	---	Opened on SI signal	---	---
Normal Flow Direction	In	In	In	In
Surveillance Requirement	*	**	††	***
Relief Valves	RV-855, set at HPI design pressure, 1500 psig.			
Associated Pump Surveillance	HPI pumps started and run monthly, HPI system test at each refueling.			

†Information on check valves from the series 897 is given in Table 2.3.4
††Verify open quarterly.
†††Deenergized.
*Full stroke tested at each cold shutdown (RCS is drained). Leak tested at every refueling.
**Verify open quarterly, stroke at each cold shutdown.
***Verify closed quarterly, stroke at each cold shutdown.
#Motor operator disconnected.

Table 2.3.3 (Continued)
High Pressure Injection Lines
B. Branch Lines of Line 16
Indian Point 3

Number of Lines	5			
Line Size	To cold legs: 1.5", to hot leg: 2".			
Valve Number	857C,D,E,F,J K,L,M,N,P	MOV-856C,E	MOV-856D,F	MOV-856G
Valve Location	I	I	I	I
Type	Check	MO Gate	MO Gate	MO Gate
Operator	---	AC	AC#	ACttt
Normal Position	Closed	Open	Open	Closed
Power Failure Position	---	Open	Open	Closed
Automatic Signals	---	Opened on SI signal	---	---
Normal Flow Direction	In	In	In	In
Surveillance Requirement	*	**	tt	***
Relief Valves	See Table A.			
Associated Pump Surveillance	See Table A.			

*Partial stroke tested at each cold shutdown (RCS is drained). Leak tested at every refueling.
**Verify open quarterly, stroke at each cold shutdown.
***Verify closed quarterly, stroke at each cold shutdown.
ttVerify open quarterly.
tttDeenergized.
#Motor operator disconnected.

Table 2.3.4
Core Flooding Tank (Accumulator) Outlet Lines
Indian Point 3

Number of Lines	4		
Line Size	10"		
Valve Number	897A,B,C,D	895A,B,C,D	MOV-894A,B,C,D
Valve Location	I	I	I
Type	Check	Check	MO Gate
Operator	---	---	AC
Normal Position	Closed	Closed	Open
Power Failure Position	---	---	Open
Automatic Signals	---	---	Open safeguard actuation signal
Normal Flow Direction	In	In	In
Surveillance Requirement	*	*	**
Relief Valves	892A,B,C,D		

*Flow and leak tested at each RCS depressurization. Test for gross leakage at every refueling and midway between refuelings.
**Cycled and verify open every RCS depressurization. Tested open every refueling.

Table 2.3.5
Letdown Line
Indian Point 3

Number of Lines	1			
Line Size	2"			
Valve Number	LCV459	LCV460	200A,B,C	201,202
Valve Location	I	I	I	O
Type	Globe	Gate	Globe	Globe/ Solenoid
Operator	118V ac air	118V ac air	Air	118V ac
Normal Position	Open	Open	B open, A and C closed	Open
Power Failure Position	Closed	Closed	Closed	Closed
Automatic Signals	Close on low pressurizer level		---	*
Normal Flow Direction	Out	Out	Out	Out
Surveillance Requirement	Not yet identified			
Relief Valves	RV 203, setpoint at 600 psig.			

*Trip to close on containment isolation signal, phase A.

Table 2.3.6
Excess Letdown Line
Indian Point 3

Number of Lines	1	
Line Size	1"	
Valve Number	213A,B	HCV123
Valve Location	I	I
Type	Globe	Globe
Operator	Air 118V ac	Analog instrument, 118V ac
Normal Position	Closed	Open
Power Failure Position	Closed	Closed
Automatic Signals	---	---
Normal Flow Direction	Out	Out
Surveillance Requirement	Not yet identified	
Relief Valves	---	

Table 2.4.1
LPI Injection Lines
Oconee 3

Number of Lines	2		
Line Size	10"		
Valve Number	CF-12,14	LP-47,48	LP-18,17
Valve Location	I	I	O
Type	Check	Check	MOV
Normal Position	Closed	Closed	Closed
Power Failure Position	---	---	Closed
Automatic Signals	---	---	Low RCS Pressure High RB Pressure
Normal Flow Direction	In	In	In
Surveillance Requirement	*	*	**

*Leak tested after a cold shutdown, at least once every nine months.
**Stroke tested quarterly, at cold shutdown only.

Table 2.4.2
Decay Heat Removal Suction Line
Oconee 3

Number of Lines	1	
Line Size	12"	
Valve Number	LP-1,2	LP-3
Valve Location	I	O
Type	MOV	MOV
Normal Position	Closed	Closed
Power Failure Position	Closed	Closed
Automatic Signals	RC pressure interlock	---
Normal Flow Direction	Out	Out
Surveillance Requirement	Stroke Test*	Stroke Test**

*Once per cold shutdown.
**Once every three months.

Table 2.4.3
Core Flood Tank Outlet Line
Oconee 3

Number of Lines	2		
Line Size	14"		
Valve Number	CF-11,13	CF-12,14	CF-1,2
Valve Location	I	I	I
Type	Check	Check	MOV
Normal Position	Closed	Closed	Open
Power Failure Position	Closed	Closed	Open
Automatic Signals	---	---	---
Normal Flow Direction	---	---	---
Surveillance Requirement	*	*	**

*Leak test at cold shutdown.
**Stroke test simultaneously with check valve leak test.

Table 2.4.4
Auxiliary Spray Line
Oconee 3

Number of Lines	2	
Line Size	1 1/2"	
Valve Number	LP-45,62,63	LP-46
Valve Location	I	I
Type	Manual Gate	Check
Normal Position	Closed	Closed
Power Failure Position	---	---
Automatic Signals	---	---
Normal Flow Direction	In	In
Surveillance Requirement	*	*

*Not identified.

Table 2.4.5
Letdown Line
Oconee 3

Number of Lines	1	
Line Size	2 1/2"	
Valve Number	HP-3,4*	HP-5*
Valve Location	I	O
Type	MOV	AOV
Normal Position	Open	Open
Power Failure Position	As is	Open
Automatic Signals	SI	SI
Normal Flow Direction	Out	Out
Surveillance Requirement	**	**

*These are containment isolation valves. The pressure boundary is the pressure reducing flow orifice and the pipe schedule changes at valve HP-39.
**Local leak rate test during each shutdown.

Table 2.5.1
Low Pressure Injection Linest
Calvert Cliffs 1

Number of Lines	4		
Line Size	6"		
Valve Number	SI-118,128, 138,148	SI-114,124, 134,144	SI-615,625, 635,645
Valve Location	I	O	O
Type	Check***	Check	MO Gate
Normal Position	Open	Closed	Closed
Power Failure Position	---	---	As it is
Automatic Signals	---	---	Open on SI
Normal Flow Direction	In	In	In
Surveillance Requirement	**	*†	*
Relief Valves	SI-439, setpoint is 500 psig.		
Associated Pump Surveillance	Manually started monthly, flow tested at cold shutdown and refueling.		

†Information on check valves SI-217, 227, 237, 247 is given in Table 2.5.4.
*Verifying closed position at least once per month after cycling upon SI signal. Quarterly stroke (operability) test.
**Full flow and leak test during refueling outages (cold shutdown) (inboard checks).
*†Full flow test during refueling outages (cold shutdown), leak test quarterly during plant operation (outboard checks).
***These check valves are of weighted open types. They are normally open, but they will close if reverse flow exceeds 300 gpm.

Table 2.5.2
Residual Heat Removal (Shutdown Cooling System) Suction Line
Calvert Cliffs 1

Number of Lines	1	
Line Size	14"	
Valve Number	SI-650	SI-654
Valve Location	I	O
Type	MO Gate* (Special design)	MO Gate (Special design)
Normal Position	Closed	Closed
Power Failure Position	Closed	Closed
Automatic Signals	RCS pressure interlock†	RCS pressure interlock†
Normal Flow Direction	Out	Out
Surveillance Requirement	**	**
Relief Valves	SI-469, setpoint: 2485 psig, SI-468, setpoint: 315 psig	
Associated Pump Surveillance	See Table 2.5.1	

†RHR operation is not indicated.
*Continuous leak surveillance. Disk integrity (leak) and stroke tests at each refueling.
**Disk integrity (leak) and stroke tests at each refueling.

Table 2.5.3
High Pressure Injection Linest
Calvert Cliffs 1

Number of Lines	4 (per train)		
Line Size	2"		
Valve Number	SI-113,123, 133,143	SI-616,626, 636,646 (main header	SI-617,627,637, 647 (auxiliary header)
Valve Location	0	0	0
Type	Check	MO Gate	MO Gate
Operator	---	AC	AC
Normal Position	Closed	Closed	Closed
Power Failure Position	---	Fails as is	Fails as is
Automatic Signals	---	Open on SI	Open on SI
Normal Flow Direction	In	In	In
Surveillance Requirement	**	*	*
Relief Valves	SI-40-9, SI-417, setpoints @ 1485 and 2505 psig, respectively		
Associated Pump Surveillance	Manually started monthly, flow teted at cold shutdown and refueling.		

†Information on check valves: SI-217, etc. and SI-118, etc. is given in Table 2.5.4 and 2.5.1, respectively.
*Continuous position surveillance (alarm panel). Verifying closed position at least once per month after cycling upon SI signal. Quarterly stroke (operability) test.
**Leak test quarterly during plant operation (outboard checks). Full flow test during refueling outages (cold shutdown).

Table 2.5.4
Core Flooding Tank ("SIT") Outlet Lines
Calvert Cliffs 1

Number of Lines	4		
Line Size	12"		
Valve Number	SI-217,227, 237,247	SI-614,624, 634,644	SI-215,225,235 245
Valve Location	I	I	I
Type	Check	MO Gate (Globe)	Check
Operator	---	AC†	---
Normal Position	Closed	Open	Closed
Power Failure Position	---	Open	---
Automatic Signals	---	---	---
Normal Flow Direction	In	In	In
Surveillance Requirement	**	*	*†
Relief Valves	SI-211,221,231,241 setpoint: 250 psig, this is also the design pressure of the SITs.		

†Locked open, deenergized.
*Valve position in every 12 hours. Verifying open position within four hours prior increasing RCS pressure above 1750 psig.
**Valve seat leakage is monitored continuously. Full flow test during refueling outages (cold shutdown).
*†Full flow and reverse leakage test during refueling outages (cold shutdown).

Table 2.5.5
Letdown Line
Calvert Cliffs 1

Number of Lines	1			
Line Size	2"			
Valve Number	?	?	?	?
Valve Location	I	I	I	I
Type	Gate	Gate	Gate	Flow Check
Operator	Manual	Air/dc	Air/dc	ac
Normal Position	Open	Open	Open	Open
Power Failure Position	---	Closed	Closed	?
Automatic Signals	Pressure signals from the Auxiliary Building.			
Normal Flow Direction	Out	Out	Out	Out
Surveillance Requirement	Not yet identified.			
Relief Valves	Not yet identified.			

3. SURVEY OF OPERATING EXPERIENCE FOR ISL PRECURSOR EVENTS AT PWRs

3.1 Survey of Operational Events and Causes of Failures

Operating experiences regarding pressure boundary interfaces are embedded in various extensive data bases, which include events dating back to the 1970's. BNL has performed a search for ISL precursor event at PWRs by using the RECON[1] data base and the NPE operating events listing.[2] The available information mostly consist of LER submittals and in the NPE additional component engineering and failure reports are listed. The data bases have been systematically searched for isolation boundary component failures in systems connected to the RCS. All operational events involving pressure boundary isolation valves have been collected and reviewed.

Even though the actual configuration may vary greatly between systems, plants and vendors, the isolation boundary is generally consist of a number of check valves and/or motor-operated isolation valves, which may normally be closed or open depending on the particular design.

Based on this, the failure events can be classified as (a) failures involving isolation check valves, (b) motor-operated valve failures, and (c) procedural or management problems.

Both the check valves and the motor-operated valves may fail to perform their intended function in a variety of ways. However, the review of the operating events have indicated that there is a dominant failure mode for each class of isolation valve.

A. Check Valves - Leakage across the seat interface is the most typical failure mode for the check valves. Valve disk separation is a less frequent, but a much more serious mode of failure leading to a potential breakdown of the pressure boundary isolation function.

B. Motor-Operated Valves - The improper operation of the electrical control circuitry and additionally various problems with the limit and torque

switches seem to be the principle causes of failures for motor-operated valves.

In the following sections the collected operating events are discussed briefly and a more detailed description of some of the events are given in Appendix A.

3.1.1 Events Involving Isolation Check Valves

Reported operating events involving pressure boundary isolation check valve failures are listed in Table 3.1. The core flooding tank (accumulator)/RCS interface is the most frequently listed (18) with chronic leakage problems at some units (Palisades). The core flooding tank cannot easily be overpressurized by small back leakages from the RCS, since it is a relatively large reservoir of water capable of relieving pressure through relief valves and increasing water level in the tank (and dilution of boron concentration) can easily be detected allowing ample time to the operator to take the appropriate action. In one case, San Onofre 3, one motor-operated isolation valve leaked through and the backflow past the isolation check valve increased the water level above the alarm setpoint. The nitrogen blanket has become overpressurized lifting the safety relief valve releasing nitrogen gas to the containment atmosphere. As the pressure decreased the safety valve failed to reseat actually depressurizing the tank. The pressure inside the tank has never exceeded the design pressure and no ISL has occurred.

The remaining events have evenly occurred in the RHR (7) and HPI (7) systems. A large number of these events (5) has involved valve disk separation, a total loss of the pressure isolating function. However, none of these events led to actual overpressurization, because of additional pressure boundary barriers, i.e., check valves or closed motor-operated isolation valves.

It is important to note that a large number of these operating events (8) has been discovered during interfacing system LOCA test, which is designed to detect any deterioration of the pressure boundary isolation function.

In general, the multiple pressure boundary concept has functioned as designed, especially against single failure of the isolation boundary and as a result no actual overpressurization has occurred at PWRs. However, multiple, especially common cause failures cannot be ruled out (see BWR letter report)[3] and in one case, San Onofre 3, two isolation valves in series have actually leaked.

3.1.2 Events Involving Motor-Operated Isolation Valves

Reported operating events involving failures of motor-operated isolation valves are shown in Table 3.2. Only the fail-to-close failure mode has been included in this tabulation, since this mode would make an interfacing LOCA unisolable. There are numerous designs where the primary pressure boundary is a normally closed motor-operated valve. The non-mechanical failure of these valves (fail-to-open) would maintain the integrity of the pressure boundary and is not considered further. Most of these events have occurred in the HPI systems which are generally designed to have a number of normally open isolation valves. The major cause of failure involved either some component failure in the electrical control circuitry or the improper operation of the motor operator torque or limit switches. Mechanical failure (1) or leaking (2) did not seem to be a major problem, unlike with the isolation check valves.

3.1.3 Events Involving Procedural or Other Problems

The pressure boundary isolation function can be lost through mechanical and/or electrical failure of the isolating components. In addition, human errors or procedural, management problems can also lead to the deterioration or even loss of integrity of the pressure boundary. All events listed in Table 3.3 involve some form of human error or procedural deficiency, which may have caused or could have led to an ISL.

These events constitute a relatively small data base and no particular trend can be observed.

3.2 References

1. DOE/RECON, Nuclear Safety Information Center (NSIC), File 8, 1963 to present.

2. Nuclear Power Experience, NPE, Published by the S.M. Stoller Corp.

3. Interfacing Systems LOCA at BWRs - Draft Letter Report, L. Chu, S. Stoyanov, R. Fitzpatrick, May 1986.

Table 3.1
Summary of Operating Events
Isolation Check Valves

Plant	Date	System Involved	Description
Main Yankee	12/72	ACC	Leakage into SI tank. A small piece of weld slag had lodged under the seal of the outlet check valve allowing back leakage.
Turkey Point 4	5/73	HPI	One of the SI isolation check valves had leaked. The soft seat has failed.
Ginna	9/74	ACC	Leakage of primary coolant through a 10" swing check valve.
Robinson 2	1/76	ACC	Accumulator inleakage through leaking outlet check valve.
Zion 1	6/76	ACC	Accumulator inleakage of RC.
Surry 1	7/76	ACC	Two check valves in series were found to be back leaking to the accumulator.
Surry 2	8/76	ACC	Same as Unit 1 event.
Millstone 2	4/77	ACC	Inleakage of RC through outlet check valves.
San Onofre 1	5/78	LPI	Check valve disk failed to close.
Calvert Cliffs 2	9/78	ACC	SI tank outlet check valves back leaked.
Sequoyah 1	9/80	HPI	SI check valve was found to be stuck open. Interference between the disk nut lockwire tack weld and valve body.
Davis-Besse 1	11/80	RHR	Excessive leakage through RHR/RCS isolation check valve. Valve disk and arm had separated from the valve body. Bolts and locking mechanism were missing. 14" swing check valve manufactured by Velan.
Salem 1	12/80	HPI	SI check valve failed to close during a test. Interface between RCS hot leg and the SI pumps. Valve was found to be locked open. Boron solidification in the valve during refueling outage is the probable cause of failure.

Table 3.1 (Continued)

Plant	Date	System Involved	Description
Surry 2	1/81	ACC	Accumulator outlet check valve leaked through diluting boron concentration in the tank. Flushing system improperly set up resulting in charging system pressure to exist on the downstream side.
Oconee 1	2/81	RHR	Reactor vessel/LPI loop isolation check valve excessively leaked. The valve disc had become frozen at the pivot. Buildup of deposits in the gap between the hinge and disc knob caused the freezing.
Oconee 3 LER 81-015	3/81	RHR	Similar to event at Unit 1.
Palisades	3/81	ACC	Apparent leakage of RCS water into the SI tank.
McGuire 1 LER 81-070	4/81	ACC	Accumulator outlet check valves were leaking allowing RCS water to fill accumulator above alarm setpoint.
Point Beach 1	7/81	RHR	RCS/LPI isolation check valves leaked excessively. The valve discs were found to be stuck in the full open position.
Palisades	9/81	RHR	The boundary check valves between the LPSI/HPSI system had excessive wear. The valve disc sealing surfaces were damaged.
Point Beach 1	10/81	RHR	RCS/LPI isolation check valve leaks in excess of acceptance criteria. The affected line and valve was flushed eliminating leakage.
Cook 2	11/81	HPI	SI check valve was found to have excessive seat leakage. The valve disc has been missing due to installation error.
Calvert Cliffs 1 LER 82-033	7/82	ACC	Accumulator tank outlet check valve leaked due to deterioration of the disc sealing o-ring. The o-ring material has been changed.
Surry 2 LER-82-058	9/82	ACC	Accumulator outlet check valve leaked RCS water into the tank during a pipe flush.

Table 3.1 (Continued)

Plant	Date	System Involved	Description
ANO-2	10/82	HPI	SI check valve stuck in the open position during test.
Maine Yankee	2/83	HPI	SI check valve seal weld leak. The cause of the failure appeared to be an inadequate application of welding and grinding techniques to seal the shaft bearing cover after maintenance work.
San Onofre 3 LER 83-017	2/83	ACC	SI tank volume and pressure increased due to leakage past the HPSI header isolation valve and backflow through the outlet check valve. Tank relief valve lifted and failed to reseat.
McGuire LER 83-029	5/83	ACC	RCS water inleakage through outlet check valves into accumulator.
Farley 2	9/83	HPI	SI check valve was excessively leaking. Incomplete contact between the valve disk and seat.
Oconee 1 LER 84-001	3/84	ACC	Accumulator inleakage through leaking valves.
Palisades LER 84-012	7/84	HPI	RCS leakage into SI lines past loop check valves. The valves were flushed to facilitate improved seating.
Palisades* LER 85-007	6/85	ACC	Accumulator inleakage past isolation loop check valve.
Palisades* LER 85-024	11/85	ACC	Similar to previous event.

*The Palisades unit had a chronic inleakage problem in the accumulator system indicated by numerous LER's (not shown).

Table 3.2
Summary of Operating Events
Motor-Operated Isolation Valves

Plant	Date	System Involved	Description
Turkey Point	6/72	RHR	RHR suction valve had cracks in the valve lower retainer. The retainer cracked due to over travel, operational control improperly designed.
Robinson 2	/73	RHR	RHR pump suction valve from RCS had leaked due to seat wear.
Oconee 1 Docket 50-269	1/74	LPI/RHR	LPI containment isolation valve failed to close. A control power fuse blew.
Cook 1	8/75	LPI/RHR	LPI discharge isolation valve could not be closed. Misaligned electrical switch.
Trojan Docket 50-344	2/76	ACC	The accumulator outlet isolation valves reopened after the operator closed them. There was a design error in the control wiring.
Calvert Cliffs 1 LER 76-8/3L	5/76	HPI	HPI loop isolation valve failed to operate. A control circuit fuse had blown.
Crystal River 3 LER 78-006	2/78	HPI	HPI isolation valve inadvertently opened and tagged out of service.
ANO 2 Docket 50-368	4/78	HPI	HPI header isolation valve failed due to flow conditions and check valve failure.
Davis Besse 1 LER 79-015	1/79	ACC	Core flooding tank isolation valve failed to close remotely. Mechanical component failure.
Davis Besse 1 LER 79-036	3/79	HPI	HPI isolation valve inadvertently opened due to electrical component failure in the control logic circuitry.
North Anna 1	4/79	RHR	RHR isolation valve failed to close automatically. Misaligned limit switch contact.
Cook 1	10/79	LPI/RHR	RHR discharge isolation valve failed to close. Valve operator torque switch failed due to condensation.
Robinson 2 LER 80-029	12/80	RHR	RHR pump suction isolation valve from RCS hot leg leaked through due to normal wear.

Table 3.2 (Continued)

Plant	Date	System Involved	Description
Millstone 2 LER 82-004	1/82	RHR	The pressure interlock setpoint for the RHR suction valve was set above the limits. Pressure transmitter had electrical problems.
Yankee Rowe LER 82-022	7/82	ACC	Accumulator isolation valve failed to operate. Motor operator was disabled due to grounding conditions.
Millstone 2 LER 82-037	9/82	RHR	RHR isolation valve would not close. Torque switch was found to be out of adjustment.
San Onofre 3	2/83	HPI/ACC	HPI isolation valve leaked through. Accumulator level increased.
Main Yankee LER 83-016	5/83	HPI	HPI isolation valve failed to close. Excessive tightening due to limit switch misadjustment.

Table 3.3
Summary of Operating Events
Procedural or Other Problems Involving Isolation Valves

Plant	Date	System Involved	Description
Crystal River 3 LER 78-006	2/78	HPI	HPI isolation valve was inadvertently opened and tagged out of service. Technicians cleared the wrong breaker.
Sequoyah 1 LER 81-099	7/81	RHR	RHR check valves were not tested within the required time period.
Salem 1 LER 83-005	1/83	RHR	The RHR automatic isolation function had not been tested prior to placing the RHR in operation.
Davis-Besse 1	1/83	RHR	Pressure interlock for RHR suction valve (from RCS hot leg) was bypassed. Operator error and design deficiency.
Oconee 1 LER 84-001	3/84	ACC	Accumulator inleakage through leaking valves. Administrative deficiency no management control over a known problem.

APPENDIX A: Description of Representative Operating Events Involving Pressure Boundary Isolation Failure

In this appendix, some of the previously listed and briefly discussed operating events (Chapter 3) are discussed in more detail.

A.1 Events Involving Isolation Check Valves

A.1.1 Oconee 1 and 3 (LER 81-015)

A check valve (14" Crane, steel, swing check valve) in the LPI system was found to be leaking excessively during the performance of a LOCA leak test. The leaking valve was the final valve in the LPI loop before reaching the reactor vessel. The valve disc had a cylindrical knob on its back which was inserted through a hole in the hinge arm and then had a retainer ring welded onto it to hold in the hinge arm. By pivoting, the disc was allowed to find its seat properly should the mating surfaces become slightly altered. A manufactured tolerance of 3 to 11 mil between the disc knob and the hinge at the pivot prevented the disc from swaying too freely. Examination of the valve disc-hinge assembly showed that the disc had become frozen at the pivot in a cocked position. Consequently, only ~1/2 of the disc was seating. The "freezing" of the disc at the pivot was apparently caused by a buildup of deposits in the gap between the hinge and the disc "knob" on the side of the knob closest to the hinge pin. While there was flow through the valve, the disc was normally in a cocked position, and it was postulated that the flow could carry deposits into the pivot gap area, where they could accumulate. The accumulation of deposit could then cause the disc to remain slightly cocked when the flow was stopped. During examination of the valve disc, the retaining ring was removed and unsuccessful attempts were made to remove the disc from the hinge. Both the hinge and disc were made of the same type of SS and under the high temperature of unit operation, some galling could have occurred. At that time, the disc was still connected to the hinge.

Prior to the testing, two backup check valve had been leak tested and both had shown zero leakage. This valve was the 1st valve, out of a total of 18 of the same type of valve leak tested at Oconee, which had shown any

leakage problem. Another check valve of the same type was found to be leaking on Unit 3.

The unit was returned to cold shutdown so that the valve could be repaired. The valve seat was lapped and the internals (disc, hinge, and hinge pin) were replaced with new parts. The valve was then retested and there was zero leakage by the seat. An analysis was to be performed on the substance in the pivot gap of the valve to determine its origin. Extreme contamination of the internals, however, had made examination of these parts undesirable at that time with respect to personnel exposure. At Unit 3 a spectrum analysis was performed on the deposits from the pivot and they were determined to be from the RCS.

A.1.2 Palisades

On 9 September, during modification of the LPSI system piping to add leak testing capability, excessive wear to the valve internals was discovered in the LPSI swing check valves. The disk nut, disk nut washer and the disk nut pin were missing and severe wear was observed on the valve body, clapper arm, disk clapper arm shaft and clapper arm support for two (CK 3100 and 3148) of the four LPSI valves. The disks were still attached to their clapper arms and the valves were operational; however, valve set and disk sealing surfaces were damaged and the valves could have been leaking. An NRC order dated April 20, 1981 involved check valves that formed the interface between an HP system connected to the RCS and an LP system whose piping went outside containment. CK 3133 and 3148 formed the boundary between the LPSI and HPSI systems and failure of the valves could have resulted in overpressurization of the LPSI system and the loss of some HPSI flow. The inspection of the valves was the first in ~10 years of operation. It was subsequently discovered that the remaining two valves had also failed in a similar fashion. The LPSI check valves were manufactured by Alloy Steel Products Company (ALOYCO) in 1968. They were six inch swing type check valves with weld ends for attachment to piping. All four valves were mounted vertically with flow directed upward.

The valves were of an in-line configuration with a ballooned or expanded area in the valve body for movement of the flapper-type (see Figure A.1). The

disk was substantially larger than the pipe and if the disk had separated from the clapper arm, it would have been trapped within the expanded portion of the valve body.

Operation of the valve resulted in the threaded shaft on the back of the valve disk striking the valve body as it opened to the full flow position. The valve body was the ultimate limit for disk opening. In full flow operation, it was presumed the disk generated sufficient turbulence to cause chatter against the valve body. Where these valves were used for extended periods of operation, they exhibited about a 1/2" of wear (above the disk nut) of the threaded portion of the disk shaft. Although the disk nuts had been worn away, none of the disks had separated from their clapper arm because of the peening action on the shaft.

The design of ALOYCO swing check valves was such that the threaded shaft acted as the striking surface to limit clapper travel. This design was not used universally by other manufacturers. In other valve designs, the possibility of the threaded shaft acting as the striking surface had been eliminated by providing an alternate raised surface on the valve disk to contact the valve body.

A.1.3 Arkansas One 2

On 18 October, SI check valve (Velan) 2SI-12C stuck in the open position when stroked by hand. The hand stroking operation was initiated as a result of recommendations of IE Notice 81-30. The hand stroking operation was performed when the bonnet was removed during maintenance activities. The three counterpart valves (2SI-13A, 2-SI-13B, and 2SI-13D) were inspected and hand stroked. Valve 2SI-13B also stuck when hand stroked. These valves were the first of two check valves between the HPSI header shutoff valve and the injection nozzles. Investigation revealed that the valve disc stud for 2SI-13C protruded far enough above the disc nut to interfere with the body and hold the disc assembly in the open position. The vendor drawing showed the disc stud to be flush with the top of the disc out. The portion of the disc stud that protruded above the nut was filed off leaving the top for the stud flush with the top of the disc nut. Valve 2SI-13B stuck because the disc was

misaligned and allowed the disc to stick against the side of the body. The interference resulted from the bushings being improperly positioned. The bushings were repositioned so the valve functioned properly with no sticking throughout its full stroke.

A.1.4 Point Beach 1 (LER 81-010)

On July 31, 1981, Wisconsin Electric Power Company reported (LER 81-010/01T-0) that on July 14, 1981, while a check valve leakage test at the Point Beach Nuclear Plant, Unit 1, was being performed, the check valves closest to the reactor coolant system in the low head safety injection lines were found to be leaking more than allowed by the leakage acceptance criteria. The valves are Velan six inch 1500 psig ASA swing check valves (Velan Drawing No.78704).

The valves were disassembled and the disks were found to be stuck in the full-open position due to interference between the disk nut lockwire (disk wire) and the valve body. The disk nut and its shaft can rotate freely, and, in certain random rotational positions, this interference is likely to occur.

The licensee has replaced the disk wire with a cotter pin that will not cause interference with the valve body for any rotational position. Subsequent inspection of the other check valves in the low head safety injection lines was performed. These valves were found to be closed. The lock wires were nevertheless replaced with cotter pins.

A.1.5 Davis-Besse Unit 1

On October 9, 1980, the resident inspector at the Davis-Besse facility was informed that the licensee had performed leak rate tests and identified excessive leakage through Decay Heat Removal System check valve CF-30. Valve CF-30 is the inboard one of two in series check valve that is used to isolate the reactor coolant system from the low pressure decay heat removal system. On further investigation the licensee found that the valve disc and arm had separated from the valve body and was lodged just under the valve cover plate. The two 2-5/8" x 5/8" bolts and locking mechanism for the bolts that

holds the arm to the valve body were missing and have not been located. The CF-30 valve is a 14" swing check valve manufactured by Velan Valve Corporation. The cause of the failure has not been identified.

A.1.6 Main Yankee

Following power escalation testing the reactor was tripped and the plant cooled to 400°F for investigation of noted leakage into SI Tank No. 1. Samples taken from this tank were analyzed and the boron concentration found to be 1700 ppm (limit is 1720).

All SI Tanks (SIT) were filled and sampled ~7 weeks earlier and initial physics testing initiated. At this time all tanks were at 1750 ppm. These tests were followed by the Power Escalation Tests. About 2 1/2 weeks earlier, while performing these tests, inleakage to SIT No. 1 was noted. The noted leakage into SIT No. 1 was drained periodically. As the boron concentration in the RCS and therefore the charging system averaged ~800 ppm, any inleakage decreased by a small amount the boron concentration in SIT No. 1.

Following the cooldown the soft seat check valve between SIT No. 1 and the high pressure SI header was opened for inspection. A small piece of weld slag had lodged under the seat of the check valve allowing back leakage into SIT No. 1 from the high pressure SI header. The slag was removed, the seat and disk were smoothed and the "o" ring seal on the disk replaced. The valve was reassembled and tested satisfactorily.

A.2 Events Involving Motor-Operated Isolation Valves

A.2.1 Davis-Besse 1

Davis-Besse 1 - January 1979 - Hot Standby

During a shutdown on 17 January they attempted to close the Core Flood (CF) Tank 1-2 Isolation Valve CF1A using the Limitorque motor operator. The valve could not be closed with the motor operator and was manually closed. During investigation of the failure, it was determined that during a unit

startup in December 1978, valve CF1A would not open using the motor operator and had been manually opened. The valve was manually opened prior to RCS pressure exceeding 800 psig on 29 December 1978 as required by the Tech. Specs.

The CF Tanks Isolation Valves are opened the entire time RCS pressure is >800 psig, and the power removed from the motor operators to prevent an inadvertent closure from rendering the CF Tank inoperable. Whenever RCS pressure is <700 psig, the isolation valves are closed, and the power removed from the motor operators to prevent inadvertently opening the valve and discharging from the CF Tank.

The apparent cause of the failure of the motor operator for CF1A was a fabrication error. The motor operator of CF1A was found to have a cracked motor pinion gear. This was a small gear on the end of the motor shaft which supplied the initial torque to the operator. The set screw which held the gear to the shaft came loose. This allowed the key which kept the gear rotating with the shaft to travel downward and catch on the casting of the housing. This in turn bent the key and caused the gear to crack. The crack in the gear then permitted the key to fall completely out and prohibited the pinion gear from turning with the motor shaft. This caused the operator to be inoperative in either direction. The pinion gear and the associated key were replaced.

A.3 Events Involving Other Problems

A.3.1 Davis-Besse 1

The plant was in the process of a normal cooldown in accordance with the plant shutdown and cooldown procedure. As a part of the procedure, the decay heat suction isolation valves, DH11 and DH12, were required to be opened just prior to entering Mode 4 (hot shutdown). Pressure switch PSH-RC2B4 was required to close its contacts at 266 psig decreasing to allow DH12 to be opened. The switch functioned properly to open at 266 psig increasing to prevent opening DH12; however, the deadband in the switch prevented the switch from resetting within the pressure band required for simultaneous decay heat

pump and RCP operation. A Facility Change Request (FCR) had been implemented to correct problems with this pressure switch and its deadband; however, the FCR changes did not correct the problems with PSH-RC2B4. Therefore, each time DH12 was required to be opened, a jumper was installed per plant procedure to defeat PSH-RC2B4 thereby allowing the valve to be opened.

On 23 August 1982, during a plant cooldown, the shift supervisor had the jumper installed to open DH12. The cooldown procedure required that the jumper be removed after DH12 was opened. The shift supervisor stated that he had called the electrical shop to remove the jumper; however, the jumper was never removed. The unit was returned to service and in operation until a plant shutdown on 18 January 1983. During the subsequent cooldown on 19 January, it was discovered that the jumper for PSH-RC2B4, installed on 23 August 1982, was still in place. DH12 was opened, the jumper removed as required by procedure and the cooldown continued.

It was determined that the cause for the event were two-fold. First, the shift supervisor did not verify that the jumper had been removed which was considered a lack of proper administrative control in following written procedures. The second cause was considered to be design error because had the pressure switch reset properly there would have been no need for the jumper to be installed.

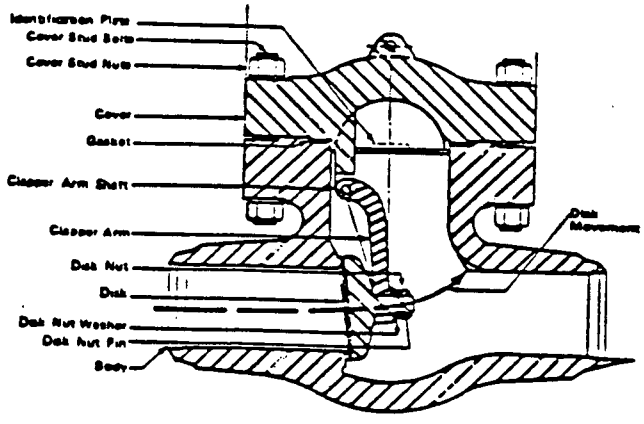

Figure A.1 Cross section of an ALOYCO swing check valve showing disk movement.