Attachment to IPN-85-19

SAFETY PARAMETER DISPLAY SYSTEM

SAFETY ANALYSIS REPORT

New York Power Authority
Indian Point 3 Nuclear Power Plant
Docket No. 50-286

8504220220 850416
PDR ADOCK 05000286
F PDR

TABLE OF CONTENTS

1. 0 INTRODUCTION
1. 1 Summary of Safety Analysis
1. 2 Discussion
1. 3 NRC Criteria

2. 0 SPDS DESIGN DESCRIPTION
2. 1 Overview
2. 2 SPDS Definition
2. 3 SPDS Availability
2. 4 SPDS Use and Location
2. 5 Modes of Operation
2. 6 Display Flexibility
2. 7 Data Storage
2. 8 Signal Validation
2. 9 Electric Power Sources
2.10 Electrical Separation
2.11 Central Computer

3. 0 CFMS CRITICAL SAFETY FUNCTION AND VARIABLE SELECTION
3. 1 Selection Process
3. 2 Critical Safety Functions
3. 3 Critical Safety Functions Variables
3. 4 Instrumentation
3. 5 Analytical Basis for Critical Safety Function and Variable Selection
3. 6 Emergency Response Procedures With and Without SPDS

4. 0 ALARM SYSTEM
4. 1 Annunciation
4. 2 Alarm Processing
4. 3 Critical Safety Function Alarm Algorithms
4. 4 Alarm Signal Quality

5. 0 CFMS DISPLAYS
5. 1 Hierarchy
5. 2 Engineered Safety Features Status
5. 3 Critical Safety Function Matrix Display
5. 4 Operational Displays
5. 5 Plant System Page Descriptions
5. 6 Current Alarm List (CAL)
5. 7 Out-of-Range List
5. 8 Bad Data List
5. 9 Trend Displays

6. 0 HUMAN FACTORS ENGINEERING
6. 1 Design of Displays
6. 2 Design of Operator Console
6. 3 User Functional Training

7. 0 VERIFICATION AND VALIDATION (V & V)
7. 1 Design Verification
7. 2 Validation Testing
7. 3 SPDS Testing

8. 0 CONCLUSION

TABLES
FIGURES

LIST OF TABLES

Table No.	Title
1	Critical Safety Functions
2	Critical Safety Functions Variables
3	Instrumentation for Critical Safety Functions Monitoring
4	CFMS Signal Input List

LIST OF FIGURES

Figure No.	Title
1	CFMS Block Diagram
2	Hardware Configuration
3	QSPDS Block Diagram
4	Control Room Layout
5a - 5f	Critical Safety Function Status Trees
6	CFMS Data Set Processing
7	QSPDS Hierarchy
8	QSPDS Display Pages
9	CFMS Hierarchy
10	CFMS Display Pages
11	CFMS Dialogue Hierarchy (HDSR)
12	Page Control Module

1.0 INTRODUCTION

1.1 Summary of the Safety Analysis

This report provides the safety analysis necessary for the Indian Point Unit No. 3 (IP-3) Safety Parameter Display System (SPDS). Information is provided herein to show that the SPDS was designed to meet the provisions of Supplement 1 to NUREG-0737.

As described in our response to Supplement 1 to NUREG-0737, the Authority contracted in 1981 Combustion Engineering (CE) for the development and implementation of the Emergency Response Facility Data Acquisition and Display System (ERFDADS). The ERFDADS is an integrated program involving replacement of the P-250 plant computer and installation of a Qualified SPDS (QSPDS) and a Critical Function Monitoring System (CFMS).

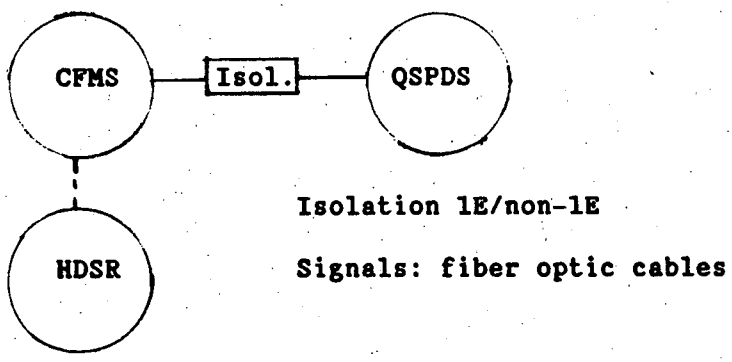

The CFMS (primary display system) is a high performance 32-bit computer providing, on colorgraphic CRTs, displays and alarms of critical safety functions and plant systems parameters in the Control Room (CR)and two Emergency Response Facilities (Technical Support Center and Emergency Operations Facility). A critical safety function is defined as a set of actions which serve to protect the integrity of one or more of the physical barriers against radiation. The CFMS is a redundant computer system, not designed to seismic Category I and electrical Class 1E criteria. The QSPDS is a backup

display system to the CFMS qualified to class 1E standards,including seismic and single-failure proof design, which monitors all Reg. Guide 1.97, Rev. 2, Category 1 variables. The QSPDS utilizies orange plasma gas dot matrix displays.

The CFMS provides for historical data storage and retrieval capability (HDSR). The HDSR system, being a major function of the CFMS, will record, store, recall and display historical information as needed by plant personnel. Historical data can be displayed as graphs and trends or printed out as logs.

The CFMS design calls for instrumentation to monitor plant safety status. Unlike the QSPDS, the CFMS contains information for diversity and speed of assessment. The QSPDS displays a minimum set of plant variables from which the overall plant safety status can be determined by the CR operators. The expanded signal input list of the CFMS (1046 inputs) relative to the QSPDS (108 inputs) and the monitoring of the critical safety functions leads to its designation as the principle SPDS device for purposes of compliance with Supplement 1.

The CFMS critical safety functions were selected to be consistent with the Westinghouse Owners' Group LP version of the Emergency Response Guidelines, Rev. 1, from which IP-3's Emergency Operating Procedures (EOPs) are being developed. The CFMS and QSPDS displays and consoles were developed with consideration of human factors engineering principles. Signal inputs are evaluated for quality and validation. The SPDS verification and validation program will be completed and documented as part of the EOPs upgrade effort, as identified in our Procedure Generation Package and the detailed Control Room Design Review submittals.

1.2 Discussion

The CFMS was designed to be consistent with the Emergency Operating Procedures (EOPs) and the Operators' Training Program. For IP-3, the EOPs are based upon the Westinghouse Owners' Group (WOG) Emergency Response Guidelines.

The Emergency Response Guidelines (ERGs) are composed of:

- o Optimal Recovery Guidelines (ORGs) and Emergency Contingencies
- o Critical Safety Function Status Trees (CSFSTs) and Function Restoration Guidelines (FRGs)

The Optimal Recovery Guidelines provide guidance for the operator to recover the plant from nominal design basis faulted and upset conditions. The Function Restoration Guidelines (FRGs), when used in conjunction with the Critical Safety Function Status Trees (CSFSTs), provide a systematic means for addressing any challenge to plant critical safety functions, which is entirely independent of initiating event or plant state.

The Critical Safety Function Status Trees and the SPDS, perform the same functions and must be compatible. Thus, the Critical Safety Functions (CSTs) and the associated variables in the CFMS data base and algorithms have been based upon the CSFSTs of the WOG ERGs.

1.3 NRC Criteria

1.3.1 Supplement 1 to NUREG-0737

Regarding the SPDS, Section 4.1 of Supplement 1 to NUREG-0737 identified the following NRC criteria:

a. The SPDS should provide a concise display of critical plant variables to the control room operators to aid them in

rapidly and reliably determining the safety status of the plant. Although the SPDS will be operated during normal operations as well as during abnormal conditions, the principal purpose and function of the SPDS is to aid the control room personnel during abnormal and emergency conditions in determining the safety status of the plant and in assessing whether abnormal conditions warrant corrective action by operators to avoid a degraded core. This can be particularly important during anticipated transients and the initial phase of an accident.

b. Each operating reactor shall be provided with a Safety Parameter Display System that is located convenient to the control room operators. This system will continuously display information from which the plant safety status can be readily and reliably assessed by control room personnel who are responsible for the avoidance of degraded and damaged core events.

c. The SPDS shall be suitably isolated from electrical or electronic interference with equipment and sensors that are in use for safety systems. Procedures which describe the timely and correct safety status assessment when the SPDS is and is not available, will be developed by the licensee in parallel with the SPDS. Furthermore, operators should be trained to respond to accident conditions both with and without the SPDS available.

d. The selection of specific information that should be provided for a particular plant shall be based on engineering judgment of individual plant licensees, taking into account the importance of prompt implementation.

e. The SPDS display shall be designed to incorporate accepted human factors principles so that the displayed information can be readily perceived and comprehended by SPDS users.

f. The minimum information to be provided shall be sufficient to provide information to plant operators about:

(i) Reactivity control

(ii) Reactor core cooling and heat removal from the primary system

(iii) Reactor coolant system integrity

(iv) Radioactivity control

(v) Containment conditions

The specific parameters to be displayed shall be determined by the licensee.

The remainder of this report defines the extent of compliance of the IP-3's SPDS with the above NRC criteria.

1.3.2 Regulatory Guide 1.97

The variables needed to determine the status of the Critical Safety Functions (CSFs) and radioactivity releases are identical to the majority of the Types A, B, C, D and E variables of Regulatory Guide 1.97, and therefore these variables constitute a major part of the SPDS (CFMS/QSPDS) data base . As indicated above, the QSPDS design and display is based on Reg. Guide 1.97, Cat. 1 variables. A convenient grouping of the variables by the "barrier" concept results in the selected display arrangement.

2.0 SPDS DESIGN DESCRIPTION

2.1 Overview

One function of the Indian Point Unit No. 3 plant process computer system is the supplying of information required for responses to an emergency condition. Because of the need to develop integrated emergency response facilities and data systems to aid in accident management, the Emergency Response Facility Data Acquisition and Display System (ERFDADS) was developed for IP-3. This system also displays information in the Technical Support Center (TSC) and Emergency Operations Facility (EOF). Figure 1 provides the overall IP-3 ERFDADS block diagram . The hardware configuration for the CFMS/QSPDS is detailed on Figure 2 and the QSPDS block diagram is shown on Figure 3.

2.2 SPDS Definition

SPDS (CFMS/QSPDS) aids the control room operating crew in monitoring the status of the CSFs that constitute the basis of the plant-specific, "symptom-oriented" EOPs. Its principal purpose is to aid the control room personnel during abnormal and emergency conditions in determining the safety status of the plant and in assessing whether abnormal conditions warrant corrective action by operators to avoid a degraded core.

2.3 SPDS Availability

Although the SPDS need not be a safety-grade system, implementation of a highly reliable, state-of-the-art SPDS was an important design objective.

An availability of the SPDS (CFMS/QSPDS) of greater than 99 % during normal plant operation was chosen a design objective. In this context, design availability is understood to encompass the following minimal functional capabilities:

1) The ability to continously monitor and display the status of all critical safety functions.

2) The ability to determine the value of all variables which are used in the CSFs status determination (see CFMS plant systems pages, QSPDS displays and the current alarm list).

2.4 SPDS Use and Location

Four (4) CFMS and two (2) QSPDS displays of CSFs and plant systems status will be accessible to operators in the vicinity of the CR main control boards as shown in Figure 4. Three (3) CFMS CRTs will be located in the TSC and one (1) in the EOF available to personnel required when the Emergency Plan is activated.

2.5 Modes of Operation

The CSFs defined for IP-3 are not appropriate for all modes of operation. Specifically, it is assumed that a status tree is entered from either a Start-up or Power Operation condition and not from a Refueling or Cold Shutdown conditon. However, the CFMS/QSPDS plant systems displays and parameters are available for all the plant modes of operation.

2.6 Display Flexibility

The SPDS hardware and software have the capability to display plant information in the following types of formats:

Alphanumeric prompts, messages and labels

CFSs blocks and matrix

Alarm color code

Mimic/P&ID displays

Operational color code

Multivariable plots vs. time

Variable vs. variable

The CFMS design provides for flexibility and expandability so that additional plant monitoring capabilities can be added with minimal disruption to operations.

2.7 Data Storage

Capability is provided to store up in the HDSR all SPDS variables for the interval from two hour pre-event to fourteeen hours post-event. The data is updated every 2 seconds. The long term data storage which contains information for a 2-week period is updated every minute. Figure 11 provides the HDSR user dialogue hierarchy.

2.8 Signal Validation

The CFMS has the capability of validating individual signals used in CFMS displays and algorithms by use of simple analysis, checking and comparative methods as specified for each CFMS variable.

2.9 Electric Power Source

The CFMS will be powered from a dedicated uninterruptible power supply (UPS) designated to eliminate normal line transients. The UPS is powered from one of the TSC 480V/3ϕ Motor Control Centers (MCC). If the UPS system becomes unavailable, an electronic switch will transfer automatically the CFMS power supply to a second TSC MCC. Both TSC MCCs are backed up by a diesel generator dedicated to the TSC.

2.10 Electrical Separation

The CFMS/QSPDS receive signals from the original plant equipment and the existing computer. The CFMS will receive signals from both Class 1E and non-1E sources. Adequate electrical separation in accordance with the guidance of Regulatory Guide 1.75 and other appropriate IEEE standards (279-71; 344-75; 384-77) is provided for all signals, power sources and output devices. Non-1E inputs into the QSPDS are isolated using the "N" channel.

All QSPDS components are powered from safety-related power sources. Isolation from non-1E equipment is achieved with fiber optic links which withstand more that 600 V-DC common mode or 480 V-AC at 60 Hz between inputs and outputs.

2.11 Central Computer

Central computing capability is provided which allows the following:

1) Update of four C.R. and three TSC display stations at 2 second intervals
2) On-line conversion from plant inputs to engineering units
3) Off-line data base maintenance
4) Calculation of alarm algorithms
5) Generation of color graphical CRT displays
6) Graphical video trending
7) On-line diagnostics
8) Flexibility and expandability such as capability to upgrade to:
    A) Larger CPU
    B) More main memory
    C) Additional bulk storage
    D) Multi-processing - parallel processing
9) Standard information interface with other peripherals and equipment
10) Visual and audio annunciation of alarms

3.0 CFMS CRITICAL SAFETY FUNCTION AND VARIABLE SELECTION

3.1 Selection Process

The CFMS was designed to complement the EOPs, that is, to aid the operator in implementing the EOPs. It is not intended to require the operator to use the CFMS displays in the transient identification. The major user of the CFMS during a transient would be the senior reactor operator (Shift Supervisor) monitoring the overall plant condition and how actions taken by the operators under his direction affect the preservation of the six (6) Westinghouse CSFs. In the event that a CSF is challanged the CFMS will provide the operator with the required FRG identifier necessary to restore the affected function (e.g., FR-C.1, see page 102 of Figure 10).

The WOG ERGs Critical Safety Functions were selected to monitor three barriers to the release of radioactivity. The Critical Safety Functions are associated with the barriers in the following manner:

Barrier	Critical Safety Function
Fuel Matrix and Fuel Clad	Maintenance of SUBCRITICALITY (minimize energy production in the fuel)
	Maintenance of CORE COOLING (provide adequate reactor coolant for heat removal from the fuel)
	Maintenance of HEAT SINK (provide adequate secondary coolant for heat removal from the fuel)
	Control of Reactor Coolant INVENTORY (maintain enough reactor coolant for effective heat removal and pressure control)
Reactor Coolant System Pressure Boundary	Maintenance of a HEAT SINK (provide adequate heat removal from the RCS)
	Maintenance of Reactor Coolant System INTEGRITY (prevent failure of RCS)
	Control of Reactor Coolant INVENTORY (prevent flooding and loss of pressure control)

Containment Vessel — Maintenance of CONTAINMENT Integrity (prevent failure of containment vessel)

Situations can arise in which the integrity of a barrier is lost and cannot be restored even though all Critical Safety Functions are satisfied. The postulated double-ended guillotine break of reactor coolant system piping constitutes an irrevocable failure of the reactor coolant system pressure boundary barrier. In this situation the reactor coolant system pressure boundary barrier is recognized to be failed, and all available resources are directed toward minimizing further degradation of the failed barrier and keeping the fuel matrix/cladding barrier and the containment barrier intact.

The W ERGs status trees are shown in Figures 5a through 5f.

The QSPDS displays, on a separate page, provide information required for Radioactivity Control assessment. A display summarizing Radioactivity Control has been identified to aid the shift supervisor in performing his emergency response function prior to the staffing of the Emergency Response Facilities (TSC and EOF). Radioactivity Control is not a critical safety function, however, since radioactivity assessment has already been factored into the WOG-EOPs status tree for the Containment-CSF.

3.2 Critical Safety Functions

The critical safety functions are shown in Table 1 in order of priority. The status of the critical safety function are indicated by four (colors) states in the W CSFSTs:

- Green - critical safety function is satisfied
- Yellow - critical safety function is not fully satisfied
- Orange - critical safety function is under severe challenge
- Red - critical safety function is in jeopardy

The state of the CSFs are determined by using the CFMS built-in algorithms for the status tree logic given in Figures 5a-5f and the plant-specific data.

The data set for CFMS is divided into two sets according to the two major tasks it performs: 1) Critical Safety Function Alarm processing and display, and 2) operational display. Figure 6 depicts the two data sets and their functions. The QSPDS data set is maintained separately to support these two major tasks. The complete CFMS Signal Input List set is specified in Table 4.

3.3 Critical Safety Function Variables

The variables for determining critical safety function status are the decision points in the CSFSTs. These variables are listed in Table 2, grouped by safety function.

3.4 Instrumentation

The instruments used in measuring the critical safety function variables are given in Table 3.

3.5 Analytical Basis for Critical Safety Function and Variable Selection

The CFMS critical safety functions and variables have been chosen to be identical to the critical safety functions developed for the Emergency Response Guidelines. Thus, the analytical basis for the SPDS selection is the same as the basis for the ERGs. The ERGs critical safety function status trees were reviewed and approved for implementation by the NRC in its Safety Evaluation of "Emergency Response Guidelines" (Generic Letter 83-22).

3.6 Emergency Response With and Without SPDS

The Emergency Response Guidelines contain CSF evaluations that are simple enough to also allow manual evaluations. This manual evaluation will be

performed using the control panels if the CFMS is not available. Since the CFMS only concentrates into one location existing plant indications and the CSFs are entirely compatible with the WOG-ERGs, only one set of procedures (EOPs) are required for the operators. In addition, the QSPDS displays, being structured very similar to the CSFs, will provide the operators with sufficient information necessary to assess at any time the safety status of the plant. (See Figures 7 and 8 for the QSPDS hierarchy and typical displays, respectively).

4.0 ALARM SYSTEM

The alarm system for the CFMS is classified into five categories:

(1) CSF Alarms

(2) Parameter Alarms

(3) Sector Alarms

(4) Failed Sensor Alarms

(5) Computer Failure Alarm

4.1 Annunciation

The CFMS annunciates the SRO display station keyboard to identify:

(1) Critical Safety Function Algorithm alarms

(2) CFMS computer failure alarm

(3) CFMS failed sensor alarm

4.2 Alarm Processing

Out-of-Range Alarms

All the analog acquisition inputs types are checked for out-of-range conditions:

If $INPUT_{(i)} \geqslant HFSP_{(i)}$ or $INPUT_{(i)} \leqslant LFSP_{(i)}$,

where: $INPUT_{(i)}$ = analog input value

i = designator for the input i

$HFSP_{(i)}$ = high failed setpoint for input i

$LFSP_{(i)}$ = low failed setpoint for input i,

then the input has failed the out-of-range check and an out-of-range failure alarm is processed.

For data link analog inputs from the QSPDS, the CFMS checks and alarms on the out-of-range alarm status transmitted with the input.

The composed points and calculated variables are quality checked.

The status of any instrument out-of-range is:

1. Indicated on the out-of-range list (see display section and Fig. 10)
2. Indicated on operational displays with the last valid data in the value field (see display section) and an up or down arrow (↑ or ↓) to indicate out-of-range high or low
3. Transmitted to Critical Safety Function Alarm algorithm for quality checking (if applicable)
4. Processed for audible annunciation
5. Indicated by the "NEW ALARM" message at the bottom of each page.

<u>Bad Data Alarms</u>

If any input acquisition type has a failure caused by the chassis or software malfunction, a bad data alarm is indicated for the input.

The data link inputs an alarm on the appropriate bad data status linked with the input.

The bad data status is:

1. Indicated on the Bad Data Alarm list (see display section and Fig. 10)
2. Indicated on the operational Plant System displays (see display section) by "????" in the value field.
3. Transmitted to the Critical Safety Function Alarm algorithm for quality checking (if applicable)
4. Indicated on the "Bad Data" message at the bottom of each operational page (see display section).

Parameter Alarms

Parameter alarms indicate a warning state to the operator on the operational displays.

For the analog form of input a parameter alarm is initiated whenever an input type exceeds one of the following alarm setpoints.

For the analog form inputs these alarms are:

1. Hi-Hi - immediate action
2. Hi - cautionary
3. Lo - cautionary
4. Lo-Lo - immediate action

Each alarm setpoint has a deadband where the alarm resets at a specified differential amount above the Lo or Lo-Lo setpoint and below the Hi or Hi-Hi setpoint. The deadband avoids alarm chatter for values varying around a setpoint.

For the digital form of input, the parameter alarm is initiated at a specified digital state. Deadband or setpoints are not required.

The above alarm criteria apply to all input types whether direct instrument, composed point, or calculated variables; and to all types of input acquisition whether analog, contact, or data link.

The CFMS incorporates alarms as part of its database.

4.3 Critical Safety Functions Alarm Algorithms

The CFMS monitors the following six W ERGs CSFs:

1. Subcriticality
2. Core Cooling
3. Heat Sink
4. Integrity
5. Containment
6. Inventory

The selected inputs for each critical function are processed through alarm algorithms which alarm when a CSF requires immediate action to maintain control of that function. The alarm algorithms monitor the inputs at all times.

The algorithms utilize time delays, filters, averages, maximums and minimums, time rates, comparison, and logical processing to calcutate the status of the critical safety functions.

All inputs into the CSFSTs are quality checked. As a result of this check, the specific inputs are categorized as follows:

1) Instrument readings determined to be out-of-range, bad data or out-of-scan are considered as invalid data.
2) Single instrument readings which pass limit checks are considered unvalidated data since their value is not compared to other sensor readings.
3) Multiple instrument readings, composed points or calculated variables which are determined to be within predefined limits are considered as valid data.

If two (2) valid readings are available for a given variable, then the most conservative reading, relative to the plant specific value used in the CSFSTs block decision (Figs. 5a-5f), is selected to generate the appropriate FRG procedure identifier. For three (3) or more valid readings available the median value is selected, by the algorithm design, and used in the applicable CSF decision block. In this manner, possible invalid readings are eliminated and only valid inputs are accounted for use in the status trees.

If an input is being used as an unvalidated quality then the algorithm logic assumes conservatively that the next higher level in the tree (i.e., the "NO" condition block) is satisfied and continues on by generating the corresponding FRG procedure. The FRG procedure identifier is accompanied by a question mark sign "?" to alert the operator for further investigation on the failed or unvalidated input. (An algorithm contains logic legs that are logically combined to calculate the CSF status).

4.4 Alarm Signal Quality

The CFMS algorithms are examined with regard to CFS alarm behavior following the failure of a single sensor. The alarm quality signal coupled with the alarm signal gives the operator accurate information on the actual status of the CSF.

False alarms are caused primarily by inputs which feed a "less than" setpoint, a "lowest" calculation or a sum or average calculation. These conclusions assume that a sensor, when failed, goes to a low or zero state. If a sensor fails high then a false alarm is caused by a "greater than" comparison, "greatest" calculation or sum or average calculation. A sensor failing "as is" is difficult to detect and is not in the scope of the CFMS alarms quality algorithm.

The alarm quality signal is discrete signifying only good or bad quality. It is generated from the CFMS signal quality tags in a simple and straight forward manner. Each CSF algorithm is subdivided into branches according to their relative importance. Each of these branches is capable of generating a critical safety function alarm.

The design and implementation of the alarm quality algorithm is similar from algorithm to algorithm and therefore need only be implemented once in software.

All numerical values are shape coded by placing a symbol leading and trailing the value:

<u>Normal</u>

XXXXXX	No Leading or Trailing symbol

<u>Unacknowledged Alarm</u>

XXXXXX*	Trailing*

<u>Acknowledged Alarm</u>

XXXXXX	Leading and Trailing

<u>Bad Data</u>

??????	(Blue) Question Marks

<u>Out-of-Range</u>

XXXXXX ↑	Out-of-Range High
XXXXXX ↓	Out-of Range Low

<u>Out-of-Scan</u>

------	(Blue) Dashes

5.0 CFMS DISPLAY

5.1 Hierarchy

In order to effectively organize the information presented by the CFMS with human factors engineering techniques a top down, three level sectorable hierarchy is used. This hierarchy consists of:

Level 1	-	Overview Information
Level 2	-	Algorithm/Plant Systems Information
Level 3	-	Subsystem and Component Information

Level 1 display pages provide overview information about both the plant and the CFMS. Level 1 displays are primarily alpha-numeric.

The Level 1 displays include the Critical Safety Function Matrix Display and the Plant Systems directory. The CSF Matrix summarizes the CSFSTs algorithms. The Plant Systems Directory presents alarms from systems by alarming the page name. Included in the Level 1 displays are the Current Alarm List (CAL), the Out-of-Range List and the Bad Data List. Also, the CFMS Display Directory, Computer Status and the Trend Pages appear on the upper level of the hierarchy.

Level 2 displays provide major plant system details of the Core, Primary, Secondary, ECCS, Containment and Auxiliaries. Large components of each system are emphasized.

Level 3 displays offer a detailed and diagnostic view (variable alarms) of each subsystem related to the six major systems described in the Level 2 displays. The pages are arranged in closed loops which connect pages with related information. Figure 9 shows the CFMS hierarchy arrangement. Figure 10 details typical CFMS displays.

Movement through the display hierarchy is provided by using the PAGE, SECTOR, EXECUTE, FORWARD and BACK keys on the CFMS page control module (Figure 12). FORWARD, BACK, and SECTOR are also executable by using the trackball module. The trackball can also be used to direct page to the CSFs Alarm Matrix and Plant System overview pages.

Lateral movement through each level is provided by using the FORWARD and BACK keys. Using the trackball for forward and back, the cursor is lined up on the right and left arrows on the right and left edge of the screen and the trackball execute key is pushed.

Vertical movements between levels in the hierarchy are made using the SECTOR key followed by the sector number and the EXECUTE key. This jumps to next lower hierarchy level and displays the page associated with the sector number entered. Each display page has up to nine available sectors. In order to use the trackball for sectoring, one lines up the cursor on the up or down arrows and pushes the trackball execute key.

Sector 0 Execute returns the previous upper level display to the screen. If the present page was reached by direct paging a default upper level page returns to the screen when Sector 0 Execute is pressed. Direct paging is provided to go directly to any page in the display hierarchy. Pressing the PAGE key followed by a three digit page number and the EXECUTE key displays the selected page.

The HDSR and trend sections describe access for these two functions. The Plant Computer provides access to these functions.

Error messages are provided for all illegal page or sector commands. Error messages are removed after five seconds.

5.2 ESF Status

The Engineered Safety Features (ESF) Alarms are located at the lower left corner of the Levels 2 and 3 display. They will be to the right of the CSFs matrix. Normally they will be invisible and will be displayed in YELLOW upon an ESF signal being generated.

The ESF systems which alarm are the following:

1. CIAS - Containment Isolation Phase A Signals
2. SIS - Safety Injection Actuation Signal
3. SLIS - Steam Line Isolation Signal
4. CIBS - Containment Isolation Phase B Signal
5. CVIS - Containment Ventilation Isolation Signal
6. FWIS - Feed Water Isolation Signal
7. RTS - Reactor Trip Signal
8. CPIS - Containment Purge Isolation Signal

Sector Numbers

Sector numbers are normally invisible except:

1. When sector key is pressed, it turns white for 30 seconds.
2. When any related input is in alarm, it turns to the highest priority alarm color.

Alarm Flashing and Acknowledge

Flashing symbols and numeric values are used to attract the attention of the user to a point that has just gone into alarm and has not been acknowledged. These flashing alarms include symbols, numerical values and sector numbers.

- The Security Level 3 user station ACK key stops the flashing on all pages of all display stations.

- The color of the parameter, symbol, or alarm is not affected by acknowledging an alarm.

5.3 CSF Matrix Display

Primary indications to the CFMS users of existing or arriving Critical Function Alarms is accomplished using the Level 1 CSFs Monitoring page. This page describes each critical function and its alarm state.

In order to alert the user of any changes in CSFs status, a CSF Alarm Matrix appears on all operational displays except the trend pages. The matrix provides immediate indication of activity on the Critical Safety Function Monitoring page while the user is viewing other operational pages. When applicable, the time elapsed after reactor trip is displayed next to the CSF matrix. The CSF alarms also annunciate at the Security Level 3 display station keyboard.

The CSF Alarms retain the alarm color following acknowledgement. The audible alarm and blink are suppressed following acknowledgement. Alarms are acknowledged by the ACKNOWLEDGE button on the display station of the user signed on to Security Level 3. Only this one user is capable of acknowledging alarms. A CSF alarm will generate a sector number.

5.4 Operational Displays

Following are the Level 2 and 3 page heirarchy for the operational displays and their associated page numbers:

211. Core System

- 311. ICC Trends
- 312. Reactor Vessel Level
- 313. Core Exit Temperature
- 314. Saturation Margin

222. Primary Systems

321. Pressurizer Systems

322. Boration/Dilution

323. Letdown/Charging

233. Secondary Systems

331. Main Steam System

332. Main Feedwater System

333. Auxiliary Feedwater System

334. Condensate System

244. Emergency Core Cooling Systems

341. Safety Injection Pumps

342. Safety Injection Accumulators

343. Residual Heat Removal System

255. Containment Systems

351. Containment Spray

352. Containment Fan Coolers System

353. Containment Isolation 1 (Phase A & Phase B)

354. Containment Isolation 2 (Main Stream, Containment Vent)

355. Containment Isolation 3 (ECCS Iso, CHG/LTDW/MISC)

266. Auxiliary Systems

361. Turbine Status

Operational displays are accessed either directly by page number or by trackball or Page Control Module sectoring from the Critical Safety Function Monitor page.

5.5 Plant System Page Descriptions

Following are given the functional descriptions of each Plant Systems display page.

The Level 2 of the heirarchy contains six pages . These deal with the following:

211. THE CORE - This page display is concerned with presenting informaton about the Reactor Core. The Hot and Cold leg temperatures, Pressurizer pressure and level channels, Reactor Trip, Excore detector outputs, Control Rod status, and the CVCS system status including Boron Concentration.

222. THE PRIMARY SYSTEM - This page provides an overview of the primary coolant system including the Reactor Coolant Loops, Steam Generators, Pressurizer, Core and Charging System connections.

233. THE SECONDARY SYSTEM - This page provides information concerning the status of the Steam Generators, Main Condenser, Condensate Storage Tank, Main and Auxiliary Feed Pumps, and Condensate Pumps.

244. EMERGENCY CORE COOLING SYSTEM - This page displays an overview of the ECCS' SI pumps, RHR Pumps, Basic Pumps and SI Accumulators, RWST levels with the RHR Systems' Heat Exchangers, SI Boron Injection Tank and associated critical values.

255. THE CONTAINMENT SYSTEM - This page displays the information relevant to the Containment environment, Containment spray operation, Containment Radiation Monitors Status, Hydrogen concentration, Sump levels and Radiation levels.

266. AUXILIARY SYSTEMS - This page displays information on the Service Water Pumps, Containment Fan Coolers, Component Cooling Water System and Diesel Generators.

The lower level of hierarchy (Level 2) associated with the Core page contains four subsystem pages. These are the following:

311. ICC TRENDS - This page displays the core heat removal status and is the primary Inadequate Core Cooling (ICC) display. Since trending of ICC variables are most important, this display has three graphical trends that are time scaled from the present to the previous one and one half (1 1/2) hour.

312. REACTOR VESSEL LEVEL - This page displays a mimic of the Reactor vessel level, Pressurizer levels and Pressures, and RCP status and current are also displayed.

313. CORE EXIT TEMPERATURES - This page presents the location and the alarm status of the temperature at the core exit thermocouple locations on a core mimic. Representative core exit temperature are also included.

314. SATURATION MARGIN - This page displays the pressure and temperature saturation margin for both the RCS loops and Reactor Core. The RCS loop staturation margin is based on the loop highest temperature and lowest pressure. The Core saturation margin is calculated from the average core exit thermocouples temperature, pressurizer pressure and RCS loop pressure. QSPDS inputs are used for this display.

The lower level of hierarchy associated with the Primary System contains three pages of informational displays. These are the following:

321. PRESSURIZER - The summary of the information presented here provides the data necessary to assess the condition of the plant overall RCS pressure and of the Inventory CSF.

322. BORATION/DILUTION - The information displayed on this page is relevant to the Boric Acid and Primary Makeup Tanks, their associated pumps and piping systems.

323. LETDOWN/CHARGING - This page shows the status of the Letdown and Charging systems. The pumps status as well as the conditions of the Volume Control Tank, and Charging and Letdown flows.

The lower level of heirarchy associated with the Secondary System contains four pages of informational displays. They are as follows:

331. MAIN STEAM SYSTEM - This page presents information pertaining to the Main Steam System from the Steam Generators to the Turbines. It covers data presenting Main and Auxiliary Feed flows, Atmospheric Relief valve positions, Air Ejector radiation level, as well as heatup and cooldown rates. The pressurizer pressure and temperature are also shown.

332. MAIN FEEDWATER - This system is presented in detail because of the importance it bears on the Heat Sink CSF. The Steam Generator level and pressure, Main Steam Flow, Main and Aux. Feed Flow, Feed Pumps, and Feedwater Control Valves status are displayed. Heatup and Cooldown rates are also shown.

333. AUX. FEEDWATER - The Auxiliary Feed Systems status as an alternate feedwater source during plant emergencies is required, thus the status of this system is invaluable to the plant operator. The Auxiliary Feed System is also required for plant cooldown. This page displays the status of the Condensate Storage Tank, Auxiliary Feed Pumps, and associated important valves.

334. CONDENSATE - The function of the condensate system for plant cooldown to remove heat from the steam for the vapor to liquid state conversion is required for RCS Heat removal and power operation. The status of the three condensers vacuum, Condensate pumps, Heater Drain pumps is shown on this page. The Steam Bypass Valves positions are displayed. Air Ejector radiation and Steam Generator Blowdown plant radiation monitors outputs are displayed to warn of high radiation in those areas.

The lower level hierarchy associated with the Emergency Core Cooling Systems contains three pages of Informational displays. They are as follows:

341. SAFETY INJECTION PUMPS - Information presented here permits the operator to monitor the flow paths associated with he Safety Injection Pumps, Boron Injection Tank, Reactor Water Storage Tank and Recirculation from the Containment and Recirculation Sumps via their pumps and systems.

342. SAFETY INJECTION ACCUMULATORS - The four safety injection accumulators pressures and levels as well as associated valving are displayed to assist the operator in monitoring their operation and flows.

343. RESIDUAL HEAT REMOVAL - Data presented here allows the operator to monitor the Residual Heat Removal System and to determine if there is a heatup of cooldown rate inappropriate to the plants' required condition. The display also show the status of pumps, valves and heat exchangers.

The lower level of hierarchy associated with the Containment System contains five pages of informational displays. They are as follows:

351. CONTAINMENT SPRAY - This page shows the layout of the Containment Spray Cooling Systems, including the Containment Spray Pumps, the Containment Sump, Containment Recirculation Sump and Spray Coolers.

352. CONTAINMENT FAN COOLER - The five Containment Fan Coolers are displayed with their status. The fan coolers service water flows are displayed. Containment pressures, temperature, Hydrogen and radiation levels are displayed. Containment purge supply and exhaust valves positions are also displayed.

353. CONTAINMENT ISOLATION 1 - This page shows the status of two other systems used to isolate the containment. They are the Phase A Isolation and the Phase B Isolation valve systems.

354. CONTAINMENT ISOLATION 2 - This page displays valves needed to isolate the Containment. Two groups presented are the valves closed by the Main Steam Actuation Signal and the valves closed by the Containment Ventilation Isolation Signal. The Containment personnel locks status is also shown.

355. CONTAINMENT ISOLATION 3 - Displayed on this page are valves in the Emergency Core Cooling Systems, Charging/Letdown/Excess Letdown, Containment sprays and miscellaneous valves.

The lower level of hierarchy associated with the Auxiliary Systems contains one display page.

361. TURBINE - This page has fifteen vibration monitors as well as turbine RPM and rotor position.

Display Page Development Criteria

The CFMS display development incorporates:

- Only instrumented components - the component should have some instrumented variable such as position, Temp, Flow, etc. The exception is a non-instrumented device or component which requires the addition of the instrumentation because of the critical nature of the device.
- Tanks top, sinks bottom; arrows showing flow path-flow is either from containment left to right or to containment right to left.
- Reverse loops are avoided where possible-if a reverse loop is necessary, more flow arrows are used to emphasize the reverse flow path.
- Primary flow paths are displayed in the most direct straight line path with bypass or secondary flows adjacent to the primary paths.
- Uncluttered overview information to point to C.R. control boards for detailed diagnosis and actions.
- Information density less than 30% of available space.
- PID symbols and format.
- Operator inputs for flow paths and configuration.

System Support Displays

The Level 1 displays excluding the Critical Safety Functions Monitor page constitute the CFMS Systems Support displays. They include the following pages.

Security/Printer Assignment

An alphanumeric page is used to sign-on the display station to the CFMS. The functions assigned to the station are dependent upon the security level of the password used for sign-on. A list of the printer

assignments for the system output reports is also displayed. The security page on the Security Level 3 station will also display the sign-on status of the other 6 CFMS stations.

Display Directory - An alphanumeric display which lists the display page titles and page numbers. The Display Directory is arranged in a structured sequence that indicates the three hierarchical levels and the available sectors for each page. Other Level 1 display pages are described below.

5.6 Current Alarm List (CAL)

This alphanumeric display lists parameter alarms in chronological order. As alarms clear they can be removed from the Current Alarm List. The information for each parameter displayed on the current list includes:

- Time of alarm arrival
- Severity of the alarm
- English descriptor of the parameter
- Current parameter value
- Instrument tag no. (point I.D.)
- Operational display page

See page 104 of Figure 10 for a typical CAL page.

5.7 Out-of-Range List

An alphanumeric display lists the out-of-range alarms in chronological order. The information for each out of range alarm message includes:

- "FAIL" identifier
- English descriptor of the parameter
- Point ID
- Operational display page

The out-of-range list uses the same block update technique as the current alarm list described in the previous subsection.

See page 105 of Figure 10 which depicts a typical out-of-range list page .

Alarm Transition Categorization: whenever a parameter fails out of range, the message is placed on the top line in blinking blue until acknowledged.

5.8 Bad Data List

An alphanumeric display lists the bad data alarms in chronological order. The information of each bad data alarm message includes:

- "BADD" identifier
- English descriptor of the parameter
- Point ID
- Operational display page

The bad data list uses the same block update technique as the current alarm list described previously. Figure 10 on page 106 depicts a typical bad data list page.

Alarm Transition Categorization: whenever a parameter fails as bad data, the message is placed on the top line in blinking blue until acknowledge.

5.9 Trend Displays

Two trend display pages provide graphical, time based trends. Each trend display page can trend four parameters. The graphical trend displays are dynamic; that is the top of the trend is the most recent parameter value. The trend displays are separate from the HDSR graphical trends. The HDSR graphical trends option is a static graphic or a "snapshot" of historical data that is not continuously updated.

All four trends on a display page utilize the same scale. All trend graphs can be area filled at one-half normal intensity. Alphanumeric annotation is provided on the trend page. This includes scales, axis and labels. Each trend is capable of displaying the previous 256 points and is continuously updated at a constant time increment.

A typical trend page is depicted in Figure 10, page 120. The trends are set up through the user display stations. The operator initially accesses the dialogue page by keying the DIALOGUE key. The user enters the following information to set up the trends:

1. The page time scale
2. For each of the four graphs
    a. Point ID
    b. Upper and lower engineering range limits (if not entered, default values of the maximum range are automatically selected)
    c. Baseline value

NOTE: All graphs are not required to be filled; i.e., the user can trend from one to four trends per page.

The trend display pages are accessed by keying the TREND key. The trend displays provide the following information:

1. English Descriptor - describes the trend, usually in terms of the monitored process variable.
2. Engineering Units.
3. Alarm Condition.
4. Current numerical value.
5. Digital - display current state.
6. Time Post Trip - time elapsed since reactor trip.
7. Date and Time - seconds figure updated in 5-second increments.
8. Scale - the engineering scale used in the present display.
9. Title and page number.

6.0 HUMAN FACTORS ENGINEERING

The fundamental SPDS design objective is to serve as an operator aid to monitor the overall safety of the plant. Advanced human factors considerations were included in the SPDS (CFMS/QSPDS) design and implementation process.

The central approach to human factors is the application of relevant information about human characteristics and behavior to the design of man-made facilities that people use.

The objectives of human factors in the design of these man-made facilities are:

1. To enhance functional effectiveness
2. To maintain or enhance certain human values in the process
3. To enhance the machine's usability and practicability in stressful situations
4. To facilitate the man machine interface

When designing the CFMS, the role of the SPDS user was taken into consideration, the context of use (control room, EOF and TSC), and the design constraints impacting the human factors development.

It is appropriate to consider the SPDS in the context of a structured crew model, i.e., task analysis. The shift supervisior is designated as the primary SPDS user. The SPDS is intended to aid the Shift Supervisor in allocating resources and directing the crew during highly unusual, complex situations where problem detection and problem solving on a plant-

wide scale is demanded. This approach is consistent with "the goal-controlled, knowledge-based behavior" concept. The role of the human factor verification process assured that good design practices were used to engineer IP-3's CFMS in direct support of these job related tasks. One of the human factors design constraints was a direct consequence of the control room setting as it relates to viewing. Human factors design reflects a compromise between human factors, hardware/software limitations, and styles of use (See Figure 4 for the CR layout).

The initial IP-3 SPDS evaluation yielded the following human factors requirements on the display format:

- High display update frequency
- Fast display page call-ups (less than 5 seconds)
- Need for a top level display
- Provide parameter alarm capability
- Cues required for pages not displayed
- Support normal operation
- Display some additional parameters
- Integrate with emergency procedures (EOPs/CSFSTs)

1) High display update frequency:

   The CFMS displays are updated every 2 seconds. This is sufficient to keep the operator informed during a rapidly changing transient, but is also slow enough to keep the display from being confusing during a transient.

2) Fast display page call-ups:

   It takes no more than 5 seconds to call up a new display page. This will help keep the operator sufficiently up to date during a transient situation.

3) Need for a top level display:

The CFMS has a top level display page (Level 1, page 102) which lists all the critical safety functions. The operator can at any time return to the top level display page to gain an overall view of the plant safety status.

4) Provide parameter alarm capability:

The CFMS provides visual alarms for parameters that exceed alarm setpoints which alert the operator to change in parameter status (blinking or flashing).

5) Cues required for pages not displayed:

A new alarm is indicated on every display page. This cues the operator to return to the top level page to obtain more information on the nature of the alarm.

6) Support normal operations:

The CFMS provides plant data for normal operations as well as abnormal or emergency conditions.

7) Display some additional parameters:

The CFMS displays parameters at a system level (core, primary system, etc.), and at the subsystem or component level (valves, pumps, etc.) in order to give a detailed view.

8) Integrate with emergency procedures (W based EOPs):

Efforts have been completed to integrate the CFMS use with emergency procedures (CSFSTs and FRGs).

6.1 Design of Displays

Advanced human engineering techniques have been incorporated into the design of the CFMS. One way this was accomplished is by displaying only pertinent information related to a critical safety function, and by designing displays so that they are easily understood by the operators.

The displays have been arranged in a hierarchy (Figure 9). The hierarchy consists of three sectorable levels:

1) Level 1 - Overall plant status and CSFs display
2) Level 2 - Function status of Plant Systems
3) Level 3 - Subfunction diagnostic status of plant subsystems or components

The Level 1 display provides the operator with a broad overview of the status of all the safety functions. Level 2 displays more information on a safety function at the system level (i.e.; core,primary system, secondary system, etc.). Level 3 displays provide even more detailed information on a sub-function level (i.e., Safety Injection Pumps, Main Feedwater System, etc.).

The three levels are arranged in a tree structure that allows an operator to "zoom in" on problem areas in a rapid, straightforward manner. The hierarchy is designed to be self guiding. The primary advantage is that the information is organized in a structured, spatial and system-oriented fashion. This allows the user to move through the hierarchy with a minimum of key strokes, no dialogs, a minimum of memorization, and no guide books.

When an abnormality occurs, the affected CSF on the Level 1, page 102 display is highlighted by a color change and on-off blinking of the block contour and function. The operator is then guided to the required EOP FRG and to the Level 2 sector displays to obtain more information on the nature of the abnormality.

Additional display design criteria for the SPDS (CFMS/QSPDS) took the following human factors into account:

Detectability	- brightness, size, contrast and glare
Perceptability	- symbols, scales and graphic forms
Interpretability	- meaning
Density	- clutter

The main objective of the graphics displays is to assist the operator in making correct decisions in a optimal way during all plant conditions. With that objective in mind, the displays were designed to be simple and easy to understand; callup of a new display would be rapid; and effective, consistent use of color (CSFs coordinated with the W prioritization scheme) was incorporated for fast operator response.

A checklist of design considerations in graphics displays included:

- Understanding the task the operator performs
- Indentifying what information the operator needs to perform the task, and
- Selecting the proper display techniques.

The CFMS is designed to maximize contrast with hues. For example, the dark background of the CRT and dark blue containing non-essential information contrast with the cyan, yellow and magenta hues used for monitoring and updating. Alphanumeric are scaled not less than 5 X 7 pixel matrix recommended by good human factors practice. These display designs are consistent with recommendations found in NUREG-0835.

Only upper case letters are used in the CFMS displays, since studies indicate that upper case letters are more legible than lower case. To

ensure legibility, the character height is displayed at a minimum angle of 16 minutes of arc. The display system automatically cues the operator on the occurrence of alarm(s). The sector number and associated symbol will appear in a the alarm color, blinking, allowing the operator to follow a structural fault diagnostic path within the display hierarchy.

6.2 Design of Operator Console

The IP-3 Control Room is relatively compact affording the shift supervisor a good view of the total plant condition. In this context, the control boards and CFMS displays are both complementary and interchangeable. Because of the intended use of the SPDS as a supervisory aid, the design of SPDS (CFMS/QSPDS) consoles was appropriately located away from the control panels as illustrated in Figure 4.

6.3 User Functional Training

Training in the use and interpretation of the CFMS and QSPDS has been given recently to IP-3 C.R. operators, plant personnel and management, to confirm that the SPDS can be readily perceived and comprehended by its SPDS users. Additional traning will be provided in conjunction with the EOP upgrade effort and completed prior to startup from the Cycle 4/5 refueling outage.

7.0 VERIFICATION AND VALIDATION (V & V)

7.1 Design Verification

Verification involves independent requirements and design reviews. The requirements are the foundation upon which the SPDS was designed (NUREGs-0696, 0835,0737 and Supplement 1 to 0737). As stated previously the SPDS V&V will be completed as part of our EOP upgrade effort. The reviews will consist of evaluating:

1. The implementation of human factors requirements for effective man/machine interfacing (as addressed in Section 6.0)
2. The establishment of SPDS hardware environment in terms of reliability, maintainability and operating requirements
3. The definition of inputs, outputs and historical data base (HDSR) requirements, and
4. The confirmation of the adequacy of the SPDS alarm strategy in responding to plant emergency conditions in a meaningful fashion.

The objective of validation testing will be to certify that the CFMS/QSPDS operate in accordance with their design specifications. There are two activitives related to validation testing: 1) Functional and Software Test Plan and 2) Test Execution and Results Analysis in accordance with CE procedures.

The level of V & V to be performed is consistent with the view of the SPDS as a control room operational aid. The SPDS displays parameters that monitor the plant fundamental safety functions.

7.2 Validation Testing

Algorithm simulator testing was performed in the following manner: Transient data, generated using standard transient analysis computer codes were inputed to the CFMS, and a determination of the appropriate

CSFs alarms and sequence of alarm was made for dynamic testing purposes. Expected alarms for each jeopardized critical function were observed and analyzed.

In addition, two factors will be evaluated during future testing:

(1) that operators using the CFMS would maintain plant critical functions effectively, and

(2) that effective maintenance of critical functions is equivalent to overall improved plant safety.

7.3 SPDS Testing

1. System Testing

All the functions of the CFMS/QSPDS are fully tested using functional test procedures. The functional tests include input processing, alarm state transition tests, display processing, annunciator output tests, inadequate core cooling tests, and others. All test exceptions are identified, resolved, and the function retested before any software is replaced. An independent review of this testing process is also performed.

2. Pre-operational Testing

Pre-operational testing will be preformed at IP-3, before the SPDS is installed for use by control room operators. Pre-operational testing includes all of the functional testing mentioned in the previous section, as well as hardware tests and string checks. This provides not only a check on the software, but a check on the overall ERFDADS installed system.

8.0 CONCLUSION

The SPDS for Indian Point Unit No. 3 was desinged to adequately address the provisions of Supplement 1 to NUREG-0737. Specifically:

a) The SPDS (CFMS/QSPDS) provides a concise display of reliable plant critical variables and functions to aid the control room operators in determining the safety status of the plant. The CFMS is consistent with the Westinghouse Emergency Response Guidelines and the IP-3 upgraded Emergency Operating Procedures (CSFSTs/FRGs).

b) The SPDS display continuously CSF information on colorgraphic terminals located conveniently in the control room, TSC and EOF. The SPDS meets availability considerations consistent with the SPDS function.

c) Since the SPDS is completely consistent with the Westinghouse Emergency Response Guidelines and uses existing plant indications, only one set of procedures is required for emergency response with and without the SPDS. Adequate electrical separation is provided in accordance with the guidelines of Regulatory Guide 1.75.

d) The critical safety functions and associated variables have been selected to be consistent with the analytical basis of the Emergency Response Guidelines. In general, the Regulatory Guide 1.97 instruments are the source of the variable. The QSPDS processes only seismic qualified 1E signals.

e) The SPDS displays and consoles were designed to meet advanced human factors principles so that the displayed information can be readly perceived and comprehended.

f) The SPDS provides information about:

(1) reactivity control

(2) core cooling and heat removal

(3) RCS integrity

(4) radioactivity control

(5) containment conditions

The W CSFs, displayed on the CFMS, as well as the QSPDS information, are identical with the above NRC functions.

This safety analysis shows that the SPDS will be consistent with Emergency Response Guidelines and the IP-3 Emergency Operating Procedures, and provides an integrated approach to abnormal and emergency conditions. The Verification and Validation Program assures that independent reviews are being conducted to assure proper implementation of the SPDS design. The SPDS has the capability to be upgraded and the design is expandable to accept new functions. The selected parameters are sufficient to assess the safety status of CSFs for a wide range of events because the SPDS uses both narrow and wide range instrument indications.

No technical specifications exist on SPDS, however the QSPDS is a highly reliable Class 1E seismic qualified backup display system.

The SPDS installation would not involve an unreviewed safety question in acordance with 10 CFR 50.59. The SPDS will not create any new safety

hazard; it is a passive monitoring and indication system which only concentrates information into one location, and does not interfere with the automatic initiation of any protection system. The CFMS operates on its own power supply, thus not degrading any other safety related system. All the inputs, with the exception of composed points, can be confirmed through other instrumentation on the main control board.

The SPDS design complies to NUREGs-0696, 0835, 0737, and Supplement 1 to NUREG-0737 requirements and therefore it will be an effective aid for the control room operators to determine the safety status of the plant during abnormal and emergency conditions, because it enhances operator ability to comprehend plant conditions and interact in situations that require human intervention.

TABLES

TABLE 1

CRITICAL SAFETY FUNCTIONS

I.	F-0.1	Subcriticality	(S)	Highest Priority
II.	F-0.2	Core Cooling	(C)	↕
III.	F-0.3	Heat Sink	(H)	
IV.	F-0.4	Integrity	(P)	
V.	F-0.5	Containment	(Z)	
VI.	F-0.6	Inventory	(I)	Lowest Priority

TABLE 2

CRITICAL SAFETY FUNCTIONS VARIABLES

SAFETY FUNCTION		VARIABLE	
I.	Subcriticality	1.	Reactor Trip
		2.	Power Level
		3.	Startup Rate (SUR)
		4.	Source Range Energized
II.	Core Cooling	1.	Core Exit Temperature
		2.	RCS Subcooling
		3.	RCPs Status
		4.	RV Level
III.	Heat Sink	1.	SG Level (narrow range)
		2.	Total FW flow rate
		3.	SG Pressure
IV.	Integrity	1.	Cooldown Rate
		2.	RCS Pressure
		3.	RCS Temperature
V.	Containment	1.	Containment Pressure
		2.	Containment Sump Level
		3.	Containment Radiation
VI.	Inventory	1.	PZR Level
		2.	RV Level

TABLE 3

INSTRUMENTATION FOR CRITICAL
SAFETY FUNCTIONS MONITORING

CSF: Subcriticality

VARIABLE: Reactor Trip

DESCRIPTION	INSTRUMENT I.D.
Reactor Trip Breaker A	52 BYB RTA
Reactor Trip Breaker B	52 BYA RTB

CSF: Subcriticality

VARIABLE: Power Level

DESCRIPTION	INSTRUMENT I.D.
Power Range	N 41
Detectors	N 42
	N 43
	N 44

CSF: Subcriticality

VARIABLE: Startup Rate (SUR)

DESCRIPTION	INSTRUMENT I.D.
Intermediate Range Detectors	N 35*
	N 36*
Source Range Detectors	N 31*
	N 32*

*NOTE: SUR is derived by differentiating over a 10-seconds period.

CSF: Subcriticality

VARIABLE: Source Range Energized

DESCRIPTION	INSTRUMENT I.D.
Source Range	N 31
Detectors	N 32

CSF: Core Cooling

VARIABLE: Core Exit Temperature

DESCRIPTION	INSTRUMENT I.D.
Core Exit Thermocouples	65 TC_s

CSF: Core Cooling

VARIABLE: RCS Subcooling

DESCRIPTION	INSTRUMENT I.D.
Wide Range Hot and Cold Leg Temperature	TE 413A TE 423A TE 433A TE 443A TE 413B TE 423B TE 433B TE 443B
RCS Pressure Loop #1 (wide range) Loop #2	PT 402 PT 403

CSF: Core Cooling

VARIABLE: RCP_s Status

DESCRIPTION		INSTRUMENT I.D.
RCP Status	#31	RCP 31
	#32	RCP 32
	#33	RCP 33
	#34	RCP 34
RCP Current	#31	RCPA I
	#32	RCPB I
	#33	RCPC I
	#34	RCPD I
RCS Loop Flow	#1	FT 414/415/416
	#2	FT 424/425/426
	#3	FT 434/435/436
	#4	FT 444/445/446

CSF: Core Cooling

VARIABLE: RV Level

DESCRIPTION	INSTRUMENT I.D.
RV Level	Points reserved in system (Later)

CSF: Heat Sink

VARIABLE: SG Level

DESCRIPTION	INSTRUMENT I.D.
SG Level N.R. #31	LT 417A/B/C
#32	LT 427A/B/C
#33	LT 437A/B/C
#34	LT 447A/B/C

CSF: Heat Sink

VARIABLE: Total FW Flowrate

DESCRIPTION	INSTRUMENT I.D.
Aux. Feed Flow to SG #31	FT 1200
#32	FT 1201
#33	FT 1203
#34	FT 1202
Main FD Flow to SG #31	FT 418A/B
#32	FT 428A/B
#33	FT 438A/B
#34	FT 448A/B

CSF: Heat Sink

VARIABLE: SG Pressure

DESCRIPTION	INSTRUMENT I.D.
SG Main Steam Pressure #31	PT 419A/B/C
#32	PT 429A/B/C
#33	PT 439A/B/C
#34	PT 449A/B/C

CSF: Integrity

VARIABLE: Cooldown Rate

DESCRIPTION		INSTRUMENT I.D.
Cold Leg Temperature Loop	#1	TE 413B
(wide range)	#2	TE 423B
	#3	TE 433B
	#4	TE 443B

CSF: Integrity

VARIABLE: RCS Pressure

DESCRIPTION	INSTRUMENT I.D.
RCS Pressure Loop #1	PT 402
(wide-range) #4	PT 403

CSF: Integrity

VARIABLE: RCS Temperature

DESCRIPTION		INSTRUMENT I.D.
Hot Leg Temperature Loop	#1	TE 413A
(wide-range)	#2	TE 423A
	#3	TE 433A
	#4	TE 443A

CSF: Containment

VARIABLE: Containment Pressure

DESCRIPTION		INSTRUMENT I.D.
Containment High Pressure (wide range)		PT 1421/1422
Containment Pressure Loop (narrow-range)	#1A	PT 948A
	#1B	PT 948B
	#1C	PT 948C
	#2A	PT 949A
	#2B	PT 949B
	#2C	PT 949C

CSF: Containment

VARIABLE: Containment Sump Level

DESCRIPTION	INSTRUMENT I.D.
Containment Sump Level 4"	LT 940
10"	LT 941
Containment Recirculation Sump Level	LT 1251/1252
Containment Level	LT 1253/1254
Containment Sump LEvel (wide-range)	LT 1255/1256

CSF: Containment

VARIABLE: Containment Radiation

DESCRIPTION		INSTRUMENT I.D.
Containment High Radiation Monitor	#1	R 25
	#2	R 26
Containment Area Rad. Monitor		R 2

CSF: Inventory

VARIABLE: Pressurizer (PZR) Level

DESCRIPTION	INSTRUMENT I.D.
Pressurizer Level #1	LT 459
#2	LT 460
#3	LT 461

CSF: Inventory

VARIABLE: RV Level

DESCRIPTION	INSTRUMENT I.D.
RV Level	Points reserved in system (Later)

TABLE 4

CFMS SIGNAL INPUT LIST

INST	DESCRIPT	A	COMPNO	CENO
	CONT ROD BNK D STEP IN PULSE	D	C0007D	397
	RCLA 1 LO F PART RE	D	F0400D	413
	RCLA 2 LO F PART RE	D	F0401D	414
	RCLA 3 LO F PART RE	D	F0402D	415
	STM GEN A LO FW F1 PART RE	D	F0404D	417
	STM GEN A LO FW F2 PART RE	D	F0405D	418
	RCLB 1 FO F PART RE	D	F0420D	423
	RCLB 2 LO F PART RE	D	F0421D	424
	RCLB 3 LO F PART RE	D	F0422D	425
	STM GEN B LO FW 1 PART RE	D	F0424D	427
	STM GEN B LO FW 2 PART RE	D	F0425D	428
	RCLC 1 LO F PART RE	D	F0440D	433
	RCLC 2 LO F PART RE	D	F0441D	434
	RCLC 3 LO F PART RE	D	F0442D	435
	STM GEN C LO FW F1 PART RE	D	F0444D	437
	STM GEN C LO FW F2 PART RE	D	F0445D	438
	RCLD 1 LO F PART RE	D	F0460D	443
	RCLD 2 LO F PRT RE	D	F0461D	444
	RCLD 3 LO F PART RE	D	F0462D	445
	STM GEN D L0 FW F1 PART RE	D	F0464D	447
	STM GEN D LO FW F2 PART RE	D	F0465D	448
	STM LINE HI F TR T & P PERM	D	F0494D	454
	STM GEN A LO L1 PART RE	D	L0400D	461
	STM GEN A LO L2 PART RE	D	L0401D	462
	STM GEN A LO LO L1 /RE	D	L0403D	463
	STM GEN LO LO L2 /RE	D	L0404D	464
	STM GEN A LO LO L3 /RE	D	L0405D	465
	STM GEN B LO L1 PART RE	D	L0420D	467
	STM GEN B LO L2 PART RE	D	L0421D	468
	STM GEN B LO LO L1 /RE	D	L0423D	469
	STM GEN B LO LO L2 /RE	D	L0424D	470
	STM GEN B LO LO L3 /RE	D	L0425D	471
	STM GEN C LO L1 PART RE	D	L0440D	473
	STM GEN C LO L2 PART RE	D	L0441D	474
	STM GEN C LO LO L1 /RE	D	L0443D	475
	STM GEN C LO LO L2 /RE	D	L0444D	476
	STM GEN C LO LO L3 /RE	D	L0445D	477
	STM GEN D LO L1 PART RE	D	L0460D	479
	STM GEN LO L2 PART RE	D	L0461D	480
	STM GEN D LO LO L1 /RE	D	L0463D	481
	STM GEN D LO LO L2 /RE	D	L0464D	482
	STM GEN D LO LO L3 /RE	D	L0465D	483
	PRESSURIZER HI L2 PART RE	D	L0481D	486
	PRESSURIZER HI L3 PART RE	D	L0482D	487
	PWR RNG CHANNEL 2 LO Q PART RE	D	N0007D	498
	PWR RNG CHAN LO Q RE TR 1 BLK	D	N0015D	506
	PWR RNG CHAN LO Q RE TR 2 BLK	D	N0016D	507
	NUCLEAR ROD DROP	D	N0017D	508
	INTERM RNG HI Q RE TR 1 BLK	D	N0022D	511
	INTERM RNG HI Q RE TR 2 BLK	D	N0023D	512

NOTES:

1. The letters below correspond to the first letter of Instrument column
   - C – Control rods
   - F – Flow
   - L – Level
   - N – Nuclear
   - P – Pressure
   - T – Temperature
   - R – Radiation
   - Y – Miscellaneous instrument
   - Z – Valve, door position
2. A "5XXX" number in the CENO column denotes QSPDS processing (1E).

INST	DESCRIPT	A	COMPNO	CENO
	SOURCE RNG HI Q TR 1 BLK	D	N0034D	517
	SOURCE RNG HI Q TR 2 BLK	D	N0035D	518
	IN CORE MOV A THIMB 1 SPR	D	N0040D	519
	IN CORE MOV A THIMB 2 H15	D	N0041D	520
	IN CORE MOV A THIMB 3 KO2	D	N0042D	521
	IN CORE MOV A THIMB 4 L10	D	N0043D	522
	IN CORE MOV A THIMB 5 PO4	D	N0044D	523
	IN CORE MOV A THIMB 6 HO6	D	N0045D	524
	IN CORE MOV A THIMB 7 D12	D	N0046D	525
	IN CORE MOV A THIMB 8 BO6	D	N0047D	526
	IN CORE MOV A THIMB 9 EO9	D	N0048D	527
	IN CORE MOV A THIMB 10 SPR	D	N0049D	528
	IN CORE MOV B THIMB 1 D10	D	N0050D	529
	IN CORE MOV B THIMB 2 SPR	D	N0051D	530
	IN CORE MOV B THIMB 3 A11	D	N0052D	531
	IN CORE MOV B THIMB 4 KO6	D	N0053D	532
	IN CORE MOV B THIMB 5 F01	D	N0054D	533
	IN CORE MOV B THIMB 6 F07	D	N0055D	534
	IN CORE MOV B THIMB 7 R06	D	N0056D	535
	IN CORE MOV B THIMB 8 N14	D	N0057D	536
	IN CORE MOV B THIMB 9 N02	D	N0058D	537
	IN CORE MOV B THIMB 10 SPR	D	N0059D	538
	IN CORE MOV C THIMB 1 G09	D	N0060D	539
	IN CORE MOV C THIMB 2 R08	D	N0061D	540
	IN CORE MOV C THIMB 3 SPR	D	N0062D	541
	IN CORE MOV C THIMB 4 C05	D	N0063D	542
	IN CORE MOV C THIMB 5 B13	D	N0064D	543
	IN CORE MOV C THIMB 6 H11	D	N0065D	544
	IN CORE MOV C THIMB 7 J14	D	N0066D	545
	IN CORE MOV C THIMB 8 J01	D	N0067D	546
	IN CORE MOV C THIMB 9 L08	D	N0068D	547
	IN CORE MOV C THIMB 10 F03	D	N0069D	548
	IN CORE MOV D THIMB 1 J07	D	N0070D	549
	IN CORE MOV D THIMB 2 R11	D	N0071D	550
	IN CORE MOV D THIMB 3 B08	D	N0072D	551
	IN CORE MOV D THIMB 4 SPR	D	N0073D	552
	IN CORE MOV D THIMB 5 L13	D	N0074D	553
	IN CORE MOV D THIMB 6 N04	D	N0075D	554
	IN CORE MOV D THIMB 7 D14	D	N0076D	555
	IN CORE MOV D THIMB 8 G05	D	N0077D	556
	IN CORE MOV D THIMB 9 D03	D	N0078D	557
	IN CORE MOV D THIMB 10 SPR	D	N0079D	558
	IN CORE MOV E THIMB 1 K12	D	N0080D	559
	IN CORE MOV E THIMB 2 F14	D	N0081D	560
	IN CORE MOV E THIMB 3 H04	D	N0082D	561
	IN CORE MOV E THIM 4 M07	D	N0083D	562
	IN CORE MOV E THIMB 5 SPR	D	N0084D	563
	IN CORE MOV E THIMB 6 N13	D	N0085D	564
	IN CORE MOV E THIMB 7 J08	D	N0086D	565
	IN CORE MOV E THIMB 8 C07	D	N0087D	566
	IN CORE MOV E THIMB 9 F08	D	N0088D	567
	IN CORE MOV E THIMB 10 SPR	D	N0089D	568
	IN CORE MOV F THIMB 1 D08	D	N0090D	569
	IN CORE MOV F THIMB 2 H02	D	N0091D	570

INST	DESCRIPT	A	COMPNO	CENO
	IN CORE MOV F THIMB 3 B03	D	N0092D	571
	IN CORE MOV F THIMB 4 L15	D	N0093D	572
	IN CORE MOV F THIMB 5 N06	D	N0094D	573
	IN CORE MOV F THIMB 6 SPR	D	N0095D	574
	IN CORE MOV F THIMB 7 G12	D	N0096D	575
	IN CORE MOV F THIMB 8 A09	D	N0097D	576
	IN CORE MOV F THIMB 9 B09	D	N0098D	577
	IN CORE MOV F THIMB 10 SPR	D	N0099D	578
	TB HYD OIL LO P1 /RE	D	P0396D	579
	TB HYD OIL LO P2 /RE	D	P0397D	580
	TB HYD OIL LO P3 /RE	D	P0398D	581
	PRESSURIZER HI P1 PART RE	D	P0480D	599
	PRESSURIZER HI P2 PART RE	D	P0481D	600
	PRESSURIZER HI P3 PART RE	D	P0482D	601
	PRESSURIZER LO P1 PART RE	D	P0484D	603
	PRESSURIZER LO P3 PART RE	D	P0486D	605
	PRESSURIZER LO P4 PART RE	D	P0487D	606
	PRESSURIZER LO P SI TR 1 BLOCK	D	P0495D	614
	PRESSURIZER LO P SI TR 2 BLOCK	D	P0496D	615
	UNIT MAIN AUXILIARY PULSE MWH	D	Q0320D	620
	UNIT STANDBY AUXILIARY PULSE MWH	D	Q0321D	621
	UNIT GENERATOR GROSS PULSE MWH	D	Q0340D	622
	RCPA BUS UNDER VOLT1 /RE	D	V0320D	633
	RCPB BUS UNDER VOLT1 /RE	D	V0321D	634
	RCPC BUS UNDER VOLT1 /RE	D	V0322D	635
	RCPD BUS UNDER VOLT1 /RE	D	V0323D	636
	IN CORE T COMPTR	D	Y0008D	645
	REAC AUX TR BRKR A	D	Y0026D	646
	REAC AUX TR BRKR B	D	Y0027D	647
	IN CORE MOV DET ALL DRIVES	D	Y0035D	648
	IN CORE MOV DET AUTO	D	Y0036D	649
	IN CORE MOV DET COMPTR	D	Y0037D	650
	IN CORE MOV DET A ON	D	Y0040D	653
	IN CORE MOV DET A CALIBR	D	Y0041D	654
	IN CORE MOV DET A FOR B	D	Y0042D	655
	IN CORE MOV DET A RNG 1	D	Y0043D	656
	IN CORE MOV DET A RNG 2	D	Y0044D	657
	IN CORE MOV DET A RNG 3	D	Y0045D	658
	IN CORE MOV DET A RNG 4	D	Y0046D	659
	IN CORE MOV DET A RNG 5	D	Y0047D	660
	IN CORE MOV DET A DRIVE	D	Y0048D	661
	IN CORE MOV DET A COMMON GROUP	D	Y0049D	662
	IN CORE MOV DET 8 ON	D	Y0050D	663
	IN CORE MOV DET B CALIBR	D	Y0051D	664
	IN CORE MOV DET B FOR C	D	Y0052D	665
	IN CORE MOV DET B RNG 1	D	Y0053D	666
	IN CORE MOV DET 8 RNG 2	D	Y0054D	667
	IN CORE MOV DET B RNG 3	D	Y0055D	668
	IN CORE MOV DET B RNG 4	D	Y0056D	669
	IN CORE MOV DET B RNG 5	D	Y0057D	670
	IN CORE MOV DET B DRIVE	D	Y0058D	671
	IN CORE MOV DET B COMMON GROUP	D	Y0059D	672
	IN CORE MOV DET C ON	D	Y0060D	673
	IN CORE MOV DET C CALIBR	D	Y0061D	674

INST	DESCRIPT	A	COMPNO	CENO
	IN CORE MOV DET C FOR D	D	Y0062D	675
	IN CORE MOV DET C RNG 1	D	Y0063D	676
	IN CORE MOV DET C RNG 2	D	Y0064D	677
	IN CORE MOV DET C RNG 3	D	Y0065D	678
	IN CORE MOV DET C RNG 4	D	Y0066D	679
	IN CORE MOV DET C RNG 5	D	Y0067D	680
	IN CORE MOV DET C DRIVE	D	Y0068D	681
	IN CORE MOV DET C COMMON GROUP	D	Y0069D	682
	IN CORE MOV DET D ON	D	Y0070D	683
	IN CORE MOV DET D CALIBR	D	Y0071D	684
	IN CORE MOV DET D FOR E	D	Y0072D	685
	IN CORE MOV DET D RNG 1	D	Y0073D	686
	IN CORE MOV DET D RNG 2	D	Y0074D	687
	IN CORE MOV DET D RNG 3	D	Y0075D	689
	IN CORE MOV DET D RNG 4	D	Y0076D	690
	IN CORE MOV DET D RNG 5	D	Y0077D	691
	IN CORE MOV DET D DRIVE	D	Y0078D	692
	IN CORE MOV DET D COMMON GROUP	D	Y0079D	693
	IN CORE DET E ON	D	Y0080D	694
	IN CORE MOV DET E CALIBR	D	Y0081D	695
	IN CORE MOV DET E FOR F	D	Y0082D	696
	IN CORE MOV DET E RNG 1	D	Y0083D	697
	IN CORE MOV DET E RNG 2	D	Y0084D	698
	IN CORE MOV DET E RNG 3	D	Y0085D	699
	IN CORE MOV DET E RNG 4	D	Y0086D	700
	IN CORE MOV DET E RNG 5	D	Y0087D	701
	IN CORE MOV DET E DRIVE	D	Y0088D	702
	IN CORE MOV DET E COMMON GROUP	D	Y0089D	703
	IN CORE MOV DET F ON	D	Y0090D	704
	IN CORE MOV DET F CALIBR	D	Y0091D	705
	IN CORE MOV DET F FOR A	D	Y0092D	706
	IN CORE MOV DET F RNG 1	D	Y0093D	707
	IN CORE MOV DET F RNG 2	D	Y0094D	708
	IN CORE MOV DET F RNG 3	D	Y0095D	709
	IN CORE MOV DET F RNG 4	D	Y0096D	710
	IN CORE MOV DET F RNG 5	D	Y0097D	711
	IN CORE MOV DET F DRIVE	D	Y0098D	712
	IN CORE MOV DET F COMMON GROUP	D	Y0099D	713
	CHARGING PMP A BKR	D	Y0100D	714
	CHARGING PMP B BKR	D	Y0101D	715
	CHARGING PMP C BKR	D	Y0102D	716
	BLENDER TO CHARGE PMP VALVE	D	Y0103D	717
	BLENDER TO VOL CONT TANK VALVE	D	Y0104D	718
	RESIDUAL HEAT PMP A BKR	D	Y0600D	729
	RESIDUAL HEAT PMP B BKR	D	Y0601D	730
52BYA RTB	U/V RELAY REACTOR TRIP TRAIN B	D	UVRTBBYA	875
52BYB RTA	U/V RELAY REACTOR TRIP TRAIN A	D	UVRTABYB	876
A1 BKR	UNIT ON LINE TIE OCB A1 BKR	D	Y0335D	719
AFP 31	AUX FEED PMP 31 STATUS	D	AFP31D	1226
AFP 33	AUX FEED PMP 33 STATUS	D	AFP33D	1228
BA 31 STAT	BORIC ACID PUMP 31 STATUS	D	BATP31D	972
BA[illegible] STAT	BORIC ACID PUMP 32 STATUS	D	BATP32D	973
BF[illegible]-31	MAIN FEED	D	ZH231SD	858
BFD 2-32	MAIN FEED	D	ZH232SD	859

INST	DESCRIPT	A	COMPNO	CENO
BFP 31 STA	BOILER FEED PUMP 31 STATUS	D	BFP31D	1229
BF[illegible]2 STA	BOILER FEED PUMP 32 STATUS	D	BFP32D	1230
BI[illegible]LWTR	BFP SEAL WTR DR PUMP STAT	D	BFPSWD	1232
BRG OIL P	LOW BEARING OIL PRESS TRIP	D	Y9036D	733
CA11X	CNMT ISO PHASE A	D	SCA11XD	5001
CA21X	CNMT ISO PHASE A	D	SCA21XD	5002
CB11X	CNMT ISO PHASE B	D	SCB11XD	5003
CB21X	CNMT ISO PHASE B	D	SCB21XD	5004
CCP 31	COMPONENT COOL PMP 31 STAT	D	CCP31D	1233
CCP 32	COMPONENT COOL PMP 32 STAT	D	CCP32D	1234
CCP 33	COMPONENT COOL PMP 33 STAT	D	CCP33D	1235
CETA07	IN CORE TEMP A07	A	T0001A	231
CETA11	IN CORE TEMP A11	A	T0034A	264
CETB03	IN CORE TEMP B03	A	T0002A	5067
CETB06	IN CORE TEMP B06	A	T0035A	5056
CETB08	IN CORE TEMP B08	A	T0036A	266
CETB10	IN CORE TEMP B10	A	T0003A	5049
CETB13	IN CORE TEMP B13	A	T0004A	5068
CETC08	IN CORE TEMP C08	A	T0005A	235
CETC12	IN CORE TEMP C12	A	T0037A	267
CETD02	IN CORE TEMP D02	A	T0006A	236
CETD04	IN CORE TEMP D04	A	T0038A	268
CETD07	IN CORE TEMP D07	A	T0039A	269
CETD09	IN CORE TEMP D09	A	T0040A	270
CETE02	IN CORE TEMP E02	A	T0041A	5072
CETE04	IN CORE TEMP E04	A	T0007A	237
CE[illegible]5	IN CORE TEMP E05	A	T0042A	5073
CE[illegible]8	IN CORE TEMP E08	A	T0008A	238
CETE10	IN CORE TEMP E10	A	T0009A	239
CETE11	IN CORE TEMP E11	A	T0043A	5074
CETE14	IN CORE TEMP E14	A	T0044A	5075
CETF05	IN CORE TEMP F05	A	T0045A	275
CETF09	IN CORE TEMP F09	A	T0046A	276
CETF12	IN CORE TEMP F12	A	T0010A	5051
CETG02	IN CORE TEMP G02	A	T0011A	242
CETG04	IN CORE TEMP G04	A	T0047A	5076
CETG08	IN CORE TEMP G08	A	T0048A	278
CETG09	IN CORE TEMP G09	A	T0012A	242
CETG15	IN CORE TEMP G15	A	T0013A	243
CETH01	IN CORE TEMP H01	A	T0014A	244
CETH03	IN CORE TEMP H03	A	T0015A	245
CETH05	IN CORE TEMP H05	A	T0049A	279
CETH08	IN CORE TEMP H08	A	T0016A	246
CETH09	IN CORE TEMP H09	A	T0050A	280
CETH10	IN CORE TEMP H10	A	T0017A	247
CETH13	IN CORE TEMP H13	A	T0018A	248
CETH14	IN CORE TEMP H14	A	T0051A	281
CETJ07	IN CORE TEMP J07	A	T0052A	5060
CETJ10	IN CORE TEMP J10	A	T0019A	5053
CETJ11	IN CORE TEMP J11	A	T0020A	250
CETJB A1T	REF JUNCTION BOX 1A TEMP	A	T0087A	296
CETJB A1T	REF JUNCTION BOX 1A TEMP	A	T0087A	5065
CE[illegible] A2T	IN CORE T JUNCTION BOX A2T	A	T0088A	297
CE[illegible] B1T	REF JUNCTION BOX 1B TEMP	A	T0089A	298

INST	DESCRIPT	A	COMPNO	CENO
CETJB B1T	REF JUNCTION BOX 1B TEMP	A	T0089A	5066
CE[illegible] B2T	IN CORE T JUNCTION BOX B2T	A	T0090A	299
CE[illegible]3	IN CORE TEMP K03	A	T0021A	5069
CETK11	IN CORE TEMP K11	A	T0053A	283
CETK13	IN CORE TEMP K13	A	T0054A	284
CETK15	IN CORE TEMP K15	A	T0022A	252
CETL02	IN CORE TEMP L02	A	T0055A	5077
CETL05	IN CORE TEMP L05	A	T0056A	5078
CETL07	IN CORE TEMP L07	A	T0057A	287
CETL11	IN CORE TEMP L11	A	T0058A	5062
CETL12	IN CORE TEMP L12	A	T0024A	5070
CETL14	IN CORE TEMP L14	A	T0059A	5079
CETL01	IN CORE TEMP L01	A	T0023A	253
CETM08	IN CORE TEMP M08	A	T0026A	256
CETM10	IN CORE TEMP M10	A	T0027A	257
CETM13	IN CORE TEMP M13	A	T0028A	258
CETM05	IN CORE TEMP M05	A	T0025A	255
CETN02	IN CORE TEMP N02	A	T0060A	290
CETN08	IN CORE TEMP N08	A	T0029A	259
CETN09	IN CORE TEMP N09	A	T0061A	291
CETP03	IN CORE TEMP P03	A	T0030A	5071
CETP05	IN CORE TEMP P05	A	T0031A	261
CETP07	IN CORE TEMP P07	A	T0062A	292
CETP12	IN CORE TEMP P12	A	T0063A	293
CETP13	IN CORE TEMP P13	A	T0032A	5055
CETR08	IN CORE TEMP R08	A	T0033A	263
C[illegible]0	IN CORE TEMP R10	A	T0065A	295
CE[illegible]5	IN CORE TEMP R05	A	T0064A	294
CNMT I 1	CNMT IODINE MONITOR CH1	A	Y9035A	126
CNMT I 2	CNMT IODINE MONITOR CH2	A	Y9036A	127
COMP RTD 1		A	Y8010A	50
COMP RTD 2		A	Y8011A	51
CON VAC P	LOW CONDENSER VACUUM TRIP	D	Y9037D	734
COND 31	CONDENSATE PMP 31 STATUS	D	CP31D	1236
COND 32	CONDENSATE PMP 32 STATUS	D	CP32D	1237
COND 33	CONDENSATE PMP 33 STATUS	D	CP33D	1238
COOL DR 31	RE COOL DR PMP 31 STAT	D	RCDP31D	840
COOL DR 32	RE COOL DR PMP 32 STAT	D	RCDP32D	841
CR GAS	CONTROL ROOM GAS MON	A	Y9040A	376
CR MAN TRI	CONTROL ROOM MANUAL TRIP	D	Y9061D	740
CR PART	CONTROL ROOM PARTICULATE MON	A	Y9039A	375
CRB06	CONT ROD BNK D GROUP 1 POS B06	A	C0025A	25
CRB10	CONT ROD BNK D GROUP 1 POS B10	A	C0022A	22
CRBA IN P	CONT ROD BNK A STEP IN PULSE	D	C0001D	391
CRBA OUT P	CONT ROD BNK A STEP OUT PULSE	D	C0002D	392
CRBB IN P	CONT ROD BNK B STEP IN PULSE	D	C0003D	393
CRBB OUT P	CONT ROD BNK B STEP OUT PULSE	D	C0004D	394
CRBC IN P	CONT ROD BNK C STEP IN PULSE	D	C0005D	395
CRBC OUT P	CONT ROD BNK C STEP OUT PULSE	D	C0006D	396
CRBD OUT P	CONT ROD BNK D STEP OUT PULSE	D	C0008D	398
CRC03	CONT ROD BNK C GROUP 1 POS C03	A	C0013A	13
CRC05	CONT ROD BNK A GROUP 2 POS C05	A	C0005A	5
C[illegible]	CONT ROD BNK A GROUP 1 IN POS C11	A	C0002A	2
CR[illegible]	CONT ROD C GROUP 1 POS C13	A	C0014A	14

3 NIC

INST	DESCRIPT	A	COMPNO	CENO
CRD08	CONT ROD BNK B GROUP 1 POS D08	A	C0009A	9
CR[illegible]	CONT ROD BNK A GROUP 2 POS E13	A	C0006A	6
CR[illegible]	CONT ROD BNK A GROUP 1 POS E03	A	C0001A	1
CRF02	CONT ROD BNK D GROUP 1 POS F02	A	C0021A	21
CRF08	CONT ROD BNK C GROUP 2 POS F08	A	C0018A	18
CRF14	CONT ROD BNK D GROUP 2 POS F14	A	C0026A	26
CRH04	CONT ROD BNK B GROUP 2 POS H04	A	C0011A	11
CRH06	CONT ROD BNK C GROUP 2 POS H06	A	C0017A	17
CRH08	CONT ROD BNK D GROUP 2 POS H08	A	C0029A	29
CRH10	CONT ROD BNK C GROUP 2 POS H10	A	C0019A	19
CRH12	CONT ROD BNK B GROUP 2 POS H12	A	C0012A	12
CRK02	CONT ROD BNK D GROUP 2 POS K02	A	C0028A	28
CRK08	CONT ROD BNK C GROUP 2 POS K08	A	C0020A	20
CRK14	CONT ROD BNK D GROUP 1 POS K14	A	C0023A	23
CRL03	CONT ROD BNK 1 GROUP 2 POS LO3	A	C0008A	8
CRL13	CONT ROD BNK A GROUP 1 POS L13	A	C0003A	3
CRM08	CONT ROD BNK B GROUP 1 POS M08	A	C0010A	10
CRN03	CONT ROD BNK C GROUP 1 POS N03	A	C0016A	16
CRN11	CONT ROD BNK A GROUP 2 POS N11	A	C0007A	7
CRN13	CONT ROD BNK C GROUP 1 POST N13	A	C0015A	15
CRNO5	CONT ROD BNK A GROUP 1 POS NO5	A	C0004A	4
CRP06	CONT ROD BNK D GROUP 1 POS P06	A	C0024A	24
CRP10	CONT ROD BNK D GROUP 2 POS P10	A	C0027A	27
CV125	EXCESS LETDOWN 3-WAY DIVERS	D	ZH215D	934
CV1369A	RHR X-CONN TO SIS	D	ZL1869A	1006
CV1810	RWST TO SI PUMPS	D	ZL1810	982
CV[illegible]5A	FROM BORON INJ. AUX & MN	D	ZH1835AD	1279
CV[illegible]5B	FROM BORON INJ. AUX & MN	D	ZH1835BD	1280
CV1852A	TO BORON INJ. AUX & MN	D	ZH1852AD	1282
CV1852B	TO BORON INJ. AUX & MN	D	ZH1852BD	1283
CV1869B	RHR X-CONN TO SIS	D	ZL1869B	1007
CV200A	LETDOWN FLOW CONTROL VALVE	D	ZH200AD	916
CV200B	LETDOWN FLOW CONTROL VALVE	D	ZH200BD	918
CV200C	LETDOWN FLOW CONTROL VALVE	D	ZH200CD	920
CV201	LETDOWN CNMT ISOLATION VALV	D	ZL201D	924
CV202	LETDOWN CNMT ISOLATION VALV	D	ZL202D	926
CV204A	CHARGING LINE LOOP 1 COLD LEG	D	ZH204AD	929
CV204B	CHARGING LINE LOOP 1 HOT LEG	D	ZH204BD	930
CV212	CHARGING TO AUX SPRAY-VALVE	D	ZH212D	931
CV213A	EXCESS LETDOWN VALVES	D	ZH213AD	932
CV213B	EXCESS LETDOWN VALVES	D	ZH213BD	933
CV519	PW CONT ISO VLV	D	ZL519D	1053
CV523	PZR RELIEF TK DRAIN	D	ZH523D	1054
CV535	STOP VALVES	D	ZH535D	1055
CV536	STOP VALVES	D	ZH536D	1056
CV552	PZR CONT ISO VLV	D	ZL552D	1060
CV560	PZR RELIEF TK SPRAY	D	ZH560D	1061
CV730	RHR HOT LEG RETURN	D	ZL0730	992
CV731	RHR HOT LEG RETURN	D	ZL0731	993
CV745A	RECIRC RHR X-CONN	D	ZL745A	978
CV745B	RECIRC RHR X-CONN	D	ZL745B	979
CV842	SI PMPS TO RWT	D	ZH842D	1080
C[illegible]	SI PMPS TO RWT	D	ZH843D	1081
CV[illegible]1A	SI PUMPS OUT	D	ZH851AD	1082

INST	DESCRIPT	A	COMPNO	CENO
CV851B	SI PUMPS OUT	D	ZH851BD	1084
CV[illegible]B	WRT TO CNMT SUMP	D	ZH855BD	1103
CV[illegible]A	CNMT SPRAY PUMP TO SPRAY	D	ZH866AD	1099
CV866B	CNMT SPRAY PUMP TO SPRAY	D	ZH866BD	1100
CV876A	CHEMICAL ADD TANK TO CNMT SPRAY	D	ZL876A	989
CV876B	CHEMICAL ADD TANK TO CNMT SPRAY	D	ZL876B	990
CV882	RWT TO RES HEAT REM PMPS	D	ZH882D	1101
CV883	BYP PAST RHR PMPS TO RWT	D	ZH883D	1102
CV885A	WRT TO CNMT SUMP	D	ZH855AD	1085
CV887A	RWST TO SI PUMP 32	D	ZL887A	980
CV887B	RWST TO SI PUMP 32	D	ZL887B	981
CV888A	COLD TO SI PMPS	D	ZH888AD	1104
CV888B	COLD TO SI PMPS	D	ZH888BD	1105
CV894A	ACCUM TK #31 TO COLD LEGS	D	ZH894AD	1111
CV894B	ACCUM TK #32 TO COLD LEGS	D	ZH894BD	1112
CV894C	ACCUM TK #33 TO COLD LEGS	D	ZH894CD	1113
CV894D	ACCUM TK #34 TO COLD LEGS	D	ZH894DD	1114
DG31	EMERGENCY DIESEL GEN #1	D	SED1D	791
DG31STAT	DIESEL GENERATOR 31 STATUS	D	DG31D	953
DG32	EMERGENCY DIESEL GEN #2	D	SED2D	792
DG32STAT	DIESEL GENERATOR 32 STATUS	D	DG32D	954
DG33	EMERGENCY DIESEL GEN #3	D	SED3D	793
DG33STAT	DIESEL GENERATOR 33 STATUS	D	DG33D	955
FC 31 STAT	CNMT RECIRC FAN 31 STATUS	D	FCM31	1207
FC32 STAT	CNMT RECIRC FAN 32 STATUS	D	FCM32	1208
FC33 STAT	CNMT RECIRC FAN 33 STATUS	D	FCM33	1209
F[illegible]STAT	CNMT RECIRC FAN 34 STATUS	D	FCM34	1210
FC[illegible]STAT	CNMT RECIRC FAN 35 STATUS	D	FCM35	1211
FC419A	STM LINE A HI F1 SI /RE	D	F0406D	419
FC419B	STM LINE A HI F2 SI /RE	D	F0407D	420
FC419G	STM LINE A HI F1 TR T /PERM	D	F0408D	421
FC429A	STM LINE B HI F1 SI /RE	D	F0426D	429
FC429B	STM LINE B HI F2 SI /RE	D	F0427D	430
FC439A	STM LINE C HI F1 SI /RE	D	F0446D	439
FC439B	STM LINE C HI F2 SI /RE	D	F0447D	440
FC449A	STM LINE D HI F1 SI /RE	D	F0466D	449
FC449B	STM LINE D HI F2 SI /RE	D	F0467D	450
FC856B	SI TO HOT LEG #3 VALVE	D	ZH856BD	1087
FC948D	CONTAINMENT HI P1 SI PART RE	D	P1000D	616
FCV1115	MAIN FEED PUMP 31 DCT SUCTION	D	ZL1115D	975
FCV1116	MAIN FEED PUMP 32 DCT SUCTION	D	ZL1116D	976
FCV111A	PMW TO BLENDER VALVE	A	ZT111AA	889
FCV1150	CONDENSATE EMER BYPASS	D	ZH1150D	1198
FCV1170	PURGE SUPPLY DCT VENT SYS	D	ZL1170D	1203
FCV1171	PURGE SUPPLY DCT VENT SYS	D	ZL1171D	1204
FCV1172	PURGE EXHAUST DUCT SYS	D	ZL1172D	1205
FCV1173	PURGE EXHAUST DUCT SYS	D	ZL1173D	1206
FCV1410	AUTO SEAL WATER *OPENS*	D	ZH1410D	5120
FCV1413	AUTO SEAL WATER *OPENS*	D	ZH1413D	5105
FCV405A	AUX FEED TO SG #31	A	ZH405AD	941
FCV405B	AUX FEED TO SG #32	A	ZH405BD	942
FCV405C	AUX FEED TO SG #33	A	ZH405CD	943
F[illegible]5D	AUX FEED TO SG #34	A	ZH405DD	944
FC[illegible]6A	AUX FEED TO SG #31	A	ZH406AD	949

INST	DESCRIPT	A	COMPNO	CENO
FCV406B	AUX FEED TO SG #32	A	ZH406BD	950
FCV406C	AUX FEED TO SG #33	A	ZH406CD	951
FCV406D	AUX FEED TO SG #34	A	ZH406DD	952
FCV417	SG #31 FEED WATER CONTROL VALVE	A	ZT417A	969
FCV427	SG #32 FEED WATER CONTROL VALVE	A	ZT427A	988
FCV437	SG #33 FEED WATER CONTROL VALVE	A	ZT437A	1004
FCV447	SG #34 FEED WATER CONTROL VALVE	A	ZT447A	1023
FCV625	RET FROM RCP T BARRIER	D	ZH625D	1062
FCV784	RET FROM MOTOR BEARING	D	ZH784D	1069
FCV786	RET FROM MOTOR BEARING	D	ZH786D	1070
FCV789	RET FROM RCP 1 BARRIER	D	ZH789D	1071
FSB GAS	FUEL STORAGE BLDG PARTICLE MON	A	Y9045A	379
FSB GAS	FUEL STORAGE BLDG GAS MON	A	Y9048A	380
FT110	BORIC ACID PULSE F	D	F0110D	411
FT111	PRIMARY MAKE UP WATER PULSE F	D	F0111D	412
FT1121	FLOW TO FAN COOLER 31	A	F1121A	1009
FT1122	FLOW TO FAN COOLER 32	A	F1122A	1010
FT1123	FLOW TO FAN COOLER 33	A	F1123A	1011
FT1124	FLOW TO FAN COOLER 34	A	F1124A	1012
FT1125	FLOW TO FAN COOLER 35	A	F1125A	1013
FT1200	AUX FD FLOW TO SG #31	A	F1200A	5102
FT1201	AUX FD FLOW TO SG #32	A	F1201A	5116
FT1202	AUX FEED FLOW TO STEAM GENERATOR 34	A	F1202A	5080
FT1203	AUX FEED FLOW TO STEAM GENERATOR 33	A	F1203A	5081
FT128	CHARGING PUMP DISCHARGE FLOW	A	F0128A	62
FT134	LETDOWN FLOW	A	F0134A	63
FT[illegible]	REACTOR COOLANT LOOP #1 F	A	F0400A	64
FT[illegible]	REACTOR COOLANT LOOP #1 F	A	F0401A	65
FT416	REACTOR COOLANT LOOP #1 F	A	F0402A	66
FT418A	MAIN FD FLOW TO SG #31	A	F0403A	67
FT418B	MAIN FD FLOW TO SG #31	A	F0404A	68
FT419A	SG #31 STEAM FLOW	A	F0405A	69
FT419B	SG #31 STEAM FLOW	A	F0406A	70
FT424	REACTOR COOLANT LOOP #2 F	A	F0420A	71
FT425	REACTOR COOLANT LOOP #2 F	A	F0421A	72
FT426	REACTOR COOLANT LOOP #2 F	A	F0422A	73
FT428A	MAIN FD FLOW TO SG #32	A	F0423A	74
FT428B	MAIN FD FLOW TO SG #32	A	F0424A	75
FT429A	SG #32 STEAM FLOW	A	F0425A	76
FT429B	SG #32 STEAM FLOW	A	F0426A	77
FT434	REACTOR COOLANT LOOP #3 F	A	F0440A	78
FT435	REACTOR COOLANT LOOP #3 F	A	F0441A	79
FT436	REACTOR COOLANT LOOP #3 F	A	F0442A	80
FT438A	MAIN FD FLOW TO SG #33	A	F0443A	81
FT438B	MAIN FD FLOW TO SG #33	A	F0444A	82
FT439A	SG #33 STEAM FLOW	A	F0445A	83
FT439B	SG #33 STEAM FLOW	A	F0446A	84
FT444	REACTOR COOLANT LOOP #4 F	A	F0460A	85
FT445	REACTOR COOLANT LOOP #4 F	A	F0461A	86
FT446	REACTOR COOLANT LOOP #4 F	A	F0462A	87
FT448A	MAIN FD FLOW TO SG #34	A	F0463A	88
FT448B	MAIN FD FLOW TO SG #34	A	F0464A	89
FT[illegible]A	SG #34 STEAM FLOW	A	F0465A	90
FT[illegible]B	SG #34 STEAM FLOW	A	F0466A	91

INST	DESCRIPT	A	COMPNO	CENO
FT601A	COMPONENT CLNG WTR HX OUT LOOP A	A	F0619A	94
FT[illegible]B	COMPONENT CLNG WTR HX OUT LOOP B	A	F0620A	95
FT[illegible]	RESIDUAL HEAT LOOP 1 FLOW	A	F0626A	96
FT640	RESIDUAL HEAT LOOP 2 FLOW	A	F0627A	97
FT925	SI BORONATED FLOW TO COLD LEG #2	A	F9250A	1121
FT926	SI FLOW TO COLD LEG #1	A	F9260A	5098
FT926A	SI BORONATED FLOW TO COLD LEG #3	A	F926AA	5099
FT927	SI BORONATED FLOW TO COLD LEG #4	A	F9270A	1124
FT930	CHEMICAL ADD FLOW TO CNMT SPRAYS	A	F0930A	991
FT945A	CNMT SPRAY HEADS FLOW	A	F945AA	1144
FT945B	CNMT SPRAY HEADS FLOW	A	F945BA	1145
FT946A	RHR H/X REC TO COLD LEG #4 FLOW	A	F946AA	5100
FT946B	RHR H/X REC TO COLD LEG #3 FLOW	A	F946BA	1147
FT946C	RHR H/X REC TO COLD LEG #2 FLOW	A	F946CA	5101
FT946D	RHR H/X REC TO COLD LEG #1 FLOW	A	F946DA	1149
FT980	SI FLOW TO COLD LEG #3	A	F9800A	1165
FT981	SI FLOW TO COLD LEG #2	A	F9810A	1166
FT982	SI FLOW TO COLD LEG #4	A	F9820A	1167
FV1802A	RE CIRC SUMP PUMP VLV	D	ZH1802AD	1272
FV1802B	RE CIRC SUMP PUMP VLV	D	ZH1802BD	1273
FV746	COLD LEGS 3 AND 4 SI	D	ZH746D	1066
FV747	COLD LEGS 1 AND 2 SI	D	ZH747D	1067
FV856C	SI BORATED TO COLD LEG #4 VALVE	D	ZH856CD	1089
FV856E	SI BORATED TO COLD LEG #1 VALVE	D	ZH856ED	1091
FV856G	SI BORATED TO HOT LEG #1 VALVE	D	ZH856GD	1093
FV856H	SI TO COLD LEG #3 VALVE	D	ZH856HD	1094
FV[illegible]J	SI TO COLD LEG #2 VALVE	D	ZH856JD	1095
FV[illegible]A	CNMT SPRAY HEADERS	D	ZH889AD	1106
FV889B	CNMT SPRAY HEADERS	D	ZH889BD	1109
FWX12	FEEDWATER ISO SIGNAL	D	SFWIBD	5104
FWX2	FEEDWATER ISO SIGNAL	D	SFWIAD	5118
GEN 86BU	GENERATOR 86BU LOCKOUT RELAY	D	Y9039D	736
GEN 86P	GENERATOR 86P LOCKOUT RELAY	D	Y9040D	737
GROSS MW	UNIT GENERATOR GROSS MW	A	Q0340A	209
HATCH IN	PERSONNEL HATCH INNER DOOR	D	SPL2D	836
HATCH OUT	PERSONNEL HATCH OUTER DOOR	D	SPL1D	835
HC-MCA	CONTAINMENT H2 CONCENTRATION	A	HCMCA	5111
HC-MCB	CONTAINMENT H2 CONCENTRATION	A	HCMCB	5125
HC104	BA TANK #31 RETURN VALVE	A	ZT104A	880
HC105	BA TANK #32 RETURN VALVE	A	ZT105A	881
HCV123	EXCESS LETDOWN HX DISCHARGE	A	ZT123A	898
HCV133	RHR CONN TO LETDOWN LINE	A	ZH133D	903
HCV142	CHARGING REGULATING VALVE	A	ZT142A	913
HCV638	DISCHARGE VALVE RHR H/X	D	ZH638D	964
HCV640	DISCHARGE VALVE RHR H/X	D	ZH640D	965
ICMD REC	IN CORE MOV DET RECORD	D	Y0039D	652
ICMD SCAN	IN CORE MOV DET SCAN	D	Y0038D	651
ICMDA	IN CORE MOVABLE DETECTOR A FLUX	A	N0001A	120
ICMDB	IN CORE MOVABLE DETECTOR B FLUX	A	N0002A	121
ICMDC	IN CORE MOVABLE DETECTOR C FLUX	A	N0003A	122
ICMDD	IN CORE MOVABLE DETECTOR D FLUX	A	N0004A	123
ICMDE	IN CORE MOVABLE DETECTOR E FLUX	A	N0005A	124
IC[illegible]	IN CORE MOVABLE DETECTOR F FLUX	A	N0006A	125
IV[illegible]2	RCDT TO WDS. HLD UP TK IV	D	ZL1702D	1256

INST	DESCRIPT	A	COMPNO	CENO
IV1705	RCDT TO WDS. HLD UP TK IV	D	ZL1705D	1259
IV[illegible]3	CNMT SUMPS TO WDS. HLD TL IV	D	ZL1723D	1260
IV[illegible]8	CNMT SUMPS TO WDS. HLD TL IV	D	ZL1728D	1267
IV1786	RCDT VENT HEADER IV	D	ZL1786D	1268
IV1787	RCDT VENT HEADER IV	D	ZL1787D	1269
IV222	RCP WATER SEAL RETURN	D	ZH222D	935
IV2A	O2 MAKEUP	D	ZH2AD	861
IV2B	O2 MAKEUP	D	ZH2BD	862
IV959	RHR SAMPLE	D	ZL959D	1164
LC459B	PRESSURIZER LO L1 SI PART RE	D	L0484D	489
LC460B	PRESSURIZER LO L2 SI PART RE	D	L0485D	490
LC461B	PRESSURIZER LO L3 SI PART RE	D	L0486D	491
LCV112A	VCT HOLDUP 3-WAY DIVERSION	D	ZH112AD	893
LCV112C	VCT DISCHARGE VALVE	D	ZH112CD	895
LCV459	LETDOWN ISOLATION VALVE	D	ZH459D	1038
LCV460	LETDOWN ISOLATION VALVE	D	ZH460D	1039
LEFM31	RCLA FW FLOW FROM LEFM	A	Y9008A	102
LEFM32	RCLB FW FLOW FROM LEFM	A	Y9009A	106
LEFM33	RCLC FW FLOW FROM LEFM	A	Y9010A	110
LEFM34	RCLD FW FLOW FROM LEFM	A	Y9011A	114
LOCK IN	PERSONNEL LOCKS INNER DOOR	D	SPL4D	838
LOCK OUT	PERSONNEL LOCKS OUTER DOOR	D	SPL3D	837
LT102	BORIC ACID TANK #31 LEVEL	A	L0102A	879
LT106	BORIC ACID TANK #32 LEVEL	A	L0106A	882
LT112	VOLUME CONTROL TANK LEVEL	A	L0112A	98
LT1128	CONDENSATE STORAGE TANK LEVEL	A	L1128A	892
LT[illegible]8A	CONDENSATE STORAGE TANK LEVEL	A	L1128AA	5082
LT[illegible]1	RECIRCULATION SUMP LEVEL	A	L1251	5108
LT1252	RECIRCULATION SUMP LEVEL	A	L1252A	5122
LT1253	CONTAINMENT LEVEL	A	L1253A	5109
LT1254	CONTAINMENT LEVEL	A	L1254A	5123
LT1255	CONTAINMENT SUMP LEVEL	A	L1255A	5110
LT1256	CONTAINMENT SUMP LEVEL	A	L1256A	5124
LT1310	UPPER REACTOR VESSEL RANGE	A	LR002B	5112
LT1311	REACTOR VESSEL N.R. LEVEL	A	LR003B	5113
LT1312	REACTOR VESSEL W.R. LEVEL	A	LR004B	5114
LT1320	UPPER REACTOR VESSEL RANGE	A	LR002A	5126
LT1321	REACTOR VESSEL N.R. LEVEL	A	LR003A	5127
LT1322	REACTOR VESSEL W.R. LEVEL	A	LR004A	5128
LT417A	STM GEN #31 LVL NR	A	L0400A	99
LT417B	STM GEN #31 LVL NR	A	L0401A	100
LT417C	STM GEN #31 LVL NR	A	L0402A	101
LT417D	STM GENERATOR #31 W.R. LEVEL	A	L0403A	5005
LT427A	STM GEN #32 LVL NR	A	L0420A	103
LT427B	STM GEN #32 LVL NR	A	L0421A	104
LT427C	STM GEN #32 LVL NR	A	L0422A	105
LT427D	STEAM GENERATOR #32 W.R. LEVEL	A	L0423A	5006
LT437A	STM GEN #33 LVL NR	A	L0440A	107
LT437B	STM GEN #33 LVL NR	A	L0441A	108
LT437C	STM GEN #33 LVL NR	A	L0442A	109
LT437D	STEAM GENERATOR #33 W.R. LEVEL	A	L0443A	5007
LT447A	STM GEN #34 LVL NR	A	L0460A	111
LT[illegible]B	STM GEN #34 LVL NR	A	L0461A	112
LT[illegible]C	STM GEN #34 LVL NR	A	L0462A	113

INST	DESCRIPT	A	COMPNO	CENO
LT447D	STEAM GENERATOR #34 W.R. LEVEL	A	L0463A	5008
LT[illegible]	PRESSURIZER 1 LEVEL	A	L0480A	5013
L[illegible]	PRESSURIZER 2 LEVEL	A	L0481A	5014
LT4[illegible]	PRESSURIZER 3 LEVEL	A	L0482A	117
LT462	PRESSURIZER LEVEL SETPOINT	A	L0483A	118
LT470	PRESSURIZER RELIEF TANK LVL	A	L0485A	119
LT628	CCW SURGE TANK 31 LEVEL	A	L0628A	1141
LT629	CCW SURGE TANK 32 LEVEL	A	L0629A	1142
LT920	RWST LEVEL	A	L0933A	5097
LT931	CHEMICAL SPRAY ADDITIVE TANK LVL	A	L0931A	995
LT934A	ACCUM TK #31 LEVEL	A	L934AA	1125
LT934B	ACCUM TK #32 LEVEL	A	L934BA	1126
LT934C	ACCUM TK #33 LEVEL	A	L934CA	1127
LT934D	ACCUM TK #34 LEVEL	A	L934DA	1128
LT935A	ACCUM TK #31 LEVEL	A	L935AA	1129
LT935B	ACCUM TK #32 LEVEL	A	L935BA	1130
LT935C	ACCUM TK #33 LEVEL	A	L935CA	1131
LT935D	ACCUM TK #34 LEVEL	A	L935DA	1132
LT938	RECIRC SUMP LEVEL 4 IN	D	L0938D	1000
LT939	RECIRC SUMP LEVEL 10 IN	D	L0939D	1001
LT940	CNMT SUM LEVEL 4 IN	D	L0940D	1002
LT941	CNMT SUMP LEVEL 10 IN	D	L0941D	1003
LV791	EXCESS LETDOWN HX ISO VLV	D	ZL791D	1072
LV793	CCW TO EXCESS LETDOWN HX	D	ZL793D	1074
LV796	EXCESS LETDOWN HX ISO VLV	D	ZL796D	1077
LV798	EXCESS LETDOWN HX ISO VLV	D	ZL798D	1079
M[illegible]4	RHR PUMP DISCHARGE	D	ZL744D	1301
M[illegible]2B	RHR HX 31 RETURN	D	ZL822AD	1302
MECH OVSP	MECHANICAL OVERSPEED TRIP	D	Y9059D	738
MOV1870	RHR RECIRC H/X TO PUMPS	D	ZH1870D	967
MOV333	EMERGENCY BORATE VALVE	D	ZT333A	938
MOV743	RHR RECIRC TO PUMPS	D	ZH743D	966
MOV769	ESSENTIAL CCW LOOP ISO VLV-PH B	D	ZH769D	5106
MOV797	ESSENTIAL CCW LOOP ISO VLV-PB B	D	ZH797D	5119
MOV822B	RHR HX 32 RETURN	D	ZL822BD	1303
MS-1-31	MAIN STEAM ISOLATION	D	ZH131SD	852
MS-1-32	MAIN STEAM ISOLATION	D	ZH132SD	853
MS-1-33	MAIN STEAM ISOLATION	D	ZH133SD	854
MS-1-34	MAIN STEAM ISOLATION	D	ZH134SD	855
MS1	MAIN STEAM ISO ACT SIGNAL	D	SMSA1D	5015
MS11	MAIN STEAM ISO ACT SIGNAL	D	SMSA2D	5016
N&TB PWR	NUCLEAR & TB PWR RE TR P7 PERM	D	Y0003D	640
N31	SOURCE RANGE DETECTOR	A	N0031A	5017
N32	SOURCE RANGE DETECTOR	A	N0032A	5018
N35	INTERMEDIATE RANGE DETECTOR	A	N0035A	5019
N36	INTERMEDIATE RANGE DETECTOR	A	N0036A	5020
N41	POWER RANGE 1 TOP DETECTOR Q	A	N0041A	130
N41	POWER RANGE 1 BOT DETECTOR Q	A	N0042A	131
N41	POWER RANGE CHANNEL 1 Q	A	N0049A	5021
N42	POWER RANGE 2 TOP DETECTOR Q	A	N0043A	132
N42	POWER RANGE 2 BOT DETECTOR Q	A	N0044A	133
N42	POWER RANGE CHANNEL 2 Q	A	N0050A	5022
N[illegible]	POWER RANGE 3 TOP DETECTOR Q	A	N0045A	134
N[illegible]	POWER RANGE 3 BOT DETECTOR Q	A	N0046A	135

INST	DESCRIPT	A	COMPNO	CENO
N43	POWER RANGE CHANNEL 3 Q	A	N0051A	5095
N4[illegible]	POWER RANGE 4 TOP DETECTOR Q	A	N0047A	136
N4[illegible]	POWER RANGE 4 BOT DETECTOR Q	A	N0048A	137
N44	POWER RANGE CHANNEL 4 Q	A	N0052A	5096
NC31D	SOURCE RNG 1 HI Q CAUS RE	D	N0030D	513
NC32D	SOURCE RNG 2 HI Q CAUS RE	D	N0031D	514
NC35D	INTERM RNG 1 RE TR P6 /BLK	D	N0032D	515
NC35F	INTERM RNG 1 HI Q CAUS RE	D	N0020D	509
NC36D	INTERM RNG 2 RE TR P6 /BLK	D	N0033D	516
NC36F	INTERM RNG 2 HI Q CAUSE RE	D	N0021D	510
NC41M	NUCL PWR 1 RE TR PIO /PERM	D	N0011D	502
NC41N	RCL LO F1 LOOP TR P8 /PERM	D	F0495D	455
NC41P	PWR RNG CHANNEL 1 LO Q /RE	D	N0006D	497
NC41R	PWR RNG CHANNEL 1 HI Q /RE	D	N0001D	492
NC42M	NUCL PWR 2 RE TR PIO /PERM	D	N0012D	503
NC42N	RCL LO F2 LOOP TR P8 /PERM	D	F0496D	457
NC42R	PWR RNG CHANNEL 2 HI Q /RE	D	N0002D	493
NC43M	NUCL PWR 3 RE TR PIO /PERM	D	N0013D	504
NC43N	RCL LO F3 LOOP TR P8 /PERM	D	F0497D	458
NC43P	PWR RNG CHANNEL 3 LO Q PART RE	D	N0008D	499
NC43R	PWR RNG CHANNEL 3 HI Q /RE	D	N0003D	494
NC44M	NUCL PWR 4 RE TR PIO /PERM	D	N0014D	505
NC44N	RCL LO F4 LOOP TR P8 /PERM	D	F0498D	459
NC44P	PWR RNG CHANNEL 4 LO Q PART RE	D	N0009D	500
NC44R	PWR RNG CHANNEL 4 HI Q /RE	D	N0004D	495
OVR TR A	REDUNDANT OVERSPEED TRAIN A	D	Y9063D	742
OV[illegible]R B	REDUNDANT OVERSPEED TRAIN B	D	Y9062D	741
OV[illegible]R DT	RCL OVERPWR DT CAUS RE	D	T0499D	632
OVRTEM DT	RCL OVERTEMP DT CAUS RE	D	T0498D	631
P413J	OPS CHANNEL 1 ACTUAL PRESS	A	Y9056A	384
P413K	OPS CHANNEL 1 PROGRAMMED PRESS	A	Y9054A	382
P413M	OPS CHANNEL 1 DP PRESS	A	Y9055A	383
P433J	OPS CHANNEL 2 PROGRAMMED PRESS	A	Y9057A	385
P433K	OPS CHANNEL 2 ACTUAL PRESS	A	Y9059A	387
P433M	OPS CHANNEL 2 DP PRESS	A	Y9058A	386
P443J	OPS CHANNEL 4 PROGRAMMED PRESS	A	Y9060A	388
P443K	OPS CHANNEL 4 ACTUAL PRESS	A	Y9062A	390
P443M	OPS CHANNEL 4 DP PRESS	A	Y9061A	389
P472	PRESSURIZER LO P2 PART RE	D	P0485D	604
PAB I 3	PAB OVERHEAD IODINE MONITOR CH3	A	Y9037A	128
PAB I 4	PAB BLOWDOWN IODINE MONITOR CH4	A	Y9038A	129
PC419A	STM LINE A HI DP1 SI /RE	D	P0404D	583
PC419B	STM LINE A DP2 SI /RE	D	P0405D	584
PC419C	STM LINE A HI DP3 SI /RE	D	P0406D	585
PC419D	STM LINE B HI DP 2 SI /RE	D	P0425D	588
PC419E	STM LINE C HI DP 1 SI /RE	D	P0444D	591
PC419F	STM LINE D HI DP 1 SI /RE	D	P0464D	595
PC429A	STM LIN B HI DP 1 SI /RE	D	P0424D	587
PC429C	STM LINE D HI DP 2 SI /RE	D	P0465D	596
PC429G	STM LINE B HI DP 3 SI /RE	D	P0426D	589
PC429H	STM LINE C HI DP 2 SI /RE	D	P0445D	592
PC439A	STM LINE C HI F1 TR T /PERM	D	F0448D	441
PC[illegible]C	STM LINE C HI DP 3 SI /RE	D	P0446D	593
PC[illegible]D	STM LINE D HI DP 3 SI /RE	D	P0466D	597

INST	DESCRIPT	A	COMPNO	CENO
PC449A	STM LINE D HI F1 TR T /PERM	D	F0468D	451
PC[illegible]C	PRESSURIZER LO P1 SI TR /BLK	D	P0492D	611
PC[illegible]E	PRESSURIZER LO P1 SI PART RE	D	P0489D	608
PC455G	PRESSURIZER SPRAY CONT A SP	A	F0483A	92
PC455H	PRESSURIZER SPRAY CONT B SP	A	F0484A	93
PC455L	PRESSURIZER MODULATING HTR K	A	S455LA	805
PC456C	PRESSURIZER LO P2 SI TR /BLK	D	P0493D	612
PC456E	PRESSURIZER LO P2 SI PART RE	D	P0490D	609
PC457C	PRESSURIZER LO P3 SI TR /BLK	D	P0494D	613
PC457E	PRESSURIZER LO P3 SI PART RE	D	P0491D	610
PC929E	STM LINE B HI F1 TR T /PERM	D	F0428D	431
PC948E	CONTAINMENT HI P2 SI PART RE	D	P1001D	617
PC948F	CONTAINMENT HI P3 SI PART RE	D	P1002D	618
PCV1120	STEAM DUMP VALVE	D	ZL1120	860
PCV1121	STEAM DUMP VALVE	D	ZL1121	863
PCV1122	STEAM DUMP VALVE	D	ZL1122	864
PCV1123	STEAM DUMP VALVE	D	ZL1123	865
PCV1124	STEAM DUMP VALVE	D	ZL1124	866
PCV1125	STEAM DUMP VALVE	D	ZL1125	868
PCV1126	STEAM DUMP VALVE	D	ZL1126	869
PCV1127	STEAM DUMP VALVE	D	ZL1127	870
PCV1128	STEAM DUMP VALVE	D	ZL1128	871
PCV1129	STEAM DUMP VALVE	D	ZL1129	872
PCV1130	STEAM DUMP VALVE	D	ZL1130	873
PCV1131	STEAM DUMP VALVE	D	ZL1131	874
PCV1134	SG #31 PORV	A	ZT1134A	1193
PC[illegible]35	SG #32 PORV	A	ZT1135A	1194
PC[illegible]36	SG #33 PORV	A	ZT1136A	1195
PCV1137	SG #34 PORV	A	ZT1137A	1196
PCV1139	MAIN STM TO AUX FEED TURB PMP 32	D	ZH1139D	1197
PCV1190	CNMT PRESS RELIEF VLV	D	ZL1190D	1213
PCV1191	CNMT PRESS RELIEF VLV	D	ZL1191D	1214
PCV1192	CNMT PRESS RELIEF VLV	D	ZL1192D	1215
PCV1228	INSTRUMENT AIR	D	ZL1228D	1243
PCV1229	SJAE TO CNMT	D	ZL1229D	1244
PCV1230	SJAE TO CNMT	D	ZL1230D	1245
PCV1310A	TURBINE DRIVEN AUX FEED CNT VLV	D	ZH1310AD	962
PCV1310B	TURBINE DRIVEN AUX FEED CNT VLV	D	ZH1310BD	963
PCV135	LOW PRESSURE LETDOWN VALVE	A	ZH135D	904
PCV455C	POWER OP RELIEF VLV	D	ZH455CD	1034
PCV456	POWER OP RELIEF VLV	D	ZH456D	1036
PT1134-1	SG #34 MAIN STEAM THROTTLE	A	P1134A	1192
PT1134-2	SG #33 MAIN STEAM THROTTLE	A	P1135A	1191
PT1134-3	SG #32 MAIN STEAM THROTTLE	A	P1136A	1190
PT1134-4	SG #31 MAIN STEAM THROTTLE	A	P1137A	1189
PT1181	FEEDWATER PRESS SG #31	A	P0403A	187
PT1182	FEEDWATER PRESS SG #32	A	P0423A	191
PT1183	FEEDWATER PRESS SG #33	A	P0443A	195
PT1184	FEEDWATER PRESS SG #34	A	P0463A	199
PT1191	NSW PUMPS DISCHARGE HEADER PRESS	A	P1191A	1140
PT121	EXCESS LETDOWN HX DISCHARGE	A	P0121A	897
PT124	RCPD LABYRINTH SEAL WTR DIFF P	A	P0125A	174
PT[illegible]0	AUX FW PUMP #31 PRESS	A	P1260A	1252
PT[illegible]1	AUX FW PUMP #32 PRESS	A	P1261A	1250

INST	DESCRIPT	A	COMPNO	CENO
PT1262	AUX FW PUMP #33 PRESS	A	P1262A	1251
PT[illegible]	RCPC LABYRINTH SEAL WTR DIFF P	A	P0127A	175
PT[illegible]	NON REGEN HX LETDOWN OUTLET P	A	P0135A	178
PT139	VOLUME CONTROL TANK PRESSURE	A	P0139A	179
PT142	CHARG PMP DISCH HDR PRE	A	P0142A	180
PT1421	CONTAINMENT HIGH PRESSURE	A	P1421A	5107
PT1422	CONTAINMENT HIGH PRESSURE	A	P1422A	5121
PT145	RCPB LABYRINTH SEAL WTR DIFF P	A	P0129A	176
PT147	RCPA LABYRINTH SEAL WTR DIFF P	A	P0131A	177
PT402	RCS PRESSURE - LOOP 1	A	Y9007A	5023
PT403	RCS PRESSURE - LOOP 4	A	P0449A	5024
PT404	SG #31 TO SG #34 EQUALIZATION	A	P0404A	940
PT412A	TB FIRST STAGE 1 P	A	P0398A	182
PT412B	TB FIRST STAGE 2 P	A	P0399A	183
PT419A	STM GEN #31 MAIN STEAM PRESSURE	A	P0400A	5086
PT419B	STM GEN #31 MAIN STEAM PRESSURE	A	P0401A	185
PT419C	STM GEN #31 MAIN STEAM PRESSURE	A	P0402A	186
PT429A	STM GEN #32 MAIN STEAM PRESSURE	A	P0420A	5087
PT429B	STM GEN #32 MAIN STEAM PRESSURE	A	P0421A	189
PT429C	STM GEN #32 MAIN STEAM PRESSURE	A	P0422A	190
PT439A	STM GEN #33 MAIN STEAM PRESSURE	A	P0440A	192
PT439B	STM GEN #33 MAIN STEAM PRESSURE	A	P0441A	5088
PT439C	STM GEN #33 MAIN STEAM PRESSURE	A	P0442A	194
PT449A	STM GEN #34 MAIN STEAM PRESSURE	A	P0460A	196
PT449B	STM GEN #34 MAIN STEAM PRESSURE	A	P0461A	5089
PT449C	STM GEN #34 MAIN STEAM PRESSURE	A	P0462A	198
PT[illegible]	PRESSURIZER PRESSURE	A	P0480A	200
PT[illegible]	PRESSURIZER PRESSURE	A	P0481A	201
PT457	PRESSURIZED PRESSURE	A	P0482A	202
PT472	PRESSURIZER RELIEF TANK PRESS	A	P0485A	204
PT474	PRESSURIZER PRESSURE	A	P0483A	203
PT474	PRESSURIZER HI P CAUS RE	D	P0483D	602
PT922	SI PMPS DISCHARGE PRESS	A	P0922A	1117
PT923	SI PMPS DISCHARGE PRESS	A	P0923A	1118
PT924A	SI BORONATED FLOW TO COLD LEG #1	A	F924AA	1119
PT936A	ACCUM TK #31 PRESS	A	P936AA	1133
PT936B	ACCUM TK #32 PRESS	A	P936BA	1134
PT936C	ACCUM TK #33 PRESS	A	P936CA	1135
PT936D	ACCUM TK #34 PRESS	A	P936DA	1136
PT948A	CONTAINMENT PRESSURE LOOP 1A	A	P1000A	206
PT948B	CONTAINMENT PRESSURE LOOP 1B	A	P1001A	207
PT948C	CONTAINMENT PRESSURE LOOP 1C	A	P1002A	1143
PT949A	CONTAINMENT PRESSURE LOOP 2A	A	P1003A	1137
PT949B	CONTAINMENT PRESSURE LOOP 2B	A	P1004A	1138
PT949C	CONTAINMENT PRESSURE LOOP 2C	A	P1005A	1139
PWR RNG HI	PWR RNG CHANNEL HI Q CAUS RE	D	N0005D	496
PWR RNG LO	PWR RNG CHANNEL LO Q CAUS /RE	D	N0010D	501
PZR HTR 31	PRESSURIZER BACKUP GROUP #31	D	S455L1D	826
PZR HTR 32	PRESSURIZER BACKUP GROUP #32	D	S455L2D	810
PZR HTR 33	PRESSURIZER BACKUP GROUP #33	D	S455L3D	789
PZR L&P7	PRESSURIZER HI L & P7 CAUSE RE	D	L0483D	488
PZR LO P&L	PRESSURIZER LO P & L SI CAUS RE	D	Y0480D	728
PZ[illegible]P7	PRESSURIZER LO P & P7 CAUS RE	D	P0488D	607
PZ[illegible]RL1	PRESSURIZER HI L1 PART RE	D	L0480D	485

INST	DESCRIPT	A	COMPNO	CENO
Q412F	RC TEMP REF	A	T0496A	363
R1	CONTROL ROOM RAD	A	R0001A	5090
R[illegible]	STEAM LINE PENETRATIONS RAD	A	R0010A	5092
R11	CNMT AIR PARTICLE RADIATION	A	R0011A	5028
R12	CONTAINMENT GAS RADIATION	A	R0012A	5093
R13	PLANT VENT AIR PARTICLE RAD	A	R0013A	5029
R14	AUX BUILDING EXHAUST GAS RAD	A	R0014A	223
R15	STEAM AIR EJECT EXHAUST RAD	A	R0015A	5031
R16	CNMT CLNG HX SVC WTR OUT 1R	A	R0016A	224
R17A	CMPT CLG PUMP SUCT A HEADER RAD	A	R0020A	227
R17B	CMPT CLG PUMP SUCT B HEADER RAD	A	R0021A	228
R18	LIQUID WASTE DISPOSAL RADIATION	A	R0018A	225
R19	STM GENER BLOWDOWN DRAIN 2 RAD	A	R0019A	5094
R2	AREA 2 RADIATION	A	R0002A	211
R23	CNMT CLNG HX SVC WTR OUT 2R	A	R0029A	230
R25	CONTAINMENT HIGH RAD MONITOR 1	A	R0025A	5083
R26	CONTAINMENT HIGH RAD MONITOR 2	A	R0026A	5084
R27	PLANT VENT RADIATION	A	R0027A	5085
R4	CHARGING PUMP ROOM RAD	A	R0004A	213
R5	FUEL STORAGE BUILDING RAD	A	R0005A	5091
R6	SAMPLE ROOM RAD	A	R0006A	215
R7	IN CORE INS ROOM RAD	A	R0007A	216
R8	DRUMMING STATION RAD	A	R0008A	217
R9	WASTE DISPOSAL GAS ANALYZER RAD	A	R0028A	229
RAD GAS	RAD WASTE AREA GAS MON	A	Y9042A	378
RAD PAR	RAD WASTE AREA PARTICLE MON	A	Y9041A	377
R[illegible]OF	RCL LO F LOOP TR P8 /PERM	D	F0499D	460
R[illegible]OVRP	RCLA OVERPWR DT1 PART RE	D	T0400D	623
RCLB OVRP	RCLB OVERPWR DT1 PART RE	D	T0420D	625
RCLB OVRT	RCLB OVERTEMP DT1 /RE	D	T0423D	626
RCLC OVRP	RCLC OVERPWR DT1 PART RE	D	T0440D	627
RCLD OVRP	RCLD OVERPWR DT1 PART RE	D	T0460D	629
RCLD OVRT	RCLD OVERTEMP DT1 /RE	D	T0463D	630
RCP UV	RCP BUS UNDER VOLT CAUS RE	D	V0324D	637
RCP31	RCP #31 STATUS	D	S498AD	1049
RCP32	RCP #32 STATUS	D	S498BD	1050
RCP33	RCP #33 STATUS	D	S498CD	1051
RCP34	RCP #34 STATUS	D	S498DD	1052
RCPA I	RCP #31 CURRENT	A	CU31A	806
RCPA LOF	RCLA LO F CAUS RE	D	F0403D	416
RCPABKR OP	RCPA BKR OP CAUSE RE	D	Y0400D	720
RCPALSWBT	RCPA LOWER SEAL WTR BRG T	A	T0417A	318
RCPB I	RCP #32 CURRENT	A	CU32A	807
RCPB LOF	RCLB LO F CAUS RE	D	F0423D	426
RCPBBKR OP	RCPB BKR OP CAUSE RE	D	Y0420D	722
RCPBLSWBT	RCPB LOWER SEAL WTR BRG T	A	T0437A	330
RCPC I	RCP #33 CURRENT	A	CU33A	808
RCPC LOF	RCLC LO F CAUS RE	D	F0443D	436
RCPCBKR OP	RCPC BKR OP CAUSE RE	D	Y0440D	724
RCPCLSWBT	RCPC LOWER SEAL WTR BRG T	A	T0457A	342
RCPD I	RCP #34 CURRENT	A	CU34A	794
RCPD LOF	RCLD LO F CAUS RE	D	F0463D	446
R[illegible]KR OP	RCPD BKR OP CAUSE RE	D	Y0460D	726
R[illegible]SWBT	RCPD LOWER SEAL WTR BRG T	A	T0477A	354

INST	DESCRIPT	A	COMPNO	CENO
RECORDER 1		A	ATR1A	46
RECORDER 2		A	ATR2A	47
RECORDER 3		A	ATR3A	48
RECORDER 4		A	ATR4A	49
ROD DEV AL		D	RDAND	743
ROD DROP	POSITION ROD DROP	D	C0099D	410
ROD MOVE	CONT & SD ROD MOVE	D	C0098D	409
RX MAN TR1	REAC MANUAL TR1 CAUSE RE	D	Y0004D	641
RX MAN TR2	REAC MANUAL TR2 CAUSE RE	D	Y0005D	642
S0V1534	CNMT RAD MONITOR	D	ZL1234D	1246
SGA L&F	STM GEN A LO L & FW F CAUS RE	D	Y0401D	721
SGA L-L	STM GEN A LO LO L CAUS RE	D	L0406D	466
SGB L&F	STM GEN B LO L & FW F CAUS RE	D	Y0421D	723
SGB L-L	STM GEN B LO LO L CAUS RE	D	L0426D	472
SGC L-L	STM GEN C LO LO L CAUS RE	D	L0446D	478
SGC LF	STM GEN C LO L & FW F CAUS RE	D	Y0441D	725
SGD L&F	STM GEN D LO L & FW F CAUS RE	D	Y0461D	727
SGD L-L	STM GEN D LO LO L CAUS RE	D	L0466D	484
SI MAN 1	SAFETY INJ SET MANUAL 1 CAUS RE	D	Y0920D	731
SI MAN 2	SAFETY INJ SET MANUAL 2 CAUS RE	D	Y0921D	732
SI-10X	SI ACTUATION SIGNAL	D	SSI1D	5035
SI-20X	SI ACTUATION SIGNAL	D	SSI2D	5036
SIS 31	SIS PMP 31 STATUS	D	SIS31D	1294
SIS 32	SIS PMP 32 STATUS	D	SIS32D	1295
SIS 33	SIS PMP 33 STATUS	D	SIS33D	1296
SMP TK 31	CNMT RECIRC PMP 31 STATUS	D	STP31D	1297
SMP TK 32	CNMT RECIRC PUMP 32 STATUS	D	STP32D	1298
SOV1535	CNMT RAD MONITOR	D	ZL1235D	1247
SOV1536	CNMT RAD MONITOR	D	ZL1236D	1248
SPRAY 31	CNMT SPRAY PMP 31 STATUS	D	CSP31D	5117
SPRAY 32	CNMT SPRAY PMP 32 STATUS	D	CSP32D	5103
SRB08	SD ROD BNK C GROUP 1 POS B08	A	C0071A	55
SRBA IN P	SD ROD BNK A STEP IN PULSE	D	C0009D	399
SRBA OUT P	SD ROD BNK A STEP OUT PULSE	D	C0010D	400
SRBB IN P	SD ROD BNK B STEP IN PULSE	D	C0011D	401
SRBB OUT P	SD ROD BNK B STEP OUT PULSE	D	C0012D	402
SRBC IN P	SD ROD BNK C STEP IN PULSE	D	C0017D	405
SRBC OUT P	SD ROD BNK C STEP OUT PULSE	D	C0018D	406
SRBDINPUL	SD ROD BNK C GROUP 2 POS H10	D	C0019D	407
SRBDOUTPUL	SD ROD BNK D STEP OUT PULSE	D	C0020D	408
SRC07	SD ROD BNK B GROUP 2 POS C07	A	C0042A	42
SRC09	SD ROD BNK B GROUP 1 POS C09	A	C0039A	39
SRD04	SD ROD BNK A GROUP 1 POS D04	A	C0030A	30
SRD12	SD ROD BNK A GROUP 1 POS D12	A	C0031A	31
SRE09	SD ROD BNK A GROUP 2 POS E09	A	C0035A	35
SRF06	SD ROD BNK D GROUP 1 POS F06	A	C0074A	58
SRF10	SD ROD BNK D GROUP 1 POS F10	A	C0075A	59
SRG03	SD ROD BNK B GROUP 1 POS G03	A	C0038A	38
SRG05	SD ROD BNK A GROUP 2 POS G05	A	C0034A	34
SRG13	SD ROD BNK B GROUP 2 POS G13	A	C0043A	43
SRH02	SD ROD BNK C GROUP 1 POS H02	A	C0070A	54
SRH14	SD ROD BNK C GROUP 1 POS H14	A	C0072A	56
SRJ03	SD ROD BNK B GROUP 2 POS J03	A	C0045A	45
SRJ11	SD ROD BNK A GROUP 2 POS J11	A	C0036A	36

INST	DESCRIPT	A	COMPNO	CENO
SRJ13	SD ROD BNK B GROUP 1 POS J13	A	C0040A	40
S[illegible]	SD ROD BNK D GROUP 1 POS K06	A	C0077A	61
S[illegible]	SD ROD BNK D GROUP 1 POS K10	A	C0076A	60
SRL07	SD ROD BNK A GROUP 2 POS L07	A	C0037A	37
SRM04	SD ROD BNK A GROUP 1 POS M04	A	C0033A	33
SRM12	SD ROD BNK A GROUP 1 POS M12	A	C0032A	32
SRN07	SD ROD BNK B GROUP 1 POS N07	A	C0041A	41
SRN09	SD ROD BNK B GROUP 2 POS N09	A	C0044A	44
SRP08	SD ROD BNK C GROUP 1 POS P08	A	C0073A	57
SS11-XD	CONTAINMENT SPRAY ACTUATION SIGN	D	SS11XD	5129
SS21-XD	CONTAINMENT SPRAY ACTUATION SIGN	D	SS21XD	5115
STM A HIDP	STM LINE A HI DP SI CAUS RE	D	P0407D	586
STM HI F	STM LINE HI F SI CAUS RE	D	F0493D	453
STMB HIDP	STM LINE B HI DP SI CAUS RE	D	P0427D	590
STMC HIDP	STM LINE C HI DP SI CAUS RE	D	P0447D	594
STMD HIDP	STM LINE D HI DP SI CAUS RE	D	P0467D	598
SWP31STAT	SERVICE WATER PUMP 31 STATUS	D	SWP31D	956
SWP32STAT	SERVICE WATER PUMP 32 STATUS	D	SWP32D	957
SWP33STAT	SERVICE WATER PUMP 33 STATUS	D	SWP33D	958
SWP34STAT	SERVICE WATER PUMP 34 STATUS	D	SWP34D	959
SWP35STAT	SERVICE WATER PUMP 35 STATUS	D	SWP35D	960
SWP36STAT	SERVICE WATER PUMP 36 STATUS	D	SWP36D	961
T125	RCPD SEAL WTR 1 OUT T	A	T0184A	308
T132	RCPC SEAL WTR 1 OUT T	A	T0183A	307
T146	RCPB SEAL WTR 1 OUT T	A	T0182A	306
T148	RCPA SEAL WTR 1 OUT T	A	T0181A	305
T[illegible]	RCLA OVERTEMP DT1 /RE	D	T0403D	624
T[illegible]	RCLC OVERTEMP DT1 /RE	D	T0443D	628
T495B	RCPA MTR UPPER THRUST BRG T	A	T0414A	315
T495B	RCPB MTR UPPER THRUST BRG T	A	T0434A	327
T495C	RCPC MTR UPPER THRUST BRG T	A	T0454A	339
T495D	RCPD MTR UPPER THRUST BRG T	A	T0474A	351
T495E	RCPA MTR LOWER THRUST BRG T	A	T0416A	317
T495F	RCPB MTR LOWER THRUST BRG T	A	T0436A	329
T495G	RCPC MTR LOWER THRUST BRG T	A	T0456A	341
T495H	RCPD MTR LOWER THRUST BRG T	A	T0476A	353
T496A	RCPA MTR UPPER RADIAL BRG T	A	T0413A	314
T496B	RCPB MTR UPPER RADIAL BRG T	A	T0433A	326
T496C	RCPC MTR UPPER RADIAL BRG T	A	T0453A	338
T496D	RCPD MTR UPPER RADIAL BRG T	A	T0473A	350
T496E	RCPA MTR LOWER RADIAL BRG T	A	T0415A	316
T496F	RCPB MTR LOWER RADIAL BRG T	A	T0435A	328
T496G	RCPC MTR LOWER RADIAL BRG T	A	T0455A	340
T496H	RCPD MTR LOWER RADIAL BRG T	A	T0475A	352
T627A	COMP SUCT HDR A RETURN T	A	T0616A	366
T627B	COMP SUCT HDR B RETURN T	A	T0617A	367
TB CDSR P	TB CDSR PRESSURE	A	P0300A	181
TB OIL LO	TB HYD OIL LO P CAUS RE	D	P0399D	582
TB PWR 1	TB PWR 1 RE TR PART PERM	D	Y0001D	638
TB PWR 2	TB PWR 2 RE TR PART PERM	D	Y0002D	639
TB VIB	HIGH TURBINE VIBRATION TRIP	D	Y9038D	735
TC412D	STM LINE A HI F2 TR P /PERM	D	F0409D	422
T[illegible]D	STM LINE B HI F2 TR P /PERM	D	F0429D	432
TC[illegible]D	STM LINE C HI F2 TR P /PERM	D	F0449D	442

INST	DESCRIPT	A	COMPNO	CENO
TC442D	STM LINE D HI F2 TR P /PERM	D	F0469D	452
TC[illegible]9	DEMIN BYPASS 3-WAY VLV	D	ZH149D	915
TE[illegible]	EXCESS LETDOWN MX DISCHARGE	A	T0122A	300
TE[illegible]	CHARGING TEMPERATURE	A	T0126A	301
TE127	REG HX LETDOWN OUTLET T	A	T0127A	302
TE129	LETDOWN RELIEF VLV DISCHARGE T	A	T0129A	901
TE130	LETDOWN TEMPERATURE	A	T0145A	304
TE140	VCT DISCHARGE TEMP	A	T0140A	303
TE411A/B	RCLA TEMP AVG	A	T0400A	309
TE411A/B	LOOP #1 DT N.R.	A	T0403A	310
TE411A/B	RCLA OVERPWR DT SP	A	T0407A	312
TE411A/B	RCLA OVERTEMP DT SP	A	T0410A	313
TE411A/B	RCL AUCT DT	A	T0497A	364
TE411A/B	RCL AUCT TEMP AVG	A	T0499A	365
TE413A	LOOP #1 HOT LEG TEMPERATURE	A	T0419A	5037
TE413B	LOOP #1 COLD LEG TEMPERATURE	A	T0406A	5038
TE418	SG #31 FEED WTR TEMP	A	T0418A	319
TE421A/B	RCLB TEMP AVG	A	T0420A	321
TE421A/B	LOOP #2 DT N.R.	A	T0423A	322
TE421A/B	RCLB OVERPWR DT SP	A	T0427A	324
TE421A/B	RCLB OVERTEMP DT SP	A	T0430A	325
TE423A	LOOP #2 HOT LEG TEMPERATURE	A	T0439A	5039
TE423B	LOOP #2 COLD LEG TEMPERATURE	A	T0426A	5040
TE428	SG #32 FEED WTR TEMP	A	T0438A	331
TE431A/B	RCLC TEMP AVG	A	T0440A	333
TE431A/B	RCLC LOOP #3 DT N.R.	A	T0443A	334
T[illegible]A/B	RCLC OVERPWR DT SP	A	T0447A	336
T[illegible]A/B	RCLC OVERTEMP DT SP	A	T0450A	337
TE433A	LOOP #3 HOT LEG TEMPERATURE	A	T0459A	5041
TE433B	LOOP #3 COLD LEG TEMPERATURE	A	T0446A	5042
TE438	SG #33 FEED WTR TEMP	A	T0458A	343
TE441A/B	RCLD TEMP AVG	A	T0460A	345
TE441A/B	RCLD LOOP #4 DT N.R.	A	T0463A	346
TE441A/B	RCLD OVERPWR DT SP	A	T0467A	348
TE441A/B	RCLD OVERTEMP DT SP	A	T0470A	349
TE443A	LOOP #4 HOT LEG TEMPERATURE	A	T0479A	5043
TE443B	LOOP #4 COLD LEG TEMPERATURE	A	T0466A	5044
TE448	SG #34 FEED WTR TEMP	A	T0478A	355
TE450	PRESSURIZER SURGE LINE TEMP	A	T0482A	359
TE451	PRESSURIZER SPRAY WTR A IN T	A	T0483A	360
TE452	PRESSURIZER SPRAY WTR B IN T	A	T0484A	361
TE453	PRESSURIZED LIQUID TEMP	A	T0480A	357
TE454	PRESSURIZER VAPOR TEMP	A	T0481A	358
TE456	PZR SAFETY VLV TEMP	A	T4650A	1042
TE463	POWER OP RELIEF VLV T	A	T4630A	1041
TE467	PZT SAFETY VLV TEMP	A	T4670A	1043
TE469	PZR SAFETY VALVE TEMP	A	T4690A	1047
TE471	PRESSURIZER RELIEF TANK TEMP	A	T0485A	362
TE602A	COMPONENT CLNG HX OUT LOOP A T	A	T0620A	368
TE602B	COMPONENT CLNG HX OUT LOOP B T	A	T0621A	369
TE636	RESIDUAL HEAT PMP DISCH T	A	T0630A	372
TE639	LOW HEAD SI HEADER (RHR) T	A	T0627A	370
T[illegible]	LOW HEAD SI HEADER (RHR) T	A	T0628A	371
T[illegible]T BRG	THRUST BEARING WEAR TRIP	D	Y9060D	739

INST	DESCRIPT	A	COMPNO	CENO
TRBKR A	REAC MAIN TR BRKR A	D	Y0006D	643
TRBKR B	REAC MAIN TR BRKR B	D	Y0007D	644
T[illegible]3	CONTAINMENT TEMPERATURE	A	T1203A	5046
TURB POS	TURBINE ROTOR POSITION	A	TROTPA	142
TURB RPM	TURBINE RPM	A	TRPMA	143
TURB VIB A	TURBINE VIBRATION A	A	TVIBAA	144
TURB VIB B	TURBINE VIBRATION B	A	TVIBBA	145
TURB VIB C	TURBINE VIBRATION C	A	TVIBCA	146
TURB VIB D	TURBINE VIBRATION D	A	TVIBDA	147
TURB VIB E	TURBINE VIBRATION E	A	TVIBEA	148
TURB VIB F	TURBINE VIBRATION F	A	TVIBFA	149
TURB VIB G	TURBINE VIBRATION G	A	TVIBGA	150
TURB VIB H	TURBINE VIBRATION H	A	TVIBHA	151
TURB VIB I	TURBINE VIBRATION I	A	TVIBIA	152
TURB VIB J	TURBINE VIBRATION J	A	TVIBJA	153
TURB VIB K	TURBINE VIBRATION K	A	TVIBKA	154
TURB VIB L	TURBINE VIBRATION L	A	TVIBLA	155
TURB VIB M	TURBINE VIBRATION M	A	TVIBMA	156
TURB VIB N	TURBINE VIBRATION N	A	TVIBNA	157
TURB VIB O	TURBINE VIBRATION O	A	TVIBOA	158
V1-1X	CNMT ISO ACTUAT SIGNAL	D	SV1D	5047
V2-1X	CNMT ISO ACTUAT SIGNAL	D	SV2D	5048
VC HI P	CONTAINMENT HI P SI CAUSE RE	D	P1003D	619
VENT FLOW	STACK DISCHARGE AIR FLOW	A	Y9051A	381

FIGURES

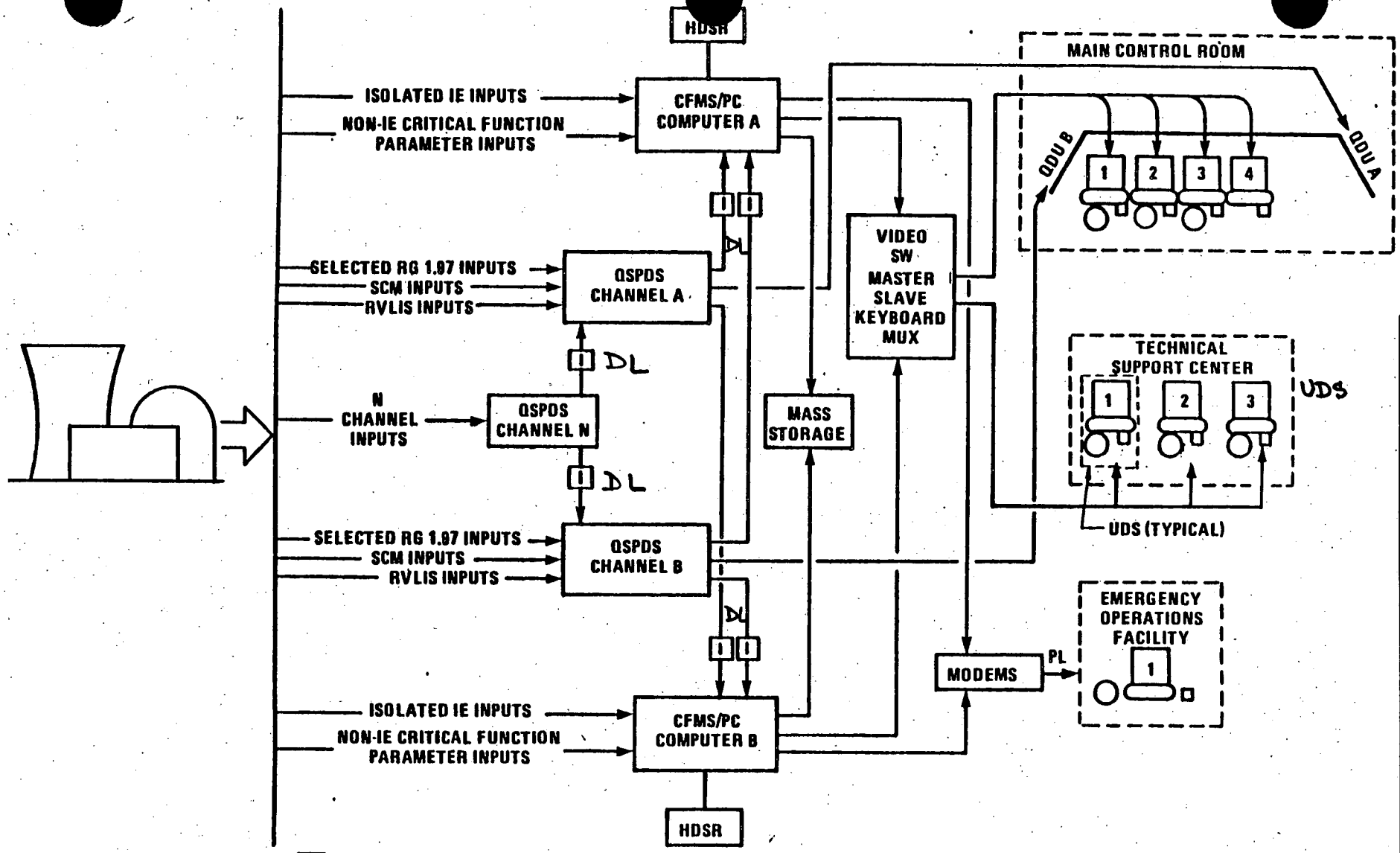

N	- SAFETY PARAMETER DISPLAY
CFM	- CRITICAL FUNCTION MONITORING
HDSR	- HISTORIC DATA STORAGE & RETRIEVAL
DL	- DATA LINK
UDS	- USER DISPLAY STATION
	- KEYBOARD
PL	- PHONE LINE
SCM	- SUBCOOLED MARGIN
RVLIS	- REACTOR VESSEL LEVEL INSTRUMENTATION SYSTEM
PC	- PLANT COMPUTER
I	- ISOLATOR
QDU	- QUALIFIED DISPLAY UNIT
	- PAGE CONTROL MODULE
O	- CHARACTER PRINTER

FIGURE 1

INDIAN POINT 3 CFMS BLOCK DIAGRAM

FIGURE

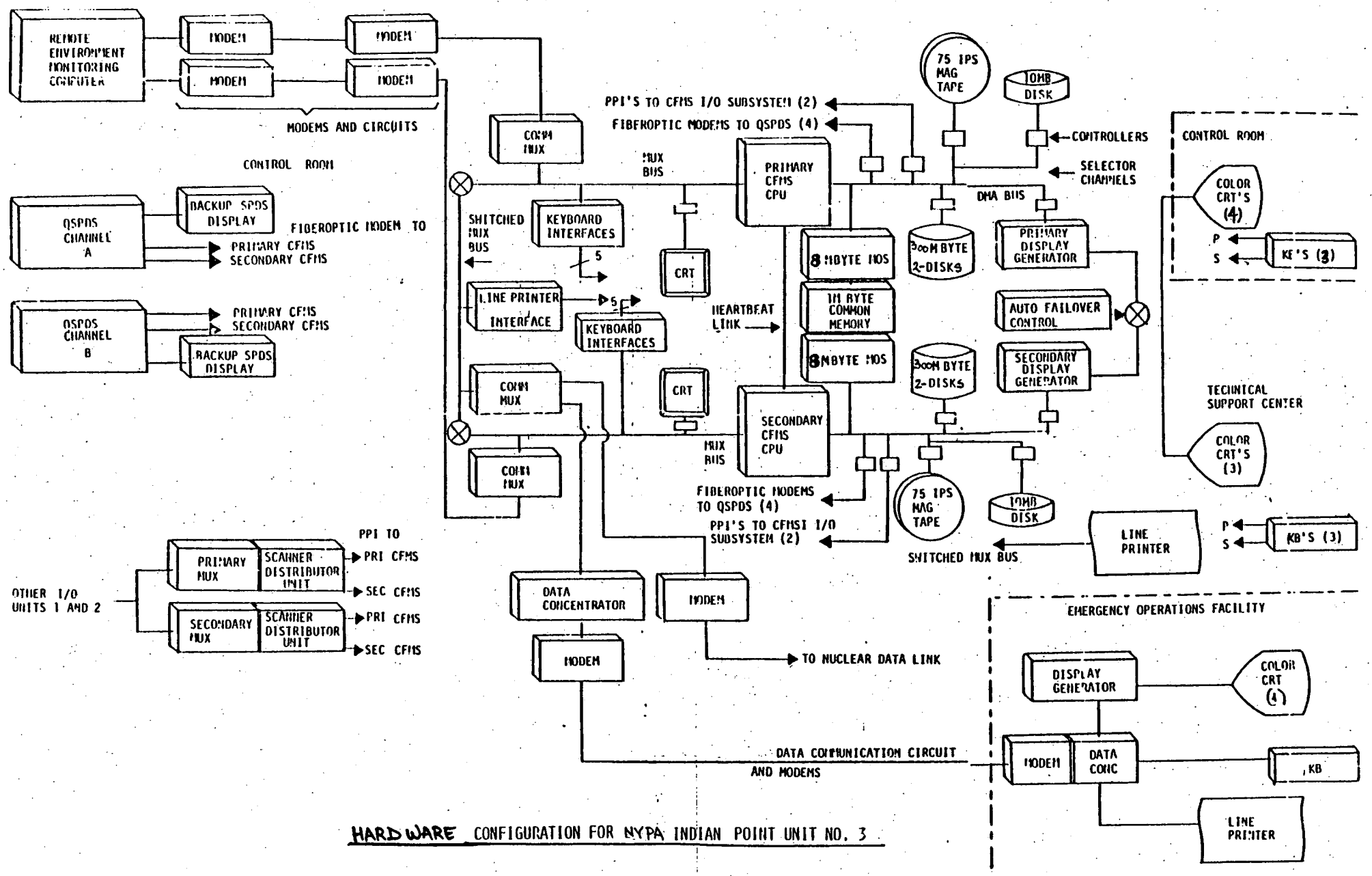

HARDWARE CONFIGURATION FOR NYPA INDIAN POINT UNIT NO. 3

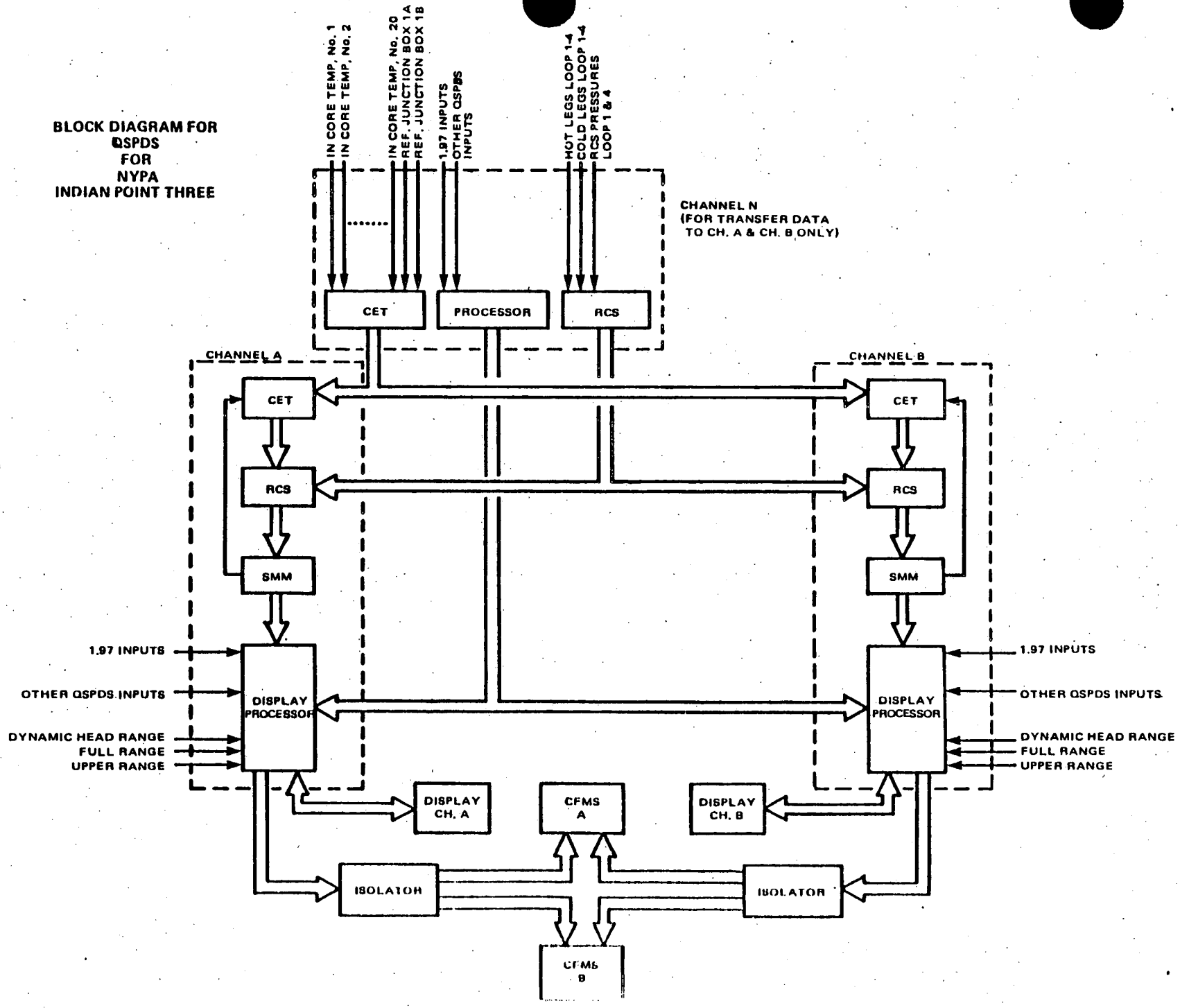

FIGURE 3

INDIAN POINT 3 QSPDS FUNCTION BLOCKS

FIGURE 4

SPDS Layout in Central Control Room

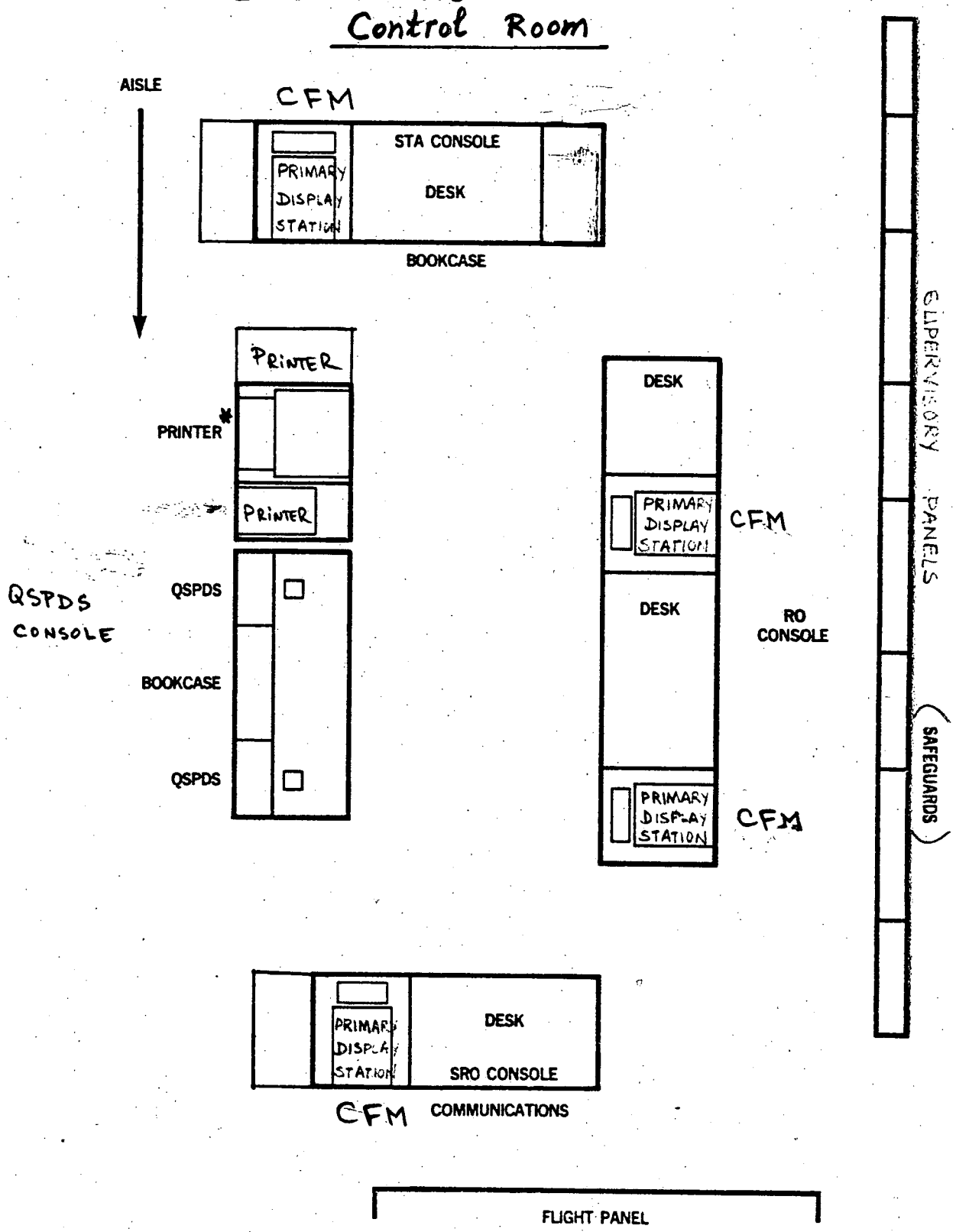

* There will be another matrix printer located in the Control Room (Total of 3).

FIGURES 5a-5f

CRITICAL SAFETY FUNCTIONS

(WOG-LP, Rev. 1; ERGs / CSFSTs)

FIGURE 5a

Number:	Title:	Rev. Issue/Date:
F-0.1	SUBCRITICALITY	HP/LP, REV. 1 1 Sept., 1983

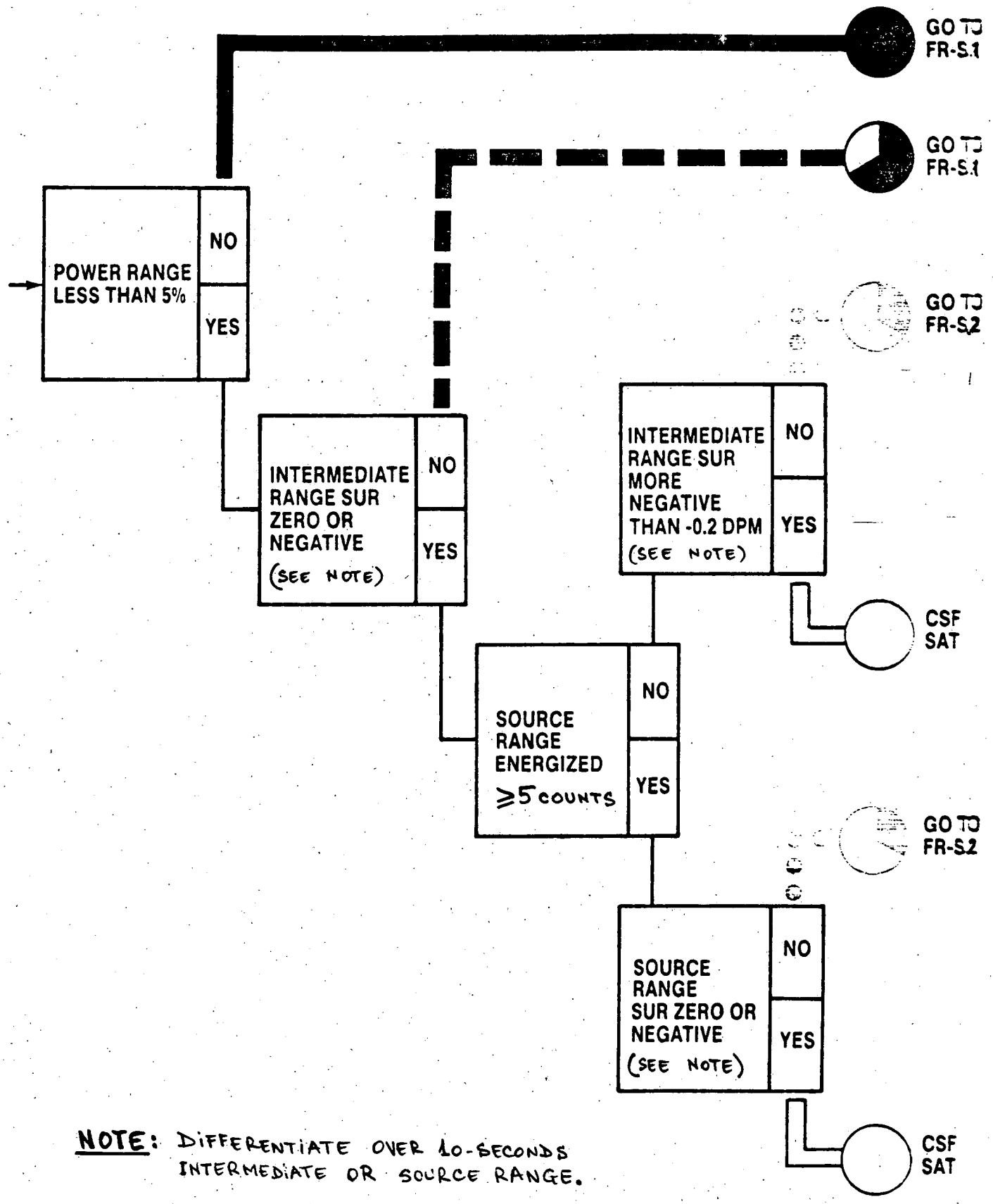

NOTE: DIFFERENTIATE OVER 10-SECONDS INTERMEDIATE OR SOURCE RANGE.

Number:	Title:	Rev. Issue/Date:
F-0.2	CORE COOLING	HP/LP, REV. 1 1 Sept., 1983

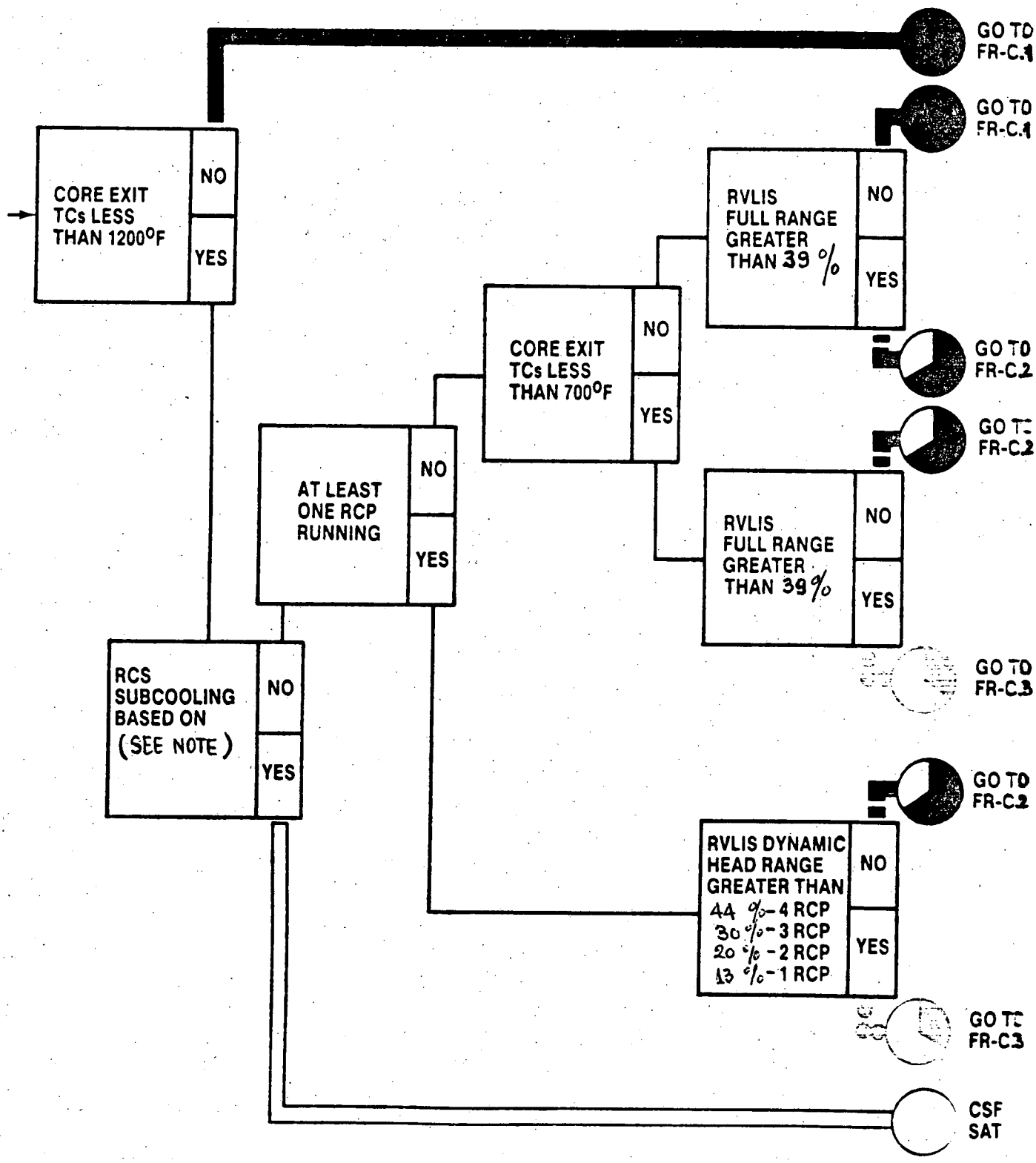

NOTE: HIGHEST T_{HOT} LESS THAN T_{SAT} FOR LOWEST RCS PRESSURE MINUS PRESSURE RELATED ERROR CONVERTED INTO TEMPERATURE.

Number:	Title:	Rev. Issue/Date:
F-0.3	HEAT SINK	HP/LP, REV. 1 1 Sept., 1983

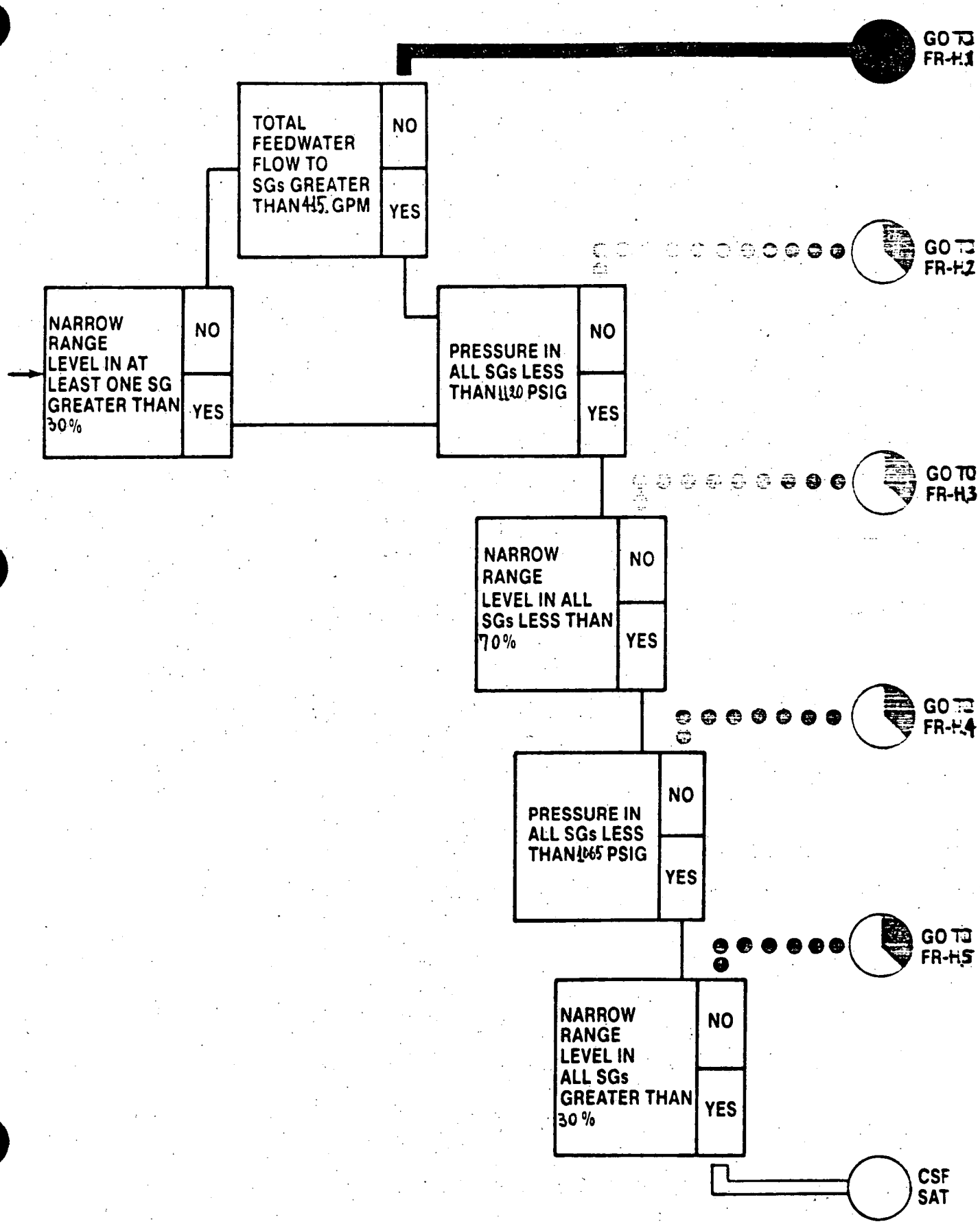

FIGURE 5a

Number:	Title:	Rev. Issue/Date:
F-0.4	INTEGRITY	HP/LP, REV. 1 1 Sept., 1983

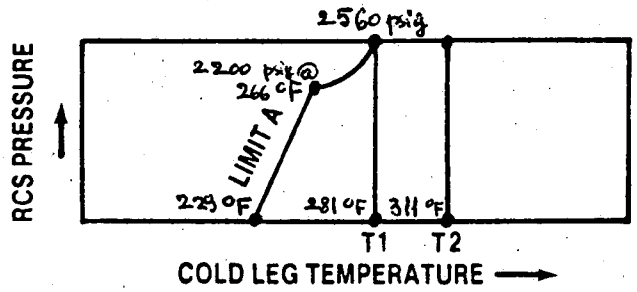

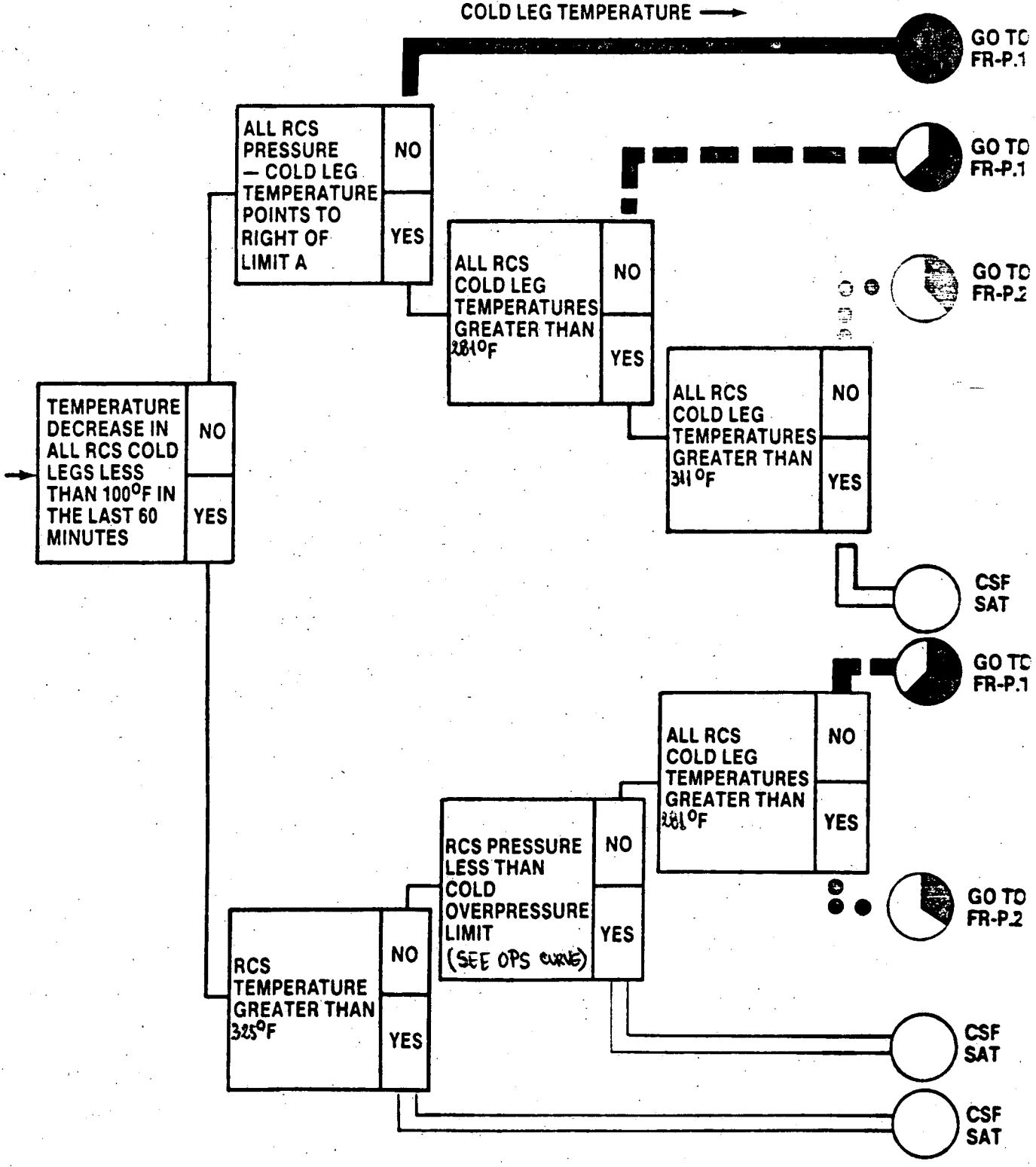

(ATTACHED TO FIG[illegible])

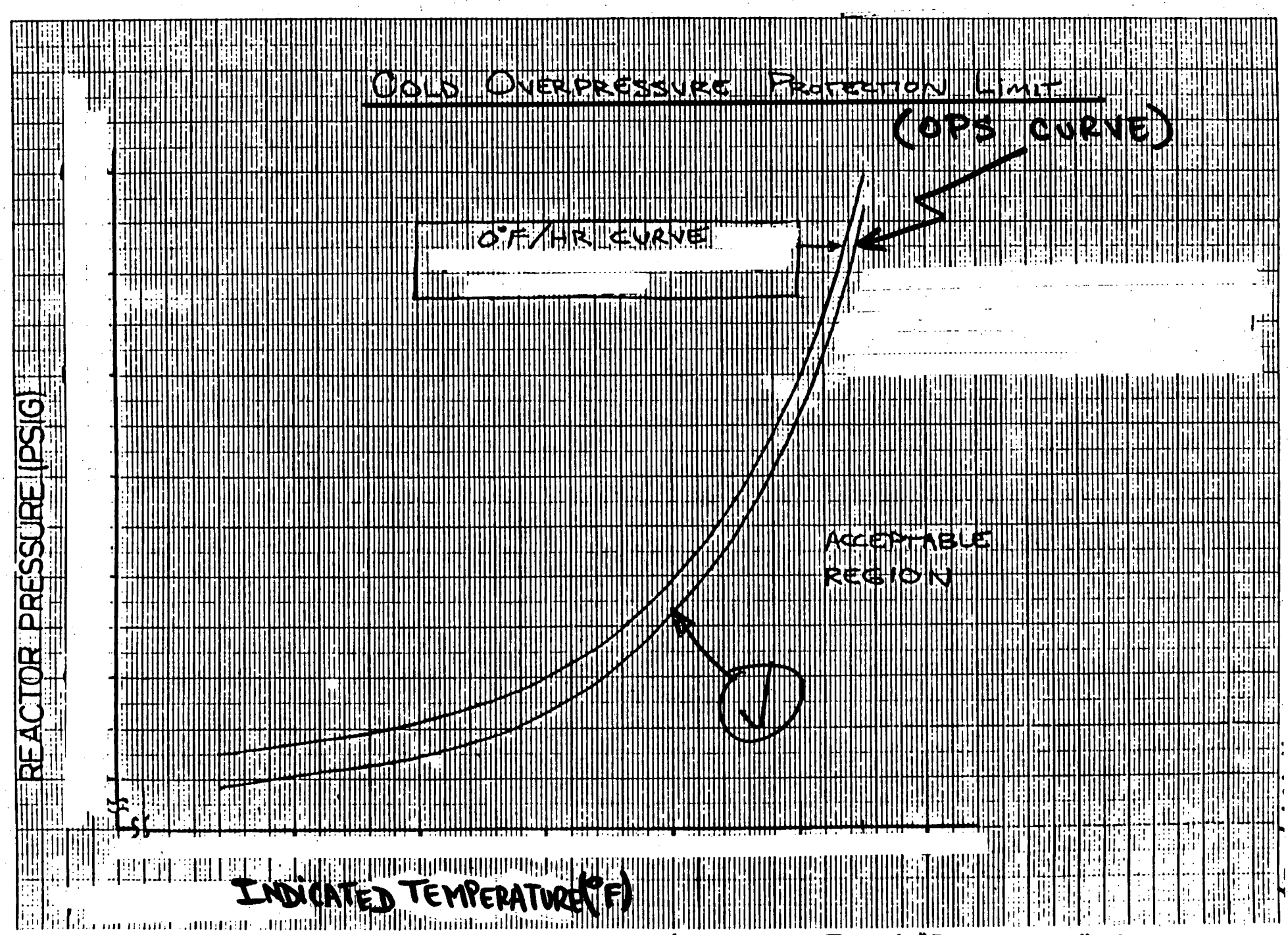

NOTE: USE INF F-0.4 "INTEGRITY" STATUS TREE

FIGURE 52

Number:	Title:	Rev. Issue/Date:
F-0.5	CONTAINMENT	HP/LP, REV. 1 1 Sept., 1983

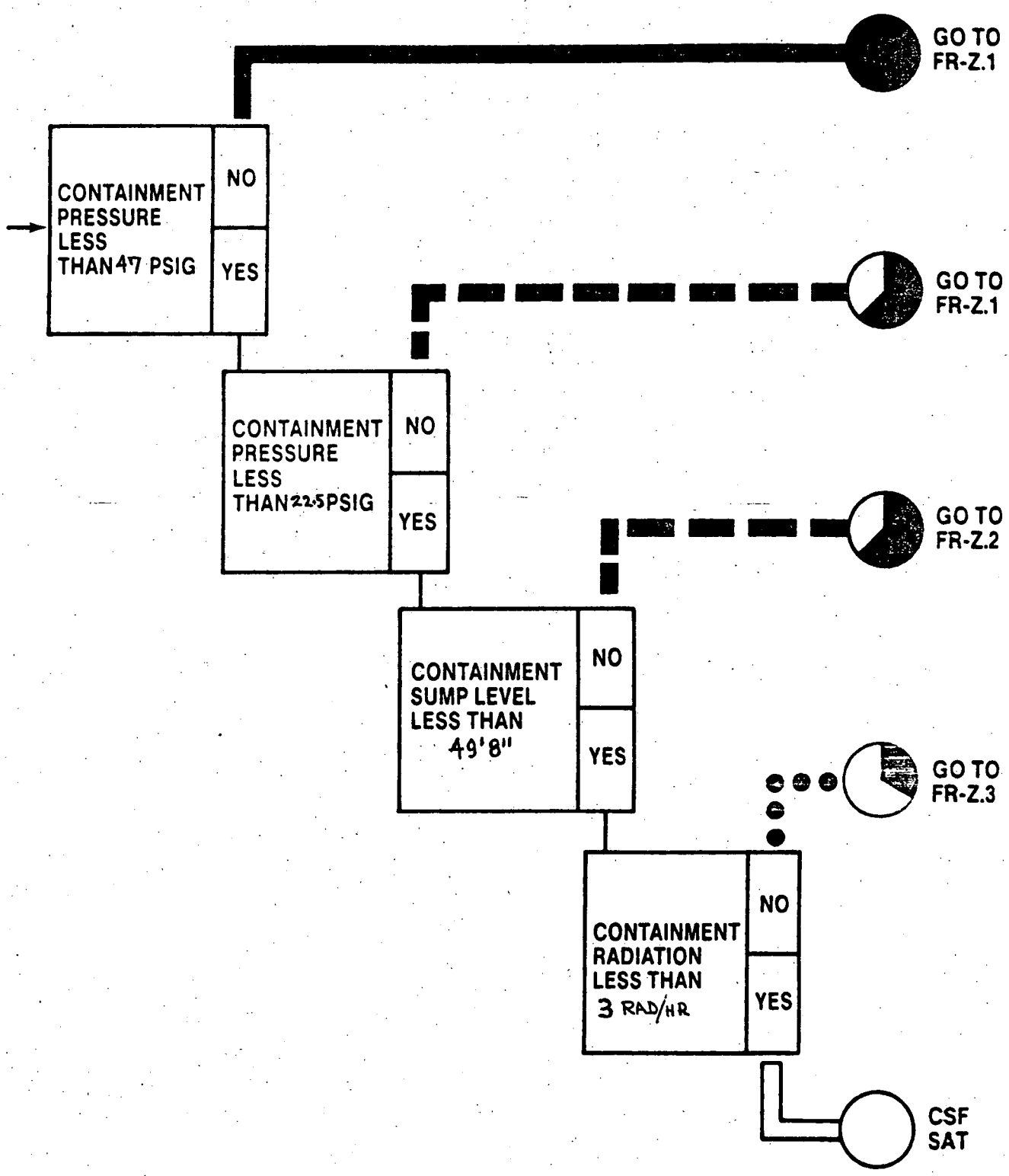

FIGURE 57

Number:	Title:	Rev. Issue/Date:
F-0.6	INVENTORY	HP/LP, REV. 1 1 Sept., 1983

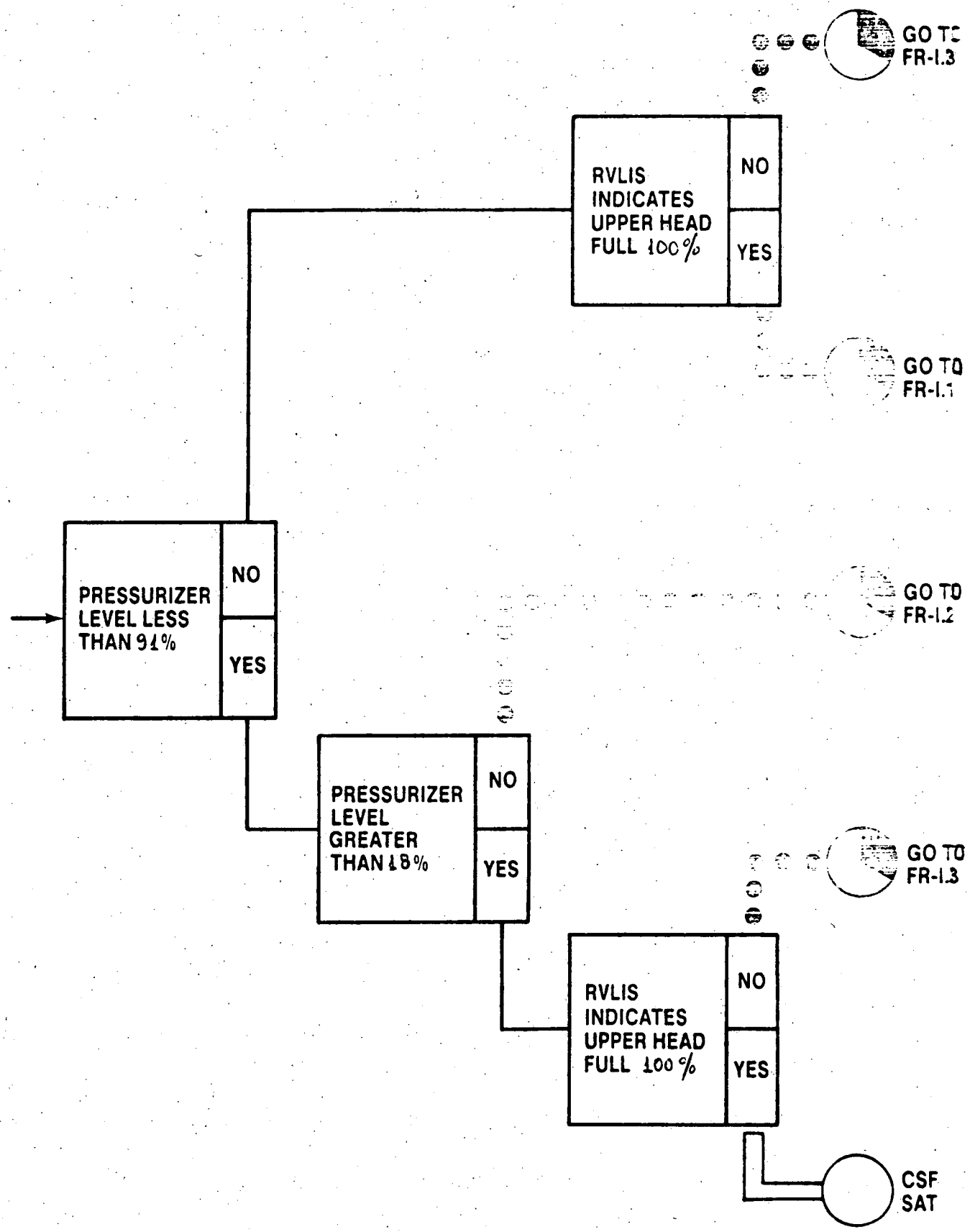

FIGURE 6 - DATA SET PROCESSING BLOCK DIAGRAM (CFMS)

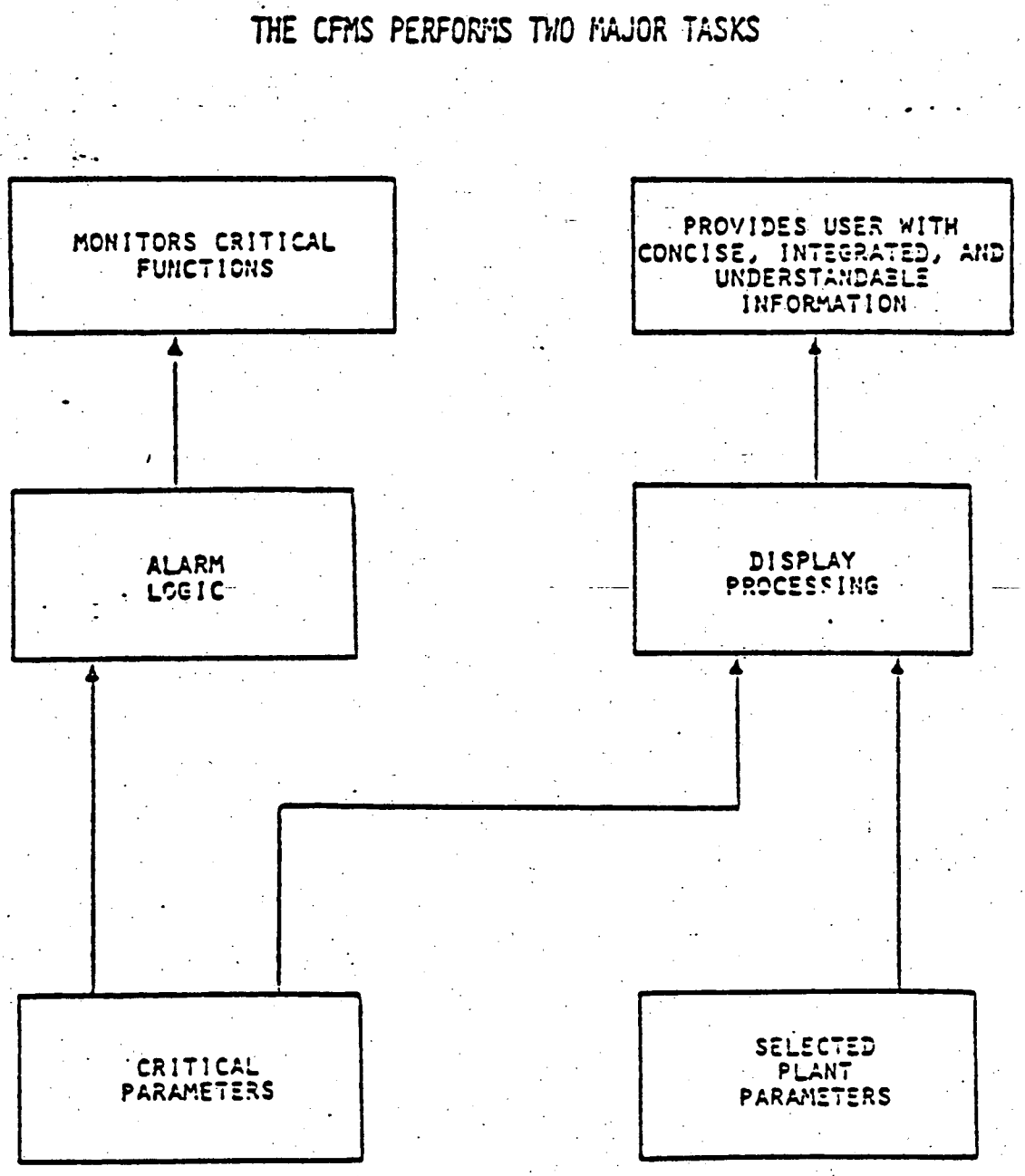

FIGURE 7 QSPDS HIERARCHY

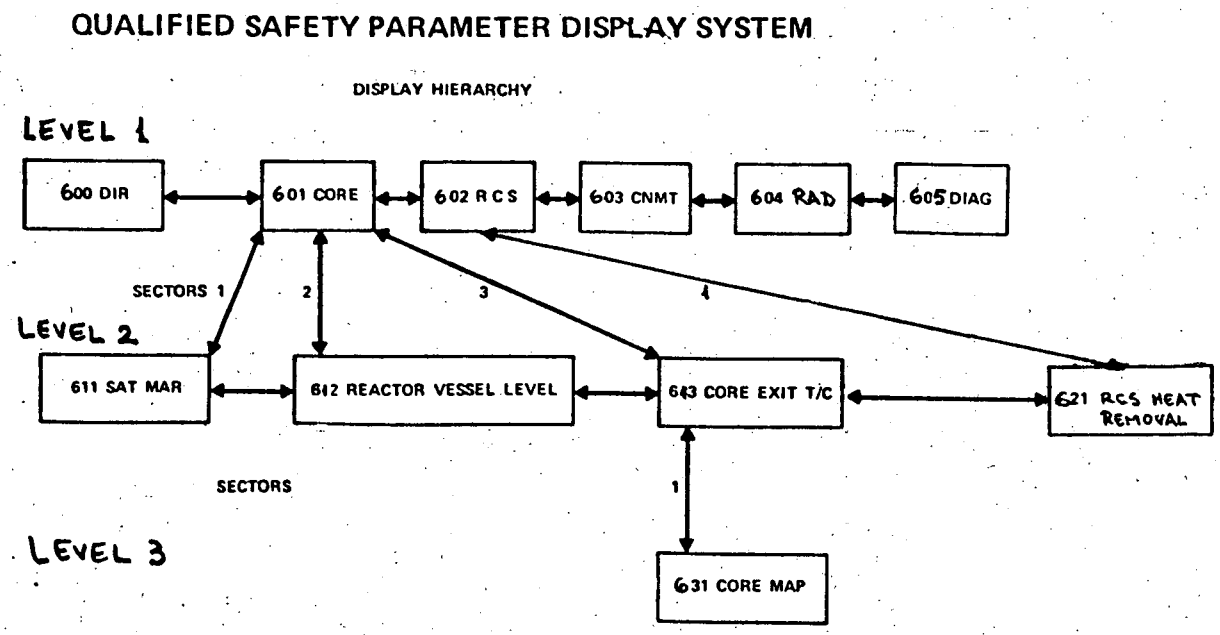

QSPDS - CHANNEL A - DISPLAY PAGES

XXXXXXXX
XXXXXXXX
XXXXXXXX means "Various Operator Errors"
XXXXXXXX

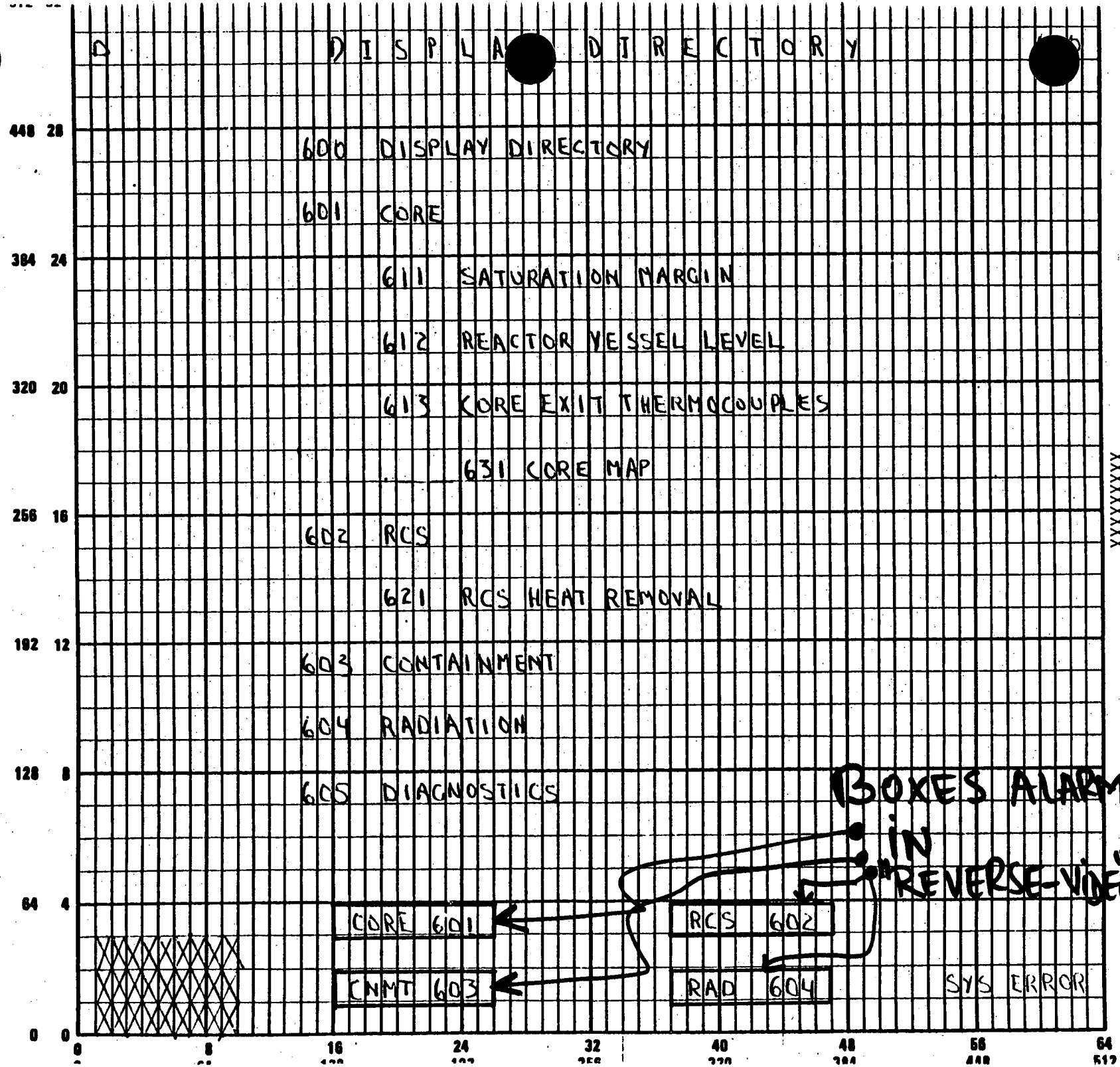

FIGURE 8 (22 pages)

Channels A and B.

QSPDS CHANNEL A - DISPLAY PAGES

XXXXXXXX means SUBCOOLED or SUPERHEAT

CORE

REACTIVITY CONTROL

SOURCE RANGE N31	0.000+00	CPS
SOURCE RANGE N32	0.000+00	CPS
INTERMEDIATE RANGE N35	0.000-00	AMPS
INTERMEDIATE RANGE N36	0.000-00	AMPS
POWER RANGE N41	000.0	% POWER
POWER RANGE N42	000.0	% POWER
POWER RANGE N43	000.0	% POWER
POWER RANGE N44	000.0	% POWER

CORE HEAT REMOVAL CONTROL

LOWEST RCS SAT MARGIN 1	000	DEG F XXXXXXXXX
FULL RANGE VESSEL LEVEL 2	000.0	% ABOVE BOTTOM
CET SATURATION MARGIN 1	0000	DEG F XXXXXXXXX
REPRESENTATIVE CET TEMP 3	0000	DEG F

CORE 601 | RCS 602

CNMT 603 | RAD 604 | SYS ERROR

XXXXXXXXX
XXXXXXXXX
XXXXXXXXX

448 28
384 24
320 20
256 16
192 12
128 8
64 4
0 0

0 8 16 24 32 40 48 56 64

SATURATION MARGIN

LOOP 33 SATURATION MARGIN

REACTOR COOLANT

TSAT 000 DEG F XXXXXXXXX
PSAT 0000 PSI XXXXXXXXX

CORE EXIT TEMP

TSAT 0000 DEG F XXXXXXXXX
PSAT 0000 PSI XXXXXXXXX

LOOP 34 SATURATION MARGIN

REACTOR COOLANT

TSAT 000 DEG F XXXXXXXXX
PSAT 0000 PSI XXXXXXXXX

CORE EXIT TEMP

TSAT 0000 DEG F XXXXXXXXX
PSAT 0000 PSI XXXXXXXXX

CORE SATURATION MARGIN

TSAT 0000 DEG F XXXXXXXXX
PSAT 0000 PSI XXXXXXXXX

LOOP 31 SATURATION MARGIN

REACTOR COOLANT

TSAT 000 DEG F XXXXXXXXX
PSAT 0000 PSI XXXXXXXXX

CORE EXIT TEMP

TSAT 0000 DEG F XXXXXXXXX
PSAT 0000 PSI XXXXXXXXX

LOOP 32 SATURATION MARGIN

REACTOR COOLANT

TSAT 000 DEG F XXXXXXXX
PSAT 0000 PSI XXXXXXXX

CORE EXIT TEMP

TSAT 0000 DEG F XXXXXXXX
PSAT 0000 PSI XXXXXXXX

CORE 601

RCS 602

CNMT 603

RAD 604

SYS ERROR

XXXXXXXX

XXXXXXXX means SUBCOOLED or SUPERHEAT

CHANNEL A

448 28
384 24
320 20
256 16
192 12
128 8
64 4
0 0

0 8 16 24 32 40 48 56 64

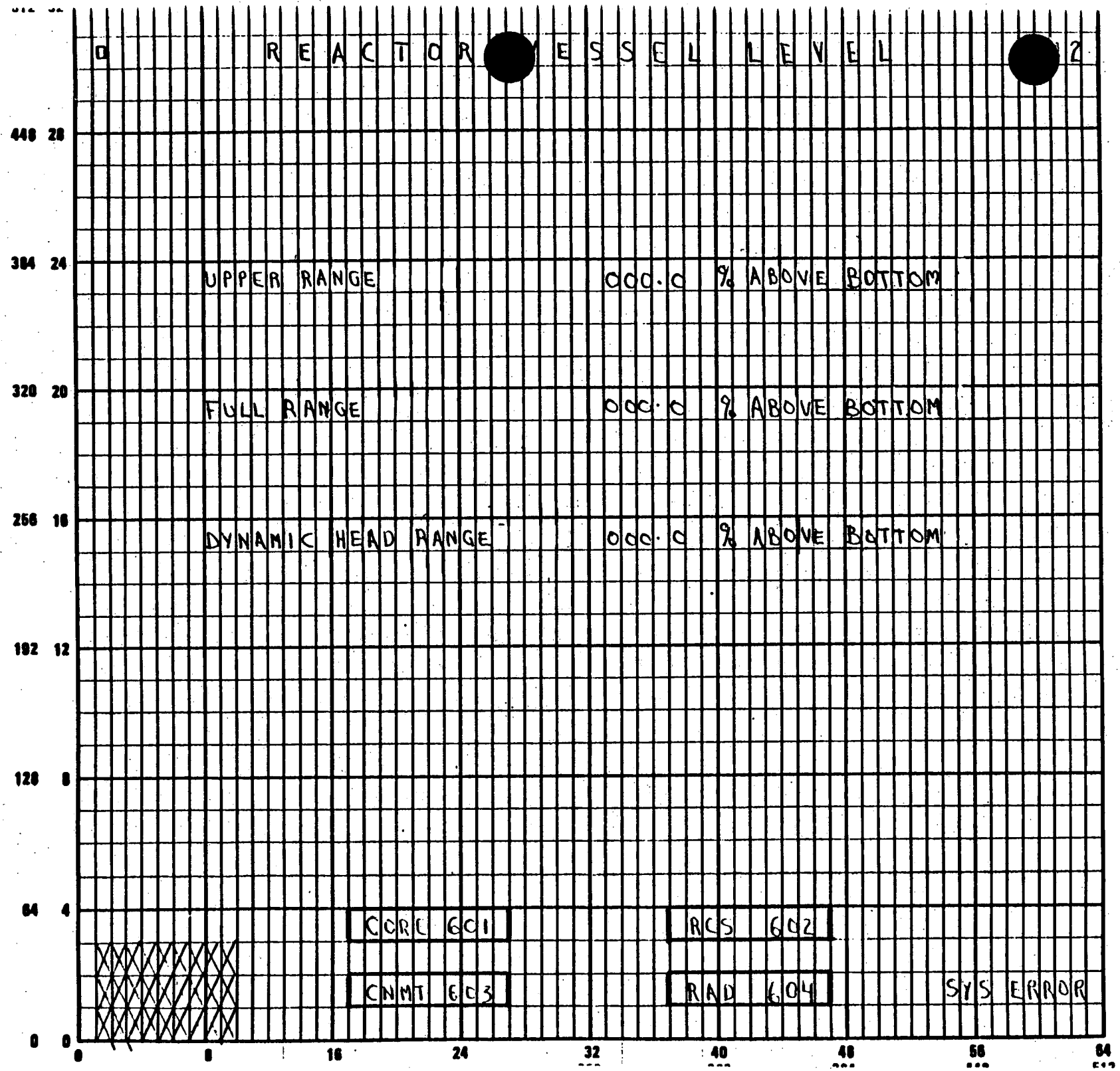
REACTOR VESSEL LEVEL
UPPER RANGE 000.0 % ABOVE BOTTOM
FULL RANGE 000.0 % ABOVE BOTTOM
DYNAMIC HEAD RANGE 000.0 % ABOVE BOTTOM
CORE 601
RCS 602
CNMT 603
RAD 604
SYS ERROR
448 28
384 24
320 20
256 16
192 12
128 8
64 4
0 0
0 8 16 24 32 40 48 56 64

CHANNEL A.

CORE EXIT THERMOCOUPLES

CORE EXIT T/C TEMP 1

REPRESENTATINE CET TEMP 0000 DEG F

CET SATURATION MARGIN 0000 DEG F XXXXXXXXX

QUADRANT	ID	HIGHEST TEMP	ID	NEXT HI TEMP
1	X	0000 DEG F	X	0000 DEG F
2	X	0000 DEG F	X	0000 DEG F
3	X	0000 DEG F	X	0000 DEG F
4	X	0000 DEG F	X	0000 DEG F

CORE 601 RCS 602

CNMT 603 RAD 604 SYS ERROR

XXXXXXXXX
XXXXXXXXX
XXXXXXXXX

ID numbers assigned vai core map page
XXXXXXXXX means SUBCOOLED or SUPERHEAT

CORE MAP

631

CHANNEL A

QUADRANT 3		
	CET	TEMP
1	E14	0000
2	B13	0000
3	F12	0000
4	E11	0000
5	B10	0000
	AVG	0000

QUADRANT 4		
	CET	TEMP
1	L14	0000
2	P13	0000
3	L12	0000
4	L11	0000
5	J10	0000
	AVG	0000

PWR RANGE N42 000.0 %

PWR RANGE N44 000.0 %

LOOP 33

LOOP 34

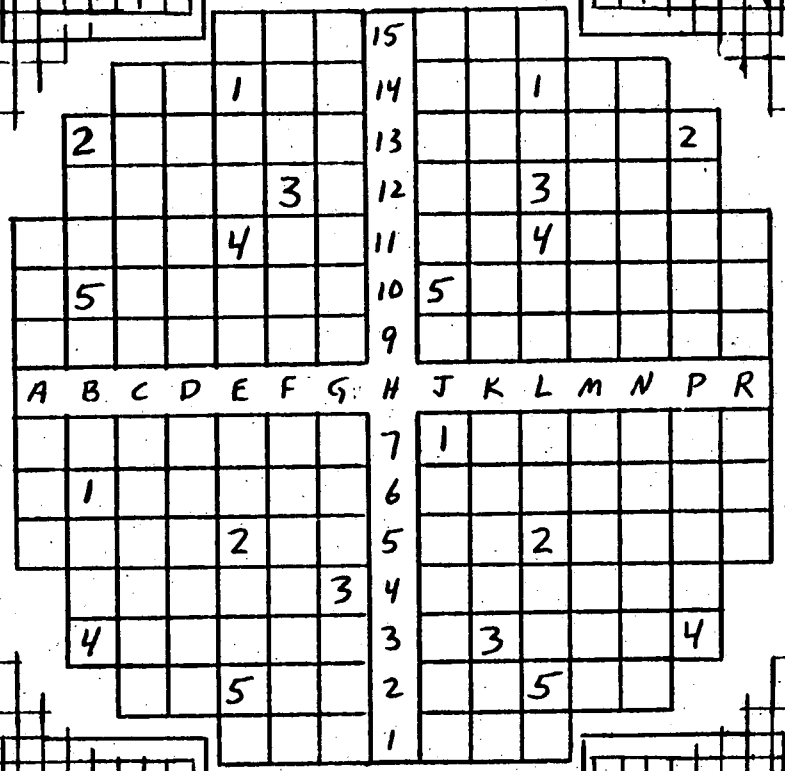

QUADRANT 1		
	CET	TEMP
1	B06	0000
2	E05	0000
3	G04	0000
4	B03	0000
5	E02	0000
	AVG	0000

QUADRANT 2		
	CET	TEMP
1	J07	0000
2	L05	0000
3	K03	0000
4	P03	0000
5	L02	0000
	AVG	0000

LOOP 31

LOOP 32

PWR RANGE N43 000.0 %

PWR RANGE N41 000.0 %

CORE 601

RCS 602

CNMT 603

RAD 604

SYS ERROR

448 28 384 24 320 20 256 16 192 12 128 8 64 4 0 0

0 8 16 24 32 40 48 56 64

448 28

384 24

320 20

256 16

192 12

128 8

64 4

0 0

RCS HEAT REMOVAL 1

STEAM GEN NUMBER	LEVEL	OUTLET PRESSURE	AFW FLOW TO SG
31	000.0 %	0000 PSIG	SEE CH B
32	000.0 %	0000 PSIG	000.0 GPM
33	000.0 %	0000 PSIG	000.0 GPM
34	000.0 %	0000 PSIG	000.0 GPM

CST LEVEL 00.0 FEET

RCS PRESSURE CONTROL

RCS PRESSURE LOOP 31	0000	PSIG
RCS PRESSURE LOOP 34	0000	PSIG
LOWEST RCS SAT MARGIN	000D	DEG F XXXXXXXXX

RCS INVENTORY CONTROL

REACTOR VESSEL LEVEL FULL RANGE	000.0	% ABOVE BOTTOM
REACTOR VESSEL LEVEL UPPER RANGE	000.0	% ABOVE BOTTOM
PRESSURIZER LEVEL	000.0	%

CORE 601 | RCS 602

CNMT 603 | RAD 604 | SYS ERROR

XXXXXXXX means SUBCOOLED or SUPERHEAT

RCS HEAT REMOVAL

LOOP	HOT LEG TEMP	COLD LEG TEMP	SG NO.	SG LEVEL
31	000.0 DEG F	000.0 DEG F	31	000.0 %
32	000.0 DEG F	000.0 DEG F	32	000.0 %
33	000.0 DEG F	000.0 DEG F	33	000.0 %
34	000.0 DEG F	000.0 DEG F	34	000.0 %

UPPER RANGE REACTOR VESSEL LEVEL 000.0 % ABOVE BOTTOM

AFW FLOW TO SG 31	SEE CH B
AFW FLOW TO SG 32	000.0 GPM
AFW FLOW TO SG 33	000.0 GPM
AFW FLOW TO SG 34	000.0 GPM
RWST LEVEL	SEE CH B

SAFETY INJECTION FLOWS

FT926A HIGH HEAD SI BIT FLOW TO COLD LEG 33	SEE CH B
FT926 HIGH HEAD SI FLOW TO COLD LEG 31	SEE CH B
FT946C LOW HEAD SI FLOW TO COLD LEG 32	SEE CH B
FT946A LOW HEAD SI FLOW TO COLD LEG 34	SEE CH B

CORE 601 RCS 602

CNMT 603 RAD 604 SYS ERROR

CHANNEL A

CONTAINMENT

CONTAINMENT INTEGRITY

VC PRESSURE	000.0	PSIG
VC TEMPERATURE	SEE CH B	
VC LEVEL	00.00	FEET
VC SUMP LEVEL	00.00	FEET
RECIRC SUMP LEVEL	00.00	FEET
HYDROGEN CONCENTRATION	00.00	%
R-25 VC HI RANGE	0.000+00	R/HR
R-26 VC HI RANGE	0.000+00	R/HR

ENGINEERING SAFEGUARDS

CCW EXCESS LETDOWN HX	XXX	XXXXXX
CCW HEAT EXCHANGER TO RCPS		SEE CH B
VC VENT ISOLATION SIGNAL	XXX	XXXXXXXX
VC ISOLATION PHASE A SIGNAL	XXX	XXXXXXXX
VC ISOLATION PHASE B SIGNAL	XXX	XXXXXXXX
SI ACTUATION SIGNAL	XXX	XXXXXXXX
STEAM LINE ISOLATION ACTUATION SIGNAL	XXX	XXXXXXXX
VC SPRAY ACTUATION SIGNAL	XXX	XXXXXXXX
VC SPRAY PUMP 31 STATUS		XXX
VC SPRAY PUMP 32 STATUS		SEE CH B
INSWS FCV 1410	XXX	XXXXXX
FW ISOLATION SIGNAL		XXXXXXXX

CORE 601 | RCS 602

CNMT 603 | RAD 604 | SYS ERROR

CHANNEL A

XXX XXXXXXX means ACTUATED or NOT ACTUATED
XXXXXXXX means ISOLATED or NORMAL
XXX maens ON or OFF
XXX XXXXXX means CLOSED or NOT CLOSED

448 28
384 24
320 20
256 16
192 12
128 8
64 4
0 0

0 8 16 24 32 40 48 56 64
0 64 128 192 256 320 384 448 512

R A D I A T I O N

RADIATION MONITORING

R-1 CCR	0.000E00	MR/HR
R-5 FSB	0.000E00	MR/HR
R-10 STEAM LINE PENETRATIONS	0.000E00	R/HR
R-11 VC PARTICULATE	0.000E00	CPM
R-12 VC RADIOGAS	0.000E00	CPM
R-13 PLANT VENT PARTICULATE	0.000E00	CPM
R-15 SJAE	0.000E00	CPM
R-19 SG BLOWDOWN ACTIVITY	0.000E00	CPM
R-25 VC HI RANGE	0.000E00	R/HR
R-26 VC HI RANGE	0.000E00	R/HR
R-27 WRGM	0.000E00	μCi/SEC

CORE 601 | RCS 602

CNMT 603 | RAD 604 | SYS ERROR

CHANNEL A

448 28 384 24 320 20 256 16 192 12 128 8 64 4 0 0

0 8 16 24 32 40 48 56 64

0 64 128 192 256 320 384 448 512

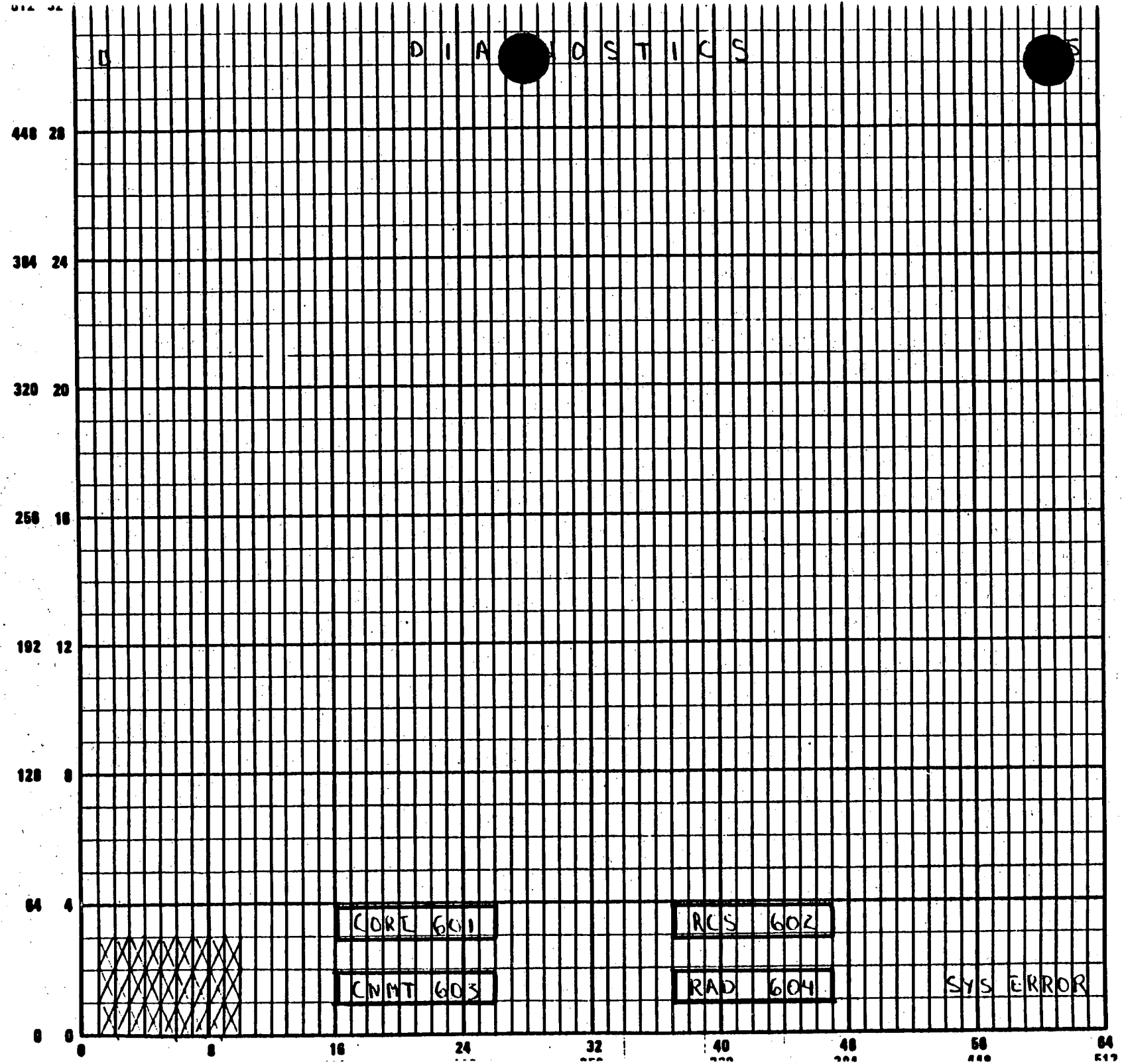
DIAGNOSTICS
448 28
384 24
320 20
256 16
192 12
128 8
64 4
0 0
0 8 16 24 32 40 48 56 64
CORE 601
RCS 602
CNMT 603
RAD 604
SYS ERROR

CHANNEL A

D DISPLAY DIRECTORY D

600 DISPLAY DIRECTORY

601 CORE

611 SATURATION MARGIN

612 REACTOR VESSEL LEVEL

613 CORE EXIT THERMOCOUPLES

631 CORE MAP

602 RCS

621 RCS HEAT REMOVAL

603 CONTAINMENT

604 RADIATION

605 DIAGNOSTICS

CORE 601 | RCS 602

CNMT 603 | RAD 604 | SYS ERROR

XXXXXXXX
XXXXXXXX
XXXXXXXX
XXXXXXXX

CHANNEL B

means "Various Operator Errors"

448 28
384 24
320 20
256 16
192 12
128 8
64 4
0 0

0 8 16 24 32 40 48 56 64

CHANNEL B

XXXXXXXX means SUBCOOLED or SUPERHEAT

CORE

REACTIVITY CONTROL

SOURCE RANGE N31	0.000+00	CPS
SOURCE RANGE N32	0.000+00	CPS
INTERMEDIATE RANGE N35	0.000-00	AMPS
INTERMEDIATE RANGE N36	0.000-00	AMPS
POWER RANGE N41	000.0	% POWER
POWER RANGE N42	000.0	% POWER
POWER RANGE N43	000.0	% POWER
POWER RANGE N44	000.0	% POWER

CORE HEAT REMOVAL CONTROL

LOWEST RCS SAT MARGIN 1	000	DEG F XXXXXXXXX
FULL RANGE VESSEL LEVEL 2	000.0	% ABOVE BOTTOM
CET SATURATION MARGIN 1	0000	DEG F XXXXXXXXX
REPRESENTATIVE CET TEMP 3	0000	DEG F

CORE 601 RCS 602

CNMT 603 RAD 604 SYS ERROR

XXXXXXXXX
XXXXXXXXX
XXXXXXXXX

448 28
384 24
320 20
256 16
192 12
128 8
64 4
0 0

0 8 16 24 32 40 48 56 64

SATURATION MARGIN

6

LOOP 33 SATURATION MARGIN

REACTOR COOLANT

TSAT 000 DEG F XXXXXXXXX
PSAT 0000 PSI XXXXXXXXX

CORE EXIT TEMP

TSAT 0000 DEG F XXXXXXXXX
PSAT 0000 PSI XXXXXXXXX

LOOP 34 SATURATION MARGIN

REACTOR COOLANT

TSAT 000 DEG F XXXXXXXXX
PSAT 0000 PSI XXXXXXXXX

CORE EXIT TEMP

TSAT 0000 DEG F XXXXXXXXX
PSAT 0000 PSI XXXXXXXXX

CORE SATURATION MARGIN

TSAT 0000 DEG F XXXXXXXXX
PSAT 0000 PSI XXXXXXXXX

LOOP 31 SATURATION MARGIN

REACTOR COOLANT

TSAT 000 DEG F XXXXXXXXX
PSAT 0000 PSI XXXXXXXXX

CORE EXIT TEMP

TSAT 0000 DEG F XXXXXXXXX
PSAT 0000 PSI XXXXXXXXX

LOOP 32 SATURATION MARGIN

REACTOR COOLANT

TSAT 000 DEG F XXXXXXXX
PSAT 0000 PSI XXXXXXXX

CORE EXIT TEMP

TSAT 0000 DEG F XXXXXXXX
PSAT 0000 PSI XXXXXXXX

CORE 601

RCS 602

CNMT 603

RAD 604

SYS ERROR

XXXXXXXX

448 28
384 24
320 20
256 16
192 12
128 8
64 4
0 0

0 8 16 24 32 40 48 56 64

CHANNEL B

XXXXXXXX means SUBCOOLED or SUPERHEAT

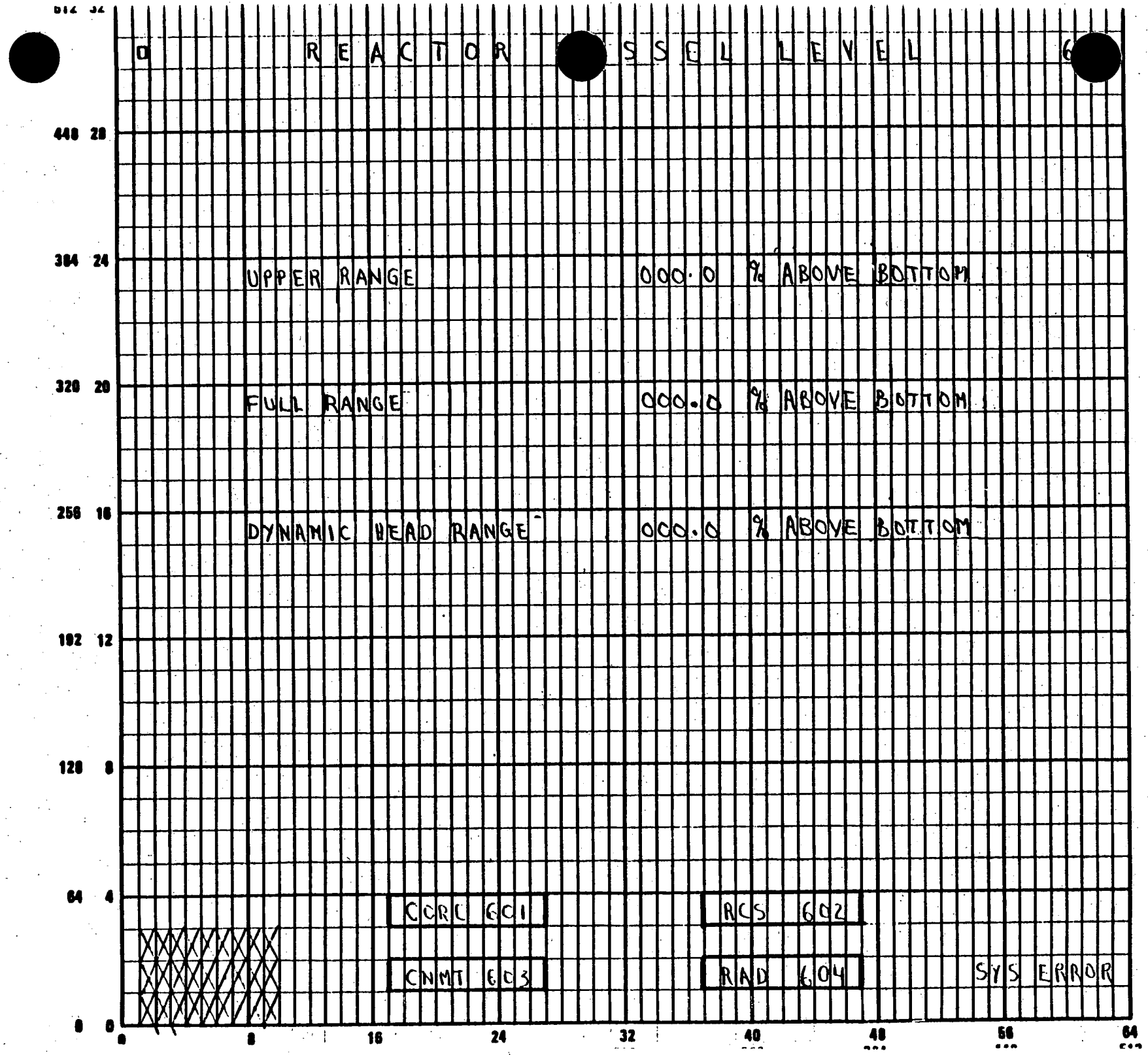
REACTOR VESSEL LEVEL
UPPER RANGE 000.0 % ABOVE BOTTOM
FULL RANGE 000.0 % ABOVE BOTTOM
DYNAMIC HEAD RANGE 000.0 % ABOVE BOTTOM
CORE 601
RCS 602
CNMT 603
RAD 604
SYS ERROR
448 28
384 24
320 20
256 16
192 12
128 8
64 4
0 0
0 8 16 24 32 40 48 56 64

CHANNEL B

CORE EXIT THERMOCOUPLES 613

CORE EXIT T/C TEMP 1

REPRESENTATIVE CET TEMP 0000 DEG F

CET SATURATION MARGIN 0000 DEG F XXXXXXXXX

QUADRANT	ID	HIGHEST TEMP	ID	NEXT HI TEMP
1	X	0000 DEG F	X	0000 DEG F
2	X	0000 DEG F	X	0000 DEG F
3	X	0000 DEG F	X	0000 DEG F
4	X	0000 DEG F	X	0000 DEG F

CORE 601 RCS 602

CNMT 603 RAD 604 SYS ERROR

XXXXXXXXX
XXXXXXXXX
XXXXXXXXX

448 28
384 24
320 20
256 16
192 12
128 8
64 4
0 0

0 8 16 24 32 40 48 56 64

ID numbers assigned vai core map page
XXXXXXXXX means SUBCOOLED or SUPERHEAT

CHANNEL B

CORE MAP

CHANNEL B

QUADRANT 3			QUADRANT 4		
	CET	TEMP		CET	TEMP
1	E14	0000	1	L14	0000
2	B13	0000	2	P13	0000
3	F12	0000	3	L12	0000
4	E11	0000	4	L11	0000
5	B10	0000	5	J10	0000
	AVG	0000		AVG	0000

PWR RANGE N42 000.0 %

PWR RANGE N44 000.0 %

LOOP 33

LOOP 34

QUADRANT 1			QUADRANT 2		
	CET	TEMP		CET	TEMP
1	B06	0000	1	J07	0000
2	E05	0000	2	L05	0000
3	G04	0000	3	K03	0000
4	B03	0000	4	P03	0000
5	E02	0000	5	L02	0000
	AVG	0000		AVG	0000

PWR RANGE N43 000.0 %

PWR RANGE N41 000.0 %

LOOP 31

LOOP 32

CORE 601

RCS 602

CNMT 603

RAD 604

SYS ERROR

A B C D E F G H J K L M N P R

1 2 3 4 5 6 7 8 9 10 11 12 13 14 15

0 64 128 192 256 320 384 448

0 4 8 12 16 20 24 28

0 8 16 24 32 40 48 56 64

D R S C

448 28

RCS HEAT REMOVAL 1

STEAM GEN NUMBER	LEVEL	OUTLET PRESSURE	AFW FLOW TO SG
31	000.0 %	0000 PSIG	000.0 GPM
32	000.0 %	0000 PSIG	SEE CH A
33	000.0 %	0000 PSIG	000.0 GPM
34	000.0 %	0000 PSIG	000.0 GPM

384 24

320 20

CST LEVEL 00.0 FEET

256 16

RCS PRESSURE CONTROL

RCS PRESSURE LOOP 31	0000	PSIG
RCS PRESSURE LOOP 34	0000	PSIG
LOWEST RCS SAT MARGIN	0000	DEG F XXXXXXXXX

192 12

RCS INVENTORY CONTROL

REACTOR VESSEL LEVEL FULL RANGE	000.0	% ABOVE BOTTOM
REACTOR VESSEL LEVEL UPPER RANGE	000.0	% ABOVE BOTTOM
PRESSURIZER LEVEL	000.0	%

128 8

64 4

CORE 601 RCS 602

CNMT 603 RAD 604 SYS ERROR

0 0

0 8 16 24 32 40 48 56 64

CHANNEL B

XXXXXXXX means SUBCOOLED or SUPERHEAT

RCS HEAT REMOVAL

LOOP	HOT LEG TEMP	COLD LEG TEMP	SG NO.	SG LEVEL
31	000.0 DEG F	000.0 DEG F	31	000.0 %
32	000.0 DEG F	000.0 DEG F	32	000.0 %
33	000.0 DEG F	000.0 DEG F	33	000.0 %
34	000.0 DEG F	000.0 DEG F	34	000.0 %

UPPER RANGE REACTOR VESSEL LEVEL 000.0 % ABOVE BOTTOM

AFW FLOW TO SG 31	000.0 GPM
AFW FLOW TO SG 32	SEE CH A
AFW FLOW TO SG 33	000.0 GPM
AFW FLOW TO SG 34	000.0 GPM
RWST LEVEL	00.0 FEET

SAFETY INJECTION FLOWS

FT926A HIGH HEAD SI BIT FLOW TO COLD LEG 33	000.0 GPM
FT926 HIGH HEAD SI FLOW TO COLD LEG 31	000.0 GPM
FT946C LOW HEAD SI FLOW TO COLD LEG 32	0000 GPM
FT946A LOW HEAD SI FLOW TO COLD LEG 34	0000 GPM

CORE 601 RCS 602

CNMT 603 RAD 604 SYS ERROR

CHANNEL B

CONTAINMENT

CONTAINMENT INTEGRITY

VC PRESSURE	000.0	PSIG
VC TEMPERATURE	000.0	DEG F
VC LEVEL	00.00	FEET
VC SUMP LEVEL	00.00	FEET
RECIRC SUMP LEVEL	00.00	FEET
HYDROGEN CONCENTRATION	00.00	%
R-25 VC HI RANGE	0.000+00	R/HR
R-26 VC HI RANGE	0.000+00	R/HR

ENGINEERING SAFEGUARDS

CCW EXCESS LETDOWN HX		SEE CH A
CCW HEAT EXCHANGER TO RCPS	XXX	XXXXXX
VC VENT ISOLATION SIGNAL	XXX	XXXXXXXX
VC ISOLATION PHASE A SIGNAL	XXX	XXXXXXXX
VC ISOLATION PHASE B SIGNAL	XXX	XXXXXXXX
SI ACTUATION SIGNAL	XXX	XXXXXXXX
STEAM LINE ISOLATION ACTUATION SIGNAL	XXX	XXXXXXXX
VC SPRAY ACTUATION SIGNAL	XXX	XXXXXXXX
VC SPRAY PUMP 31 STATUS		SEE CH A
VC SPRAY PUMP 32 STATUS		XXX
IVSWS FCV 1413	XXX	XXXXXX
FW ISOLATION SIGNAL		XXXXXXXX

CORE 601	RCS 602
CNMT 603	RAD 604

SYS ERROR

XXX XXXXXXXX means ACTUATED or NOT ACTUATED
XXXXXXX means ISOLATED or NORMAL
XXX means ON or OFF
XXX XXXXXX means CLOSED or NOT CLOSED

RA[illegible]ATION

RADIATION MONITORING

R-1 CCR	0.000E00	MR/HR
R-5 FSB	0.000E00	MR/HR
R-10 STEAM LINE PENETRATIONS	0.000E00	R/HR
R-11 VC PARTICULATE	0.000E00	CPM
R-12 VC RADIOGAS	0.000E00	CPM
R-13 PLANT VENT PARTICULATE	0.000E00	CPM
R-15 SJAE	0.000E00	CPM
R-19 SG BLOWDOWN ACTIVITY	0.000E00	CPM
R-25 VC HI RANGE	0.000E00	R/HR
R-26 VC HI RANGE	0.000E00	R/HR
R-27 WRGM	0.000E00	UCi/SEC

CORE 601 | RCS 602

CNMT 603 | RAD 604 | SYS ERROR

CHANNEL B

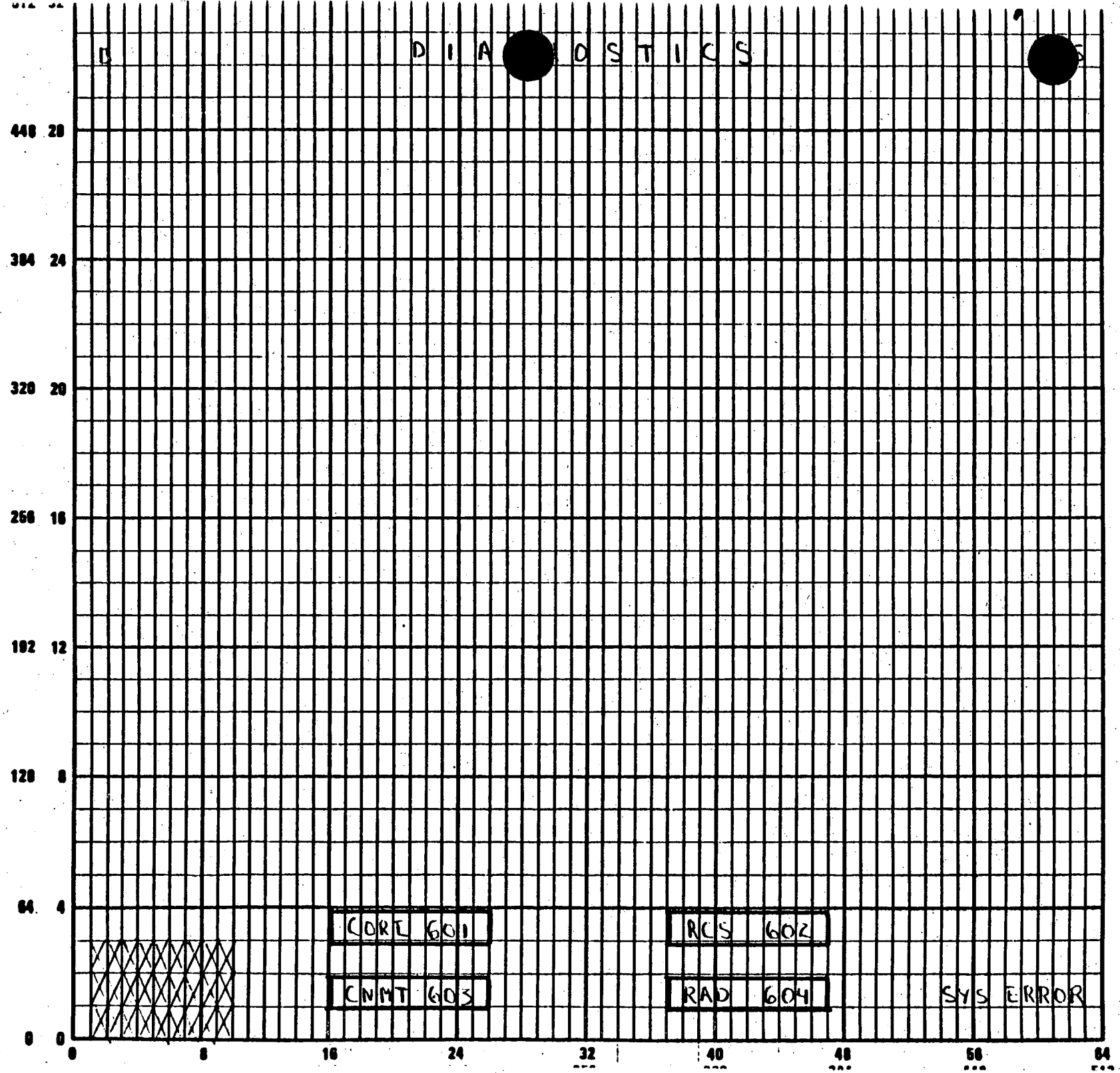
DIAGNOSTICS
448 28
384 24
320 20
256 16
192 12
128 8
64 4
0 0
0 8 16 24 32 40 48 56 64
CORE 601
RCS 602
CNMT 603
RAD 604
SYS ERROR

CHANNEL B

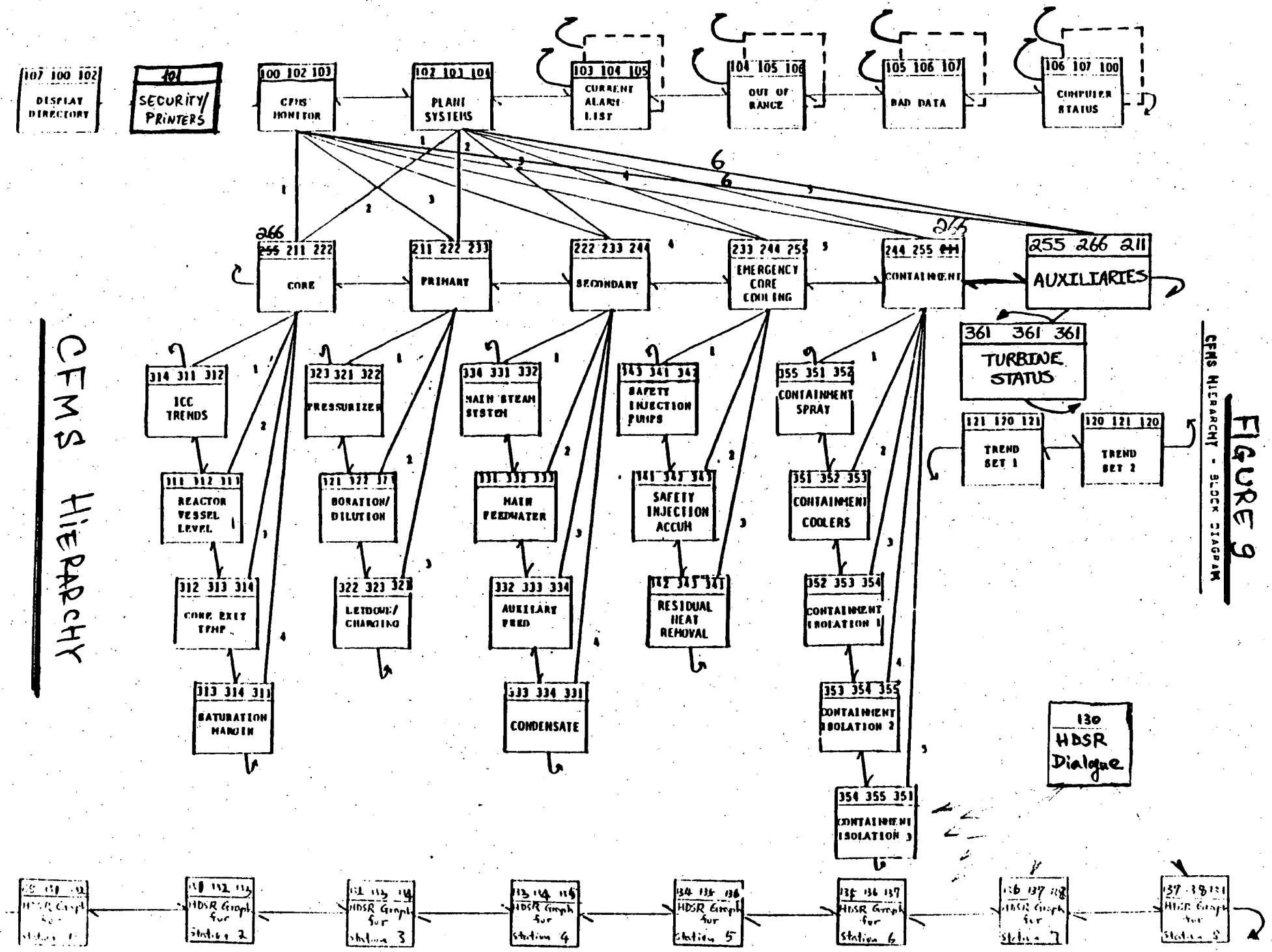

FIGURE 9
CFMS HIERARCHY - BLOCK DIAGRAM

CFMS DISPLAY SYMBOLS

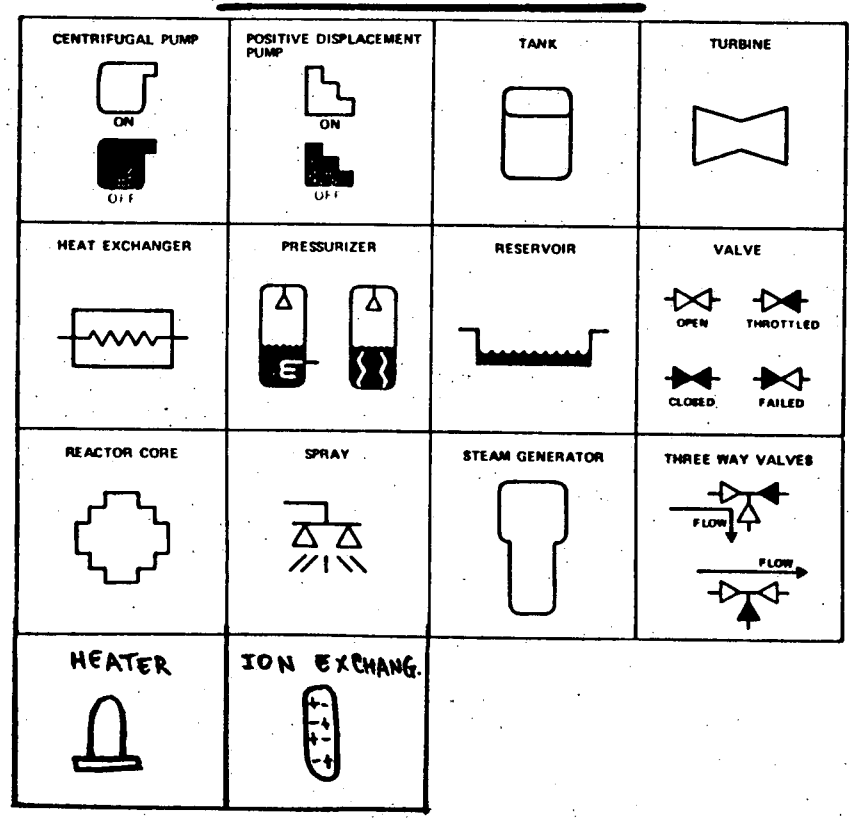

CFMS SYMBOLS, SHAPES, AND COLOR CODES

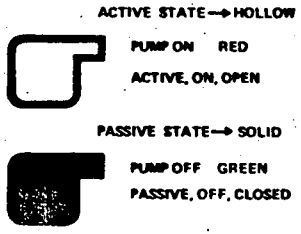

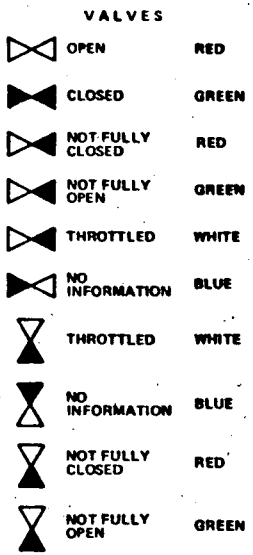

DISPLAY DIRECTORY


```
100  DISPLAY DIRECTORY
101  SECURITY/PRINTERS
102  CRITICAL FUNCTIONS
103  PLANT SYSTEMS
     211  CORE
          311  ICC TRENDS
          312  REACTOR VESSEL LEVEL
          313  CORE EXIT TEMPERATURE
          314  SATURATION MARGIN
     222  PRIMARY
          321  PRESSURIZER
          322  BORATION DILUTION
          323  LETDOWN CHARGING
     233  SECONDARY
          331  MAIN STEAM
          332  MAIN FEED
          333  AU  FEED
          334  CONDENSATE
     244  EMERGENCY CORE COOLING
          341  SAFETY INJECTION PUMPS
          342  SAFETY INJECTION ACCUMULATORS
          343  RESIDUAL HEAT REMOVAL
     255  CONTAINMENT
          351  CONTAINMENT SPRAY
          352  CONTAINMENT COOLERS
          353  CONTAINMENT ISOLATION 1
          354  CONTAINMENT ISOLATION 2
          355  CONTAINMENT ISOLATION 3
     266  AUXILIARIES
          361  TURBINE STATUS
104  CURRENT ALARM LIST
105  OUT OF RANGE LIST
106  BAD DATA LIST
107  COMPUTER STATUS LIST
120  TREND PAGE 1
121  TREND PAGE 2
```

DISP PROTECTED

HI RES BACKUP READY

FIGURE 10 (contains 36 pages)

CFMS DISPLAY PAGES

SIGNON STATUS

LEVEL 3 [redacted]

LEVEL 4 [redacted]

LEVEL 5 [redacted]

SIGNOFF [ ]

SECURITY LEVEL 5 MENU

100 101 102 103

211 222 244 255

351 352

USER FUNCTIONS PRINT VALUE

2 ADDRESS 2 VALUE1 3 EXECUTE

PRINTER CODE CP1 CP2 ETC OUTPUT CODE 1=ALARM 2=LOG ETC

	1 ALARM	2 LOG	3 TREND	4 TSC1	5 TSC2	6 TSC3	7 EOF
PRIMARY	CP1	CP2	CP3	CP4	CP5	CP6	CP7
ALTERNATE	CP2	CP3	CP2	CP6	CP6	CP5	NONE

SIGNON KEY IN PASSWORD AND PUSH RETURN
SIGNOFF PUSH STOP OR SIGNON AT ANOTHER STATION

[redacted]

[redacted]

[redacted]

WIN PROTECTED

HI RES BACKUP PERIOD

SUBCRITICALITY

CSF SAT

CORE COOLING

FR-C.1

2

HEAT SINK

? FR-H.2

3

INTEGRITY

FR-P.1

2

CONTAINMENT

? CSF SAT

INVENTORY

? FR-I.3

1

2

4

6

DISP PROTECTED

HI RES BACKUP REQ'D

SUBCRITICALITY

CSF SAT

CORE COOLING

FR-C.1

2

HEAT SINK

? FR-H.2

3 — sector number

INTEGRITY

FR-P.1

2

red CONTAINMENT

? CSF SAT

indicates that function status is based on questionable data

INVENTORY

? FR-I.3

1

2

orange

green

yellow

plant systems alarm sector number

width of box and height of characters change with color to highlight severity and to identify on black and white hard copy. The box and the characters within the box are the same color.

DISK PROTECTED

HI RES BACKUP REQ'D

PLANT SYSTEMS

1 CORE

ICC TRENDS
REACTOR VESSEL LEVEL
CORE EXIT TEMPERATURE
SATURATION MARGIN

2 PRIMARY

PRESSURIZER
BORATION DILUTION
LETDOWN CHARGING

3 SECONDARY

MAIN STEAM
MAIN FEED
AUX FEED
CONDENSATE

4 ECCS

SAFETY INJECTION PUMPS
SAFETY INJECTION ACCUMULATORS
RESIDUAL HEAT REMOVAL

5 CONTAINMENT

CONTAINMENT SPRAY
CONTAINMENT COOLERS
CONTAINMENT ISOLATION PHASE A B
CONTAINMENT ISOLATION MSTEAM VENT
CONTAINMENT ISOLATION LTDWN CHG ECCS

6 AUXILIARIES

TURBINE STATUS

CIVIL PROTECTED

HI RES BACKUP REQ'D

CORE

1 ICC TRENDS

2 REACTOR VESSEL LEVEL

WIDE RANGE A	0.0 %
WIDE RANGE B	0.0 %
UPPER RANGE A	0.0 %
UPPER RANGE B	0.0 %

3 CORE EXIT TEMP

HIGHEST TCET	543.6 F
LOWEST TCET	543.6 F

4 SATURATION MARGIN

REACTOR COOLANT SYSTEM

PCP PRESS	2241
PCP PRESS	2241
PCP PRESS	2241
PCP PRESS	2241
PCP LEVEL	44.0
PCP LEVEL	44.0
PCP LEVEL	44.0
T HOT 1 T	585.0
T HOT 2 T	585.0
T HOT 3 T	585.0
T HOT 4 T	585.0
T COLD 1 T	526.9
T COLD 2 T	526.9
T COLD 3 T	526.9
T COLD 4 T	526.9

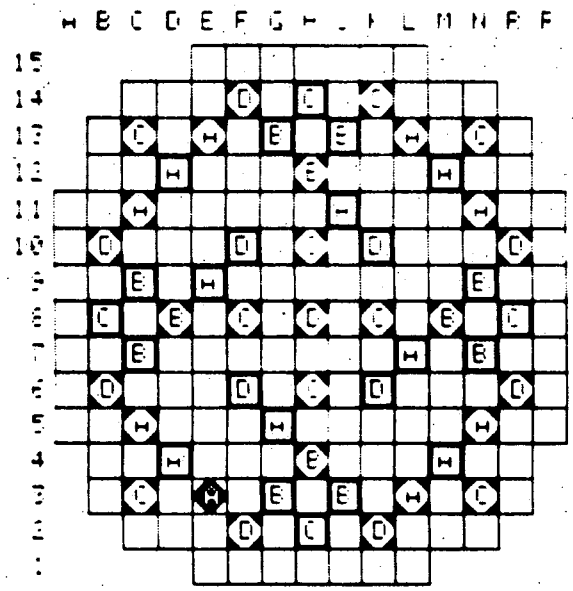

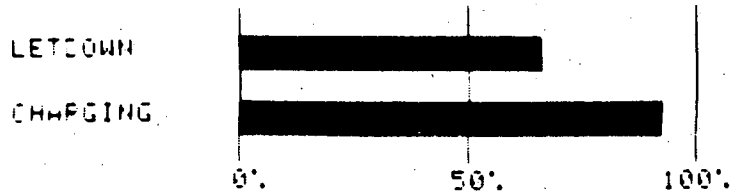

REACTOR TRIP

CHANNEL A	NO TRIP
CHANNEL B	NO TRIP

EXCORE DETECTORS

POWER RANGE 41	103.4
POWER RANGE 42	103.4
POWER RANGE 43	103.4
POWER RANGE 44	103.4
INTERMED RANGE 35	1.948-05
INTERMED RANGE 36	1.948-05
SOURCE RANGE 31	8.374+04
SOURCE RANGE 32	8.374+04
OTSP	106.0 %
OPSP	106.0 %
AUCTION THUG	550.0 F
AUCTION DT	116.1 F

CVCS

BORON FLOW	40

CCW PROTECTED

HI RES BACKUP PEDC

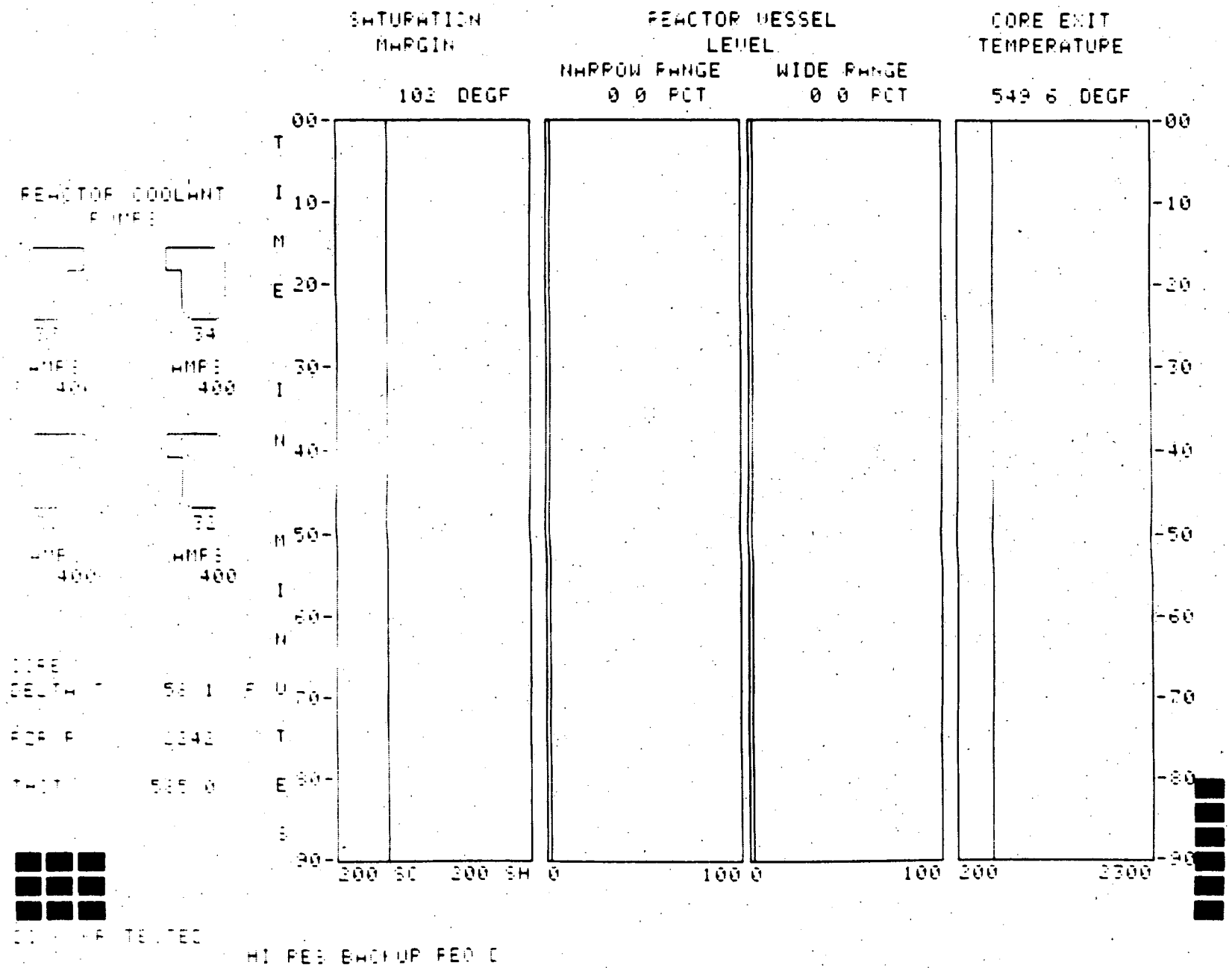
SATURATION MARGIN
103 DEGF
REACTOR VESSEL LEVEL
NARROW RANGE
0 0 PCT
WIDE RANGE
0 0 PCT
CORE EXIT TEMPERATURE
549 6 DEGF
REACTOR COOLANT
TIME
MINUTES
00
10
20
30
40
50
60
70
80
90
200 SC
200 SH
0
100
0
100
200
2300
HI PES BACKUP FED C

REACTOR VESSEL LEVEL

H

312

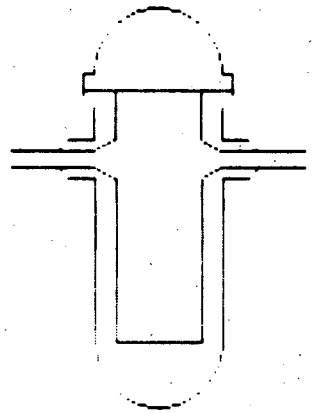

RCP PRESS

2243 PSIG
2243 PSIG
2243 PSIG
2243 PSIG

RCP LEVEL

44 %
44 %
44 %

SETPOINT

36 %

RCP STATUS

	31	32	33	34
RCP AMPS	400	400	400	400

THUG 555.9 F
DT 58.1 F

DIM PROTECTED

HI RES BACKUP RECORD

CORE EXIT TEMPERATURE

CORE TC TREF 550 0

REF JUNCTION BOX TEMP
HI TEMP 160 0
HI TEMP 160 0
EI TEMP 160 0
EI TEMP 160 0

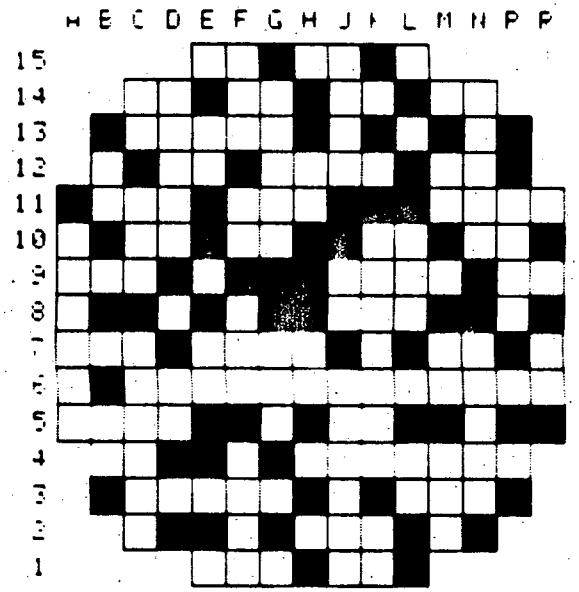

THERMOCOUPLE

LOWEST CET 549 6 F

HIGHEST CET 549 6 F

SATURATION MARGIN

HOT LEG 1 TEMP	585 0
HOT LEG 2 TEMP	585 0
HOT LEG 3 TEMP	585 0
HOT LEG 4 TEMP	585 0
COLD LEG 1 TEMP	526 9
COLD LEG 2 TEMP	526 9
COLD LEG 3 TEMP	526 9
COLD LEG 4 TEMP	526 9
LOOP 1 PRESS	2225
LOOP 4 PRESS	2225

→ RCS

66 DEG F

860 PSI

HOT RANGE DET	549 6
HOT RANGE RCP PRESS	2243
LOOP 1 PRESS	2225
LOOP 4 PRESS	2225

→ CORE EXIT

102 DEG F

1197 PSI

DIST PROTECTED

HI RES BACKUP RECORD

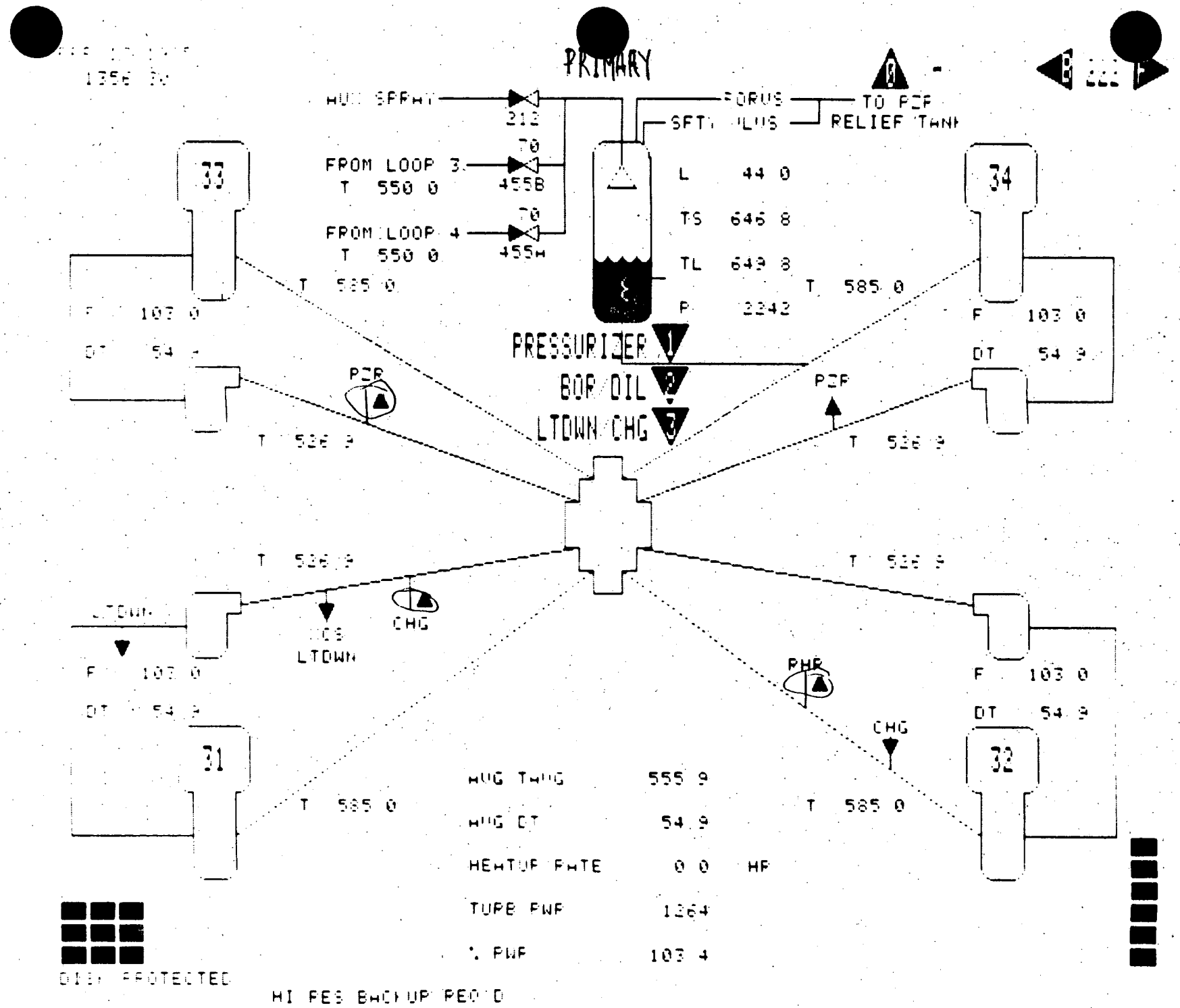
PRIMARY
HUG SPRAY
212
70
FROM LOOP 3
T 550 0
455B
70
FROM LOOP 4
T 550 0
455H
PORUS
SFTY PLUS
TO PCP
RELIEF TANK
L 44 0
TS 646 8
TL 649 8
P 2242
PRESSURIZER
BOP OIL
LTDOWN CHG
33
34
31
32
T 585 0
F 103 0
DT 54 9
T 536 9
PCP
CHG
LTDOWN
PHR
HUG THUG 555 9
HUG DT 54 9
HEATUP RATE 0 0 HR
TURB PWR 1264
% PWR 103 4
DIST PROTECTED
HI RES BACKUP REQ'D

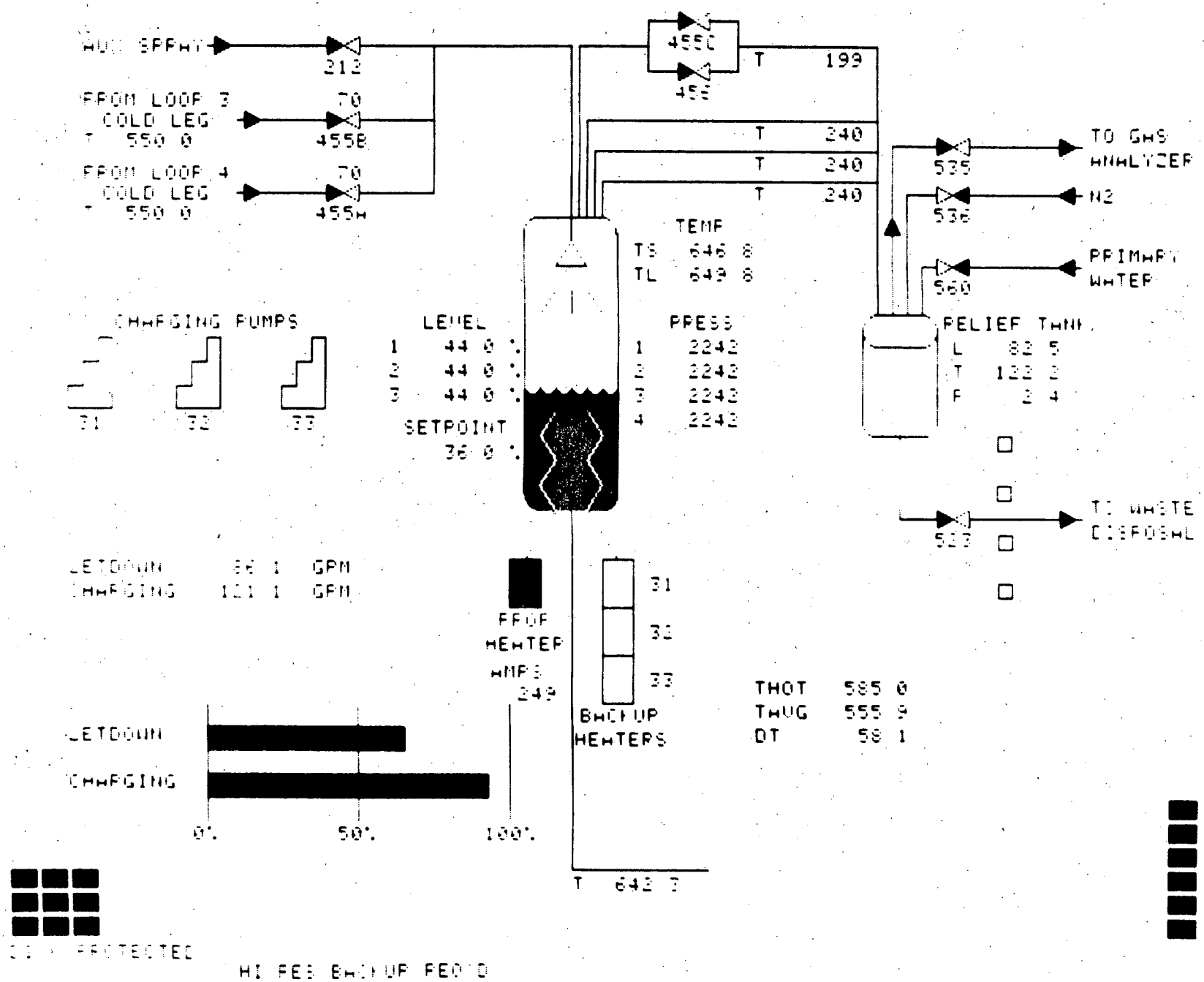
PRESSURIZER
AUX SPRAY
212
FROM LOOP 3
COLD LEG
T 550 0
70
455B
FROM LOOP 4
COLD LEG
T 550 0
70
455H
455C
455
T 199
T 240
T 240
T 240
TO GAS
ANALYZER
535
N2
536
PRIMARY
WATER
560
TEMP
TS 646 8
TL 649 8
CHARGING PUMPS
31
32
33
LEVEL
1 44 0 %
2 44 0 %
3 44 0 %
SETPOINT
36 0 %
PRESS
1 2243
2 2243
3 2243
4 2243
RELIEF TANK
L 82 5
T 122 2
P 3 4
TO WASTE
DISPOSAL
523
LETDOWN 86 1 GPM
CHARGING 121 1 GPM
PROP
HEATER
AMPS
249
31
32
33
BACKUP
HEATERS
THOT 585 0
TAVG 555 9
DT 58 1
LETDOWN
CHARGING
0%
50%
100%
T 643 3
HI PRES BACKUP PERIOD

BORATION/DILUTION

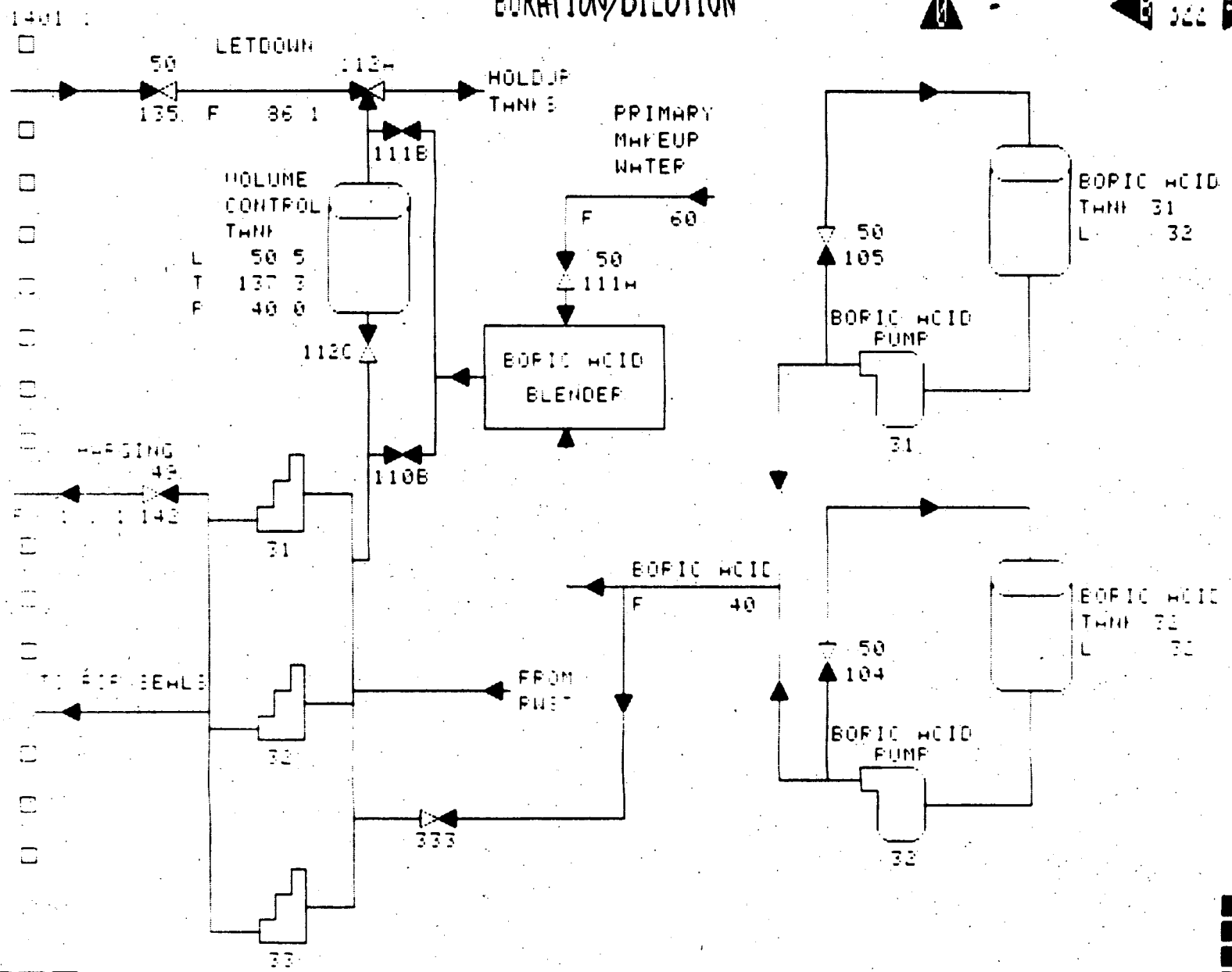

HI PRESSURE PUMP

LETDOWN/CHARGING

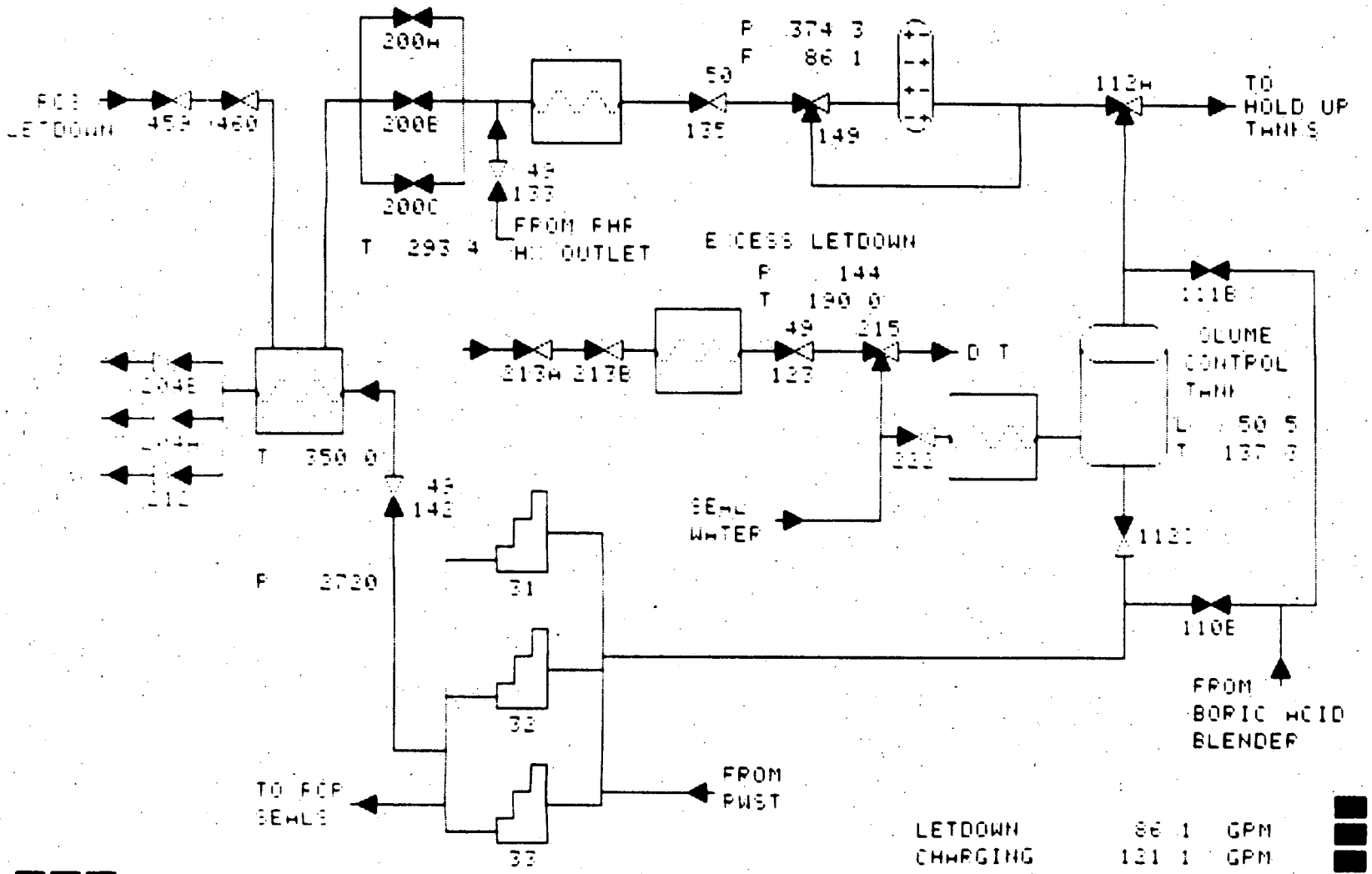

HI PRESSURE PRO D

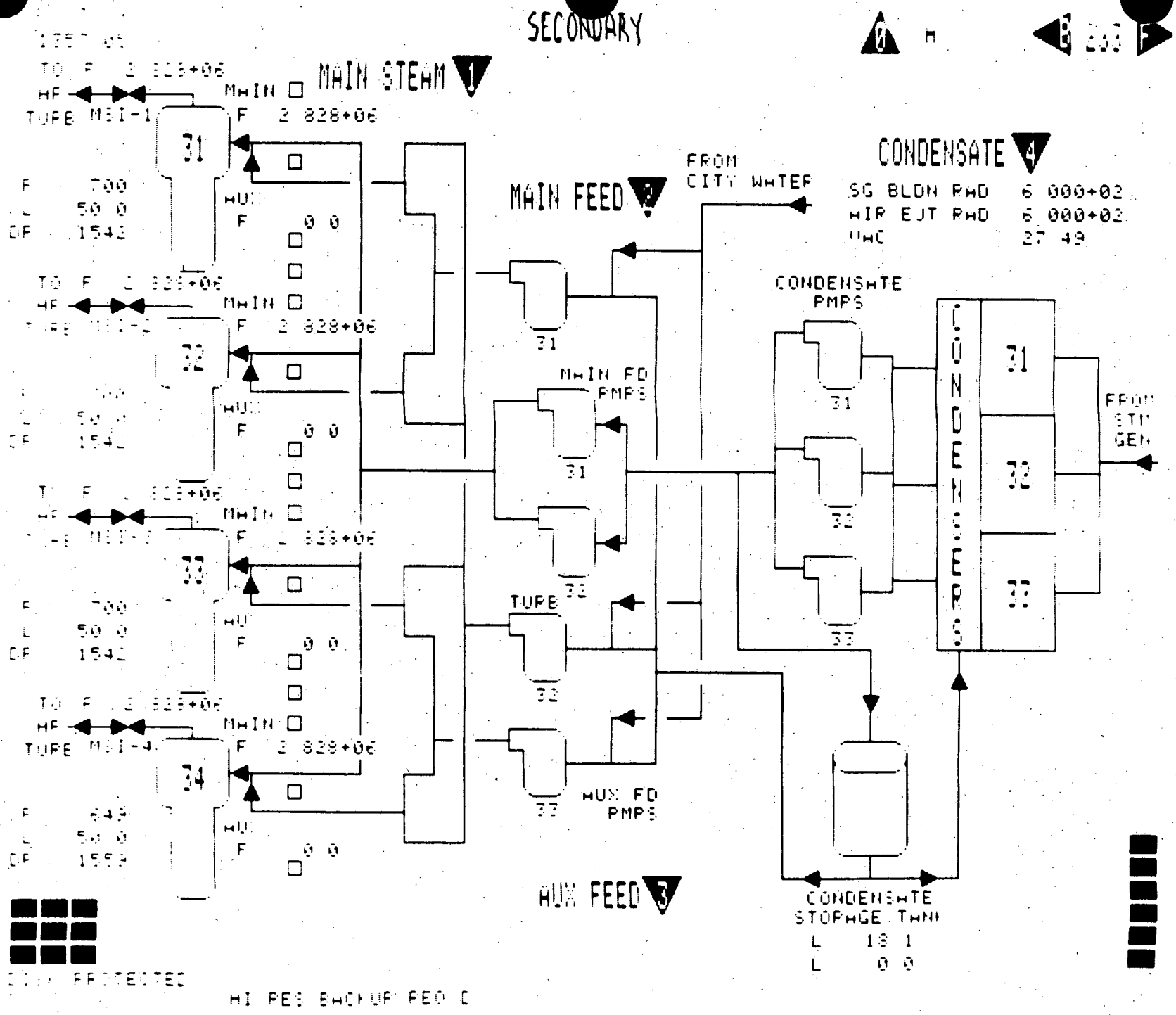
SECONDARY
MAIN STEAM 1
MAIN FEED 2
HUX FEED 3
CONDENSATE 4
FROM CITY WATER
SG BLDN PWD 6 000+02
AIR EJT PWD 6 000+03
CONDENSATE PMPS
MAIN FD PMPS
HUX FD PMPS
CONDENSER
FROM STM GEN
CONDENSATE STORAGE TANK
HI PRS BACKUP FEED

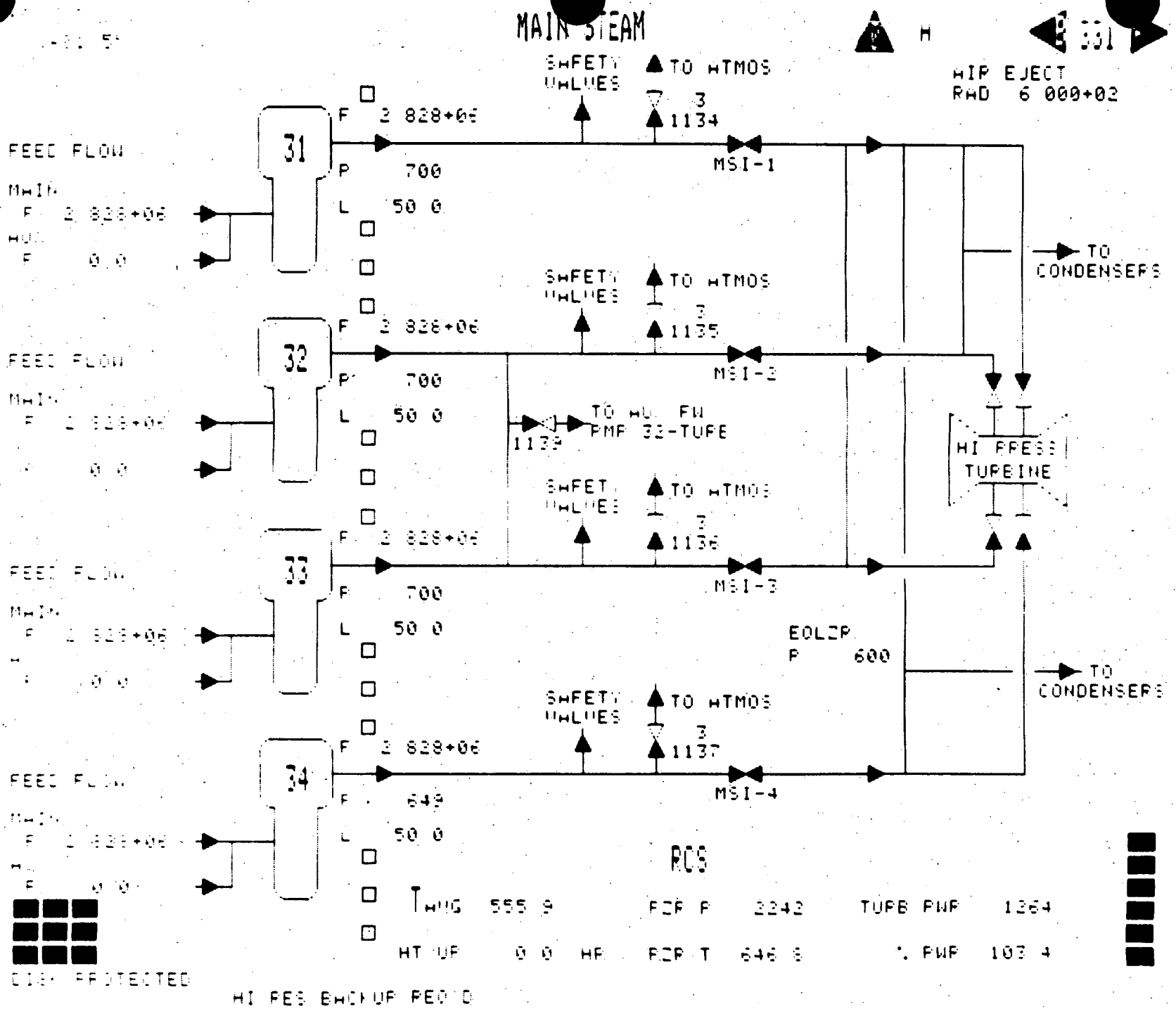
MAIN STEAM
331
HIP EJECT
RAD 6 000+02
SAFETY VALVES
TO ATMOS
3
1134
MSI-1
31
FEED FLOW
F 2 828+06
P 700
L 50 0
TO CONDENSERS
1135
MSI-2
32
TO AUX FW PMP 33-TURB
1139
HI PRESS TURBINE
1136
MSI-3
33
EOLZR
P 600
1137
MSI-4
34
649
RCS
TAVG 555 9
RCR P 2242
TURB PWR 1364
HT UP 0 0
RCR T 646 6
% PWR 103 4
HI PRES BACKUP PEDESTAL

MAIN FEED

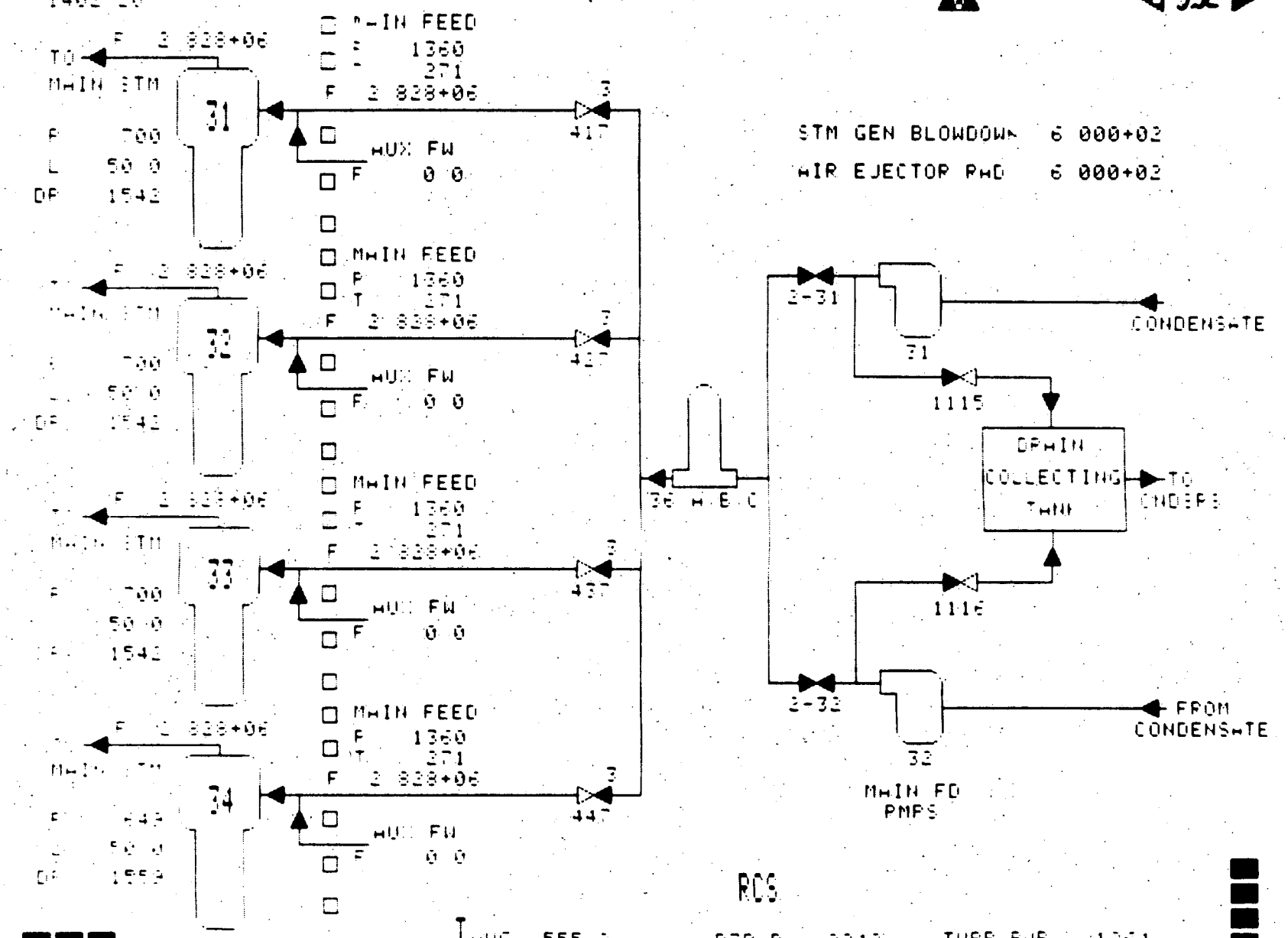
MAIN FEED
F 3 828+06
TO MAIN STM
P 700
L 50 0
DP 1542
31
MAIN FEED
P 1360
T 271
F 3 828+06
AUX FW
F 0 0
417
32
33
34
447
STM GEN BLOWDOWN 6 000+02
AIR EJECTOR PKG 6 000+02
3-31
3-32
1115
1116
CONDENSATE
DRAIN COLLECTING TANK
TO CONDSR
FROM CONDENSATE
MAIN FD PMPS
RCS
TAVG 555 3
PCR P 2243
TURB PWR 1364
HT UP 0 0
HP
PCR T 646 8
% PWR 103 4
DIV PROTECTED
HI PES BACKUP FED D

AUX FEED

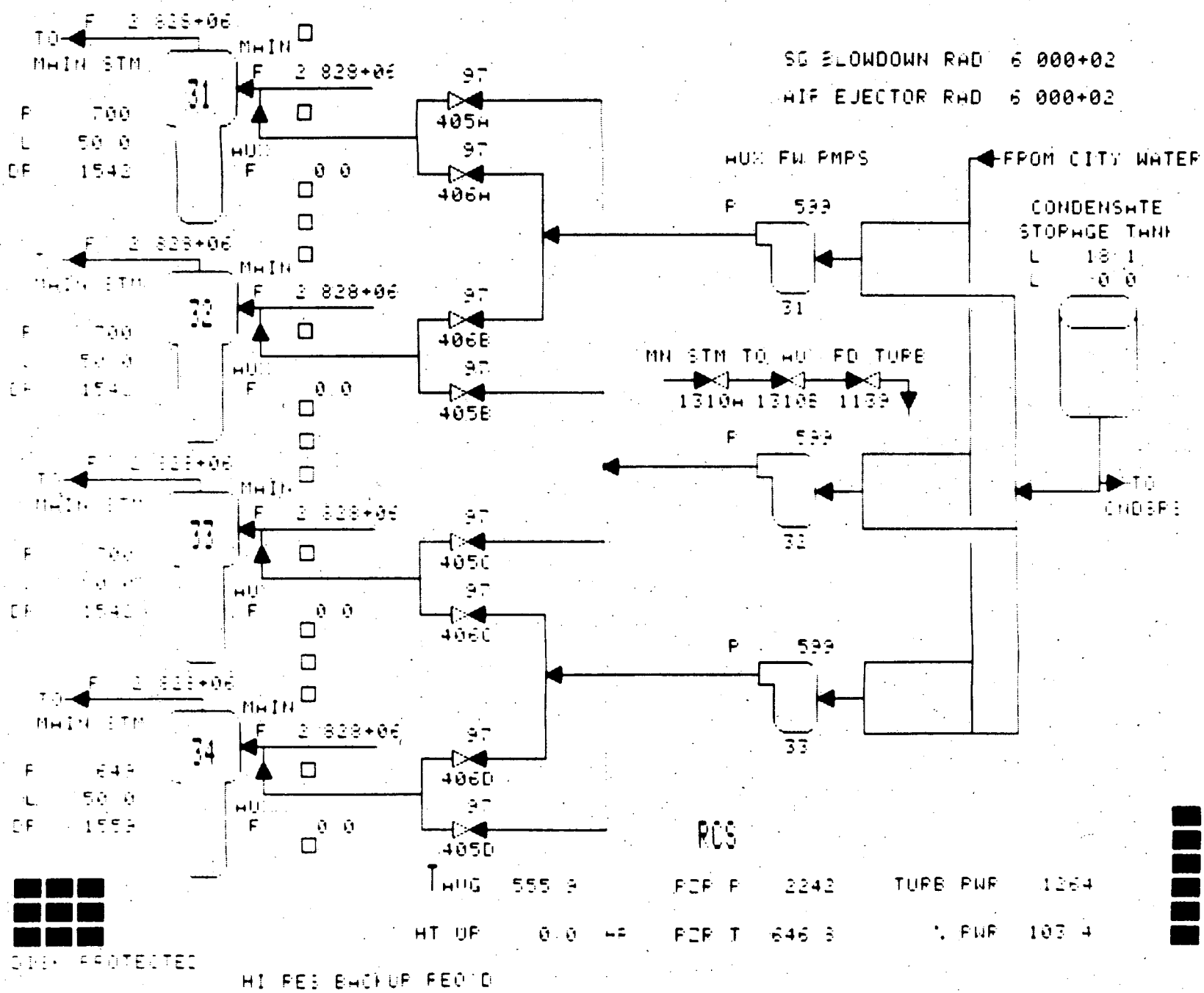
SG BLOWDOWN RAD 6 000+02
HIF EJECTOR RAD 6 000+02
AUX FW PMPS
FROM CITY WATER
CONDENSATE STORAGE TANK
TO CNDSR
MN STM TO AUX FD TURB
1310A 1310B 1139
31
32
33
34
405A
406A
406B
405B
405C
406C
406D
405D
MAIN STM
MAIN
AUX
RCS
AUG 555 3
HT UP 0 0 MW
PCR P 2243
PCR T 646 3
TURB PWR 1364
% PWR 103 4
HI PRES BACKUP FEED

CONDENSATE

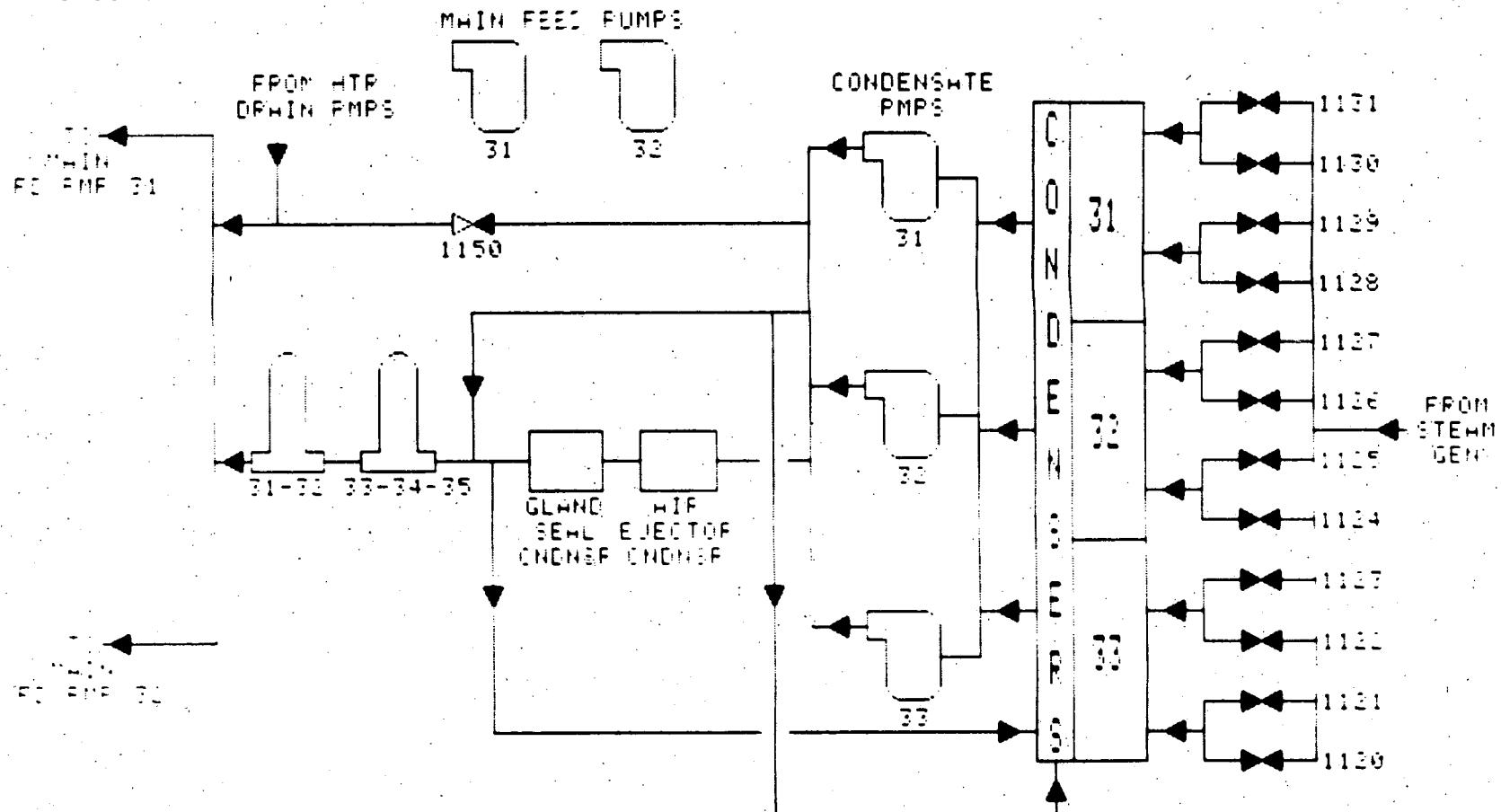
MAIN FEED PUMPS
31
32
FROM HTR DRAIN PMPS
MAIN FD PMP 31
1150
CONDENSATE PMPS
31
32
33
CONDENSERS
31
32
33
1131
1130
1129
1128
1127
1126
1125
1124
1123
1122
1121
1120
FROM STEAM GEN
31-32
33-34-35
GLAND SEAL CNDNSR
HIP EJECTOR CNDNSR
HIP EJECTOR RHO 6 000+03
SG BLOWDOWN RHO 6 000+03
RHO 37 49
CONDENSATE STORAGE TANK
L 18 1
L 0 0
RCS
THUG 555 9
PCR P 2242
TURB PWR 1264
HT UP 0 0 HP
PCR T 646 8
% PWR 103 4
TO MAIN FW PMPS
HI FES BACKUP FED 0
PROTECTED

ENERGENCY CORE COOLING

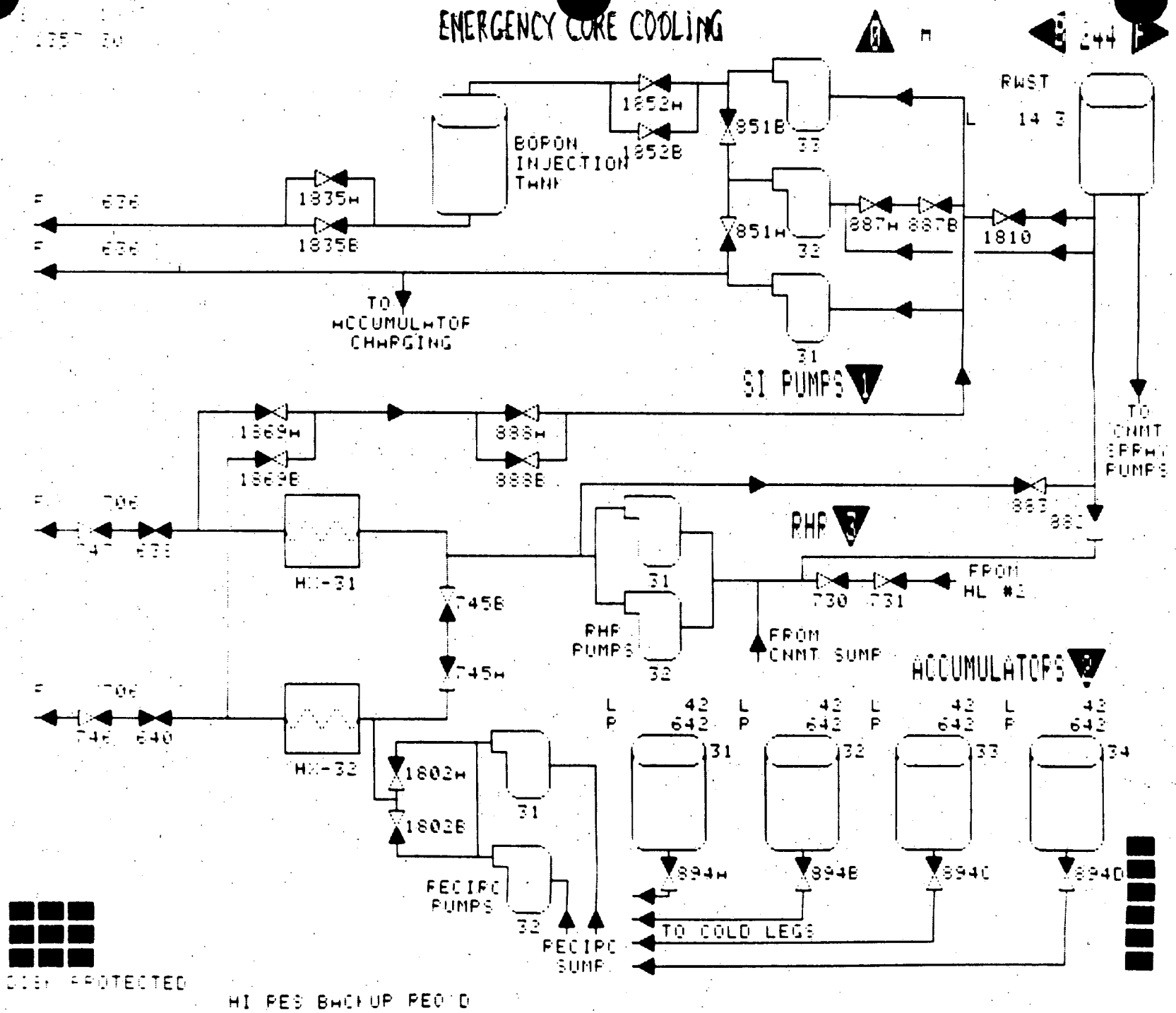

SAFETY INJECTION PUMPS

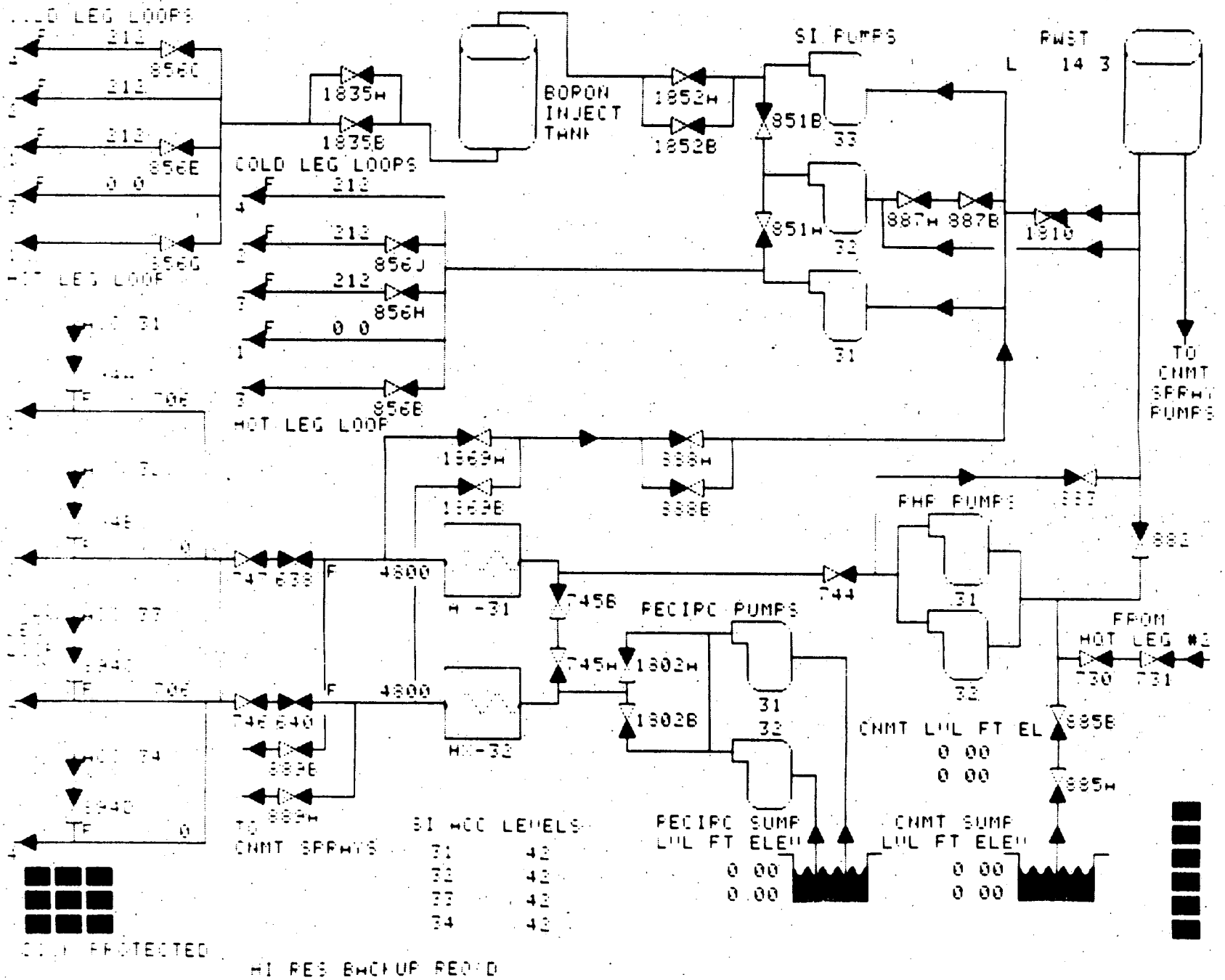

SAFETY INJECTION ACCUMULATORS

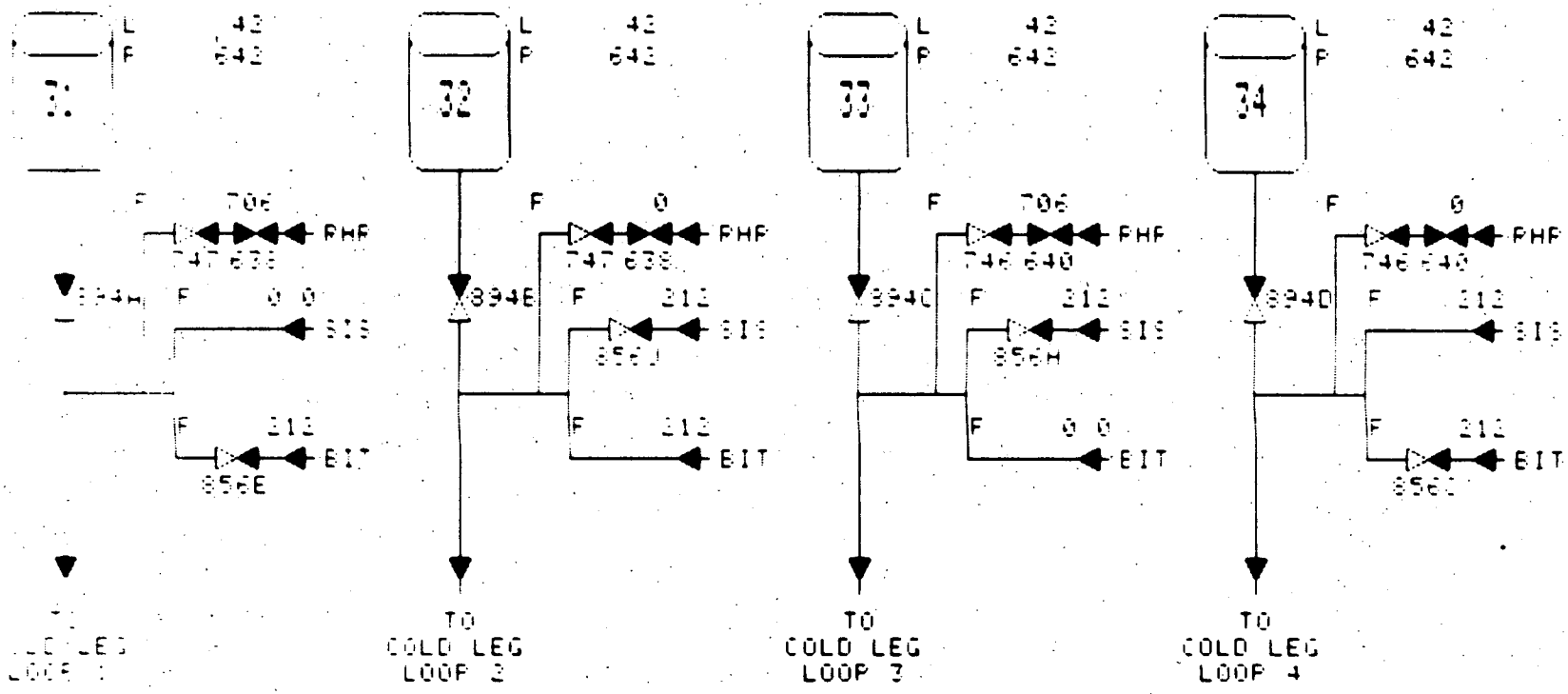

PROTECTED

HI PRS BACKUP PRO C

RESIDUAL HEAT REMOVAL

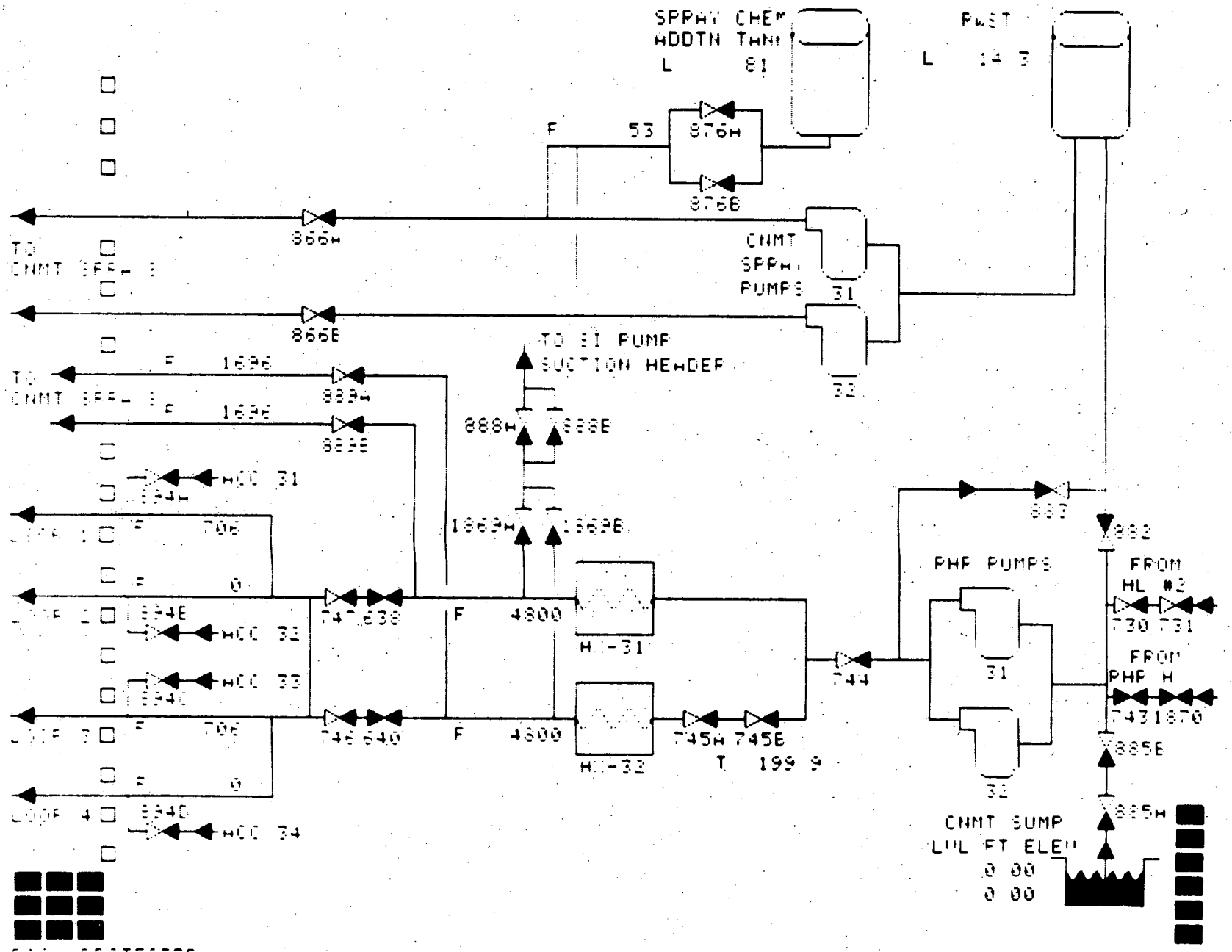

CONTAINMENT

SPRAY FLOW 1
SPRAY FLOW 2

CNMT HI RAD 0 000+00
CNMT HI RAD 0 000+00

CNMT AIR PART 6 000+03
CNMT RAD GAS 6 000+03
CNMT FC LT MN1 5 495+03
CNMT FC LT MN2 5 495+03
CNMT SP ELEV 5 041+01

CC LRT1 LT MN 5 495+03
CC LRT2 LT MN 5 495+03
CIR NET DIFF 5 991+03
WCS SHE MNML 5 495+01

CNMT ISOLATION

3 PHASE A
PHASE B

4 MAIN STEAM
VENT ISOLATION
PERSONNEL LOCKS

5 ECCS ISOLATION
LETDOWN CHARGING ISO
MISC VALVES ISO

1 SPRAY

F 1696 F 1696

DOME TEMP 85 0

CNMT HI PRESS 0 0
CNMT HI PRESS 0 0

2 FAN COOLER STATUS

31 32 33 34 35

HYDROGEN CONCENTRATION
0 00
0 00

CNMT LVL FT EL
0 00
0 00

RECIRC SUMP
LVL FT EL
0 00
0 00

CNMT SUMP
LVL FT EL
0 00
0 00

PLANT VENT HI RAD
0 000+00
PLANT VENT PARTICULATE
6 000+03
PLANT VENT RAD
WASTE GAS
5 991+03
AIR EJECT RAD
6 000+03
STM GEN BLOWDOWN
6 000+03

CONTROL RM
7 340+01
CHG PMP RM
5 041+01
FUEL STRG RM
1 740+01
SAMPLE RM
4 983+01
INC INST RM
4 983+01
DRUMMING RM
4 983+01
STM LINE PEN
0 000+00

DIN PROTECTED

HI RES BACKUP RECORD

CONTAINMENT SPRAY

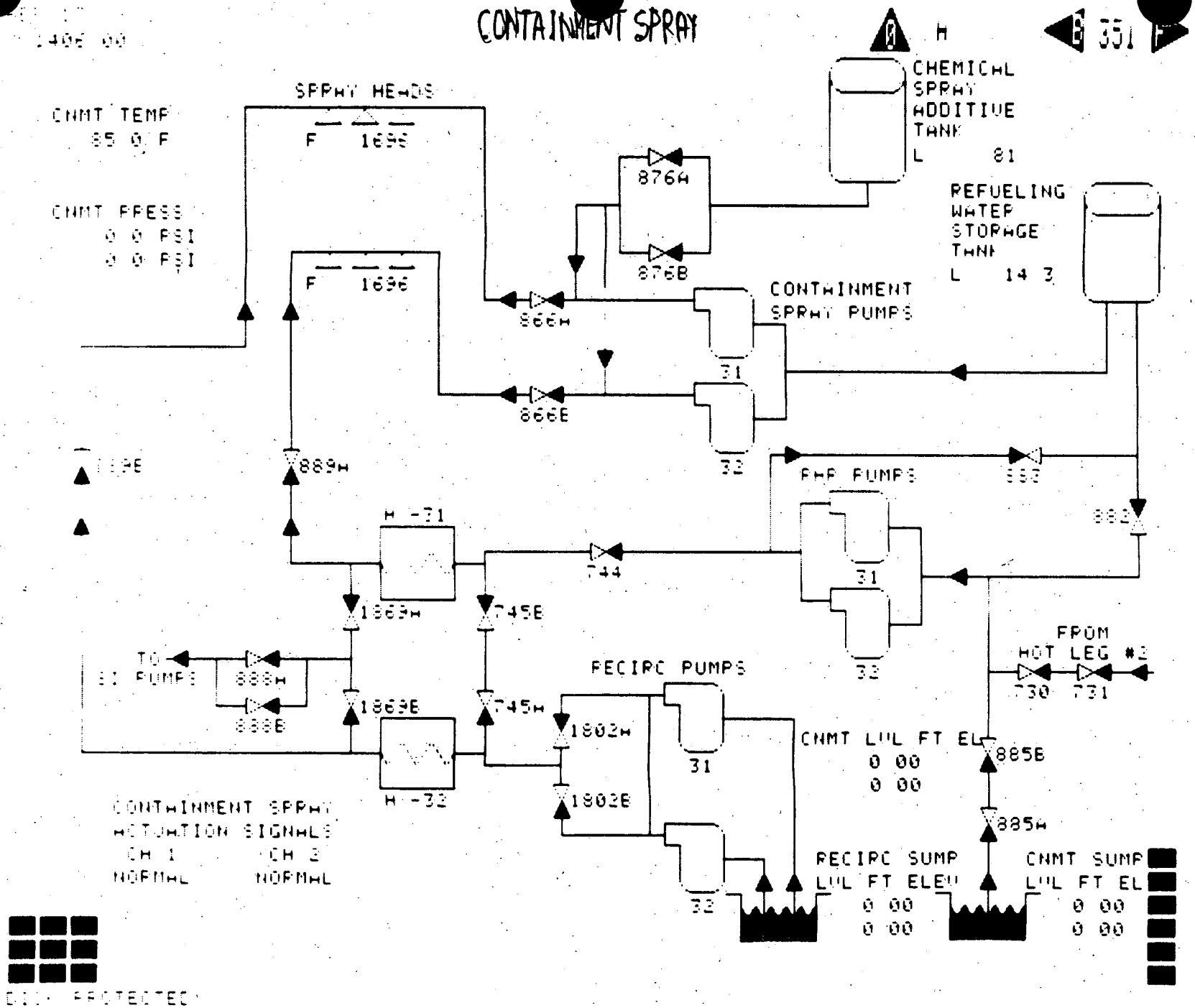

CONTAINMENT COOLERS

FAN31	FLOW	1877
FAN32	FLOW	1877
FAN33	FLOW	1877
FAN34	FLOW	1877
FAN35	FLOW	1877

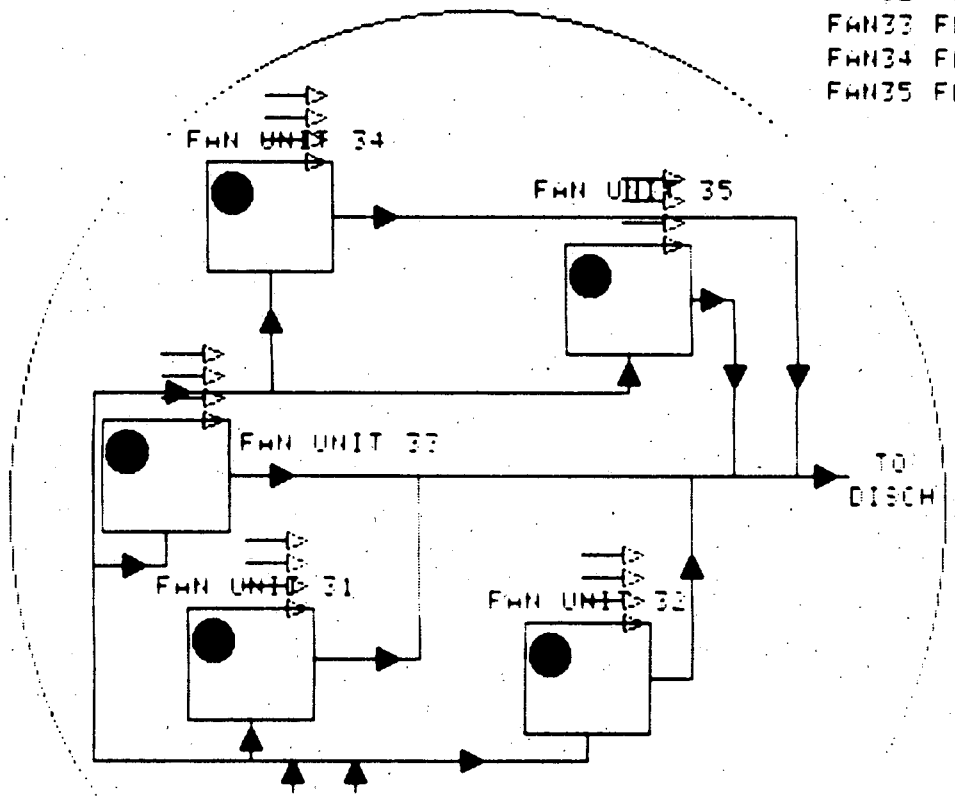

CNMT HI FWD MN	0	000+00
CNMT HI FWD MN	0	000+00
CNMT HIR FWRT	6	000+03
CNMT FWDWGHE	6	000+03
CNMT FC LO MN1	5	495+03
CNMT FC LO MN2	5	495+03
CNMT 30 ELH	5	041+01

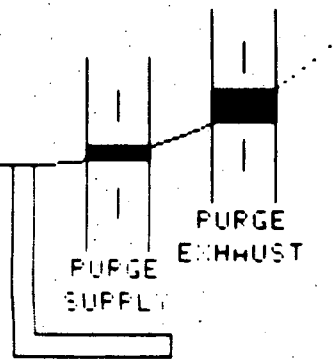

DOME TEMP	85	0
CNMT PRESS A	1	30
CNMT PRESS B	1	30
CNMT PRESS C	1	29
CNMT PRESS D	0	39
CNMT PRESS E	0	39
CNMT PRESS F	0	39
CNMT HI PRESS	0	0
CNMT HI PRESS	0	0

CIS PROTECTED

HI PES BACKUP PED D

CONTAINMENT ISOLATION 1

PHASE "A" ISOLATION (CIAS)

CCW TO EXC LTDN HX ISO VLVS
791D 793D

SUME TO CONTAINMENT
1229 1230 796D 798D

CNMT SUMPS TO WDS HLD TK IN LTDN FLOW CONTROL VLVS
1727 1728 200A 200B

PZR CNMT ISO VALVE
519 552 200C

RCDT TO WDS HLD UP TK IN LTDN CNMT ISO VLV
1701 1705 201 202

RCDT VENT HEADER IN INSTRUMENTS AIR RHR SAMPLES
1786 1787 1228 959D

PHASE "B" ISOLATION (CIBS)

RET FROM MOTOR BEARINGS
784 786

RET FR RCP THERMAL BARRIER
789 625

CCW TO RCPS CCW TO EXC LTDN HX
769 797

RCP WATER SEAL RET
222

DISP PROTECTED

HI RES BACKUP REQ'D

CONTAINMENT ISOLATION 2

STEAM LINE ISOLATION (SLIS)

	SG-31	SG-32	SG-33	SG-34
PILOT OPERATED RELIEF VALVE	3 1134	3 1135	3 1136	3 1137
MAIN STEAM ISOLATION VALVE	MSI-1	MSI-2	MSI-3	MSI-4
MAIN FEED ISOLATION VALVE	3 417	3 427	3 437	3 447
AUXILIARY FEED ISOLATION VALVE	97 405A	97 405B	97 405C	97 405D
AUXILIARY FEED ISOLATION BYPASS VLV	97 406A	97 406B	97 406C	97 406D
MAIN FEED PUMP DISCHARGE VALVE	2-31		2-32	

CNMT VENT ISOLATION (CVIS)

INLET DUCTS

1170 1171

OUTLET DUCTS

1172 1173

CONTAINMENT PRES RELIEF VLVS

1190 1191 1192

PERSONNEL LOCKS

CLSD CLSD

CLSD CLSD

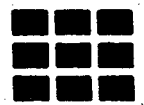

DIN PROTECTED

HI PRES BACKUP PEDD

CONTAINMENT ISOLATION 3

ECCS ISOLATION

SAFETY INJECTION

SAFETY INJECTION

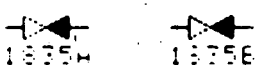

RHR

RETURN TO RHR

CNMT SUMP

CNMT SPRAYS

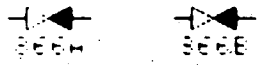

CHARGING LETDOWN ISOLATION

CHARGING

LETDOWN

EXCESS LETDOWN

MISC

OXYGEN MAKEUP

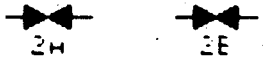

CCW TO RCPS

COLD LEG TESTED

HI RES BACKUP REQ'D

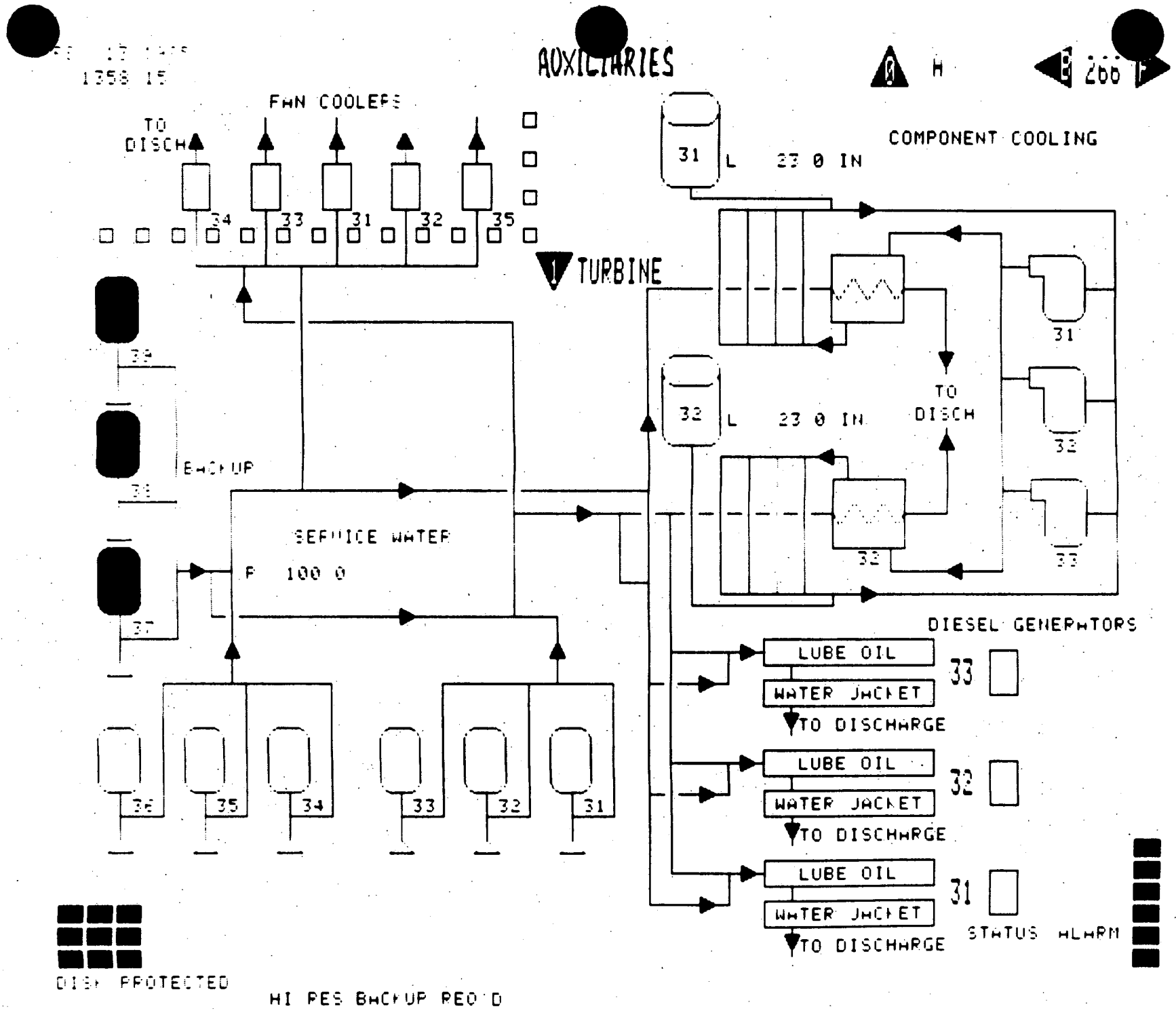
AUXILIARIES
H
266
FAN COOLERS
TO DISCH
34
33
31
32
35
TURBINE
COMPONENT COOLING
31
L 23 0 IN
32
L 23 0 IN
TO DISCH
31
32
33
BACKUP
SERVICE WATER
P 100 0
DIESEL GENERATORS
LUBE OIL
WATER JACKET
TO DISCHARGE
33
LUBE OIL
WATER JACKET
TO DISCHARGE
32
LUBE OIL
WATER JACKET
TO DISCHARGE
31
STATUS ALARM
DISP PROTECTED
HI PES BACKUP REQ'D

TURBINE STATUS

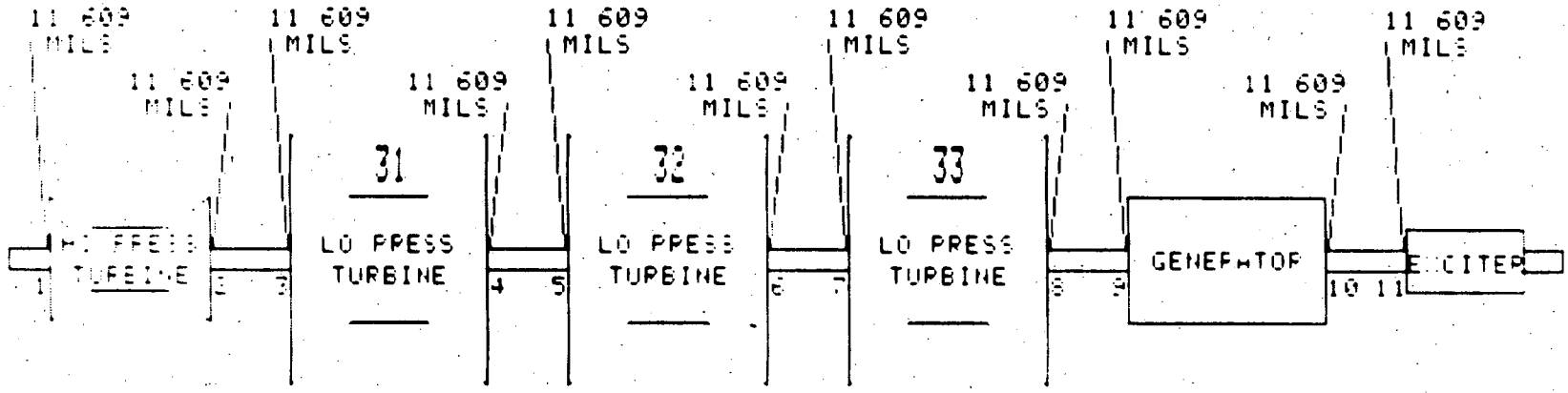

ROTOR AXIAL POSITION 0 060
TURBINE GENERATOR RPM 1805

STEAM PRESSURES

SG 31	700
SG 32	700
SG 33	700
SG 34	649

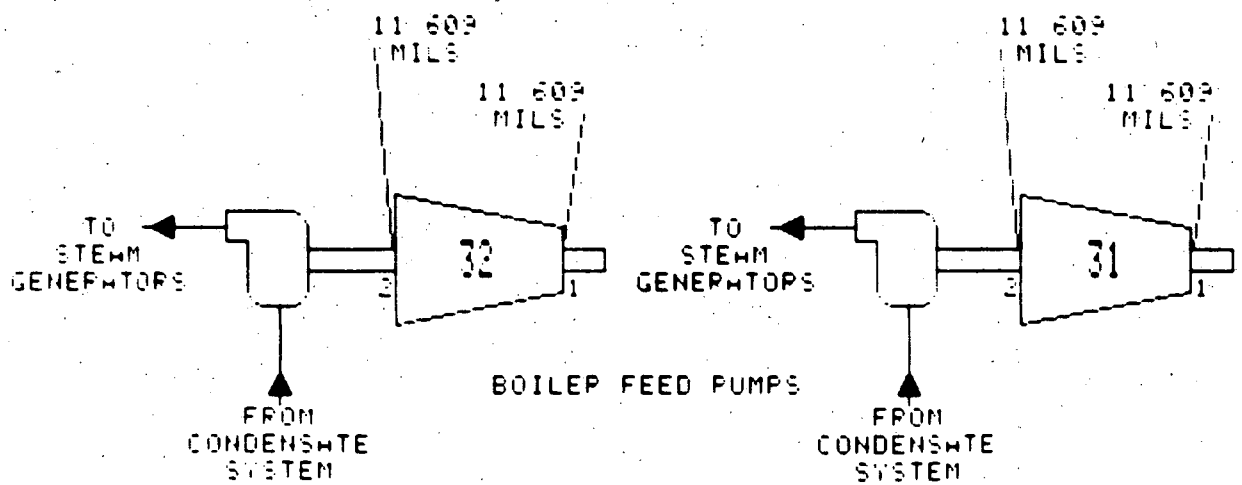

DIST PROTECTED

HI PRES BACKUP PEDD

1026 10	LOLO	REF JUNCTION BOX 1A TEMP	154.9 155.0	T0087A	313
1026 10	ALRM	ESSENTIAL CCW LOOP ISO VLV-P		ZH769D	353
1026 10	ALRM	ESSENTIAL CCW LOOP ISO VLV-P		ZH797D	353
1026 10	HIHI	AVERAGE T HOT	615.5 600.0	KAVGTH	311
1026 10	HIHI	HIGHEST T HOT	617.4 600.0	THOTMAX	321
1026 10	ALRM	SAFETY INJECTION SIGNAL		SSID	103
1026 10	ALRM	SI ACTUATION SIGNAL		SSI2D	
1026 10	HIHI	LOOP #4 HOT LEG TEMPERATURE	616.6 600.0	T0479A	211
1026 10	HIHI	LOOP #3 HOT LEG TEMPERATURE	611.5 600.0	T0459A	211
1026 10	HIHI	LOOP #2 HOT LEG TEMPERATURE	616.6 600.0	T0439A	211
1026 10	HIHI	LOOP #1 HOT LEG TEMPERATURE	617.4 600.0	T0419A	211
1026 10	HIHI	IN CORE TEMP B06	743.6 700.0	T0035A	313
1026 10	HIHI	STEAM GENERATOR #34 W.R. LEV	59.6 57.0	L0463A	
1026 10	HIHI	STEAM GENERATOR #33 W.R. LEV	62.2 57.0	L0443A	
1026 10	HIHI	STEAM GENERATOR #32 W.R. LEV	64.5 57.0	L0423A	
1026 10	HIHI	STEAM GENERATOR #31 W.R. LEV	67.2 57.0	L0403A	

HI RES BACKUP REQ'D

BAD DATA

OUT OF RANGE LIST

OORL	IN CORE TEMP P03	0.0	T0030A	313
OORL	STM GEN #34 MAIN STEAM PRESS	0	P0461A	
OORL	PMW TO BLENDER VALVE	0	ZT111AA	322
OORL	BA TANK #32 RETURN VALVE	0	ZT105A	322
OORL	BA TANK #31 RETURN VALVE	0	ZT104A	322
OORL	LOW PRESSURE LETDOWN VALVE	0	ZH135D	322
OORL	OPS CHANNEL 4 ACTUAL PRESS	0	Y9062A	
OORL	OPS CHANNEL 4 DP PRESS	0	Y9061A	
OORL	OPS CHANNEL 4 PROGRAMMED PRE	0	Y9060A	
OORL	OPS CHANNEL 2 ACTUAL PRESS	0	Y9059A	
OORL	OPS CHANNEL 2 DP PRESS	0	Y9058A	
OORL	OPS CHANNEL 2 PROGRAMMED PRE	0	Y9057A	
OORL	OPS CHANNEL 1 ACTUAL PRESS	0	Y9056A	
OORL	OPS CHANNEL 1 DP PRESS	0	Y9055A	
OORL	OPS CHANNEL 1 PROGRAMMED PRE	0	Y9054A	
OORL	STACK DISCHARGE AIR FLOW	0	Y9051A	

HI RES BACKUP REQ'D

BAD DATA

BAD DATA LIST

BH	ENT	ION	SS21XD	351
BH	ESSI		LR004B	211
BH	ESSI		LR003B	
BH	HCTO	GE	LR002B	211
BH	ENT	TION	HCMCA	255
BH	ENT		L1255A	255
BH	ENT		L1253A	255
BH	HTIO		L1251A	255
BH	ENT	E	P1421A	255
BH	LOW		F1200A	233
BH	REC	#2 F	F946CA	341
BH	REC	#4 F	F946AA	341
BH	HTED	D LE	F926AA	341
BH	TO C		F9260A	341
BH	EL		L0933A	244
BH	ENT		T1203A	255

HI RES BACKUP REQ'D

BAD DATA

```
NOV 13 1036:06 MASTER CANNOT SWITCH IOS,STATUS=    9000
NOV 13 1036:08 MASTER CANNOT SWITCH IOS,STATUS=    9000
NOV 13 1036:10 MASTER CANNOT SWITCH IOS,STATUS=    9000
NOV 13 1036:12 MASTER CANNOT SWITCH IOS,STATUS=    9000
NOV 13 1036:14 MASTER CANNOT SWITCH IOS,STATUS=    9000
NOV 13 1036:16 MASTER CANNOT SWITCH IOS,STATUS=    9000
NOV 13 1036:18 MASTER CANNOT SWITCH IOS,STATUS=    9000
NOV 13 1036:20 MASTER CANNOT SWITCH IOS,STATUS=    9000
NOV 13 1036:22 MASTER CANNOT SWITCH IOS,STATUS=    9000
NOV 13 1036:24 MASTER CANNOT SWITCH IOS,STATUS=    9000
NOV 13 1036:26 MASTER CANNOT SWITCH IOS,STATUS=    9000
NOV 13 1036:28 MASTER CANNOT SWITCH IOS,STATUS=    9000
NOV 13 1036:30 MASTER CANNOT SWITCH IOS,STATUS=    9000
NOV 13 1036:32 MASTER CANNOT SWITCH IOS,STATUS=    9000
NOV 13 1036:34 MASTER CANNOT SWITCH IOS,STATUS=    9000
NOV 13 1036:36 MASTER CANNOT SWITCH IOS,STATUS=    9000
NOV 13 1036:38 MASTER CANNOT SWITCH IOS,STATUS=    9000
NOV 13 1036:40 MASTER CANNOT SWITCH IOS,STATUS=    9000
NOV 13 1036:42 MASTER CANNOT SWITCH IOS,STATUS=    9000
NOV 13 1036:44 MASTER CANNOT SWITCH IOS,STATUS=    9000
NOV 13 1036:46 MASTER CANNOT SWITCH IOS,STATUS=    9000
NOV 13 1036:48 MASTER CANNOT SWITCH IOS,STATUS=    9000
NOV 13 1036:50 MASTER CANNC
                       OT SWITCH IOS,STATUS=    9000
NOV 13 1035:42 MASTER CANNOT SWITCH IOS,STATUS=    9000
NOV 13 1035:44 MASTER CANNOT SWITCH IOS,STATUS=    9000
NOV 13 1035:46 MASTER CANNOT SWITCH IOS,STATUS=    9000
NOV 13 1035:48 MASTER CANNOT SWITCH IOS,STATUS=    9000
NOV 13 1035:50 MASTER CANNOT SWITCH IOS,STATUS=    9000
NOV 13 1035:52 MASTER CANNOT SWITCH IOS,STATUS=    9000
NOV 13 1035:54 MASTER CANNOT SWITCH IOS,STATUS=    9000
NOV 13 1035:56 MASTER CANNOT SWITCH IOS,STATUS=    9000
NOV 13 1035:58 MASTER CANNOT SWITCH IOS,STATUS=    9000
NOV 13 1036:00 MASTER CANNOT SWITCH IOS,STATUS=    9000
NOV 13 1036:02 MASTER CANNOT SWITCH IOS,STATUS=    9000
NOV 13 1036:04 MASTER CANNOT SWITCH IOS,STATUS=    9000
```

NOV 13 1984
1037:30

TREND SET 1

A

TIMEBASE 2 SECONDS

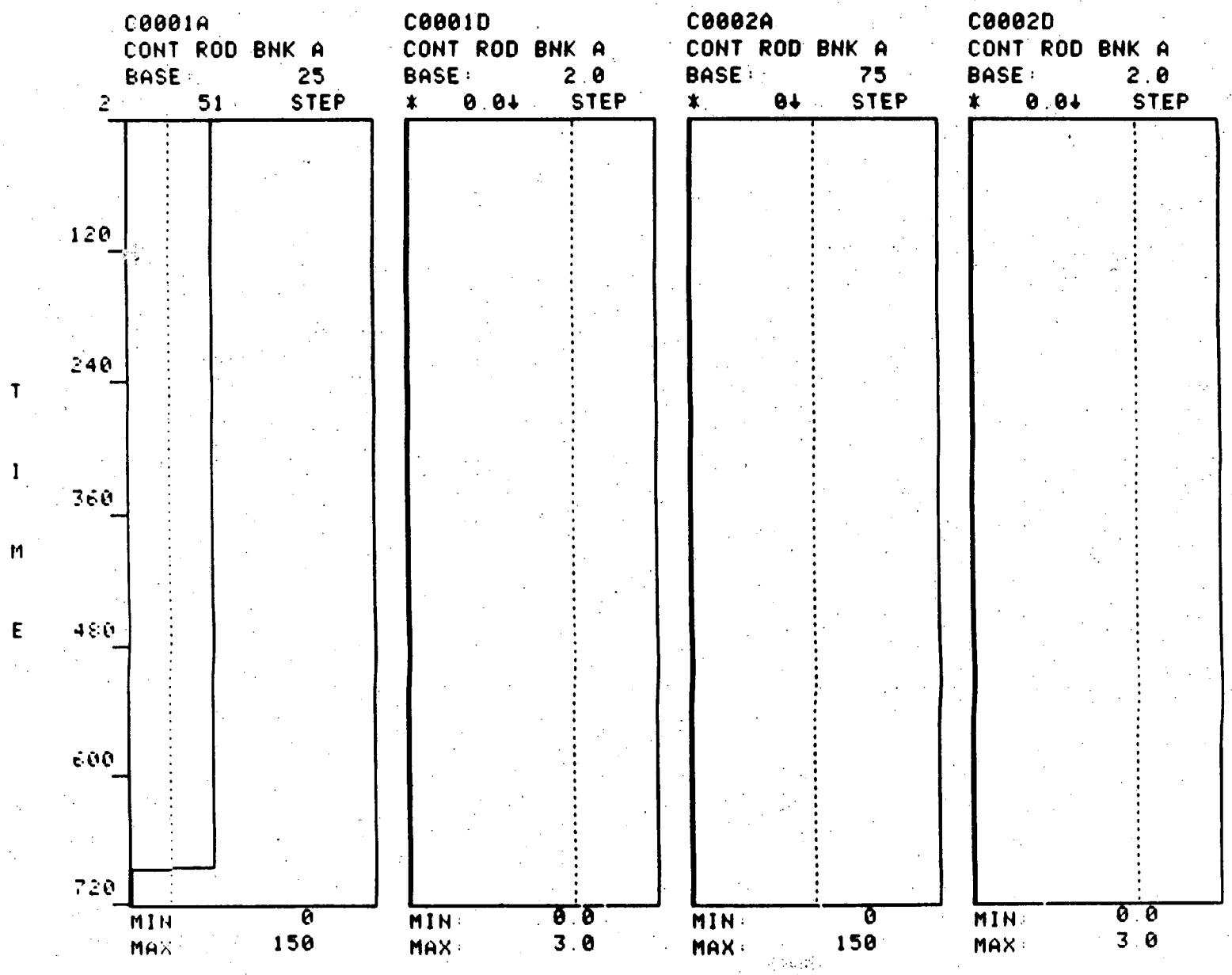

HI RES BACKUP REQ'D

BAD DATA

NOV 13 1984
1037 50

TREND SET 2

A

TIMEBASE 2 SECONDS

C0003A	C0003D	C0004A	C0004D
CONT ROD BNK A	CONT ROD BNK B	CONT ROD BNK A	CONT ROD BNK B
BASE: 75	BASE: 5.0	BASE: 5	BASE: 2300.0
2 * 30↓ STEP	* 0.0↓ STEP	* 0↓ STEP	*1900.0↓ STEP
MIN 30	MIN 0.0	MIN 0	MIN 1900.0
MAX 135	MAX 10.0	MAX 10	MAX 2700.0

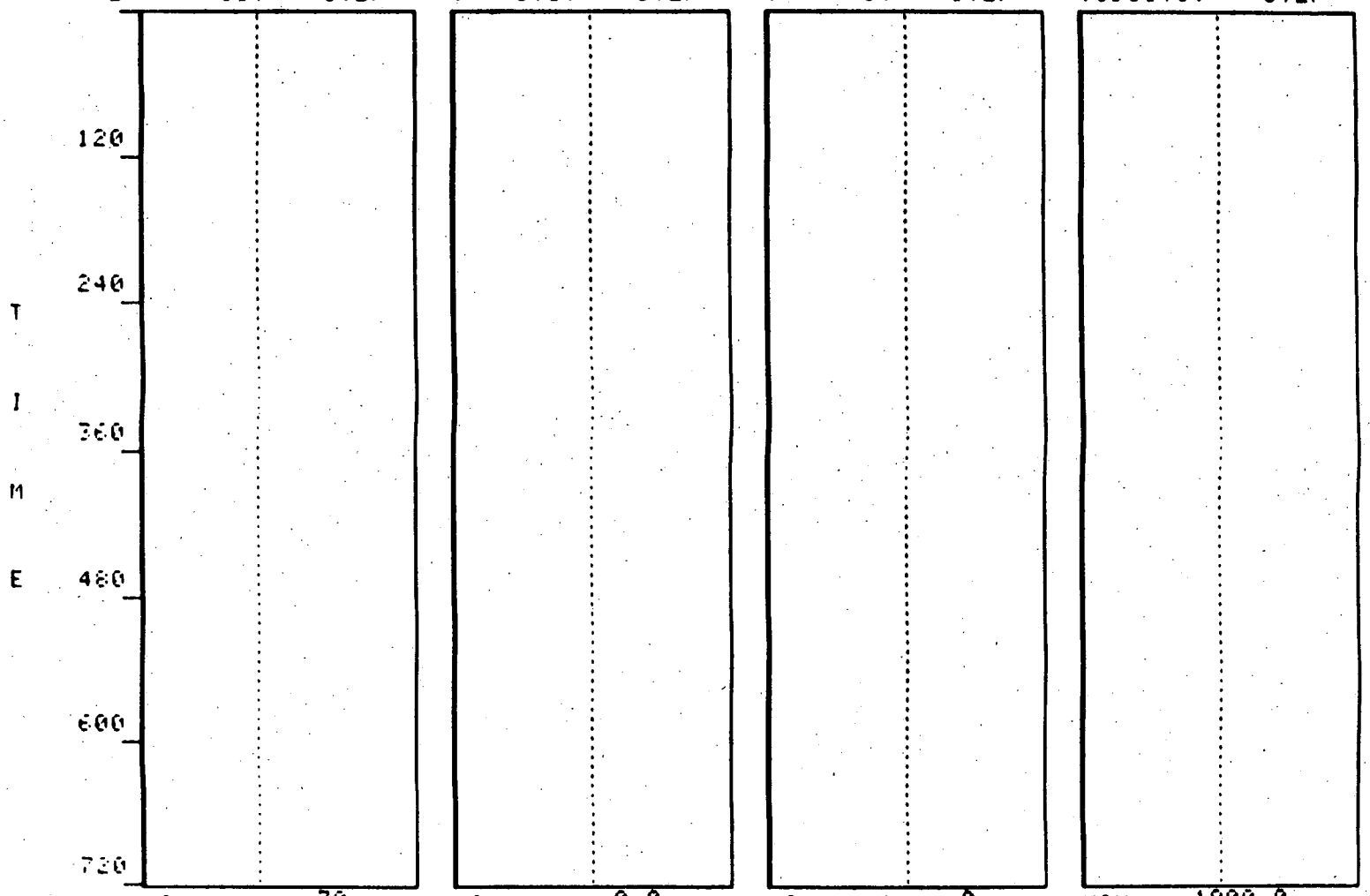

HI RES BACKUP REQ'D

BAD DATA

FIGURE 11

CFMS DIALOGUE HIERARCHY

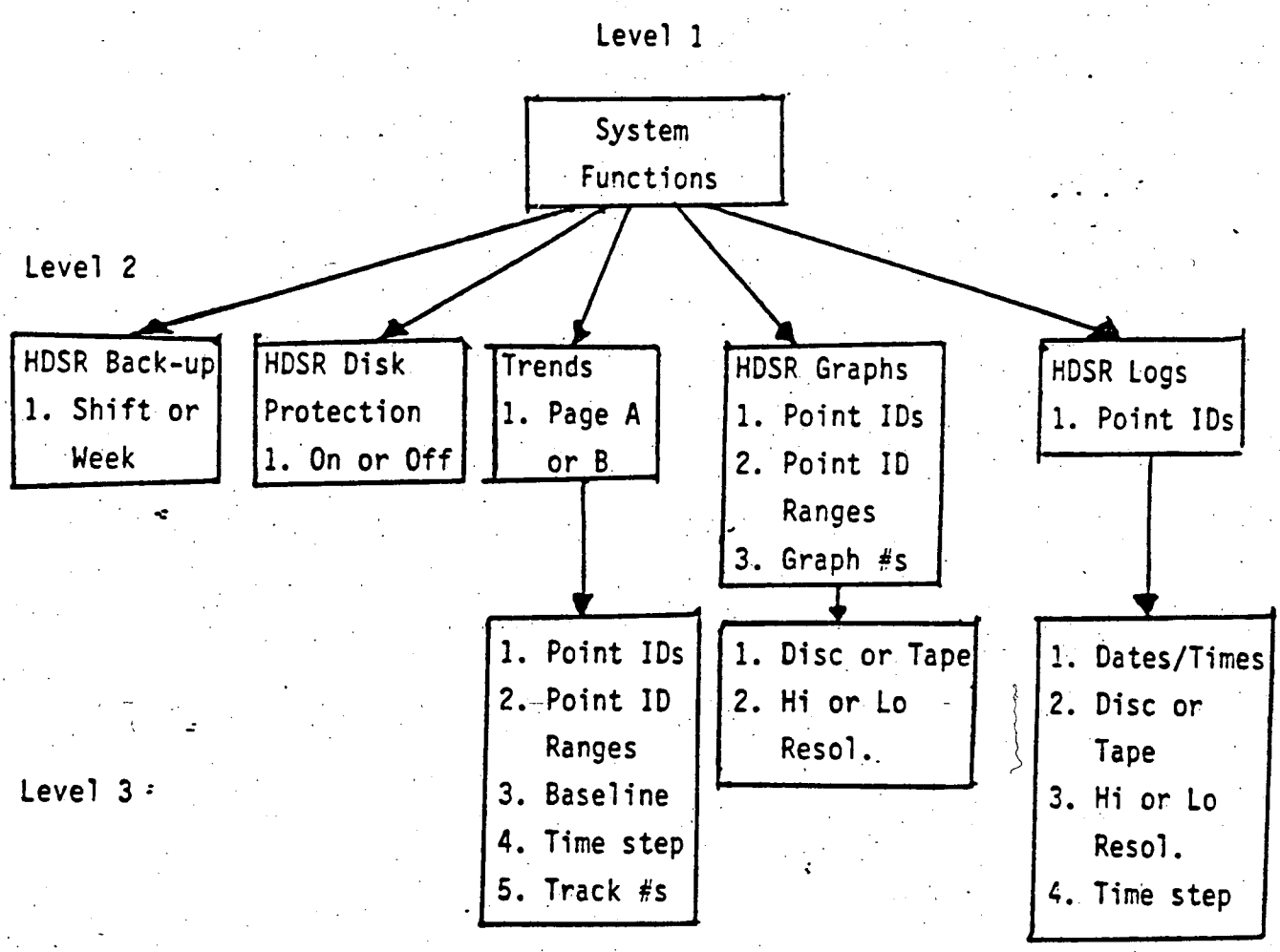

FIGURE 12 PAGE CONTROL MODULE

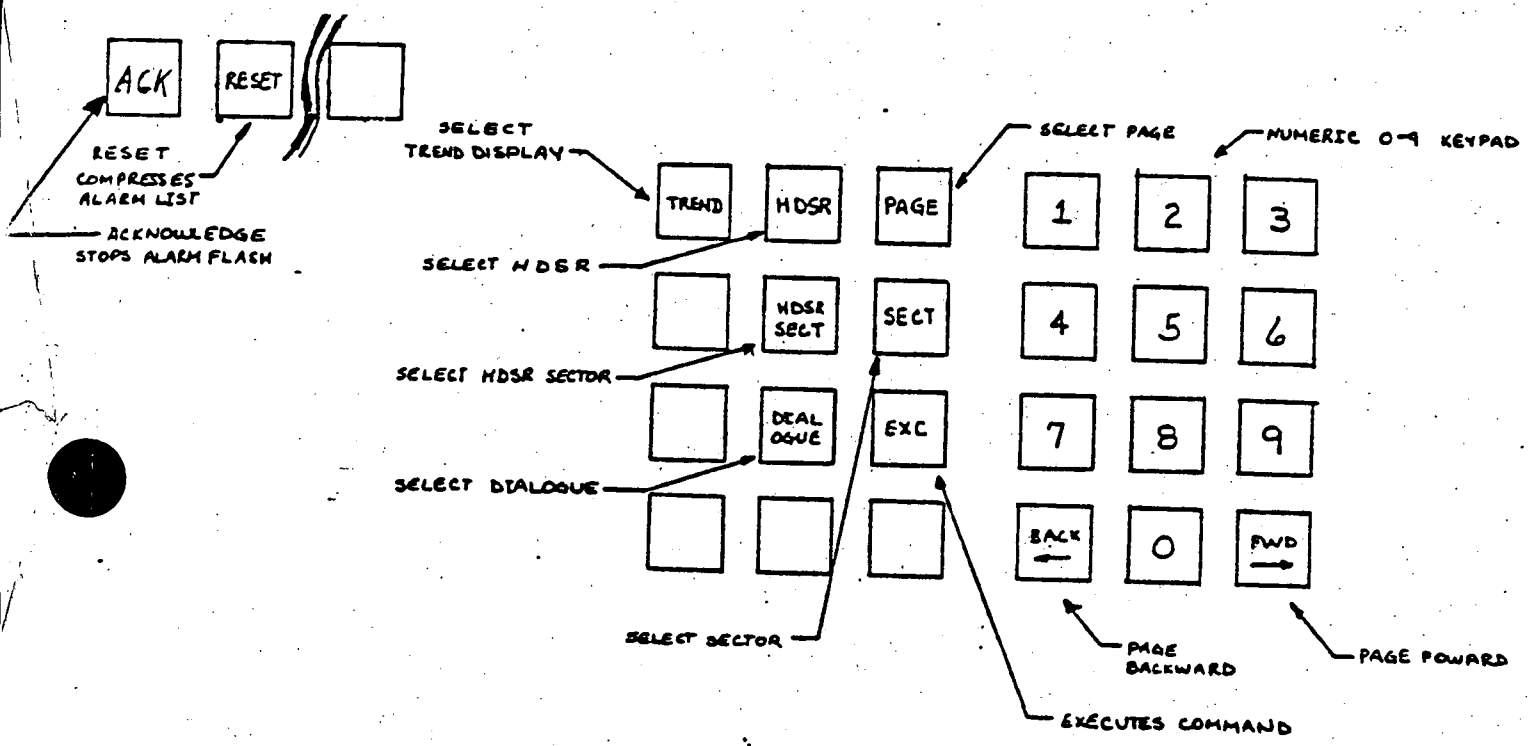

KEY SEQUENCES: PAGE #### EXC
SECT # EXC
FWD
BACK