FPDC

Docket # 50-286
Control # 8407020425
Date 6/25/84 Document:
REGULATORY DOCKET FILE

— NOTICE —

THE ATTACHED FILES ARE OFFICIAL RECORDS OF THE DIVISION OF DOCUMENT CONTROL. THEY HAVE BEEN CHARGED TO YOU FOR A LIMITED TIME PERIOD AND MUST BE RETURNED TO THE RECORDS FACILITY BRANCH 016. PLEASE DO NOT SEND DOCUMENTS CHARGED OUT THROUGH THE MAIL. REMOVAL OF ANY PAGE(S) FROM DOCUMENT FOR REPRODUCTION MUST BE REFERRED TO FILE PERSONNEL.

DEADLINE RETURN DATE _____

_____ _____

_____ _____

_____ _____

RECORDS FACILITY BRANCH

New York Power Authority Contract No. 80-121

Final Report, May 4, 1984
Revision 0, May 4, 1984

Report Number 83-76

SUMMARY OF THE TEARING STABILITY ANALYSIS OF THE INDIAN POINT 3 PRIMARY COOLANT SYSTEM

Prepared by

FRACTURE PROOF DESIGN CORPORATION
77 Maryland Plaza
St. Louis, MO 63108

Principal Investigators

K. H. Cotter
Paul C. Paris

Prepared for

New York Power Authority
123 Main Street
White Plains, NY 10601

New York Power Authority Project Manager

James V. Brunetti
Civil-Structural Department, Design and Analysis

8407020466 840625
PDR ADOCK 05000286
P PDR

(NON-PROPRIETARY)

TABLE OF CONTENTS

		Page
1-0	INTRODUCTION	1-1
2-0	STRUCTURAL DUCTILITY CONCEPTS	2-1
2-1	STORED ELASTIC ENERGY	2-1
2-2	STRUCTURAL DUCTILITY	2-1
3-0	RESULTS	3-1
3-2	HOT LEG RESULTS	3-1
3-3	COLD LEG RESULTS	3-2
3-4	CROSS LEG RESULTS	3-2
4-0	CONCLUSIONS	4-1
5-0	REFERENCES	5-1

Section 1

INTRODUCTION

Beginning in July, 1980, Fracture Proof Design Corporation (FPDC) began an analysis of the New York Power Authority's (NYPA) Indian Point 3 Nuclear Power Plant for purposes of demonstrating that no asymmetric loads were applied to the reactor pressure vessel (RPV) during a postulated LOCA accident. The approach taken by FPDC was to demonstrate that even if i) upper-bound loads, that is, loads that are larger than Level D or design loads, and ii), large cracks, ranging from 60 to greater than 180° of circumferential length, were present in the reactor coolant system (RCS) piping, no instability of the cracks would occur. The conclusion of such a postulate is that no instantaneous guillotine type break could occur even under the foregoing postulated severe conditions. Thus, if no guillotine break occurs, no large LOCA loads would be present, and thus, the Indian Point 3 asymmetric load problem has been resolved.

In the summer of 1981, FPDC transmitted the results of the analysis of the Indian Point 3 RCS (1) to the USNRC. This was followed by a briefing given to the Commission's Staff in September, 1981. At the time of the briefing, the Commission indicated, verbally, that it was in agreement with the approach taken to demonstrate that no large LOCA loads could exist. But, it requested further evaluation of material properties. Thus, FPDC undertook a testing program to develop tearing

resistance data for the primary piping materials and welds, on behalf of NYPA. The test program included J-resistance curves and computation of the material tearing modulus for the wrought and cast materials and welds thereof that are in the RCS. The test program was completed in the summer of 1983 and the results (2) were forwarded to the USNRC for review.

During the period between the original submittal of the analysis of the RCS (1) and the present time, a number of criteria have been drafted for purposes of postulating pipe-breaks in nuclear piping using fracture mechanics methods. This activity culminated with the USNRC publishing a draft criteria (3) in November, 1983. Between 1981 and the present, developments in analysis methodology and concepts were being made. These included the work of Paris and Cotter (4) on the concept of structural ductility.

It is the intent of this summary document to re-evaluate the results of the original analysis (1) by incorporating the material resistance data developed in the test program (2), to compare the analysis with the proposed NRC criteria (3), and finally, to demonstrate the applicability of the new structural ductility (4) concepts.

Section 2

STRUCTURAL DUCTILITY CONCEPTS

The fundamental concepts involved in structural ductility arguments were presented by Paris and Cotter (4) and Paris (5) and are reviewed in this section to acquaint the unfamiliar reader.

2-1 STORED ELASTIC ENERGY

Earlier arguments by Nathan Newmark showed that to insure suffcient structural ductility, it was necessary to show that a structure could absorb (up to) twice its stored elastic energy by a plastic energy dissipation mechanism. Paris and Cotter (4) applied this concept to problems involving the integrity of nuclear piping and related the Newmark requirement to the tearing modulus (6) approach.

* * * * PROPRIETARY DATA OMITTED * * * *

2-2 STRUCTURAL DUCTILITY

The foregoing section, describing the absorption of stored elastic energy is only one of two portions of the structural ductility arguments presented by Paris and Cotter (4). Following their arguments, it is

noted that the requirement of Equation 2-7 is based on a global energy dissipation requirement. The portion remaining is that of a local requirement. In structural analyses involving nuclear piping systems, the local requirement is met by determining the value of the applied J-integral, at the crack section, due to local loading conditions. The value for J_{app} is readily computed using one or more methods. For the purpose of this analysis, the JTPIPE computer program (8) was used. By so doing, it is found that the total J at the crack section is equal to

* * * * PROPRIETARY DATA OMITTED * * * *

if structural ductility requirements are to be met. An additional requirement is that, to insure crack stability, the value of the applied tearing modulus, T_{app}, must satisfy

$$\eta T_{app} < T_{mat} \tag{2-9}$$

where T_{app} is computed by use of JTPIPE or by similar schemes, T_{mat} is the value of the material tearing modulus, corresponding to the value of J_{app} given in Equation 2-7 and η is the Newmark factor,

* * * * PROPRIETARY DATA OMITTED * * * *

Thus, the second requirement to insure structural ductility is satisfaction of Equation 2-9, which is simultaneously subject to the J_{app} being computed in accordance with Equation 2-7. In other words, the J_{app} and T_{app}, as developed in Equation 2-8 and 2-9, must be adequately within the stable region of a J-T stability diagram.

Section 3

RESULTS

It was necessary to re-analyze the Indian Point 3 RCS because of the development of the new material property data (2), the development of new bounding loads as described below, and the development of structural ductility concepts (4).

3-1 ANALYSIS APPROACH

This sub-section describes the analytical methods used for analyzing the RCS.

* * * * PROPRIETARY DATA OMITTED * * * *

3-2 HOT LEG RESULTS

An isometric view of the RCS is shown in Figure 3-3a, the hot leg of the RCS connects the RPV to the steam generator (SG). This is shown in elevation view in Figures 3-3b (OMITTED AS PROPRIETARY) and 3-3c, based on measurements taken at the Indian Point 3 site (11),

* * * * PROPRIETARY DATA OMITTED * * * *

The total value of J_{app} is represented by the horizontal bar at the limit

of the vertical line as shown in Figures 3-5 thru 3-7. Using this approach, and material data based on deformation theory J, J_d, stability of the hot leg was proven unconditionally.

3-3 COLD LEG RESULTS

The plan view of the RCS is shown in Figure 3-8.

* * * * PROPRIETARY DATA OMITTED * * * *

Stability of the cold leg was demonstrated based on tearing stability and structural ductility as shown in Figures (OMITTED AS PROPRIETARY).

3-4 CROSS LEG RESULTS

The cross leg is shown in Figure 3-16a and its idealization in

* * * * PROPRIETARY DATA OMITTED * * * *

The results, using deformation theory J for the material resistance, are shown in Figures 3-17 through 3-19. Again, these represent results for 60, 120, and 180 degrees, respectively. Stability is again indicated even with these unduly conservative assumptions on loading.

+ + + + NOTE: ALL PROPRIETARY FIGURES ARE OMITTED + + + +

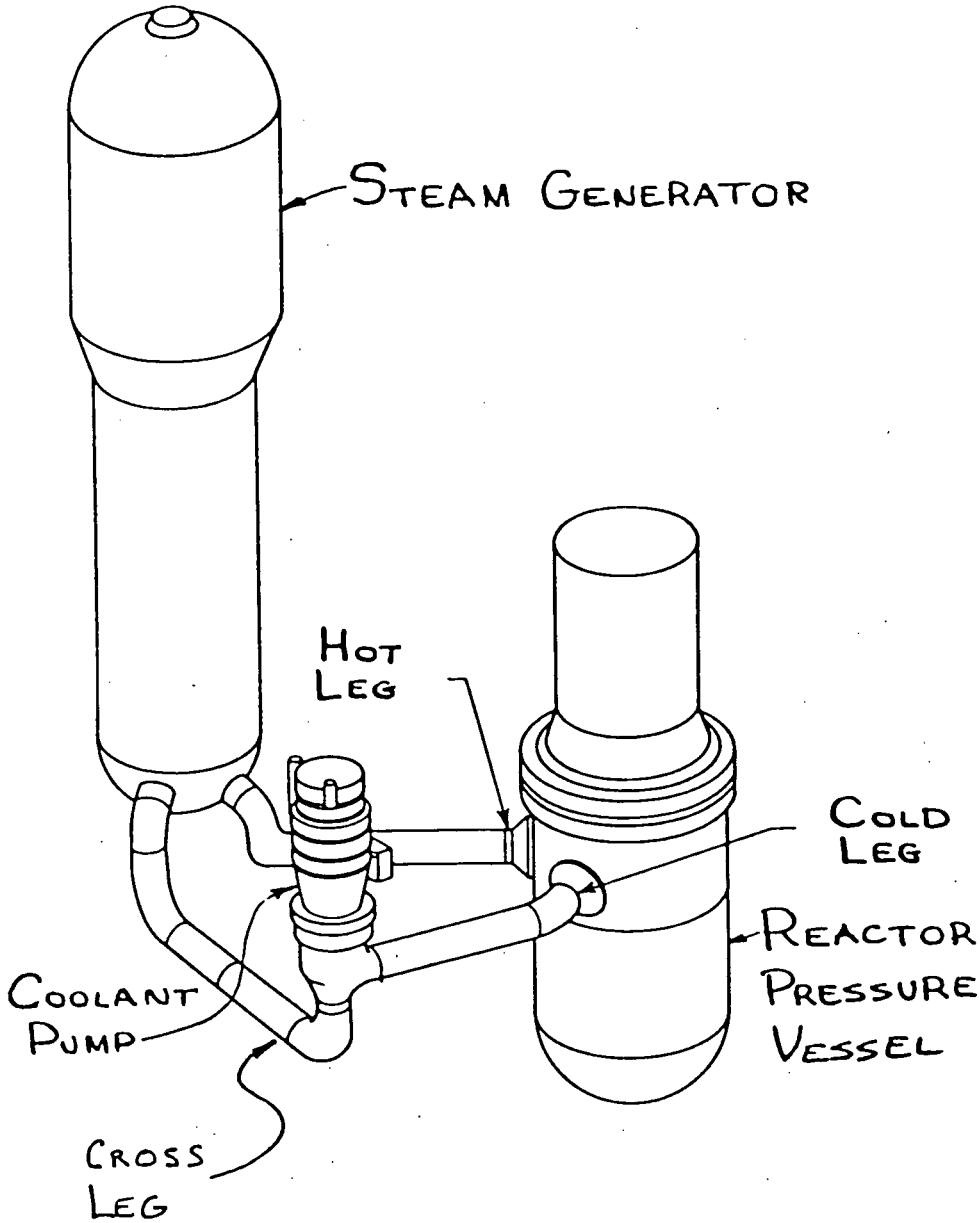

Figure 3-3a Isometric View of Indian Point 3 RCS

THIS PAGE IS
NON-PROPRIETARY

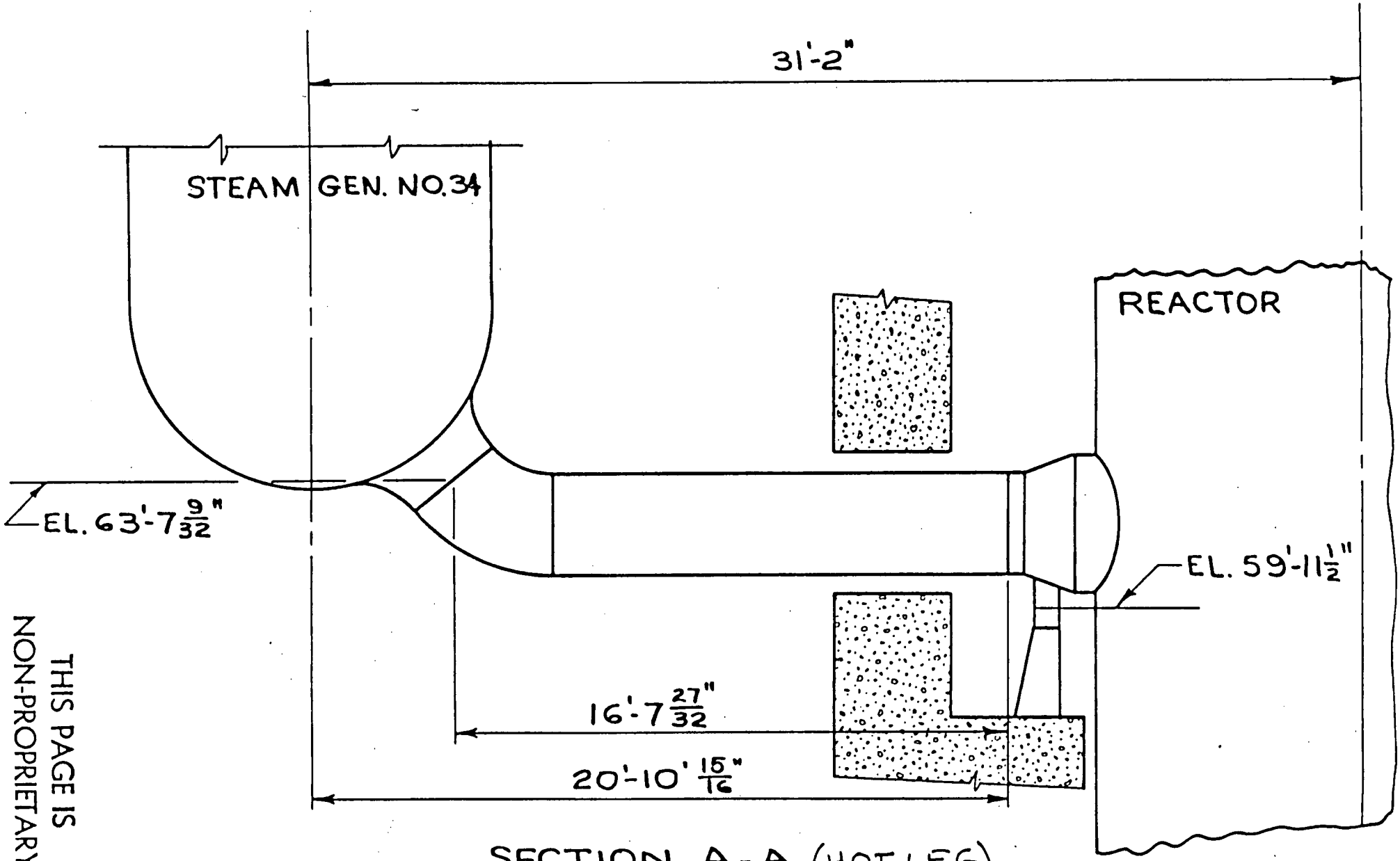

SECTION A-A (HOT LEG)
FROM DWG NO 202101

Figure 3-3c

THIS PAGE IS NON-PROPRIETARY

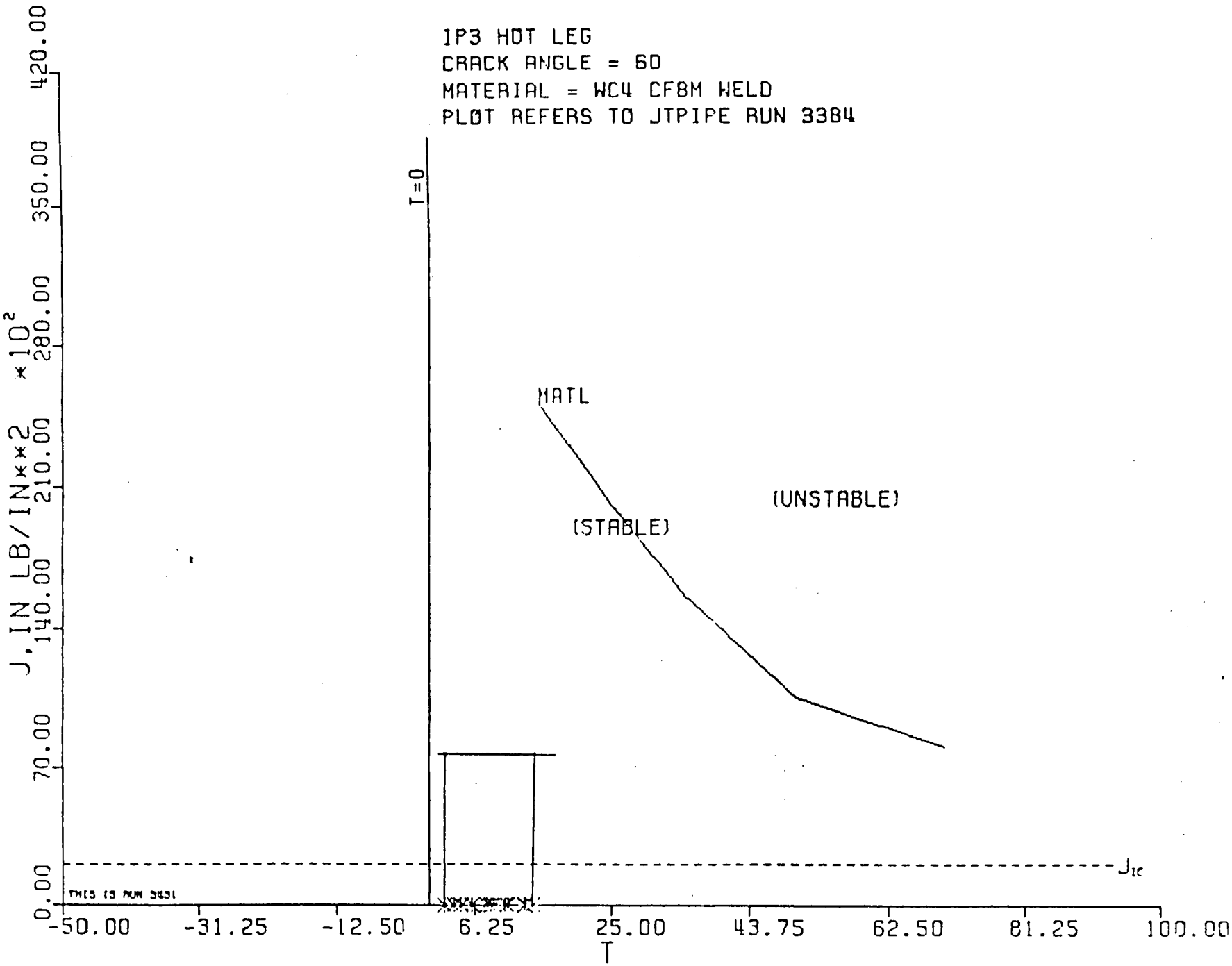

Figure 3-5 Hot Leg J-T Stability Diagram, $2\theta = 60^\circ$, J_d

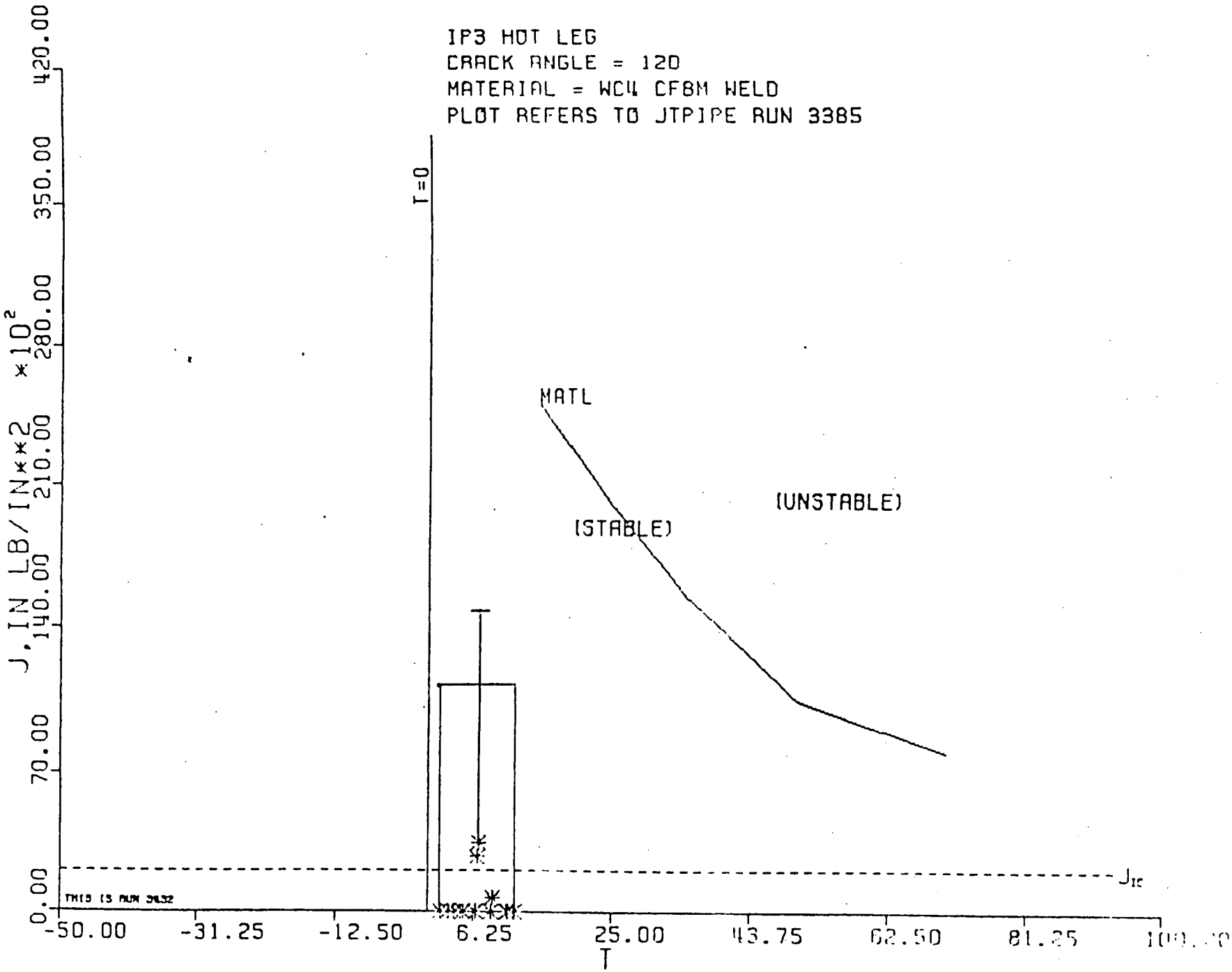

Figure 3-6 Hot Leg J-T Stability Diagram, $2\theta = 120°$, J_d

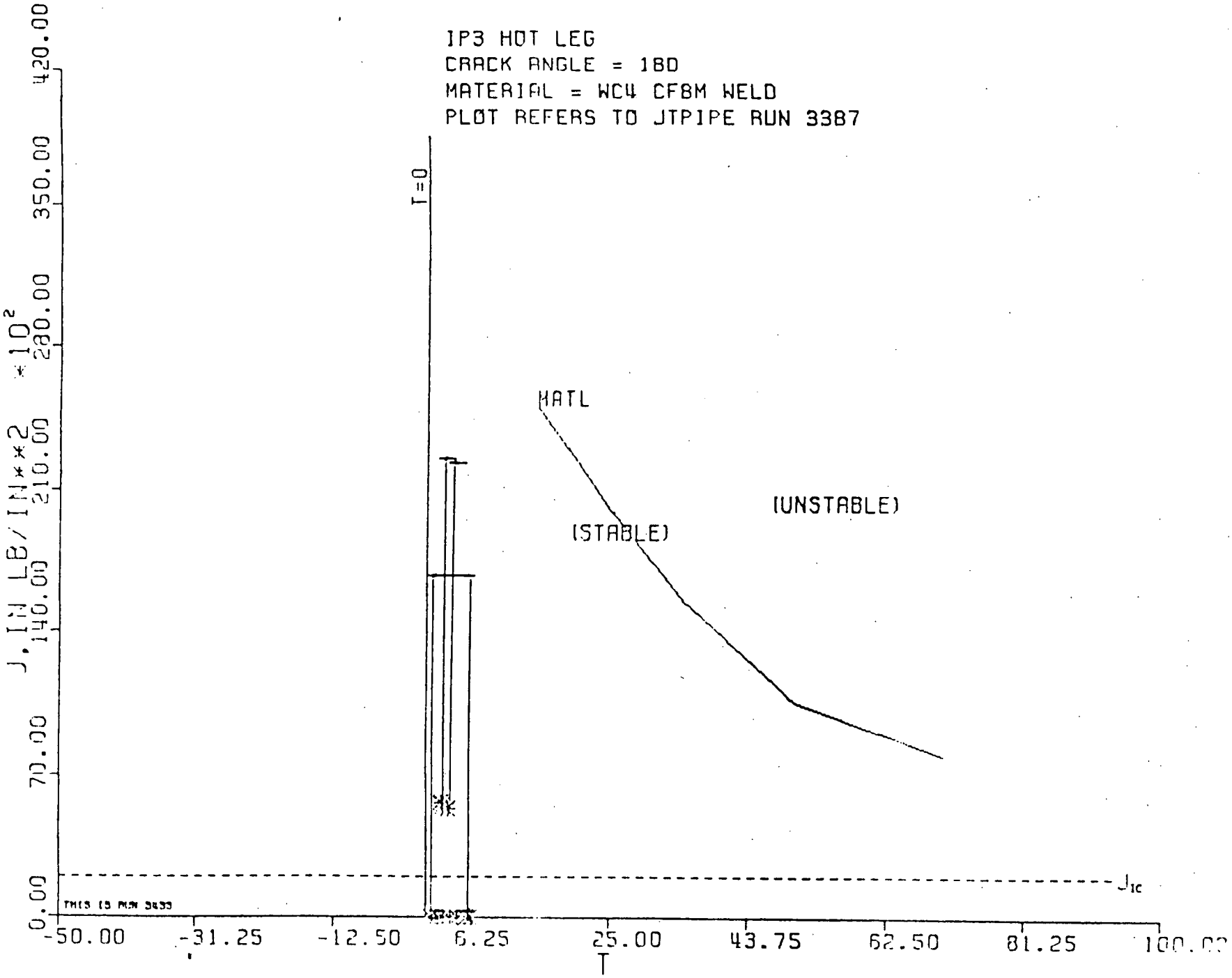

Figure 3-7 Hot Leg J-T Stability Diagram, $2\theta = 180°$, J_d

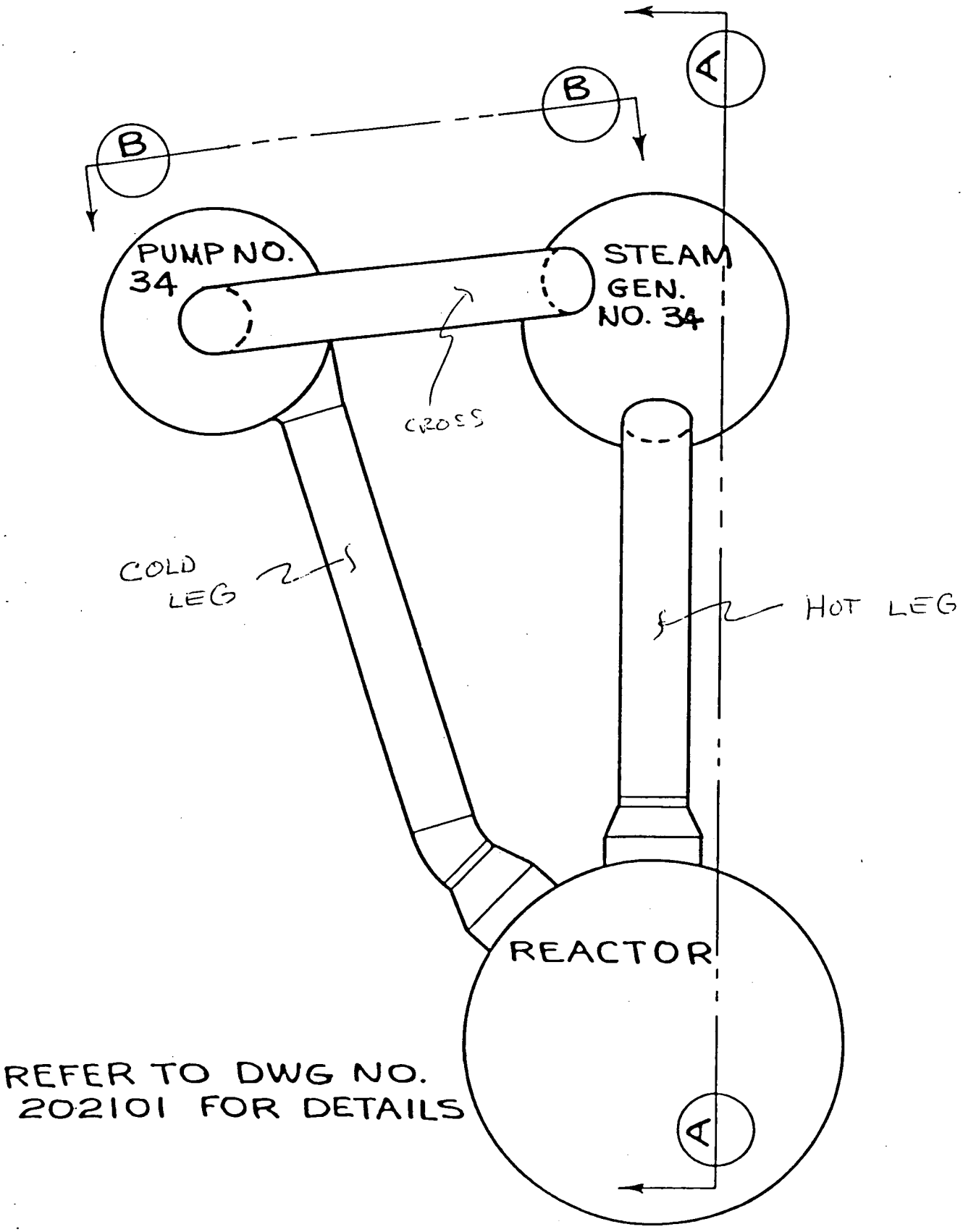

Figure 3-8 Bottom View Primary Coolant System

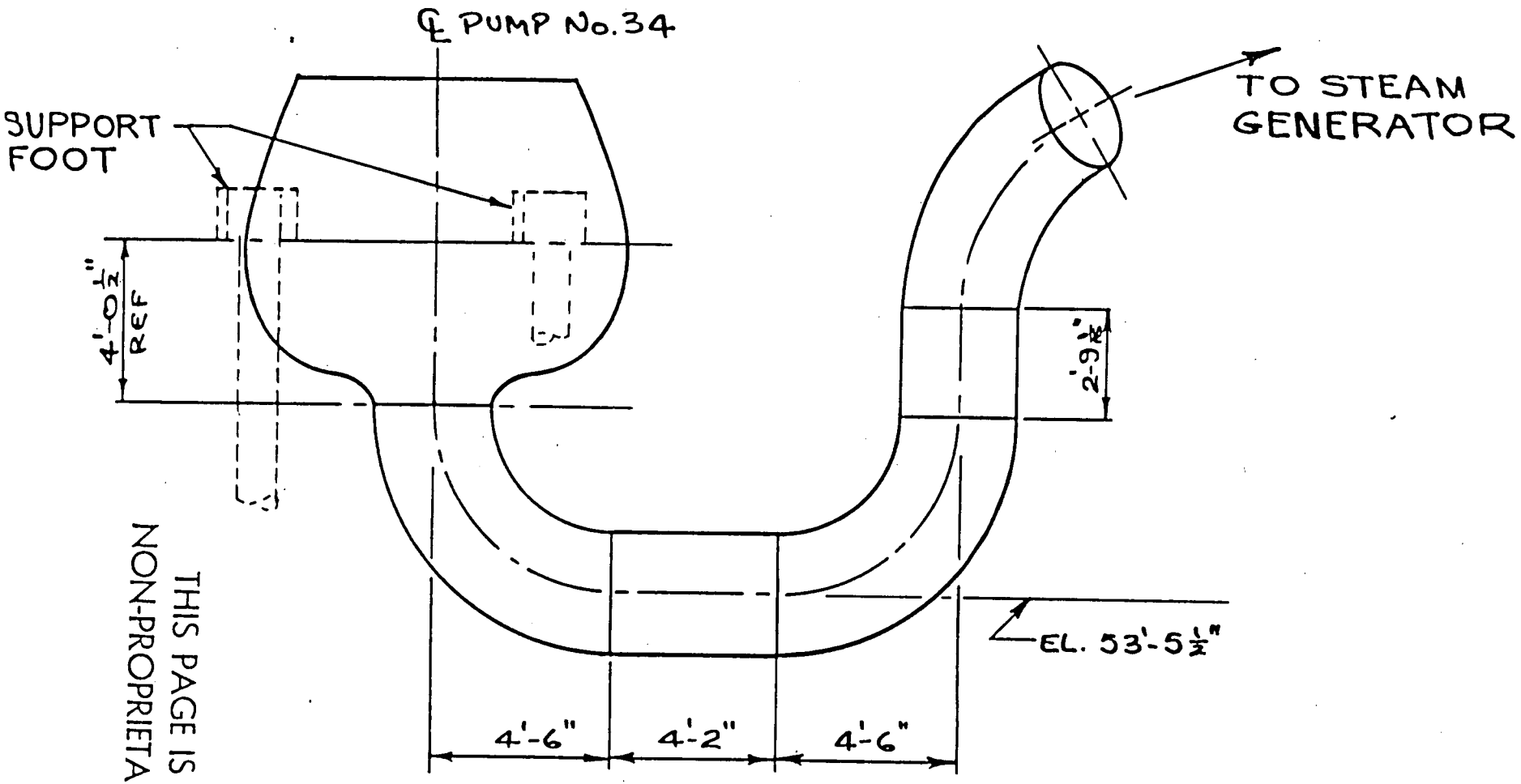

SECTION B-B (CROSS LEG)
FROM DWG NO 202101

Figure 3-16a

THIS PAGE IS NON-PROPRIETARY

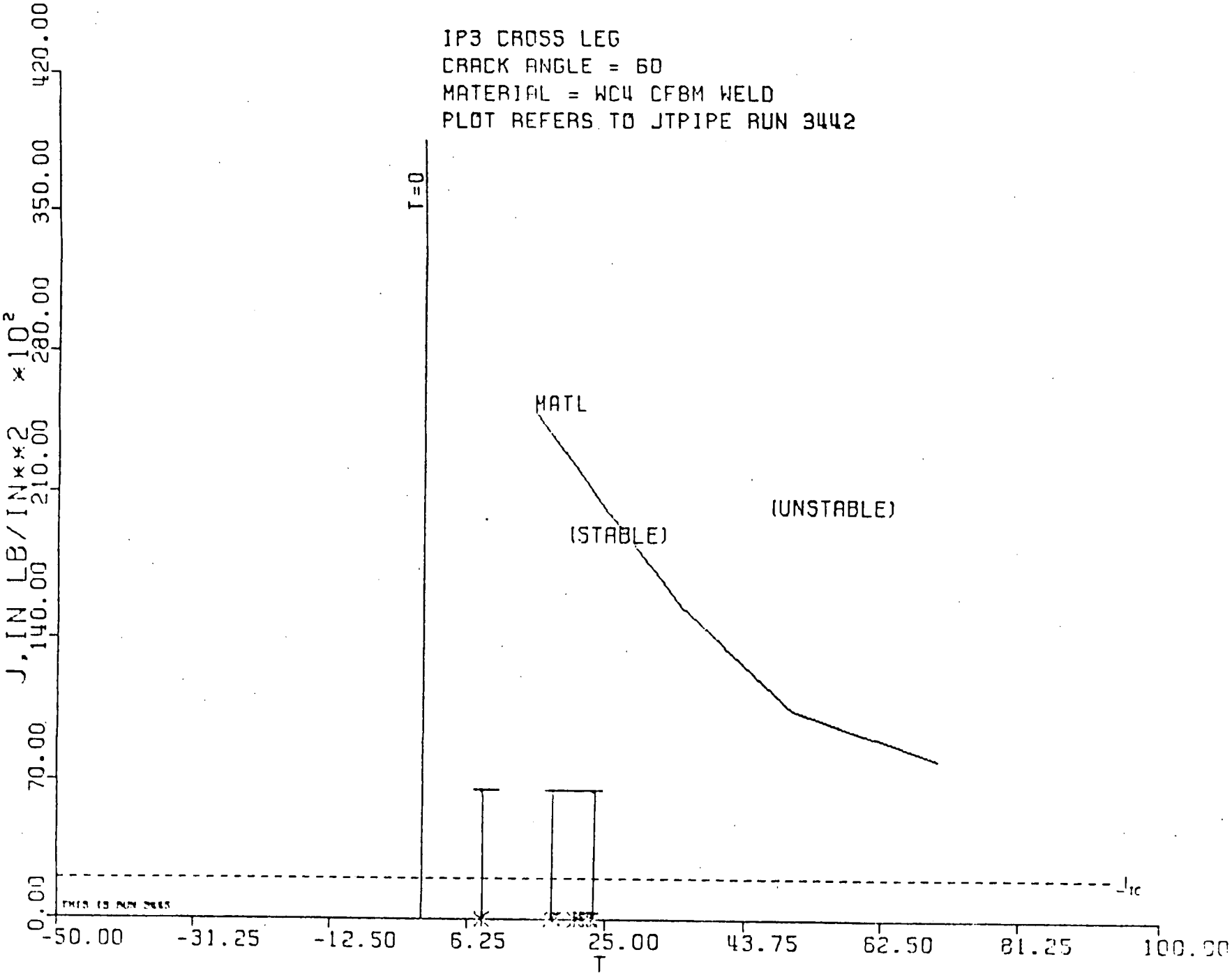

Figure 3-17 Cross Leg J-T Stability Diagram, $2\theta = 60^{\circ}$, J_d

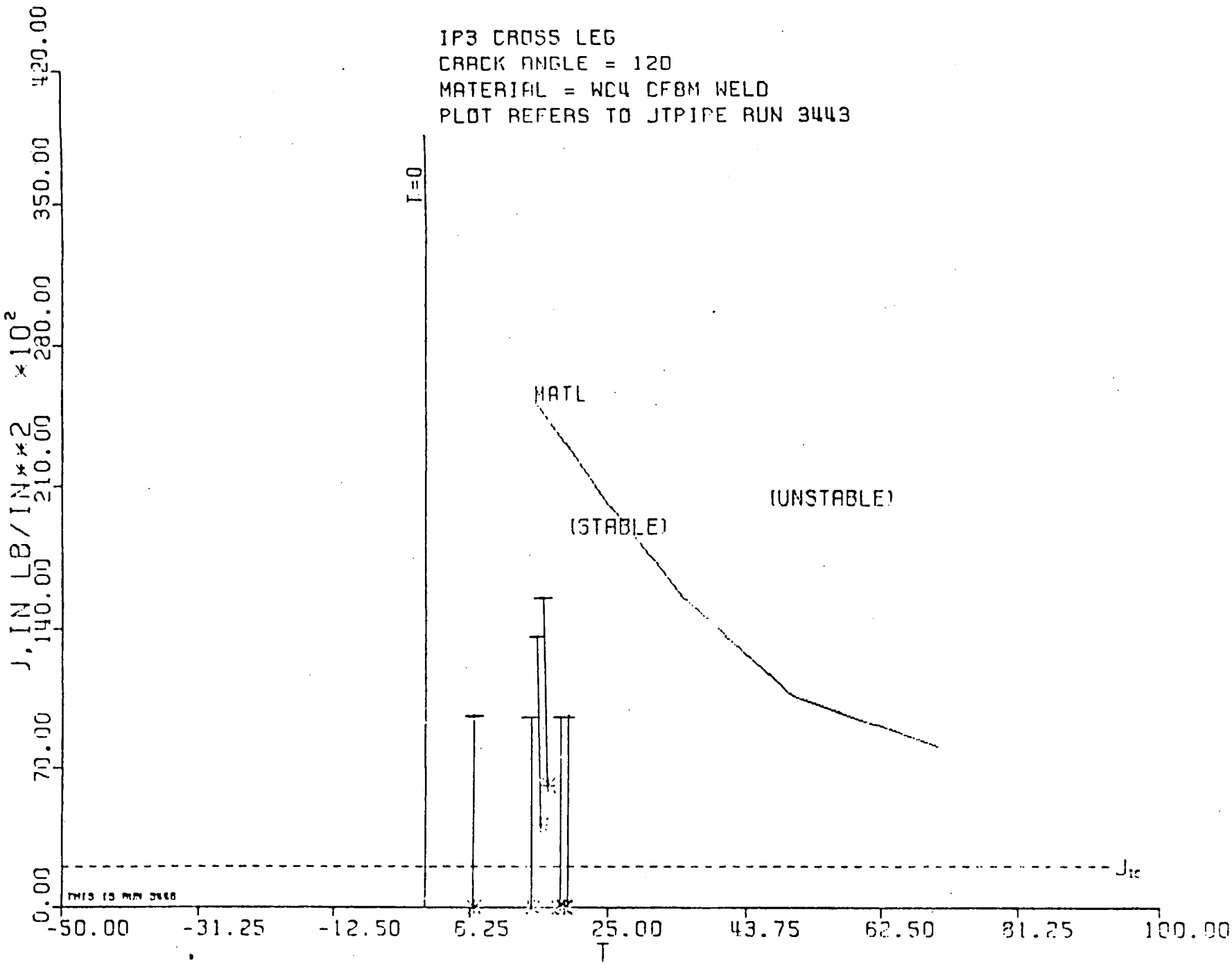

Figure 3-18 Cross Leg J-T Stability Diagram, $2\theta = 120^\circ$, J_d

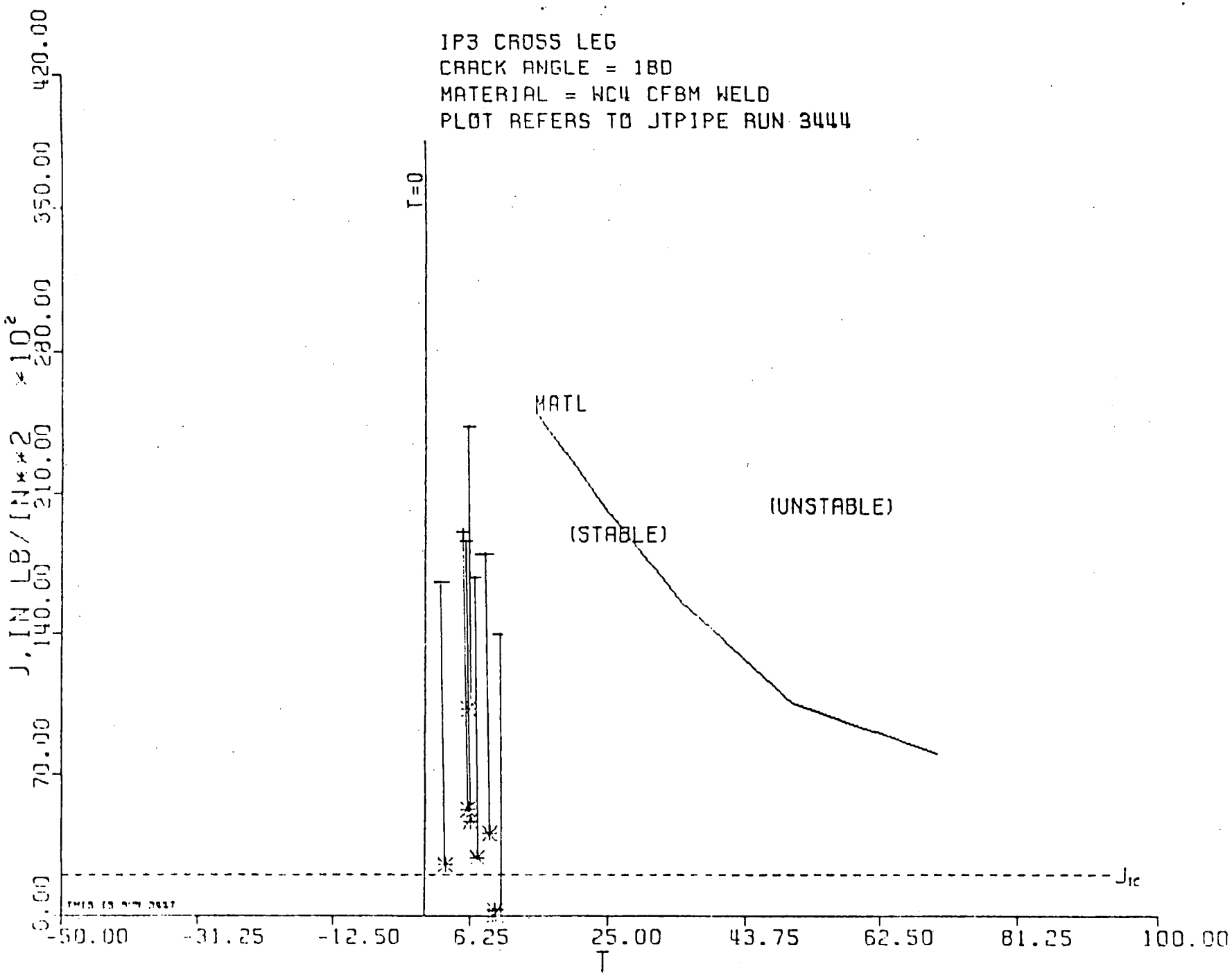

Figure 3-19 Cross Leg J-T Stability Diagram, $2\theta = 180^\circ$, J_d

Section 4

CONCLUSIONS

As a result of performing a tearing stability analysis of and developing material property data for the Indian Point Unit 3 Nuclear Plant, a number of conclusions were reached. These conclusions demonstrated that no asymmetric vessel loads can be expected.

The basic tearing stability criteria (6), $T_{app} < T_{mat}$, was satisfied unconditionally, for the case of large circumferential cracks under upper-bound loading conditions throughout the reactor coolant system. It was demonstrated that under these conditions that no crack instabilities would occur for the RCS hot leg, cross leg, or cold leg.

Further, the additional stability criteria, as defined by the structural ductility concepts (4), $\eta T_{app} < T_{mat}$ was proven.

The use of the structural ductility approach was shown to be an effective bound to any errors that might occur in a level D or design stress or loads analysis.

The above considerations were shown to be satisfied using lower bound material properties developed for the Indian Point 3 RCS. It was noted that these material properties varied considerably by product form and whether the crack was located in base or weld metal. It was found

that the material tearing resistance (or toughness) of stainless steel piping is an important factor and must be included in any safety analysis.

The USNRC proposed criteria for alleviation of pipe break postulation (3) was satisfied by this analysis; plus, additional conservatisms were included in the form of structural ductility requirements.

Because no break can occur in the RCS based on the above conclusions, it follows that no large LOCA can be expected. Thus, no asymmetric vessel loads will occur and, accordingly, no vessel supports are required.

This analysis has met current USNRC criteria (pending) and the material data, previouly requested by the USNRC, has been provided. Therefore, it is requested that the requirement to install asymmetric load supports be eliminated.

Section 5

REFERENCES

1. "Tearing Stability Analysis of the Reactor Coolant System Indian Point 3 Nuclear Power Plant," Fracture Proof Design Corporation Report, May 28, 1981. (PROPRIETARY)

2. "Development of Material Property Data for the Tearing Stability Analysis of the Indian Point 3 Primary Coolant System," FPDC Report 83-104, Rev. 1, September 28, 1983, K. H. Cotter, Paul C. Paris and F. Baradari (PROPRIETARY)

3. "Step-Wise Approach, Leak-Before-Break (LBB) Analysis," Draft USNRC Criteria Dated 11/29/83, prepared by the USNRC Piping Review Committee Staff.

4. "A Critical Review of Methods of Alleviating the Requirement to Postulate Guillotine Type Breaks," Paul C. Paris and Keyren H. Cotter, presented at the CSNI Specialist's Meeting on Leak-Before-Break, September 1 and 2, 1983, Monterey, CA.

5. "Structural Ductility Concepts," Paul C. Paris, FPDC Report 83-76, Rev. 1, May 6, 1983. (PROPRIETARY)

6. "A Treatment of the Subject of Tearing Stability," P. C. Paris, et al., USNRC Report NUREG-0311, August, 1977.

7. "Stability Analysis of Circumferential Cracks in Reactor Piping Systems," H. Tada, P. Paris and R. Gamble, USNRC Report NUREG/CR-0838, February, 1979.

8. "JTPIPE, A Finite Element Program for Computing the Integrity of Cracked Piping Using Tearing Stability Methodology," FPDC, St. Louis, MO, Ver. 2,Lev 3 (PROPRIETARY).

9. ASME Boiler and Pressure Vessel Code, Section III, Appendix I, 1983.

10. "Material Resistance and Instability Beyond J-Controlled Growth," H. A. Ernst in Elastic-Plastic Fracture: Second Symposium, ASTM STP 803, C. F. Shih and J. P Gudas, Eds., ASTM, 1983.

11. Indian Point 3 Site Visit Report, K. H. Cotter, FPDC Report 83-77, Sept. 23, 1983.