PMSTPCOL PEmails

From: Elton, Loree [leelton@STPEGS.COM]
Sent: Monday, December 07, 2009 3:01 PM
To: Muniz, Adrian; Dyer, Linda; Wunder, George; Tonacci, Mark; Eudy, Michael; Plisco, Loren; Anand, Raj; Foster, Rocky; Joseph, Stacy; Govan, Tekia; Tai, Tom
Subject: RE: Transmittal of U7-C-STP-NRC-090207
Attachments: U7-C-STP-NRC-090207.pdf

Oops. It helps to attach the letter.

From: Elton, Loree
Sent: Monday, December 07, 2009 1:59 PM
To: 'Adrian Muniz'; Dyer, Linda; 'George Wunder (gfw@nrc.gov)'; 'Mark Tonacci'; 'Michael Eudy'; 'Plisco, Loren'; 'Raj Anand'; 'Rocky Foster'; 'Stacy Joseph'; 'Tekia Govan'; 'Tom Tai'
Subject: Transmittal of U7-C-STP-NRC-090207

Please find attached a courtesy copy of letter number U7-C-STP-NRC-090207, which contains responses to Request for Additional Information (RAI) letter number 285 related to Combined License Application (COLA) Part 2, Tier 2, Chapter 15.

The official version of this correspondence was signed today and will be placed in today's mail. Please call me if you have any questions concerning this letter.

Thank you,

Loree Elton

Licensing, STP 3 & 4
leelton@stpegs.com
361-972-4644

Hearing Identifier: SouthTexas34Public_EX
Email Number: 1923

Mail Envelope Properties (C7F098E3C31A0141A02043F0B8E656EE25648BDD73)

Subject: RE: Transmittal of U7-C-STP-NRC-090207
Sent Date: 12/7/2009 3:00:56 PM
Received Date: 12/7/2009 3:01:04 PM
From: Elton, Loree

Created By: leelton@STPEGS.COM

Recipients:
"Muniz, Adrian" <Adrian.Muniz@nrc.gov>
Tracking Status: None
"Dyer, Linda" <lcdyer@STPEGS.COM>
Tracking Status: None
"Wunder, George" <George.Wunder@nrc.gov>
Tracking Status: None
"Tonacci, Mark" <Mark.Tonacci@nrc.gov>
Tracking Status: None
"Eudy, Michael" <Michael.Eudy@nrc.gov>
Tracking Status: None
"Plisco, Loren" <Loren.Plisco@nrc.gov>
Tracking Status: None
"Anand, Raj" <Raj.Anand@nrc.gov>
Tracking Status: None
"Foster, Rocky" <Rocky.Foster@nrc.gov>
Tracking Status: None
"Joseph, Stacy" <Stacy.Joseph@nrc.gov>
Tracking Status: None
"Govan, Tekia" <Tekia.Govan@nrc.gov>
Tracking Status: None
"Tai, Tom" <Tom.Tai@nrc.gov>
Tracking Status: None

Post Office: exgmb1.CORP.STPEGS.NET

Files	**Size**	**Date & Time**
MESSAGE	910	12/7/2009 3:01:04 PM
U7-C-STP-NRC-090207.pdf	353901	

Options
Priority: Standard
Return Notification: No
Reply Requested: No
Sensitivity: Normal
Expiration Date:
Recipients Received:

Nuclear Operating Company
South Texas Project Electric Generating Station P.O. Box 289 Wadsworth, Texas 77483

December 7, 2009
U7-C-STP-NRC-090207

U. S. Nuclear Regulatory Commission
Attention: Document Control Desk
One White Flint North
11555 Rockville Pike
Rockville, MD 20852-2738

South Texas Project
Units 3 and 4
Docket Nos. 52-012 and 52-013
Response to Request for Additional Information

Attached is a response to an NRC staff question included in Request for Additional Information (RAI) letter number 285 related to Combined License Application (COLA) Part 2, Tier 2, Chapter 15.

The attachment addresses the response to the RAI question listed below:

RAI 15.08-2

The COLA changes provided in this response will be incorporated in the next routine revision of the COLA following NRC acceptance of the RAI response.

There are no commitments in this letter.

If you have any questions regarding this response, please contact me at (361) 972-7136, or Bill Mookhoek at (361) 972-7274.

I declare under penalty of perjury that the foregoing is true and correct.

Executed on 12/7/09

Scott Head
Manager, Regulatory Affairs
South Texas Project Units 3 & 4

jet

Attachment:
Question 15.08-2

cc: w/o attachment except*
(paper copy)

Director, Office of New Reactors
U. S. Nuclear Regulatory Commission
One White Flint North
11555 Rockville Pike
Rockville, MD 20852-2738

Regional Administrator, Region IV
U. S. Nuclear Regulatory Commission
611 Ryan Plaza Drive, Suite 400
Arlington, Texas 76011-8064

Kathy C. Perkins, RN, MBA
Assistant Commissioner
Division for Regulatory Services
Texas Department of State Health Services
P. O. Box 149347
Austin, Texas 78714-9347

Alice Hamilton Rogers, P.E.
Inspection Unit Manager
Texas Department of State Health Services
P. O. Box 149347
Austin, Texas 78714-9347

C. M. Canady
City of Austin
Electric Utility Department
721 Barton Springs Road
Austin, TX 78704

*Steven P. Frantz, Esquire
A. H. Gutterman, Esquire
Morgan, Lewis & Bockius LLP
1111 Pennsylvania Ave. NW
Washington D.C. 20004

*George F. Wunder
*Adrian Muniz
Two White Flint North
11545 Rockville Pike
Rockville, MD 20852

(electronic copy)

*George Wunder
*Adrian Muniz
Loren R. Plisco
U. S. Nuclear Regulatory Commission

Steve Winn
Joseph Kiwak
Eli Smith
Nuclear Innovation North America

Jon C. Wood, Esquire
Cox Smith Matthews

J. J. Nesrsta
R. K. Temple
Kevin Pollo
L. D. Blaylock
CPS Energy

RAI 15.08-2:

QUESTION:

STPNOC has revised the logic in the STP 3 & 4 FSAR Figures 15E-1a, "ATWS Mitigation Logic (ARI, FMCRD Run-In, RPT, Manual Initiation)," 15E-1b, "ATWS Mitigation Logic (SLCS Initiation, Feedwater Runback)," and 15E-1c, "ATWS Mitigation logic (SLCS Initiation, Feedwater Runback)" based on Tier 1 departure STD DEP T1 3.4-1 and STD DEP Admin. However, no changes have been made to the ATWS logic-related text contained in the FSAR, specifically subsections 2.2.8 and 3.4 in Tier 1, and subsection 7.4 and 15E.1 in Tier 2. Explanation of the logic changes shown on these revised FSAR figures has not been provided in either of the cited departures. It was also noted that some of the changes made to these FSAR figures are not annotated (back circled). Due to the stated reasons, NRC staff is unable to verify the acceptability of the departed ATWS mitigation logic. STPNOC is asked to provide an explanation and regulatory bases for all marked and unmarked logic changes shown on the revised FSAR figures 15E-1a, 15E-1b, and 15E-1c.

RESPONSE:

The changes incorporated in STP 3&4 COLA Part 2, Tier 2, Rev. 3, Figures 15E-1a and 15E-1c, were properly identified and correctly reflect the changes described in STD DEP T1 3.4-1. Also, a few administrative departures in Figures 15E-1a and 15E-1b are addressed below.

Administrative departure - For COLA Part 2, Tier 2, Rev. 3 Figure 15E-1a, "RPS" was changed to "Actuators for Scram Air Header Dump Valves" to more clearly identify the RPS source of the scram signal provided to the Rod Control and Information System (RCIS). This clarification is consistent with DCD Part 2, Tier 2, Sections 7.7.1.2 (j) and 15E.4 (5).

Administrative departure - For COLA Part 2, Tier 2, Rev. 3, Figure 15E-1b, a change was made to the manual ATWS "A" & "B" initiation logic to show 2 out of 3 voting signals. This logic change from the DCD figure representation is correct with respect to the DCD design; however, it was not properly identified as a change on the figure, and will be identified in a future COLA revision as shown below. This figure change reflects the ABWR DCD logic design as shown in the DCD Technical Specifications (TS) Figure B 3.3.1.3-1, and as a result of STD DEP 16.3-83, it also is described in the text of TS B 3.3.1.3. This logic design is consistent with the description in DCD Part 2, Tier 1, Sections 2.2.4 and 3.4 and Part 2, Tier 2, Sections 7.4.1.2 (5); however, this logic design was not properly identified as a change in Figure 15E-1b. In addition, the figure number (Figure 15-1b) in the DCD has a typographical error (omitting the E), which was corrected in COLA Rev. 2, but not identified as a change. This administrative departure will be identified as a change as shown below.

COLA Part 2, Tier 2, Rev. 3 Figure 15E-1b also shows a change to the NMS SRNM ATWS permissive relative to the 2 out of 4 logic. This figure change was not attributed to any departure,

and was not properly identified in COLA Part 2, Tier 2, Rev. 3. Therefore, this logic change in the figure will be removed and the design will revert back to that in the DCD. This also is consistent with the logic shown in the DCD TS Figure B 3.3.1.3-1; descriptive text in TS B 3.3.1.3; COLA Part 2, Tier 1, Sections 2.2.4 and 3.4; and Part 2, Tier 2, Section 7.6.1.1.1 (6).

Other COLA Rev. 3 Figure 15E-1b changes, such as to the manual runback of the feed pumps, connections, isolators, and nomenclature are being eliminated. The design will revert back to that shown in the DCD.

There are several additional changes on COLA Part 2, Tier 2, Revision 3 Figure 15E-1b related to the nomenclature changes identified in standard departure STD DEP T1 3.4-1. The nomenclature for trip logic units (TLUs) has changed to trip logic functions (TLFs), so "SSLC TLU" in Figure 15E-1b Note 1 becomes "TLF". Also, as discussed in STPNOC's RAI 07.02-2 response, the same departure eliminates the SSLC bypass unit as a separate entity; the logic for this unit has been incorporated in the Reactor Trip and Isolation System (RTIS).

In summary, Figure 15E-1b will now contain two administrative departures. The first administrative departure reflects the 2 out of 3 logic for manual ATWS that is described in other parts of the DCD. The second administrative departure corrects the figure number from 15-1b to 15E-1b. In addition, STD DEP T1 3.4-1 changes the terminology in Note 2 of Figure 15E-1b from "SSLC TLU" to "TLF" and also incorporates the logic for the SSLC bypass unit into the RTIS.

As a result of this RAI response, the next revision of COLA, Part 2, Tier 2, Rev. 3 Figure 15E-1b will be as shown below. For consistency, COLA Part 2 and 4 Figures B 3.3.1.3-1 also are changed to reflect the change from SSLC "TLU" to "TLF" and elimination of the SSLC bypass from the figure. Also, for consistency, COLA Part 2 and 4 Figures B 3.3.4.1-1 are changed to revert back to that found in the DCD. The changes shown to the figures in the following markups are to the DCD.

The following changes will be made to COLA Part 2, Tier 2, Appendix 15E, Chapter 16 and Part 4.

15E ATWS Performance Evaluation

The information in this appendix of the reference ABWR DCD, including all subsections, tables, and figures, is incorporated by reference with the following departures.

STD DEP T1 3.4-1 (Figures 15E-1a, 15E-1b, 15E-1c)

STD DEP 16.3-83 (Figure 15E-1b)

STD DEP Admin (Figures 15E-1a, 15E-1b)

15E.4 ~~ATWS Logic and Setpoints~~

~~STD DEP Admin~~

~~The mitigation of ATWS events is accomplished by a multitude of equipment and procedures. These include ARI, FMCRD run-in, feedwater runback, RPT, recirculation runback, ADS inhibit, and SLCS. The logic of this ATWS mitigation~~

~~is presented in Figures 15E-1a, 15E-1b and 15E-1c. The following are the initiation signals and setpoints for the above response:~~

(7) ~~ADS inhibit~~

- ~~Automated initiation of ADS is inhibited unless there is a coincident low reactor water level signal (level 1.5) and an APRM ATWS permissive signal whenever potential ATWS conditions exist as indicated by APRMs not being downscale.~~

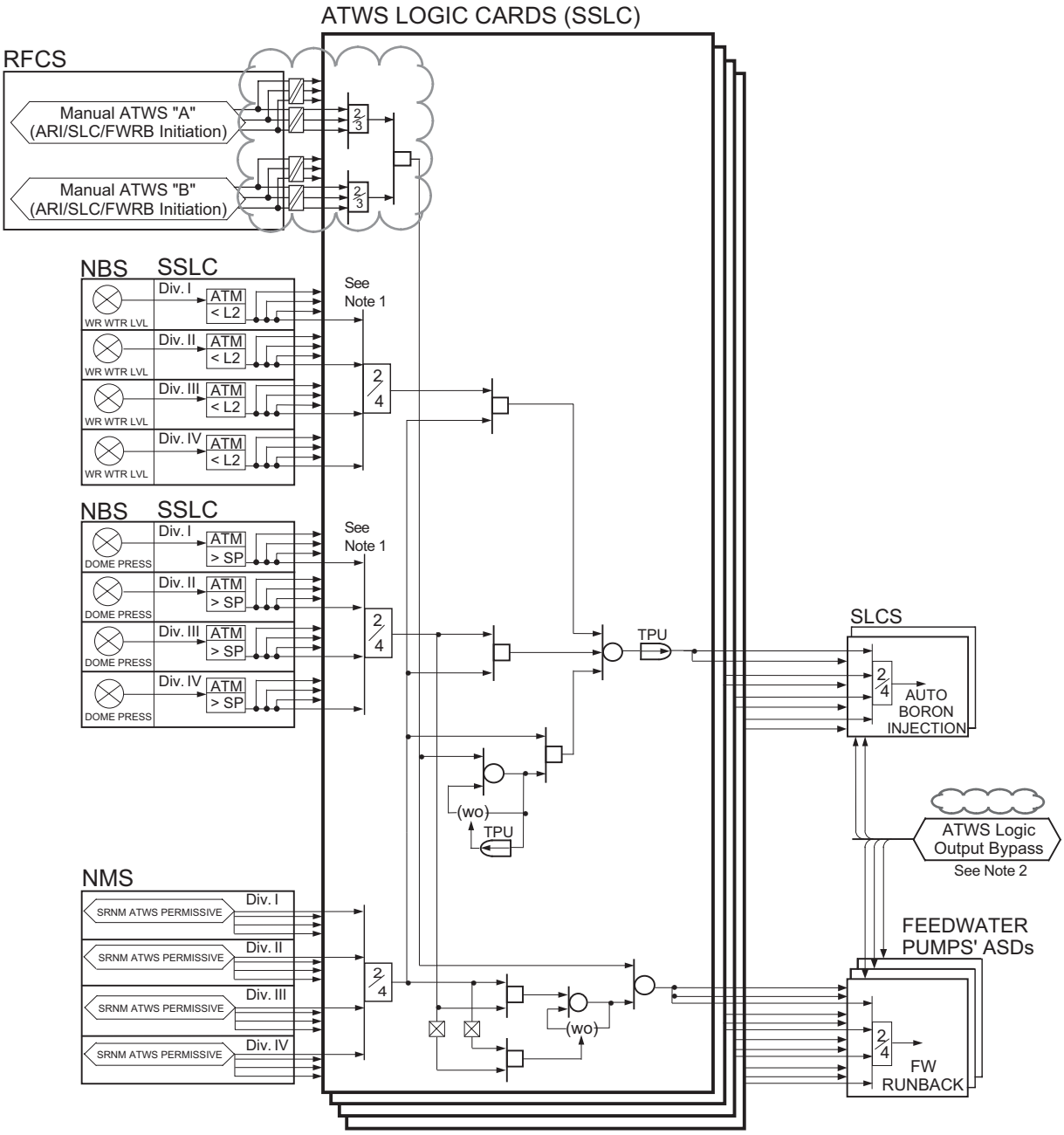

NOTES:
1. SSLC DIVISION-OF-SENSORS BYPASS APPLIES TO THIS VOTER
2. SAME ARRANGEMENT AS TLB OUTPUT LOGIC BYPASS BUT PERFORMED INDEPENDENTLY

Figure 15E-1b ATWS Mitigation Logic (SLCS Initiation, Feedwater Runback)

The following changes will be made to COLA Part 2, Tier 2, Subsection B 3.3.1.3 and Figure B 3.3.1.3-1, where the changes are identified in clouds.

B 3.3 INSTRUMENTATION

B 3.3.1.3 Standby Liquid Control (SLC) and Feedwater Runback (FWRB) Actuation

BASES

The information in this section of the reference ABWR DCD, including all subsections, is incorporated by reference with the following departure and site specific supplements. The site specific supplements partially address COL License Information Item 16.1.

STD DEP T1 3.4-1 (Figure B 3.3.1.3-1)

STD DEP 16.3-83

APPLICABLE SAFETY ANALYSIS, LCO AND APPLICABILITY	3. Manual ATWS-ARI/SLCS Initiation *The Manual ATWS-ARI/SLCS Initiation pushbutton channels introduce signals into the SLC and FWRB logic to provide manual initiation capability that is redundant to the automatic initiation. There are two pushbuttons and both must be ~~activated~~* actuated *to initiate* the *SLC*S *and FWRB* functions*. ~~Each switch has four contacts for SLC and FWRB initiation. Signals from both manual switches are sent to the logic in all four divisions. Each contact is a separate channel so there are two manual initiation channels per division.~~* Each pushbutton represents a single manual initiation channel (A, B), and sends redundant initiation signals to each of the channels of the RFCS Fault Tolerant Digital Controller (FTDC). The RFCS FTDC sends redundant manual initiation status signals to each of four ATWS Logic Processors (Divisions I, II, III, and IV). Each Logic Processor performs 2- out-of-3 voting of the manual initiation status signals received from the RFCS FTDC. *The contacts logic used for manual ARI are is covered in 3.3.4.1, "ATWS & EOC-RPT Instrumentation."*

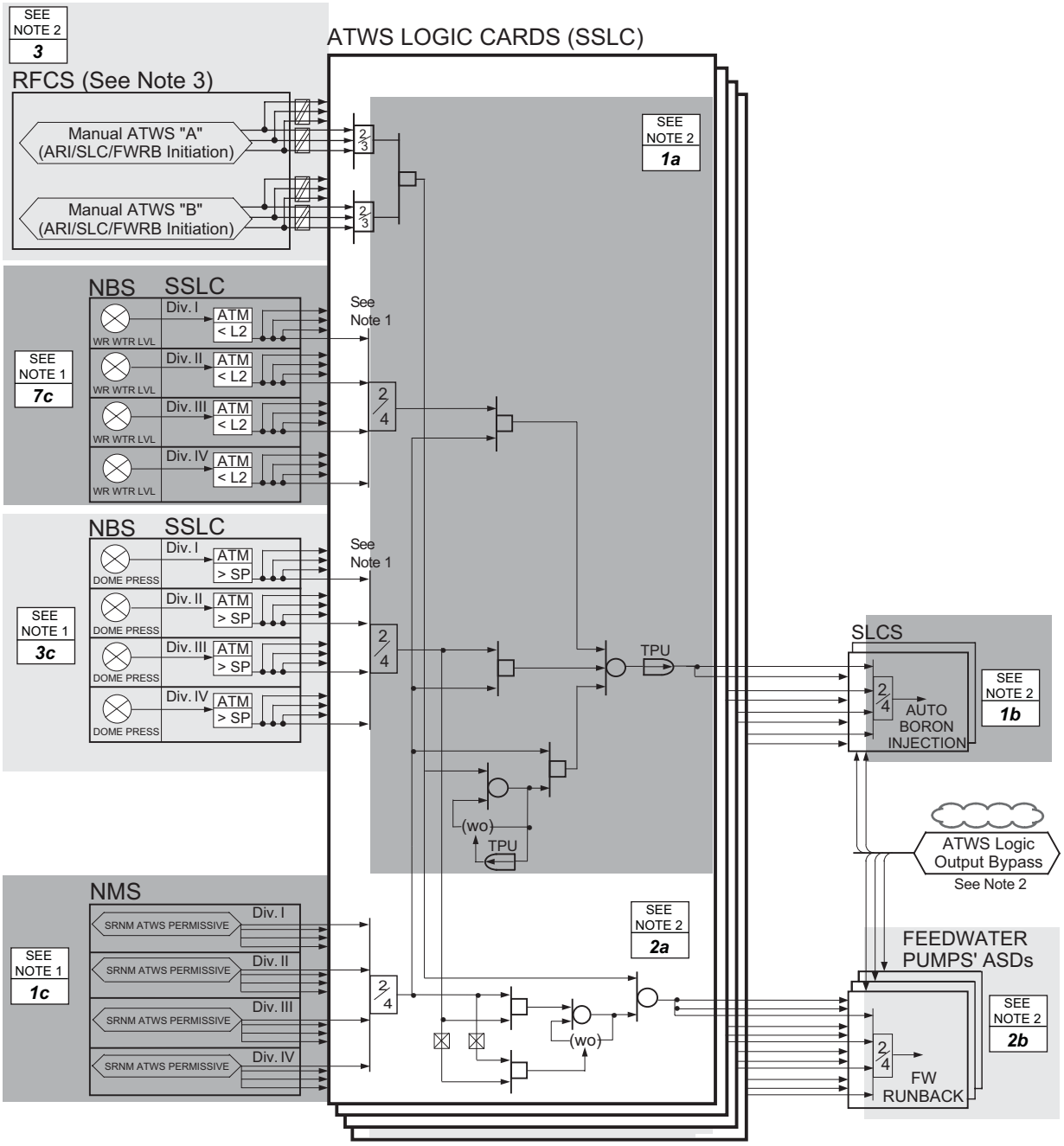

NOTES:
1. FUNCTION NUMBER AS LISTED IN TABLE 3.3.1.3-1 SSLC SENSOR INSTRUMENTATION
2. FUNCTION NUMBER AS LISTED IN TABLE 3.3.1.3-1 SLC and FWRB ACTUATION
3. FOR MANUAL ATWS-ARI FUNCTION, SEE FIGURE B 3.3.4.1-1 ATWS AND EOC-RPT INSTRUMENTATION CHANNELS
4. SSLC DIVISION-OF-SENSORS BYPASS APPLIES TO THIS VOTER
5. SAME ARRANGEMENT AS TLE OUTPUT LOGIC BYPASS BUT PERFORMED INDEPENDENTLY

FIGURE B 3.3.1.3-1 SSLC and FWRB INSTRUMENTATION CHANNELS

The following change also shows the revised Figure B 3.3.1.3-1 for COLA Part 4, without clouds.

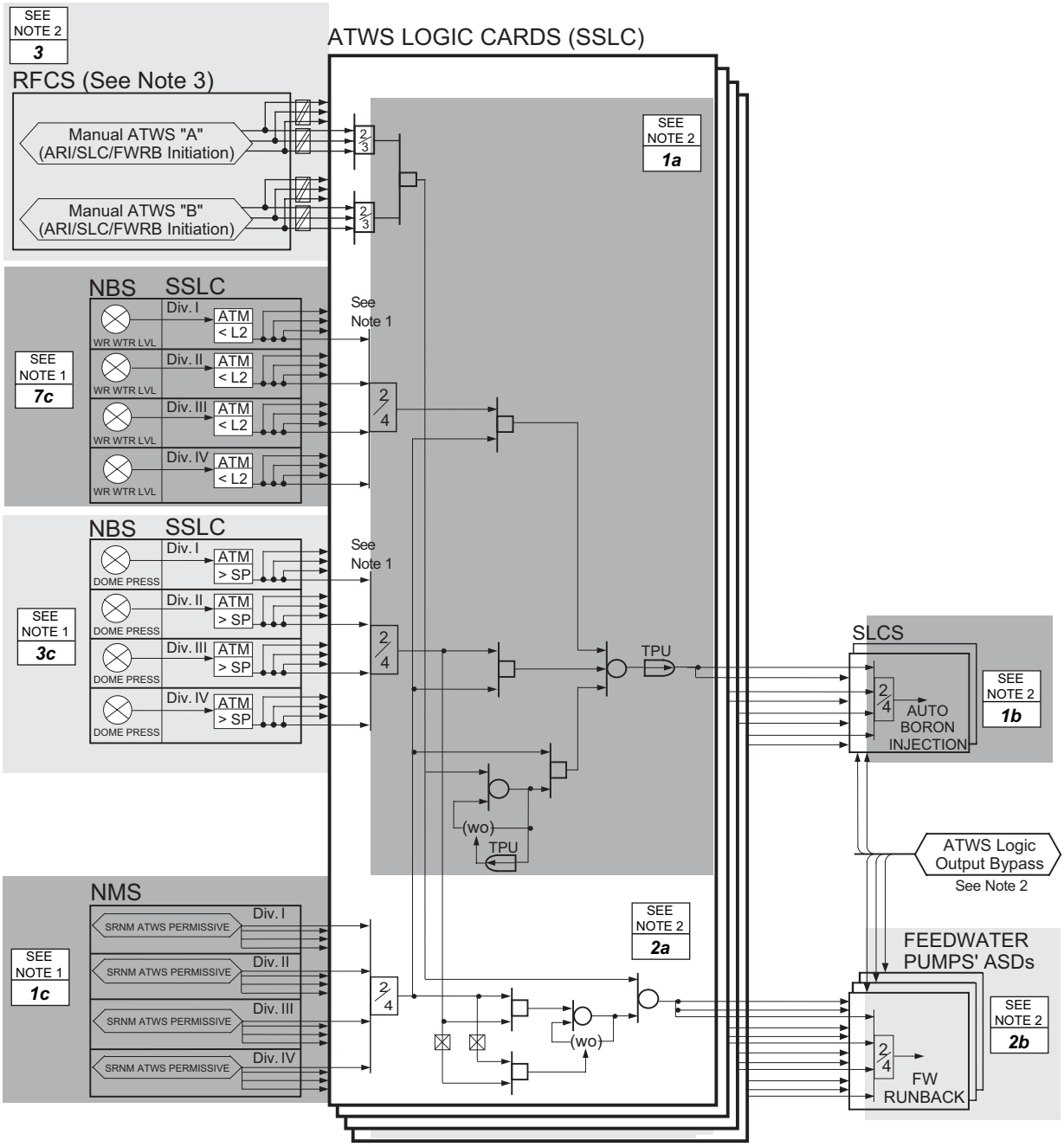

NOTES:
1. FUNCTION NUMBER AS LISTED IN TABLE 3.3.1.3-1 SSLC SENSOR INSTRUMENTATION
2. FUNCTION NUMBER AS LISTED IN TABLE 3.3.1.3-1 SLC and FWRB ACTUATION
3. FOR MANUAL ATWS-ARI FUNCTION, SEE FIGURE B 3.3.4.1-1 ATWS AND EOC-RPT INSTRUMENTATION CHANNELS
4. SSLC DIVISION-OF-SENSORS BYPASS APPLIES TO THIS VOTER
5. SAME ARRANGEMENT AS TLF OUTPUT LOGIC BYPASS BUT PERFORMED INDEPENDENTLY

FIGURE B 3.3.1.3-1 SSLC and FWRB INSTRUMENTATION CHANNELS

The following figure will be used in COLA Part 2, Tier 2, Figure B 3.3.4.1-1, which reverts back to the DCD version and has “SSLC” identified in Note 4; however, the existing COLA change from “DTU” to “DTF” is identified with clouds for the ELCS inputs.

STD DEP T1 3.4-1

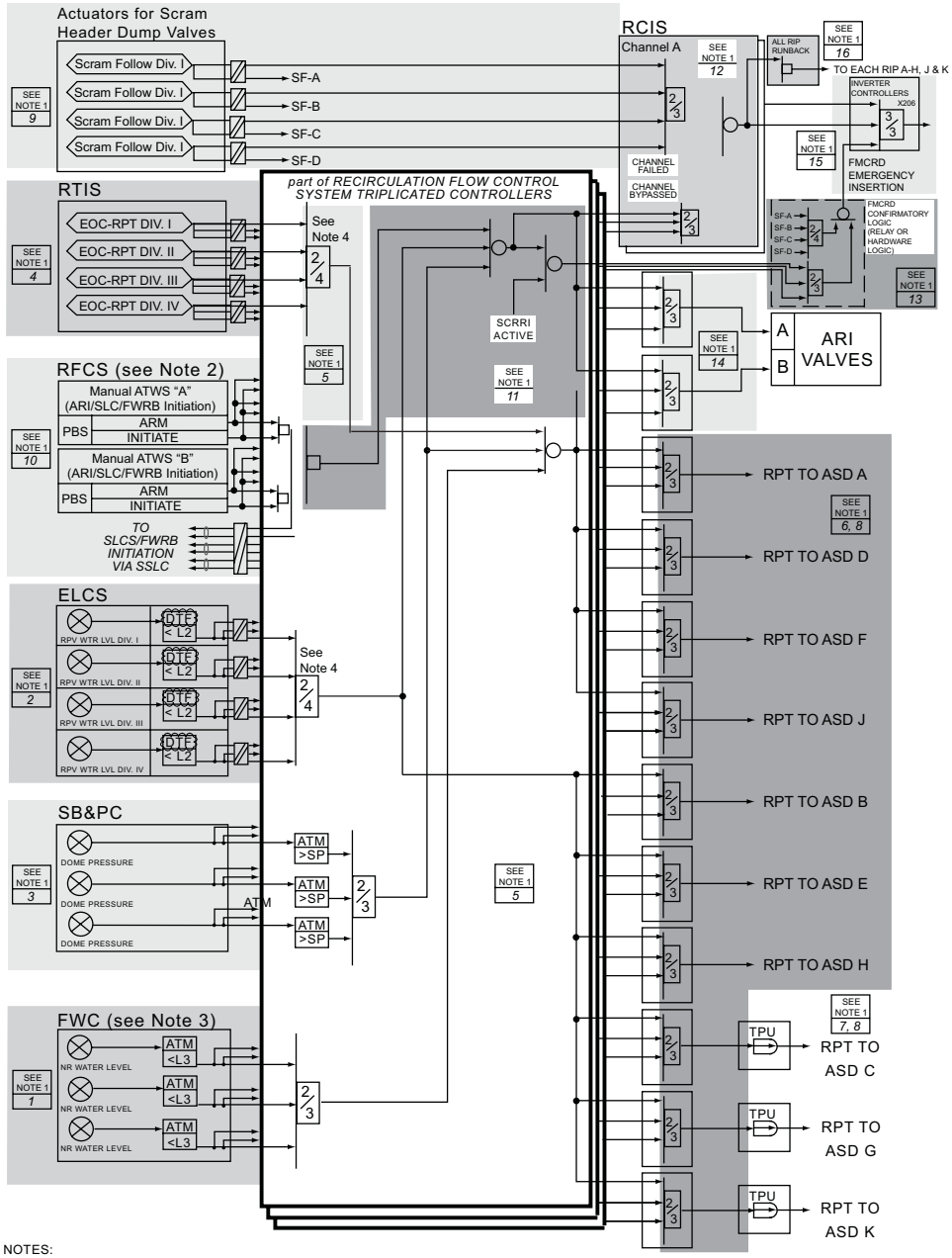

NOTES:
1. FUNCTION NUMBER AS LISTED IN TABLE 3.3.4.1-1 ATWS and EOC-RPT INSTRUMENTATION
2. FOR MANUAL SLC/FWRB FUNCTION, SEE FIGURE B 3.3.1.3-1 SLC and FWRB INSTRUMENTATION CHANNELS
3. 4-PUMP RPT ON L3 IS NOT AN ATWS MITIGATION EVENT
4. SSLC DIVISION-OF-SENSORS BYPASS APPLIES TO THIS VOTER

Figure B.3.3.4.1-1 ATWS and EOC-RPT Instrumentation Channels

The following changes will be made to COLA Part 4, Technical Specifications, Figure B 3.3.4.1-1, with the change (add SSLC to Note 4).

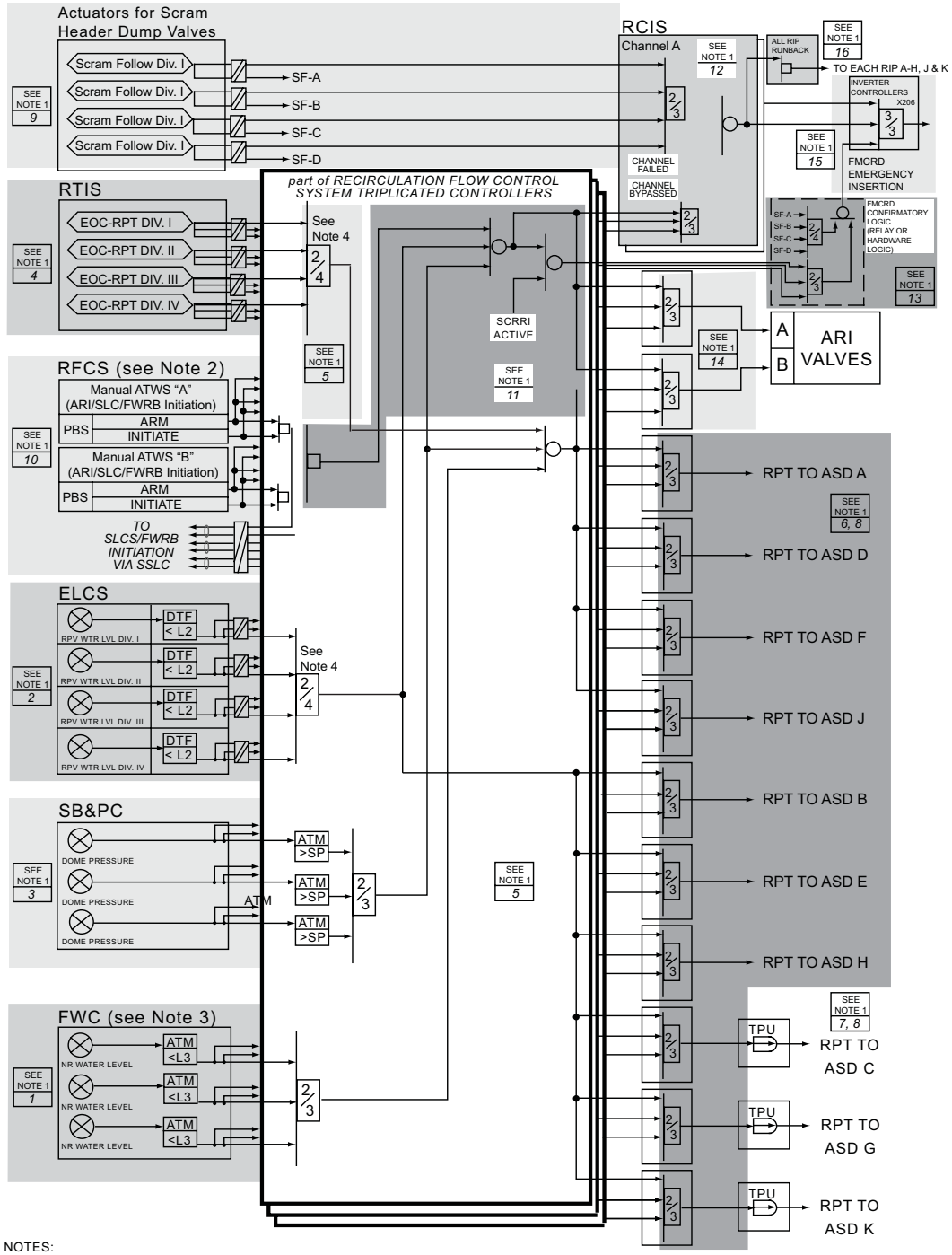

NOTES:
1. FUNCTION NUMBER AS LISTED IN TABLE 3.3.4.1-1 ATWS and EOC-RPT INSTRUMENTATION
2. FOR MANUAL SLC/FWRB FUNCTION, SEE FIGURE B 3.3.1.3-1 SLC and FWRB INSTRUMENTATION CHANNELS
3. 4-PUMP RPT ON L3 IS NOT AN ATWS MITIGATION EVENT
4. SSLC DIVISION-OF-SENSORS BYPASS APPLIES TO THIS VOTER

Figure B.3.3.4.1-1 ATWS and EOC-RPT Instrumentation Channels