123 Main Street
White Plains, New York 10601
914 681.6240

USNRC-DS

1987 SEP 25 A 9:49

New York Power Authority

John C. Brons
Executive Vice President
Nuclear Generation

September 21, 1987
IPN-87-043

U.S. Nuclear Regulatory Commission
ATTN: Document Control Desk
Washington, D.C. 20555

Subject: Indian Point 3 Nuclear Power Plant
Docket No. 50-286
Response to Generic Letter 87-12, "Loss of Residual Heat Removal While Reactor Coolant System is Partially Filled"

Dear Sir:

This letter provides the Authority's response to the information requests listed in the text of the subject generic letter (GL 87-12). This response constitutes the Authority's review of NRC concerns expressed in GL 87-12 regarding maintenance activities, personnel training, instrumentation available, technical specifications, limiting plant conditions, system availability, analytical basis, and procedures associated with operating the Residual Heat Removal (RHR) system while the Reactor Coolant System (RCS) is in the partial fill condition.

Changes to procedures have been made in the past based on previous reviews of decay heat removal incidents and are discussed in the attached response. Also described are administrative and procedural changes which will be implemented in the future in order to strengthen plant staff ability to operate safely in a partial fill condition. In support of these changes the Authority will develop decay heat load information that will outline for the operator the time margins available to cold shutdown limits. A Westinghouse proposed study, if accepted by the Westinghouse Owners Group, will form the basis for this work.

8709280012 870921
PDR ADOCK 05000286
P PDR

A061
1/1

Should you or your staff have any questions regarding this matter, please contact Mr. P. Kokolakis of my staff.

Very truly yours,

John C. Brons
Executive Vice President
Nuclear Generation

STATE OF NEW YORK
COUNTY OF WESTCHESTER

Subscribed and Sworn to before me
this 21 day of September 1987

Barbara Ann McGuire (Taggart)
Notary Public

BARBARA ANN McGUIRE
Notary Public, [illegible] New York
No. 4[illegible]437
Qualified in [illegible] County
Commission Expires Jan. 27, 19[illegible]

Attachments
cc: U.S. Nuclear Regulatory Commission
631 Park Avenue
King of Prussia, PA 19406

Resident Inspector's Office
Indian Point Unit 3
U.S. Nuclear Regulatory Commission
P.O. Box 377
Buchanan, NY 10511

Joseph D. Neighbors, Senior Project Manager
PWR Project Directorate I-1
Division of Reactor Projects I/II
U.S. Nuclear Regulatory Commission
7920 Norfolk Avenue
Bethesda, MD 20014

ATTACHMENT I TO IPN-87-043

RESPONSE TO GENERIC LETTER 87-12 REQUESTS:

LOSS OF RHR WHILE RCS IS PARTIALLY FILLED

NEW YORK POWER AUTHORITY
INDIAN POINT 3 NUCLEAR POWER PLANT
DOCKET NO. 50-286
DPR-64

Response to Generic Letter 87-12 Requests:

Loss of RHR while RCS is Partially Filled

Item 1: Request

A detailed description of the circumstances and conditions under which your plant would be entered into and brought through a draindown process and operated with the RCS partially filled, including any interlocks that could cause a disturbance to the system. Examples of the type of information required are the time between full-power operation and reaching a partially filled condition (used to determine decay heat loads), requirements for minimum steam generator (SG) levels, changes in the status of equipment for maintenance and testing and coordination of such operations while the RCS is partially filled, restrictions regarding testing, operations, and maintenance that could perturb the nuclear steam supply system (NSSS), ability of the RCS to withstand pressurization if the reactor vessel head and steam generator manway are in place, requirements pertaining to isolation of containment, the time required to replace the equipment hatch should replacement be necessary; and requirements pertinent to reestablishing the integrity of the RCS pressure boundary.

Response

Draining the Reactor Coolant System:

Refer to Figures 1 and 2 for general arrangements of RCS piping and connections. Initial conditions for draining RCS:

1. RCS temperature is less than 140°F if draining for refueling and less than 200°F if draining for maintenance.

2. Residual Heat Removal System in service.

3. Purification through demineralizer established to remove Co-58.

4. Reactor Coolant Pumps secured and No. 1 seal water return and bypass valves are shut.

5. Pressurizer bubble collapsed and temperature $\leq$ 200°F.

6. Communications exist between Control Room and Containment.

With the initial conditions established, the draindown process is begun by reducing RCS pressure to atmospheric through the letdown backpressure control valve (PCV-135). Refer to Figure 3. Place the Chemical Volume Control System (CVCS) in the low pressure purification mode by opening low

pressure purification isolation valve (HCV-133) and running a charging pump to return purification flow to the RCS. Manually open both pressurizer spray valves. Line up the pressurizer to the Pressurizer Relief Tank (PRT) by opening one pressurizer power operated relief valve and its associated motor operated valve. Establish a N_2 blanket at 0.5 psig from the N_2 supply header through pressurizer vent valve (527). Open the loop drain valves as required to achieve the desired drain rate. The pumping capacity of the operating Reactor Coolant Drain Tank (RCDT) pump and the need to prevent drawing a vacuum in the PRT limit the drain rate when using this method. An alternate method of draining is to divert low pressure purification flow (from HCV-133) to the CVCS Holdup Tanks. When at 10% span on pressurizer level, secure loop drain, shut reactor vessel flange leakoff valves (501, 502, and 544) and valve in tygon hose level indication as follows (refer to Figure 4):

1. Check shut second loop drain valve (508B) and the level hose isolation valve (540).

2. Vent tygon hose to pressurizer vent line (not shown in Figure 4).

3. Open loop drain valve (508A) and SLOWLY open level hose isolation valve (540) while observing level.

When tygon hose level indication is established, draining is recommenced through HCV-133 or the loop drains with the exception of Loop No. 31. The operator is cautioned at this point in the procedure not to use Loop 31 drains since the tygon hose is connected to this loop and false level readings will occur.

When level reaches the top of the reactor vessel (RV) head (76' 6"), the RV head vent valves are opened to vent the head to the PRT to prevent drawing a vacuum in the head. The RCS may then be drained to the 62.0 ft. elevation which is the mid-level of the hot leg piping. This is to prevent uncovering the RHR suction piping connected to the Loop No. 32 hot leg and to avoid cavitation of the operating RHR pump, both concerns of which the operator is cautioned against. The operator is also cautioned to expect a level increase from draining of the steam generator U-tubes when level reaches the top of the hot leg piping causing vacuum to break in the tube bundle.

<u>RHR System Interlocks</u>
During a plant shutdown and cooldown, the reactor coolant flows from the hot leg of loop 32 through two motor operated valves, 731 and 730, which are located inside the containment. Figure 5 illustrates the RHR System. Valves 730 and 731 are pressure interlocked to prevent opening if

RCS pressure is above 450 psig. This prevents inadvertent overpressurization of the (RHR) loop. Both valves are provided with separate pressure channels that sense RCS pressure. Each pressure channel provides two interlocks, first it prevents the valve from being opened whenever RCS pressure is above 450 psig and secondly, it automatically closes the valve when RCS pressure exceeds 550 psig. Each valve operator and its associated pressure channel circuitry is powered from different instrument buses to preclude any single failure from rendering both valve control circuits inoperable. Valve operator 730 is powered from MCC 36A and 731 from MCC 36B. Additionally, each pressure channel has a separate visual indicator on the chart recorder panel next to the flight panel in the control room to show channel operability.

Valves 730 and 731 have individual indicating lights and control switches located on the supervisory panel in the control room. The valves are closed during normal plant operations. A visual and audible alarm actuates on the safeguards panel in the control room when either valve leaves its fully open position. Additionally, valves 730 and 731 are interlocked with containment sump valves 885A/ 885B, and with high head safety injection valves 888A/888B such that if 730 is open 885B and 888B will not open. These interlocks prevent the reactor coolant from being drained to the containment sump (via valves 885A and B) or the Refueling Water Storage Tank (RWST) through the safety injection recirculation line (via valves 888A and B). Both suction valves are also interlocked with valve 883 such that 883 will not open if 730 or 731 is open, and 883 will close if 730 or 731 move from their closed seat. This is to prevent letdown of unpurified primary coolant into the RWST via RHR suction.

<u>Cold Shutdown Operation in Partial Fill Condition:</u>
The reactor plant is operationally limited to a minimum of 24 hours and generally requires 2 days from full power operation before starting draindown for refueling or maintenance. Steam generator levels are not necessarily relied upon as heat sinks for decay heat removal during cold shutdown conditions. However, partial drain or dry lay-up of steam generators is minimized to preclude various corrosion concerns. Therefore, secondary side inventory will generally be available.

Operations, testing and maintenance are conducted under the direction of the Shift Supervisor regardless of plant condition. Work clearances are required for testing and maintenance and must be authorized by the Senior Reactor Operator under the supervision of the Shift Supervisor, who remains cognizant of plant conditions at all times whether in partial fill or not. Restrictions are applied to work clearances which reflect current plant status. Equipment

status is administratively tracked through the Operating Orders Book. Operating Orders are used to tag out equipment or systems for maintenance or testing. The Control Room Status Board also shows the status of major plant equipment and system tank levels not readily obtainable from Control Room indication. Review of equipment status is a part of normal shift turnover practice.

The time required to establish containment and RCS integrity will vary depending on the maintenance and testing activities in progress. Replacement of the equipment hatch and reinstallation of manway covers to close the RCS could take as long 8 hours. Other activities to restore integrity such as valve lineups and penetration isolation should require less time.

Pressurization Due to Loss of RHR

The possibility of an RCS pressure spike from spurious closure of RHR suction valves is noted and dealt with in ONOP-RHR-1, under the "Closure of Valves 730 and 731" section.

The potential for unexpected RCS pressurization caused by a loss of RHR while at mid-loop is only possible when the RCS is essentially intact. The length of time the RCS is closed while at mid-loop during a refueling or maintenance outage is necessarily very short. This is a transition configuration involved in bringing the plant from an operating cold shutdown condition to an open RCS condition for maintenance.

The Authority, as a member of the Westinghouse Owners Group (WOG), is currently reviewing a Westinghouse proposal to evaluate the thermal hydraulic aspects of a loss of RHR during mid-loop operation for all Westinghouse plants. The purpose of this proposed study is to assess the extent of RCS pressurization occurring from a loss of RHR at mid-loop. The effect on pressurization of decay heat removal by the steam generator U-tubes (with and without air entrainment) during boil-off would be considered. This will determine the extent of operator action necessary and the time available for recovery. Upon acceptance by the WOG, it is expected that this work, when completed, would form a portion of the analytical basis dealing with recovery from the loss of RHR while in the mid-loop condition.

Item 2: REQUEST

A detailed description of the instrumentation and alarms provided to the operators for controlling thermal and hydraulic aspects of the NSSS during operation with the RCS partially filled. You should describe temporary connections, piping, and instrumentation used for this RCS condition and the quality control process to ensure proper functioning of

such connections, piping, and instrumentation, including assurance that they do not contribute to loss of RCS inventory or otherwise lead to perturbation of the NSSS while the RCS is partially filled. You should also provide a description of your ability to monitor RCS pressure, temperature, and level after the RHR function may be lost.

RESPONSE:

Local Level Indication

Local indication of RCS water level is provided by a tygon hose standpipe arrangement (refer to Figure 4) whenever the reactor vessel head is removed or the system is otherwise depressurized. The tygon level indicating system is permanently connected. The operator only has to valve in the system to place it in service. As such, quality control of installation is not required. As shown on Figure 4, the level indication tube is connected to the low point drain of Loop No. 31. The tygon tube is connected to a fitting downstream of RC-540, run vertically along the shield wall adjacent to RCP 31 and up to the 80' elevation of Containment. The hose is permanently affixed to the shield wall. Elevation markings adjacent to the hose provide level indication reference. The tygon hose is then routed back to the nitrogen manifold supplying the pressurizer vent line (not shown in Figure 4). It is valved into service by opening RCS-508A and RCS-540. During this time, RCS-508B and the reactor vessel flange leakoff drain valve RC-539 must be kept shut to avoid draining the RCS.

When in service, water level in the tygon tube tracks RCS water level but because the RCP casing adapter and diffuser act as a weir to impede backflow through an idle pump, the tygon tube level lags behind the true RCS level during transients. Each RCP is equipped with a small drain hole between the diffuser and the pump section which reduces the weir effect and the level indication time lag.

In addition, the Reactor Vessel Level Indicating System (RVLIS) required by NUREG-0737 has been installed and will be available to provide supplemental level indication to the control room operator.

RCS Temperature and Pressure Indication

In cold shutdown partial fill, RCS temperatures changes are monitored through the RHR system temperature indicators. RHR is normally lined up to discharge through one or both heat exchangers to all four cold legs via the safety injection manifold. RHR pump suction is from the Loop 32 hot leg via autoclosure interlock valves 730 and 731. RHR heat exchanger inlet temperature is monitored in the control room by recorder at the Auxiliary Coolant System Panel which graphs out temperature in green pen. No. 31 and 32 heat exchanger outlet temperatures are displayed in red and blue pen

respectively, by the same recorder. RCS temperature and cooldown are monitored in this normal mode of RHR operation by comparison of red or blue pen graph traces with the green trace. With a loss of RHR, core exit thermocouples are the most reliable instruments available for determining RCS temperature and its rate of change (without forced cooling). Core thermocouples are normally expected to be available during initial drain to mid-loop when the RV head is in place. During refueling operations core thermocouples are not available, since their instrument lines are removed to lift the RV head. Unlike temperature indication, RCS level will still be available following a loss of RHR since tygon hose level is not flow dependent.

PT-402 and PT-403 loop pressure instruments provide wide range RCS pressure indication. A more narrow range of pressure indication (PT-135) is available in the event RHR flow is lost. In this event, HCV-133 is opened and letdown valve PCV-135 is shut to provide RHR pump discharge pressure indication in the control room by PT-135 for pump restart observation. This in turn also gives the control room nominal RCS pressure indication (0 - 600 psig) as long as PCV-135 is shut and RHR pumps are off.

Item 3: <u>REQUEST</u>
Identification of all pumps that can be used to control NSSS inventory. Include: (a) pumps you require be operable or capable of operation (include information about such pumps that may be temporarily removed from service for testing or maintenance), (b) other pumps not included in item a (above), and (c) an evaluation of items a and b (above) with respect to applicable TS requirements.

<u>RESPONSE</u>
In the cold shutdown condition, whether in partial fill or not, both RHR pumps are required to be operable except under conditions identified by Technical Specification 3.3.A.7 as follows:

"When the reactor coolant T_{avg} is less than 200°F, but not in the refueling operation condition, two residual heat removal pumps together with their associated heat exchangers, piping and valves shall be operable.

a. With less than the above operable , initiate corrective action to return the required equipment to an operable status as soon as possible and suspend any operation which would reduce the boron concentration of the reactor coolant system.

b. The above requirements may be suspended during maintenance, modifications, testing, inspection or repair provided that:

1) an alternative means of decay heat removal is available and return of the system within sufficient time to prevent exceeding cold shutdown requirements is assured;

2) RCS temperature and the source range detectors are monitored hourly; and

3) no operations are permitted which would reduce the boron concentration of the reactor coolant system."

During fuel handling, RV head removal or/installation, two RHR pumps are normally available. If only one pump is available, water level must be at least 23 feet above the RV flange. This is to assure an adequate heat sink is available to allow time to initiate diverse methods of cooling if a single component failure occurs in the remaining RHR train. In addition, up to three safety injection pumps, three charging pumps and two recirculation pumps may be available to control RCS inventory but are not required to be operable by technical specifications below 200°F. Charging is normally available because low pressure purification is desirable when in mid-loop. In an emergency, procedures direct the use of charging or safety injection pumps to restore RCS inventory.

Item 4. REQUEST

A description of the containment closure condition you require for the conduct of operations while the RCS is partially filled. Examples of areas of consideration are the equipment hatch, personnel hatches, containment purge valves SG secondary-side condition upstream of the isolation valves (including the valves), piping penetrations, and electrical penetrations.

RESPONSE

As required by technical specifications containment integrity cannot be violated unless the reactor is in the cold shutdown condition. The cold shutdown condition is defined to exist when the reactor is subcritical by at least 1% $\Delta k/k$ and T_{avg} is $\leq$ 200°F. "Containment integrity is defined to exist when:

1. All non-automatic containment isolation valves which are not required to be opened during accident conditions, except those required to be open for normal plant operation or testing, are closed and blind flanges installed where required.

2. The equipment hatch is properly closed.

3. Both doors in each personnel air lock are properly closed unless being used for entry, egress or maintenance at which time at least one air lock door shall be closed.

4. All automatic containment isolation valves are either operable or in the closed position or isolated by a closed manual valve or flange that meets the same design criteria as the isolation valve."

In cold shutdown then, including partial fill, containment integrity is not required except during fuel handling. During fuel handling, RV head removal or installation, the following conditions regarding containment must be met:

1. The equipment door and at least one door in each personnel air lock shall be properly closed. When a closure plate with a personnel door that prevents direct air flow from containment is used, it shall be properly closed.

2. At least one isolation valve shall be operable, locked closed or blind flanged in each line penetrating the containment which provides a direct path from containment atmosphere to the outside.

3. The containment vent/purge system, including the radiation monitors which initiate isolation, shall be tested and verified to be operable within 100 hours prior to refueling operations.

In the partial drain condition, containment integrity would normally not be required. However, the procedure for loss of RHR requires that containment integrity be established if operator immediate actions fail to restore RHR.

Item 5. <u>REQUEST</u>
Reference to and a summary description of procedures in the control room of your plant which describe operation while the RCS is partially filled. Your response should include the analytic basis you used for procedures development. We are particularly interested in your treatment of draindown to the condition where the RCS is partially filled, treatment of minor variations from expected behavior such as caused by air entrainment and de-entrainment treatment of boiling in the core with and without RCS pressure boundary integrity, calculations of approximate time from loss of RHR to core damage, level differences in the RCS and the effect upon instrumentation indications, treatment of air in the RCS/RHR system, including the impact of air upon NSSS and instrumentation response, and treatment of vortexing at the connection of the RHR suction line(s) to the RCS.

Explain how your analytic basis supports the following as pertaining to your facility: (a) procedural guidance pertinent to timing of operations required instrumentation, cautions and critical parameters; (b) operations control and communications requirements regarding operations that may perturb the NSSS, including restrictions upon testing,

maintenance, and coordination of operations that could upset the condition of the NSSS, and (c) response to loss of RHR, including regaining control of RCS heat removal, operations involving the NSSS if RHR cannot be restored, control of effluent from the containment if containment was not in an isolated condition at the time of loss of RHR, and operations to provide containment isolation if containment was not isolated at the time of loss of RHR (guidance pertinent to timing of operations, cautions and warnings, critical parameters, and notifications is to be clearly described).

RESPONSE

A. SUMMARY OF PROCEDURES

SOP-RCS-10: Draining the Reactor Coolant System
A summary of this procedure was provided in the response to Item 1 above. Some precautions and limitations are:

1. Do not lower level below nozzle centerline where RHR pump suction starts to become uncovered. At this Elevation (62 ft.), frequently monitor level indication and RHR pump operation to ensure pumps are not cavitating.

2. Limitations regarding tygon hose level indication:

   a. To prevent false level indication, loops should be drained slowly since indicated level lags actual level.

   b. After loops are drained to desired level, the operator should anticipate a level increase as steam generator tubes drain.

   c. To prevent false hose level indication, Loop 31 drains shall not be used.

SOP-RCS-13: Draining the RCS Intermediate Loop
This procedure provides for the safe and controlled lowering of the water level in an intermediate loop (piping between the steam generator (S/G) and the reactor coolant pump (RCP). Initial conditions are similar to SOP-RCS-10 except that:

1. RCS is at the 62'-0" elevation per SOP-RCS-10.

2. The allowable time that RHR can be shutdown without exceeding cold shutdown requirements has been calculated. The allowable time of RHR shutdown must be greater than the estimated time for draining, repair, refill,venting, and placing the RHR system back in service.

3. RCS temperature $\leq 140^{o}F$.

4. If the RV head is in place, then incore thermocouples are in place and monitored manually or trended by computer.

5. RWST is available as an emergency source of borated makeup.

Precautions other than those listed under SOP-RCS-10:

1. Allow sufficient time after shutdown for the value of decay heat to drop low enough for the RHR system to be out of service during the entire operation (i.e., draining, repairs, refill and venting) without exceeding cold shutdown limits.

2. If Loop 31 is to be drained an alternate hose level indication must be established.

3. During non-work periods on the equipment (valve, flange, etc.), the RCS opening will be closed with a suitable blank to prevent inadvertent spilling of coolant if the level in the intermediate loop was to increase.

4. The RCS level hose will be constantly monitored during this evolution and reported to the Control Room.

The procedure is commenced by securing RHR and low pressure purification, and shutting motor operated valves 899A & B, 730, 731, 822A & B. The intermediate leg is then drained as rapidly as possible (200 GPM) to the 55'0" elevation. Calculations show that it should take 15 minutes to complete draining. Though drainage from the cold leg is partially blocked by the weir effect of the RCP, RV level could decrease by 1" every 9 minutes if not made up while keeping the intermediate leg empty. The hot leg is prevented from draining into the intermediate leg by the S/G U-tubes. The intermediate leg is not needed for core cooling since RHR takes suction on the Loop 32 hot leg and returns to the cold legs. By making up cold leg spillover, RCS level is maintained and the availability of RHR cooling is enhanced should the need arise to rapidly restore core cooling.

When repairs are completed and RCS closed, the intermediate leg is allowed to refill and level is restored to 62'-0" using charging pumps in the low pressure mode of CVCS. The NSSS is returned to the previous valve lineup of RHR and CVCS, and RHR pumps are restarted. The pumps are monitored for cavitation and vented if needed. RHR flows are throttled to maintain RCS temperature or cooldown as necessary.

<u>ONOP-RHR-1: Loss of Residual Heat Removal Flow</u>
Operator action in response to loss of RHR is dependent on status of the RCS (open or closed, RV head installed or removed). Immediate actions in any event are:

1. Start a second RHR pump or restore at least one pump.

2. Check RHR valve lineup by observing valve status indications or valve switch positions.

3. Establish containment integrity if RHR is not restored and core cooling is required.

Subsequent actions are as follows:

RV Head Installed
RCP Available/ RCS Closed - Pressurize RCS through charging and letdown back pressure control to 400 psig and start an RCP. Establish and maintain S/G at 80% wide range using Auxiliary Feed Pumps or Condensate Pumps if auxiliary feed is not available. Cooldown using S/G atmospheric steam dumps or feed and bleed S/G if secondary side is below saturation temperature. If unable to feed a S/G, add water to the RCS using a charging pump or safety injection pump while simultaneously draining.

RCP Unavailable/RCS Closed - The actions are the same as above except the RCS is not pressurized and natural circulation is relied on for cooling rather than a RCP.

RCP Unavailable/RCS Open - Core cooling is accomplished by feed and bleed of the RCS using charging or safety injection pumps.

RV Head Removed
The reactor cavity is filled using safety injection pumps and cooling is established by means of containment fan cooler units.

Closure of 730 or 731 while on RHR

CAUTION

If either of the RHR suction isolation valves, 730 or 731, close or begin to automatically close while on RHR and the RCS is solid, prompt operator attention is required to prevent an RCS pressure spike.

NOTES: 1) Once started, closing of the valves cannot be stopped. There will be approximately three and a half minutes before the valves are fully closed.

2) Refer to Technical Specification Figure 3.1.A-3, Curve III for RCS pressure limitations.

1. Readjust PC-135, (Letdown Backpressure Controller), to maintain a backpressure of 50 psig (approximately 10% on the controller).

NOTE: If letdown temperature is above 250°F, backpressure should be limited to 120 psig (approximately 20% on the controller).

2. Stop all charging pumps.

3. Stop all RHR pumps.

4. Verify all letdown orifice values (200A, 200B, 200C) are open and that a letdown path exists.

5. Ensure that the power operated relief valves open if required.

6. Stop all reactor coolant pumps if the No. 1 seal delta-P cannot be maintained greater than 325 psig.

7. When 730 and/or 731 reach the fully closed position, immediately reopen them.

   NOTE: RCS pressure must be less than 450 psig for the valves to open.

8. Readjust HCV-133 and PCV-135 to maintain operating pressure for the reactor coolant pumps.

9. If previously opened, ensure the power operated relief valves close when pressure decreases. If not, close the block valves. Re-establish charging and letdown in accordance with SOP-CVCS-2.

B. ANALYTICAL BASIS OF PROCEDURES

Procedural precautions for draindown and mid-loop operation are directed at maintaining the reactor in the cold shutdown condition (below 200°F) as required by Technical Specification by minimizing the potential for loss of RHR.

Accordingly, procedure SOP-RCS-10 cautions that water level not be lowered below centerline of the reactor coolant outlet nozzles (62 ft. elevation). When level is lowered to this point, the operator is instructed to frequently monitor the level indication and RHR pump operation to ensure that the pumps are not cavitating.

Elevation 62'-0" is the centerline of Loop 32 hot leg, the loop from which the RHR pumps take suction. Since the RHR suction connection to the loop piping comes off the lower portion of the pipe at a 45° angle to the horizontal, some four to five inches of elevation are available before the entrance to the RHR suction becomes exposed. Recognizing the level margin available, level is procedurally restricted to

mid-loop and the operator directed to frequently monitor level indication and pump operation for evidence of cavitation.

The fact that there have been no loss of RHR events at Indian Point 3 suggests that the NPSH available when drained to mid-loop exceeds the NPSH required by the RHR pumps even if vortexing with minor air entrainment were to initiate from the mid-loop level. With the pump suction centerline at the seventeen foot elevation there is forty five feet of suction head available when drained to mid-loop. NPSH required for the RHR pumps at design flow rate of 3000 gpm is eleven feet. In practice, flow is less than design as the outlet valve of the operating heat exchanger is normally throttled whenever RHR is in service. Thus, as long as level is maintained at or above mid-loop no abrupt loss of suction is expected. Potential vortexing or air ingestion (if any) at mid-loop would not be expected to result in an immediate loss of suction. In general, centrifugal pumps such as the RHR pumps are less susceptible to the effects of air entrainment than other pump types. Except in extreme cases centrifugal pumps will continue to pump liquid with minor air entrainment. The effects of air entrainment range from cavitation to severe pump vibration and noise, thus the requirement to monitor RHR pump operation and level indication frequently when the RCS is drained to mid-loop.

Concerning calculations of approximate time from loss of RHR to boiling in the core and core damage, no explicit requirements or precautions are contained in SOP-RCS-10, since a loss of RHR is not anticipated as a result of these procedural actions. SOP-RCS-13 however, requires that the allowable time that RHR can be shutdown without exceeding cold shutdown temperature limitations be calculated and must be greater than the estimated time needed for draining accomplishing repairs, refilling, venting and placing the RHR system back in service. This requirement is necessary since RHR system operation must be secured (by procedure) prior to draining the intermediate leg (below mid-loop) due to the higher potential for running the system dry in this configuration. Heatup rate with the system pressurized can be determined by temporarily securing RHR and timing the heatup rate. Time to boil could be calculated from the determined heatup rate.

Level differences in the RCS and their effect upon instrumentation indications are a concern since these will occur by design. A weir arrangement internal to the Reactor Coolant Pumps serves to limit backflow through the pumps should a pump be shutdown during power operation. The weir arrangement serves as a dam when draining the RCS, however a

hole drilled in the weir allows level to equalize with time, thus the drain down procedures caution the operator that the tygon tube level indication will lag the actual level; to prevent false level indications the loops should be drained slowly. Further, because there is no high point vent capability for the steam generator U-tubes, the vacuum created as the RCS is drained will often cause water to be held up in the tubes. Therefore, the draindown procedures caution that once the loops are drained to the desired level (less than full pipe), the operator should anticipate a level increase as the steam generator tubes drain.

Procedural guidance pertinent to the draindown process and operation at mid-loop is contained in the draindown procedures previously discussed. Guidance pertinent to the timing of operations (e.g. initial conditions for draindown, hold points for switching from cold calibrated pressurizer level indication to the tygon tube level indication etc.) are determined based on the spans of each instrument and the draindown level to be achieved. Cautions and critical parameters (e.g. temperature limits for the plant conditions, limiting draindown rates etc.) are addressed in procedures and are based on technical specification and equipment limitations. When draining the intermediate leg with the RV head in place and the the incore thermocouple system is operable, then temperature is monitored manually or trended on computer.

The existence of a communications channel between the containment and the control room is an explicit requirement in both drain down procedures. As noted previously, operations, testing, and maintenance are conducted under the direction of the control operators under the supervision of the Shift Supervisor regardless of plant condition. Control is maintained using work clearances, operating orders and conduct of normal shift turnover practice. Nevertheless, SOP-RCS-13 reiterates, "The Shift Supervisor has ultimate responsibility for the safety of the reactor plant and personnel; during this procedure he is to be fully aware of all operating parameters and the consequences of any changes; all personnel involved in this activity shall be fully aware of their responsibilities and any corrective action that may be required of them."

Response to a loss of RHR is addressed in off normal operating procedure ONOP-RHR-1. Several methods of establishing an alternate means of decay heat removal are described depending upon the particular configuration of the RCS at the time RHR is lost, these include:

<u>RV Head Installed/ RCPs Available/ RCS Closed</u>

In this configuration the operator is instructed to repressurize the RCS by charging to the RCP start pressure, and initiating RCP flow. Feedwater flow to the

steam generators is by auxiliary feedwater or condensate pumps while steaming via atmospheric steam dumps. If secondary side temperature is below saturation or if heat removal by discharging steam is not effective at low pressure, the operator is instructed to bleed and feed the secondary side using a source of feedwater as previously described with blowdown via the steam generator blowdown system or blowdown bypass. The procedures notes that natural circulation (in this configuration - system pressurized) is sufficient to remove heat generated by the core. This phenomena is well known and has been demonstrated in actual practice. With no means of feedwater available, the operator is instructed to provide core cooling by feeding and bleeding the RCS using a charging pump (98 gpm, 2200 psi discharge pressure, positive displacement) or a safety injection pump (400 gpm, 1500 psi discharge pressure, centrifugal) while simultaneously draining from the RCS.

RV Head Installed/ RCPs Unavailable/ RCS Closed
Same as above using natural circulation since forced circulation will not be available without RCPs.

RV Head Installed/ RCPs Unavailable/ RCS Open
The operator is instructed to feed and bleed the RCS as previously described using a charging pump or a safety injection pump while simultaneously draining from the RCS.

RV Head Removed (S/G Manways in Place)

The operator is instructed to fill the refueling cavity using the safety injection pumps so as to obtain a large mass of water above the core and establish cooling by means of the containment fan coolers. The five containment fan coolers are capable of condensing all the heat generated following a design basis loss of coolant accident without exceeding containment design pressure.

Spurious Closure of 730 or 731 While on RHR

When either RHR suction valve leaves its fully open position a visual and audible alarm actuates on the safeguards panel in the control room. Should these valves spuriously close while on RHR a potential overpressure event could ensue as well as the loss of RHR flow. The operator is instructed to maximize letdown, isolate all charging and shutdown any running RHR pumps and reopen the valve(s).

With regard to the potential for effluent release from the containment, following the immediate operator actions, the operator is instructed to establish containment integrity and initiate an alternate means of cooling if RHR cannot be

readily restored to operation and core cooling is necessary.

For any loss of residual heat removal flow that would require implementing off normal operating procedure ONOP-RHR-1, the operator is immediately directed to the Emergency Plan Procedure Document (Table 4.1) for classification of the event. In accordance with Table 4.1 entry into procedure ONOP-RHR-1 requires an "ALERT" classification (complete loss of any function needed for cold shutdown). Under 10 CFR 50.72 declaration of any of the Emergency Classes specified in the emergency plan requires notification of the NRC Operations Center via the Emergency Notification System not later than one hour after the time of declaration. Depending on the details of any particular loss of RHR event, other notification and reporting requirements of 10 CFR 50.72 and 10 CFR 50.73 could be invoked.

Item 6. REQUEST
A brief description of training provided to operators and other affected personnel that is specific to the issue of operation while the RCS is partially filled. We are particularly interested in such areas as maintenance personnel training regarding avoidance of perturbing the NSSS and response to loss of decay heat removal while the RCS is partially filled.

RESPONSE
Tygon hose level indicating system and RCS drain down operations are covered in the Reactor Coolant System Lesson Plan which is presented to licensed and non-licensed operators (NLOs) on a biannual basis. Industry event lessons are taught on a regular basis consistent with the training cycle and operational needs. The IP-3 Training Department plans to cover several INPO event reports on the subject of decay heat removal loss before the end of the 1987 training year. Emphasis in the past on decay heat removal event lessons has been on the significance of the RHR system, the impact on the NSSS of its loss and the need to exercise great care when performing evolutions which could perturb RHR.

The dynamics of operating centrifugal pumps including cavitation and net positive suction head are taught in the Fluid Mechanics Course. In pump operability testing NLOs are informed about the different types of cavitation which include traveling, fixed and vortex cavitation. The NLOs are also instructed on ways to detect cavitation by observation in the field and through instrument indication of pump parameters.

Item 7. REQUEST
Identification of additional resources provided to the operators while the RCS is partially filled, such as assignment of additional personnel with specialized knowledge

involving the phenomena and instrumentation.

RESPONSE
Additional resources are not normally assigned while the RCS is partially filled except in the case of draining the intermediate leg below mid-loop. The shift supervisor directly supervises this evolution and remains continually aware of all operating parameters involved and the consequences of any changes. All personnel involved are made fully aware of their responsibilities in this activity and any corrective actions that may be required. In addition, the tygon hose level system is constantly monitored locally and reported to the control room.

Item 8. REQUEST
Comparison of the requirements implemented while the RCS is partially filled and requirements used in other Mode 5 operations. Some requirements and procedures followed while the RCS is partially filled may not appear in the other modes. An example of such differences is operation with a reduced RHR flow rate to minimize the likelihood of vortexing and air ingestion.

RESPONSE
Basic requirements as dictated by technical specifications remain the same for partial fill as with any other cold shutdown operation in that the operator must maintain cold shutdown conditions. That is, if draining is for refueling, temperature must be less than or equal to 140°F and the reactor is subcritical by at least 10% $\Delta k/k$. If draining for some other maintenance activity then temperature and subcriticality requirements of $\leq$200°F and at least 1% $\Delta k/k$ apply. An exception is that procedurally RCS temperature must be $\leq$ 140°F if draining the intermediate leg below mid-loop.

Additional requirements for draindown operation as previously explained, involve establishing communications with containment, installing the tygon hose level indicating system, maintaining RV level at or above 62'-0", placing CVCS in the low pressure purification mode and frequently monitoring the RHR pumps for cavitation. With regards to reduced RHR flow rate the operator will adjust flow as necessary to maintain required temperatures. Also, if RHR heat exchanger flow is oscillating (an indication of vortexing), the operator, as a matter of practice will throttle the heat exchanger outlet valve to re-establish steady flow conditions.

Additionally, when draining the intermediate leg below 62'-0", heatup of the RCS must be calculated so that enough time is available to complete maintenance activities and restore RHR before cold shutdown requirements are exceeded. This particular draindown evolution also requires an

alternate means of decay heat removal be available, including the RWST as an emergency source of borated makeup water. Operators involved must be more extensively prepared for events which could occur and tygon level must be continuously reported to control.

Item 9. REQUEST
As a result of your consideration of these issues you may have made changes to your current program related to these issues. If such changes have strengthened your ability to operate safely during a partially filled situation, describe those changes and tell when they were made or are scheduled to be made.

RESPONSE
Past changes made to IP-3 procedures are:

1. Requirement to calculate time to heatup above 200°F prior to draining intermediate leg and to insure that associated maintenance activities can be completed with core cooling restored prior to exceeding cold shutdown conditions.

2. If RV head is installed and core exit thermocouples are available, core temperature must be continually monitored when draining the intermediate leg.

3. Addition of spurious closure actions for RHR suction valves to the loss of RHR procedure.

As a result of the initial review performed the Authority is evaluating the following considerations to strengthen plant staff ability to operate safely during a partially filled situation:

1. Revise ONOP-RHR-1, Loss of Residual Heat Removal Flow, to:

   a. Explicitly address operator actions for recovery from erratic flow and loss of flow during mid-loop operations.

   b. Revise the operator immediate actions to require a determination of the reason for pump trip prior to starting the second RHR pump.

   c. Define an alternate decay heat removal path in the event RHR is lost in a partially drained condition and cannot be readily restored. In this case steam generators cannot be relied upon and decay heat removal is established through letdown from the pressurizer to the PRT through an open PRT rupture disk to the recirculation sump. The recirculation pumps are then aligned to inject coolant through RHR heat exchangers back to the cold legs to better facilitate decay heat removal.

2. Revise the draindown procedures to:

   a. Specify a normal operating band of RCS level for the mid-loop condition and the basis of the level limits.

   b. Specify the frequency of monitoring the tygon level when actively draining the RCS.

   c. Caution the operator to observe the operating RHR pump locally for abnormal noise, monitor local RHR pump discharge pressure, local RCS level indication and RHR flow indication during draining evolutions.

   d. Cross reference to ONOP-RHR-1.

3. Establish an average end-of-cycle decay heat load curve versus time subsequent to shutdown as an operator guide. Proposed WOG study previously discussed would form the basis for this effort.

ATTACHMENT II TO IPN-87-043

FIGURES RELATED TO RESPONSE TO GENERIC LETTER 87-12

(Extracted from Training Guideline Sketches)

NEW YORK POWER AUTHORITY
INDIAN POINT 3 NUCLEAR POWER PLANT
DOCKET NO. 50-286
DPR-64

Figure 1

RCS GENERAL ARRANGEMENT

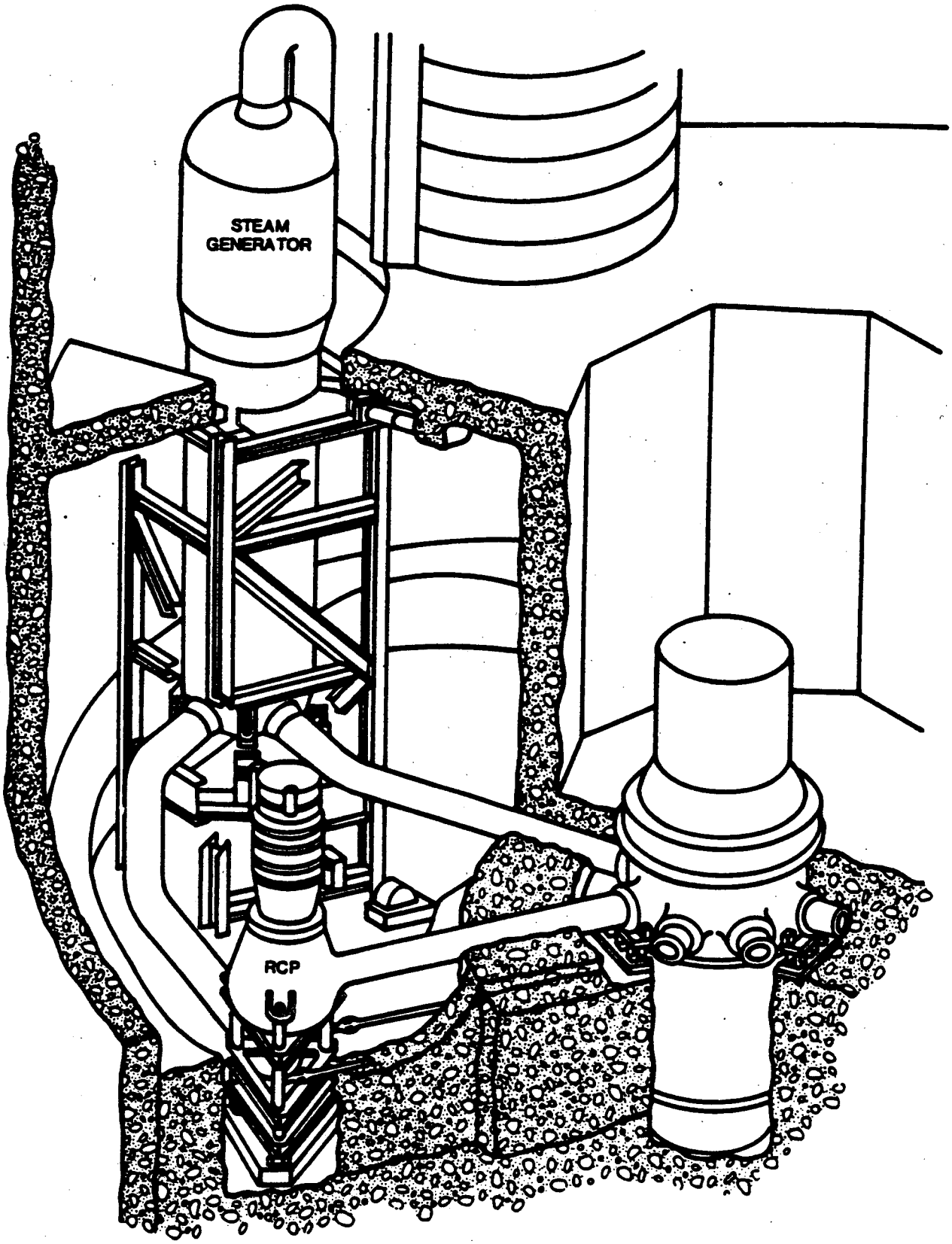

Figure 2

GENERAL SCHEMATIC OF THE RCS

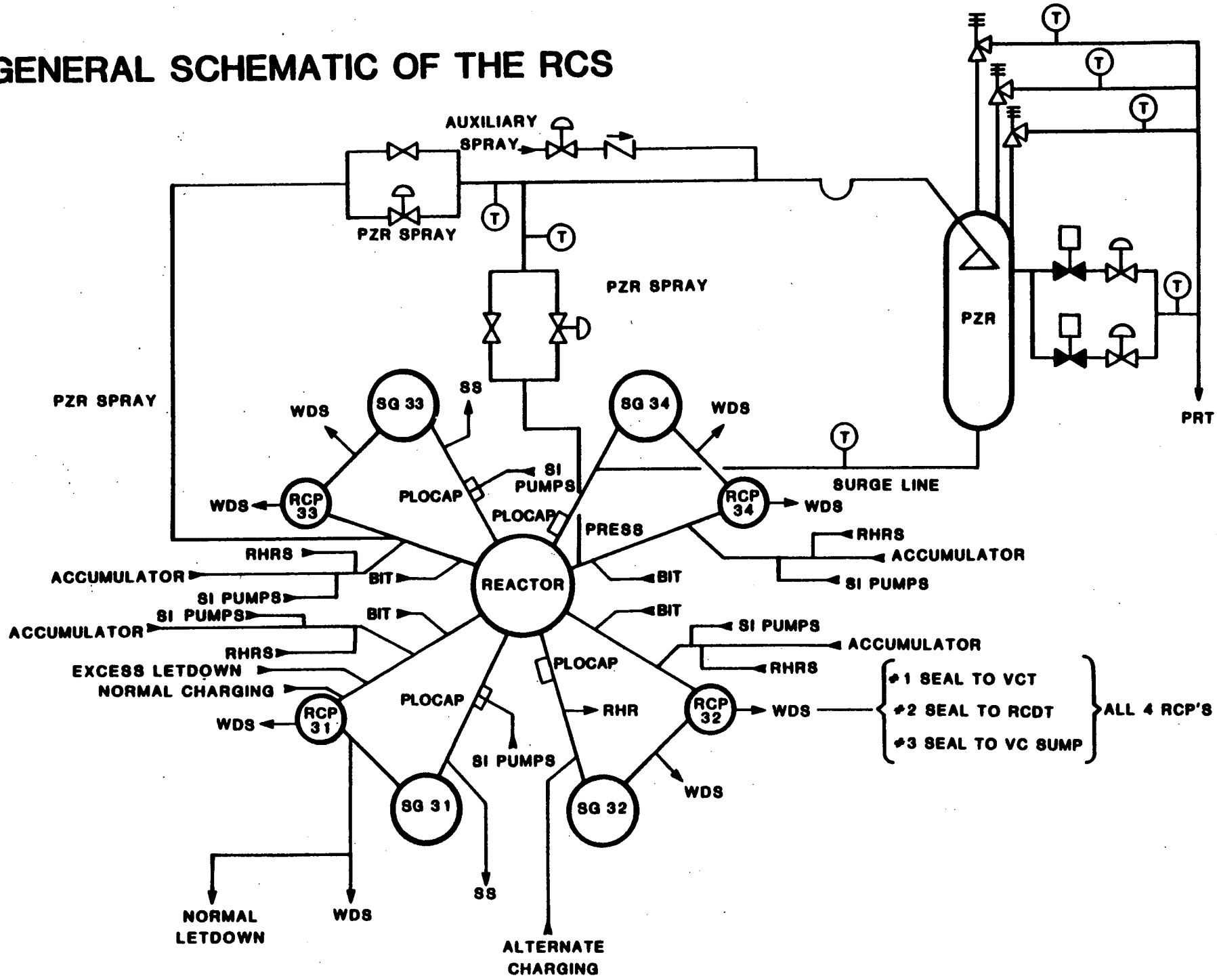

Figure 3

CHEMICAL AND VOLUME CONTROL SYSTEM

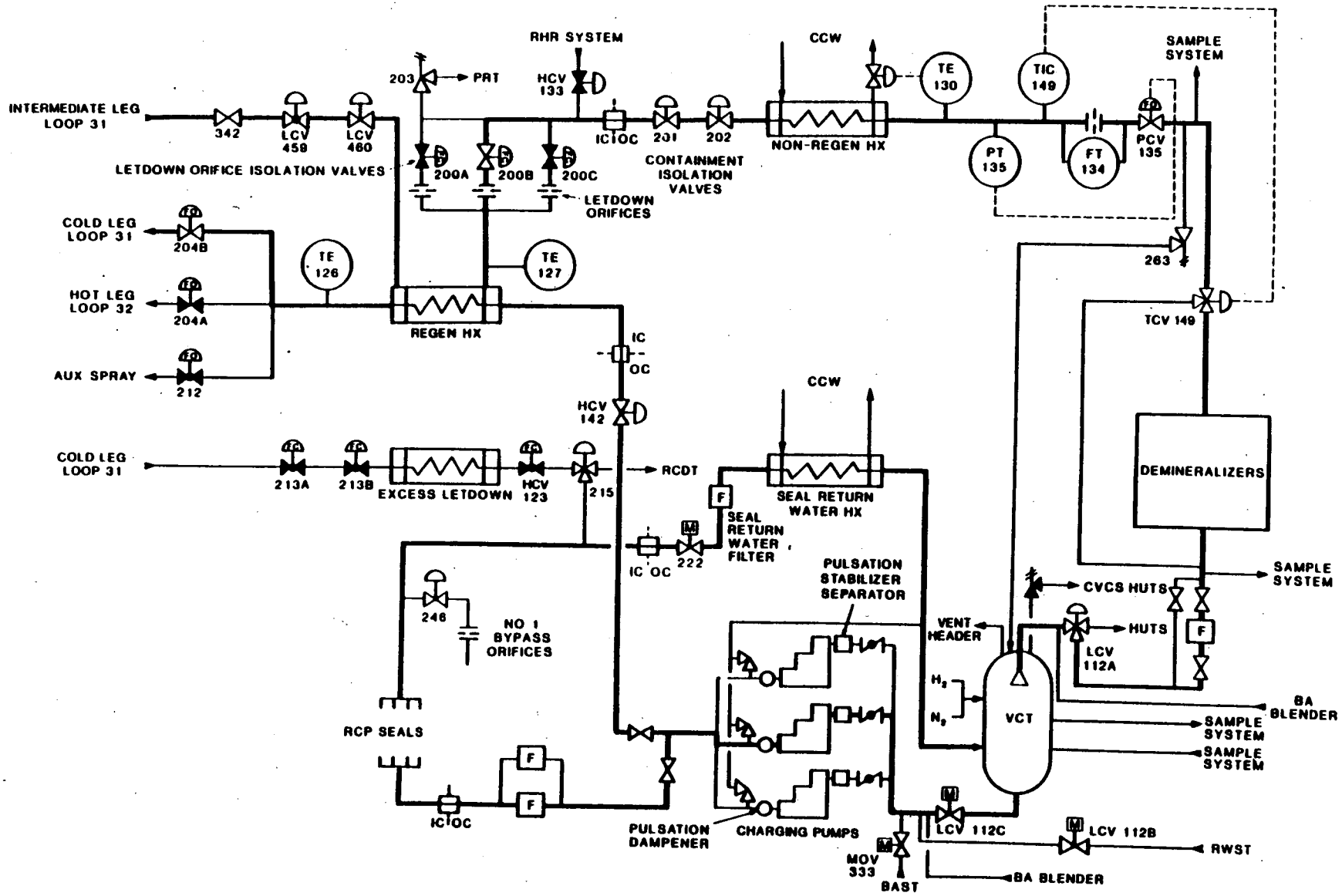

Figure 4

RCS LEVEL INDICATOR

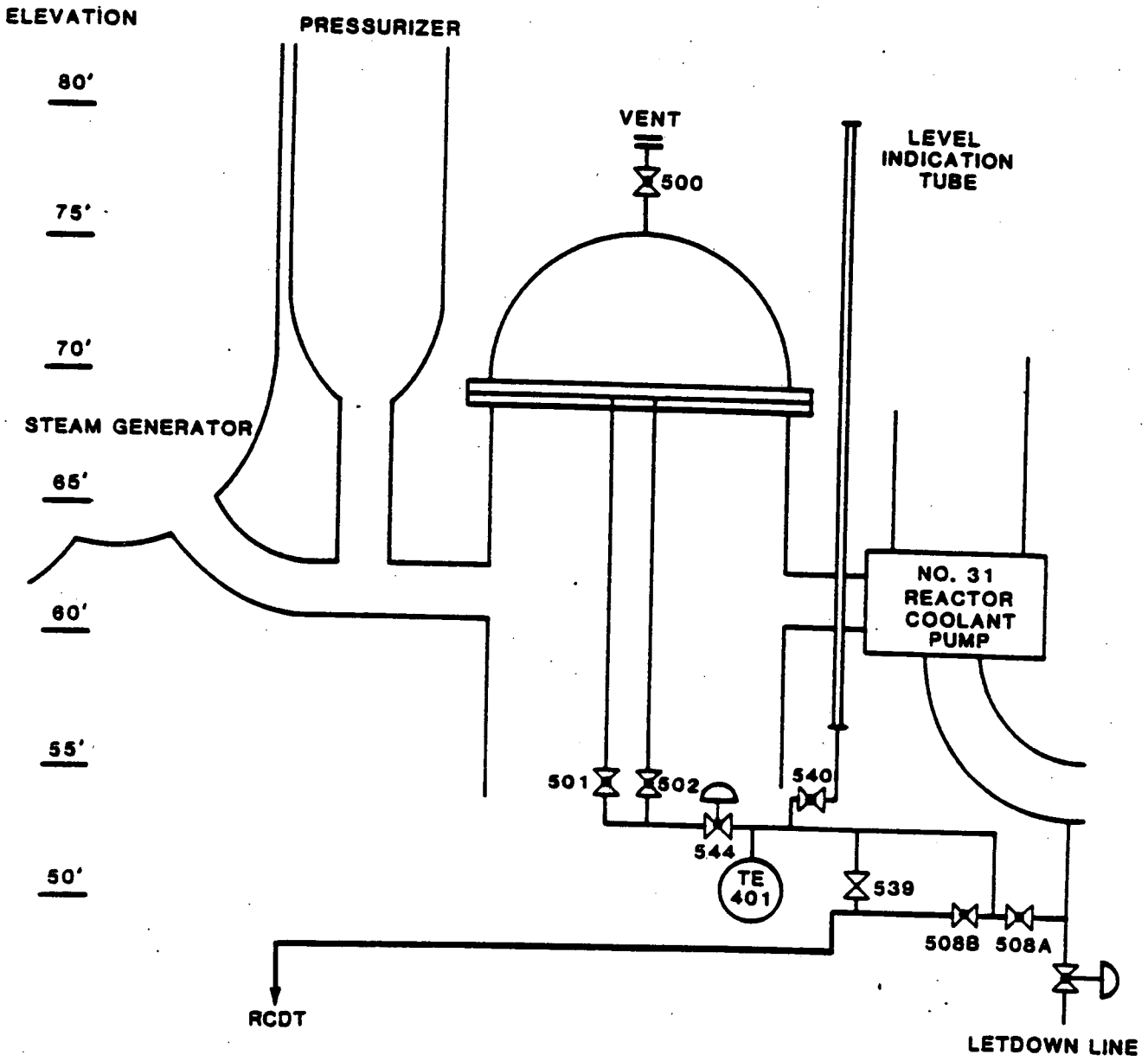

NOTE: NOT TO SCALE.
ELEVATIONS APPROX. CORRECT.

Figure 5
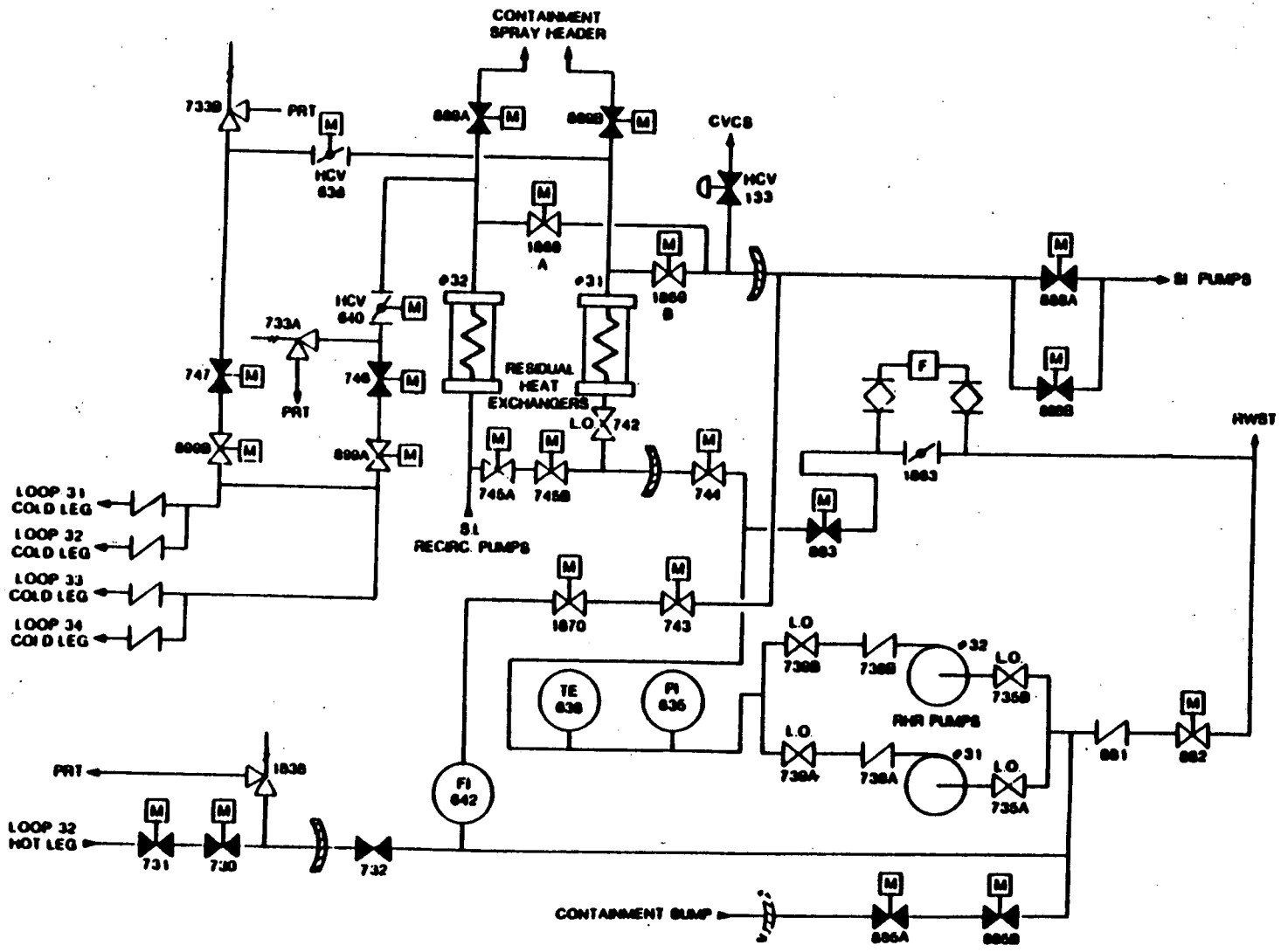
RESIDUAL HEAT REMOVAL SYSTEM