Indian Point Unit Three
Inservice Inspection Test Program

Weld and Pipe Supports

Revision 1 Date 8/80	Approval--Karl Jacobs KJ
Revision Record Weld and Pipe Supports' Program has been revised in regard to the NRC Inservice Testing Meeting at Indian Point Unit 3 as of 4/1/80 and 4/2/80.	
Revision 2 Date 9/83	Approved K.N. Jacobs
Revision Record Weld and Pipe Supports' Program has been revised to include comments from the NRC Safety Evaluation Report and previous NRC letter commitments and correct typos.	
Revision Date	Approval
Revision Record	

8309220020 830915
PDR ADOCK 05000286
Q PDR

INDIAN POINT UNIT 3

INSERVICE INSPECTION (ISI)

PROGRAM FOR WELDS & SUPPORTS

Page	Rev. 1	Rev. 2	Rev. 3	Rev. 4	Rev. 5
1					
2					
3	A	C			
4	L	D			
5	L	I, F			
6		D, H, I			
7	P	E, H			
8	A	E			
9	G	D, G			
10	E				
11	S	I			
12		B			
13	R				
14	E				
15	T				
16	Y	B			
17	P				
18	E				
19	D	E			
20					
21					
22					
23					
24					
25					

INDIAN POINT UNIT 3

IN SERVICE INSPECTION (ISI)

PROGRAM FOR WELDS & SUPPORTS

Page	Rev. 1	Rev. 2	Rev. 3	Rev. 4	Rev. 5
26					
27	ALL				
28		B			
29	PAGES				
30					
31					
32		A			
33	RETYPED	A			
34		A			
35		A			
36		A			
37		A			
38		A			
39		J			

REVISION LEGEND:

A = Revised to include expanded Class 3 Components

B = Revised to correct typographical errors

C = Revised to reflect latest drawing revision numbers

D = Revised to include inadvertent omission during retyping of Rev. 0

E = Revised per PASNY 6/30/81 letter to NRC

F = Revised to correct wrong check valve suffixes

G = Was agreed to with NRC during 4/1/81 meeting

H = Revised to be consistent with the previous Authority's relief request on using the 1977 ASME Section XI Edition through the 1978 Summer Addenda for examining B-J, C-F and C-G category welds

I = Revised in accordance with NRC Safety Evaluation Report.

J = Revised to include additional relief requests for Class 3 components.

SAFETY RELATED SYSTEMS

INDIAN POINT UNIT #3

LIST OF INSERVICE INSPECTION PROGRAM DRAWINGS
WELD AND SUPPORT PROGRAM

9321-F-20173	- 21	Main Steam	1C
9321-F-20183-17	-	Condensate Boiler & Feed Pump Suction	
9321-F-20193-17	-	Boiler Feedwater	
9321-F-27203-12	-	Auxiliary Coolant Sheet #1	
9321-F-27223	- 21	Service Water	1C
9321-F-27243-14	-	Primary Make-up Water for NSSS	
9321-F-27273-10	-	Auxiliary Steam & Condensate	
9321-F-27303-11	-	Waste Disposal Sheet #2	
9321-F-27353-14	-	Safety Injection Sheet #1	1C
9321-F-27383-14	-	Reactor Coolant Sheet #1	
9321-F-27453	- 9	Sampling	1C
9321-F-27473-16	-	Reactor Coolant Sheet #2	1C
9321-F-27503	- 11	Safety Injection Sheet #2	1C
9321-F-27513-16	-	Auxiliary Coolant Sheet #2	
9321-F-27293-10	-	Steam Generator Blowdown System	
9321-F-27363-15	-	Chemical & Volume Control Sheet #1	
9321-F-27373-14	-	Chemical & Volume Control Sheet #2	

POWER AUTHORITY OF THE STATE OF NEW YORK

INDIAN POINT UNIT 3

SECOND 40-MONTH PERIOD OF FIRST 10-YEAR INTERVAL

The attached tables provide a listing of the Class 1, 2 and 3 pressure-retaining components (and their supports) which are subject to the inspection requirements of Subsections IWB, IWC and IWD of Section XI of the ASME Boiler and Pressure Vessel Code, 1974 Edition, and Addenda through Summer, 1975.

These tabulations identify the components to be inspected, the components safety class, the applicable code to which the component was built, and the method of examination. Relief from the inspection requirements of each Subsection is requested in cases where these inspection requirements have been provided which identifies the applicable code requirement, justification for the relief request, and the inspection method to be used as an alternative.

The following provide further clarification concerning the Class 1, 2 and 3 system inspection programs.

(a) Articles IWC-3000 and IWD-3000 entitled, "Evaluation of Examination Results" are in the course of preparation by the Code Committee and, as yet, are not available for use. Standards for examination evaluations as included in the 1974 Edition of Section XI with Addenda through the Summer, 1975, are incomplete and "Acceptance Standards for Flaw Indications" as given in Article IWB-3000 of the 1977 Edition through the 1978 Summer Addenda of Section XI will be utilized.

(b) Articles IWC-4000 and IWD-4000 entitled, "Repair Procedures" state that the rules of IWB-4000 shall apply. When the repair procedures outlined in IWB-4000 are not applicable for the Class 2 and 3 components in this program, the rules of IWA-4000 will be applied.

(c) Requirements for the visual examination of Class 1 systems and components for evidence of leakage during the performance of a system pressure test following each refueling are identified by IWB-5200. Exception is taken to the implementation of these requirements on those portions of Class 1 system which are contained between two check valves or two normally closed valves, where pressure applied to the reactor coolant system will be retained at the first valve in the line. The portions of systems affected by this limitation are:

(I) Cold leg injection from accumulators between check valves 897A, B, C and D and 895A, B, C and D, RHR return and low head injection lines to valves 838A, B, C and D and high head injection lines to valves 857A, Q, S and U. During normal operation these portions of the systems are filled and pressurized to the normal accumulator operating pressure of 620 to 665 psig. IP-3 Technical Specification limiting conditions does not allow the accumulator to exceed 700 psig when the reactor coolant system is above 350° F and 1000 psig. Pressurizing the accumulator and this associated lines to 1.1 times operating pressure will exceed our Technical Specification requirements. An alternate visual examination will be performed for leakage during normal operating pressure when the reactor coolant system pressure test is performed. I

(II) Hot leg injection between check valves 857B and H, and check valves 857N and P. These portions of the systems are filled and vented but not pressurized during normal operation. F

(III) Cold leg boron injection line between check valves 857C, D, E and F and check valves 857J, K, L and M.

(IV) RHR take off line between normally closed (with pressure interlock) valves 730 and 731. This portion of the system will be pressurized whenever the system is put into operation during plant shutdown when the reactor coolant system is cooled to 350°F and depressurized to 450 psig. These valves are interlocked to automatically isolate when the reactor coolant system pressure exceeds 600 psig.

(d) Subsections IWB and IWC contain differing requirements for the hydrostatic testing of Class 1 and Class 2 systems and components. The implementation of these requirements is impractical when the only means of pressurizing the Class 2 system is through the Class 1 system or when the boundary between the two systems is a check valve arranged flow from Class 2 to the Class 1 system. Exception is taken to the performance of the hydrostatic test requirements as required by Article IWC-2412(a) on those portions of the Class 2 systems identified below. Visual examination for evidence of leakage will be conducted on these portions of the systems at the system nominal operating pressure in accordance with the requirements of IWB-5221 for the adjoining Class 1 system.

(I) Pressurizer steam space sampling line from valve 950 to valve 956A, pressurizer liquid space sampling line from valve 952 to valve 956C and loop sampling lines to valve 956E.

(II) R.C. Pump seal bypass lines from the flow orifice to manual valve 258A, B, C and D.

(III) R.C. Pump seal leak off line to manually operated valves 261A, B, C and D and 259A, B, C and D.

(IV) R.C. Pump seal injection line from check valve 251J, K, L and M to manually operated valve 250A, B, C and D.

(V) Excess letdown system from valve 213B to HCV 123.

(VI) Letdown line from valve LCV 460 to orifice outlet valves 200A, B and C.

D

Relief is requested from paragraph IWC-5220(a) requirements of 1.25 times the system design pressure for the four steam generator shells and associated feedwater piping which are not isolatable from performing the hydrostatic test. All piping that is non-isolatable for the hydrostatic test is identified on drawing attachments A and B. In lieu of performing 1.25 times the system design pressure the requirement of 1.1 times the operating pressure will be performed. This pressure test requirement has been previously approved by the NRC.

I

(e) The examination requirements for Class 3 systems and components as given in the attached tabulation are in accordance with IWD-2410(c) which specifies that 100 percent of the components be examined as required by IWD-5240 and IWD-2600 either during normal operation or during system inservice testing. An additional requirement of IWD-2410(b) is for the examination of Class 3 systems and components for evidence of leakage during the performance of a system pressure test in accordance with IWD-5000. The Code does not stipulate that certain amounts of these examination requirements be completed within each 40-month period such that the system pressure test requirements may be deferred until the end of the ten-year inspection interval.

(f) Ultrasonic examinations will be conducted in accordance with the provisions of Appendix 1 and Article 5 of Section V as required by paragraph IWA-2232.

As an alternative to using Article 5 of Section V, Appendix III of Section XI of the 1977 Edition and including Addenda through the Summer, 1978 of the ASME Boiler and Pressure Vessel Code shall be used for the ultrasonic examination of Class 1 and Class 2 piping welds.

H

The extent and frequency of examination of Class 1 and 2 piping system welds will be as required by Table IWB-2500 Category B-J and Table IWC-2520 Categories C-F and C-G. However, examination requirements and examination methods for piping system welds will be defined in Tables IWB-2500-1 Category B-J and IWC-2500-1 Category C-F of the 1977 Edition of Section XI Summer 1978 Addenda. The acceptance criteria for piping welds shall be as expressed in Article IWB-3000 of the 1977 Edition through Summer, 1978 Addenda of Section XI- (as expressed in section (a) above). The recording of indications shall be as follows:

(I) Indications which equal or exceed 50% of the reference level (DAC) shall be recorded. The recording of indications arising from geometric origin may be limited to the maximum signal amplitude and length of the reflector.

(II) "Any non-geometric indication, equaling or exceeding 20% of the reference amplitude (DAC) shall be investigated by an examiner certified to at least Level II to the extend necessary to determine the shape, identity, and location of the reflector."

(III) Any indication which is investigated and evaluated as a crack or fusion defect shall be deemed unacceptable and recorded as such, regardless of signal amplitude or length.

This substitution should be considered acceptable under the provisions of paragraph IWA-2240.

(g) As an alternative for I-3121 of Section XI: "Calibration blocks required for the examination of welds in ferritic vessels 2½ inches thick and over will be fabricated from material of the same specification, product form, and heat treatment as one of the materials being joined as allowed by Article T-434.1 in the Winter, 1976 Addenda of Section V of the ASME Boiler and Pressure Vessel Code."

The reason this alternative is requested is that the Code requires that calibration blocks for the examination of welds in ferritic vessels 2½ inches thick or greater be fabricated from material taken from the component nozzle drop out or material from the component, the block may be fabricated from a material of a specification included in the applicable examination volumes of the component. It is required that the

acoustic velocity and attenuation of such a block be demonstrated to fall within the range of straight beam longitudinal wave velocity and attenuation found in the unclad components.

For the components in the Indian Point Unit 3 Plant, particularly the pressurizer and steam generators, it will be impossible to meet the requirements of alternative 1 or 2. Materials of the specification are clad on the inner surfaces, it would be impossible to obtain a comparison of sound beam velocities and attenuations in the unclad component.

Table IWB-2600 contains requirements for the examination of vessel cladding on the reactor vessel closure head (Item B1.13), the reactor vessel (Item B1.14), the pressurizer (Item B2.9) and the steam generator primary side (Item B3.8). Volumetric examinations performed on each of these vessels for the inspection of welds will detect defects which may originate in the clad material and extend into the base material far more readily than visual examinations of the clad surface. As this examination requirement is deleted by later editions of the code, exception is taken to the performance of these examinations.

Limitations may occur for the examination of piping system circumferential butt welds (Category B-J) when the welds occur at geometric discontinuities such as pipe-to-vessel welds, pipe-to-fitting welds or fitting-to-fitting welds. For pipe-to-fitting or pipe-to-vessel nozzle welds, examinations will be performed to the maximum extent practicable from the weld and pipe surfaces. Examination from the fitting side would be dependent upon the geometric configuration. Where elbows or tees are concerned, examination can be performed from the fitting side except where the intrados of the fitting prevents adequate ultrasonic coupling. No examinations can be performed from the fitting side when it is a valve of flange. In all cases, 100% of the weld material can be examined. In instances where welds occur at fitting to fitting, access restrictions as outlined above occur on both sides of the weld. In instances where ultrasonic examinations cannot be performed on 100% of the volume of the weld and heat affected zone, surface examinations will be performed to supplement the limited volumetric examination.

Welds in the Indian Point Unit 3, Class 1 system which, due to limitations, would require surface examinations are:

(I) Loop 31 Accumulator discharge line; Weld #2
(II) Loop 31 Letdown line; welds #4, 5, 8, 9, 12 and 13
(III) Loop 32 Accumulator discharge line; welds #2 and 3
(IV) Loop 32 RTD Return Line; welds #1 and 2
(V) Loop 33 Accumulator discharge line; welds #4 and 5
(VI) Loop 33 RTD Return line; welds #1 and 2
(VII) Loop 34 Accumulator discharge line; weld #3
(VIII) Loop 34 RTD Return line; welds #1 and 2
(IX) Pressurizer Spray line; weld #1
(X) Pressurizer safety valve lines; welds #5, 8, 9, 14, 17, 18 23, 26 and 27
(XI) Pressurizer relief lines; welds #6, 7, 8 and 15
(XII) Charging line; welds #1 and 8

In instances where the locations of pipe supports or hangers restrict the access available for these examinations, they will be performed to the extent practical unless removal of the support is permissible without unduly stressing the system.

Certain Class 2 systems or portions of Class 2 systems and components are exempt from the examination requirements of the IWC-2520 by IWC-1220. A summary of these exemptions as applicable to the Indian Point plant systems are as follows:

(I) The boron injection tank discharge piping is all equal to or less than 4-inch nominal diameter.

(II) The high head SIS piping equal to or less than 4-inch nominal diameter is exempted by IWC-1220(d).

(III) The containment spray system and recirculation spray systems do not function during normal reactor operation and exempted by IWC-1220(b).

(IV) The RWST and associated piping have design pressures and temperatures less than 275 psig and 200°F and are exempt by IWC-1220(a).

Chemical Volume & Control System (CVCS)

There is no credit taken for the CVCS system with regard to safety in the Indian Point Unit 3 Final Safety Analysis Report. Although the CVCS system is not considered essential to safety in accordance with General Design Criteria #1 of 10CFR50, specific portions of this system will be examined to ASME Section XI. This is done to satisfy a request of the Nuclear Regulatory Commission ISI reviewing staff to examine the CVCS. This request was made based on NRC's April 1-2 review of the ISI program and a conference call with the NRC reviewing staff on October 2, 1980. During this call, it was agreed that the scope of this inspection would be limited to visual and/or surface examination of selected portions of the CVCS.

The inservice inspection programs outlined in the attached tabulations have been developed as a result of a design review. Should certain ASME Section XI Code requirements be discovered to be impractical due to unforeseen reasons during the process of performing inspections or tests, relief will be requested from the specific Section XI Code requirement at that time.

Radiation levels in certain areas or of certain components may be found to prohibit the access for operators or inspectors to perform the inspections or tests described in this program. If source strengths cannot be reduced and access is still restricted by considerations of compliance with the requirements of Regulatory Guides 8.8 and 8.10, relief will be requested from the specific Section XI Code requirements and alternative examination or test requirements be proposed.

Codes referenced as being applicable to construction of components in the attached tables are:

IIIA	ASME Boiler and Pressure Vessel Code, Section III, Class A Nuclear Vessels
IIIC	ASME Boiler and Pressure Vessel Code, Section III, Class C Nuclear Vessels
VIII	ASME Boiler and Pressure Vessel Code, Section VIII, Pressure Vessels
B 31.1	USA Standard USAS B 31.1 Code for Pressure Piping
B 16.5	USA Standard USAS B 16.5 Steel Pipe Flanges, Flanged Valves and Fittings.

INDIAN POINT UNIT NO. 3 NUCLEAR POWER PLANT
INSERVICE INSPECTION
ASME CODE CLASS 1 COMPONENTS

TABLE IWB-2600 ITEM NO.	TABLE IWB-2500 EXAMINATION CATEGORY	SYSTEM OR COMPONENT	CODE APPLICABLE TO CONSTRUCTION	AREA TO BE EXAMINED	EXAMINATION REQUIREMENT	SECTION XI CODE RELIEF REQUESTED
B1.1	B-A	Reactor Vessel	III A	Lower Shell to intermediate shell circumferential weld.	Volumetric	NO
B1.1	B-A	RCPCR-VI		Intermediate shell course longitudinal welds (3).	Volumetric	NO
B1.1	B-A			Lower shell course longitudinal welds (3).	Volumetric	NO
B1.1	B-A			Upper shell to intermediate shell circumferential weld.	Volumetric	NO
B1.2	B-B			Lower head to shell weld.	Volumetric	NO
B1.2	B-B			Upper shell course longitudinal welds (3).	Volumetric	NO
B1.2	B-B			Lower head peel segment meridional welds (6).	Volumetric	NO- Note 1 I
B1.2	B-B			Lower head disc to peel segment circumferential weld.	Volumetric	NO - Note 1 I
B1.2	B-B			Closure head disc to peel segment circumferential weld.	Volumetric	Yes - Note 2
B1.2	B-B			Closure head peel segment meridional welds (6).	Volumetric	NO
B1.3	B-C			Vessel to flange weld	Volumetric	NO
B1.3	B-C			Closure head to flange weld	Volumetric	NO

INDIAN POINT UNIT NO. 3 NUCLEAR POWER PLANT
INSERVICE INSPECTION
ASME CODE CLASS 1 COMPONENTS

TABLE IWB-2600 ITEM NO.	TABLE IWB-2500 EXAMINATION CATEGORY	SYSTEM OR COMPONENT	CODE APPLICABLE TO CONSTRUCTION	AREA TO BE EXAMINED	EXAMINATION REQUIREMENT	SECTION XI CODE RELIEF REQUESTED
B1.4	B-D			Outlet nozzle to vessel welds (4).	Volumetric	NO
B1.4	B-D			Inlet nozzle to vessel welds (4).	Volumetric	NO
B1.5	B-E			Vessel penetrations including control rod drive penetrations and control rod housing pressure boundary welds.	Visual	NO
B1.6	B-F			Outlet nozzles to safe-end welds (4).	Volumetric, Surface & Visual	Yes - Note 3 B
B1.6	B-F			Inlet nozzles to safe-end welds (4).	Volumetric, Surface & Visual	Yes - Note 3
B1.7	B-G-1			Closure Head Studs (in place)	Not Applicable	No - Note 4
B1.8	B-G-1			Closure Head Studs & Nuts	Volumetric & Surface	NO
B1.9	B-G-1			Vessel flange ligaments	Volumetric	NO
B1.10	B-G-1			Closure head washers	Visual	NO
B1.11	B-G-2			Conoseal Bolting	Visual	NO
B1.12	B-H			Integrally welded vessel supports	Not Applicable	No - Note 5
B1.13	B-I-1			Closure Head Cladding	Surface & Visual or Volumetric	No - Note 6

INDIAN POINT UNIT NO. 3 NUCLEAR POWER PLANT
INSERVICE INSPECTION
ASME CODE CLASS 1 COMPONENTS

TABLE IWB-2600 ITEM NO.	TABLE IWB-2500 EXAMINATION CATEGORY	SYSTEM OR COMPONENT	CODE APPLICABLE TO CONSTRUCTION	AREA TO BE EXAMINED	EXAMINATION REQUIREMENT	SECTION XI CODE RELIEF REQUESTED
B1.14	B-I-1			Vessel Cladding	Visual	NO
B1.15	B-N-1			Vessel Interior Surfaces and Internals	Visual	NO
B1.16	B-N-2			Interior attachments and Core Support Structures	Not Applicable	No - Note 7
B1.17	B-N-3			Core Support Structures	Visual	NO
B1.18	B-O			Control Rod Drive Housings	Volumetric	NO
B1.19	B-P			Exempted Components	Visual	NO
B2.1	B-B	Pressurizer	III A	Longitudinal Shell welds (8)	Volumetric	Yes - Note 8
B2.1	B-B			Circumferential Shell welds (9)	Volumetric	Yes - Note 8
B2.2	B-D			Nozzle to vessel welds (6)	Not Applicable	No - Note 9
B2.3	B-E			Heater Penetrations	Visual	NO
B2.4	B-F			Nozzle to safe-end welds (6)	Volumetric & Surface	NO
B2.5	B-G-1			Pressure Retaining Bolting (in place)	Not Applicable	No - Note 10
B2.6	B-G-1			Pressure Retaining Bolting (when removed)	Not Applicable	No - Note 10
B2.7	B-G-1			Pressure Retaining Bolting	Not Applicable	No - Note 10
B2.8	B-H			Integrally Welded Vessel Supports	Volumetric	NO
B2.9	B-I-2			Vessel Cladding	Visual	NO

INDIAN POINT UNIT NO. 3 NUCLEAR POWER PLANT
INSERVICE INSPECTION
ASME CODE CLASS 1 COMPONENTS

TABLE IWB-2600 ITEM NO.	TABLE IWB-2500 EXAMINATION CATEGORY	SYSTEM OR COMPONENT	CODE APPLICABLE TO CONSTRUCTION	AREA TO BE EXAMINED	EXAMINATION REQUIREMENT	SECTION XI CODE RELIEF REQUESTED
B2.10	B-P			Exempted components	Visual	NO
B2.11	B-G-2			Manway Bolting	Visual	NO
B3.1	B-B	Steam Generators (4) (Primary Side)	IIIA	Channel Head to tubesheet weld (4)	Volumetric	NO
B3.2	B-D	RCPCSG-31 RCPCSG-32 RCPCSG-33 RCPCSG-34		Nozzle to vessel welds (8)	Not Applicable	No - Note 11
B3.3	B-F	RCPCSG-34		Nozzle to safe-end welds (8)	Volumetric & Surface	Yes - Note 12
B3.4	B-G-1			Pressure Retaining Bolting (in place)	Not Applicable	No - Note 10
B3.5	B-G-1			Pressure Retaining Bolting (when removed)	Not Applicable	No - Note 10
B3.6	B-G-1			Pressure Retaining Bolting	Not Applicable	No - Note
B3.7	B-H			Integrally welded supports	Not Applicable	No - Note 10
B3.8	B-I-2			Vessel Cladding	Visual	NO
B3.9	B-P			Exempted Components	Visual	NO
B3.10	B-G-2			Manway Bolting	Visual	NO
B4.1	B-F	Piping Pressure Boundary	B31.1	Safe-end to pipe welds	Volumetric & Surface	Yes - Note 20

INDIAN POINT UNIT NO. 3 NUCLEAR POWER PLANT
INSERVICE INSPECTION
ASME CODE CLASS 1 COMPONENTS

TABLE IWB-2600 ITEM NO.	TABLE IWB-2500 EXAMINATION CATEGORY	SYSTEM OR COMPONENT	CODE APPLICABLE TO CONSTRUCTION	AREA TO BE EXAMINED	EXAMINATION REQUIREMENT	SECTION XI CODE RELIEF REQUESTED
B4.2	B-G-1			Pressure Retaining Bolting (in place)	Not Applicable	No - Note 10
B4.3	B-G-1			Pressure Retaining Bolting (when removed)	Not Applicable	No - Note 10
B4.4	B-G-1			Pressure Retaining Bolting	Not Applicable	No - Note 1[illegible]
B4.5	B-J			Circumferential and Longitudinal Pipe welds (greater diameter than 4 inches)	Volumetric & Surface	Yes - Note 13 & 14
B4.5	B-J			Circumferential and Longitudinal Pipe welds (4 inches and less diameter)	Surface	
B4.6	B-J			Branch pipe connection welds exceeding 6" diameter	Volumetric	Yes - Note 15
B4.7	B-J			Branch pipe connection welds 6" diameter and smaller	Surface	NO
B4.8	B-J			Socket welds	Surface	NO
B4.9	B-K-1			Integrally Welded Supports	Volumetric	Yes - Note 1[illegible]
B4.10	B-K-2			Support components	Visual	NO
B4.11	B-P			Exempted components	Visual	NO
B4.12	B-G-2			Pressure Retaining Bolting	Visual	NO
B5.1	B-G-1	Reactor Coolant Pumps (4)	IIIA	Main Flange Bolting in Place	Volumetric	NO

INDIAN POINT UNIT NO. 3 NUCLEAR POWER PLANT
INSERVICE INSPECTION
ASME CODE CLASS 1 COMPONENTS

TABLE IWB-2600 ITEM NO.	TABLE IWB-2500 EXAMINATION CATEGORY	SYSTEM OR COMPONENT	CODE APPLICABLE TO CONSTRUCTION	AREA TO BE EXAMINED	EXAMINATION REQUIREMENT	SECTION XI CODE RELIEF REQUESTED
B5.2	B-G-1	RCPCP1-31 RCPCP1-32 RCPCP1-33 RCPCP1-34		Main Flange Bolting when removed	Volumetric & Surface	No - Note 17
B5.3	B-G-1			Main Flange Bolting	Visual	NO
B5.4	B-K-1			Integrally welded supports	Volumetric	Yes - Note 18
B5.5	B-K-2			Support Components	Visual	NO
B5.6	B-L-1			Pump Casing Weld	Volumetric	No - Note 19
B5.7	B-L-2			Pump Casings	Visual	NO
B5.8	B-P			Exempted Components	Visual	NO
B5.9	B-G-1			Seal Housing Bolting	Visual	NO
B6.1	B-G-1	Valve Pressure Boundary	B31.1 B16.5 VIII III A	Pressure Retaining Bolting (in place)	Not Applicable	No - Note 10
B6.2	B-G-1			Pressure Retaining Bolting (when removed)	Not Applicable	No - Note 10
B6.3	B-G-1			Pressure Retaining Bolting	Not Applicable	No - Note 10
B6.4	B-K-1			Integrally Welded Supports	Not Applicable	No - Note 10
B6.5	B-K-2			Support Components	Not Applicable	No - Note 10
B6.6	B-M-1			Valve Body Welds	Not Applicable	No - Note 10

INDIAN POINT UNIT NO. 3 NUCLEAR POWER PLANT
INSERVICE INSPECTION
ASME CODE CLASS 1 COMPONENTS

TABLE IWB-2600 ITEM NO.	TABLE IWB-2500 EXAMINATION CATEGORY	SYSTEM OR COMPONENT	CODE APPLICABLE TO CONSTRUCTION	AREA TO BE EXAMINED	EXAMINATION REQUIREMENT	SECTION XI CODE RELIEF REQUESTED
B6.7	B-M-2			Valve Bodies	Visual	NO
B6.8	B-P			Exempted Components	Visual	NO
B6.9	B-G-2			Pressure Retaining Bolting	Visual	NO
		Reactor Coolant Pumps (4) RCPCP1-31 RCPCP1-32 RCPCP1-33 RCPCP1-34		Flywheels	Volumetric & Visual	NO

ASME CODE CLASS 1 COMPONENTS

NOTES

1. The examination of these welds as required by IWB-2600 from inside the vessel is required by the locations of the adjacent incore instrumentation penetrations. Examination of those areas assessible between the penetrations and conduits may be performed from the outside surface to the extent practical due to radiation levels. Examinations will not be performed if the examiners must receive a whole body dose in excess of 1250 mrem in order to complete any one examination. Examinations will be performed on five percent or ten percent of the total length of each weld as required by the Code. Examination of these welds will be performed at or near the end of the ten-year interval as allowed by the Code.

2. The closure head disc to peel segment weld is completely enclosed within the pattern of CRDM penetrations inside the shroud and is not accessible for examination as required by IWB-2600. This area will be subject to visual examination for evidence of leakage during the performance of system hydrostatic tests.

3. Limited access to the O.D. of these welds is provided by removalbe plugs in the primary shield above the nozzles and removable insulation covering the nozzle welds. Exception is taken to performing a surface examination on these welds due to anticipated radiation levels and physical access.

4. The Reactor Vessel Closure head studs are removed during each refueling and there will be none in place for examination as required by IWB-2600.

5. The reactor vessel is supported in pads, integral with the inlet and outlet nozzles and therefore are excluded from examination requirements of IWB-2500 by category B-H.

6. Radiation levels beneath the closure head may affect the allowable exposure dosage of personnel doing surface and visual examinations. The presence of the cladding material is not considered when performing the stress analysis of the Vessel such that failure of the cladding would not affect the integrity of the vessel. The closure head cladding will be volumetrically examined concurrent with the examinations performed on the closure head to flange weld.

7. This requirement is applicable only to Boiling Water Type Reactors.

8. Six Circumferential welds and five longitudinal welds on the pressurizer are enclosed in a biological and missile shield and therefore are not accessible for examination.

9. The pressurizer nozzles are cast with the upper and lower heads, therefore there are no welds requiring examination in accordance with the requirement of IWB-2600.

10. There are no items in this category on this component in the Indian Point Unit #3 Class systems.

11. The steam generator nozzles are cast with the primary head, therefore, there are no welds requiring examination in accordance with the requirement of IWB-2600.

12. Examination of the steam generator primary nozzle to safe-end and safe-end to pipe weld is limited both by the nozzle geometry and surface condition and the limited surface preparation on the pipe side of the weld. The surface on the pipe side of the weld, which is a case elbow, is machined for a distance of approximately three inches from the edge of the weld. Ultrasonic examination is limited to this from the edge of the weld. Examinations can be performed on the surface of the weld but are severely limited from the nozzle side by the rough, as cast surface. Surface examination can be performed on one hundred percent of the weld and the base metal on the pipe side. The configuration is shown in figure 1.

13. Limitations may occur from the examination of piping system circumferential butt welds (Category B-J) when the welds occur at geometric discontinuities such as pipe-to-vessel welds, pipe-to-fitting welds or fitting-to-fitting welds. For pipe-to-fitting or pipe-to-vessel nozzle welds, examinations can be performed to the maximum practicable extent from the weld and pipe surfaces. Examination from the fitting side would be dependent upon the geometric configuration. Where elbows or tees are concerned, examinations can be performed from the fitting side except where the intrados of the fitting prevents adequate ultrasonic coupling. No examinations can be performed from the fitting side when it is a valve or a flange. In all cases, one hundred percent of the weld material can be examined. In instances where welds occur a fitting-to-fitting, access restrictions as outlined above occur on both sides of the welds. In instances where ultrasonic examinations cannot be performed on one hundred percent of the volume of the weld and heat affected zone, surface examinations will be performed to supplement the limited volumetric examination. E

14. The eight ninety degree elbows on the crossover leg of the reactor coolant system are fabricated in two halves from austenitic stainless steel castings welded together by the electroslag process. The structure and nature of the electroslag weld in the case austenitic ninety degree elbows is such that the material is opague to ultrasonic transmissions utilizing currently available techniques. Radiography is the only other available technique for volumetric examination. It is not possible to obtain code acceptable radiographs with double wall "shots" on these components which are approximately thirty-eight inches diameter, 3.5 inches wall thickness, containing a two-inch thick splitter plate and having radiation levels of up to 300 mr/hr on contact. Surface examination will be performed on these welds. E

15. The configuration of the reactor coolant branch nozzle connection welds is as shown in figure 2. Ultrasonic examinations cannot be performed on the surface of the weld. Examinations will be performed to the extent practical from the pipe and nozzle surfaces adjacent to the weld. Surface examinations will be performed to supplement the volumetric examination.

16. The piping system integrally welded supports are attached to the pipe by fillet welds. The configuration of such welds is such that examinations cannot be performed to the extend required by IWB-2600 and only the base material of the pipe wall can be examined by ultrasonic technique. Surface examinations will be performed on the integrally welded attachments to supplement the limited volumetric examinations.

17. The reactor coolant pump main flange bolting is ultrasonically examined in place in accordance with the requirements of IWB-2600, Item B5.1. The main flange bolting will be examined as required by IWB-2600, Item B5.2 whenever a pump is disassembled for maintenance or at the end of the ten-year interval whem a pump will be disassembled for the performance of examinations required by Category B-L-1.

18. The structure and nature of the material of integrally welded pump supports is such that it is opague to ultrasonic transmission. Surface and visual examination will be performed as a substitute for volumetric.

19. The reactor coolant pumps casing in the Indian Point Unit #3 plant is a weldment of two cast shells. The structure and nature of this material is such that it is opague to ultrasonic transmission. However, the accessible internal surfaces shall be visually and liquid penetrant inspected. Volumetric examinations as required by IWB-2600 can be attempted utilizing radiographic techniques. The success of these examinations (radiographs) will be dependent upon the availability of high energy gamma sources and the level of background radiation. If this examination can be attempted, the internal fittings on the pump may also become a restriction for performing such an examination.

20. There are 22 pipe-to-safe-end welds requiring ISI. These welds are inspected in conjunction with Items B1.6, B2.4 and B3.3

FIGURE 1

STEAM GENERATOR PRIMARY NOZZLE SAFE-END TO PIPE WELD CONFIGURATION

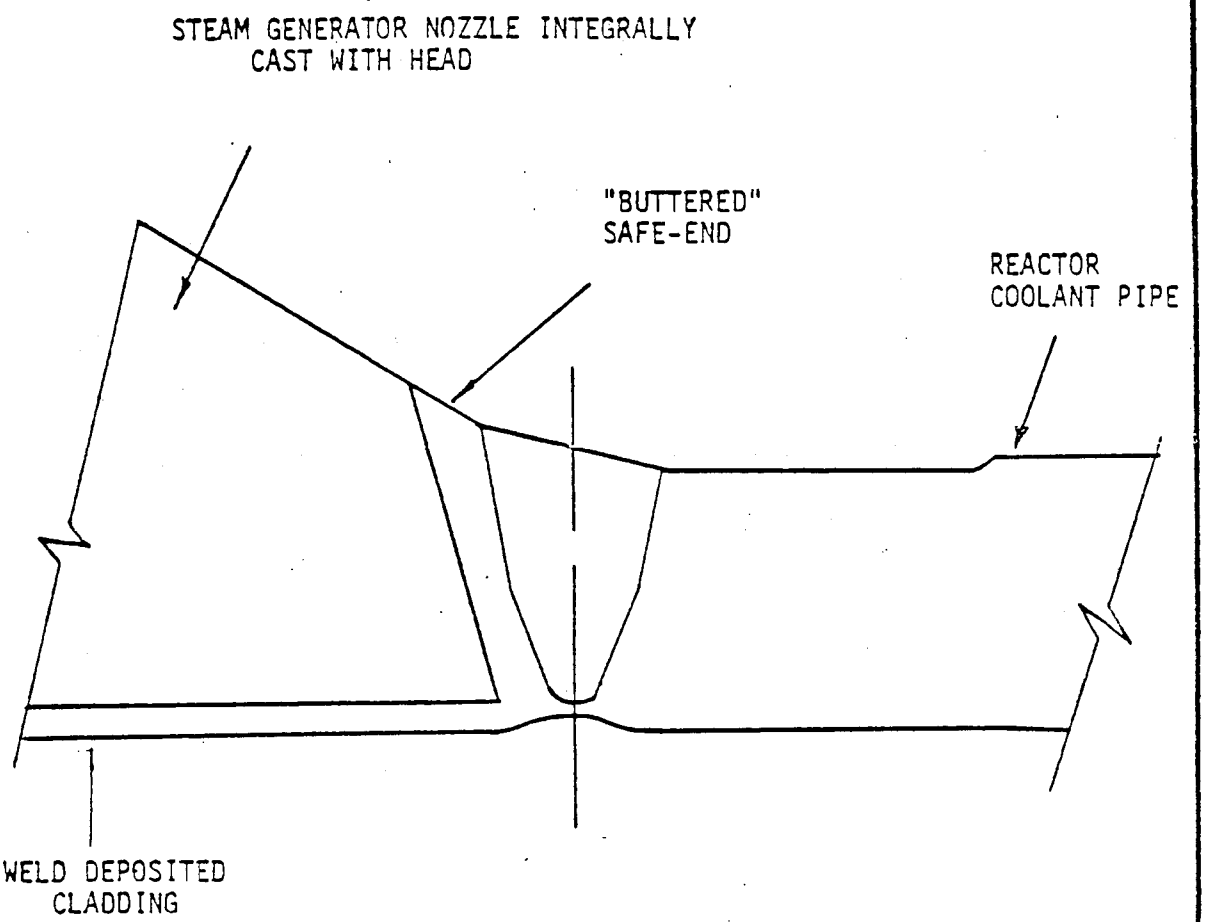

FIGURE 2

BRANCH NOZZLE CONNECTION WELD

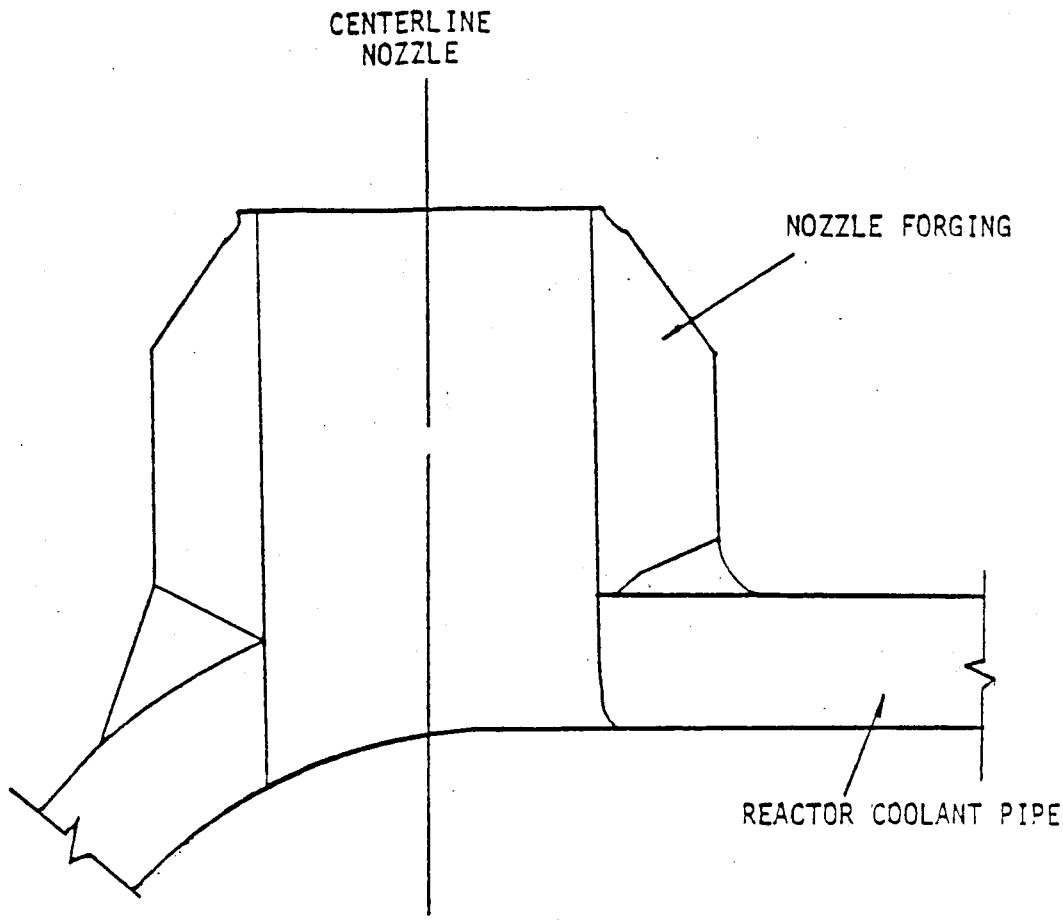

INDIAN POINT UNIT NO. 3 NUCLEAR POWER PLANT
INSERVICE INSPECTION
ASME CODE CLASS 2 COMPONENTS

TABLE IWB-2600 ITEM NO.	TABLE IWB-2500 EXAMINATION CATEGORY	SYSTEM OR COMPONENT	CODE APPLICABLE TO CONSTRUCTION	AREA TO BE EXAMINED	EXAMINATION REQUIREMENT	SECTION XI CODE RELIEF REQUESTED
C1.1	C-A	Steam Generators (4) Shell Side RCPCSG-31	III-A	Upper head to Shell Weld	Volumetric	NO
C1.1	C-A	RCPCSG-32 RCPCSG-33 RCPCSG-34		Upper Shell to Transition Weld	Volumetric	NO
C1.1	C-A			Transition to lower shell weld	Volumetric	NO
C1.1	C-A			Lower shell to Stub barrel weld	Volumetric	NO
C1.1	C-A			Stub barrel to tubesheet weld	Volumetric	NO
C1.2	C-B			Steam Outlet Nozzle to shell weld	Volumetric	NO
C1.2	C-B			Feedwater Inlet Nozzle to shell weld	Volumetric	NO
C1.3	C-C			Integrally Welded Supports	Not Applicable	No - Note 1
C1.4	C-D			Manway Bolting	Visual and Volumetric	NO
C1.1	C-A	Residual Heat Exchangers (2) (Tube side)	III-C	Head to Shell Welds	Volumetric	NO
C1.1	C-A	ACAHRS1-31 ACAHRS2-32		Shell to Flange Welds	Volumetric	NO
C1.2	C-B			Nozzle to Vessel Welds	Volumetric	Yes - Note 2
C1.3	C-C			Integrally Welded Supports	Surface	NO
C1.4	C-D			Tubesheet Flange Bolting	Visual and Volumetric	NO

INDIAN POINT UNIT NO. 3 NUCLEAR POWER PLANT
INSERVICE INSPECTION
ASME CODE CLASS 2 COMPONENTS

TABLE IWB-2600 ITEM NO.	TABLE IWB-2500 EXAMINATION CATEGORY	SYSTEM OR COMPONENT	CODE APPLICABLE TO CONSTRUCTION	AREA TO BE EXAMINED	EXAMINATION REQUIREMENT	SECTION XI CODE RELIEF REQUESTED
C4.4	C-E-2			Support Components	Visual	NO

ASME CODE CLASS 2 COMPONENTS

NOTES

1. There are no items in this category for this component of the Indian Point unit #3 Nuclear Power Plant.

2. The nozzle to vessel welds of the Residual Heat Exchangers are covered by .75" thick by 3" wide reinforcement pads as shown in figure 3. These welds are not accessible for examination by Volumetric or surface methods. The area will be subject to visual examination for evidence of leakage during system pressure tests.

3. Examination of Class 2 piping systems is limited by those occuring at geometric discontinuities such that some limitations may be expected at all locations. For pipe to fitting or pipe to vessel nozzle welds, examinations can be performed to the extent required by T-532 of Section V from the weld and pipe surfaces. Examination from the fitting side would be dependent upon the geometric configuration. Where elbows or tees are concerned, examinations can be performed from the fitting side except where the intrados of the fitting prevents adequate ultrasonic coupling. No examinations can be performed from the fitting side when it is a valve or a flange. In all cases one hundred percent of the weld material can be examined. In instances where welds occur at fitting to fitting, access restrictions as outlined above occur on both sides of the weld. In instances where ultrasonic examinations cannot be performed on one hundred percent of the volume of the weld and heat affected zone, surface examination will be performed to supplement the limited volumetric examination. See Appendix "A" for a fabrication of Class 2 system welds where the geometric configuration limits volumetric examination.

4. The configuration of typical branch pipe to pipe welds is as shown in figure 4. Ultrasonic examination cannot be performed on the surface of the weld. Examinations will be performed to the extent practical from the pipe and nozzle surfaces adjacent to the weld. Surface examination of the weld will be performed to supplement the volumetric examination.

5. Welds in Class 2 Piping Systems, Categories C-F and C-G, with nominal wall thickness 1/2 inch or less, which would receive surface examinations are those in the following systems:

   1. Mainsteam 6 inch power-operated relief lines

   2. RHR 14 inch take off from valve 730 to pumps (line 10)

   3. RHR 8 and 12 inch discharge lines from pumps to heat exchangers (lines 9 and 90)

4. RHR 12 inch line 155 to valve 882 in suction from RWST

5. RHR 8 and 12 inch line 190 to valve 883 in return to RWST

6. Recirculation 8 inch line 293 from valves 1802A and B.

7. SIS recirculation 6 and 8 inch lines 60 and 89 to valves 888A and B

8. Spray lines 93 and 94 to valves 889A and B

9. RHR, Low head SIS outlet lines 355 and 358 from heat exchangers to valves 746 and 747

10. SIS 6 inch lines 56 and 550 from pump discharge.

APPENDIX A

CLASS 2 WELDS WHERE GEOMETRIC CONFIGURATION LIMITS

VOLUMETRIC EXAMINATION

	SKETCH
Loop 1 feedwater valve to valve weld #15	(2-2102)
Loop 2 feedwater valve to valve weld #17	(2-2202)
Loop 3 feedwater valve to valve weld #17	(2-2302)
Loop 4 feedwater valve to valve weld #22	(2-2402)
RHR pump suction line elbow to valve weld #1	(2-2500)
RHR pump suction line elbow to valve weld #8	(2-2500)
RHR pump suction line tee to valve weld #17	(2-2500)
RHR pump suction line tee to elbow weld #18	(2-2500)
RHR pump suction line tee to reducer weld #23	(2-2500)
RHR pump suction line elbow to valve weld #27	(2-2500)
RHR pump suction line valve to valve weld #28	(2-2500)
RHR pump suction line elbow to tee weld #34	(2-2500) B
RHR pump discharge line elbow to valve weld #33	(2-2510)
RHR pump discharge line elbow to valve weld #6	(2-2511)
RHR pump discharge line reducer to valve weld #32	(2-2511)
RHR pump discharge line reducer to elbow weld #29	(2-2512)
RHR heat exchanger outlet line elbow to valve weld #6	(2-2520)
RHR heat exchanger outlet line tee to valve weld #9	(2-2520)
RHR heat exchanger outlet line elbow to reducer weld #15	(2-2520)
RHR heat exchanger outlet line elbow to flange weld #3	(2-2530)
RHR heat exchanger outlet line tee to reducer weld #8	(2-2530)
RHR heat exchanger outlet line reducer to valve weld #38	(2-2530)
RHR heat exchanger outlet line reducer to tee weld #33	(2-2530)
RHR heat exchanger outlet line elbow to flange weld #29	(2-2530)
RHR heat exchanger outlet line tee to reducer weld #54	(2-2530)
RHR heat exchanger outlet line reducer to valve weld #55	(2-2530)
RHR heat exchanger outlet line tee to reducer weld #11	(2-2531)
RHR heat exchanger outlet line elbow to valve weld #23	(2-2531)
RHR return lines elbow to valve weld #1	(2-2532)
SIS pump discharge line tee to reducer weld #35	(2-2540)

FIGURE 3

RESIDUAL HEAT REMOVAL HEAT EXCHANGER NOZZLE TO VESSEL CONFIGURATION

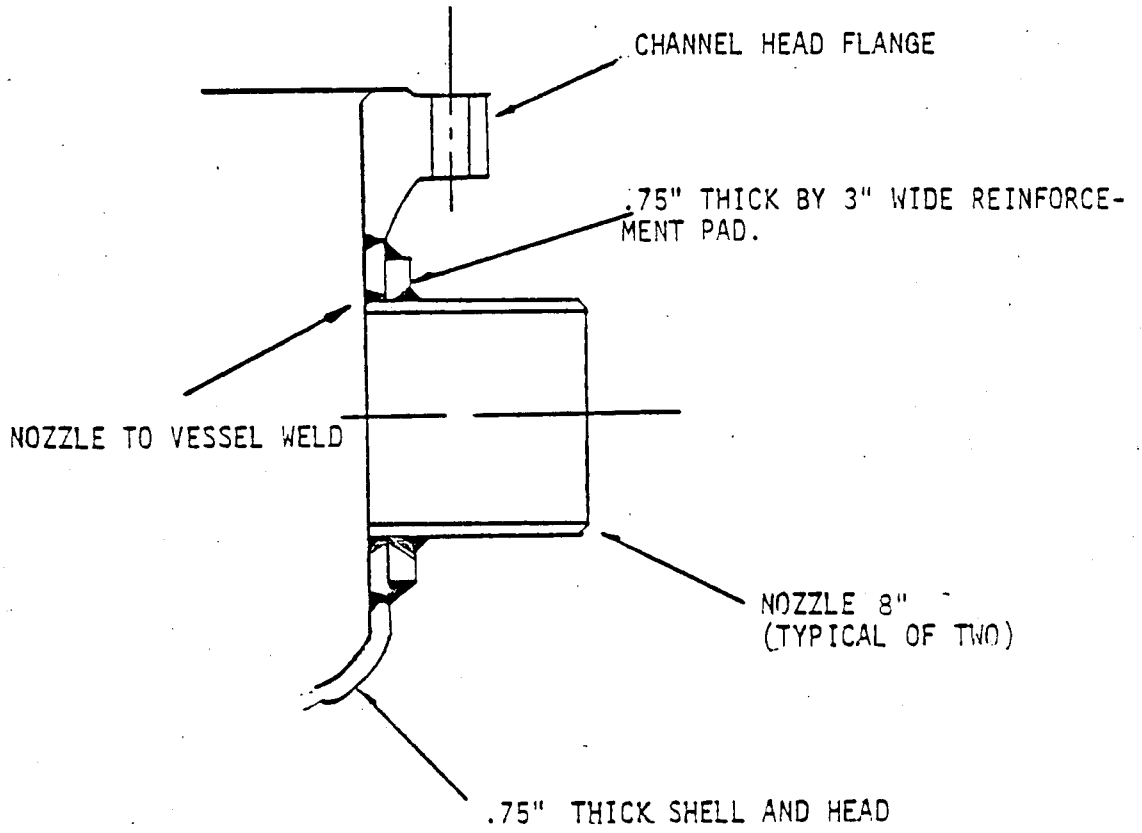

Figure 4

BRANCH NOZZLE CONNECTION WELD

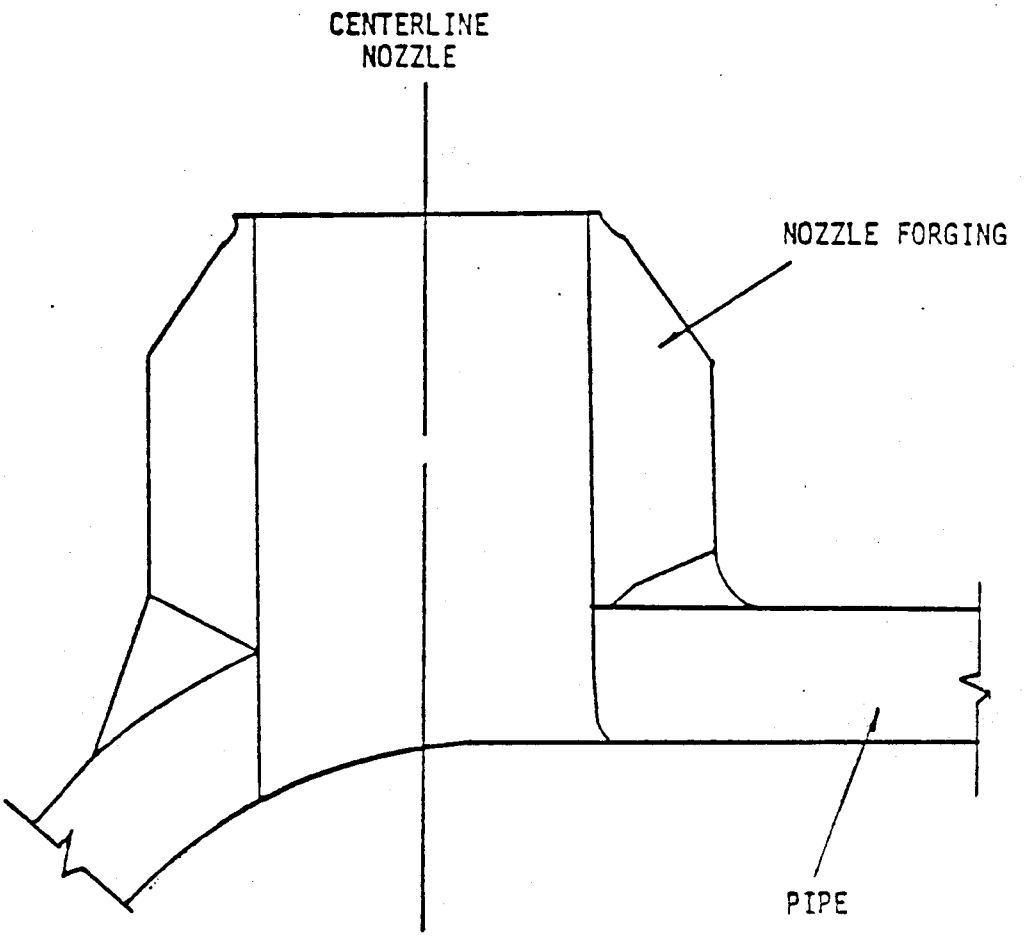

INDIAN POINT UNIT NO. - .UCLEAR POWER PLANT
INSERVICE INSPECTION PROGRAM
ASME CODE CLASS 3 COMPONENTS

SYSTEM	COMPONENT DESCRIPTION/IDENTIFICATION	CODE APPLICABLE TO CONSTRUCTION	METHOD OF EXAMINATION	SECTION XI CODE RELIEF REQUESTED
Feedwater System	Motor Driven Auxiliary Feedwater Pump 31		Visual/Operating Pressure	
	Motor Driven Auxiliary Feedwater Pump 33		Visual/Operating Pressure	
	Turbine Driven Auxiliary Feedwater Pump 32		Visual/Operating Pressure	
	Piping		Visual/Operating Pressure	
	Supports		Visual	

INDIAN POINT UNIT NO. . .UCLEAR POWER PLANT
INSERVICE INSPECTION PROGRAM
ASME CODE CLASS 3 COMPONENTS

SYSTEM	COMPONENT DESCRIPTION/IDENTIFICATION	CODE APPLICABLE TO CONSTRUCTION	METHOD OF EXAMINATION	SECTION XI CODE RELIEF REQUESTED
Auxiliary Coolant System	Residual Heat Exchangers (shell side) ACAHRS1-31	VIII	Visual/Operating Pressure	Yes - Note 4
	Residual Heat Exchangers (shell side) ACAHRS2-32	VIII	Visual/Operating Pressure	Yes - Note 4
	Recirculation Pump 31 (Coolers)		Visual/Operating Pressure	
	Recirculation Pump 32 (Coolers)		Visual/Operating Pressure	
	Reactor Coolant Pump RCPCPC1-31 Lube Oil Cooler		Visual/Operating Pressure	
	Reactor Coolant Pump RCPCPC2-32 Lube Oil Cooler		Visual/Operating Pressure	
	Reactor Coolant Pump RCPCPC3-33 Lube Oil Cooler		Visual/Operating Pressure	
	Reactor Coolant Pump RCPCPC4-34 Lube Oil Cooler		Visual/Operating Pressure	
	Spent Fuel Pool Heat Exchanger ACAHSF1-31		Visual/Operating Pressure	Yes - Note 4
	Auxiliary Component Cooling Pump 31		Visual/Operating Pressure	
	Auxiliary Component Cooling Pump 32		Visual/Operating Pressure	
	Auxiliary Component Cooling Pump 33		Visual/Operating Pressure	
	Auxiliary Component Cooling Pump 34		Visual/Operating Pressure	

A

INDIAN POINT UNIT NO. .UCLEAR POWER PLANT
INSERVICE INSPECTION PROGRAM
ASME CODE CLASS 3 COMPONENTS

SYSTEM	COMPONENT DESCRIPTION/IDENTIFICATION	CODE APPLICABLE TO CONSTRUCTION	METHOD OF EXAMINATION	SECTION XI CODE RELIEF REQUESTED
Auxiliary Coolant System	Spent Fuel Pit Pump ACAPSF1-31		Visual/Operating Pressure	
	Spent Fuel Pit Pump ACAPSF2-32		Visual/Operating Pressure	
	Spent Fuel Heat Exchanger		Visual/Operating Pressure	Yes - Note 4
	Spent Fuel Pit Strainer ACSRSF1		Visual/Operating Pressure	Yes - Note 1
	Residual Heat Removal Pump ACAPRH1-31 Seal Heat Exchanger		Visual/Operating Pressure	Yes - Note 4
	Residual Heat Removal Pump ACAPRH2-32 Seal Heat Exchanger		Visual/Operating Pressure	Yes - Note 4
	Component Cooling Surge Tank ACATCC1-31	VIII	Visual/Operating Pressure	
	Component Cooling Surge Tank ACATCC2-32	VIII	Visual/Operating Pressure	
	Component Cooling Heat Exchanger ACAHCC1-31 (shell side)	VIII	Visual/Operating Pressure	Yes - Note 4
	Component Cooling Heat Exchanger ACAHCC2-32	VIII	Visual/Operating Pressure	Yes - Note 4
	Component Cooling Pump ACAPCC1-31		Visual/Operating Pressure	
	Component Cooling Pump ACAPCC2-32		Visual/Operating Pressure	
	Component Cooling Pump ACAPCC3-33		Visual/Operating Pressure	
	Safety Injection Pump S1APS11-31 Oil Cooler		Visual/Operating Pressure	

A

INDIAN POINT UNIT NO. 3 NUCLEAR POWER PLANT
INSERVICE INSPECTION PROGRAM
ASME CODE CLASS 3 COMPONENTS

SYSTEM	COMPONENT DESCRIPTION/IDENTIFICATION	CODE APPLICABLE TO CONSTRUCTION	METHOD OF EXAMINATION	SECTION XI CODE RELIEF REQUESTED
Auxiliary Coolant System	Safety Injection Pump S1APS12-32 Oil Cooler		Visual/Operating Pressure	
	Safety Injection Pump S1APS13-33 Oil Cooler		Visual/Operating Pressure	
	RPV Cooling Support Blocks 31		Visual/Operating Pressure	Yes - Note 2
	RPV Cooling Support Blocks 32		Visual/Operating Pressure	Yes - Note 2
	RPV Cooling Support Blocks 33		Visual/Operating Pressure	Yes - Note 2
	RPV Cooling Support Blocks 34		Visual/Operating Pressure	Yes - Note 2
	RCP Motor Bearing Heat Exchanger		Visual/Operating Pressure	Yes - Note 3,4
	Seal Water Heat Exchanger		Visual/Operating Pressure	Yes - Note 4
	Non-Regen. Heat Exchanger		Visual/Operating Pressure	Yes - Note 4
	Thermal Barrier Heat Exchanger		Visual/Operating Pressure	Yes - Note 3,4
	Spray Additive Tank		Visual/Operating Pressure	
	Waste Gas Compressor 31		Visual/Operating Pressure	
	Waste Gas Compressor 32		Visual/Operating Pressure	
	Waste Evaporator Distiller Cooler		Visual/Operating Pressure	
	Waste Evaporator Condenser 31		Visual/Operating Pressure	Yes - Note 5
	Boric Acid Evaporator Distiller Cooler 31		Visual/Operating Pressure	

A

INDIAN POINT UNIT NO. NUCLEAR POWER PLANT
INSERVICE INSPECTION PROGRAM
ASME CODE CLASS 3 COMPONENTS

SYSTEM	COMPONENT DESCRIPTION/IDENTIFICATION	CODE APPLICABLE TO CONSTRUCTION	METHOD OF EXAMINATION	SECTION XI CODE RELIEF REQUESTED
Auxiliary Coolant System	Boric Acid Evaporator Condenser 31		Visual/Operating Pressure	
	Boric Acid Evaporator Vent Cond. (31)		Visual/Operating Pressure	
	Steam Generator Sample Heat Exchanger 31		Visual/Operating Pressure	Yes - Note 4
	Steam Generator Sample Heat Exchanger 32		Visual/Operating Pressure	Yes - Note 4
	Steam Generator Sample Heat Exchanger 33		Visual/Operating Pressure	Yes - Note 4
	Steam Generator Sample Heat Exchanger 34		Visual/Operating Pressure	Yes - Note 4
	Gross Failed Fuel Detector		Visual/Operating Pressure	
	Flash Evaporator Product Cooler		Visual/Operating Pressure	
	#31 Charge Pump Cooler		Visual/Operating Pressure	
	#32 Charge Pump Cooler		Visual/Operating Pressure	
	#33 Charge Pump Cooler		Visual/Operating Pressure	
	Boric Acid Evaporator Distiller Cooler 32		Visual/Operating Pressure	
	Boric Acid Evaporator Condenser 32		Visual/Operating Pressure	
	Boric Acid Evaporator Vent Cond. 32		Visual/Operating Pressure	
	Pressurizer Steam Sample Heat Exchanger 31 & 32		Visual/Operating Pressure	Yes - Note 4

A

INDIAN POINT UNIT NO. NUCLEAR POWER PLANT
INSERVICE INSPECTION PROGRAM
ASME CODE CLASS 3 COMPONENTS

SYSTEM	COMPONENT DESCRIPTION/IDENTIFICATION	CODE APPLICABLE TO CONSTRUCTION	METHOD OF EXAMINATION	SECTION XI CODE RELIEF REQUESTED
Auxiliary Coolant System	Pressurizer Liquid Sample Heat Exchanger 31 & 32		Visual/Operating Pressure	Yes - Note 4
	Reactor Coolant Sample Heat Exchanger 31		Visual/Operating Pressure	Yes - Note 4
	Reactor Coolant Sample Heat Exchanger 32		Visual/Operating Pressure	Yes - Note 4
	Piping		Visual/Operating Pressure	Yes - Note 4
	Hangers		Visual	

SYSTEM	COMPONENT DESCRIPTION/IDENTIFICATION	CODE APPLICABLE TO CONSTRUCTION	METHOD OF EXAMINATION	SECTION XI CODE RELIEF REQUESTED
Service Water System	Recirculation Fan 31 Cooler		Visual/Operating Pressure	
	Recirculation Fan 32 Cooler		Visual/Operating Pressure	
	Recirculation Fan 33 Cooler		Visual/Operating Pressure	
	Recirculation Fan 34 Cooler		Visual/Operating Pressure	
	Recirculation Fan 35 Cooler		Visual/Operating Pressure	
	Service Water Pumps 34 (Nuclear) 35 36		Visual/Operating Pressure	
	Service Water Pumps 31 (Conventional) 32 33		Visual/Operating Pressure	
	Component Cooling Heat Exchangers 31 (Tube Side) 32		Visual/Operating Pressure	Yes - Note 4
	Service Water Strainers 31 32 33 34 35 36		Visual/Operating Pressure	
	Jacket Water Coolers 31 32 33		Visual/Operating Pressure	
	Diesel Generator Lube Oil Coolers 31 32 33		Visual/Operating Pressure	

A

INDIAN POINT UNIT NO. 3 NUCLEAR POWER PLANT
INSERVICE INSPECTION PROGRAM
ASME CODE CLASS 3 COMPONENTS

SYSTEM	COMPONENT DESCRIPTION/IDENTIFICATION	CODE APPLICABLE TO CONSTRUCTION	METHOD OF EXAMINATION	SECTION XI CODE RELIEF REQUESTED
Service Water System	Piping		Visual/Operating Pressure	A
	Supports & Hangers		Visual	

ASME CLASS 3 RELIEF REQUEST NOTES

Note 1: The Spent Fuel Pit Strainer is submerged underwater and therefore is not accessible for direct visual observation.

Note 2: Due to the reactor vessel support design the reactor vessel cooling support Blocks 1, 2, 3 and 4 are not accessible for direct visual observation.

Note 3: The Reactor Coolant Pump Thermal Barrier and Motor Bearing heat exchangers are integral within the pump housing and therefore are not accessible for direct visual observation. Examinations are limited to indirect observations for evidence of leakage at operating pressure as practical.

Note 4: Where heat exchanger design precludes access to the heat exchanger tubes for tube side examination, visual examination for evidence of leakage is limited to the external pressure retaining surfaces where any leakage could reasonably be expected to be observed by visual means.

Note 5: This component has been temporarily placed out of service. There are not current plans at this time to place this component back into service. If the component is returned to service a visual examination for evidence of leakage at operating pressure will be performed at this time.

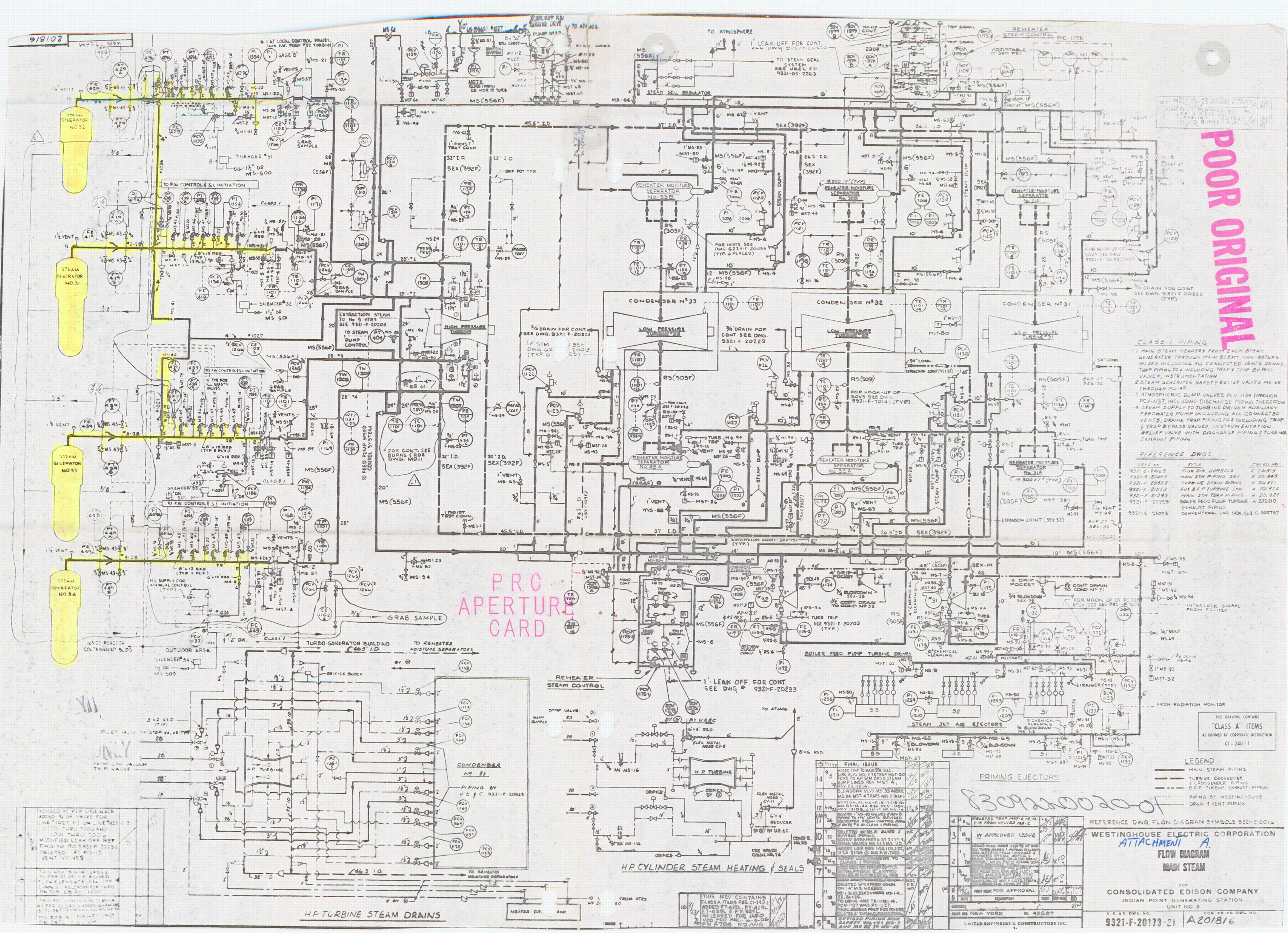
POOR ORIGINAL
PRC APERTURE CARD
STEAM GENERATOR NO. 32
STEAM GENERATOR NO. 31
STEAM GENERATOR NO. 33
STEAM GENERATOR NO. 34
CONDENSER Nº 33
CONDENSER Nº 32
CONDENSER Nº 31
LOW PRESSURE TURBINE Nº 33
LOW PRESSURE TURBINE Nº 32
LOW PRESSURE TURBINE Nº 31
HIGH PRESSURE TURBINE
REHEATER MOISTURE SEPARATOR No. 33B
REHEATER MOISTURE SEPARATOR No. 32B
REHEATER MOISTURE SEPARATOR No. 31B
REHEATER MOISTURE SEPARATOR No. 33A
REHEATER MOISTURE SEPARATOR No. 32A
REHEATER MOISTURE SEPARATOR No. 31A
REHEATER STEAM CONTROL PIC-1175
TO ATMOSPHERE
1" LEAK-OFF FOR CONT. SEE DWG. 9321-F-20233
TO STEAM SEAL SYSTEM SEE UBEC FP 9321-05-2263
STEAM SEAL REGULATOR
TO F.W. CONTROL & S.I. INITIATION
EXTRACTION STEAM TO No 5 HTRS SEE 9321-F-20203
TO STEAM DUMP CONTROL
TO FEED PUMP SPEED CONTROL SYSTEM
FOR CONT. SEE BURNS & ROE DWG. M011
GRAB SAMPLE
TURBO GENERATOR BUILDING
INSIDE REACTOR CONTAINMENT BLDG
OUTDOOR AREA
TO REHEATER MOISTURE SEPARATORS
REHEATER STEAM CONTROL
BOILER FEED PUMP TURBINE DRIVES
STEAM JET AIR EJECTORS
PRIMING EJECTORS
H.P. TURBINE STEAM DRAINS
H.P. CYLINDER STEAM HEATING & SEALS
CONDENSER Nº 33
PIPING BY U.E. & C. 9321-F-20829
FROM LOW VACUUM TRIP VALVE
FROM RADIATION MONITOR
CLASS I PIPING
1. MAIN STEAM HEADERS FROM EACH STEAM GENERATOR THROUGH MAIN STEAM NON-RETURN VALVES INCLUDING ALL CONNECTED VENTS, DRAINS, TRAP PIPING TO & INCLUDING TRAPS & TRAP BY PASS VALVES, INSTRUMENTATION.
2. STEAM GENERATOR SAFETY RELIEF VALVES MS-45 THROUGH MS-49.
3. ATMOSPHERIC DUMP VALVES PCV-1134 THROUGH PCV-1137, INCLUDING DISCHARGE PIPING THEREFROM.
4. STEAM SUPPLY TO TURBINE DRIVEN AUXILIARY FEEDWATER PUMP INCLUDING ALL CONNECTED VENTS, DRAINS, TRAP PIPING TO & INCLUDING TRAP & TRAP BY PASS VALVES. INSTRUMENTATION. RELIEF VALVE WITH DISCHARGE PIPING & TURBINE EXHAUST PIPING.
REFERENCE DWGS.
9321-C-20163 FLOW DIA SYMBOLS C-201815
9321-F-20493 MAIN STM PIPING STM A-201849
9321-F-20823 TURBINE DRAIN PIPING A-201811
9321-F-21253 AUX B.F.P. TURBINE STM A-201-F26
9321-F-21293 MAIN STM TRAP PIPING A-201-F28
9321-F-22253 BOILER FEED PUMP TURBINE EXHAUST PIPING A-202010
9321-C-23003 CONVENTIONAL LINE SCH. SV-1 C-202787
THIS DRAWING CONTAINS "CLASS A" ITEMS AS DEFINED BY CORPORATE INSTRUCTION CI-240-1
LEGEND
MAIN STEAM PIPING
TURBINE CROSSOVER & CROSSUNDER PIPING
B.F.P. TURBINE EXHAUST PIPING
PIPING BY WESTINGHOUSE
DRAIN & VENT PIPING
FINAL ISSUE
FOR APPROVAL
UNITED ENGINEERS & CONSTRUCTORS INC.
NEW YORK
REFERENCE DWG. FLOW DIAGRAM SYMBOLS 9321-C-2016
WESTINGHOUSE ELECTRIC CORPORATION
ATTACHMENT A.
FLOW DIAGRAM
MAIN STEAM
FOR
CONSOLIDATED EDISON COMPANY
INDIAN POINT GENERATING STATION
UNIT NO. 3
U.E. & C. DWG. NO. 9321-F-20173-21
CON. ED. CO. DWG. NO. A201816

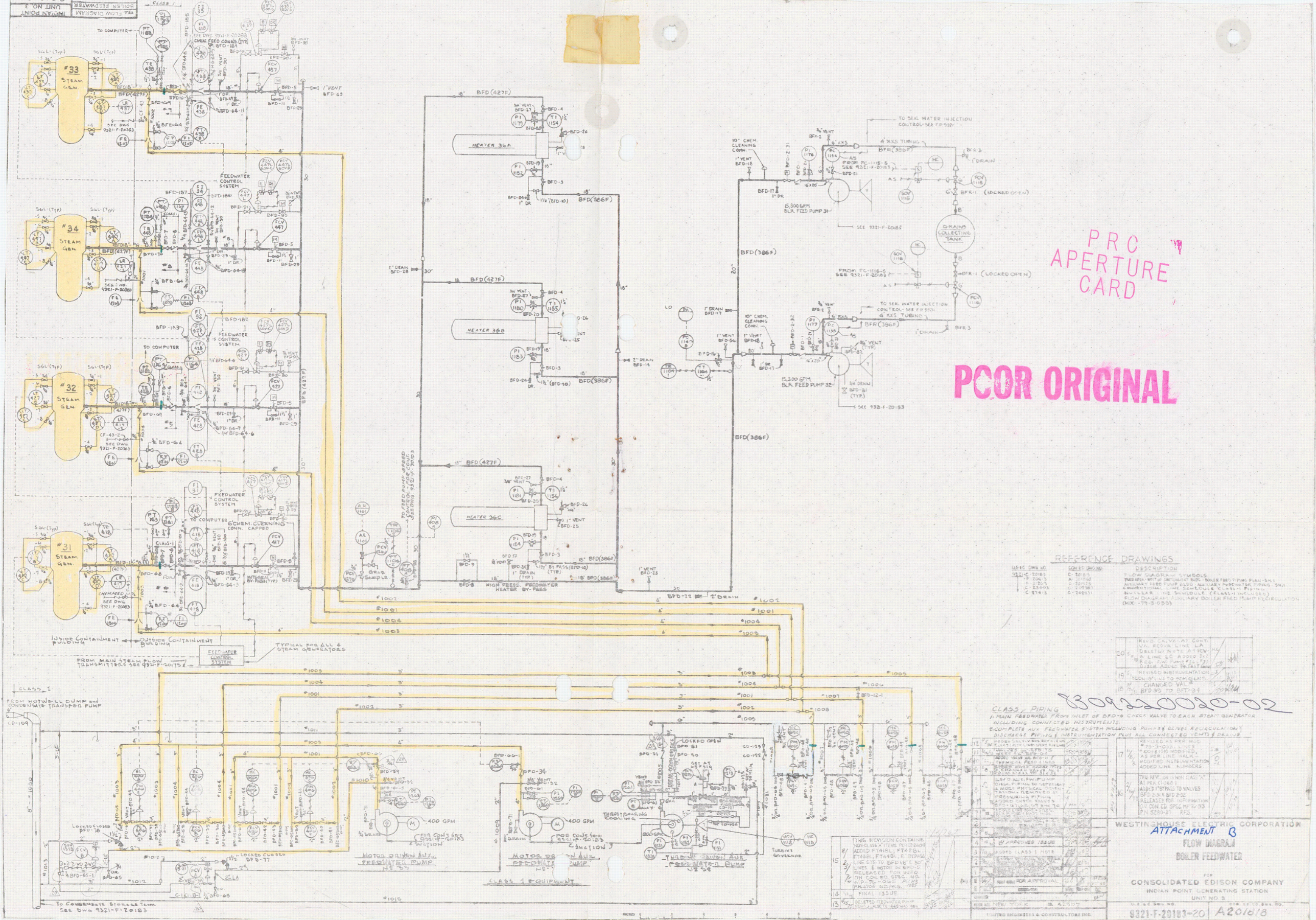
FLOW DIAGRAM
BOILER FEEDWATER
UNIT NO. 3
#33 STEAM GEN
#34 STEAM GEN
#32 STEAM GEN
#31 STEAM GEN
FEEDWATER CONTROL SYSTEM
TO COMPUTER
HEATER 36A
HEATER 36B
HEATER 36C
HIGH PRESS. FEEDWATER HEATER BY-PASS
15,300 GPM BLR. FEED PUMP 31
15,300 GPM BLR. FEED PUMP 32
DRAINS COLLECTING TANK
INSIDE CONTAINMENT BUILDING
OUTSIDE CONTAINMENT BUILDING
TYPICAL FOR ALL 4 STEAM GENERATORS
FROM MAIN STEAM FLOW TRANSMITTERS SEE 9321-F-20175
FROM MOTWELL PUMP and CONDENSATE TRANSFER PUMP
MOTOR DRIVEN AUX. FEEDWATER PUMP
CLASS 1 EQUIPMENT
CLASS 1 PIPING
1-MAIN FEEDWATER FROM INLET OF BFD-6 CHECK VALVE TO EACH STEAM GENERATOR INCLUDING CONNECTED INSTRUMENTS.
2-COMPLETE AUX. FEEDWATER SYSTEM INCLUDING PUMPS & DRIVES, RECIRCULATION, DISCHARGE PIPING & INSTRUMENTATION PLUS ALL CONNECTED VENTS & DRAINS
REFERENCE DRAWINGS
FLOW DIAGRAM SYMBOLS
CONVENTIONAL LINE SCHEDULE CLASS-1 PIPING
NUCLEAR LINE SCHEDULE (CLASS-1 INCLUDES)
FLOW DIAGRAM AUXILIARY BOILER FEED PUMP RECIRCULATION
WESTINGHOUSE ELECTRIC CORPORATION
FLOW DIAGRAM
BOILER FEEDWATER
CONSOLIDATED EDISON COMPANY
INDIAN POINT GENERATING STATION
UNIT NO. 3
9321-F-20183-20
A20818
ATTACHMENT B
B09220020-02
PRC APERTURE CARD
POOR ORIGINAL