POWER AUTHORITY OF THE STATE OF NEW YORK

10 COLUMBUS CIRCLE NEW YORK, N. Y. 10019

(212) 397-6200

TRUSTEES

JOHN S. DYSON
CHAIRMAN

GEORGE L. INGALLS
VICE CHAIRMAN

RICHARD M. FLYNN

ROBERT I. MILLONZI

FREDERICK R. CLARK

LEROY W. SINCLAIR
PRESIDENT & CHIEF OPERATING OFFICER

WALTER T. KICINSKI
FIRST EXECUTIVE VICE PRESIDENT & CHIEF ADMINISTRATIVE OFFICER

JOSEPH R. SCHMIEDER
EXECUTIVE VICE PRESIDENT & CHIEF ENGINEER

JOHN W. BOSTON
EXECUTIVE VICE PRESIDENT PROCEDURES & PERFORMANCE

THOMAS R. FREY
SENIOR VICE PRESIDENT & GENERAL COUNSEL

October 25, 1982
IPN-82-71

Director of Nuclear Reactor Regulation
U. S. Nuclear Regulatory Commission
Washington, D. C. 20555

Attention: Mr. Darrell G. Eisenhut, Director
Division of Licensing

Subject: Indian Point 3 Nuclear Power Plant
Docket No. 50-286
Girth Weld Repair Program

Dear Sir:

In accordance with your letter dated September 24, 1982 the Authority provides, in Attachment A, the information you requested. The Authority will continue to cooperate with the NRC to assure satisfactory resolution of this matter.

Should you or your staff have any questions, please contact Mr. P. Kokolakis of my staff.

Very truly yours,

for C. M. Wilbrading

J. P. Bayne
Executive Vice President
Nuclear Generation

Enc.

cc: Resident Inspector's Office
Indian Point Unit 3
USNRC
P. O. Box 38
Buchanan, N. Y. 10511

State of New York
County of New York

Subscribed and sworn to before me this 25th day of October 1982.

Mitchell J. Weinstein

MITCHELL J. WEINSTEIN
Notary Public, State of New York
No. 30-4740329
Qualified in Nassau County
Commission Expires March 30, 1983

A001

8210280070 821025
PDR ADOCK 05000286
P PDR

ATTACHMENT A

RESPONSE TO 9/24/82

NRC REQUEST

CONCERNING GIRTH WELD

REPAIR PROGRAM

POWER AUTHORITY OF THE STATE OF NEW YORK
INDIAN POINT 3 NUCLEAR POWER PLANT
DOCKET NO. 50-286
OCTOBER 25, 1982

ATTACHMENT A

RESPONSE TO 9/24/82 NRC REQUEST
CONCERNING GIRTH WELD REPAIR PROGRAM

During the time Indian Point No. 3 was shutdown for the spring 1982 refueling outage a crack was discovered which propagated through the upper shell to transition cone girth weld (closure weld) in steam generator (SG) No. 32 (W Series 44) producing a small steam leak.

An ISI Section XI ultrasonic examination (UT) was performed adjacent to the through wall hole (approximately 3' to either side) which identified numerous indications. Next, UT was performed on all weld areas identified on the steam generators for ISI (removable insulation windows). No indications were found on welds other than the closure girth welds. Both 31 and 33 steam generators had indications on the girth weld similar to those on 32 steam generator (SG 34 did not have a removable insulation window on the girth weld). (See Attachment 2)

The inspection program was then expanded to include UT (from O.D.) of the entire girth weld and MT of the I.D. surface for all four steam generators.

The UT results are tabulated in Attachment 1.

The MT results are tabulated on page 2.

Study of the UT and MT data was made by superimposing the MT data onto a map of the UT data. There appears to be some correlation of data but uncertainties with the actual location of the center line of the girth weld (both on the I.D. and O.D.) and the geometric variations associated with the forming, welding and grinding of such massive plates of steel make the location of UT reflectors imprecise.

Cross grinding of several I.D. cracks on SG 32 revealed that the cracks are in line with the weld and propagate in an orientation perpendicular to the I.D. surface of the weld.

Chemical analysis was performed on subsurface samples shaved from the I.D. and O.D. of SG 32 representing base metal above and below the girth weld and the weld itself. The results of this analysis substantiated the base metal to be SA302 grade B and the weld filler metal to be 8018-C3.

One boat sample was removed from the I.D. of SG 32 girth weld containing typical cracks. The sample was sent to Lucius Pitkin and General Electric for metallurgical and chemical analyses.

The preliminary results of the metallurgical and chemical analyses on these items has been reviewed by Messrs. D. Smith and S. Reynolds of the NRC and Dr. John Weeks and Mr. C. Czajkowski of Brookhaven National Labs on October 4 and 5, 1982.

The following reports will be submitted to you by November 15, 1982:

- o LP Report No. M6820 - Charpy Impact Testing
- o LP Report No. M6850 - Charpy Impact Tests Weld Plate Coupon 3/16" Diameter E7018 Electrodes
- o LP Report No. 7154 - Circumferential Weld Boat Sample from Steam Generator 32 (contains report M6785-Filings from Steam Generator No. 32)
- o LP Report No. 6855C - Weld Metal Charpy V-Notch Tests
- o LP Report No. 6855C-1-Weld Procedure Qualification SMAW WPS3A, SGT4
- o LP Report No. 6855C-2-Weld Coupon Heat - Affect Zone Hardness Survey
- o LP Report No. 6855C-3-Weld Procedure Heat-Affected Zone Microstructure and Hardness Survey
- o LP Report No. 7164 - Metallurgical Examination of Shell Girth Weld Coupon from Steam Generator 32
- o GE Report CI - 1052 - Examination of a Boat Sample Supplied by GE, I&SE Nuclear Plant Services

Our Quality Assurance and Design & Analysis Departments performed a thorough review of the various manufacturing documentation, NDE records and radiographs, weld and heat treatment procedures and shop travelers. This review determined that the vessels were built at Westinghouse, Lester, Pa. and shipped to Westinghouse, Tampa, Florida for the final assembly which consisted of set up, welding of the closure seam and the post weld heat treatment (PWHT). The vessels were built to the 1965 edition of the ASME Code, Section III. These records show that the final post weld heat treatment of the vessels was performed at a temperature of 1050 - 1150°F for 8 hours for SG 31 and 34, 1010 - 1100°F for 12 hours for SG 32 and 1075 - 1140°F for 8 hours for SG 33 as allowed by code in lieu of 1125 ± 25°F for 2.5 hours.

Below is a matrix of manufacturing data and 1982 NDE results.

S/G	Westing. Serial #	Date Start of FAB	Weld Prep. Geo.	Weld Repairs by RT	# of MT (1982) Indications	Linear Inches Of (MT) Ind	Comments
31	8006	9/25/70	Backing Bar 1"x3/4"	2 areas	109	336	PWHT Repair ½ Bead Technique 400-500°F Ht
32	8004	8/5/70	"J"	4 areas	203	382	Thru-Wall Hole
33	8005	9/20/70	Backing Bar 1"x3/4"	1 area	53	259	
34	8003	7/28/70	"J"	26 areas	60	186	

Manufacturing radiographs, preservice and ISI reports were reviewed by our QA Department and the following results reported:

FABRICATION: 1970

Review of Westinghouse documentation and orginal shop radiographs indicate the S/G's were shipped with weld #6 (the girth weld) in an acceptable condition.

BASELINE: 1974

Locations. B-2 (SG 31), J-1 (SG 33), J-2 (SG 33) and I-1 (SG 33) were examined (See Attachment 2 for locations)

RESULTS

One reportable indication was recorded in each of the following locations:

B-2 - 50% DAC
I-1 - 100% DAC
J-1 - 65% DAC

Preservice documentation indicates a magnetic particle inspection and radiograph review was performed and found acceptable. The indications were determined to result from the configuration of the joint (geometric). Documentation to this effect is located in the 1974 Pre-service documentation.

1978 OUTAGE RELOAD I/CYCLE II

Steam Generator 31 - location B-2 which lies in the area bounded by points clockwise from the reference point (centerline of the feed water nozzle), was examined.

RESULTS

A non-relevant indication with up to 50% DAC was recorded on the DATASHEET.

1979 OUTAGE RELOAD II/CYCLE III

No examination required or scheduled.

1982 OUTAGE RELOAD III/CYCLE IV

Location - J-2, 70" to 82" clockwise from the 0" reference point (centerline of the feed water nozzle) was scheduled for examination.

RESULTS

There are no relevant indications based on the 1982 examination data for this area.

COMMENTS

a. Location from the 0" reference point was not recorded for the indications noted during the preservice and 1978 outage examinations, therefore these areas cannot be located precisely.

b. Location B-2 examined on June 24, 1978 was found free of relevant indications. The same location examined in March 1982 contained a total of 21 reportable UT indications.

c. Complete location of the area identified as J-1, J-2 and I-1 cannot be verified after insulation removal. According to conversations with Westinghouse ISI personnel the dimensional location from the 0" reference point was not recorded. The removable insulation was used as the location identification.

Computer enhancement was performed by Aptech on the original girth weld radiographs. This enhancement revealed the presence of linear indications in the welds of all 4 SGs and several linear indications in the immediate vicinity of the thru wall hole on SG 32 were also found. These indications have been matched with indications found in radiographs of this area made this outage.

To further investigate the ID indications in SG 34, three locations were selected from UT and MT records that appeared to be cracks in the base metal several inches from the centerline of the weld.

The three areas were etched and examined visually. In all cases the indications found are associated with the heat affected zones of large areas of weld repair emanating from the original girth weld into the base metal.

FURTHER WORK

A program is underway to perform grinding on the ID of SG 34 girth weld in several areas to determine the relationship between MT and UT indications, the accuracy of UT indication depths and lengths, and the extent of interconnections of the UT indications. Manual grinding will be employed using techniques developed to minimize crack propagation and metal removal which thereby minimizes the volume of the repair welds.

The data and field experience generated by this program will enable the Authority to establish a realistic repair schedule, determine manpower requirements and the effectiveness of defect removal based on the NDE results.

The Authority intends to pursue a course of manual weld repair if the results of this program are positive.

Upon completion of this grinding program, the Authority will submit a repair plan and schedule for the NRC's review.

The draft Lucius Pitkin Report on the plug sample was received on October 20th. Therefore, allowing for inhouse review and comment, the Authority believes that by November 15, 1982 the final evaluation will be ready for submittal to the NRC. At that time, the Authority will submit the final evaluation and copies of all the various analyses performed.

WESTINGHOUSE NUCLEAR SERVICE DIVISION

ULTRASONIC TEST DATA

PLANT: INDIAN POINT

PRINTING DATE:
OCT. 7, 1982

WELD NUMBER: 31-6

DATE: 4-22-82

	INDICATION NUMBER	NOMINAL SCAN ANGLE	LENGTH	DEPTH	SUBSRF 'S'	SCAN DIR	CALCULATED LOCATION X	CALCULATED LOCATION Y	SECTION XI A/L	SECTION XI A/T	SECTION XI ACCEPT
*	1 (24)	60	1	.525	.308	5	.5	.25	.52	13.8	NO
*	2 (25)	60	1	.583	.333	2	.5	-.77	.58	15.4	NO
	3 (192)	45	.9	.583	0	2	.45	-3.34	.65	16.2	NO
	4 (193)	45	1.1	.583	.2	2	3.55	.51	.53	15.4	NO
	5 (1)	45	.87	.35	-.2	2	3.81	2.13	.4	9.7	NO
*	6 (2)	45	1.5	.233	.217	2	4.75	1.22	.16	6.1	NO
	7 (195)	45	.5	.408	0	2	4.75	-1.75	.82	11.3	NO
	8 (197)	45	1.6	.525	.2	5	5.7	1.61	.33	13.8	NO
*	9 (198)	45	.7	.408	.217	5	6.15	-.38	.58	10.7	NO
	10 (26)	60	1	.583	.25	5	6.5	.37	.58	15.4	NO
*	11 (199)	45	.3	.117	.275	5	6.15	-.77	.39	3.1	YES
	12 (200)	45	4	.525	0	2	8	-2.31	.13	14.6	NO
	13 (201)	45	6	.875	0	2	9.3	-2.59	.15	24.3	NO
	14 (3)	45	3.77	.408	.2	2	9.01	-.98	.11	10.7	NO
	15 (203)	45	1.5	.525	.2	5	10.25	-.34	.35	13.8	NO
	16 (6)	45	1.12	.35	.1	5	10.69	1.16	.31	9.2	NO
	17 (27)	60	1.5	.525	.1	5	11.25	-.2	.35	13.8	NO
	18 (4)	45	2	.408	0	2	12.87	-1.8	.2	11.3	NO
	19 (204)	45	1.3	.525	0	2	12.75	-2.11	.4	14.6	NO

* INDICATION APPEARS TO BE SUBSURFACE

NOTE: Indications are determined to be subsurface when 'S' > 1/2 depth as defined

WELD NUMBER: 31-6

INDICATION NUMBER	NOMINAL SCAN ANGLE	LENGTH	DEPTH	SUBSRF 'S'	SCAN DIR	CALCULATED LOCATION X	CALCULATED LOCATION Y	SECTION XI A/L	SECTION XI A/T	SECTION XI ACCEPT
44 (217)	45	1.4	.817	0	5	34.7	-1.19	.58	21.5	NO
45 (218)	45	1.9	.875	0	2	34.95	-6.99	.46	24.3	NO
46 (219)	45	1	.642	-.2	5	35	-2.83	.64	17.8	NO
47 (220)	45	2	1.167	-.2	5	35.5	-3.22	.58	32.4	NO
48 (11)	45	1.25	.35	.083	5	35.37	2.81	.28	9.5	NO
49 (31)	60	1.25	.467	.1	5	35.37	-.25	.37	12.3	NO
50 (14)	45	2.5	.467	0	2	36.25	-4.76	.19	13	NO
51 (221)	45	1.5	.817	0	2	36.05	-5.81	.54	22.7	NO
* 52 (32)	60	1.6	.933	.658	5	36.2	-.4	.58	24.6	NO
53 (17)	45	1.5	.408	0	5	36.75	2.38	.27	11	NO
54 (222)	45	1	.817	.2	2	36.5	-.11	.82	21.5	NO
55 (223)	45	1	.758	.2	5	37.5	1.58	.76	20	NO
56 (224)	45	2.7	.817	0	2	38.65	-1.86	.3	22.7	NO
57 (225)	45	.9	.7	.2	2	37.85	-1.15	.78	18.4	NO
* 58 (33)	60	.35	.525	1.5	2	38.08	-.77	1.5	13.8	NO
59 (18)	45	1.25	.583	0	5	38.62	1.97	.47	15.8	NO
60 (226)	45	3	.642	0	2	40	-2.12	.21	17.8	NO
* 61 (34)	60	.25	.117	.483	5	39.62	1.27	.47	3.1	YES
* 62 (15)	45	2.25	.35	.2	2	40.87	-1.45	.16	9.2	NO
63 (227)	45	2.5	.758	.2	2	41.25	.47	.3	20	NO
64 (12)	45	2.42	.35	0	5	41.54	1.97	.14	9.5	NO
65 (228)	45	1.4	.583	.217	2	41.1	.09	.42	15.4	NO
* 66 (19)	45	2	.233	.183	5	43	1.5	.12	6.1	NO
* 67 (229)	45	.9	.292	.2	2	42.85	-1.25	.32	7.7	NO

* INDICATION APPEARS TO BE SUBSURFACE

WELD NUMBER: 31-6

INDICATION NUMBER	NOMINAL SCAN ANGLE	LENGTH	DEPTH	SUBSRF 'S'	SCAN DIR	CALCULATED LOCATION X	CALCULATED LOCATION Y	SECTION XI A/L	SECTION XI A/T	SECTION XI ACCEPT
* 68 (35)	60	.6	.467	.508	2	43.2	-.66	.78	12.3	NO
69 (36)	60	.9	.467	.1	5	44.95	.25	.52	12.3	NO
70 (230)	45	1.7	.467	.2	2	45.65	-1.13	.27	12.3	NO
71 (231)	45	1.5	.467	.2	2	47.35	-1.28	.31	12.3	NO
72 (232)	45	.6	.408	.2	5	47.7	-.35	.68	10.7	NO
* 73 (16)	45	2.25	.35	.2	2	48.62	-.64	.16	9.2	NO
* 74 (37)	60	.35	.35	.858	2	50.42	-.51	1	9.2	NO
* 75 (233)	45	.4	.233	.2	2	50.6	-.67	.58	6.1	YES
76 (22)	45	1.25	.583	.2	2	52.62	-.95	.47	15.4	NO
77 (234)	45	1.3	.525	.2	2	52.65	-1.21	.4	13.8	NO
78 (235)	45	1	.525	.2	2	52.6	-.96	.52	13.8	NO
* 79 (236)	45	1	.408	.858	2	54.1	.44	.41	10.7	NO
80 (237)	45	1.3	.525	.2	5	55.15	-.54	.4	13.8	NO
81 (238)	45	1.1	.583	.2	2	55.45	-1.64	.53	15.4	NO
82 (20)	45	1	.583	0	5	56.5	2.97	.58	15.8	NO
* 83 (239)	45	.9	.408	.217	2	57.55	-.12	.45	10.7	NO
84 (240)	45	1.1	.525	.2	5	58.45	1.41	.48	13.8	NO
* 85 (23)	45	1	.35	.333	2	58.5	-.84	.35	9.2	NO
* 86 (38)	60	.5	.292	.508	2	58.65	-.77	.58	7.7	NO
* 87 (241)	45	1	.233	.2	5	59.5	1.27	.23	6.1	NO
* 88 (39)	60	.6	.233	.508	2	59.7	-.07	.39	6.1	NO
89 (21)	45	.75	.467	.1	5	60.62	.72	.62	12.3	NO
90 (242)	45	.9	.583	.2	5	61.45	-.01	.65	15.4	NO
* 91 (40)	60	.65	.408	.742	2	61.58	-1.53	.63	10.7	NO

* INDICATION APPEARS TO BE SUBSURFACE

WELD NUMBER: 31-6

INDICATION NUMBER	NOMINAL SCAN ANGLE	LENGTH	DEPTH	SUBSRF 'S'	SCAN DIR	CALCULATED LOCATION X	CALCULATED LOCATION Y	SECTION XI A/L	SECTION XI A/T	SECTION XI ACCEPT
* 92 (243)	45	.7	.233	.45	2	61.65	-.02	.33	6.1	NO
* 93 (244)	45	.7	.35	.2	2	62.15	-1.67	.5	9.2	NO
* 94 (245)	45	.3	.233	.217	2	62.45	-1.13	.78	6.1	YES
95 (246)	45	.8	.408	0	2	63.9	-1.85	.51	11.3	NO
* 96 (41)	60	.5	.35	.508	2	64.5	-1.33	.7	9.2	NO
97 (247)	45	1.5	.758	.2	2	68.05	-.48	.51	20	NO
* 98 (248)	45	.4	.233	.2	2	68.8	-1.42	.58	6.1	YES
99 (249)	45	1.5	.408	.2	2	69.55	-1.4	.27	10.7	NO
100 (250)	45	2.1	.7	0	2	72.95	-2.2	.33	19.4	NO
101 (251)	45	.8	.525	.217	2	73.9	.52	.66	13.8	NO
*102 (252)	45	.2	.233	.333	2	73.9	.4	1.17	6.1	YES
103 (253)	45	.6	.35	0	5	76.2	1.82	.58	9.7	NO
104 (254)	45	.8	.467	0	2	78.7	-1.93	.58	13	NO
105 (255)	45	1	.467	.217	2	82.3	0	.47	12.3	NO
*106 (42)	60	1.15	.35	.392	2	82.83	-1.72	.3	9.2	NO
*107 (256)	45	1	.292	.242	5	82.9	1.14	.29	7.7	NO
108 (257)	45	2	.758	.2	2	84.3	-.43	.38	20	NO
109 (258)	45	1.3	.817	.2	2	87.65	-.56	.63	21.5	NO
110 (43)	60	0	0	.2	2	87.25	-2.02	SPOT		YES
111 (259)	45	2	.7	.2	2	93.8	-.8	.35	18.4	NO
*112 (260)	45	1	.292	.2	5	93.4	1.75	.29	7.7	NO
113 (261)	45	1	.7	.2	2	96.5	.05	.7	18.4	NO
114 (262)	45	1.3	.583	.217	2	96.65	.04	.45	15.4	NO
115 (263)	45	1.2	.758	.2	2	103.9	-.03	.63	20	NO

* INDICATION APPEARS TO BE SUBSURFACE

WELD NUMBER: 31-6

INDICATION NUMBER	NOMINAL SCAN ANGLE	LENGTH	DEPTH	SUBSRF 'S'	SCAN DIR	CALCULATED LOCATION X	CALCULATED LOCATION Y	SECTION XI A/L	SECTION XI A/T	SECTION XI ACCEPT
*116 (264)	45	1.1	.292	.2	5	104.35	1.5	.27	7.7	NO
*117 (44)	60	2	.933	.483	5	106.5	.26	.47	24.6	NO
118 (265)	45	1.4	.583	-.2	5	106.6	-2.81	.42	16.2	NO
119 (266)	45	1.6	.817	0	2	107.8	-4.51	.51	22.7	NO
120 (267)	45	1	.525	-.2	2	108.5	2.29	.52	14.6	NO
*121 (45)	60	1.9	.525	.658	5	109.05	.88	.28	13.8	NO
*123 (46)	60	.5	.292	1.208	2	108.65	-1.66	.58	7.7	NO
123 (268)	45	.6	.35	0	5	108.8	4.27	.58	9.7	NO
*124 (47)	60	1.15	.642	.975	2	109.68	-1.18	.56	16.9	NO
*125 (269)	45	2.1	.175	.367	2	110.35	-3.65	.08	4.9	NO
126 (270)	45	1.2	.817	-.2	2	110	2.49	.68	22.7	NO
*127 (273)	45	.5	.175	.2	5	119.25	1.14	.35	4.6	YES
128 (274)	45	1	.467	.217	2	119.5	-.5	.47	12.3	NO
*129 (271)	45	.3	.117	.2	5	120.15	.91	.39	3.1	YES
*130 (275)	45	.6	.233	.2	5	121.1	1.17	.39	6.1	NO
131 (276)	45	.8	.467	.217	2	121.7	-.15	.58	12.3	NO
132 (272)	45	.9	.467	.217	2	122.45	-.45	.52	12.3	NO
133 (277)	45	1.2	.875	.2	2	163.7	.01	.73	23	NO
134 (48)	60	1.9	.408	.1	5	165.45	1.14	.21	10.7	NO
*135 (278)	45	1	.292	.567	2	166.5	-.36	.29	7.7	NO
136 (279)	45	.9	.642	.2	2	167.55	-.17	.71	16.9	NO
*137 (49)	60	.6	.292	.425	5	169.2	.52	.49	7.7	NO
*138 (280)	45	1	.35	.333	2	169.9	.99	.35	9.2	NO
139 (50)	60	.8	.467	.1	5	170	1.3	.58	12.3	NO

* INDICATION APPEARS TO BE SUBSURFACE

WELD NUMBER: 31-6

INDICATION NUMBER	NOMINAL SCAN ANGLE	LENGTH	DEPTH	SUBSRF 'S'	SCAN DIR	CALCULATED LOCATION X	CALCULATED LOCATION Y	SECTION XI A/L	SECTION XI A/T	SECTION XI ACCEPT
140 (281)	45	1	.7	0	5	170.5	2.9	.7	19.4	NO
141 (282)	45	.9	.35	0	5	171.05	2.97	.39	9.7	NO
142 (283)	45	1.7	.525	.2	2	172.15	-.06	.31	13.8	NO
*143 (284)	45	.8	.292	.275	2	171.9	-.17	.36	7.7	NO
*144 (51)	60	.6	.408	.508	2	177.3	-.48	.68	10.7	NO
145 (285)	45	1.3	.35	0	2	178.65	1.73	.27	9.2	NO
146 (177)	45	.5	.292	.1	5	180.65	1.74	.58	7.7	NO
*147 (178)	45	1.1	.408	.217	2	182.45	0	.37	10.7	NO
148 (179)	45	.7	.35	.1	5	184.75	1.1	.5	9.2	NO
*149 (180)	45	.5	.35	.217	2	186.25	.2	.7	9.2	NO
*150 (181)	45	1.1	.35	.275	2	188.05	.07	.32	9.2	NO
*151 (52)	60	1.1	.642	.6	5	215.45	.01	.58	16.9	NO
*152 (53)	60	0	0	.6	2	218.25	-1.7	SPOT		YES
153 (183)	45	.9	.467	0	2	218.95	-3.01	.52	13	NO
154 (184)	45	.5	.408	.017	8	220.2	-7.75	.82	11.3	NO
155 (182)	45	2.5	.467	0	7	220.91	-6.15	.19	13	NO
156 (185)	45	.7	.525	.1	5	230.15	1.64	.75	13.8	NO
157 (186)	45	.9	.408	0	5	230.85	1.83	.45	11	NO
158 (187)	45	1.5	.525	.217	2	231.35	.04	.35	13.8	NO
159 (54)	60	.5	.817	.192	2	233.15	-1.84	1.63	22.7	NO
160 (188)	45	.8	.467	.1	5	234.2	.56	.58	12.3	NO
161 (189)	45	.6	.408	.2	2	234.6	-.78	.68	10.7	NO
162 (190)	45	1.3	.525	.1	5	236.45	1.29	.4	13.8	NO
*163 (191)	45	.9	.408	.217	2	236.35	-.7	.45	10.7	NO

* INDICATION APPEARS TO BE SUBSURFACE

WELD NUMBER: 31-6

INDICATION NUMBER	NOMINAL SCAN ANGLE	LENGTH	DEPTH	SUBSRF 'S'	SCAN DIR	CALCULATED LOCATION X	Y	A/L	SECTION XI A/T	ACCEPT
164 (76)	45	1.5	.35	0	5	262	3.52	.23	9.5	NO
165 (55)	60	0	0	0	2	274.75	-.01	SPOT		YES
166 (77)	45	0	.467	0	7	276.39	3.52	SPOT		YES
167 (78)	45	.75	.408	.1	5	298.12	.98	.54	10.7	NO
*168 (57)	60	.25	.292	.533	2	298.37	.06	1.17	7.7	NO
*169 (56)	60	.4	.408	.275	2	298.8	-1.33	1.02	10.7	NO
170 (79)	45	2	.525	.1	5	300.5	.69	.26	13.8	NO
*171 (80)	45	.75	.35	.217	2	301.87	-.72	.47	9.2	NO
*172 (81)	45	1.75	.117	.1	5	322.62	1.03	.07	3.1	NO
*173 (58)	60	1	.467	.567	2	324	-1.54	.47	12.3	NO
174 (82)	45	2.5	.992	.1	5	326.75	1.68	.4	26.1	NO
*175 (59)	60	1.15	.583	.333	2	326.68	-1.4	.51	15.4	NO
176 (83)	45	.65	.467	.1	5	330.57	1.61	.72	12.3	NO
177 (85)	45	1	.642	0	5	335	-1.23	.64	16.9	NO
*178 (60)	60	.4	.408	.25	5	335.8	-.24	1.02	10.7	NO
179 (86)	45	1.75	.7	0	5	336.87	3.28	.4	18.9	NO
180 (84)	45	0	.583	0	7	336.53	1.61	SPOT		YES
181 (87)	45	1	.408	0	5	337.9	3.88	.41	11	NO
*182 (61)	60	.65	.35	1.475	5	338.07	-.88	.54	9.2	NO
183 (88)	45	1.25	.525	0	5	339.62	1.94	.42	14.2	NO
*184 (62)	60	2	.292	.767	5	351.25	1.29	.15	7.7	NO
*185 (89)	45	.75	.233	.183	5	351.12	1.3	.31	6.1	NO
*186 (92)	45	.85	.35	.333	2	352.32	-.42	.41	9.2	NO
*187 (63)	60	.9	.35	.425	2	352.45	-2.16	.39	9.7	NO

* INDICATION APPEARS TO BE SUBSURFACE

WELD NUMBER: 31-6

INDICATION NUMBER	NOMINAL SCAN ANGLE	LENGTH	DEPTH	SUBSRF 'S'	SCAN DIR	CALCULATED LOCATION X	CALCULATED LOCATION Y	SECTION XI A/L	SECTION XI A/T	SECTION XI ACCEPT
188 (93)	45	2.2	.583	0	2	354	-2.65	.27	16.2	NO
189 (91)	45	.35	.292	.1	5	354.43	1.19	.83	7.7	NO
190 (90)	45	.85	.35	.1	5	354.68	1.47	.41	9.2	NO
*191 (95)	45	1.25	.408	.333	2	355.62	-.25	.33	10.7	NO
192 (94)	45	1.65	.292	.1	5	355.93	1.72	.18	7.7	NO
193 (96)	45	1	.467	.2	2	356.5	-.14	.47	12.3	NO
*194 (98)	45	.87	.233	.275	2	361.82	-.16	.27	6.1	NO
*195 (97)	45	.75	.35	.333	2	365.62	-.16	.47	9.2	NO
196 (99)	45	.75	.292	0	2	366	1.72	.39	7.7	NO
197 (100)	45	3.13	.583	.217	2	376.32	.09	.19	15.4	NO
*198 (64)	60	.7	.467	.95	2	375.75	-3.69	.67	13	NO
*199 (66)	60	0	0	.95	5	376.4	1.34	SPOT		YES
*200 (65)	60	.8	.467	.333	2	378	-.72	.58	12.3	NO
*201 (101)	45	.75	.408	.275	2	378.5	.25	.54	10.7	NO
*202 (102)	45	.88	.35	.275	2	382.94	.15	.4	9.2	NO
*203 (103)	45	1	.408	.275	2	384.25	-.06	.41	10.7	NO
204 (104)	45	2.37	.525	.2	2	385.57	.21	.22	13.8	NO
205 (105)	45	1.62	.525	.2	2	389.69	.14	.32	13.8	NO
*206 (108)	45	.87	.408	.217	2	392.32	.5	.47	10.7	NO
207 (109)	45	1.5	.467	.2	2	392.75	.05	.31	12.3	NO
208 (106)	45	1.12	.233	.083	5	393.94	1.94	.21	6.3	NO
209 (110)	45	1.88	.233	.025	5	394.94	2.13	.12	6.3	NO
210 (119)	45	1.75	.583	0	2	397.37	-3.07	.33	16.2	NO
*211 (111)	45	.5	.117	.142	5	397	2.01	.23	3.2	YES

* INDICATION APPEARS TO BE SUBSURFACE

WELD NUMBER: 31-6

INDICATION NUMBER	NOMINAL SCAN ANGLE	LENGTH	DEPTH	SUBSRF 'S'	SCAN DIR	CALCULATED LOCATION X	CALCULATED LOCATION Y	SECTION XI A/L	SECTION XI A/T	SECTION XI ACCEPT
212 (120)	45	1.62	.467	.2	2	398.94	-.08	.29	12.3	NO
*213 (112)	45	1	.175	.125	5	399.5	1.16	.17	4.6	NO
214 (121)	45	.88	.467	.2	2	400.94	-.08	.53	12.3	NO
215 (122)	45	.75	.408	.2	2	403.5	-.23	.54	10.7	NO
216 (113)	45	.87	.408	.1	5	403.57	.5	.47	10.7	NO
217 (107)	45	1	.467	.2	2	405	.3	.47	12.3	NO
218 (123)	45	.9	.467	.2	2	408.45	-.69	.52	12.3	NO
219 (114)	45	.88	.292	.1	5	409.19	1.38	.33	7.7	NO
220 (124)	45	1.15	.467	.2	2	410.68	-.26	.41	12.3	NO
221 (115)	45	.88	.292	0	5	412.69	2.01	.33	7.9	NO
222 (116)	45	1.37	.292	0	5	414.31	2.13	.21	7.9	NO
*223 (125)	45	1.75	.35	.2	2	414.87	.75	.2	9.2	NO
*224 (67)	60	1.35	.583	.892	5	415.57	1.2	.43	15.4	NO
225 (117)	45	1.37	.35	0	5	416.06	2.29	.26	9.5	NO
226 (126)	45	2	.467	.2	2	416.75	.94	.23	12.3	NO
227 (68)	60	4.1	.758	.2	2	417.95	.19	.18	20	NO
228 (127)	45	2.5	.408	.2	2	418.75	.57	.16	10.7	NO
229 (118)	45	1.75	.35	.025	5	418.87	1.88	.2	9.5	NO
230 (128)	45	2.25	.525	.2	2	421.12	-.17	.23	13.8	NO
231 (132)	45	.4	.525	0	5	421.2	2.19	1.31	14.2	NO
232 (133)	45	1.85	.292	.1	5	422.18	1.07	.16	7.7	NO
233 (129)	45	2	.525	.2	2	423.75	-.09	.26	13.8	NO
234 (130)	45	1.25	.583	.2	2	426.62	-.4	.47	15.4	NO
235 (131)	45	2.25	.583	.2	2	429.62	-.67	.26	15.4	NO

* INDICATION APPEARS TO BE SUBSURFACE

WELD NUMBER: 31-6

INDICATION NUMBER	NOMINAL SCAN ANGLE	LENGTH	DEPTH	SUBSRF 'S'	SCAN DIR	CALCULATED LOCATION X	CALCULATED LOCATION Y	SECTION XI A/L	SECTION XI A/T	SECTION XI ACCEPT
*236 (134)	45	.7	.292	.2	2	433.25	.2	.42	7.7	NO
*237 (141)	45	.65	.175	.3	5	433.57	1.47	.27	4.6	NO
238 (135)	45	2	.933	.2	2	435.5	-.13	.47	24.6	NO
*239 (69)	60	.85	.292	.2	2	435.32	.23	.34	7.7	NO
240 (137)	45	1.65	.408	.2	2	435.93	-.98	.25	10.7	NO
241 (136)	45	.85	.525	.2	2	437.68	-.14	.62	13.8	NO
242 (138)	45	1.4	.642	.2	2	438.7	-.28	.46	16.9	NO
243 (139)	45	1.6	.7	.2	2	441.3	-.28	.44	18.4	NO
244 (140)	45	2	.583	.2	2	443	-.12	.29	15.4	NO
245 (142)	45	1.15	.583	.2	2	445.32	-.57	.51	15.4	NO
246 (143)	45	3.6	.7	.2	2	447.8	-.76	.19	18.4	NO
247 (147)	45	.85	.467	0	2	446.82	-7.51	.55	13	NO
248 (144)	45	1.5	.583	.2	2	450.5	-.82	.39	15.4	NO
249 (145)	45	1.1	.583	.2	2	451.95	-.75	.53	15.4	NO
250 (146)	45	1.4	.583	.2	2	453.7	-.75	.42	15.4	NO
251 (149)	45	1.5	.467	.1	5	455.25	1.53	.31	12.3	NO
252 (150)	45	3	.583	0	2	456.75	-2.82	.19	16.2	NO
*253 (70)	60	.5	.292	1.533	5	455.65	-.2	.58	7.7	NO
*254 (72)	60	.6	.467	.392	2	455.7	-.6	.78	12.3	NO
255 (148)	45	2.65	.525	0	2	457.07	-3.42	.2	14.6	NO
256 (151)	45	1.9	.467	.1	5	456.95	1.41	.25	12.3	NO
257 (152)	45	1.2	.467	.1	5	459.5	1.51	.39	12.3	NO
258 (153)	45	1.1	.467	.2	2	462.05	.06	.42	12.3	NO
259 (155)	45	.65	.408	.075	2	462.43	-7.31	.63	11.3	NO

* INDICATION APPEARS TO BE SUBSURFACE

WELD NUMBER: 31-6

INDICATION NUMBER	NOMINAL SCAN ANGLE	LENGTH	DEPTH	SUBSRF 'S'	SCAN DIR	CALCULATED LOCATION X	CALCULATED LOCATION Y	SECTION XI A/L	SECTION XI A/T	SECTION XI ACCEPT
260 (154)	45	1	.408	.2	2	464.1	.39	.41	10.7	NO
261 (156)	45	1.25	.408	.1	5	465.12	1.38	.33	10.7	NO
262 (157)	45	1.85	.583	.2	2	465.82	-.37	.32	15.4	NO
*263 (71)	60	.6	.175	.767	5	465.8	.44	.29	4.6	NO
264 (158)	45	1.6	.583	0	2	467.2	-3.25	.36	16.2	NO
265 (159)	45	.5	.525	.217	2	468.65	-.86	1.05	13.8	NO
266 (160)	45	.7	.583	.2	2	469.15	-.22	.83	15.4	NO
267 (161)	45	1.4	.408	0	2	472.3	-1.93	.29	11.3	NO
268 (162)	45	3	.408	0	2	477.8	-1.93	.14	11.3	NO
269 (163)	45	1.3	.583	.2	2	480.45	.08	.45	15.4	NO
*270 (164)	45	1.5	.292	.2	2	481.85	.28	.19	7.7	NO
271 (165)	45	1.5	.408	.1	5	484.35	1.03	.27	10.7	NO
*272 (166)	45	.8	.292	.217	2	484.7	.31	.36	7.7	NO
273 (167)	45	1.4	.408	.2	2	487.2	.57	.29	10.7	NO
274 (168)	45	3.2	.583	0	2	488.9	-2.02	.18	16.2	NO
*275 (169)	45	1.7	.35	.2	2	488.95	.6	.21	9.2	NO
276 (170)	45	1.6	.467	.2	2	489.1	.24	.29	12.3	NO
277 (73)	60	.75	.583	.192	5	489.62	-.36	.78	15.4	NO
278 (74)	60	.75	.583	0	2	490.87	-2.58	.78	16.2	NO
279 (171)	45	1.8	.525	.2	2	491.9	.06	.29	13.8	NO
280 (172)	45	1.4	.408	.2	2	494.1	.17	.29	10.7	NO
281 (173)	45	1.6	.583	.2	2	494.8	.53	.36	15.4	NO
282 (174)	45	1.2	.467	.2	2	494.9	.79	.39	12.3	NO
*283 (75)	60	1.35	.292	.2	2	495.07	.18	.22	7.7	NO

* INDICATION APPEARS TO BE SUBSURFACE

WELD NUMBER: 31-6

INDICATION NUMBER	NOMINAL SCAN ANGLE	LENGTH	DEPTH	SUBSRF 'S'	SCAN DIR	CALCULATED LOCATION X	CALCULATED LOCATION Y	SECTION XI A/L	SECTION XI A/T	SECTION XI ACCEPT
284 (175)	45	.6	.408	0	2	496.6	-2.63	.68	11.3	NO
285 (176)	45	1.2	.525	.2	2	500.7	-.59	.44	13.8	NO

WESTINGHOUSE NUCLEAR SERVICE DIVISION

ULTRASONIC TEST DATA

PLANT: INDIAN POINT

PRINTING DATE:
OCTOBER 7, 1982

WELD NUMBER: LOOP 32-6

DATE: DATE 4-9-82

INDICATION NUMBER	NOMINAL SCAN ANGLE	LENGTH	DEPTH	SUBSRF 'S'	SCAN DIR	CALCULATED LOCATION X	CALCULATED LOCATION Y	SECTION XI A/L	SECTION XI A/T	SECTION XI ACCEPT
* 1 (82)	60	1.13	.817	1.617	5	3.69	1.17	.72	21.5	NO
2 (134)	45	.4	.233	0	2	3.5	-3.14	.58	6.5	NO
3 (80)	60	1.75	1.167	.483	2	4.25	-2.18	.67	32.4	NO
4 (81)	60	1.12	.583	.2	5	4.25	-.37	.52	15.4	NO
5 (135)	45	.8	.233	0	2	5.1	-3.14	.29	6.5	NO
6 (79)	60	4.75	1.225	.6	2	8.25	-3.47	.26	34	NO
7 (149)	45	1.5	.467	.2	5	7.85	.51	.31	12.3	NO
8 (76)	60	1.75	1.867	.133	2	8.12	-3.02	1.07	51.9	NO
* 9 (136)	45	.8	.292	.333	2	8	-1.26	.36	7.7	NO
10 (78)	60	2.12	.758	.2	5	10.06	-.53	.36	20	NO
11 (137)	45	.2	.233	0	2	10	-3.64	1.17	6.5	NO
* 12 (150)	45	2.7	.233	.2	5	11.55	-.86	.09	6.1	NO
13 (77)	60	1.5	.817	.2	5	14.37	-.66	.54	21.5	NO
* 14 (151)	45	.7	.175	.333	5	14.55	-1.15	.25	4.6	NO
15 (75)	60	2.75	1.05	.2	5	19.38	.21	.38	27.6	NO
* 16 (139)	45	.2	.117	.392	5	19	-.97	.58	3.1	YES
17 (103)	60	2.38	.817	.2	5	25.75	-.45	.34	21.5	NO
18 (138)	45	1.3	.467	0	2	28.05	-4.26	.36	13	NO
19 (102)	60	.62	.875	.333	5	30.06	.22	1.41	23	NO

* INDICATION APPEARS TO BE SUBSURFACE

WELD NUMBER: LOOP 32-6

INDICATION NUMBER	NOMINAL SCAN ANGLE	LENGTH	DEPTH	SUBSRF 'S'	SCAN DIR	CALCULATED LOCATION X	CALCULATED LOCATION Y	A/L	SECTION XI A/T	SECTION XI ACCEPT
20 (210)	60	.25	.7	.2	5	30.13	-.73	2.8	18.4	NO
21 (209)	60	1.13	.642	0	5	34.18	-1.85	.57	17,8	NO
22 (140)	45	1.6	.7	.2	5	37.4	-.57	.44	18.4	NO
23 (141)	45	1	.525	0	5	39.4	-9.06	.52	14.5	NO
24 (104)	45	.7	.583	0	2	42.15	-4.32	.83	16.2	NO
* 25 (142)	45	.3	.117	2.317	8	42.58	6.65	.39	3.2	YES
26 (143)	45	1.4	.467	.2	5	47.9	-.14	.33	12.3	NO
* 27 (208)	60	.75	.408	1.5	5	47.81	.94	.54	10.7	NO
28 (105)	45	.5	.467	0	2	48.25	-7.41	.93	13	NO
29 (106)	45	.3	.175	0	2	49.95	-5.81	.58	4.9	NO
30 (144)	45	.3	.175	-.133	5	50.25	-5.23	.58	4.9	NO
31 (145)	45	.6	.467	0	5	52.8	-11.44	.78	13	NO
32 (146)	45	.7	.35	0	5	55.55	-6.6	.5	9.7	NO
33 (147)	45	1.5	.642	0	5	56.15	-6.6	.43	17.8	NO
34 (206)	60	10.38	.583	.2	5	60.81	-1.31	.06	15.4	NO
* 35 (207)	60	1.88	.35	1.675	5	57.38	.67	.19	9.2	NO
36 (107)	45	1.5	.758	0	2	57.25	-7.96	.51	21.1	NO
37 (108)	45	1	.408	0	2	57.6	-7.48	.41	11.3	NO
* 38 (205)	60	1.81	1.05	1.383	5	61.85	1.74	.58	27.6	NO
39 (148)	45	1.5	.7	0	5	62.35	-6.37	.47	19.4	NO
40 (109)	45	1.4	.758	-.2	5	62.6	-5.99	.54	21.1	NO
41 (110)	45	1.4	.875	0	2	62.8	-7.27	.62	24.3	NO
42 (111)	45	3	.7	0	5	68.8	2.83	.23	19.4	NO
43 (112)	45	1.6	.525	0	5	69.1	-7.56	.33	14.6	NO

* INDICATION APPEARS TO BE SUBSURFACE

WELD NUMBER: LOOP 32-6

INDICATION NUMBER	NOMINAL SCAN ANGLE	LENGTH	DEPTH	SUBSRF 'S'	SCAN DIR	CALCULATED LOCATION X	CALCULATED LOCATION Y	SECTION XI A/L	SECTION XI A/T	SECTION XI ACCEPT
44 (113)	45	2.7	.525	0	2	69.65	-2.99	.19	14.6	NO
45 (114)	45	.1	.35	.067	2	68.75	1.43	3.5	9.2	NO
* 46 (204)	60	5.62	.292	2.142	2	73.31	-1.74	.05	7.7	NO
47 (115)	45	1.1	.35	0	2	72.95	-2.9	.32	9.7	NO
* 48 (203)	60	2.06	.175	2.258	5	79.03	.47	.08	4.6	NO
* 49 (116)	45	1	.35	.217	2	80.3	-.72	.35	9.2	NO
* 50 (202)	60	1.69	1.108	.567	2	82.84	-.86	.66	29.2	NO
* 51 (201)	60	1.75	1.342	.8	2	85.87	-.99	.77	35.3	NO
* 52 (117)	45	.7	.292	.3	5	96.65	1.53	.42	7.7	NO
53 (118)	45	1.1	.408	.042	2	98.95	-1.98	.37	11.3	NO
54 (119)	45	1.1	.408	.2	2	122.35	.57	.37	10.7	NO
55 (120)	45	.6	.35	0	5	122.3	2.45	.58	9.7	NO
* 56 (121)	45	.8	.35	.2	2	122.4	.85	.44	9.2	NO
57 (199)	60	1.13	1.4	.133	2	168.93	-1.88	1.24	38.9	NO
58 (200)	60	1.38	1.283	.45	5	170.31	.99	.93	33.8	NO
59 (122)	45	3.5	.525	.2	5	176.75	1.74	.15	13.8	NO
* 60 (196)	60	3	.992	.625	2	176.75	-1.35	.33	26.1	NO
61 (123)	45	1.1	.7	-.2	2	176.35	3.37	.64	19.4	NO
62 (124)	45	1.1	.583	0	2	176.35	-3.92	.53	16.2	NO
63 (125)	45	1.5	.467	0	2	177.15	5.94	.31	13	NO
* 64 (198)	60	2.75	.233	1.533	5	177.99	2.17	.08	6.5	NO
65 (126)	45	.6	.642	.217	2	177.3	-.57	1.07	16.9	NO
* 66 (197)	60	2.88	.7	1.733	2	179.06	-1.09	.24	18.4	NO
67 (127)	45	1.3	.408	.2	5	183.15	1.63	.31	10.7	NO

* INDICATION APPEARS TO BE SUBSURFACE

WELD NUMBER: LOOP 32-6

INDICATION NUMBER	NOMINAL SCAN ANGLE	LENGTH	DEPTH	SUBSRF 'S'	SCAN DIR	CALCULATED LOCATION X	CALCULATED LOCATION Y	SECTION XI A/L	SECTION XI A/T	SECTION XI ACCEPT
* 68 (195)	60	2.38	.758	.425	2	185.81	-2.15	.32	21.1	NO
* 69 (129)	45	.9	.408	.333	2	186.15	-.12	.45	10.7	NO
* 70 (128)	45	1.2	.292	.308	7	188.31	-5.9	.24	8.1	NO
71 (130)	45	.9	.35	0	5	189.15	2.1	.39	9.7	NO
72 (132)	45	1.2	.467	0	8	201.71	2.7	.39	13	NO
73 (131)	45	4.3	.642	.2	2	207.55	.05	.15	16.9	NO
74 (133)	45	1.4	.525	.2	5	207.2	.99	.38	13.8	NO
* 75 (24)	45	.6	.175	.242	5	218.3	.06	.29	4.6	NO
* 76 (25)	45	.9	.292	.2	2	220.65	-.87	.32	7.7	NO
77 (26)	45	.5	.408	.2	5	222.15	.43	.82	10.7	NO
78 (192)	60	.5	.992	0	2	222.75	-3.09	1.98	27.5	NO
79 (27)	45	1	.7	0	2	224.1	-3.68	.7	19.4	NO
* 80 (28)	45	.9	.35	.8	5	224.55	-.23	.39	9.2	NO
81 (194)	60	1.87	1.342	.217	5	225.18	-.19	.72	35.3	NO
82 (191)	60	7.37	1.633	0	2	232.18	-1.85	.22	45.4	NO
83 (29)	45	1.4	.642	.2	2	232.4	.25	.46	16.9	NO
* 84 (193)	60	2.87	.408	.767	5	233.68	.52	.14	10.7	NO
* 85 (190)	60	1.5	.467	.825	5	234.12	1.12	.31	12.3	NO
86 (30)	45	.8	.583	0	5	235.5	2.32	.73	16.2	NO
87 (31)	45	1	.583	.2	5	236.9	.92	.58	15.4	NO
88 (188)	60	.87	1.225	.2	2	238.18	-.99	1.41	32.2	NO
89 (33)	45	.5	.583	0	2	239.85	-3.37	1.17	16.2	NO
90 (189)	60	.5	.817	.2	5	240.25	-.51	1.63	21.5	NO
91 (10)	45	1	.758	0	2	242.1	-3.56	.76	21.1	NO

* INDICATION APPEARS TO BE SUBSURFACE

WELD NUMBER: LOOP 32-6

INDICATION NUMBER	NOMINAL SCAN ANGLE	LENGTH	DEPTH	SUBSRF 'S'	SCAN DIR	CALCULATED LOCATION X	CALCULATED LOCATION Y	SECTION XI A/L	SECTION XI A/T	SECTION XI ACCEPT
92 (32)	45	.6	.467	0	7	241.84	1.2	.78	12.3	NO
93 (35)	45	1.3	.7	0	8	243.08	-.95	.54	18.4	NO
* 94 (11)	45	.7	.292	.2	2	244.55	-.82	.42	7.7	NO
* 95 (34)	45	2.2	.35	.2	5	246	.95	.16	9.2	NO
96 (36)	45	2.7	.583	.2	5	250.25	.42	.22	15.4	NO
97 (187)	60	2.38	1.167	.2	2	251.06	-1.44	.49	30.7	NO
* 98 (12)	45	.4	.233	.2	2	250.4	-.59	.58	6.1	YES
99 (13)	45	1.7	.408	0	2	262.55	-2.98	.24	11.3	NO
100 (186)	60	2.38	1.283	.2	5	264.31	.73	.54	33.8	NO
*101 (185)	60	.88	.933	1.267	5	264.06	.59	1.06	24.6	NO
102 (14)	45	.8	.7	0	2	264.8	-6.53	.87	19.4	NO
103 (37)	45	1.1	.7	-.2	5	265.45	-5.27	.64	19.4	NO
104 (15)	45	.8	.408	0	2	274.5	-2.48	.51	11.3	NO
105 (16)	45	.7	.583	.2	5	284.75	.47	.83	15.4	NO
106 (184)	60	2.25	1.167	.308	2	285.87	-2.62	.52	32.4	NO
107 (17)	45	.5	.292	0	2	288.65	-5.47	.58	8.1	NO
*108 (18)	45	3	.35	.2	5	290.4	.85	.12	9.2	NO
109 (183)	60	2.63	1.692	.742	5	290.69	1.32	.64	44.5	NO
110 (181)	60	1.25	.758	.333	2	292.12	-1.18	.61	20	NO
111 (180)	60	.75	.875	.2	2	292.49	.33	1.17	23	NO
*112 (179)	60	5.37	.7	.358	2	296.69	.83	.13	18.4	NO
113 (19)	45	1.5	.642	0	5	294.75	2	.49	17.8	NO
114 (182)	60	1.13	.875	0	5	295.19	2.48	.77	24.3	NO
115 (178)	60	5.5	2.742	0	2	298.75	-3.23	.5	76.2	NO

* INDICATION APPEARS TO BE SUBSURFACE

WELD NUMBER: LOOP 32-6

INDICATION NUMBER	NOMINAL SCAN ANGLE	LENGTH	DEPTH	SUBSRF 'S'	SCAN DIR	CALCULATED LOCATION X	CALCULATED LOCATION Y	SECTION XI A/L	SECTION XI A/T	SECTION XI ACCEPT
116 (20)	45	2.5	.525	.2	2	298.35	-.54	.21	13.8	NO
117 (21)	45	1.5	.35	0	5	299.35	1.95	.23	9.7	NO
*118 (22)	45	.9	.408	1.467	2	301.05	.05	.45	10.7	NO
119 (177)	60	.81	.7	.217	5	309.41	-.52	.86	18.4	NO
120 (23)	45	2.3	.467	0	2	316.75	-2.91	.2	13	NO
121 (4)	45	.7	.525	0	2	339.75	-2.18	.75	14	NO
122 (7)	45	3	1.167	0	2	342	-5.77	.39	31.5	NO
123 (176)	60	.75	.642	0	2	340.87	-3.58	.86	17.8	NO
124 (5)	45	2.2	.292	0	2	342.2	-1.81	.13	7.8	NO
125 (1)	45	.5	.408	0	7	341.38	-.65	.82	10.6	NO
126 (175)	60	.56	.467	0	2	342.28	-2.55	.83	13	NO
127 (6)	45	.5	.292	0	8	342.47	-1.65	.58	7.9	NO
128 (8)	45	.8	.525	0	2	345.5	-5.04	.66	14.2	NO
129 (2)	45	1.3	.817	0	7	346.46	-3.75	.63	22.1	NO
130 (53)	45	1.6	.817	0	8	347.19	-1.3	.51	21.5	NO
131 (3)	45	.5	.408	0	7	349.38	-3.85	.82	10.9	NO
132 (54)	45	1.9	.583	0	8	349.57	-.95	.31	15.4	NO
133 (55)	45	1	.642	0	2	353.1	-2.15	.64	17.8	NO
134 (9)	45	1.1	.583	0	2	354.35	-3.97	.53	15.8	NO
135 (56)	45	1.7	.583	0	2	354.85	-1.97	.34	16.2	NO
*136 (57)	45	.9	.117	.217	5	355.45	-.35	.13	3.1	NO
*137 (58)	45	1	.35	.2	5	356.9	-.4	.35	9.2	NO
138 (59)	45	3.5	.467	0	2	358.45	-1.86	.13	13	NO
*139 (60)	45	1.5	.35	.217	5	359.95	.02	.23	9.2	NO

* INDICATION APPEARS TO BE SUBSURFACE

WELD NUMBER: LOOP 32-6

INDICATION NUMBER	NOMINAL SCAN ANGLE	LENGTH	DEPTH	SUBSRF 'S'	SCAN DIR	CALCULATED LOCATION X	CALCULATED LOCATION Y	SECTION XI A/L	SECTION XI A/T	SECTION XI ACCEPT
140 (61)	45	4.9	.642	0	2	367.95	-2.7	.13	17.8	NO
141 (62)	45	.75	.35	0	8	367.85	-1.38	.47	9.2	NO
142 (73)	60	1.94	1.283	.275	2	373.09	-1.21	.66	33.8	NO
143 (64)	45	1.1	.467	0	5	373.05	1.86	.42	13	NO
*144 (63)	45	1.5	.467	.275	2	373.35	.46	.31	12.3	NO
*145 (65)	45	1	.175	1.175	5	374.4	1.62	.17	4.6	NO
146 (38)	45	2.4	.525	.2	5	377.8	1.49	.22	13.8	NO
147 (72)	60	1.5	1.167	.425	2	377.75	-2.64	.78	32.4	NO
148 (74)	60	1.19	1.05	.333	5	378.41	.57	.88	27.6	NO
*149 (39)	45	1.4	.35	.217	2	378.9	.18	.25	9.2	NO
150 (71)	60	1.13	.875	0	2	378.94	-1.89	.77	24.3	NO
151 (40)	45	3.1	.875	0	2	379.95	-2.02	.28	24.3	NO
152 (41)	45	1.8	.408	.2	5	382	1.63	.23	10.7	NO
153 (43)	45	.65	.7	0	8	382.58	-.93	1.08	18.4	NO
154 (42)	45	2.9	.7	.2	2	384.45	.37	.24	18.4	NO
*155 (69)	60	1.19	.758	.45	2	389.09	-.65	.64	20	NO
*156 (44)	45	3.7	.35	.2	5	390.55	1.15	.09	9.2	NO
157 (48)	45	9	.525	.2	2	393.6	.26	.06	13.8	NO
*158 (45)	45	1.3	.292	.2	5	392.85	-.03	.22	7.7	NO
*159 (47)	45	2.2	.35	.2	5	396.8	1.45	.16	9.2	NO
160 (51)	45	10.8	.583	0	2	402.3	-2.17	.05	16.2	NO
161 (68)	60	1.87	.992	.275	2	397.94	-.23	.53	26.1	NO
162 (46)	45	2.3	.758	0	7	398.59	.65	.33	20	NO
163 (67)	60	4.87	1.283	.2	5	401.62	.16	.26	33.8	NO

* INDICATION APPEARS TO BE SUBSURFACE

WELD NUMBER: LOOP 32-6

INDICATION NUMBER	NOMINAL SCAN ANGLE	LENGTH	DEPTH	SUBSRF 'S'	SCAN DIR	CALCULATED LOCATION X	CALCULATED LOCATION Y	SECTION XI A/L	SECTION XI A/T	SECTION XI ACCEPT
164 (49)	45	3.25	.7	0	8	399.73	1.12	.22	18.4	NO
165 (70)	60	.38	.292	.067	7	400	1.44	.77	7.7	NO
166 (66)	60	1.86	1.517	.275	5	404.13	1.01	.82	39.9	NO
*167 (50)	45	1.5	.292	.242	5	405.15	1.47	.19	7.7	NO
168 (101)	60	.75	1.167	.2	2	409.12	-.21	1.56	30.7	NO
*169 (167)	45	4.5	.467	.275	2	413.15	.51	.1	12.3	NO
170 (100)	60	1.07	1.167	.2	2	412.66	.07	1.09	30.7	NO
171 (52)	45	1.5	.408	.2	5	414.25	.93	.27	10.7	NO
172 (99)	60	2.93	1.283	.2	2	429.41	-1.6	.44	33.8	NO
173 (168)	45	3	.467	.217	2	430.5	-1.23	.16	12.3	NO
174 (97)	60	.62	.7	.2	2	432.31	-.04	1.13	18.4	NO
*175 (169)	45	.3	.233	.2	5	432.35	1.69	.78	6.1	YES
*176 (98)	60	1.63	.642	.858	5	434.44	-.22	.39	16.9	NO
177 (170)	45	1.2	.583	.2	2	434.8	-1.12	.49	15.4	NO
*178 (96)	60	2.87	.583	.45	5	445.69	.55	.2	15.4	NO
179 (171)	45	3.8	.642	.2	2	447.5	-1.6	.17	16.9	NO
180 (95)	60	2.56	1.4	.2	2	448.34	-.42	.55	36.8	NO
181 (172)	45	1.8	.525	.2	2	448.3	.26	.29	13.8	NO
*182 (173)	45	.3	.233	.2	5	447.85	-.31	.78	6.1	YES
183 (94)	60	.93	1.458	.275	2	475.41	-1.08	1.57	38.4	NO
184 (93)	60	1.81	.642	.217	2	477.91	.17	.35	16.9	NO
185 (174)	45	.4	.583	.2	5	478.6	1.37	1.46	15.4	NO
*186 (164)	45	1.7	.233	.275	5	480.25	-1.13	.14	6.1	NO
187 (92)	60	1.75	.583	.2	5	480.37	-.37	.33	15.4	NO

* INDICATION APPEARS TO BE SUBSURFACE

WELD NUMBER: LOOP 32-6

INDICATION NUMBER	NOMINAL SCAN ANGLE	LENGTH	DEPTH	SUBSRF 'S'	SCAN DIR	CALCULATED LOCATION X	CALCULATED LOCATION Y	SECTION XI A/L	SECTION XI A/T	SECTION XI ACCEPT
188 (165)	45	6.1	.467	0	2	482.65	-2.41	.08	13	NO
*189 (91)	60	2.12	.292	.2	5	484.06	-.64	.14	7.7	NO
190 (166)	45	4.5	.525	.2	5	485.25	-.56	.12	13.8	NO
*191 (152)	45	1.4	.35	.2	5	488.2	1.65	.25	9.2	NO
*192 (90)	60	.87	.233	.333	5	489.44	-.48	.27	6.1	NO
*193 (163)	45	.3	.175	.2	5	490.35	-1.24	.58	4.6	YES
194 (89)	60	1.5	.583	.2	5	491	0	.39	15.4	NO
195 (88)	60	2.94	.583	.2	5	494.03	-.34	.2	15.4	NO
*196 (153)	45	1	.35	.275	5	493.8	-1.12	.35	9.2	NO
197 (86)	60	2.25	1.167	.217	2	495.12	-.62	.52	30.7	NO
198 (154)	45	.9	.467	.2	5	496.55	-.79	.52	12.3	NO
199 (155)	45	7.6	.933	0	2	500.9	-4.61	.12	25.9	NO
200 (157)	45	2.5	.467	.2	5	498.35	-.34	.19	12.3	NO
*201 (85)	60	1.12	.583	.683	2	497.81	-1.4	.52	15.4	NO
*202 (156)	45	1.2	.642	.333	2	498	-.34	.53	16.9	NO
203 (87)	60	.75	.817	.2	5	500.44	-.73	1.09	21.5	NO
204 (84)	60	1.75	.583	0	2	502.5	-2	.33	16.2	NO
*205 (158)	45	3.4	.292	.2	5	504.3	-.73	.09	7.7	NO
*206 (159)	45	.3	.233	.308	2	504.75	-3.11	.78	6.5	YES
207 (160)	45	.5	.525	0	2	507.45	-4.54	1.05	14.6	NO
208 (161)	45	3.4	.642	0	2	512.3	-4.3	.19	17.8	NO
209 (83)	60	2.31	.933	.217	5	518.4	-.68	.4	24.6	NO
210 (162)	45	.7	.175	0	2	518.75	-3.81	.25	4.9	NO

!@\!
WESTINGHOUSE NUCLEAR SERVICE DIVISION

ULTRASONIC TEST DATA

PLANT: INDIAN POINT

WELD NUMBER: 33-6

DATE: 3.5

PRINTING DATE:
October 7, 1982

INDICATION NUMBER	NOMINAL SCAN ANGLE	LENGTH	DEPTH	SUBSRF 'S'	SCAN DIR	CALCULATED LOCATION X	CALCULATED LOCATION Y	SECTION XI A/L	SECTION XI A/T	SECTION XI ACCEPT
* 1 (2)	45	1.5	.292	.392	2	1.25	.13	.19	7.7	NO
2 (3)	45	1.25	.583	.2	2	3.37	-.32	.47	15.4	NO
* 3 (234)	60	1.1	.292	.508	2	4.05	-.98	.27	7.7	NO
4 (4)	45	.75	.467	.2	2	5.82	-.61	.62	12.3	NO
5 (14)	45	.25	.525	.2	5	6.25	1.61	2.1	13.8	NO
* 6 (15)	45	.5	.233	.2	5	6.5	1.33	.47	6.1	NO
* 7 (16)	45	.25	.35	.2	5	7.01	.99	1.4	9.2	NO
8 (5)	45	2.37	.467	.2	2	9.57	-.52	.2	12.3	NO
9 (6)	45	1.62	.875	0	2	10.69	-3.29	.54	24.3	NO
* 10 (235)	60	.8	.525	.333	2	10.9	-1.12	.66	13.8	NO
* 11 (17)	45	1	.292	.2	5	11.13	.83	.29	7.7	NO
* 12 (7)	45	.81	.292	.2	2	12.1	-.39	.36	7.7	NO
* 13 (236)	60	.8	.408	.508	2	12.9	-1.54	.51	10.7	NO
14 (8)	45	3.69	.467	.2	2	14.59	-.14	.13	12.3	NO
15 (9)	45	1.12	.467	.2	2	17.69	-.01	.42	12.3	NO
16 (10)	45	1.25	.467	.2	2	18.31	-.39	.37	12.3	NO
17 (11)	45	1.25	.583	.2	2	19.06	-.14	.47	15.4	NO
18 (12)	45	2.12	.875	.2	2	20.69	-.41	.41	23	NO
* 19 (237)	60	.6	.292	.367	2	21.1	-1.94	.49	8.1	NO

* INDICATION APPEARS TO BE SUBSURFACE

WELD NUMBER: 33-6-A

INDICATION NUMBER	NOMINAL SCAN ANGLE	LENGTH	DEPTH	SUBSRF 'S'	SCAN DIR	CALCULATED LOCATION X	CALCULATED LOCATION Y	A/L	SECTION XI A/T	SECTION XI ACCEPT
20 (13)	45	1	.583	.2	2	22.31	-.04	.58	15.4	NO
* 21 (238)	60	.8	.35	.45	2	22.4	-1.03	.44	9.2	NO
22 (19)	45	4.31	.583	.2	2	25.84	-.51	.14	15.4	NO
23 (18)	45	1.25	.758	.2	2	25.13	-.66	.61	20	NO
* 24 (239)	60	.5	.35	.533	2	24.75	.36	.7	9.2	NO
* 25 (240)	60	1.2	.583	.333	2	27.5	-1.43	.49	15.4	NO
* 26 (241)	60	.2	.117	.825	2	27.4	.09	.58	3.1	YES
* 27 (242)	60	1.1	.583	.333	2	28.55	-1.18	.53	15.4	NO
28 (20)	45	.25	.817	.2	2	29	-.13	3.27	21.5	NO
* 29 (243)	60	1.6	.525	.392	2	30.3	-.78	.33	13.8	NO
30 (21)	45	.63	.583	.2	2	31.31	-.17	.93	15.4	NO
* 31 (244)	60	2.1	.7	.45	2	32.35	-.66	.33	18.4	NO
32 (22)	45	1	.467	.2	2	34	-.02	.47	12.3	NO
* 33 (245)	60	1.6	1.05	1.183	2	38.2	-2.09	.66	29.2	NO
34 (23)	45	.5	.467	.2	2	37.75	.05	.93	12.3	NO
35 (25)	45	.38	.525	.2	5	38.19	1.61	1.38	13.8	NO
* 36 (246)	60	1.7	.933	1.267	2	39.15	-1.16	.55	24.6	NO
37 (26)	45	.5	.467	.2	5	41.38	1.08	.93	12.3	NO
* 38 (27)	45	.25	.117	.25	5	41.87	4.22	.47	3.2	YES
* 39 (24)	45	.75	.292	.2	2	49.12	.2	.39	7.7	NO
40 (40)	45	1.75	.467	.2	5	49.87	1.45	.27	12.3	NO
41 (28)	45	.63	.408	.2	2	49.81	-.14	.65	10.7	NO
42 (39)	45	2.83	.642	.2	5	51.97	1.5	.23	16.9	NO
* 43 (247)	60	1	.467	.45	2	51.6	-1.19	.47	12.3	NO

* INDICATION APPEARS TO BE SUBSURFACE

WELD NUMBER: 33-6

INDICATION NUMBER	NOMINAL SCAN ANGLE	LENGTH	DEPTH	SUBSRF 'S'	SCAN DIR	CALCULATED LOCATION X	CALCULATED LOCATION Y	SECTION XI A/L	SECTION XI A/T	SECTION XI ACCEPT
44 (29)	45	.62	.408	.2	2	52.19	.58	.66	10.7	NO
* 45 (248)	60	1	.642	1.267	5	53.5	.49	.64	16.9	NO
46 (41)	45	.43	.35	0	5	54.09	1.89	.81	9.7	NO
47 (42)	45	.81	.7	-.2	5	54.9	-4.95	.86	19.4	NO
* 48 (249)	60	.9	.408	.625	2	55.55	-1.41	.45	10.7	NO
49 (30)	45	.82	.583	0	2	55.72	-5.51	.71	16.2	NO
* 50 (32)	45	.5	.233	.217	2	55.75	.53	.47	6.1	NO
51 (43)	45	3.55	.817	0	5	57.78	6.79	.23	22.7	NO
52 (44)	45	1.88	.817	.2	5	57.44	1.54	.43	21.5	NO
* 53 (31)	45	.75	.408	.275	2	56.87	-.19	.54	10.7	NO
* 54 (250)	60	1	.525	.508	2	57.8	-1.35	.52	13.8	NO
55 (33)	45	2.88	.817	0	2	59.44	6.87	.28	22.7	NO
* 56 (34)	45	.62	.233	.333	2	59	.22	.38	6.1	NO
57 (45)	45	1	.408	.2	5	59.69	1.48	.41	10.7	NO
58 (251)	60	1	.583	.25	2	60	-1.9	.58	16.2	NO
* 59 (252)	60	1.5	.408	1.417	2	60.75	-1.83	.27	11.3	NO
* 60 (35)	45	1.12	.35	.2	2	60.69	.05	.31	9.2	NO
* 61 (253)	60	.6	.35	.508	2	60.8	-1.54	.58	9.2	NO
62 (46)	45	.63	.408	.2	5	62.12	1.45	.65	10.7	NO
* 63 (254)	60	1.6	.7	.367	2	63.1	-2.13	.44	19.4	NO
64 (36)	45	1	.525	.217	2	63.56	-.19	.52	13.8	NO
* 65 (37)	45	1.12	.467	.333	2	67.94	-.03	.42	12.3	NO
* 66 (255)	60	.1	.117	.425	2	67.55	-2.09	1.17	3.2	YES
* 67 (38)	45	.5	.292	.683	2	68.5	-.67	.58	7.7	NO

* INDICATION APPEARS TO BE SUBSURFACE

WELD NUMBER: 33-6

INDICATION NUMBER	NOMINAL SCAN ANGLE	LENGTH	DEPTH	SUBSRF 'S'	SCAN DIR	CALCULATED LOCATION X	CALCULATED LOCATION Y	SECTION XI A/L	SECTION XI A/T	SECTION XI ACCEPT
* 68 (47)	45	.37	.117	.417	5	69.31	-1.32	.32	3.1	YES
69 (49)	45	2	.583	0	5	85	1.85	.29	16.2	NO
70 (48)	45	.75	.758	.2	2	86.12	.46	1.01	20	NO
* 71 (256)	60	1.2	.583	.45	2	86.9	-1.2	.49	15.4	NO
* 72 (51)	45	0	0	.45	8	87.41	-3.88	SPOT		YES
73 (50)	45	1.06	.525	0	7	89.46	-4.66	.5	14.6	NO
74 (52)	45	.75	.467	.217	2	104.37	.03	.62	12.3	NO
* 75 (53)	45	.25	.233	.2	5	104.51	1.33	.93	6.1	YES
* 76 (257)	60	1	.583	.975	5	117.5	.59	.58	15.4	NO
77 (55)	45	.75	.583	0	2	119.12	-4.2	.78	16.2	NO
78 (56)	45	.88	.467	0	2	119.44	-4.95	.53	13	NO
79 (54)	45	.88	.583	0	2	119.44	-2.64	.66	16.2	NO
* 80 (258)	60	1.3	.7	1.15	2	120.45	-1.72	.54	18.4	NO
81 (57)	45	.44	.642	-.2	2	120.91	3.48	1.46	17.8	NO
* 82 (259)	60	2.5	.7	1.033	2	167.75	-.64	.28	18.4	NO
* 83 (61)	45	.25	.35	.2	5	174.12	1.42	1.4	9.2	NO
84 (58)	45	4	.642	.2	2	176.38	.15	.16	16.9	NO
* 85 (60)	45	1	.292	.2	5	177.5	1.3	.29	7.7	NO
* 86 (260)	60	2	0	.392	2	179	.15	0	0	YES
87 (59)	45	2.32	.933	.2	2	179.47	-.23	.4	24.6	NO
* 88 (261)	60	.5	.408	.45	2	182.75	-.45	.82	10.7	NO
89 (262)	60	3	.642	.217	2	184.5	-.74	.21	16.9	NO
* 90 (263)	60	.75	.35	.333	2	188.12	-.69	.47	9.2	NO
* 91 (264)	60	1	.817	.567	5	189.5	1.03	.82	21.5	NO

* INDICATION APPEARS TO BE SUBSURFACE

WELD NUMBER: 33-6 [illegible]

INDICATION NUMBER	NOMINAL SCAN ANGLE	LENGTH	DEPTH	SUBSRF 'S'	SCAN DIR	CALCULATED LOCATION X	CALCULATED LOCATION Y	SECTION XI A/L	SECTION XI A/T	SECTION XI ACCEPT
* 92 (70)	45	.25	0	.3	5	192.5	1.01	0	0	YES
93 (62)	45	1	.467	.2	2	193	-.39	.47	12.3	NO
94 (63)	45	1.63	.642	.2	2	193.56	.15	.39	16.9	NO
95 (64)	45	.88	.467	.2	2	194.94	.64	.53	12.3	NO
96 (71)	45	1.12	.292	.042	5	196.19	-4.22	.26	8.1	NO
97 (65)	45	1.5	.7	0	2	196.75	-6.48	.47	19.4	NO
* 98 (68)	45	.5	.35	.217	2	198.88	1.02	.7	9.2	NO
99 (66)	45	1	.7	0	2	199.38	-3.7	.7	19.4	NO
100 (67)	45	1.88	.583	0	2	200.69	-4.39	.31	16.2	NO
101 (69)	45	1	.583	.2	2	200.5	.15	.58	15.4	NO
102 (72)	45	.94	1.05	-.2	5	200.72	-3.42	1.12	29.2	NO
103 (265)	60	0	0	-.2	2	200.25	.42	SPOT		YES
*104 (73)	45	1.88	.117	.183	2	207.69	.93	.06	3.1	NO
*105 (75)	45	.87	.35	.2	5	208.31	1.21	.4	9.2	NO
106 (74)	45	1.25	.467	.2	2	211.12	.24	.37	12.3	NO
107 (266)	60	0	0	.2	2	210.5	.04	SPOT		YES
108 (76)	45	2.25	.642	0	2	252.62	6.46	.29	17.8	NO
109 (79)	45	.62	.467	-.133	5	252.19	-5.63	.75	13	NO
*110 (267)	60	1	.583	1.733	2	252.5	-.8	.58	15.4	NO
*111 (78)	45	0	0	1.733	2	252.5	-3.63	SPOT		YES
112 (77)	45	1.75	.525	0	2	253.37	-6.17	.3	14.6	NO
113 (80)	45	.75	.233	0	2	271.12	-2.33	.31	6.5	NO
*114 (81)	45	.75	.35	.2	5	271.37	-.11	.47	9.2	NO
*115 (82)	45	.25	.233	.2	5	286.25	-.42	.93	6.1	YES

* INDICATION APPEARS TO BE SUBSURFACE

WELD NUMBER: 33-6

INDICATION NUMBER	NOMINAL SCAN ANGLE	LENGTH	DEPTH	SUBSRF 'S'	SCAN DIR	CALCULATED LOCATION X	Y	A/L	SECTION XI A/T	ACCEPT
*116 (83)	45	1	.292	.2	5	308.5	-.2	.29	7.7	NO
*117 (171)	60	.6	.175	.625	2	309.8	-.3	.29	4.6	NO
*118 (84)	45	0	0	.625	5	310.5	-.21	SPOT		YES
119 (172)	60	1.6	1.05	.333	2	312.3	-1.7	.66	27.6	NO
120 (85)	45	1.25	.583	.2	5	312.37	1.51	.47	15.4	NO
*121 (173)	60	1.5	.817	.425	2	314.05	-1.96	.54	22.7	NO
122 (86)	45	1.63	.758	0	5	316.07	2.16	.47	21.1	NO
123 (87)	45	1.25	.583	0	5	318.75	2.54	.47	16.2	NO
124 (88)	45	1.56	.7	0	5	320.41	2.29	.45	19.4	NO
*125 (174)	60	1.5	1.167	.683	2	321.75	-1.61	.78	30.7	NO
126 (89)	45	1.87	.7	0	5	322.82	3.07	.37	19.4	NO
127 (90)	45	1.25	.583	-.133	2	324.37	4.06	.47	16.2	NO
*128 (175)	60	.9	.7	.683	2	324.55	-1.46	.78	18.4	NO
129 (176)	60	1.6	1.283	.6	2	327.2	-3.22	.8	35.6	NO
*130 (177)	60	1	.467	.975	2	328.5	-1.56	.47	12.3	NO
131 (178)	60	.8	1.633	.367	2	328.4	-3.61	2.04	45.4	NO
132 (91)	45	1.25	.642	0	2	328.75	-3.01	.51	17.8	NO
*133 (179)	60	1.5	.583	.683	2	329.05	-1.26	.39	15.4	NO
*134 (180)	60	.2	.233	.3	2	328.4	-1.69	1.17	6.1	YES
*135 (181)	60	.7	.233	.567	2	328.95	4.65	.33	6.5	NO
*136 (182)	60	1.2	.817	.45	2	330.7	-1.55	.68	21.5	NO
*137 (183)	60	.1	.117	.45	2	333.05	-.8	1.17	3.1	YES
*138 (92)	45	.94	.408	.392	2	333.66	-.37	.43	10.7	NO
139 (184)	60	1.5	.992	.275	2	334.05	-1.45	.66	26.1	NO

* INDICATION APPEARS TO BE SUBSURFACE

WELD NUMBER: 33-6

INDICATION NUMBER	NOMINAL SCAN ANGLE	LENGTH	DEPTH	SUBSRF 'S'	SCAN DIR	CALCULATED LOCATION X	CALCULATED LOCATION Y	SECTION XI A/L	SECTION XI A/T	SECTION XI ACCEPT
140 (185)	60	2	.875	.275	2	335.8	-1.1	.44	23	NO
141 (186)	60	1	.7	.275	2	336.5	-.75	.7	18.4	NO
142 (95)	45	.75	.642	0	5	337.5	1.92	.86	17.8	NO
*143 (187)	60	.2	.117	1.008	2	338.2	-2.81	.58	3.2	YES
144 (96)	45	1.38	.642	0	5	339.69	2.2	.46	17.8	NO
145 (93)	45	0	0	0	2	340.63	.1	SPOT		YES
146 (188)	60	1.1	1.167	.392	2	341.35	-1.26	1.06	30.7	NO
*147 (189)	60	.7	.292	.8	2	341.15	-1.66	.42	7.7	NO
*148 (97)	45	.62	.35	.2	5	341.19	1.52	.56	9.2	NO
149 (98)	45	1.81	.408	0	5	345.09	1.86	.23	11.3	NO
150 (94)	45	.25	.467	.217	2	346.5	-.35	1.87	12.3	NO
151 (190)	60	1	1.05	.075	2	347.3	-2.1	1.05	29.2	NO
*152 (191)	60	1	.583	.45	2	348.5	-1.35	.58	15.4	NO
153 (99)	45	.38	.233	.017	2	349.31	-3.35	.62	6.5	NO
*154 (192)	60	.2	.117	.333	5	351.5	.8	.58	3.1	YES
*155 (103)	45	.68	.35	.2	5	352.91	.33	.51	9.2	NO
*156 (100)	45	.87	.408	.217	2	354.19	-.56	.47	10.7	NO
*157 (193)	60	.4	.117	.625	2	354.1	-1.2	.29	3.1	YES
158 (104)	45	1.07	.408	.2	5	355.03	.86	.38	10.7	NO
159 (101)	45	1.06	.467	.217	2	355.91	.53	.44	12.3	NO
160 (194)	60	1	.933	.333	2	356	-1.2	.93	24.6	NO
*161 (105)	45	.38	.233	.2	5	357.06	.67	.62	6.1	YES
162 (102)	45	3.06	.642	.2	2	358.85	.36	.21	16.9	NO
*163 (195)	60	.9	.7	.367	2	359.05	-2.21	.78	19.4	NO

* INDICATION APPEARS TO BE SUBSURFACE

WELD NUMBER: 33-6-6

INDICATION NUMBER	NOMINAL SCAN ANGLE	LENGTH	DEPTH	SUBSRF 'S'	SCAN DIR	CALCULATED LOCATION X	CALCULATED LOCATION Y	A/L	SECTION XI A/T	SECTION XI ACCEPT
*164 (196)	60	.8	.7	.6	2	359.4	-3.01	.88	19.4	NO
165 (106)	45	1.56	.408	.2	5	359.84	.98	.26	10.7	NO
*166 (197)	60	.8	.7	.392	2	360.7	-1.35	.87	18.4	NO
*167 (107)	45	.56	.175	.625	2	361.78	.07	.31	4.6	NO
168 (112)	45	1.44	.408	0	5	362.47	2.58	.28	11.3	NO
169 (108)	45	1	.525	.2	2	363.5	.21	.52	13.8	NO
170 (109)	45	1.25	.408	.2	2	367.5	.67	.33	10.7	NO
171 (110)	45	1.19	.525	.217	2	369.59	.22	.44	13.8	NO
*172 (198)	60	.4	.35	.508	2	370.6	-1.5	.88	9.2	NO
173 (111)	45	1.07	.467	.2	2	371.03	-.01	.44	12.3	NO
174 (114)	45	1.18	.467	.217	2	373.22	-.1	.4	12.3	NO
*175 (122)	45	.5	.292	.242	5	373.13	.78	.58	7.7	NO
176 (124)	45	1.63	.817	-.2	5	376.57	-4.07	.5	22.7	NO
177 (115)	45	1.12	.408	.2	2	376.69	.02	.36	10.7	NO
178 (123)	45	1.75	.525	.2	5	377.25	1.67	.3	13.8	NO
*179 (113)	45	.38	.233	.2	5	376.69	1.11	.61	6.1	YES
*180 (199)	60	2	1.108	1.092	2	378	-1.02	.55	29.2	NO
*181 (200)	60	.5	.292	.625	2	377.25	-1.5	.58	7.7	NO
182 (116)	45	1.44	.642	0	2	377.72	6.34	.45	17.8	NO
*183 (201)	60	.2	.233	.45	2	377.4	4.55	1.17	6.5	YES
184 (117)	45	1.94	.583	.2	2	378.47	-.36	.3	15.4	NO
185 (125)	45	1.62	.35	-.017	5	379.69	-4.5	.22	9.7	NO
186 (119)	45	1.68	.525	.2	2	379.97	-.01	.31	13.8	NO
187 (118)	45	1.88	1.225	-.2	2	381.44	3.34	.65	34	NO

* INDICATION APPEARS TO BE SUBSURFACE

WELD NUMBER: 33-6

INDICATION NUMBER	NOMINAL SCAN ANGLE	LENGTH	DEPTH	SUBSRF 'S'	SCAN DIR	CALCULATED LOCATION X	CALCULATED LOCATION Y	SECTION XI A/L	SECTION XI A/T	SECTION XI ACCEPT
188 (120)	45	2.06	.35	-.017	2	381.6	4.63	.17	9.7	NO
189 (202)	60	.9	.875	.275	2	381.35	0	.97	23	NO
*190 (121)	45	.74	.642	.683	2	382.69	-.57	.87	16.9	NO
191 (129)	45	2.25	.583	0	5	388	1.76	.26	16.2	NO
192 (128)	45	.87	.408	-.133	2	389.94	3.15	.47	11.3	NO
193 (126)	45	1.88	.933	.2	2	390.44	-.57	.5	24.6	NO
*194 (130)	45	.62	.35	.2	5	391.31	.83	.56	9.2	NO
195 (127)	45	.93	.758	.2	2	392.59	.27	.82	20	NO
196 (131)	45	.38	.7	.2	2	399.06	-.26	1.87	18.4	NO
*197 (132)	45	.81	.292	.2	5	399.72	.86	.36	7.7	NO
198 (133)	45	.75	.408	.2	2	426.37	-.23	.54	10.7	NO
199 (203)	60	.6	.583	.25	2	428.1	-1.9	.97	16.2	NO
200 (134)	45	5.94	.7	.2	2	431.16	-.45	.12	18.4	NO
201 (204)	60	.9	.642	.217	2	429.05	-.95	.71	16.9	NO
202 (135)	45	1.62	.408	.2	5	429.69	1.2	.25	10.7	NO
*203 (136)	45	1.06	.35	.2	5	431.41	1.17	.33	9.2	NO
*204 (205)	60	.7	.525	.333	2	431.65	-1.3	.75	13.8	NO
*205 (206)	60	1	.467	.45	2	432.6	-1.15	.47	12.3	NO
206 (137)	45	.75	.758	.2	2	434.37	.37	1.01	20	NO
207 (207)	60	1.5	.933	.2	2	435.25	-1.57	.62	24.6	NO
208 (138)	45	1.37	.583	.2	2	435.69	-.67	.42	15.4	NO
*209 (142)	45	.81	.233	.2	5	435.53	1.02	.29	6.1	NO
*210 (208)	60	.6	.233	.275	5	437.8	.25	.39	6.1	NO
*211 (143)	45	7.55	.233	.2	5	443.1	1.21	.03	6.1	NO

* INDICATION APPEARS TO BE SUBSURFACE

WELD NUMBER: 33-6

INDICATION NUMBER	NOMINAL SCAN ANGLE	LENGTH	DEPTH	SUBSRF 'S'	SCAN DIR	CALCULATED LOCATION X	CALCULATED LOCATION Y	SECTION XI A/L	SECTION XI A/T	SECTION XI ACCEPT
*212 (139)	45	.94	.35	.2	2	440.22	.45	.37	9.2	NO
*213 (140)	45	1.19	.233	.217	2	441.66	.15	.2	6.1	NO
*214 (209)	60	.5	.233	.45	2	441.65	-.65	.47	6.1	NO
*215 (141)	45	.62	.292	.217	2	443.69	.25	.47	7.7	NO
216 (210)	60	1.3	.933	.217	2	444.65	-1.1	.72	24.6	NO
*217 (146)	45	.62	.35	.2	5	445.44	1.32	.56	9.2	NO
218 (211)	60	1.2	1.108	.075	2	445.9	-1.9	.92	30.8	NO
219 (212)	60	1.1	.7	.333	2	447.55	-1.25	.64	18.4	NO
220 (147)	45	2	.35	-.2	5	448.75	-5.88	.17	9.7	NO
221 (144)	45	1.63	.408	0	2	449.81	-6.51	.25	11.3	NO
222 (148)	45	1.62	.292	0	5	449.94	-6.45	.18	8.1	NO
*223 (213)	60	1	.35	.45	5	450.5	-2.75	.35	9.7	NO
224 (214)	60	1.7	1.167	.2	2	451.25	-1.42	.69	30.7	NO
*225 (145)	45	.75	.583	.333	2	450.87	-.54	.78	15.4	NO
226 (149)	45	1.25	.292	.017	5	451.12	1.81	.23	8.1	NO
*227 (150)	45	.32	.233	.45	2	467.97	-.33	.73	6.1	YES
228 (215)	60	1	1.05	.2	2	468.5	-1.62	1.05	27.6	NO
229 (216)	60	1.4	1.342	.0	2	478.3	-2.08	.96	37.3	NO
230 (217)	60	1.9	.875	.2	2	480.85	-1.52	.46	23	NO
231 (151)	45	1	.583	.2	2	480.5	.06	.58	15.4	NO
*232 (152)	45	1.37	.35	.217	2	483.31	.03	.26	9.2	NO
*233 (218)	60	.7	.35	.275	2	483.15	-1.2	.5	9.2	NO
*234 (219)	60	.1	.117	.2	5	484.55	1.02	1.17	3.1	YES
235 (153)	45	1	.35	0	5	486.25	1.82	.35	9.7	NO

* INDICATION APPEARS TO BE SUBSURFACE

WELD NUMBER: 33-6

INDICATION NUMBER	NOMINAL SCAN ANGLE	LENGTH	DEPTH	SUBSRF 'S'	SCAN DIR	CALCULATED LOCATION X	CALCULATED LOCATION Y	SECTION XI A/L	SECTION XI A/T	SECTION XI ACCEPT
236 (220)	60	1.2	1.05	.2	2	489.9	-1.57	.87	27.6	NO
*237 (154)	45	.63	.117	.217	5	490.31	1.22	.19	3.1	YES
*238 (155)	45	1	.292	.275	2	493	-.31	.29	7.7	NO
*239 (159)	45	.63	.233	.2	5	494.06	1.27	.37	6.1	NO
*240 (156)	45	.75	.292	.275	2	494.62	-.5	.39	7.7	NO
*241 (221)	60	1.2	.292	.333	2	495.9	-1.2	.24	7.7	NO
*242 (224)	60	.9	.35	.45	2	497.05	-.93	.39	9.2	NO
243 (222)	60	1.7	.933	.2	2	497.75	-1.07	.55	24.6	NO
244 (225)	60	2.5	.583	.275	2	500.15	-1.32	.23	15.4	NO
*245 (157)	45	.75	.117	.217	2	499.5	.02	.16	3.1	NO
*246 (158)	45	.57	.175	.2	5	500.59	1.27	.31	4.6	NO
*247 (226)	60	.4	.117	.45	2	500.7	-.81	.29	3.1	YES
*248 (227)	60	.7	.408	.217	2	505.75	-.34	.58	10.7	NO
249 (165)	45	1.44	.467	0	5	507.53	3.2	.32	13	NO
250 (160)	45	.87	.525	-.2	2	507.56	4.66	.6	14.6	NO
251 (166)	45	1.44	.758	0	5	508.22	5.03	.53	21.1	NO
252 (223)	60	.4	.583	.275	2	507.8	-1.55	1.46	15.4	NO
*253 (228)	60	.8	.467	.392	2	509	-1.03	.58	12.3	NO
*254 (161)	45	1	.292	.275	2	509.5	.25	.29	7.7	NO
255 (162)	45	.88	.525	0	2	510.44	-2.79	.6	14.6	NO
*256 (229)	60	.7	.467	.45	2	510.45	-1.19	.67	12.3	NO
257 (163)	45	.94	.35	-.133	2	510.78	5.5	.37	9.7	NO
258 (167)	45	1.19	.467	.017	5	511.34	-5.95	.39	13	NO
259 (168)	45	.5	.233	0	7	510.86	5.25	.47	6.5	NO

* INDICATION APPEARS TO BE SUBSURFACE

WELD NUMBER: 33-6

INDICATION NUMBER	NOMINAL SCAN ANGLE	LENGTH	DEPTH	SUBSRF 'S'	SCAN DIR	CALCULATED LOCATION X	CALCULATED LOCATION Y	SECTION XI A/L	SECTION XI A/T	SECTION XI ACCEPT
*260 (164)	45	.5	.233	.333	2	514.31	.38	.47	6.1	NO
*261 (230)	60	.5	.233	1.5	2	515.25	-.69	.47	6.1	NO
262 (1)	45	.87	.467	.217	2	516.63	-.1	.54	12.3	NO
*263 (231)	60	1.3	.233	.333	5	518.25	1.25	.18	6.1	NO
264 (169)	45	1.75	.467	.217	2	519.88	-.65	.27	12.3	NO
*265 (170)	45	1	.175	.242	5	519.5	.97	.17	4.6	NO
*266 (232)	60	.7	.525	.45	2	519.65	-1.64	.75	13.8	NO
*267 (233)	60	1.2	.583	.333	2	521	-1.03	.49	15.4	NO

WESTINGHOUSE NUCLEAR SERVICE DIVISION

ULTRASONIC TEST DATA

PLANT: INDIAN POINT

WELD NUMBER: 34-6

DATE: 4-24-82

PRINTING DATE:
October 7, 1982

INDICATION NUMBER	NOMINAL SCAN ANGLE	LENGTH	DEPTH	SUBSRF 'S'	SCAN DIR	CALCULATED LOCATION X	CALCULATED LOCATION Y	SECTION XI A/L	SECTION XI A/T	SECTION XI ACCEPT
1 (122)	45	.5	.525	-.2	2	.87	1.79	1.05	14.6	NO
* 2 (138)	45	.63	.35	.2	5	.94	.83	.56	9.2	NO
* 3 (29)	60	1.31	.642	1.358	2	3.59	-1.89	.49	17.8	NO
4 (137)	45	1.44	.525	0	5	4.28	2.48	.36	14.6	NO
5 (123)	45	.63	.233	0	2	4.44	-6.46	.37	6.5	NO
6 (121)	45	.87	.642	-.2	2	5.19	4.73	.74	17.8	NO
7 (127)	45	1.25	.35	0	2	5.88	-6.89	.28	9.7	NO
8 (124)	45	0	0	0	2	5.62	-4.6	SPOT		YES
9 (135)	45	.63	.292	0	5	6.19	-7.08	.46	8.1	NO
10 (136)	45	.75	.292	0	5	6.38	-6.08	.39	8.1	NO
11 (125)	45	.75	.35	.017	2	6.5	-4.16	.47	9.7	NO
12 (134)	45	1.5	.583	0	5	7.12	3.14	.39	16.2	NO
* 13 (126)	45	1.05	.467	.333	2	8.84	.53	.44	12.3	NO
* 14 (133)	45	0	0	.333	5	9.25	1.82	SPOT		YES
15 (128)	45	.75	.525	0	2	11.49	-3.23	.7	14.6	NO
16 (31)	60	1.68	1.05	.25	2	12.22	-1.8	.62	29.2	NO
* 17 (30)	60	.75	.7	.567	5	12.01	.67	.93	18.4	NO
* 18 (132)	45	.12	.175	.2	5	14.31	1.55	1.46	4.6	YES
19 (129)	45	1	.175	0	2	16.75	-3.68	.17	4.9	NO

* INDICATION APPEARS TO BE SUBSURFACE

WELD NUMBER: 34-6

INDICATION NUMBER	NOMINAL SCAN ANGLE	LENGTH	DEPTH	SUBSRF 'S'	SCAN DIR	CALCULATED LOCATION X	Y	A/L	SECTION XI A/T	ACCEPT
20 (131)	45	0	0	0	5	17	1.76	SPOT		YES
21 (130)	45	1.25	.467	.2	5	17.88	1.26	.37	12.3	NO
22 (141)	45	.75	-.408	.2	5	33.25	.24	.54	10.7	NO
23 (139)	45	1.13	.758	.2	2	34.68	-.1	.67	20	NO
* 24 (33)	60	1.75	.292	.508	2	36.06	-1.65	.17	7.7	NO
25 (140)	45	1.87	.467	.217	2	36.18	-.13	.25	12.3	NO
* 26 (32)	60	.81	.467	.333	2	38.28	-1.21	.58	12.3	NO
27 (142)	45	1	.525	.2	2	39.12	-.42	.52	13.8	NO
* 28 (143)	45	.25	.233	.275	2	38.87	-.72	.93	6.1	YES
* 29 (34)	60	.69	.292	.392	2	39.65	-1.07	.42	7.7	NO
* 30 (148)	45	0	.175	.392	5	39.37	.11	SPOT		YES
31 (144)	45	1.37	.642	.2	2	41.43	-.6	.47	16.9	NO
* 32 (149)	45	.75	.35	.2	5	41.12	.27	.47	9.2	NO
33 (150)	45	.5	.467	.2	5	42.12	.64	.93	12.3	NO
* 34 (145)	45	1.25	.233	.2	2	43	-.14	.19	6.1	NO
35 (35)	60	.69	.525	.017	2	43.03	-1.9	.76	14.6	NO
36 (146)	45	1.37	.525	.2	2	44.93	-.48	.38	13.8	NO
* 37 (147)	45	.37	.35	.2	2	46.43	-.33	.95	9.2	NO
38 (151)	45	2.12	.408	.2	2	48.81	-.36	.19	10.7	NO
39 (161)	45	0	0	.2	5	48.37	1.42	SPOT		YES
* 40 (36)	60	1.57	.35	.192	2	49.34	-2.15	.22	9.7	NO
41 (37)	60	1	.467	.217	2	51.5	-1.54	.47	12.3	NO
* 42 (152)	45	.57	.35	.2	2	52.97	-.45	.61	9.2	NO
43 (38)	60	.81	.467	.217	2	53.1	-1.51	.58	12.3	NO

* INDICATION APPEARS TO BE SUBSURFACE

WELD NUMBER: 34-6

INDICATION NUMBER	NOMINAL SCAN ANGLE	LENGTH	DEPTH	SUBSRF 'S'	SCAN DIR	CALCULATED LOCATION X	CALCULATED LOCATION Y	SECTION XI A/L	SECTION XI A/T	SECTION XI ACCEPT
* 44 (160)	45	.5	.35	.2	5	53.37	1.21	.7	9.2	NO
45 (159)	45	.87	.292	.017	5	55.68	2.07	.34	8.1	NO
46 (158)	45	.37	.292	0	5	58.43	2.43	.79	8.1	NO
* 47 (39)	60	.88	.408	.683	2	60.25	-1.08	.46	10.7	NO
48 (153)	45	3	.583	.2	2	61.87	.3	.19	15.4	NO
* 49 (157)	45	1	.175	.2	5	60.87	1.3	.17	4.6	NO
* 50 (40)	60	1.56	.642	.45	2	63.28	-1.1	.41	16.9	NO
* 51 (155)	45	.88	.233	.508	2	68.56	.16	.27	6.1	NO
* 52 (154)	45	1.12	.467	.333	2	69.56	.41	.42	12.3	NO
* 53 (156)	45	1.25	.35	.217	2	72.74	.27	.28	9.2	NO
54 (162)	45	.87	.408	0	2	74.43	-2.42	.47	11.3	NO
* 55 (42)	60	.69	.817	.8	2	77.15	-.89	1.18	21.5	NO
* 56 (41)	60	1.56	.758	1.033	2	79.22	-.83	.49	20	NO
* 57 (164)	45	.5	.175	.2	2	79.37	-1.74	.35	4.6	YES
* 58 (165)	45	.25	.233	.625	5	79.87	.08	.93	6.1	YES
* 59 (44)	60	2.44	.525	.45	5	81.47	1.22	.22	13.8	NO
60 (163)	45	1.12	.467	0	2	80.81	-2.14	.42	13	NO
61 (43)	60	.81	.408	0	2	81.53	-2.24	.5	11.3	NO
* 62 (166)	45	1.25	.175	.567	2	102.24	.19	.14	4.6	NO
63 (45)	60	2.06	.875	.333	2	103.03	-.78	.42	23	NO
64 (46)	60	.75	.583	.192	2	117.87	-1.76	.78	16.2	NO
65 (167)	45	.38	.467	.217	2	118.31	-.47	1.23	12.3	NO
* 66 (168)	45	.38	.175	.2	5	118.31	1.24	.46	4.6	YES
67 (47)	60	.75	.7	.333	2	119.37	-1.41	.93	18.4	NO

* INDICATION APPEARS TO BE SUBSURFACE

WELD NUMBER: 34-6

INDICATION NUMBER	NOMINAL SCAN ANGLE	LENGTH	DEPTH	SUBSRF 'S'	SCAN DIR	CALCULATED LOCATION X	CALCULATED LOCATION Y	SECTION XI A/L	SECTION XI A/T	SECTION XI ACCEPT
68 (169)	45	.38	.583	0	2	203.81	-1.89	1.54	16.2	NO
* 69 (1)	60	1.19	.525	.483	2	204.59	-2.84	.44	14.6	NO
* 70 (3)	60	.69	.467	.6	2	205.91	-2.87	.68	13	NO
* 71 (2)	60	1	.175	.392	2	206.13	-.87	.17	4.6	NO
* 72 (170)	45	.62	.292	.45	2	206.06	.07	.47	7.7	NO
* 73 (178)	45	1.12	.35	.2	5	206.31	1.33	.31	9.2	NO
* 74 (171)	45	1.5	.467	.45	2	208	.29	.31	12.3	NO
* 75 (4)	60	.63	.583	.483	2	208.31	-2.17	.93	16.2	NO
76 (177)	45	1.75	.292	0	5	209.12	2.05	.17	8.1	NO
* 77 (5)	60	1.25	.642	1.008	2	212.5	-2.44	.51	17.8	NO
78 (174)	45	.87	.525	-.2	2	213.18	3.16	.6	14.6	NO
79 (173)	45	1.25	.7	-.2	2	214.24	2.95	.56	19.4	NO
80 (179)	45	.75	.467	-.2	5	214.24	-1.82	.62	13	NO
81 (180)	45	.88	.583	.2	5	214.31	-.42	.66	15.4	NO
82 (172)	45	.62	.35	.017	2	214.81	-4.66	.56	9.7	NO
83 (176)	45	1.25	.525	0	5	215.24	2.54	.42	14.6	NO
* 84 (6)	60	.63	.583	.833	2	215.31	-1.78	.93	16.2	NO
85 (181)	45	.81	.175	.042	2	216.72	2.21	.22	4.9	NO
86 (182)	45	.44	.467	.017	5	216.53	-7.16	1.06	13	NO
* 87 (7)	60	2.12	.758	.508	2	217.44	-1.46	.36	20	NO
88 (175)	45	.75	.408	0	5	217.24	2.23	.54	11.3	NO
* 89 (8)	60	1	.583	.658	2	217.38	-2.03	.58	16.2	NO
* 90 (187)	45	.75	.233	.2	5	228.99	.58	.31	6.1	NO
* 91 (183)	45	1.38	.408	.217	2	229.81	-.32	.3	10.7	NO

* INDICATION APPEARS TO BE SUBSURFACE

WELD NUMBER: 34-6

INDICATION NUMBER	NOMINAL SCAN ANGLE	LENGTH	DEPTH	SUBSRF 'S'	SCAN DIR	CALCULATED LOCATION X	CALCULATED LOCATION Y	SECTION XI A/L	SECTION XI A/T	SECTION XI ACCEPT
92 (9)	60	1.38	.525	.133	2	229.94	-2.58	.38	14.6	NO
93 (10)	60	1.25	.875	.017	2	234.12	-2.55	.7	24.3	NO
94 (184)	45	3.88	.467	.2	2	236.06	-.08	.12	12.3	NO
* 95 (188)	45	2.12	.292	.2	5	238.06	.92	.14	7.7	NO
96 (185)	45	1.25	.7	.2	2	238.49	-.2	.56	18.4	NO
97 (186)	45	1.5	.467	.2	2	239.37	-.26	.31	12.3	NO
* 98 (191)	45	.13	.117	.242	5	239.43	.82	.9	3.1	YES
99 (11)	60	1.12	.583	.217	2	239.94	-1.3	.52	15.4	NO
*100 (190)	45	.37	.35	.2	5	241.93	.95	.95	9.2	NO
101 (189)	45	1.38	.467	.2	2	243.56	.49	.34	12.3	NO
102 (194)	45	0	0	.2	5	251.87	2.01	SPOT		YES
103 (192)	45	.62	.467	-.2	2	253.31	1.88	.75	13	NO
*104 (193)	45	.38	.35	.333	2	262.31	-.22	.92	9.2	NO
105 (48)	45	1.11	.408	0	5	277.31	2.74	.37	11.3	NO
106 (49)	45	.87	.467	0	5	279.19	1.89	.54	13	NO
107 (50)	45	0	0	0	2	285.63	-1.95	SPOT		YES
108 (51)	45	.62	.467	0	2	314.69	-3.33	.75	13	NO
*109 (12)	60	1.37	.642	.392	2	319.57	-1.59	.47	16.9	NO
*110 (52)	45	.25	.233	.2	5	319.5	1.52	.93	6.1	YES
*111 (60)	45	0	0	.2	8	341.6	7.25	SPOT		YES
*112 (55)	45	0	0	.2	5	342.06	3.66	SPOT		YES
113 (56)	45	1.37	.35	.075	5	342.82	-7.47	.26	9.7	NO
114 (57)	45	0	0	.075	5	342.25	5.32	SPOT		YES
*115 (13)	60	.38	.292	1.325	5	342.5	-.22	.77	7.7	NO

* INDICATION APPEARS TO BE SUBSURFACE

WELD NUMBER: 34-6

INDICATION NUMBER		NOMINAL SCAN ANGLE	LENGTH	DEPTH	SUBSRF 'S'	SCAN DIR	CALCULATED LOCATION X	Y	SECTION XI A/L	A/T	ACCEPT
116	(58)	45	.63	.35	0	5	342.82	3.58	.56	9.7	NO
117	(59)	45	0	0	0	5	342.88	-6.41	SPOT		YES
118	(63)	45	.5	.292	-.2	5	343.87	-2.22	.58	8.1	NO
*119	(14)	60	.63	.175	1.15	5	344.32	.44	.28	4.6	NO
120	(61)	45	.88	.292	0	5	344.69	3.49	.33	8.1	NO
121	(64)	45	0	0	0	5	344.5	-3.83	SPOT		YES
122	(62)	45	.25	.175	.042	5	344.62	4.78	.7	4.9	NO
123	(53)	45	.62	.233	0	2	350.19	-1.83	.38	6.5	NO
124	(16)	60	.44	.7	.2	5	351.53	.18	1.59	18.4	NO
125	(54)	45	2.63	.467	0	2	354.07	-2.39	.18	13	NO
126	(15)	60	.62	.408	.133	2	355.25	-2.54	.66	11.3	NO
*127	(65)	45	.37	.35	.2	5	384.69	.2	.95	9.2	NO
*128	(66)	45	.25	.117	.3	5	395.99	.88	.47	3.1	YES
129	(72)	45	1	.408	0	5	398.25	-9.64	.41	11.3	NO
130	(67)	45	.25	.117	0	2	401.24	-2.34	.47	3.2	YES
*131	(17)	60	.63	.35	.217	5	402.62	-.12	.56	9.2	NO
*132	(68)	45	.75	.35	.658	2	406.62	-2.01	.47	9.7	NO
133	(73)	45	.75	.583	.2	5	406.62	1.64	.78	15.4	NO
134	(74)	45	1.13	.583	0	5	406.94	-8.06	.52	16.2	NO
135	(18)	60	.94	.933	.425	2	407.53	-3.59	.99	25.9	NO
136	(69)	45	1.5	.583	0	2	408.12	-6.57	.39	16.2	NO
137	(75)	45	.63	.408	0	5	408.19	2.05	.65	11.3	NO
138	(70)	45	1.5	.583	0	2	408.62	-7.2	.39	16.2	NO
139	(71)	45	1.63	.525	0	2	409.19	-8.92	.32	14.6	NO

* INDICATION APPEARS TO BE SUBSURFACE

WELD NUMBER: 34-6

INDICATION NUMBER	NOMINAL SCAN ANGLE	LENGTH	DEPTH	SUBSRF 'S'	SCAN DIR	CALCULATED LOCATION X	CALCULATED LOCATION Y	SECTION XI A/L	SECTION XI A/T	SECTION XI ACCEPT
*140 (76)	45	.62	.35	.217	2	446.56	-1.16	.56	9.2	NO
*141 (82)	45	.5	.233	.242	5	446.87	.69	.47	6.1	NO
*142 (19)	60	.87	.7	.6	2	448.56	-2.32	.8	19.4	NO
*143 (83)	45	0	0	.6	5	448.5	2.01	SPOT		YES
*144 (78)	45	2.75	.175	.2	2	456.5	-.14	.06	4.6	NO
145 (77)	45	2.38	.583	.2	2	462.06	-1.01	.25	15.4	NO
146 (79)	45	2.38	.408	.2	2	462.06	-.23	.17	10.7	NO
*147 (80)	45	1.13	.233	.2	2	463.94	.11	.21	6.1	NO
148 (81)	45	1.87	.758	.2	2	465.44	-.29	.41	20	NO
149 (84)	45	0	0	.2	2	467.5	-.33	SPOT		YES
150 (90)	45	.38	.35	0	5	467.81	1.92	.92	9.7	NO
*151 (20)	60	.5	.35	.508	2	469	-1.7	.7	9.2	NO
152 (91)	45	.75	.233	0	5	469.25	2.74	.31	6.5	NO
153 (85)	45	0	0	0	2	470.37	.46	SPOT		YES
154 (21)	60	.75	.35	.133	2	471.12	-1.77	.47	9.7	NO
155 (92)	45	.63	.467	.2	5	471.69	.58	.74	12.3	NO
*156 (23)	60	.25	.292	.2	5	471.87	1.27	1.17	7.7	NO
*157 (22)	60	.88	.467	.483	2	472.19	-2.42	.53	13	NO
*158 (86)	45	.5	.233	.275	2	472.62	-.72	.47	6.1	NO
159 (87)	45	1.5	.408	.2	2	475.37	-.48	.27	10.7	NO
*160 (93)	45	.5	.292	.2	5	475.12	1.24	.58	7.7	NO
161 (88)	45	1.38	.467	.217	2	477.31	-.97	.34	12.3	NO
*162 (94)	45	.12	.175	.242	5	477.31	1.03	1.46	4.6	YES
*163 (89)	45	1	.35	.217	2	478.12	-.47	.35	9.2	NO

* INDICATION APPEARS TO BE SUBSURFACE

WELD NUMBER: 34-6

INDICATION NUMBER	NOMINAL SCAN ANGLE	LENGTH	DEPTH	SUBSRF 'S'	SCAN DIR	CALCULATED LOCATION X	CALCULATED LOCATION Y	SECTION XI A/L	SECTION XI A/T	SECTION XI ACCEPT
188 (26)	60	.6	.525	.133	2	505.14	-2.42	.87	14.6	NO
189 (27)	60	.5	.408	.192	2	505.81	-2.36	.82	11.3	NO
190 (28)	60	.5	.467	.133	2	510.25	-2.18	.93	13	NO
191 (117)	45	1.25	.7	.2	2	511	-.82	.56	18.4	NO
*192 (120)	45	.25	.117	.242	5	511.62	.38	.47	3.1	YES
193 (118)	45	.62	.583	.2	2	512.31	-.76	.94	15.4	NO
194 (119)	45	.25	.408	.2	2	513.13	-.17	1.63	10.7	NO

Attachment 2

STEAM GENERATOR CLASS 2

INT-2-1100A
REV.2: 6-80

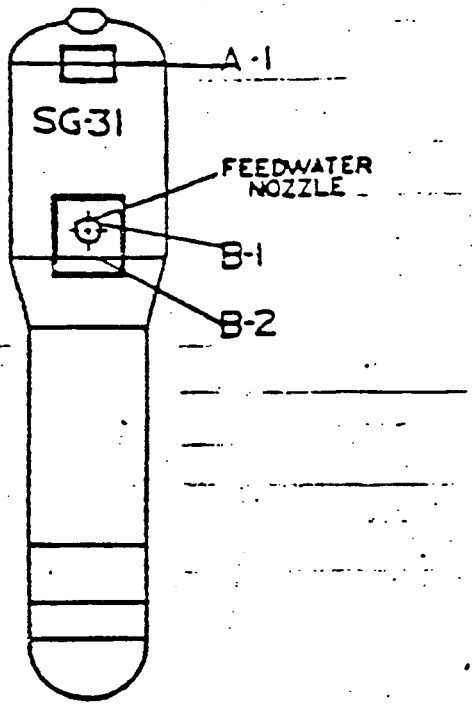

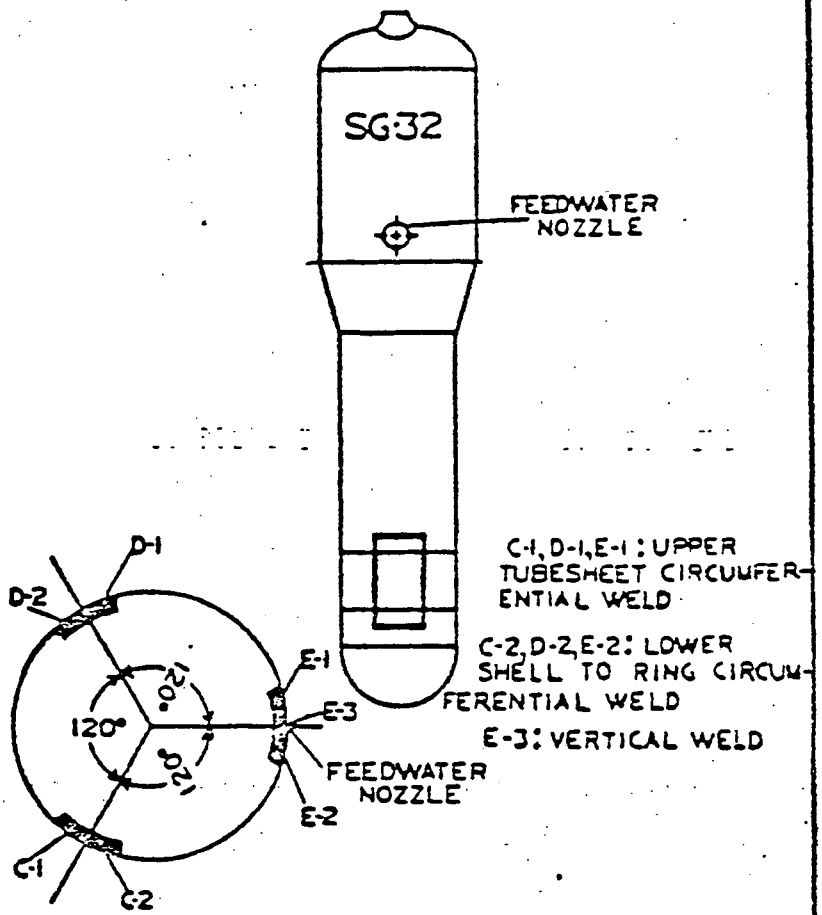

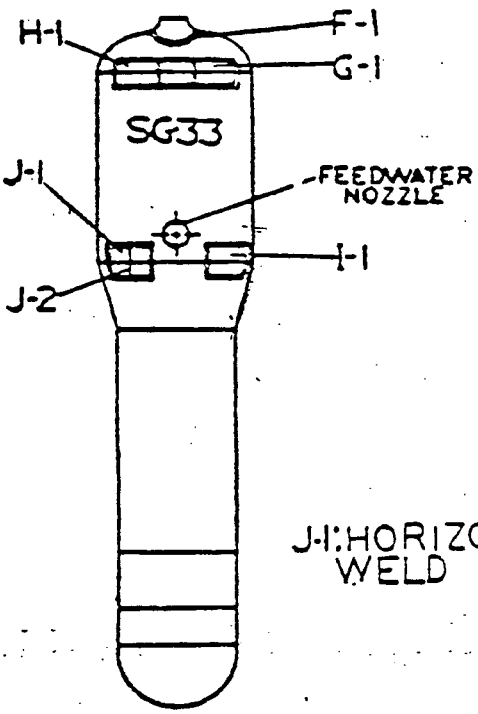
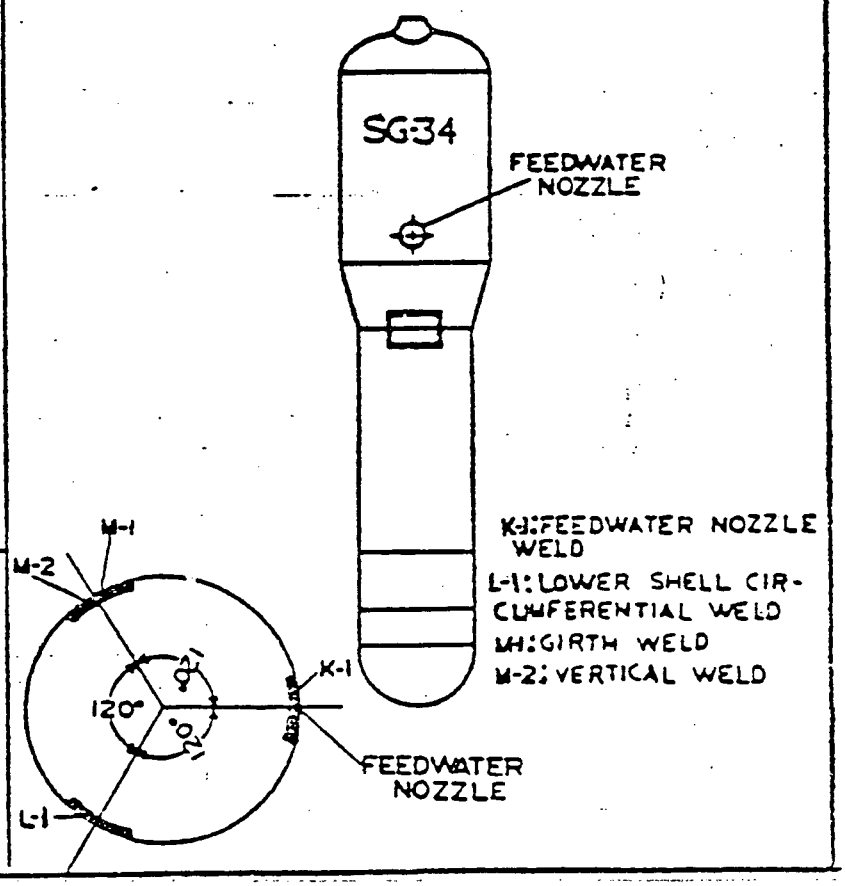
J-1: HORIZONTAL WELD