ATTACHMENT 1

ATWS MITIGATING SYSTEM ACTUATION CIRCUITRY (AMSAC)

RESPONSES TO REQUESTS FOR ADDITIONAL INFORMATION

POWER AUTHORITY OF THE STATE OF NEW YORK
INDIAN POINT 3 NUCLEAR POWER PLANT
DOCKET NO. 50-286
JANUARY 11, 1982

1. Describe the independence of the AMSAC initiating channels (from sensor through actuation device) from the Reactor Protection System.

   Response:

   The following design features establish the independence of the AMSAC initiating channels from the Reactor Protection System (RPS).

   a. The proposed AMSAC utilizes new sensors (transmitters) to monitor flow in the four main feedwater lines to the steam generators. Two AMSAC transmitters per line will be used.

   b. These transmitters will be arranged in two channels using redundant logic circuitry.

   c. The above transmitters as well as the logic circuitry will not be associated with nor will they provide any input to the RPS.

   d. The actuation functions provided by AMSAC, i.e., tripping of the main turbine and starting of auxiliary feedwater pumps are diverse from the direct actuation functions provided by RPS, i.e., tripping of the reactor trip and bypass breakers.

   e. The same instrument power sources and cable tray runs may be used for the AMSAC as for the RPS. A loss of power will place the AMSAC logic into a trip condition.

2. Describe the diversity of the AMSAC from the RPS. Address such factors as manufacturers, principles of operation, sensed variables, etc.

   Response:

   Since the final design for AMSAC has not yet been completed, diversity factors such as manufacturers and principles of operation can not be fully addressed at this time. It should be noted, however, that since such diversification was not found to be required in the Westinghouse December 30, 1979 letter, it was not incorporated in the conceptual AMSAC design for IP-3.

   It is anticipated that in the case of logic cabinets such diversification could be attainable. In the case of transmitters, however, it will depend on the availability of qualified transmitters within the required time frame.

The sensed variable for AMSAC is feedwater flow. Although this variable is also associated with the RPS, no credit is taken in the FSAR safety analysis. Furthermore, as previously indicated separate sensors are used for AMSAC.

3. Describe the independence of AMSAC from systems that initiate anticipated transients being analyzed.

Response:

All components associated with AMSAC with the exception of flow elements and fittings associated with transmitter connections to the main feedwater lines, are dedicated to AMSAC and are not part of control systems or components of systems that initiate the anticipated transients being analyzed.

4. Are any AMSAC components used for other than ATWS mitigating functions (e.g., control functions)?

Response:

AMSAC components are not used for any function other than ATWS mitigating functions.

5. Discuss the independence (physical separation and electrical isolation) provided between AMSAC actuation channels.

Response:

AMSAC consists of two independent, separated and redundant actuation channels. Separate sensors (transmitters) and logic cabinets are dedicated to each channel. The two channels are brought together in the final 2 out of 2 gate (refer to attached sketch) that initiates the actuation circuitry. The coincidence is provided to prevent spurious tripping of the plant since both AMSAC channels actuate on loss of power.

6. Per safety system criteria, the AMSAC permissive (AMSAC actuation blocked below 50% power) should be automatically removed. Provide the basis for not automatically removing this bypass. Describe the indication of bypass provided.

Response:

As indicated in the conceptual design description submitted to the staff on March 16, 1981, the AMSAC permissive will be manually applied or removed from the control room under operating procedure guidelines.

This position is based on the recommendations provided in subsection 9.3.12 of the Westinghouse letter of December 30, 1979. Furthermore, since the P-8 permissive circuitry is associated with the RPS, the manual operation will avoid any interaction between AMSAC and RPS. An automatic alternative will increase the complexity of the circuitry without any added benefits.

An indicating light will be provided in the control room to continuously indicate the bypassing of AMSAC.

7. Identify the periodic surveillance planned (test and frequency) to assure AMSAC operability.

Response:

The periodic surveillance and maintenance program for AMSAC has not yet been developed. This program will depend on the type of equipment that will be finally selected as well as on manufacturer's recommendations.

It is anticipated that the surveillance and testing program will be similar to that used for the RPS.

8. Address the qualification of the AMSAC equipment/components.

Response:

All AMSAC equipment will be qualified to IEEE-323-1974 and IEEE-344-1975 for the specific normal and accident conditions at the designated equipment locations.

9. Provide elementary schematic/wiring diagrams for the Indian Point Unit 3 AMSAC showing:

a. initiation circuits
b. annunication/indication circuits
c. permissive (50% power)
d. any manual overrides/resets

Response:

Since the final design has not yet been completed, the above drawings are not available for submittal. The AMSAC Logic Diagram, however, has been finalized and it has been attached for your review.

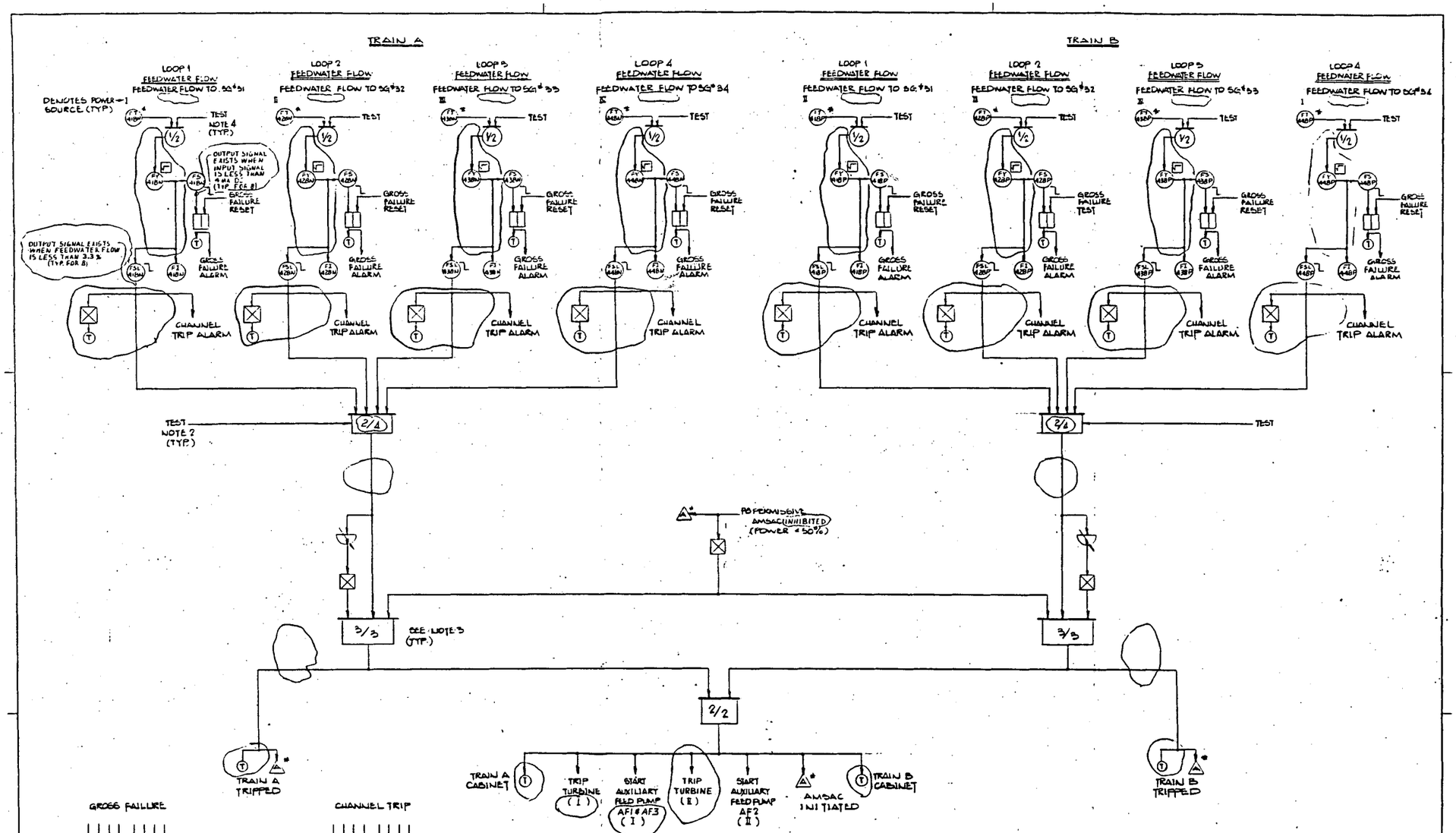

NOTES:

1. ITEMS DENOTED BY * ARE SUPPLIED BY OTHERS. ALL OTHER INDICATING LIGHTS, ALARMS, & HARDWARE ARE SUPPLIED WITH AMSAC CABINET.
2. A TEST SELECTOR SWITCH & TEST PUSHBUTTON SHALL BE PROVIDED FOR EACH LOGIC TRAIN. THE TEST SELECTOR SWITCH SHALL BE A MULTI-POSITION SWITCH THAT WILL ALLOW TESTING OF ALL RELAY COMBINATIONS THAT WILL GIVE A LOGIC (1) OUTPUT FOR THE 2/4 LOGIC GATE.
3. OUTPUT RELAYS SHALL INITIATE START SIGNAL ON LOSS OF POWER. TRAIN A & TRAIN B OUTPUT RELAYS SHALL BE POWERED FROM SEPARATE SOURCES.
4. A CALIBRATION SIGNAL WITH OUTPUT METER SHALL BE PROVIDED TO CHECK TRIP SET POINTS.
5. FOR SYMBOL DEFINITION, REFER TO WESTINGHOUSE DWG NO 5651D72.

SAFETY RELATED ITEM

REV	DATE	DESCRIPTION	DRAWN	CHK	APPD
1	7/2/81	FOR INQUIRY			
0	5/1/81	FIRST ISSUE FOR INQUIRY			

ENGINEER
STATE REG. NEW YORK NO 45176

ATWS MITIGATING SYSTEMS ACTUATION CIRCUITRY (AMSAC) LOGIC DIAGRAM

POWER AUTHORITY OF THE STATE OF NEW YORK
INDIAN POINT NUCLEAR GENERATING STATION
UNIT NO 3 WAH-121

SCALE: NONE

6606.215-D-1

REV	STRUCT	NUCL	ELEC	CAE
0		D.E.S.		