POWER AUTHORITY OF THE STATE OF NEW YORK

10 COLUMBUS CIRCLE NEW YORK, N. Y. 10019

(212) 397-6200

TRUSTEES

FREDERICK R. CLARK
CHAIRMAN

GEORGE L. INGALLS
VICE CHAIRMAN

RICHARD M. FLYNN

ROBERT I. MILLONZI

WILLIAM F. LUDDY

GEORGE T. BERRY
EXECUTIVE DIRECTOR

LEWIS R. BENNETT
GENERAL COUNSEL AND ASSISTANT EXECUTIVE DIRECTOR

JOSEPH R. SCHMIEDER
CHIEF ENGINEER

JOHN W. BOSTON
DIRECTOR OF POWER OPERATIONS

THOMAS F. McCRANN, JR.
CONTROLLER

July 3, 1979
IPN-79-44

Director, Office of Nuclear Reactor Regulation
U. S. Nuclear Regulatory Commission
Washington, D. C. 20555

Attention: Mr. Albert Schwencer, Chief
Operating Reactors Branch 6
Division of Operating Reactors

REGULATORY DOCKET FILE COPY

Subject: Indian Point 3 Nuclear Power Plant
Docket No. 50-286
Information Requested on PWR
Feedwater Lines

Dear Sir:

In response to your letter of May 25, 1979, which was received by the Authority on June 14, 1979, enclosed please find the information requested for the subject item in accordance with 10 CFR §50.54(f).

Very truly yours,

Paul J. Early
Assistant Chief Engineer-Projects

Subscribed and sworn to before me this 3 day of July, 1979.

Ruth G. Zapf
Notary Public

RUTH G. ZAPF
Notary Public, State of New York
No. 30-4663428
Qualified in Nassau County
Commission Expires March 30, 1980

Note: Drawings To Reg Files

7907100590

A001
S 1/1

INFORMATION REQUESTED ON PWR FEEDWATER LINES IN NRC REQUEST OF MAY 25, 1979

POWER AUTHORITY OF THE STATE OF NEW YORK

INDIAN POINT 3 NUCLEAR POWER PLANT

DOCKET NO. 50-286

JULY 3, 1979

Design

1. Provide as-built piping or isometric drawings of the feedwater line to steam generator sparger within containment. Show details of the design such as dimensions, pipe schedule, support type and locations, pipe restraints, and valve(s).

Response

The enclosed drawings #9321-F-50043-4 and 9321-F-50033-4 provide the requested information. These drawings are labeled "as-built", however, it should be noted that these drawings have not been verified as such by the current piping system verification program that is on-going at the site. These drawings will be verified during the upcoming refueling outage scheduled to begin on September 15, 1979.

Design

2. Provide the results of any stress or fatigue analyses which was performed for this system.

Response

The seismic analysis results of the feedwater lines are presented on the attached Westinghouse sketches. These sketches show stresses at various points in the lines and all frequencies less than 25 HZ associated with the line are tabulated on the sketch. The United Engineers & Constructors stress report for the feedwater lines is also attached.

TITLE			PAGE
FEEDWATER - STRESSES + FREQ			3 OF
PROJECT: INT	AUTHOR: R.C. LEWIS 6/20/79	CHK'D. BY: Pierce-Nash 6/20/79	CHK'D. BY: RB-N
S.O.	CALC. NO.	FILE NO.	GROUP

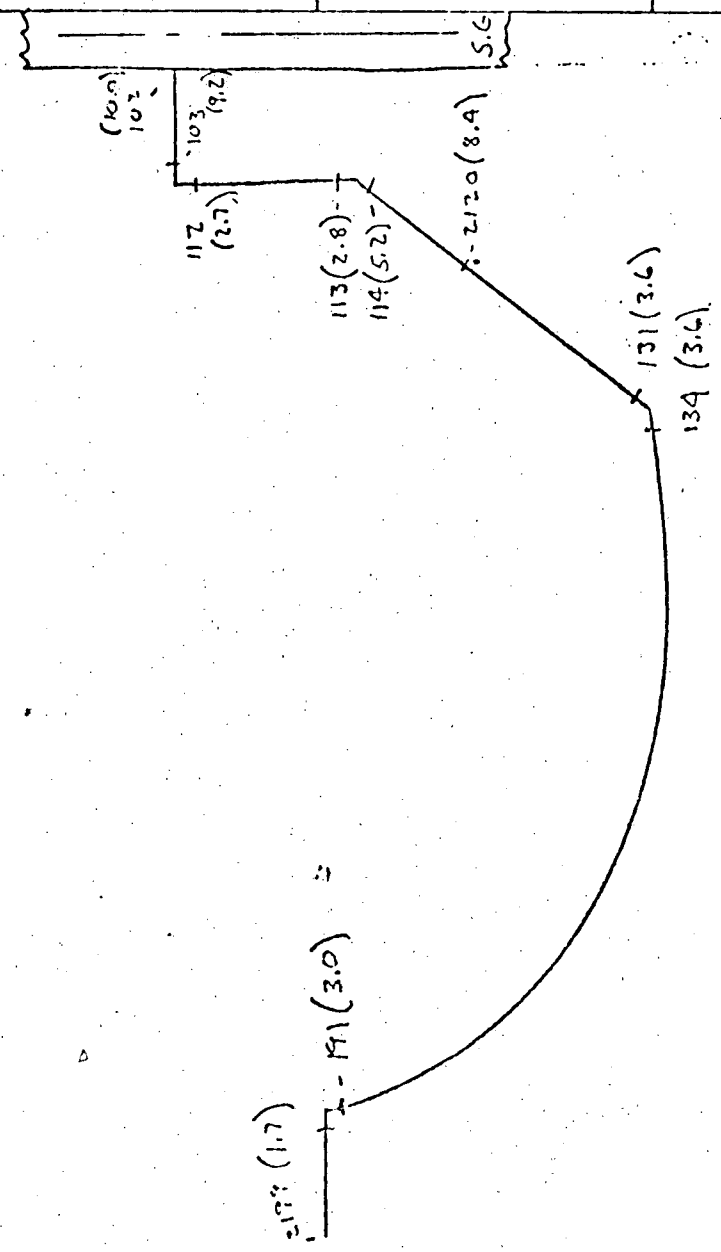

FREQ (HZ)
4.6
7.4
10.0
12.5
15.6
27.9

FEEDWATER LINE 31

NOTE: STRESSES ARE IN ( ), KSI

REV. NO.	REV. DATE	AUTHOR	DATE	CHK'D. BY	DATE	CHK'D. BY	DATE

WESTINGHOUSE NUCLEAR TECHNOLOGY DIVISION

TITLE			PAGE
FEEDWATER - STRESSES + FREQ			4 OF
PROJECT: INT	AUTHOR: R.P. Lewis 6/20/77	CHK'D. BY: R.Price-Nash 6/20/77	CHK'D. BY: RB-N DATE
S.O.	CALC. NO.	FILE NO.	GROUP

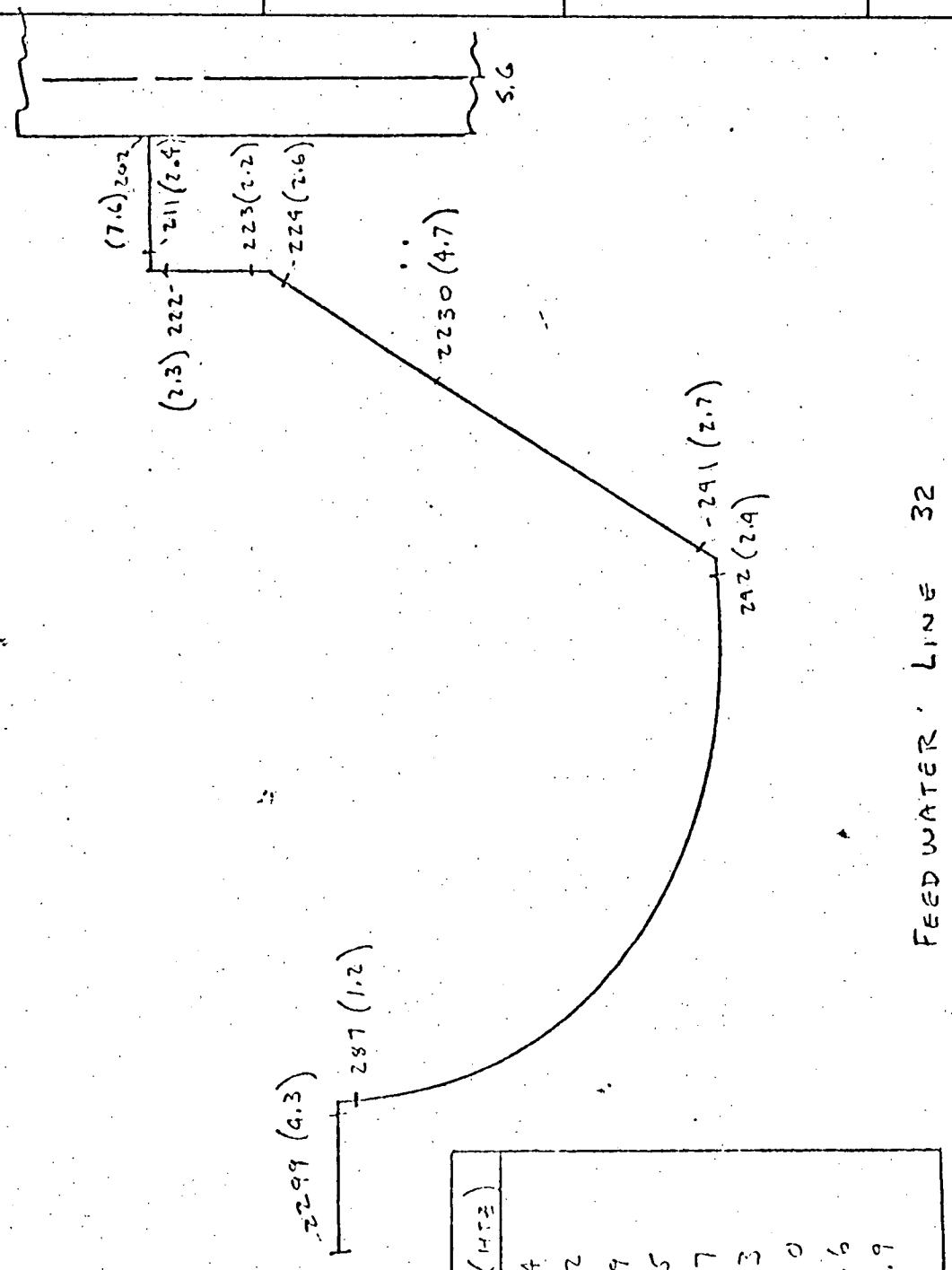

FREQ (HZ)
3.4
4.2
5.9
8.5
9.7
12.3
16.0
17.6
18.9

FEEDWATER LINE 32

NOTE: STRESSES ARE IN ( ), KSI

REV. NO.	REV. DATE	AUTHOR	DATE	CHK'D. BY	DATE	CHK'D. BY	DATE

WESTINGHOUSE FORM 5521.10

TITLE				PAGE
FEEDWATER - STRESSES + FREQ				5 OF
PROJECT	AUTHOR / DATE	CHK'D. BY / DATE	CHK'D. BY / DATE	
INT	R.C. Lewis 6/20/79	P.K. Dre-Nash 6-20-79	PB-1)	
S.O.	CALC. NO.	FILE NO.	GROUP	

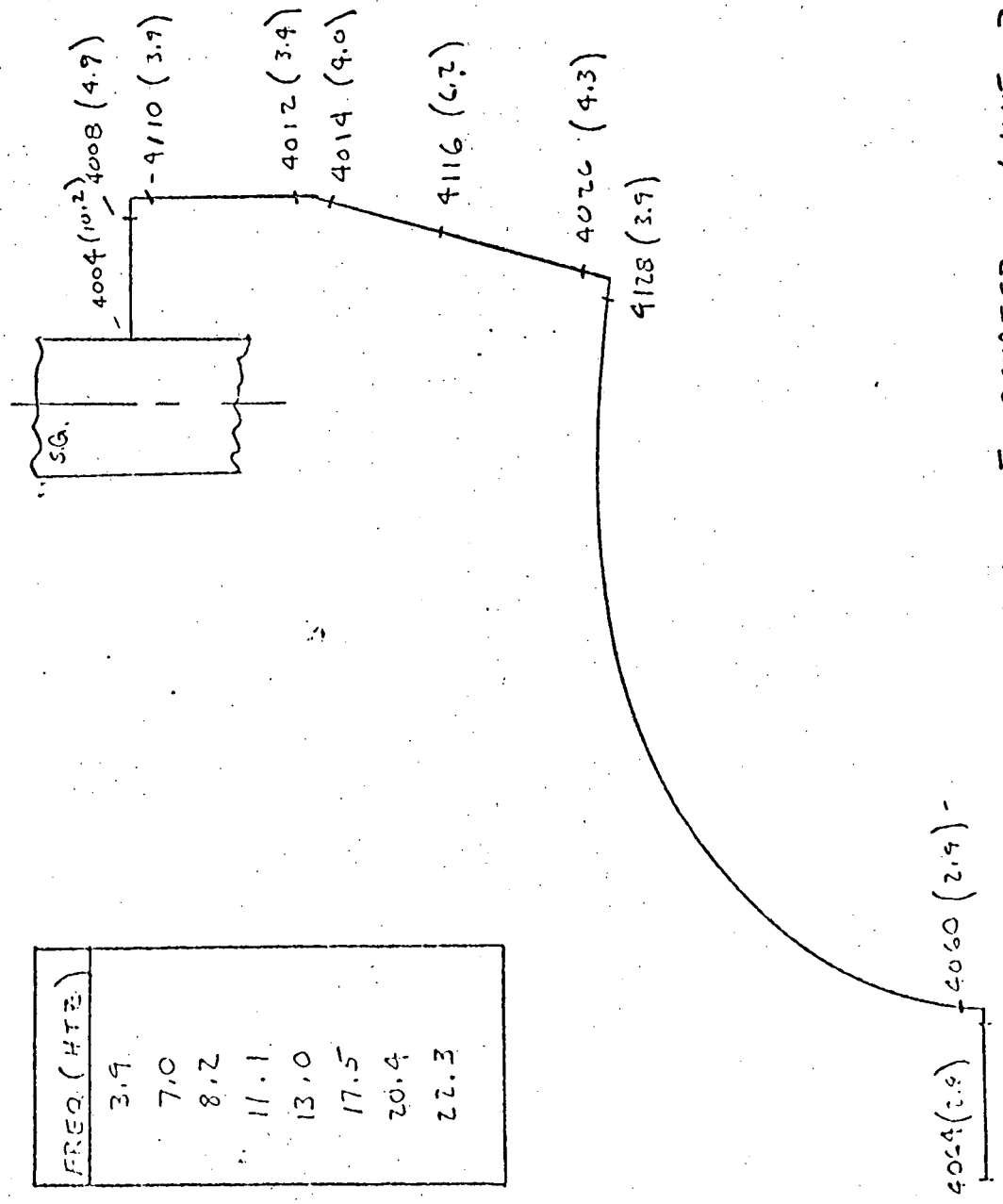

FREQ. (HTZ)
3.9
7.0
8.2
11.1
13.0
17.5
20.4
22.3

FEEDWATER LINE 33

NOTE: STRESSES ARE IN ( ), KSI

REV. NO.	REV. DATE	AUTHOR / DATE	CHK'D. BY / DATE	CHK'D. BY / DATE

TITLE			PAGE
FEEDWATER - STRESSES + FREQ			2 OF
PROJECT: INT	AUTHOR: R. C. Lewis 6/20/1- DATE	CHK'D. BY: R. Rice-Nash 6/20/1- DATE	CHK'D. BY: RB-N DATE
S.O.	CALC. NO.	FILE NO.	GROUP

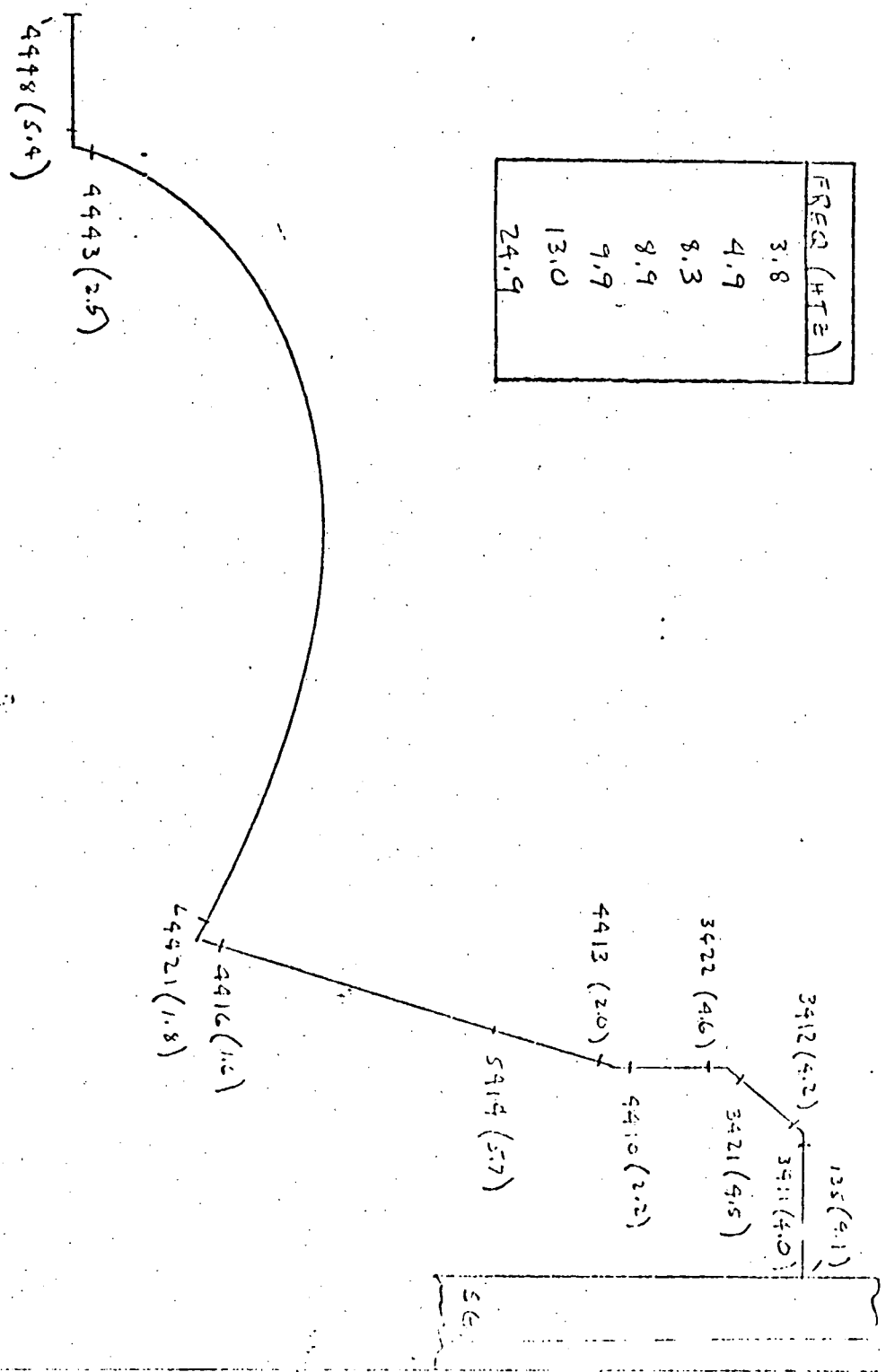

FREQ (HTZ)
3.8
4.9
8.3
8.9
9.9
13.0
24.9

NOTE: STRESSES ARE IN ( ) KSI.

FEEDWATER LINE 34

REV. NO.	REV. DATE	AUTHOR DATE	CHK'D. BY DATE	CHK'D. BY DATE

WESTINGHOUSE ELECTRIC CORPORATION

INDIAN POINT GENERATING STATION - UNIT No.3 - CONSOLIDATED EDISON COMPANY

CLASS I LINE STRESS REPORT

UNITED ENGINEERS & CONSTRUCTORS INC.- J.O. 9321.66

Form 10.72

1. Line No.: 5 (INSIDE CONT. BLDG) 2. Piping System: BOILER FEED DISCH. (GEN. #32)

3. W.E.C.C. Dwg. No.: 9321 - F - 50033 Rev. 4

4. System Conditions:	I	II	III	IV	V
Temperature (°F)	450	—	—	—	—
Design Pressure (PSI)	1085	—	—	—	—

5. Pipe Data:				
Nom. Size (IN)		18.0		
Schedule or Wall Thkn. (IN)		SCH 80		
Material ASTM		A106,GRC		
Material Spec. No.		D-2		
Contents		WATER		
Insulation		2½"		

6. Max. Stress Levels (PSI) and Equation				
D - Deadweight		2,365 @ Pt.60		
T - Thermal (Max. for all Cond.)		11,370 @ Pt.10		
P - Pressure (Longitudinal)		5,710		
E - Earthquake (OBE)	(1)	7,600 @ Pt.5		
T° - Thermal Transient		—		
P° - Pressure Transient		—		
E' - Earthquake (DBE)		12,640 @ Pt.5		
F' - Pipe Rupture	(2)	27,100 @ Pt.60		
F'A - Safeguard Loading	(3)	NOT APPLICABLE		

7. Combinations-Category (PSI)				
Normal:	$F = D + P \leq S_h$	8,085		
	$F = T \leq S_A$	11,370		
Upset:	$F = D + P + P^\circ \leq 1.25_h$	—		
	$F = D + P + E \leq 1.25_h$	15,685		
	$F = T^\circ \leq S_A$	—		
	$F = D + P + F'_A \leq 1.25_h$	—		
	$F = D + P + F'_A + E \leq 1.25_h$	—		
Emergency:	$F = D + P + E' \leq K_B$	12,735		
	$F = D + P + F'_A + E' \leq K_B$	—		
Faulted:	$F = D + F' \leq K_B$	[illegible]		
	$F = D + F' + E' \leq K_B$	—		

Line: 5 (INSIDE CONT.)

Form 10.72

Page 2/2

8. Stresses Obtained by:	D	T	P	E	T*	P*	E'	[illegible]	P'
Computer Analysis (Program Used):	[illegible]	[illegible]	—	[illegible]	—	—	—	[illegible]	—
Simplified Methods or Hand Calc.:	—	—	[illegible]	—	—	—	X	—	X

9. Code Allowable Stresses (PSI):	Material ASTM	Min. Temp. S_c	Max. Temp. S_h	Yield Strength S_y
	A-105, GRC	17,500	17,500	33,350

10. Stress Limits: (PSI)			
	Stress Range:	$S_A = f(1.25S_c + .25S_h)$	26,250
	Additive Stresses:	$1.2\ S_h$	21,000
Primary Stresses	Membrane Stress: (Greater of:)	$K_B = 1.2\ S_h$	
		$K_B = 0.8\ S_y$	
	Membrane + Bending Stress: (Greater of:)	$K_B = 1.8\ S_h$	31,500
		$K_B = 1.0\ S_y$	33,350

11. Stress Analyst: (Signature)	Thermal & Weight	Seismic	Engineer - State Reg. No.
	G. FOX	K.R. BUCKEY	[illegible] N.Y. PE-052342

12. Remarks:

1) SEISMIC ANALYSIS PERFORMED BY [illegible], RESULTS TRANSMITTED TO U.E.&C. DEC. 27, 1972, LETTER EUP-233, IRP-4351.
2) FOR FWR CALCULATIONS SEE ATTACHEMENT 5.
3) R.C. LOOP RUPTURE ANALYSIS PERFORMED TO EVALUATE IMPACT OF LOOP RUPTURE ON FEED DISCH PIPING.

REFERENCES:

1. Power Piping Code USAS B.31.1.0. - 1967
2. ASME Boiler and Pressure Vessel Code - Section VIII
3. Criteria for Design of Class I Piping System INP - 3 by W
4. Seismic Response Curves for Class I Building for INP - 3 by W

Seismic Response Curves Used:	Direction	OBE	DBE
	N - S 1 - 2	EL. 94' & 46'	EL. 94' & 46'
	E - W 2 - 3	EL. 94' & 46'	EL. 94' & 46'

ATTACHMENTS:

1. Isometric Drawing No.: 9321-F-50033
2. Computer Printouts Dated: Thermal, Cond. 5.3.74, 5.7.74
   Weight: 5.9.74, 5.10.74
   Seismic(N-S): ——
3. List of Loads on Supports Dated: Thermal: ——
   Weight: ——
   Seismic (Max.): ——
   Whip Restraints: ——

[illegible] LOOP RUPTURE [illegible]

5 (INSIDE COUT.)

Attach. 462

WESTINGHOUSE ELECTRIC CORPORATION

INDIAN POINT GENERATING STATION - UNIT No.3 - CONSOLIDATED EDISON COMPANY

CLASS I LINE STRESS REPORT

UNITED ENGINEERS & CONSTRUCTORS INC.- J.O. 9321.66

Form 10.72

1. Line No.: 6 (INSIDE CONT. BLDG) 2. Piping System: BOILER FEED DISCH. (GEN. #31)

U.E.&C. Dwg. No.: 9321 - F - 50033 Rev. 4

4. System Conditions:	I	II	III	IV	V
Temperature (°F)	450	—	—	—	—
Design Pressure (PSI)	1085	—	—	—	—

5. Pipe Data:			
Nom. Size (IN)	18.0		
Schedule or Wall Thkn. (IN)	SCH 60		
Material ASTM	A106, GR C		
Material Spec. No.	B-2		
Contents	WATER		
Insulation	2½"		

6. Max. Stress Levels (PSI) and Location				
D - Deadweight		612 @ PT. 40		
T - Thermal (Max. for all Cond.)		10,881 @ PT. 40		
P - Pressure (Longitudinal)		5,710		
E - Earthquake (OBE)	(1)	10,000 @ PT. 5		
T° - Thermal Transient		—		
P° - Pressure Transient		—		
E' - Earthquake (DBE)		14,000 @ PT. 5		
P' - Pipe Rupture	(2)	20,200 @ PT. 50		
P_A' - Safeguard Loading	(3)	NOT APPLICABLE		

7. Allowed Combinations-Category (PSI)					
Normal:	$F = D + P \leq S_h$	6,532			
	$F = T \leq S_A$	10,881			
Upset:	$F = D + P + P^\circ \leq 1.2S_h$	—			
	$F = D + P + E \leq 1.2S_h$	16,532			
	$F = T^\circ \leq S_A$	—			
	$F = D + P + P_A' \leq 1.2S_h$	—			
	$F = D + P + P_A' + E \leq 1.2S_h$	—			
Emergency:	$F = D + P + E' \leq K_B$	20,532			
	$F = D + P + P_A' + E' \leq K_B$	—			
Faulted:	$F = D + P' \leq K_B$	21,022			
	$F = D + P' + E' \leq K_B$	—			

Line: 6 (INSIDE CONT.)

U.E.&C. Proc. 1133

Form 10.72

Page 2/2

8. Stresses Obtained by:	D	T	P	E	T*	P*	E'	E'_h	F'
Computer Analysis (Program Used):	WELKO	WELKO	—	WESTDYN	—	—	—	WELKO	—
Simplified Methods or Hand Calc.:	—	—	B31.1.	—	—	—	X	—	X

9. Code Allowable Stresses (PSI):	Material ASTM	Min. Temp. S_c	Max. Temp. S_h	Yield Strength S_y
	A-106, GR C	17,500	17,500	33,350

10. Stress Limits: (PSI)			
	Stress Range:	$S_A = f(1.25S_c + .25S_h)$	26,250
	Additive Stresses:	$1.2\ S_h$	21,000
Emergency & Faulted Cat.	Membrane Stress: (Greater of:)	$K_B = 1.2\ S_h$	
		$K_B = 0.8\ S_y$	
	Membrane + Bending Stress: (Greater of:)	$K_B = 1.8\ S_h$	31,500
		$K_B = 1.0\ S_y$	33,350

11. Stress Analyst: (Signature)	Thermal & Weight	Seismic	Engineer - State Reg. No.
	G. FOX	K.R. BARKEY	[signature] MN PE-'052342

12. Remarks:

(1) SEISMIC ANALYSIS PERFORMED BY (B), RESULTS TRANSMITTED TO U.E.&C. DEC. 27, 1972, LETTER EVP-230, EPP-4261.
(2) FOR PWR CALCULATIONS SEE ATTACHEMENT 5.
(3) R.C. LOOP RUPTURE ANALYSIS PERFORMED TO EVALUATE IMPACT OF LOOP RUPTURE ON FEED DISCH. PIPING.

REFERENCES:

1. Power Piping Code USAS B.31.1.0. - 1967
2. ASME Boiler and Pressure Vessel Code - Section VIII
3. Criteria for Design of Class I Piping System INP - 3 by H
4. Seismic Response Curves for Class I Building for INP - 3 by H

Seismic Response Curves Used:	Direction	OBE	DBE
	N - S 1 - 2	EL. 94' & 46'	EL. 94' & 46'
	E - W 2 - 3	EL. 94' & 46'	EL. 94' & 46'

ATTACHMENTS:

1. Isometric Drawing No.: 9321-F-50033
2. Computer Printouts Dated: Thermal, Cond. 11.20.72, 11.21.72; Weight: 11.21.72; Seismic(N-S): ——
3. List of Loads on Supports Dated: Thermal: ——; Weight: ——; Seismic (Max.): ——; Whip Restraints: ——

FINAL ISSUE
APPROVED [signature]
DATE FEB 2 1973

4. MAIN LOOP RUPTURE LOAD COMP. RUNS DATED: [illegible]
5. PWR CALCULATIONS (INSIDE CONT.) PAGE 153 TO 172.

Attachment 6 (INSIDE CONT.)

WESTINGHOUSE ELECTRIC CORPORATION

INDIAN POINT GENERATING STATION - UNIT No.3 - CONSOLIDATED EDISON COMPANY

CLASS I LINE STRESS REPORT

UNITED ENGINEERS & CONSTRUCTORS INC.- J.O. 9321.66

Form 10.72

1. Line No.: 7 (INSIDE CONT. BLDG)

2. Piping System: BOILER FEED DISCH. (GEN. #33)

3. U.E.&C. Dwg. No.: 9321 - F - 50043 Rev. 4

4. System Conditions:	I	II	III	IV	V
Temperature (°F)	450	—	—	—	—
Design Pressure (PSI)	1085	—	—	—	—

5. Pipe Data:				
Nom. Size (IN)		18.0		
Schedule or Wall Thkn. (IN)		SCH 60		
Material ASTM		A 106, GR C		
Material Spec. No.		B-2		
Contents		WATER		
Insulation		2 1/2"		

6. Max. Stress Levels (PSI) and Location				
D - Deadweight		2,458 @ PT. 45		
T - Thermal (Max. for all Cond.)		12,936 @ PT. 5		
P - Pressure (Longitudinal)		5,710		
E - Earthquake (OBE)	(1)	10,200 @ PT. 5		
T° - Thermal Transient		—		
P° - Pressure Transient		—		
E' - Earthquake (DBE)		14,280 @ PT. 5		
P' - Pipe Rupture	(2)	30,200 @ PT. 20		
P'_A - Safeguard Loading	(3)	NOT APPLICABLE		

7. Load Combinations-Category (PSI)				
Normal:	$F = D + P \leq S_h$	8,168		
	$F = T \leq S_A$	12,936		
Upset:	$F = D + P + P^\circ \leq 1.2S_h$	—		
	$F = D + P + E \leq 1.2S_h$	18,368		
	$F = T^\circ \leq S_A$	—		
	$F = D + P + P'_A \leq 1.2S_h$	—		
	$F = D + P + P'_A + E \leq 1.2S_h$	—		
Emergency:	$F = D + P + E' \leq K_B$	22,443		
	$F = D + P + P'_A + E' \leq K_B$	—		
Faulted:	$F = D + P' \leq K_B$	32,658		
	$F = D + P' + E' \leq K_B$	—		

A.P.E.D. Prob. 4044 Line: 7 (INSIDE CONT.)

Form 10.72

Page 2/2

8. Stresses Obtained by:	D	T	P	E	T^e	P^e	E^e	P'_A	P'
Computer Analysis (Program Used):	K 1140	1E140	—	1E140	—	—	—	1E140	—
Simplified Methods or Hand Calc.:	—	—	831.1.	—	—	—	X	—	X

9. Code Allowable Stresses (PSI):	Material ASTM	Min. Temp. S_c	Max. Temp. S_h	Yield Strength S_y
	A-106, 62C	17,500	17,500	33,350

10. Stress Limits: (PSI)			
	Stress Range:	$S_A = f(1.25S_c + .25S_h)$	26,250
	Additive Stresses:	$1.2\ S_h$	21,000
Emergency & Faulted Cat.	Membrane Stress: (Greater of:)	$K_B = 1.2\ S_h$	
		$K_B = 0.8\ S_y$	
	Membrane + Bending Stress: (Greater of:)	$K_B = 1.8\ S_h$	31,500
		$K_B = 1.0\ S_y$	33,350

11. Stress Analyst: (Signature)	Thermal & Weight	Seismic	Engineer - State Reg. No.
	C. KLEIN	K.R. DIKEY (W)	N.Y. PE - 052342

12. Remarks:
1) SEISMIC ANALYSIS PERFORMED BY (W). RESULTS TRANSMITTED TO U.E.&C. DEC. 27, 1972, LETTER EUP-229, IPP-4361.
2) FOR PWR CALCULATIONS SEE ATTACHEMENT 5.
3) R-C. 100% RUPTURE ANALYSIS PERFORMED TO EVALUATE IMPACT OF 100% RUPTURE ON FEED DISCH. PIPING.

REFERENCES:
1. Power Piping Code USAS B.31.1.0. - 1967
2. ASME Boiler and Pressure Vessel Code - Section VIII
3. Criteria for Design of Class I Piping System IMP - 3 by W
4. Seismic Response Curves for Class I Building for IMP - 3 by W

Seismic Response Curves Used:	Direction	OBE	DBE
	N - S 1 - 2	El. 94' & 46'	El. 94' & 46'
	E - W 2 - 3	El. 94' & 46'	El. 94' & 46'

ATTACHMENTS:
1. Isometric Drawing No.: 9321-F-50043
2. Computer Printouts Dated: Thermal, Cond. 11.20.72, 11.21.72; Weight: 11.20.72, 11.21.72; Seismic (N-S): ——; (E-W): ——
3. List of Loads on Supports Dated: Thermal: ——; Weight: ——; Seismic (Max.): ——; Whip Restraints: ——
4. NSSS 100% RUPTURE LOAD, COMP. RUN DATED 10.10.72, 10.10.72
5. PWR CALCULATIONS (INSIDE CONT.) PAGE 180 TO 203.

FINAL ISSUE
APPROVED
DATE FEB 24 '73

A.P.R.D. Prob. 264 Line 7 (INSIDE CONT.)

WESTINGHOUSE ELECTRIC CORPORATION

INDIAN POINT GENERATING STATION - UNIT No.3 - CONSOLIDATED EDISON COMPANY

CLASS I LINE STRESS REPORT

UNITED ENGINEERS & CONSTRUCTORS INC.- J.O. 9321.66

Form 10.72

1. Line No.: 8 (INSIDE CONT. BLDG) | 2. Piping System: BOILER FEED DISCH. (GEN. #34)

3. U.E.&C. Dwg. No.: 9321 - F - 50043 Rev. 4

4. System Conditions:	I	II	III	IV	V
Temperature (°F)	450	—	—	—	—
Design Pressure (PSI)	1085	—	—	—	—

5. Pipe Data:				
Nom. Size (IN)		18.0		
Schedule or Wall Thkn. (IN)		SCH 60		
Material ASTM		A106, GRC		
Material Spec. No.		B-2		
Contents		WATER		
Insulation		2½"		

6. Max. Stress Levels (PSI) and Location				
D - Deadweight		2,471 @ PT. 50		
T - Thermal (Max. for all Cond.)		10,057 @ PT. 15		
P - Pressure (Longitudinal)		5,710		
E - Earthquake (OBE)	(1)	9,100 @ PT. 5		
T° - Thermal Transient		—		
P° - Pressure Transient		—		
E' - Earthquake (DBE)		12,740 @ PT. 5		
P' - Pipe Rupture	(2)	25,700 @ PT. 25		
P'_A - Safeguard Loading	(3)	NOT APPLICABLE		

7. Load Combinations-Category (PSI)				
Normal:	$F = D + P \leq S_h$	8,181		
	$F = T \leq S_A$	10,057		
Upset:	$F = D + P + P^\circ \leq 1.2S_h$	—		
	$F = D + P + E \leq 1.2S_h$	17,281		
	$F = T^\circ \leq S_A$	—		
	$F = D + P + P'_A \leq 1.2S_h$	—		
	$F = D + P + P'_A + E \leq 1.2S_h$	—		
Emergency:	$F = D + P + E' \leq K_B$	20,921		
	$F = D + P + P'_A + E' \leq K_B$	—		
Faulted:	$F = D + P' \leq K_B$	28,171		
	$F = D + P' + P'_A \leq K_B$	—		

L.P.R.D. Prob. 485 Line: 8 (INSIDE CONT.)

Form 10.72

Page 2/2

3. Stresses Obtained by:	D	T	P	E	T'	P'	E'	M'	F'
Computer Analysis (Program Used):	[illegible]	[illegible]	—	[illegible]	—	—	—	[illegible]	—
Simplified Methods or Hand Calc.:	—	—	B31.1	—	—	—	X	—	X

9. Code Allowable Stresses (PSI):	Material ASTM	Min. Temp. S_c	Max. Temp. S_h	Yield Strength S_y
	A 106, GRC	17,500	17,500	33,350

10. Stress Limits: (PSI)			
	Stress Range:	$S_A = f(1.25S_c + .25S_h)$	26,250
	Additive Stresses:	$1.2\ S_h$	21,000
Emergency / Faulted Cat.	Membrane Stress: (Greater of:)	$K_B = 1.2\ S_h$	
		$K_B = 0.8\ S_y$	
	Membrane + Bending Stress: (Greater of:)	$K_B = 1.8\ S_h$	31,500
		$K_B = 1.0\ S_y$	33,350

11. Stress Analyst: (Signature)	Thermal & Weight	Seismic	Engineer - State Reg. No.
	C. KLEIN	K.R. DARKEY (PE)	[signature] N.Y. PE - 052342

12. Remarks:
1) SEISMIC ANALYSIS PERFORMED BY [illegible], RESULTS TRANSMITTED TO U.E.&C. DEC. 27, 1972, LETTER EVP-239, IPP-4361.
2) FOR PWR CALCULATIONS SEE ATTACHEMENT 5.
3) R.C. LOOP RUPTURE ANALYSIS PERFORMED TO EVALUATE IMPACT OF LOOP RUPTURE ON FEED DISCH. PIPING.

REFERENCES:
1. Power Piping Code USAS B.31.1.0. - 1967
2. ASME Boiler and Pressure Vessel Code - Section VIII
3. Criteria for Design of Class I Piping System INP - 3 by W
4. Seismic Response Curves for Class I Building for INP - 3 by W

Seismic Response Curves Used:	Direction	OBE	DBE
	N - S 1 - 2	EL. 94' & 46'	EL. 94' & 46'
	E - W 2 - 3	EL. 94' & 46'	EL. 94' & 46'

ATTACHMENTS:
1. Isometric Drawing No.: 9321-F-50043
2. Computer Printouts Dated: Thermal, Cond. 5.7.74, 5.9.74
   Weight: 5.9.74, 5.9.74
   Seismic (N-S): ——
3. List of Loads on Supports Dated: Thermal: ——
   Weight: ——
   Seismic (Max.): ——
   Whip Restraints: ——
4. MAIN LOOP RUPTURE [illegible] DATED: [illegible]
5. [illegible] (WHIPE CONT.) [illegible]

FINAL ISSUE
APPROVED [illegible]
DATE [illegible]

Rev. 8 (WHIPE CONT.)

Fabrication History

1. Supply a list of the materials for the steam generator sparger, steam generator feedwater nozzles and feedwater piping within containment.

Response

The feedwater nozzle material is SA-336 Code Class 1332, Paragraphs 5a-5d. The steam generator thermal sleeve and feed ring material is SA-106 Grade B. The main feedwater piping material is A-106 Grade C, Schedule 80 for 18" pipe. The fittings are ASTM A-234 WPC, Butt weld Schedule 60.

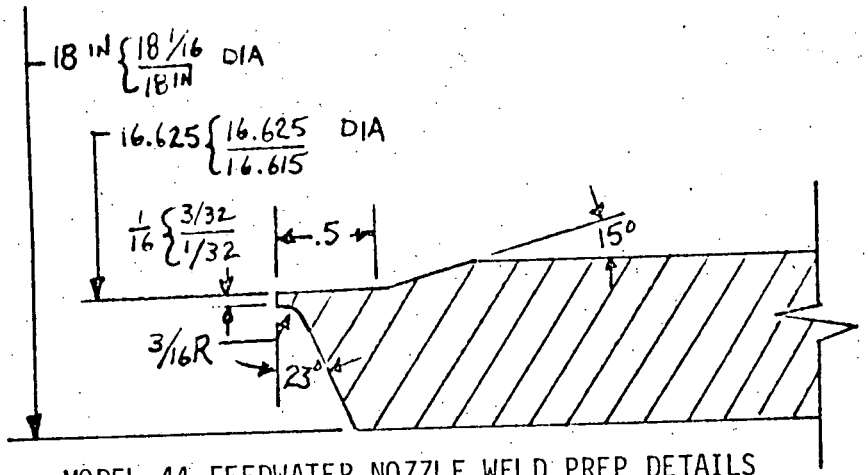

MODEL 44 FEEDWATER NOZZLE WELD PREP DETAILS

UNITED ENGINEERS & CONSTRUCTORS INC.
Philadelphia, Pennsylvania

Indian Point Generating Station - Units No. 2 and No. 3

1968

ADDENDUM NO. 1

to

Procedure Specification
Number One and Number Twenty

FIELD WELDING OF THE FIRST PASS USING INERT-GAS-TUNGSTEN ARC WELDING WITH CONSUMABLE RINGS COMPLETING THE JOINT USING MANUAL ARC WELDING

1. PROCESS: The welding shall be done with consumable insert rings using the inert-gas-tungsten arc process (TIG) for fusing the consumable insert ring (Grinnell or EB ring) and the addition of one or two passes of TIG welding with filler metal (joints 3/8" and under completed with TIG), bal of welding with metal arc welding.

2. BASE METAL AND CONSUMABLE INSERT: Base material and consumable insert ring material shall conform to the specification of one of the materials for pipe, valves, fittings and flanges listed in Group P-1 of Table Q-11.1, Section IX of the ASME Boiler and Pressure Vessel Code.

3. FILLER METAL: Bare welding rod 1/16" and 3/32" in diameter Oxweld 65 or equivalent shall be used, when required. The electrodes shall comply with ASME Specification SA-233 for iron and steel electrodes, AWS-ASTM Classification E-6010, E-7016, E-7018, Group No. F-3 and F-4, weld metal Analysis A-1, and provide physical properties in the deposited metal comparable to those of the base metal joined.

4. NATURE OF ELECTRIC CURRENT: The welding current used shall be direct current. The base material shall be on the positive side of the line (DCSP) for the inert-gas-tungsten arc welding process, and on the negative side of the line (DCRP) for the manual arc welding process.

   The welding current for the welding process shall be determined by the Field Welding Engineer.

5. POSITION: The welding shall be done in the horizontal rolled (1G), horizontal fixed (5G) and the horizontal (2G) positions as defined in Section IX of the ASME Boiler and Pressure Vessel Code.

6. JOINT PREPARATION:

(a) Before Assembly-Dimensional:- The root details of the weld preparations of the parts to be welded shall be in accordance with designs as shown on Drawings 5000-LL-1147 and 5000-L-1338 for the type of root joint selected.

(b) Consumable Insert Rings:- The material specifications for the consumable insert ring shall be similar to the parent metal.

7. ASSEMBLY OF THE JOINT WITH THE CONSUMABLE INSERT RING:

(a) All of the parts assembled shall be free from dirt, scale, grease, or any other condition which may be detrimental to the quality of the completed joint.

(b) The parts shall be assembled in such a manner that the tolerances as shown on Fig. 3 of Drawing 5000-L-1338 or Fig. 2 of Drawing 5000-LL-1147 are not exceeded.

(c) The joint shall be rigged in slight compression in order to minimize the tendency of cracking in the inert gas arc root bead.

(d) Using the consumable insert as shown on Drawing 5000-L-1338, the top of the tang of the consumable insert ring shall be flush or preferably above the nominal .045 inch adjacent weld preparation lips. When available, consumable insert ring material with 5/64" height tang should be used.

(e) Where the I.D. of the joint is accessible after completion of welding, No. 40 Kraft paper dams, secured with cellophane tape, placed 6 to 12 inches on each side of the joint, may be used. Other acceptable methods such as purge balloons may also be used. A bleed hole of 1/4" diameter shall be provided and shall be placed on the high side of the joint.

(f) Where the I.D. of the joint is not accessible, the ends of the pipe will be blocked off and the entire line purged. A bleed hope of 1/4" diameter shall be provided in the discharge end and shall be placed on the high side of the joint.

(g) Purge time will be governed by the size and length of the pipe to be purged and shall be approximately 3 to 5 volume displacements prior to welding.

8. PREHEATING: Preheating shall be required when:-

(a) When one or more parts to be welded is casting.

(b) When the ambient temperature is 60° F. or below, and the parts to be welded at this temperature have a wall thickness 1/2" or more.

eheating performed as follows

(a) Preheating shall be by electric induction or resistance method. Where physical size and/or contour does not permit the use of either of those methods, then preheat shall be accomplished by torch.

(b) Temperature shall be brought up gradually and uniformly.

(c) Preheat temperature shall be measured by attached thermocouples, contact pyrometer, or by use of "tempil sticks" if approved by Owner or his agents.

(d) Minimum preheat for low carbon steels (.15% to .20% c.) 200 F. Minimum preheat for high carbon steels (.20% to .35% c.) 500 F.

(e) The welding process may be interrupted at any time, provided that a minimum of at least 3/8" thickness of weld deposit or 25% of the welding groove is filled (whichever is the greater), and the weld is wrapped with asbestos material before permitting to cool slowly from welding temperature to room temperature.

9. WELDING TECHNIQUE (TIG):

(a) The welding shall be done by the tungsten-inert-gas (non-consumable electrode) method. The electrode used shall be 1/16" or 3/32" diameter, one to two percent thoriated tungsten. The welding operation for this procedure shall be done by manual operation. Welding with the pipe in the fixed horizontal position shall be started from the bottom overhead position, and proceed to the flat or top position. The arc shall be struck away from the consumable insert ring and brought down to it. Travel speed shall be approximately two to three inches per minute. If required, filler metal should be added during the breaking of the welding arc to fill in the arc crater and to prevent the formation of crater cracks. If used, the composition of the filler wire shall be the same as that of the consumable insert ring. The arc for gas-tungsten welding can be started either by a high frequency arc starter or on tabs.

(b) After the fusion of the insert ring has been completed satisfactorily, filler metal shall be added using the "TIG" process to complete all joints with a wall thickness up to and including 3/8". When the wall thickness is greater than 3/8", one or two TIG passes will be made with filler metal to reinforce root pass for metal arc welding.

10. MANUAL SHIELDED METAL ARC WELDING:

(a) In welding the horizontal fixed (5G) position, all welding shall proceed toward the top.

(b) In welding the vertical (2G) position, the succeeding stringer beads shall be started at the lower face of the groove and placed one above the other. Each stringer bead shall be started some distance from the point of completion of the previously deposited bead, so that no two adjacent beads in the same layer oe the next succeeding layer start or stop at the same location on the weld.

(c) Weld reinforcement shall be not less than 1/16" or more than 1/8". Reinforcement shall merge into the base material without excessive shoulder or undercut.

11. WELDING TECHNIQUE-SOCKET WELD JOINTS: Socket weld joints shall be made using either manual shielded metal arc welding or inert-gas-tungsten arc process as described in paragraphs 9 and 10, and UE&C Drawing 5000-L-1342.

12. CLEANING: All slag or flux shall be removed from each end crater by means of a light cleaning hammer before proceeding with the next electrode. Each completed bead or layer shall be thoroughly cleaned with a hand hammer and wire brush, or with an Ingersoll-Rand scaling hammer or equal, removing all weld splatter from pipe ends or surface of weld before laying down next successive bead or layer.

All defects or irregularities disclosed by inspection which would prevent proper deposition of succeeding bead, shall be removed.

13. DEFECTS: Any cracks or blowholes that appear on the surface of any bead of welding shall be completely removed by chipping or ginding before depositing the next successive bead of welding.

14. STRESS RELIEVING: The stress relieving of completed welds, when required, shall be performed in accordance with requirements of the specific construction code under which the work is conducted.

(a) Welded joints covered by ASA Power Piping Code 3/4" and over.

(b) Welded joints covered by ASME Nuclear Code 3/4" and over

(c) Welded joints covered by ASME Power Boiler Code 3/4" and over.

Stress Relieving shall be performed as follows:-

(a) The stress relieving temperature shall be 1000° F. to 1200° F. for carbon steel. Stress relieving shall consist of uniformly heating a circumferential band having a minimum width, on each side of the welded joint, of at least three times the width of the widest part of the welding groove but in no case less than twice the width of the weld reinforcement.

(b) The welded joint shall be brought up slowly, 400° F. per hour maximum to the required temperature and held at the soaking temperature for a period of time proportioned to one hour per inch of wall thickness, but not less than one half hour and shall be allowed to cool at the rate of 200° F. per hour to 900° F. then to room temperature without removing the wrapping.

(c) Induction or resistance method shall be used to complete the stress relieving and a recording instrument shall be used to obtain a record of the stress relieving operation.

15. RECORDS: The following records are to be kept on the jobsite:

(a) Record of procedure qualification. Qualification shall be in accordance with Section IX of the ASME Boiler and Pressure Vessel Code.

(b) Record of welder qualification tests. Welders and welding operators shall be qualified in accordance with Section IX of the ASME Boiler and Pressure Vessel Code.

(c) Record of preheating and stress relieving operations.

(d) Record of fit-up and unusual joint conditions.

(e) Record of magnetic particle or liquid penetrant inspection. Magnetic particle inspection shall be in accordance with Section VIII, Appendix VI of the ASME Boiler and Pressure Vessel Code. Liquid penetrant inspection shall be performed in accordance with Section VIII, Appendix VIII of the ASME Boiler and Pressure Vessel Code. The acceptance standard shall be that defined in ASA Code Case N-10.

(f) Record of radiographic inspection. Radiographic inspection shall be performed and evaluated in accordance with Section VIII, paragraph UW-51 of the ASME Boiler and Pressure Vessel Code.

16. Sustaining procedure qualification is covered by qualification for UE&C Procedure Specification No. Twenty plus one file.

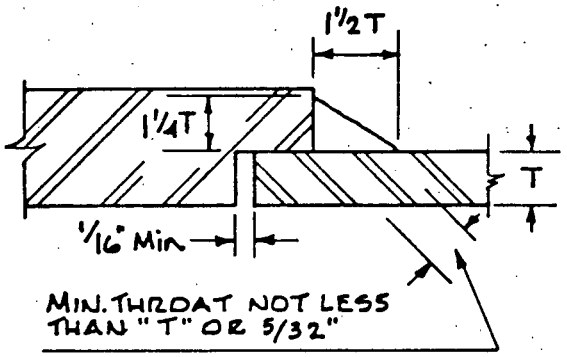

SOCKET JOINT

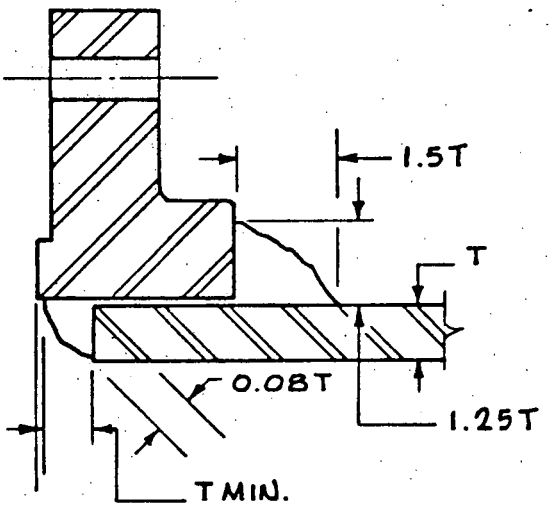

SLIP ON FLANGE

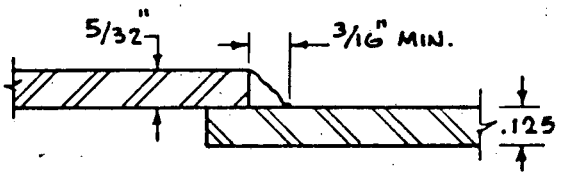

ONE BEAD
1/8" ELECTRODE

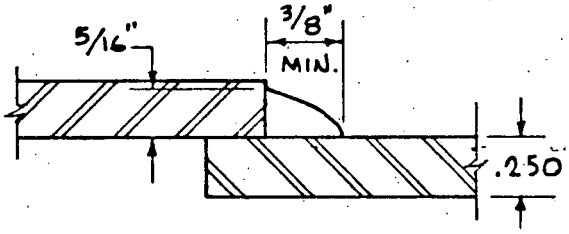

TWO BEADS
1/8" ELECTRODE

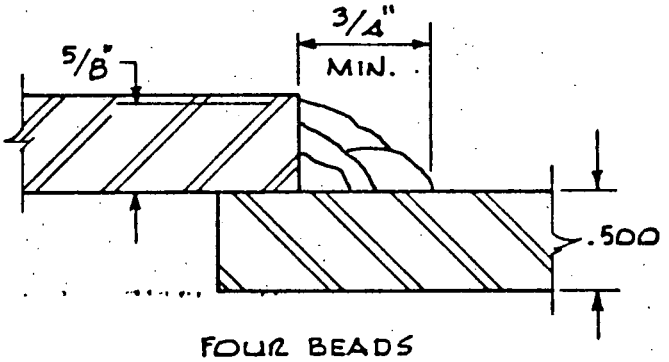

FOUR BEADS
1ST 1/8" ELECTRODE
2ND 3RD & 4TH 5/32" ELECTRODE

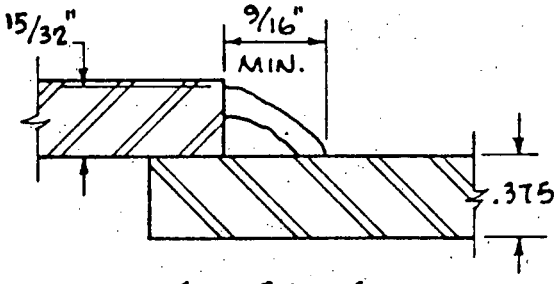

TWO BEADS
1ST. 1/8" ELECTRODE
2ND. 5/32" ELECTRODE

FILLET WELDING TECHNIQUE

HORIZONTAL ROLLING,
HORIZONTAL FIXED
OR VERTICAL POSITIONS.

UNITED ENGINEERS & CONSTRUCTORS INC.

JULY 1967

5000-L-1342

PIPE TO PIPE WELDS

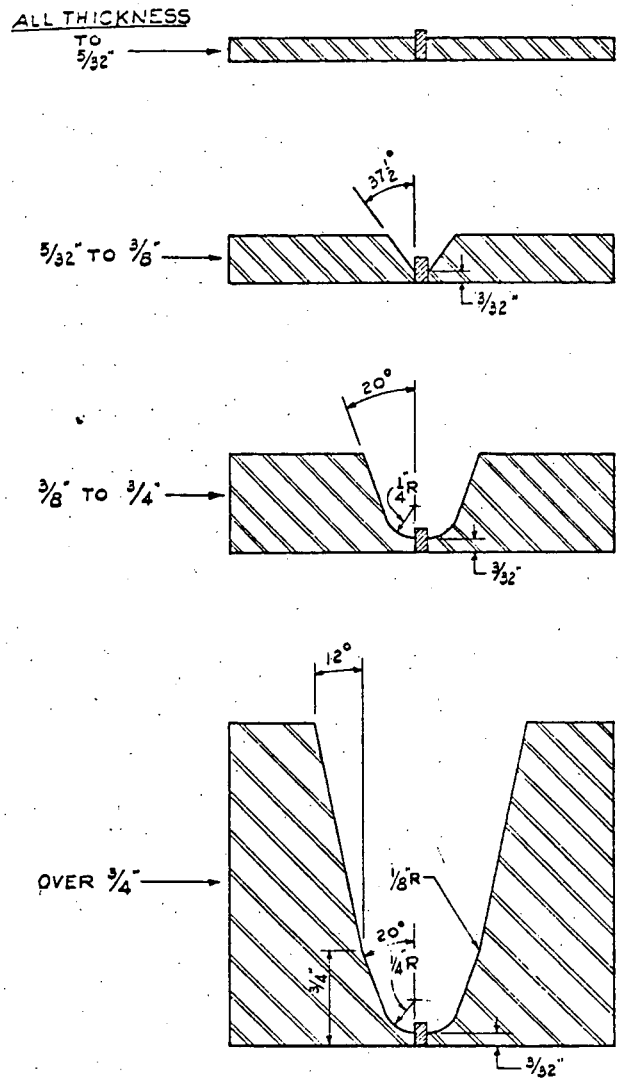

PIPE TO FORGING OR CASTING WELDS

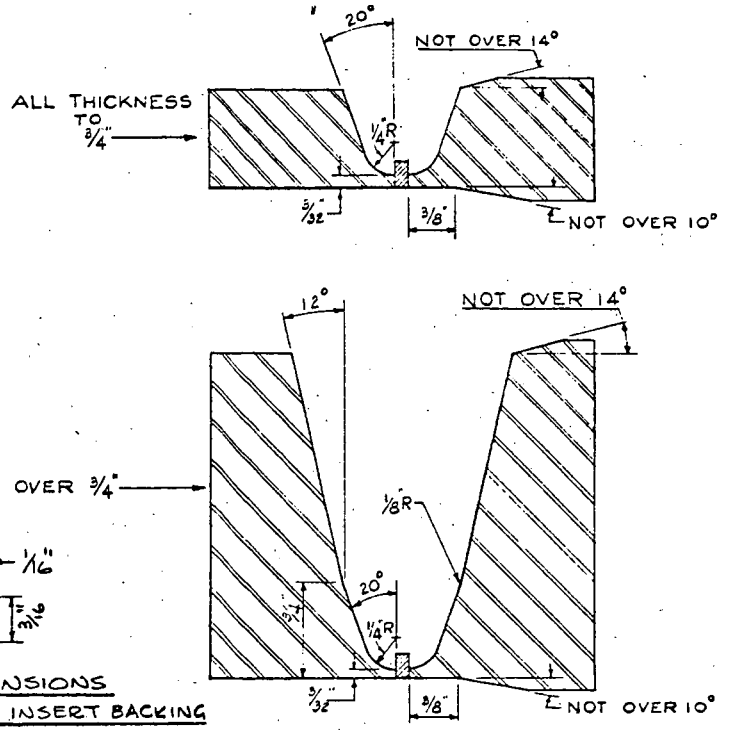

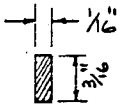

FIG 1. DIMENSIONS OF CONSUMABLE INSERT BACKING RING

MINIMUM NUMBER of TACK WELDS SHOULD BE USED ON BOTH SIDES TO HOLD BACKING IN POSITION.

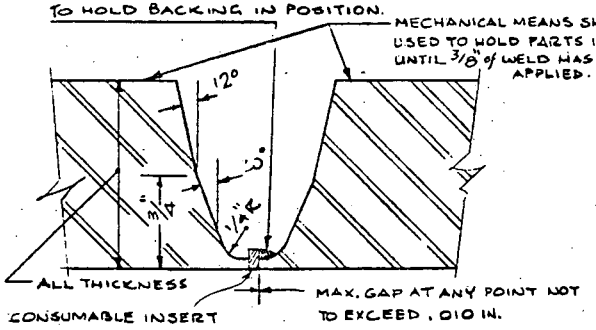

FIG. 2 PARTS ASSEMBLY

NOTES:

RING I.D. = PIPE I.D. - 0.094"
RING O.D. = PIPE I.D. + 0.375"

PIPE I.D. SHALL BE "C" DIMENSION CALCULATED IN ACCORDANCE WITH P.F.I. STD. ES-21 (1966).

MACHINE INSIDE of CASTINGS AND FORGINGS TO MATCH I.D. of PIPE AS SHOWN.

JOINT DESIGNS RECOMMENDED FOR INERT-GAS TUNGSTEN - ARC WELDING WITH GRINNELL CONSUMABLE SOLID INSERT RINGS

UNITED ENGINEERS & CONSTRUCTORS INC
PHILADELPHIA

CHECKED	INSPECTED	CORRECT CLN	APPROVED JHG
DATE 10-30-57	ESTIMATE	ORIGINATING OFFICE PHILA.	
SCALE FULL	ACCOUNT	5000-LL-1147	
REV. 11-27-64	ITEM		

REVISED 2/12/68	CJB	JHG

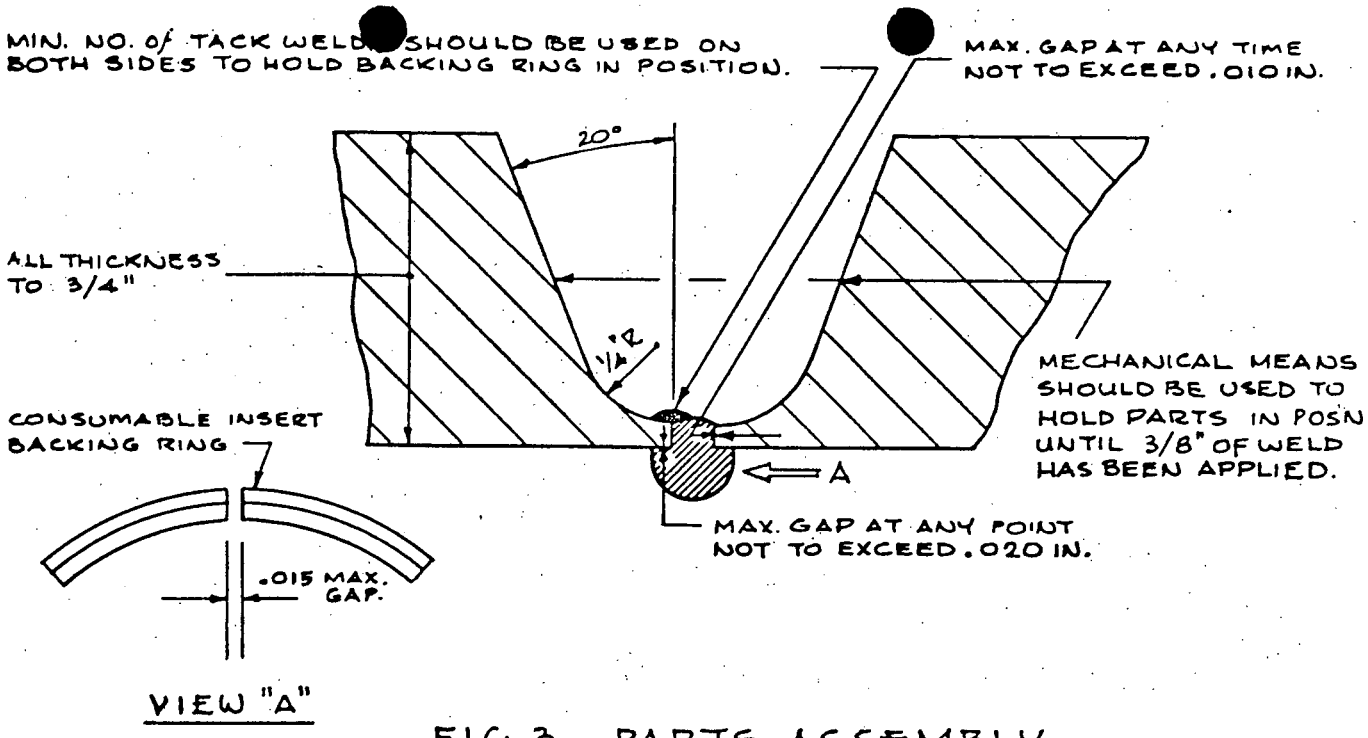

FIG. 3 PARTS ASSEMBLY

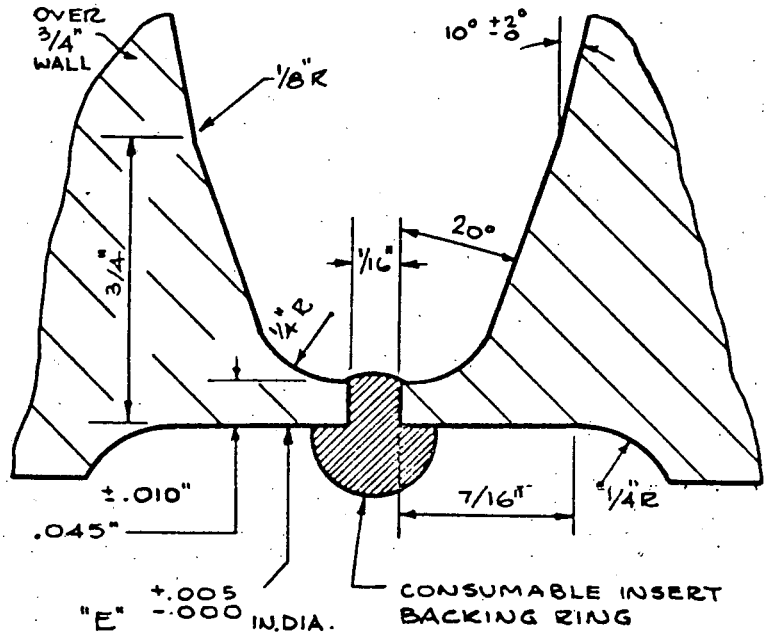

FIG 1 JOINT PREPARATION

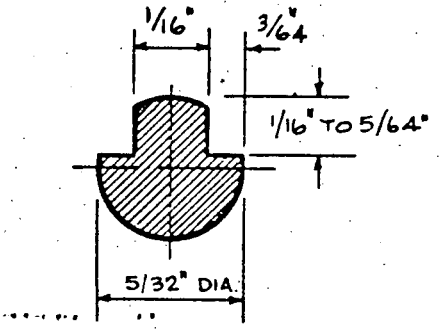

FIG. 2 DIMENSIONS OF CONSUMABLE INSERT BACKING RING

JOINT DESIGNS RECOMMENDED FOR INERT - GAS TUNGSTEN - ARC WELDING WITH THE E-B CONSUMABLE INSERT RINGS

UNITED ENGINEERS & CONSTRUCTORS INC
PHILADELPHIA

CHECKED	INSPECTED	CORRECT	APPROVED
DATE 11/30/64	ESTIMATE	ORIGINATING OFFICE	PHILA
SCALE N.T.S.	ACCOUNT	5000-L-1333	
	ITEM		

Fabrication History

2. Provide the details of the welding process(es) used to make the nozzle-to-pipe, pipe to sparger and piping welds. Include details of welding such as preheat, joint configuration (include with or without backing ring), and post weld treatment, if any.

Response

The configuration of the steam generator feedwater nozzle-to-pipe weld prep details is presented in the attached sketch. The details of the welding process used to make the feedwater piping system welds is contained in the attached weld procedure number 1 and 20. Backing rings were used in lieu of consumable inserts. Post weld treatment was performed as per the procedure on the nozzle-to-pipe.

Fabrication History

3. Provide the NDE performed during and after fabrication of the weld joints requested in question 2.

Response

The non-destructive examinations that were performed during and after fabrication of the nozzle-to-pipe and the pipe welds were a visual inspection of the root pass of the welds, a liquid penetrant examination of the finished welds, and radiographic examination of the finished welds.

Fabrication History

4. Provide the Code edition to which the feedwater piping system was fabricated.

Response

The feedwater piping system was fabricated to the 1965 Edition of the Code including the B31.1.OA Addendum in effect in 1969.

Fabrication History

5. State the fracture toughness requirements, if any, for the feedwater piping system.

Response

There were no fracture toughness requirements for the feedwater piping system.

Preservice/Inservice Inspection and Operating History

1. State whether the feedwater system welds received a preservice inspection in accordance with ASME B&PV Code, Section XI.

Response

The feedwater system welds were not inspected during the preservice inspection performed in accordance with the ASME B&PV Code Section XI.

Preservice/Inservice Inspection and Operating History

2. Provide the extent of inservice inspection performed on the feedwater pipe to steam generator nozzle welds. Include the results of the examinations, any corrective actions taken and causes of any failures.

Response

Indian Point 3 is still in its first 40-month inspection interval under the 1970 edition of the ASME Section XI code. Consequently, there were no provisions for examination of pipe-to-steam generator nozzle welds in the present examination schedule.

Preservice/Inservice Inspection and Operating History

3. Provide the schedule and extent of inservice inspection for the feedwater system for the next inspection interval.

Response

The next refueling outage inservice inspection is scheduled for September 1979. At this time, it is intended to volumetrically examine the feedwater nozzle-to-pipe welds on all four (4) steam generators.

The next forty-month inspection interval will start after the September, 1979 refueling outage. In accordance with 10 CFR §50.55(a), the Authority has updated the IP-3 Inservice Inspection Program to meet the requirements of the 1974 Edition, Summer 1975 addenda of ASME Section XI. In the updated program, the feedwater system welds will be subject to volumetric examination.

Preservice/Inservice Inspection and Operating History

4. Provide any history of water hammer vibration in the feedwater system and design changes and/or actions taken to prevent these occurrences.

Response

Please refer to the response to FSAR Question 10.24 for the information requested.

Preservice/Inservice Inspection and Operating History

5. Provide a description of feedwater chemistry controls and a summary of chemistry data.

Response

Please refer to the Authority's letter to Mr. Eisenhut of April 30, 1979 (IPN-79-31) on the Steam Generator Operating History Questionnaire - Revision 1. Sections IV and V provide information on steam generator blowdown and water chemistry data, respectively.

50-286

UNITED STATES
NUCLEAR REGULATORY COMMISSION
WASHINGTON, D. C. 20555

June 26, 1979

REGULATORY DOCKET FILE COPY

ALL PRESSURIZER WATER REACTORS

Gentlemen:

Recently, because of operator error, an inadvertent reactor scram and safety injection occurred during monthly surveillance tests of the safeguards system at a PWR facility.

At the time of the event, train "A" of the safeguards system had been placed in "test", and the operator, in addition to inserting a high steam flow signal required by the test, inadvertently incorrectly inserted a low steam pressure signal. This action resulted in a low steam pressure signal (signifying a main steam line break) in train "A" which initiated main steam isolation valve (MSIV) isolation and a reactor scram. One MSIV, however, did not close because of a valve solenoid failure. The resultant differential pressure between two steam lines initiated a safety injection signal from train "B". In the ensuing events several more equipment failures occurred. One feedwater regulation valve failed to close because of another solenoid failure. The steam driven auxiliary feedwater pump tripped on overspeed and one of the steam generator atmospheric relief valves failed to fully reseat upon closure.

This occurrence, with its ensuing sequence of events, is of concern to the NRC staff because of the serious questions that are raised due to the multiple equipment failures and whether a very real problem could exist that has not been analyzed. For example, the potential for common mode failures (in this case two apparently independent solenoid valve failures) should be investigated to ensure that a problem does not exist which could negate the criteria assumed in your previous accident analyses or which could lead to an overall reduction in system reliability.

This occurrence is also of concern because of an apparent sense of complacency towards periodic surveillance requirements in general and on engineered safeguards systems in particular which has all too often resulted in inadvertent reactor scrams and safety injection system actuations. From the standpoint of unnecessary challenges to the reactor trip and the safeguards systems and the imposition of unnecessary thermal stress cycles on reactor coolant system and its components, this is undesirable.

KB.
MA4

You and your plant supervisors should review the events described in this letter, to determine whether similar errors have occurred or could occur at your facility and whether the potential exists for a problem associated with occurrences that you have not previously considered. In addition, it is requested that management policies and procedures be reviewed and strengthened as necessary to assure that multiple equipment failures in safety-related systems will be vigorously pursued and analyzed to identify potential failure modes not previously considered that could lead to a significant reduction in the ability of safety systems to function as required. Finally, you are requested to review your engineered safety system surveillance procedures to determine whether appropriate cautions are included and to ensure that plant operators and supervisors are aware of the importance of avoiding challenges to the protective features of your facility.

Within 30 days of receipt of this letter, please submit, in accordance with 10 CFR §50.54(f) of the Commission's regulations, the results of these reviews. In addition to licensing reviews of these matters, we have requested that the NRC's Office of Inspection and Enforcement perform a followup inspection on these matters in the near future.

Sincerely,

Darrell G. Eisenhut

Darrell G. Eisenhut, Acting Director
Division of Operating Reactors
Office of Nuclear Reactor Regulation