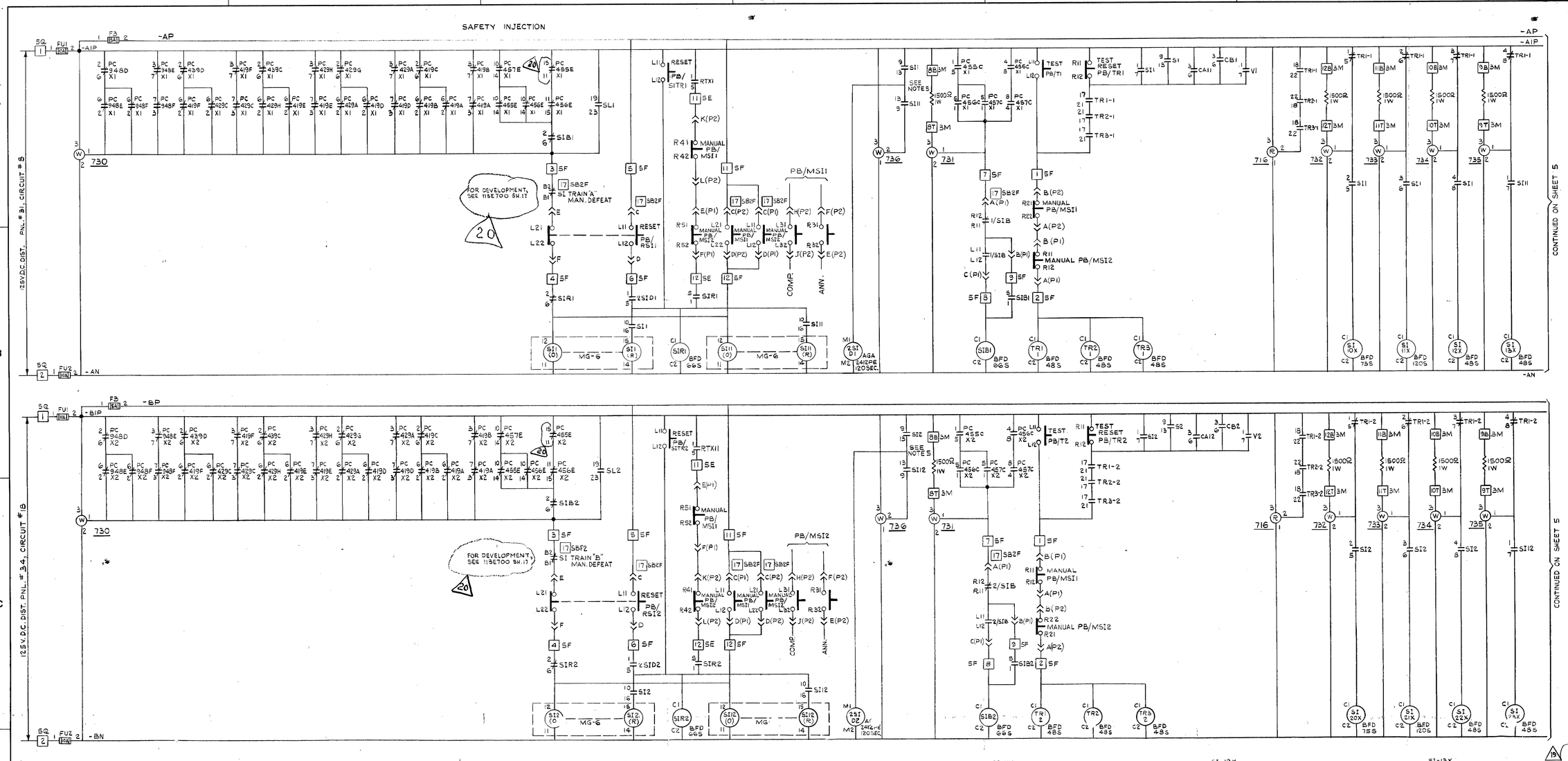

POWER AUTHORITY OF THE STATE OF NEW YORK
INDIAN POINT GENERATING STATION
UNIT NO. 3

CONSOLIDATED EDISON CO.
INDIAN POINT STATION UNIT NO. 3
SAFEGUARDS ACTUATION SCHEMES

REV. NO.	DATE	DESCRIPTION	ENGR.	SUP. ENG.
19	3/15/71	REDRAWN AND REVISED TO INCLUDE MOD. 79-3-053E55, 78-3-10 S15 80-3-007E55, 80-3-15E55, 80-3-040E50, CON ED DWGS E21080, E21080A, E21080B & TO REFLECT FIELD CONDITIONS.	NK	RL

ENGINEER
STATE REG. NO.

113E303-19 SHEET 4 OF 8

8503190090