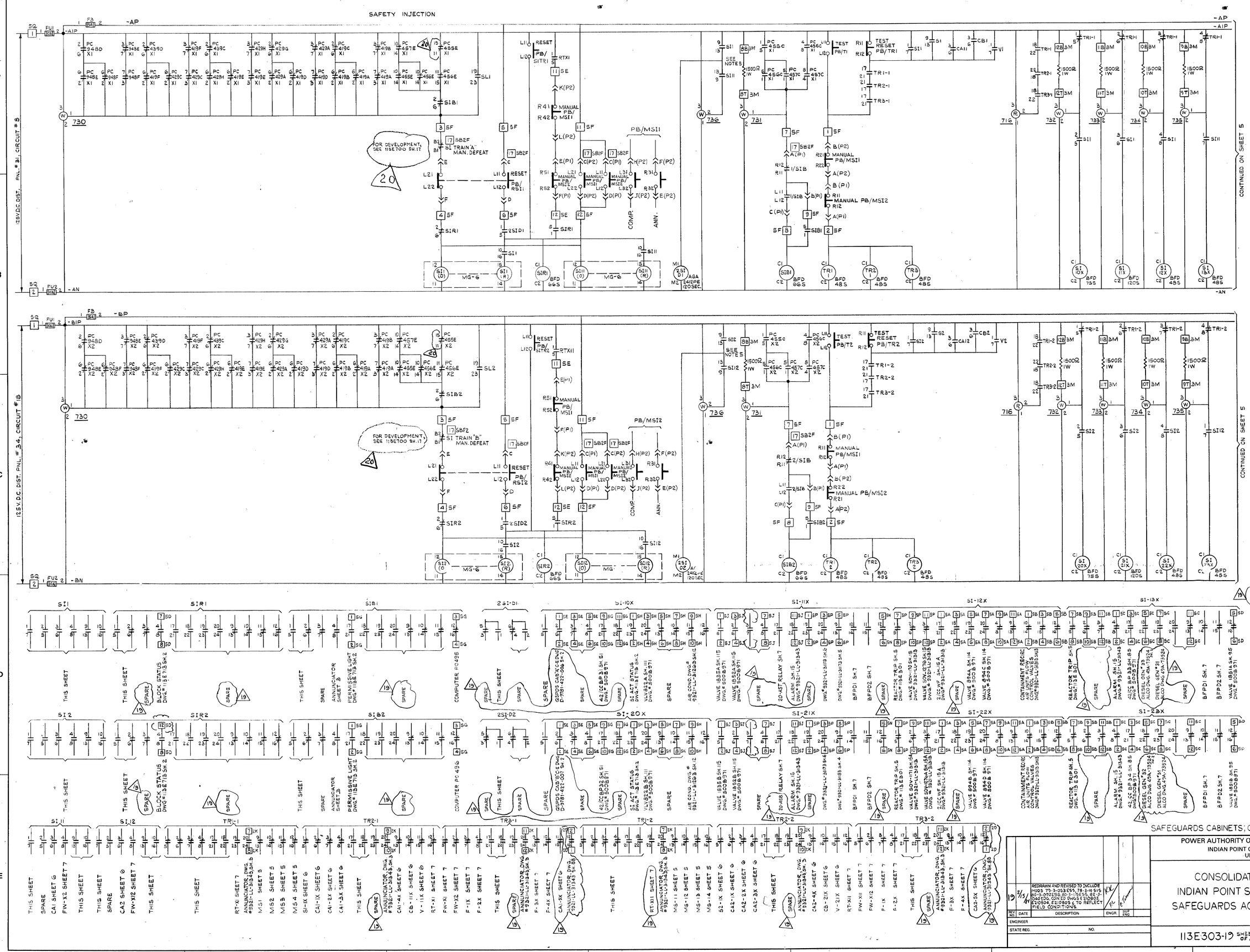

NOTES:

17 SB2F - MAIN CONTROL BOARD

2.

3. SEE SHEET 1 FOR SWITCH DEVELOPMENTS.

4. ALL DIODES ARE STYLE NO. IN4821.

5. CURRENT LIMITING RESISTORS ARE RACK MOUNTED.

TI APERTURE CARD

1972 M 1017

SAFEGUARDS CABINETS; G3, G4, G5 & G6

REV. NO.	DATE	DESCRIPTION	ENGR.	SUP. ENG.
19	2/15/71	REDRAWN AND REVISED TO INCLUDE MOD's 79-3-053ES5, 78-3-10 S15, 80-3-092ESS, 80-3-11ES5, 82-3-040EDG, CONEDO DWGS E20803, E20804, E20805 & TO REFLECT FIELD CONDITIONS.	KK	

ENGINEER

STATE REG. NO.

POWER AUTHORITY OF THE STATE OF NEW YORK
INDIAN POINT GENERATING STATION
UNIT NO. 3

CONSOLIDATED EDISON CO.
INDIAN POINT STATION UNIT NO. 3
SAFEGUARDS ACTUATION SCHEMES

113E303-19 SHEET 4 OF 8

8503190090