Vogtle Electric Generating Plant
Units 1 and 2
Inservice Inspection Plan
Third Inspection Interval
Volume 1

Volume 1 Contents:
Introduction;
NRC caveats for the use of the 2003 Addenda;
Vogtle Alternatives and Relief Requests
NRC Safety Evaluations for Alternatives and Relief Requests; and
Applicable Code Cases.

Version	Date	Description
1.0	May 29, 2007	Initial issue - 2001 Edition of Section XI with Addenda through 2003 is the Code of Record for the ISI Interval starting on May 31, 2007 and ending on May 30, 2017
2.0	March 21, 2008	See attached sheet for Summary of Changes.
3.0	August 10, 2009	See attached sheet for Summary of Changes.

Prepared by Material and Inspection Services

Preparers: Sarah G. LeBlanc / Sarah G. LeBlanc 8/10/09
James M. Agold / James M. Agold Date: 08-07-2009
Print Signature

Reviewer: MICHAEL BELFORD / Michael Belford Date: 8-7-09
Print Signature

Approval: Dennis M. Swann / Dennis M. Swann Date: 8-24-09
Print Signature

Site Approval

ISI Engineer Review: J. J. Churchwell / J J Churchwell Date: 8-27-2009
Print Signature

Programs Group Supervisor: Patrick M Conley / Patrick M Conley Date: 9-2-2009
Print Signature

Technical Services Manager Approval: James C. Robinson / JC Robinson Date: 9-11-09
Print Signature

Authorized Nuclear Inservice Inspector Review

ANII Review: GARY EGGEBRECHT / Gary Eggebrecht Date: 9/11/09
Print Signature

Southern Nuclear Operating Company
40 Inverness Center Parkway
Birmingham, Alabama 35242

205/992-5000

SOUTHERN COMPANY

DATE: August 17, 2009

File: VNP 1-2
Log: MI-09-1271

RE: Vogtle Electric Generating Plant – Unit 1 & 2
Submittal of Inservice Inspection Plan Third Interval Vol. 1

FROM: John G. Aufdenkampe Dennis M. Swann for JGA
Manager, M&IS

TO: James C. Robinson
Vogtle Technical Services Manager

Materials and Inspection Services (M&IS) is submitting the Inservice Inspection Plan Third Inspection Interval Volume 1 (Version 3) for site review and approval. This version updates the Introduction, Code Cases being used at Vogtle and adds ISI alternatives and relief requests VEGP-ISI-ALT-01, VEGP-ISI-ALT-02, VEGP-ISI-RR-01, and the Safety Evaluation for VEGP-ISI-ALT-01. Other changes are noted in the Summary of Changes.

A Vogtle Action Item, Priority 5, (#2009204028) has been opened with a proposed due date of September 18, 2009. This approval copy of this document can be accessed from M&IS web-page under Documents Awaiting Approval, Vogtle.

If you require further assistance, please contact Sarah G. LeBlanc at ext. 5885 or James M. Agold at ext. 5778.

cc: J. M. Agold JMA
L. L. Bartlett
M. Belford
J. J. Churchwell
P. M. Conley
D. R. Cordes
A. Harris
S. G. LeBlanc
E. W. Shaw
D. M. Swann
T. L. Youngblood

CHECKLIST for
VOGTLE ISI PLAN; VOLUME 1; VERSION 3.0

DATE: **August 7, 2009**

TOPICS	ORIGINATOR (S)	REVIEWER (S)
GENERAL REVIEW ITEMS:		
Affected Page Lists; Table of Contents; Spelling; Format; etc. are Correct	JM / SGL	JMA
Copy of Document is Maintained at Corporate during Review Cycle	—	JM
INTRODUCTION/TEXT:		
ASME Code References; Interval Dates, and Text are Correct	SGL / JMA	MB
Other Items (Describe):		
	N/A	N/A
ENCLOSURES:		
The NRC Caveats are addressed properly	SGL / JMA	MB
The Vogtle Alternatives and Relief Requests are addressed correctly	SGL / JMA	MB
The references to the ASME Code Cases are complete and accurate	SGL / JMA	MB
Other Items (Describe):		
	N/A	N/A

MATERIALS AND INSPECTION SERVICES

10 CFR 50.55a EVALUATION

Part I

Title/Rev: Volume 1 of the Vogtle ISI Plan for the Third ISI Interval, Version 3.0

Date: 08/10/2009

Requested By: John Churchwell, ISI Engineer, Vogtle Technical Services

Activity / Plant: Version 2 of the Vogtle ISI Plan (Volume 1) was approved in July 2008. This volume is being updated to address the incorporation of ISI alternatives and relief requests that have been submitted to the NRC. In addition, the update documents the NRC approval of ISI Alternative VEGP-ISI-ALT-01. It documents various sections of the text and enclosures being updated which include an update to ASME Code Cases that are being used at Vogtle during the third ISI Interval.

Part II

NOTE

Technical Revision is one that changes the basis, justification or proposed alternative to the extent that the validity of the NRC Safety Evaluation Report (SER) may be questionable. Editorial changes or changes that do not change the basis for NRC approval of an alternative, relief request, or exemption are not considered *technical revisions.*

1. Does the activity require the preparation of (or technical revision to) a *request for an alternative* to the existing Code requirements as allowed by 10CFR 50.55a(a)(3)? ☐ Yes ☒ No

2. Is the activity a voluntary adoption of a *new ISI Code* edition or Addenda per 10CFR 50.55a(g)(4)(iv)? ☐ Yes ☒ No

3. Is the activity a voluntary adoption of a *new IST Code* edition or Addenda per 10CFR 50.55a(f)(4)(iv)? ☐ Yes ☒ No

If the answer to any question above is "yes" then a change to the ISI or IST program is required, submittal to the NRC is required, and approval from the NRC is required prior to implementation. Provide a basis for the determination and the summary of the changes to the ISI/IST program below.

Basis and Summary of Required Changes:
This is a general update of Volume 1 of the Vogtle ISI Plan. This revision does not require any additional submittals or alternatives to the NRC.

MATERIALS AND INSPECTION SERVICES

10 CFR 50.55a EVALUATION

Part III

1. Does the activity require the preparation of (or technical revision to) a *Relief Request* per 10CFR 50.55a(g)(5) where it has been determined that conformance with Code is impractical? ☐ Yes ☒ No

2. Does the activity require the preparation of (or technical revision to) a *Relief Request* per 10CFR 50.55a(f)(5) where a pump or valve test requirement has been determined to be impractical? ☐ Yes ☒ No

If the answer to any question above is "yes", then the activity is a change to the ISI or IST Program and NRC approval is required within 12 months after the end of the 10-year interval. Provide a basis for the determination and the summary of the changes to the ISI/IST program below.

Basis and Summary of Required Changes:
This is a general update of Volume 1 of the Vogtle ISI Plan. This revision does not require any additional submittals or alternatives to the NRC.

Part IV

Is the activity an exception to the requirements of 10CFR 50.55a that are not addressed in Parts II or III? ☐ Yes ☒ No

If the answer is "yes", then the activity may be an exemption to the rules of 10CFR50.55a and Licensing support should be obtained. A change to the ISI or IST Program and NRC approval is required prior to implementing. Provide a basis for the determination and the summary of the changes to the ISI/IST program below.

Basis and Summary of Required Changes:
This is a general update of Volume 1 of the Vogtle ISI Plan. This revision does not require any additional submittals or alternatives to the NRC.

MATERIALS AND INSPECTION SERVICES

10 CFR 50.55a EVALUATION

Part V

1. Is any other change required to a program developed or updated by M&IS, as a result of this activity (not identified in Parts II, III, or IV)?

   ☐ Yes
   ☒ No

2. If the answer to Question 1 is "Yes", is NRC approval required prior to implementation?

   ☐ Yes
   ☒ No

Provide a basis for the determination and the summary of the changes to the ISI/IST program below.

Basis and Summary of Required Changes:
This is a general update of Volume 1 of the Vogtle ISI Plan. This revision does not require any additional submittals or alternatives to the NRC.

Part VI

PREPARERS:

Sarah G. LeBlanc DATE: 8/10/09

Sarah G. LeBlanc

James M. Agold DATE: 08-07-2009

James M. Agold

REVIEWER: Michael Belford DATE: 8-20-09

Michael Belford

APPROVER: Dennis M. Swann DATE: 8-24-09

Dennis M. Swann

MATERIALS AND INSPECTION SERVICES

10 CFR 50.55a EVALUATION

Part VII (Supplemental Information for M&IS Use)

Does the activity require a change to an inspection Plan ? ☐ Yes ☒ No

Does the activity require a change to a testing Plan? ☐ Yes ☒ No

Summary of Required Changes:
The change to the ISI Plan is being made at this time.

Vogtle Electric Generating Plant
Inservice Inspection (ISI) Plan – Volume 1
Third Ten Year Interval

Revision 3 Summary of Changes

Introduction / Page 1-1, 1-3 through 1-6	The Introduction has been changed to clarify the scope of the ISI Plan, to update Code Cases, "Other Examinations" required for Vogtle, to address ISI examination of weld overlays, and to address the implementation of Risk-Informed ISI of Class 1 and 2 Piping.	To address the latest information.
Enclosure 1 / Page E1-4	The first paragraph under the title Class 1 Piping has been deleted.	This caveat was removed in the latest NRC rulemaking dated September 10, 2008. This volume has been updated to match the latest information.
Enclosure 2	Added ISI Alternatives VEGP-ISI-ALT-01 and VEGP-ISI-ALT-02. Added Relief Request VEGP-ISI-RR-01. Listed the ADAMS ID number (the SER) for ISI-GEN-ALT-07-01, Version 2.0	To address the latest information.
Enclosure 3	Added Safety Evaluation from the NRC for ISI Alternative VEGP-ISI-ALT-01.	To address the latest information.
Enclosure 4	Revised Code Cases N-609, N-663 and N-685 to indicate that Vogtle will use these Code Cases during the third ISI interval. Added Rev. 15 to Code Case N-573.	Code Case N-609 is being used for weld selection prior to the implementation of risk-informed ISI. N-663 is being used to address surface examinations prior to the implementation of risk-informed ISI. N-685 is needed to address lighting requirements for surface examination. Adding Rev. 15 to N-573 was to address an editorial error.

Vogtle Electric Generating Plant
Inservice Inspection (ISI) Plan – Volume 1
Third Ten Year Interval

List of Effective Pages

Page	Revision	Page	Revision
Table of Contents		Page E2-16	Ver 3
Page 1	Ver 2	Page E2-17	Ver 3
		Page E2-18	Ver 3
Introduction		Page E2-19	Ver 3
Page 1	Ver 3	Page E2-20	Ver 3
Page 2	Ver 3	Page E2-21	Ver 3
Page 3	Ver 3	Page E2-22	Ver 3
Page 4	Ver 3	Page E2-23	Ver 3
Page 5	Ver 3	Page E2-24	Ver 3
		Page E2-25	Ver 3
Enclosure 1		Page E2-26	Ver 3
Page E1-1	Ver 2	Page E2-27	Ver 3
Page E1-2	Ver 2	Page E2-28	Ver 3
Page E1-3	Ver 2	Page E2-29	Ver 3
Page E1-4	Ver 3	Page E2-30	Ver 3
Page E1-5	Ver 2	Page E2-31	Ver 3
Page E1-6	Ver 2	Page E2-32	Ver 3
Page E1-7	Ver 2	Page E2-33	Ver 3
Page E1-8	Ver 2	Page E2-34	Ver 3
Page E1-9	Ver 2	Page E2-35	Ver 3
Page E1-10	Ver 2	Page E2-36	Ver 3
Page E1-11	Ver 2	Page E2-37	Ver 3
Page E1-12	Ver 2	Page E2-38	Ver 3
Page E1-13	Ver 2	Page E2-39	Ver 3
		Page E2-40	Ver 3
Enclosure 2		Page E2-41	Ver 3
Page E2-1	Ver 3	Page E2-42	Ver 3
Page E2-2	Ver 3	Page E2-43	Ver 3
Page E2-3	Ver 3	Page E2-44	Ver 3
Page E2-4	Ver 3	Page E2-45	Ver 3
Page E2-5	Ver 3	Page E2-46	Ver 3
Page E2-6	Ver 3	Page E2-47	Ver 3
Page E2-7	Ver 3	Page E2-48	Ver 3
Page E2-8	Ver 3	Page E2-49	Ver 3
Page E2-9	Ver 3	Page E2-50	Ver 3
Page E2-10	Ver 3	Page E2-51	Ver 3
Page E2-11	Ver 3	Page E2-52	Ver 3
Page E2-12	Ver 3	Page E2-53	Ver 3
Page E2-13	Ver 3	Page E2-54	Ver 3
Page E2-14	Ver 3	Page E2-55	Ver 3
Page E2-15	Ver 3	Page E2-56	Ver 3

Page	Revision	Page	Revision
Page E2-57	Ver 3	Page E2-100	Ver 3
Page E2-58	Ver 3	Page E2-101	Ver 3
Page E2-59	Ver 3	Page E2-102	Ver 3
Page E2-60	Ver 3	Page E2-103	Ver 3
Page E2-61	Ver 3	Page E2-104	Ver 3
Page E2-62	Ver 3	Page E2-105	Ver 3
Page E2-63	Ver 3	Page E2-106	Ver 3
Page E2-64	Ver 3	Page E2-107	Ver 3
Page E2-65	Ver 3	Page E2-108	Ver 3
Page E2-66	Ver 3	Page E2-109	Ver 3
Page E2-67	Ver 3	Page E2-110	Ver 3
Page E2-68	Ver 3	Page E2-111	Ver 3
Page E2-69	Ver 3	Page E2-112	Ver 3
Page E2-70	Ver 3	Page E2-113	Ver 3
Page E2-71	Ver 3	Page E2-114	Ver 3
Page E2-72	Ver 3	Page E2-115	Ver 3
Page E2-73	Ver 3	Page E2-116	Ver 3
Page E2-74	Ver 3	Page E2-117	Ver 3
Page E2-75	Ver 3	Page E2-118	Ver 3
Page E2-76	Ver 3	Page E2-119	Ver 3
Page E2-77	Ver 3	Page E2-120	Ver 3
Page E2-78	Ver 3	Page E2-121	Ver 3
Page E2-79	Ver 3	Page E2-122	Ver 3
Page E2-80	Ver 3	Page E2-123	Ver 3
Page E2-81	Ver 3		
Page E2-82	Ver 3	**Enclosure 3**	
Page E2-83	Ver 3	Page E3-1	Ver 2
Page E2-84	Ver 3	Page E3-2	Ver 3
Page E2-85	Ver 3	Page E3-3	Ver 2
Page E2-86	Ver 3	Page E3-4	Ver 2
Page E2-87	Ver 3	Page E3-5	Ver 2
Page E2-88	Ver 3	Page E3-6	Ver 2
Page E2-89	Ver 3	Page E3-7	Ver 2
Page E2-90	Ver 3	Page E3-8	Ver 2
Page E2-91	Ver 3	Page E3-9	Ver 2
Page E2-92	Ver 3	Page E3-10	Ver 2
Page E2-93	Ver 3	Page E3-11	Ver 2
Page E2-94	Ver 3	Page E3-12	Ver 2
Page E2-95	Ver 3	Page E3-13	Ver 2
Page E2-96	Ver 3	Page E3-14	Ver 2
Page E2-97	Ver 3	Page E3-15	Ver 2
Page E2-98	Ver 3	Page E3-16	Ver 3
Page E2-99	Ver 3	Page E3-17	Ver 3

Page	Revision	Page	Revision
Page E3-18	Ver 3		
Page E3-19	Ver 3		
Page E3-20	Ver 3		
Page E3-21	Ver 3		
Page E3-22	Ver 3		
Page E3-23	Ver 3		
Page E3-24	Ver 3		
Enclosure 4			
Page E4-1	Ver 2		
Page E4-2	Ver 2		
Page E4-3	Ver 3		
Page E4-4	Ver 3		
Page E4-5	Ver 3		
Page E4-6	Ver 3		
Page E4-7	Ver 3		
Page E4-8	Ver 3		
Page E4-9	Ver 3		
Page E4-10	Ver 3		
Page E4-11	Ver 3		
Page E4-12	Ver 3		
Page E4-13	Ver 3		
Page E4-14	Ver 3		
Page E4-15	Ver 3		
Page E4-16	Ver 3		
Page E4-17	Ver 3		
Page E4-18	Ver 3		
Page E4-19	Ver 3		
Page E4-20	Ver 3		

Vogtle Electric Generating Plant
Inservice Inspection (ISI) Plan – Volume 1
Third Ten Year Interval

TABLE OF CONTENTS

- Description of the Inservice Inspection Plan
- Code of Record
- ISI Interval Dates
- Classification and Identification of Components
- Alternatives and Relief Requests
- ASME Code Cases
- Other Examinations
- Implementation of Risk-Informed ISI of Class 1 and 2 Piping
- Inservice Examination of Weld Overlays
- Enclosure 1 – NRC Caveats for the Use of the 2003 Addenda
- Enclosure 2 – Alternatives, Relief Requests, and Exceptions to the Rule
- Enclosure 3 – NRC Safety Evaluations
- Enclosure 4 – Code Cases

Vogtle Electric Generating Plant
Third 10-Year Interval
Inservice Inspection Plan

INTRODUCTION

Description of the Inservice Inspection Plan

This document provides a systematic plan for the performance of ISI-related examinations and tests at Vogtle Electric Generating Plant (VEGP) as required by 10CFR 50.55a and the ASME Boiler and Pressure Vessel Code Section XI.

Inspection plans and schedules shall be prepared for subsequent inservice inspection intervals.

A *10-year inspection plan (ISI Plan)* includes:

1. Inspection period and interval dates;
2. the Edition and Addenda of this Division that apply to the required examinations and tests;
3. the classification and identification of the components subject to examination and test;
4. Code Cases proposed for use and the extent of their application;
5. an implementation schedule defining the components subject to examination and the components selected for examination with the examination method, including successive exams from prior periods;
6. the Code requirements by examination category and item number for each component selected for examination and the extent of the examination (percent required).

An *outage plan* includes:

1. Identification of the components selected for examination during the outage;
2. identification of drawings showing components selected for examination during the outage;
3. listing of procedures for those component selected for examination during the outage;
4. description of alternative examinations and identification of components to be examined using alternative methods;
5. identification of calibration blocks used for ultrasonic examination of components.

VOGTLE THIRD INTERVAL ISI PLAN
INTRODUCTION

The third interval ISI Plan for the two Vogtle units has been combined into a single document consisting of six individual volumes as described below. Each volume will be individually controlled and has a separate approval page.

Volume 1 General information applicable to both units including:

Introduction;

NRC caveats for the use of the 2003 Addenda;

Vogtle Alternatives and Relief Requests;

NRC Safety Evaluations for Vogtle Alternatives and Relief Requests; and

Applicable Code Cases.

Volume 2 Class 1, 2, and 3 ISI Examinations related to Vogtle-1, including ISI Basis Document.

Volume 3 Class 1, 2, and 3 Pressure Testing related to Vogtle-1.

Volume 4 Class 1, 2, and 3 ISI Examinations related to Vogtle-2, including ISI Basis Document.

Volume 5 Class 1, 2, and 3 Pressure Testing related to Vogtle-2.

Volume 6 IWE and IWL Containment Testing related to Vogtle-1 and -2.

Volume 7 Class 1, 2, and 3 ISI Figures related to Vogtle-1.

Volume 8 Class 1, 2, and 3 ISI Figures related to Vogtle-2.

Code of Record

Except as modified by the NRC caveats in 10CFR 50.55a (see Enclosure 1), the 2001 Edition of Section XI with Addenda through 2003 is the Code of Record for Vogtle for the ISI interval starting on May 31, 2007 and ending on May 30, 2017.

ISI Interval Dates

The applicable dates for the third ten-year ISI interval are starting on May 31, 2007 and ending on May 30, 2017. The three ISI periods in the third ISI interval are:

First Period	05-31-2007 through 05-30-2010	(3 years);

Second Period	05-31-2010 through 05-30-2014	(4 years); and
Third Period	05-31-2014 through 05-30-2017	(3 years).

Classification and Identification of Components

Since Vogtle was an ASME Section III plant, the classification of the ASME Class 1, 2, and 3 components are listed on the Vogtle P&IDs.

The exemptions described in ASME Section XI Articles IWX-1000 for the 2001 Edition with Addenda through 2003 plus the NRC caveats listed in 10CFR 50.55a were reviewed to finalize the ISI scope. The ISI Basis Document for subsections IWB/C/D/F is included in Volumes 2 and 4. The NRC caveats are shown in Enclosure 1.

The unit specific ISI sketches showing welds and examination areas are included in the ISI Plan, Volume 7 for Vogtle-1 and Volume 8 for Vogtle-2.

Alternatives and Relief Requests

Vogtle will submit either alternatives, per 10 CFR 50.55a (a)(3)(i) or (ii), or relief requests, per 10CFR 50.55a (g)(6)(i), to document alternate examinations or limitations to ASME Section XI. The alternatives and relief requests are shown in Enclosure 2 while the listing of NRC Safety Evaluations are shown in Enclosure 3.

ASME Code Cases

NRC Regulatory Guide 1.147 (R.G. 1.147) "Inservice Inspection Code Case Applicability ASME Section XI Division 1" lists those ASME Section XI Code Cases that are generally acceptable to the NRC staff for implementation. Vogtle started the third ISI interval with Revision 14 approved. On December 19, 2007, the NRC issued a Final Rule (71750) approving Revision 15 of Regulatory Guide 1.147. The effective date for Revision 15 is January 18, 2008. Therefore, Vogtle can use approved Code Cases from either revision of the Regulatory Guide. Enclosure 4 describes the Code Cases that will be used at Vogtle during the third ISI interval.

The NRC issued a Final Rule on Wednesday, September 10, 2008 which approved the 2004 Edition of ASME Section XI. The new rulemaking became effective one month later, October 10, 2008. One section of this rulemaking requires the implementation of ASME Code Cases N-722 "Additional Examinations for PWR Pressure Retaining Welds in Class 1 Components Fabricated with Alloy-600/82/182 Materials" and ASME Code Case N-729-1 "Alternative Examination Requirements for PWR Reactor Vessel Upper Heads with Nozzles having Pressure-Retaining Partial-Penetration Welds" but it provides for the actual implementation to be for any PWR outages that occur after January 1, 2009. Therefore, the requirements of the two Code Cases are not in effect for the Vogtle 2R13 outage in Fall 2008 but are in effect for the Fall 2009 1R15 outage and outages afterward. In addition, this rulemaking requires that once a licensee implements N-729-1, the First Revised NRC Order EA-03-009 no longer applies and shall be deemed to be withdrawn.

Vogtle is also using the following Section IX Code Cases for the application of full structural weld overlays (FSWOLs):

2142-2	F-Number Grouping for Ni-Cr-Fe Filler Metals Section XI
2143-1	F-Number Grouping for Ni-Cr-Fe, Classification UNS W86152 Welding Electrode Section XI

Other Examinations

In addition to the ASME Section XI examinations, Vogtle also performs augmented and owner-elected examinations. The augmented examinations are required and include NRC Orders, Vogtle Technical Specifications, and applicable Materials Reliability Program (MRP) documents. The owner-elected examinations have been evaluated as needed but no regulatory requirements exist.

The augmented examinations include:

NRC Order EA-03-009 related to reactor pressure vessel closure heads (applies only to the following Vogtle outages in the third ISI interval: 1R14 and 2R13).

MRP-139 "Primary System Piping Butt Weld Inspection and Evaluation Guidelines

Code Case N-722 with conditions.
This goes into effect at the first refueling outage after January 1, 2009.

Code Case N-729-1 with conditions.
This goes into effect by December 31, 2008.

Technical Specification 5.5.7 - Reactor Coolant Pump Flywheel Examinations.

Technical Specification 5.5.9 – Steam Generator Tube Inspections.

Technical Specification 5.5.16 - Main Steam and Feedwater Piping Weld Examinations.

Technical Requirement 13.7.2 - Snubber Examinations.

The owner-elected examinations include:

Letter NOE - 01650 (February 26, 1987) - Inservice Inspection of NSCW Spring Hangers.

GPC Action Item Nos. 87-0131 and 87-0931 - Stagnant borated water systems cracking. This action item is being implemented through the risk-informed ISI.

GPC Action Item # 18270 – Examination Techniques and Personnel Qualification for Cold Leg Accumulator Piping (10-inch Sch. 140, ASTM SA-376, Type 316). At this time, these welds are not scheduled for examination under risk-informed ISI since they are not on high safety significant (HSS) segments. However, if they are re-classified as HSS welds, Vogtle will examine these welds to Appendix VIII (PDI) which will also satisfy this action item.

Westinghouse WCAP No. 12907, "Alloy 600 PWSCC Susceptibility Assessment of Vogtle 1 and 2 Primary Components."

The owner-elected examinations include MRP-192, related to thermal fatigue examinations in the RHR System.

The details for these augmented and owner-elected examinations are described in more detail in Volumes 2 and 4 for Vogtle-1 and -2, respectively.

Implementation of Risk-Informed ISI of Class 1 and 2 Piping

Vogtle implemented the Westinghouse methodology for risk-informed ISI (RI-ISI) of piping welds during the second ISI interval for both Vogtle units. An update to the Vogtle RI-ISI program was needed to implement it for the third ISI interval and this work was underway in 2007. However, based on other nuclear sites getting approval for the streamlined EPRI approach using Code Case N-716, SNC made the decision to implement this methodology at Vogtle during the third ISI interval. In April 2009, SNC submitted the RI-ISI program using N-716 per VEGP-ISI-ALT-02 to the NRC. Until the NRC approves this approach, Vogtle will implement the conventional ISI requirements for piping welds and the ISI Plans for both units (Volumes 2 and 4) meet these requirements. Both ISI Plans will be updated once the NRC approves the ISI alternative.

Inservice Examination of Weld Overlays

On March 6, 2007, Southern Nuclear (SNC) submitted a letter (NL-07-0483) to the NRC describing the plans to examine and mitigate the Alloy 82/182 pressurizer butt welds on Farley and Vogtle. This letter included commitments made to the NRC for both plants.

A full structural weld overlay (FSWOL) has been applied to all of the pressurizer Alloy 82/182 nozzle welds at Vogtle-1 and -2 during 1R14 (Spring 2008) and 2R12 (Spring 2007), respectively.

SNC has made commitments (Unit 1: SNC ISI alternative ISI-GEN-ALT-07-01, Version 2.0, and Unit 2: SNC letter NL-07-0803, dated April 13, 2007) to the NRC that subsequent inservice examinations of the pressurizer nozzle FSWOLs will be performed in accordance with Q-4300 of Appendix Q to the 2004 Edition of Section XI with Addenda through 2005.

ENCLOSURE 1

NRC CAVEATS

TO THE USE OF THE 2003

ADDENDA

The NRC adopted the use of the 2003 Addenda to Section XI with numerous caveats. The caveats which are shown in 10 CFR 50.55a have been listed below by subject area.

EXAMINATION OF CONCRETE CONTAINMENTS

Per 50.55a(b)(2)(viii), Licensees applying Subsection IWL, 2001 Edition through the latest edition and addenda incorporated by reference in paragraph (b)(2) of this section (the 2003 Addenda), shall apply paragraphs (b)(2)(viii)(E) through (b)(2)(viii)(G) of this section.

(b)(2)(viii)(E) For Class CC applications, the licensee shall evaluate the acceptability of inaccessible areas when conditions exist in accessible areas that could indicate the presence of or result in degradation to such inaccessible areas. For each inaccessible area identified, the licensee shall provide the following in the ISI Summary Report required by IWA-6000:

- (b)(2)(viii)(E)(*1*) A description of the type and estimated extent of degradation, and the conditions that led to the degradation;
- (b)(2)(viii)(E)(*2*) An evaluation of each area, and the result of the evaluation, and;
- (b)(2)(viii)(E)(*3*) A description of necessary corrective actions.

(b)(2)(viii)(F) Personnel that examine containment concrete surfaces and tendon hardware, wires, or strands must meet the qualification provisions in IWA-2300. The "owner-defined" personnel qualification provisions in IWL-2310(d) are not approved for use.

(b)(2)(viii)(G) Corrosion protection material must be restored following concrete containment post-tensioning system repair and replacement activities in accordance with the quality assurance program requirements specified in IWA-1400.

EXAMINATION OF METAL CONTAINMENTS AND THE LINERS OF CONCRETE CONTAINMENTS.

Per 50.55a(b)(2)(ix), Licensees applying Subsection IWE, 1998 Edition through the latest edition and addenda incorporated by reference in paragraph (b)(2) of this section (2003 Addenda), shall satisfy the requirements of paragraphs (b)(2)(ix)(A), (b)(2)(ix)(B), and (b)(2)(ix)(F) through (b)(2)(ix)(I) of this section.

(b)(2)(ix)(A) For Class MC applications, the licensee shall evaluate the acceptability of inaccessible areas when conditions exist in accessible areas that could indicate the presence of or result in degradation to such inaccessible areas. For each inaccessible area identified, the licensee shall provide the following in the ISI Summary Report as required by IWA-6000:

- (b)(2)(ix)(A)(*1*) A description of the type and estimated extent of degradation, and the conditions that led to the degradation;
- (b)(2)(ix)(A)(*2*) An evaluation of each area, and the result of the evaluation; and
- (b)(2)(ix)(A)(*3*) A description of necessary corrective actions.

(b)(2)(ix)(B) When performing remotely the visual examinations required by Subsection IWE, the maximum direct examination distance specified in Table IWA-2210-1 may be extended and the minimum illumination requirements specified in Table IWA-2210-1 may be decreased provided that the conditions or indications for which the visual examination is performed can be detected at the chosen distance and illumination.

(b)(2)(ix)(F) VT-1 and VT-3 examinations must be conducted in accordance with IWA-2200. Personnel conducting examinations in accordance with the VT-1 or VT-3 examination method shall be qualified in accordance with IWA-2300. The "owner-defined" personnel qualification provisions in IWE-2330(a) for personnel that conduct VT-1 and VT-3 examinations are not approved for use.

(b)(2)(ix)(G) The VT-3 examination method must be used to conduct the examinations in Items E1.12 and E1.20 of Table IWE-2500-1, and the VT-1 examination method must be used to conduct the examination in Item E4.11 of Table IWE-2500-1. An examination of the pressure-retaining bolted connections in Item E1.11 of Table IWE-2500-1 using the VT-3 examination method must be conducted once each interval. The "owner-defined" visual examination provisions in IWE-2310(a) are not approved for use for VT-1 and VT-3 examinations.

(b)(2)(ix)(H) Containment bolted connections that are disassembled during the scheduled performance of the examinations in Item E1.11 of Table IWE-2500-1 must be examined using the VT-3 examination method. Flaws or degradation identified during the performance of a VT-3 examination must be examined in accordance with the VT-1 examination method. The criteria in the material specification or IWB-3517.1 must be used to evaluate containment bolting flaws or degradation. As an alternative to performing VT-3 examinations of containment bolted connections that are disassembled during the scheduled performance of Item E1.11, VT-3 examinations of containment bolted connections may be conducted whenever containment bolted connections are disassembled for any reason.

(b)(2)(ix)(I) The ultrasonic examination acceptance standard specified in IWE-3511.3 for Class MC pressure-retaining components must also be applied to metallic liners of Class CC pressure-retaining components.

QUALITY ASSURANCE

Per 50.55a(b)(2)(x), when applying Section XI editions and addenda later than the 1989 Edition, the requirements of NQA-1, "Quality Assurance Requirements for Nuclear Facilities," 1979 Addenda through the 1989 Edition, are acceptable as permitted by IWA-1400 of Section XI, if the licensee uses its 10 CFR Part 50, Appendix B, quality assurance program, in conjunction with Section XI requirements. Commitments contained in the licensee's quality assurance program description that are more stringent than those contained in NQA-1 must govern Section XI activities. Further, where NQA-1 and Section XI do not address the commitments contained in the licensee's Appendix B quality assurance program description, the commitments must be applied to Section XI activities.

CLASS 1 PIPING

Per 50.55a (g)(4)(iii), Licensees may, but are not required to, perform the surface examinations of High Pressure Safety Injection Systems specified in Table IWB-2500-1, Examination Category B-J, Item Numbers B9.20, B9.21, and B9.22.

UNDERWATER WELDING

Per 50.55a(b)(2)(xii), the provisions in IWA-4660, "Underwater Welding," of Section XI, 1997 Addenda through the latest edition and addenda incorporated by reference in paragraph (b)(2) of this section, are not approved for use on irradiated material.

MECHANICAL CLAMPING DEVICES

Per 50.55a(b)(2)(xiii), Licensees may use the provisions of Code Case N-523-1, "Mechanical Clamping Devices for Class 2 and 3 Piping." Licensee choosing to apply Code Case N-523-1 shall apply all of its provisions.

50.55a(b)(2)(xiii)(A) When implementing Code Case N-513, the specific safety factors in paragraph 4.0 must be satisfied.

50.55a(b)(2)(xiii)(B) Code Case N-513 may not be applied to: components other than pipe and tube, such as pumps, valves, expansion joints, and heat exchangers; leakage through a flange gasket; threaded connections employing nonstructural seal welds for leakage prevention (through seal weld leakage is not a structural flaw, thread integrity must be maintained); and degraded socket welds.

APPENDIX VIII PERSONNEL QUALIFICATION

50.55a(b)(2)(xxiv). The use of Appendix VIII and the supplements to Appendix VIII and Article I-3000 of Section XI of the ASME BPV Code, 2002 Addenda through the latest edition and addenda incorporated by reference in paragraph (b)(2) of this section, is prohibited. (Therefore, the 2001 Edition is used).

50.55a(b)(2)(xiv). All personnel qualified for performing ultrasonic examinations in accordance with Appendix VIII shall receive 8 hours of annual hands-on training on specimens that contain cracks. Licensees applying the 1999 Addenda through the latest edition and addenda incorporated by reference in paragraph (b)(2) of this section (2001 Edition) may use the annual practice requirements in VII-4240 of Appendix VII of Section XI in place of the 8 hours of annual hands-on training provided that the supplemental practice is performed on material or welds that contain cracks, or by analyzing prerecorded data from material or welds that contain cracks. In either case, training must be completed no earlier than 6 months prior to performing ultrasonic examinations at a licensee's facility.

50.55a(b)(2)(xv) *Appendix VIII specimen set and qualification requirements.* The following provisions may be used to modify implementation of Appendix VIII of Section XI, 1995 Edition through the 2001 Edition. Licensees choosing to apply these provisions shall apply all of the following provisions under this paragraph except for those in § 50.55a(b)(2)(xv)(F) which are optional.

50.55a(b)(2)(xv)(A) When applying Supplements 2, 3, and 10 to Appendix VIII, the following examination coverage criteria requirements must be used:

- 50.55a(b)(2)(xv)(A)(1) Piping must be examined in two axial directions, and when examination in the circumferential direction is required, the circumferential examination must be performed in two directions, provided access is available. Dissimilar metal welds must be examined axially and circumferentially.
- 50.55a(b)(2)(xv)(A)(2) Where examination from both sides is not possible, full coverage credit may be claimed from a single side for ferritic welds. Where examination from both sides is not possible on austenitic welds or dissimilar metal welds, full coverage credit from a single side may be claimed only after completing a successful single-sided Appendix VIII demonstration using flaws on the opposite side of the weld. Dissimilar metal weld qualifications must be demonstrated from the austenitic side of the weld and may be used to perform examinations from either side of the weld.

50.55a(b)(2)(xv)(B) The following provisions must be used in addition to the requirements of Supplement 4 to Appendix VIII:

- 50.55a(b)(2)(xv)(B)(*1*) Paragraph 3.1, Detection acceptance criteria--Personnel are qualified for detection if the results of the performance demonstration satisfy

the detection requirements of ASME Section XI, Appendix VIII, Table VIII-S4-1 and no flaw greater than 0.25 inch through wall dimension is missed.

- 50.55a(b)(2)(xv)(B)(*2*) Paragraph 1.1(c), Detection test matrix--Flaws smaller than the 50 percent of allowable flaw size, as defined in IWB-3500, need not be included as detection flaws. For procedures applied from the inside surface, use the minimum thickness specified in the scope of the procedure to calculate a/t. For procedures applied from the outside surface, the actual thickness of the test specimen is to be used to calculate a/t.

50.55a(b)(2)(xv)(C) When applying Supplement 4 to Appendix VIII, the following provisions must be used:

- 50.55a(b)(2)(xv)(C)(*1*) A depth sizing requirement of 0.15 inch RMS must be used in lieu of the requirements in Subparagraphs 3.2(a) and 3.2(c), and a length sizing requirement of 0.75 inch RMS must be used in lieu of the requirement in Subparagraph 3.2(b).
- 50.55a(b)(2)(xv)(C)(*2*) In lieu of the location acceptance criteria requirements of Subparagraph 2.1(b), a flaw will be considered detected when reported within 1.0 inch or 10 percent of the metal path to the flaw, whichever is greater, of its true location in the X and Y directions.
- 50.55a(b)(2)(xv)(C)(*3*) In lieu of the flaw type requirements of Subparagraph 1.1(e)(1), a minimum of 70 percent of the flaws in the detection and sizing tests shall be cracks. Notches, if used, must be limited by the following:
  - 50.55a(b)(2)(xv)(C)(*3*)(*i*) Notches must be limited to the case where examinations are performed from the clad surface.
  - 50.55a(b)(2)(xv)(C)(*3*)(*ii*) Notches must be semielliptical with a tip width of less than or equal to 0.010 inches.
  - 50.55a(b)(2)(xv)(C)(*3*)(*iii*) Notches must be perpendicular to the surface within ± 2 degrees.
  - 50.55a(b)(2)(xv)(C)(*4*) In lieu of the detection test matrix requirements in paragraphs 1.1(e)(2) and 1.1(e)(3), personnel demonstration test sets must contain a representative distribution of flaw orientations, sizes, and locations.

50.55a(b)(2)(xv)(D) The following provisions must be used in addition to the requirements of Supplement 6 to Appendix VIII:

- 50.55a(b)(2)(xv)(D)(*1*) Paragraph 3.1, Detection Acceptance Criteria--Personnel are qualified for detection if:
  - 50.55a(b)(2)(xv)(D)(*1*)(*i*) No surface connected flaw greater than 0.25 inch through wall has been missed.
  - 50.55a(b)(2)(xv)(D)(*1*)(*ii*) No embedded flaw greater than 0.50 inch through wall has been missed.
- 50.55a(b)(2)(xv)(D)(*2*) Paragraph 3.1, Detection Acceptance Criteria--For procedure qualification, all flaws within the scope of the procedure are detected.

- 50.55a(b)(2)(xv)(D)(*3*) Paragraph 1.1(b) for detection and sizing test flaws and locations--Flaws smaller than the 50 percent of allowable flaw size, as defined in IWB-3500, need not be included as detection flaws. Flaws which are less than the allowable flaw size, as defined in IWB-3500, may be used as detection and sizing flaws.
- 50.55a(b)(2)(xv)(D)(*4*) Notches are not permitted.

50.55a(b)(2)(xv)(E) When applying Supplement 6 to Appendix VIII, the following provisions must be used:

- 50.55a(b)(2)(xv)(E)(*1*) A depth sizing requirement of 0.25 inch RMS must be used in lieu of the requirements of subparagraphs 3.2(a), 3.2(c)(2), and 3.2(c)(3).
- 50.55a(b)(2)(xv)(E)(*2*) In lieu of the location acceptance criteria requirements in Subparagraph 2.1(b), a flaw will be considered detected when reported within 1.0 inch or 10 percent of the metal path to the flaw, whichever is greater, of its true location in the X and Y directions.
- 50.55a(b)(2)(xv)(E)(*3*) In lieu of the length sizing criteria requirements of Subparagraph 3.2(b), a length sizing acceptance criteria of 0.75 inch RMS must be used.
- 50.55a(b)(2)(xv)(E)(*4*) In lieu of the detection specimen requirements in Subparagraph 1.1(e)(1), a minimum of 55 percent of the flaws must be cracks. The remaining flaws may be cracks or fabrication type flaws, such as slag and lack of fusion. The use of notches is not allowed.
- 50.55a(b)(2)(xv)(E)(*5*) In lieu of paragraphs 1.1(e)(2) and 1.1(e)(3) detection test matrix, personnel demonstration test sets must contain a representative distribution of flaw orientations, sizes, and locations.

50.55a(b)(2)(xv)(F) The following provisions may be used for personnel qualification for combined Supplement 4 to Appendix VIII and Supplement 6 to Appendix VIII qualification. Licensees choosing to apply this combined qualification shall apply all of the provisions of Supplements 4 and 6 including the following provisions:

- 50.55a(b)(2)(xv)(F)(*1*) For detection and sizing, the total number of flaws must be at least 10. A minimum of 5 flaws shall be from Supplement 4, and a minimum of 50 percent of the flaws must be from Supplement 6. At least 50 percent of the flaws in any sizing must be cracks. Notches are not acceptable for Supplement 6.
- 50.55a(b)(2)(xv)(F)(*2*) Examination personnel are qualified for detection and length sizing when the results of any combined performance demonstration satisfy the acceptance criteria of Supplement 4 to Appendix VIII.
- 50.55a(b)(2)(xv)(F)(*3*) Examination personnel are qualified for depth sizing when Supplement 4 to Appendix VIII and Supplement 6 to Appendix VIII flaws are sized within the respective acceptance criteria of those supplements.

50.55a(b)(2)(xv)(G) When applying Supplement 4 to Appendix VIII, Supplement 6 to Appendix VIII, or combined Supplement 4 and Supplement 6 qualification, the following additional provisions must be used, and examination coverage must include:

- 50.55a(b)(2)(xv)(G)(*1*) The clad to base metal interface, including a minimum of 15 percent T (measured from the clad to base metal interface), shall be examined from four orthogonal directions using procedures and personnel qualified in accordance with Supplement 4 to Appendix VIII.
- 50.55a(b)(2)(xv)(G)(*2*) If the clad-to-base-metal-interface procedure demonstrates detectability of flaws with a tilt angle relative to the weld centerline of at least 45 degrees, the remainder of the examination volume is considered fully examined if coverage is obtained in one parallel and one perpendicular direction. This must be accomplished using a procedure and personnel qualified for single-side examination in accordance with Supplement 6. Subsequent examinations of this volume may be performed using examination techniques qualified for a tilt angle of at least 10 degrees.
- 50.55a(b)(2)(xv)(G)(*3*) The examination volume not addressed by § 50.55a(b)(2)(xv)(G)(*1*) is considered fully examined if coverage is obtained in one parallel and one perpendicular direction, using a procedure and personnel qualified for single sided examination when the provisions of § 50.55a(b)(2)(xv)(G)(*2*) are met.

50.55a(b)(2)(xv)(H) When applying Supplement 5 to Appendix VIII, at least 50 percent of the flaws in the demonstration test set must be cracks and the maximum misorientation shall be demonstrated with cracks. Flaws in nozzles with bore diameters equal to or less than 4 inches may be notches.

50.55a(b)(2)(xv)(I) When applying Supplement 5, Paragraph (a), to Appendix VIII, the following provision must be used in calculating the number of permissible false calls: 50.55a(b)(2)(xv)(I)(*1*) The number of false calls allowed must be D/10, with a maximum of 3, where D is the diameter of the nozzle.

50.55a(b)(2)(xv)(J) [Reserved]

50.55a(b)(2)(xv)(K) When performing nozzle-to-vessel weld examinations, the following provisions must be used when the requirements contained in Supplement 7 to Appendix VIII are applied for nozzle-to-vessel welds in conjunction with Supplement 4 to Appendix VIII, Supplement 6 to Appendix VIII, or combined Supplement 4 and Supplement 6 qualification.

- 50.55a(b)(2)(xv)(K)(*1*) For examination of nozzle-to-vessel welds conducted from the bore, the following provisions are required to qualify the procedures, equipment, and personnel:
  - 50.55a(b)(2)(xv)(K)(*1*)(*i*) For detection, a minimum of four flaws in one or more full-scale nozzle mock-ups must be added to the test set. The specimens must comply with Supplement 6, paragraph 1.1, to Appendix

VIII, except for flaw locations specified in Table VIII S6-1. Flaws may be either notches, fabrication flaws or cracks. Seventy-five (75) percent of the flaws must be cracks or fabrication flaws. Flaw locations and orientations must be selected from the choices shown in paragraph (b)(2)(xv)(K)(*4*) of this section, Table VIII-S7-1--Modified, with the exception that flaws in the outer eighty-five (85) percent of the weld need not be perpendicular to the weld. There may be no more than two flaws from each category, and at least one subsurface flaw must be included.

- 50.55a(b)(2)(xv)(K)(*1*)(*ii*) For length sizing, a minimum of four flaws as in § 50.55a(b)(2)(xv)(K)(*1*)(*i*) must be included in the test set. The length sizing results must be added to the results of combined Supplement 4 to Appendix VIII and Supplement 6 to Appendix VIII. The combined results must meet the acceptance standards contained in § 50.55a(b)(2)(xv)(E)(*3*).
- 50.55a(b)(2)(xv)(K)(*1*)(*iii*) For depth sizing, a minimum of four flaws as in § 50.55a(b)(2)(xv)(K)(*1*)(*i*) must be included in the test set. Their depths must be distributed over the ranges of Supplement 4, Paragraph 1.1, to Appendix VIII, for the inner 15 percent of the wall thickness and Supplement 6, Paragraph 1.1, to Appendix VIII, for the remainder of the wall thickness. The depth sizing results must be combined with the sizing results from Supplement 4 to Appendix VIII for the inner 15 percent and to Supplement 6 to Appendix VIII for the remainder of the wall thickness. The combined results must meet the depth sizing acceptance criteria contained in §§ 50.55a(b)(2)(xv)(C)(*1*), 50.55a(b)(2)(xv)(E)(*1*), and 50.55a(b)(2)(xv)(F)(*3*).

- 50.55a(b)(2)(xv)(K)(*2*) For examination of reactor pressure vessel nozzle-to-vessel welds conducted from the inside of the vessel,
  - 50.55a(b)(2)(xv)(K)(*2*)(*i*) The clad to base metal interface and the adjacent examination volume to a minimum depth of 15 percent T (measured from the clad to base metal interface) must be examined from four orthogonal directions using a procedure and personnel qualified in accordance with Supplement 4 to Appendix VIII as modified by §§ 50.55a(b)(2)(xv)(B) and 50.55a(b)(2)(xv)(C).
  - 50.55a(b)(2)(xv)(K)(*2*)(*ii*) When the examination volume defined in § 50.55a(b)(2)(xv)(K)(*2*)(*i*) cannot be effectively examined in all four directions, the examination must be augmented by examination from the nozzle bore using a procedure and personnel qualified in accordance with 50.55a(b)(2)(xv)(K)(*1*).
  - 50.55a(b)(2)(xv)(K)(*2*)(*iii*) The remainder of the examination volume not covered by 50.55a(b)(*2*)(xv)(K)(*2*)(*ii*) or a combination of 50.55a(b)(2)(xv)(K)(*2*)(i) and § 50.55a(b)(2)(xv)(K)(*2*)(*ii*), must be examined from the nozzle bore using a procedure and personnel qualified in accordance with § 50.55a(b)(2)(xv)(K)(*1*), or from the vessel shell using a procedure and personnel qualified for single sided examination in accordance with Supplement 6 to Appendix VIII, as modified by

50.55a(b)(2)(xv)(D), 50.55a(b)(2)(xv)(E), 50.55a(b)(2)(xv)(F), and 50.55a(b)(2)(xv)(G).

- 50.55a(b)(2)(xv)(K)(*3*) For examination of reactor pressure vessel nozzle-to-shell welds conducted from the outside of the vessel,
  - 50.55a(b)(2)(xv)(K)(*3*)(*i*) The clad to base metal interface and the adjacent metal to a depth of 15 percent T, (measured from the clad to base metal interface) must be examined from one radial and two opposing circumferential directions using a procedure and personnel qualified in accordance with Supplement 4 to Appendix VIII, as modified by §§ 50.55a(b)(2)(xv)(B) and 50.55a(b)(2)(xv)(C), for examinations performed in the radial direction, and Supplement 5 to Appendix VIII, as modified by § 50.55a(b)(2)(xv)(J), for examinations performed in the circumferential direction.
  - 50.55a(b)(2)(xv)(K)(*3*)(*ii*) The examination volume not addressed by § 50.55a(b)(2)(xv)(K)(*3*)(*i*) must be examined in a minimum of one radial direction using a procedure and personnel qualified for single sided examination in accordance with Supplement 6 to Appendix VIII, as modified by §§ 50.55a(b)(2)(xv)(D), 50.55a(b)(2)(xv)(E), 50.55a(b)(2)(xv)(F), and 50.55a(b)(2)(xv)(G).
- 50.55a(b)(2)(xv)(K)(*4*) Table VIII-S7-1, "Flaw Locations and Orientations," Supplement 7 to Appendix VIII, is modified as follows:

Table VIII-S7-1--Modified

Flaw Locations and Orientations		
	Parallel to weld	**Perpendicular to weld**
Inner 15 percent	X	X
OD Surface	X	.....
Subsurface	X	.....

50.55a(b)(2)(xv)(L) As a modification to the requirements of Supplement 8, Subparagraph 1.1(c), to Appendix VIII, notches may be located within one diameter of each end of the bolt or stud.

50.55a(b)(2)(xv)(M) When implementing Supplement 12 to Appendix VIII, only the provisions related to the coordinated implementation of Supplement 3 to Supplement 2 performance demonstrations are to be applied.

50.55a(b)(2)(xvi) *Appendix VIII single side ferritic vessel and piping and stainless steel piping examination.*

50.55a(b)(2)(xvi)(A) Examinations performed from one side of a ferritic vessel weld must be conducted with equipment, procedures, and personnel that have demonstrated proficiency with single side examinations. To demonstrate equivalency

to two sided examinations, the demonstration must be performed to the requirements of Appendix VIII as modified by this paragraph and §§ 50.55a(b)(2)(xv) (B) through (G), on specimens containing flaws with non-optimum sound energy reflecting characteristics or flaws similar to those in the vessel being examined.

50.55a(b)(2)(xvi)(B) Examinations performed from one side of a ferritic or stainless steel pipe weld must be conducted with equipment, procedures, and personnel that have demonstrated proficiency with single side examinations. To demonstrate equivalency to two sided examinations, the demonstration must be performed to the requirements of Appendix VIII as modified by this paragraph and § 50.55a(b)(2)(xv)(A).

CERTIFICATION OF NDE PERSONNEL.

50.55a(b)(2)(xviii)(A) Level I and II nondestructive examination personnel shall be recertified on a 3-year interval in lieu of the 5-year interval specified in the 1997 Addenda and 1998 Edition of IWA-2314, and IWA-2314(a) and IWA-2314(b) of the 1999 Addenda through the latest edition and addenda incorporated by reference in paragraph (b)(2) of this section.

50.55a(b)(2)(xviii)(B) Paragraph IWA-2316 of the 1998 Edition through the latest edition and addenda incorporated by reference in paragraph (b)(2) of this section (2003 Addenda), may only be used to qualify personnel that observe for leakage during system leakage and hydrostatic tests conducted in accordance with IWA-5211(a) and (b), 1998 Edition through the latest edition and addenda incorporated by reference in paragraph (b)(2) of this section.

50.55a(b)(2)(xviii)(C) When qualifying visual examination personnel for VT-3 visual examinations under paragraph IWA-2317 of the 1998 Edition through the latest edition and addenda incorporated by reference in paragraph (b)(2) of this section (2003 Addenda), the proficiency of the training must be demonstrated by administering an initial qualification examination and administering subsequent examinations on a 3-year interval.

SUBSTITUTION OF ALTERNATIVE METHODS

Per 50.55a(b)(2)(xix), the provisions for the substitution of alternative examination methods, a combination of methods, or newly developed techniques in the 1997 Addenda of IWA-2240 must be applied. The provisions in IWA-2240, 1998 Edition through the latest edition and addenda incorporated by reference in paragraph (b)(2) of this section, are not approved for use. The provisions in IWA-4520(c), 1997 Addenda through the latest edition and addenda incorporated by reference in paragraph (b)(2) of this section, allowing the substitution of alternative examination methods, a combination of methods, or newly developed techniques for the methods specified in the Construction Code are not approved for use.

SYSTEM LEAKAGE TESTS.

Per 50.55a(b)(2)(xx), when performing system leakage tests in accordance IWA-5213(a), 1997 through 2002 Addenda, a 10-minute hold time after attaining test pressure is required for Class 2 and Class 3 components that are not in use during normal operating conditions, and no hold time is required for the remaining Class 2 and Class 3 components provided that the system has been in operation for at least 4 hours for insulated components or 10 minutes for uninsulated components.

TABLE IWB-2500-1 EXAMINATION REQUIREMENTS.

Per 50.55a(b)(2)(xxi)(A), the provisions of Table IWB-2500-1, Examination Category B-D, Full Penetration Welded Nozzles in Vessels, Items B3.40 and B3.60 (Inspection Program A) and Items B3.120 and B3.140 (Inspection Program B) in the 1998 Edition must be applied when using the 1999 Addenda through the latest edition and addenda incorporated by reference in paragraph (b)(2) of this section. A visual examination with enhanced magnification that has a resolution sensitivity to detect a 1-mil width wire or crack, utilizing the allowable flaw length criteria in Table IWB-3512-1, 1997 Addenda through the latest edition and addenda incorporated by reference in paragraph (b)(2) of this section, may be performed in place of an ultrasonic examination.

50.55a(b)(2)(xxi)(B) The provisions of Table IWB-2500-1, Examination Category B-G-2, Item B7.80, that are in the 1995 Edition are applicable only to reused bolting when using the 1997 Addenda through the latest edition and addenda incorporated by reference in paragraph (b)(2) of this section.

SURFACE EXAMINATION

Per 50.55a(b)(2)(xxii), the use of the provision in IWA-2220, "Surface Examination," of Section XI, 2001 Edition through the latest edition and addenda incorporated by reference in paragraph (b)(2) of this section, that allow use of an ultrasonic examination method is prohibited.

EVALUATION OF THERMALLY CUT SURFACES

Per 50.55a(b)(2)(xxiii), the use of the provisions for eliminating mechanical processing of thermally cut surfaces in IWA-4461.4.2 of Section XI, 2001 Edition through the latest edition and addenda incorporated by reference in paragraph (b)(2) of this section are prohibited.

MITIGATION OF DEFECTS BY MODIFICATION

Per 50.55a(b)(2)(xxv), the use of the provisions in IWA-4340, "Mitigation of Defects by Modification," Section XI, 2001 Edition through the latest edition and addenda incorporated by reference in paragraph (b)(2) of this section are prohibited.

PRESSURE TESTING CLASS 1, 2, AND 3 MECHANICAL JOINTS

Per 50.55a(b)(2)(xxvi), the repair and replacement activity provisions in IWA-4540(c) of the 1998 Edition of Section XI for pressure testing Class 1, 2, and 3 mechanical joints must be applied when using the 2001 Edition through the latest edition and addenda incorporated by reference in paragraph (b)(2) of this section.

REMOVAL OF INSULATION

Per 50.55a(b)(2)(xxvii), *w*hen performing visual examinations in accordance with IWA-5242 of Section XI, 2003 Addenda through the latest edition and addenda incorporated by reference in paragraph (b)(2) of the section, insulation must be removed from 17-4 PH or 410 stainless steel studs or bolts aged at a temperature below 1100 °F or having a Rockwell Method C hardness value above 30, and from A-286 stainless steel studs or bolts preloaded to 100,000 pounds per square inch or higher.

SNUBBERS

Per 50.55a(b)(3), as used in this section, references to the OM Code refer to the ASME Code for Operation and Maintenance of Nuclear Power Plants, and include the 1995 Edition through the 2003 Addenda subject to the following limitations and modifications:

50.55a(b)(3)(v) *Subsection ISTD.* Article IWF-5000, "Inservice Inspection Requirements for Snubbers," of the ASME BPV Code, Section XI, provides inservice inspection requirements for examinations and tests of snubbers at nuclear power plants. Licensees may use Subsection ISTD, "Inservice Testing of Dynamic Restraints (Snubbers) in Light-Water Reactor Power Plants," ASME OM Code, 1995 Edition through the latest edition and addenda incorporated by reference in paragraph (b)(3) of this section, in place of the requirements for snubbers in Section XI, IWF-5200(a) and (b) and IWF-5300(a) and (b), by making appropriate changes to their technical specifications or licensee-controlled documents. Preservice and inservice examinations must be performed using the VT-3 visual examination method described in IWA-2213.

ENCLOSURE 2

VOGTLE ALTERNATIVES

AND

RELIEF REQUESTS

LISTING OF RELIEF REQUESTS, ALTERNATIVES, AND EXEMPTIONS

Number	Date Letter No.	Description	Date Approved	Page
ISI-GEN-ALT-07-01, Version 2.0	12/26/07 NL-07-2206	Application of Pressurizer Nozzle Full-Structural Weld Overlays	3/10/2008	E2-3 thru E2-39
VEGP-ISI-ALT-01, Version 1.0	04/23/09 NL-009-0585	Class 1 pressure retaining welds in piping, subject to ASME Section XI, Appendix VIII, Supplement 11, examination (weld overlay examinations).	7/6/2009	E2-40 thru E2-52
VEGP-ISI-ALT-02, Version 1.0	04/15/09 NL-09-0332	Request for Approval of Risk-Informed/Safety Based Inservice Inspection Alternative for Class 1 And 2 Piping	With NRC	E2-53 thru E2-121
VEGP-ISI-RR-01, Version 2.0	04/23/09 NL-09-0586	VEGP-2 tendon strands.	With NRC	E2-122 thru E2-123

SOUTHERN NUCLEAR OPERATING COMPANY
ISI-GEN-ALT-07-01, VERSION 2.0
PROPOSED ALTERNATIVE IN ACCORDANCE WITH 10 CFR 50.55a(a)(3)(i)
APPLICATION OF PRESSURIZER NOZZLE FULL-STRUCTURAL WELD OVERLAYS

This proposed alternative meets the technical requirements previously set forth in the April 3, 2007, NRC safety evaluation for alternative ISI-GEN-ALT-06-03, Revision 2.0 (as supplemented by letter dated March 15, 2007) with the single exception that the start of the 48-hour clock prior to performing examinations has been revised. This change to the start of the 48-hour clock has previously been approved by the NRC for Arkansas Nuclear One-Unit 1; therefore, this proposed alternative does not contain any technical content that has not already been approved by the NRC.

NOTE

Unless identified otherwise, each reference to ISI-GEN-ALT-06-03 pertains to Revision 2.0, as supplemented by letter dated March 15, 2007.

Plant Site-Unit: Vogtle Electric Generating Plant (VEGP) Unit 1 and Joseph M. Farley Nuclear Plant (FNP) Unit 2.

Interval Dates: VEGP-1 Third ISI Interval from May 31, 2007, through May 30, 2017.

FNP-2 Fourth ISI Interval from December 1, 2007 through November 30, 2017.

NOTE

Southern Nuclear Operating Company (SNC) has requested (by letter NL-07-1612, dated October 8, 2007) approval to revise the FNP-2 ISI program ISI Interval dates to match those for FNP-1. Dates shown above reflect the change.

Requested Date for Approval : To facilitate the NRC's approval of this proposed alternative, SNC made the determination to not submit technical material in this alternative that was not previously approved by the NRC for SNC or for another utility. Expedited approval is requested by October 7, 2007, in order to support the design and documentation requirements for the VEGP-1 outage that is scheduled to begin in March 2008.

Preemptive Overlays

A preemptive full-structural weld overlay (FSWOL) will be applied to each of the VEGP-1 and FNP-2 pressurizer dissimilar metal (DSM) welds as described below.

1. VEGP-2 installed preemptive FSWOLs during the Spring 2007 refueling outage per ISI-GEN-ALT-06-03. (For Information Only).

2. FNP-1 installed preemptive FSWOLs during the Fall 2007 refueling outage per ISI-GEN-ALT-06-03. (For Information Only).

3. VEGP-1 is scheduled to have preemptive full-structural weld overlays (FSWOLs) applied during the Spring 2008 refueling outage. Ultrasonic examinations of the similar or dissimilar metal welds are not currently planned prior to the installation of the preemptive FSWOLs.

4. Ultrasonic examinations were performed on each of the FNP-2 dissimilar metal butt welds during the Spring 2007 refueling outage. As a result of ultrasonic indications detected in the

surge nozzle dissimilar metal weld, the weld was overlaid per ISI-GEN-ALT-06-03. FNP-2 is scheduled for preemptive FSWOLs of the remaining welds during the Spring 2010 refueling outage. Additional ultrasonic examinations of the similar or dissimilar metal welds are not currently planned prior to the installation of the preemptive FSWOLs.

Contingency Overlay Repairs

For this alternative, contingency weld overlays apply only to VEGP-1 and FNP-2 because VEGP-2 and FNP-1 welds are overlaid. If a through-wall flaw in any of the FNP or VEGP dissimilar metal welds is visually observed, the leak will be attributed to Pressurized Water Stress Corrosion Cracking (PWSCC) and an FSWOL will be applied. No ultrasonic examinations are planned prior to applying the contingency overlay repair and only the nozzle with the leak will be repaired.

ASME Code Components Affected:

The following (Risk-Informed) Category R-A VEGP-1 and FNP-2 pressurizer dissimilar metal welds are to be overlaid.

VEGP-1	FNP-2
11201-V6-002-W17 (Relief)	APR1-4205-49DM (Spray)
11201-V6-002-W18 (Safety)	APR1-4501-1DM (Safety)
11201-V6-002-W19 (Safety)	APR1-4502-1DM (Safety)
11201-V6-002-W20 (Safety)	APR1-4503-1DM (Safety)
11201-V6-002-W21 (Spray)	APR1-4504-1DM (Relief)
11201-V6-002-W22 (Surge)	

The following (Risk-Informed) Category R-A VEGP-1 and FNP-2 pressurizer similar metal welds are subject to being overlaid in conjunction with the dissimilar metal weld.

VEGP-1	FNP-2
11201-030-45 (Spray)	APR1-4205-48 (Spray)
11201-053-6 (Surge)	APR1-4501-2 (Safety)
11201-056-1 (Safety)	APR1-4502-2 (Safety)
11201-057-1 (Safety)	APR1-4503-2 (Safety)
11201-058-1 (Safety)	APR1-4504-2&3 (Relief)
11201-059-1 (Relief)	

Applicable Code Edition and Addenda:

The applicable Code edition and addenda is ASME Section XI, "Rules for Inservice Inspection of Nuclear Power Plant Components," 2001 Edition with Addenda through 2003. The exception is that for ASME Section XI, Appendix VIII, the 2001 Edition of Section XI will be used. This exception is based on 10 CFR 50.55a(b)(2)(xxiv) which states, "The use of Appendix VIII and the supplements to Appendix VIII and Article I-3000 of Section XI of the ASME BPV Code, 2002 Addenda through the latest edition and addenda incorporated by reference in paragraph (b)(2) of this section, is prohibited."

NOTE

Unless identified otherwise, all Code references provided herein are

to ASME Section XI.

Applicable Code Requirements:

IWA-4110 of ASME Section XI requires that repairs of welds shall be performed in accordance with Article IWA-4000. IWA-4300 requires that defects be removed or reduced to an acceptable size.

Currently, pressurizer weld examinations are performed at VEGP and FNP using a Risk-Informed Program (Category R-A). The examinations performed are the same as those volumetric examinations specified in Section XI, Table IWB-2500-1, Category B-J and B-F. After the installation of the weld overlays these similar and dissimilar metal welds will no longer be included in the Risk-Informed ISI population, but will be examined in accordance with this proposed alternative.

Reason for Request:

Section XI of the American Society of Mechanical Engineers, Boiler and Pressure Vessel Code (Section XI Code) does not provide rules for the design of weld overlays or for repairs without removal of flaws. Code Case N-504-2, which has been approved by the NRC for use, does not provide the methodology for overlaying nickel alloy welds joining austenitic and ferritic base materials. As a result, by letter dated August 10, 2006, as supplemented by letters dated October 20, 2006, January 3, 2007, and February 21, 2007, SNC submitted a proposed alternative to the requirements of the Section XI Code. SNC proposed to use a full-structural weld overlay to mitigate or repair dissimilar metal welds on a contingency and preemptive basis and to overlay adjacent similar metal welds when necessary. ISI-GEN-ALT-06-03, Revision 2 was authorized by NRC letter dated March 8, 2007. Subsequently, by letter dated March 15, 2007, SNC requested relief from the requirements of the approved alternative to change the frequency of interpass temperature measurements required by paragraph 3(e) of Appendix 1. The alternate frequency for interpass temperature monitoring was authorized by NRC letter dated April 3, 2007. Reference TAC Numbers MD2794, MD2795, MD2796 and MD2797. This approved alternative has expired; therefore, it is necessary to develop a new alternative to complete the weld overlay campaigns.

Proposed Alternative and Basis for Use:

Proposed Alternative

ISI-GEN-ALT-06-03 was used to develop this proposed alternative in conjunction with the below listed requirements from the April 3, 2007 safety evaluation. Note: the below listed requirements were never added to ISI-GEN-ALT-06-03.

1. Section 2(b)4i incorporates the requirement that the stress evaluation be submitted to the NRC prior to entering Mode 4.

2. Section 3, Post-Overlay Examinations, incorporates the requirement that the examination results, along with a discussion of any repairs, be provided to the NRC within 14 days after the completion of the ultrasonic examinations.

3. Section 3(c) incorporates the requirement that inservice examinations of the FSWOLs be performed in accordance with Q-4300 of Appendix Q.
4. Section 3.0(e)(i) of Appendix 1 incorporates the SNC letter dated March 15, 2007 to re-define the frequency of interbead temperature measurements.

Non-technical changes were subsequently made to various sections to update the alternative to

the current status. Sections 3(a)2 and 3a(3) of the alternative, plus section 3.0(a) of Appendix IV to the alternative were then changed to revise the 48-hour hold time requirements. The revised 48-hour hold time requirements were previously authorized for Arkansas Nuclear One, Unit 1 by the NRC in the April 6, 2007, safety evaluation Reference TAC Number MD4019. See Appendix 7 for the technical justification.

Alternative

A scheduled preemptive FSWOL will be applied to each of the FNP-2 and VEGP-1 pressurizer Alloy 82/182 safe-end welds as shown in the previously indicated schedule. For a preemptive FSWOL, there is no known flaw; therefore, a flaw must be assumed. Section 2(a) defines crack-growth requirements and section 2(b) defines the design requirements.

If through-wall leakage is detected by visual examination on any of the Farley or Vogtle pressurizer Alloy 82/182 safe-end welds, a contingency FSWOL will be applied. In lieu of performing ultrasonic examinations, the flaw will be assumed to be 100% through the original wall thickness for the entire circumference. Flaw characterization will be based on the as-found flaw size as discussed in section 2(a).

Due to the proximity of the adjacent similar metal piping welds, preemptive or contingency overlay of the safe-end welds may preclude the examination of the adjacent similar metal piping weld(s); therefore, the overlay will be extended over the adjacent similar metal piping welds, as necessary. This is expected to include all adjacent similar metal welds with the possible exception of those on the surge lines, where there may be sufficient separation between the dissimilar metal weld and the similar metal weld to allow examination of the similar metal weld after the dissimilar metal weld is overlaid. FNP-2 similar metal welds APR1-4504-2 and APR1-4504-3 are only a few inches apart; therefore, both welds may be overlaid along with the dissimilar metal weld.

These similar metal welds will not be inspected prior to installing the overlay. The selection and examination of the similar metal weld population is currently performed using an NRC approved risk-informed application. The risk-informed application uses failure probability analysis, probabilistic risk assessment, and an expert panel evaluation to identify the piping components that require examination. The piping components selected for examination are only a small portion of the total population of similar metal welds; however, the basic intent of identifying and repairing flaws before piping integrity is challenged is maintained by the risk-informed application. As a final step in the selection process, a statistical model was used to assure that a sufficient number of welds are being examined. The welds adjacent to the dissimilar metal welds were not selected for examination in the risk-informed application and it is concluded that these adjacent similar metal welds do not need to be examined to maintain an acceptable level of quality and safety. After the overlay is applied, these welds will be removed from the risk-informed weld population and examined in accordance with this proposed alternative.

In lieu of using the IWA-4000 Repair Procedures in the Section XI Code, SNC proposes to use the following alternative for the design, fabrication, pressure testing, and examination of the weld overlays. This will provide an acceptable methodology for reducing a defect in austenitic nickel alloy welds to an acceptable size by increasing the wall thickness through deposition of a weld overlay. The methodology is:

1. **General Requirements:**

(a) An FSWOL will be applied by deposition of weld reinforcement (weld overlay) on the outside surface of the low alloy steel pressurizer nozzles (P-No. 3) to the stainless steel safe end (P-No. 8), inclusive of the Alloy 82/182 weld that joins the two items. In addition, the overlay may be extended to include the adjacent wrought stainless steel to stainless steel welds (P-No. 8 to P-No. 8) to improve their inspectability. There are no requirements specified in this proposed alternative for these stainless steel to stainless steel welds (such as flaw growth calculations) because they are not susceptible to stress corrosion cracking in a PWR water environment. The weld reinforcement will consist of Alloy 52/152. (Note: As used in this alternative, the use of Alloy 52/152 refers to the family of filler metals which includes filler metals such as 52, 52M, and 52MS.)

When components subject to being overlaid contain levels of trace chemicals (e.g., sulfur) that could cause unacceptable indications in the Alloy 52/152 weld, an initial layer of low carbon (0.035% max.) austenitic stainless steel and/or an austenitic nickel alloy may be applied as a buffer between the base metal and the Alloy 52/152 overlay. This buffer will be considered as a "non-credited" layer and will provide an acceptable chemical composition to apply the FSWOL. Depending on the chemical composition of the base materials where the weld overlay is to be applied, there may be different ways to apply the first layer of weld material. SNC considered the effects of the buffer layer on the requirements previously set forth in this alternative. Significant points are:

- Code Case N-740, from which this alternative is derived, provides a methodology for the application of low carbon austenitic stainless and austenitic nickel alloys.
- This non-credited buffer layer will not be included in calculations required by this alternative.
- Since the FSWOL over the Alloy 82/182 dissimilar metal weld will continue to consist of Alloy 52/152, there will be no effect on the ability of the overlay to stop the progress of PWSCC.
- A review of the geometry by SNC and EPRI NDE personnel indicated that there will be no appreciable effect on the performance of ultrasonic examinations.
- No effects detrimental to the structure will be introduced by addition of the non-credited buffer layer.

Figures 1, 2, and 3 in Appendix 6 provide typical sketches of the Alloy 52/152 overlay and the materials for each component. If the base metal chemical composition requires, a non-credited layer (not shown in the figures) may be applied as a buffer. Specific dimensions and the overlay thickness are proprietary information and will be documented in the design package.

Prior to deposition of the non-credited buffer layer, the surface will be examined by the liquid penetrant method. Indications larger than 1/16-inch shall be removed, reduced in size, or corrected in accordance with the following requirements.

1. One or more layers of weld metal shall be applied to seal unacceptable indications in the area to be repaired, with or without excavation. The thickness of these layers shall not be used in meeting weld reinforcement design thickness requirements. Peening the unacceptable indication prior to welding is permitted.

2. If correction of indications is required, the area where the weld overlay is to be deposited, including any local repairs or initial weld overlay layer, shall be examined by the liquid penetrant method. The area shall contain no indications greater than 1/16-inch prior to the application of the structural layers of the weld overlay.

Since no credit is being taken for the non-credited buffer layer, the non-credited buffer layer will not be further discussed in this proposed alternative.

(b) The Alloy 52/152 weld overlay filler metal is an austenitic nickel alloy having a chromium (Cr) content of at least 28%. The weld overlay is applied 360 degrees around the circumference of the item, e.g., safe end to nozzle weld, and will be deposited using a Welding Procedure Specification (WPS) for groove welding, qualified in accordance with the Construction Code and Owner's requirements and identified in the Repair/Replacement Plan. As an alternative to the post-weld heat treatment requirements of the Construction Code and Owner's requirements, the provisions for ambient temperature temperbead welding will be used on the ferritic nozzles. (See "Ambient Temperature Temperbead Welding," which is located in Appendix 1 to this proposed alternative). The maximum area of an individual weld overlay on the finished surface of the ferritic material shall be no greater than 300 square inches.

(c) Prior to deposition of the FSWOL, the surface will be examined by the liquid penetrant method. Indications larger than 1/16-inch shall be removed, reduced in size, or corrected in accordance with the following requirements.

1. One or more layers of weld metal shall be applied to seal unacceptable indications in the area to be repaired, with or without excavation. The thickness of these layers shall not be used in meeting weld reinforcement design thickness requirements. Peening the unacceptable indication prior to welding is permitted.

2. If correction of indications identified in 1(c) is required, the area where the weld overlay is to be deposited, including any local repairs or initial weld overlay layer, shall be examined by the liquid penetrant method. The area shall contain no indications greater than 1/16-inch prior to the application of the structural layers of the weld overlay.

(d) Weld overlay deposits shall meet the following requirements:

The austenitic nickel alloy weld overlay shall consist of at least two weld layers deposited using a filler material such as that identified in 1(b). The first layer of weld metal deposited may not be credited toward the required thickness. Alternatively, a diluted layer may be credited toward the required thickness, provided the portion of the layer over the austenitic base material, austenitic filler material weld and the associated dilution zone from an adjacent ferritic base material contains at least 24% Cr. The Cr content of the

deposited weld metal as determined by chemical analysis of the production weld or of a representative coupon taken from a mockup prepared in accordance with the WPS for the production weld shall contain at least 24% Cr.

(e) Welding will only be performed for applications predicted not to have exceeded a thermal neutron fluence of 1×10^{17} (E< 0.5 eV) neutrons per cm^2 prior to welding.

2. Crack Growth Considerations and Design

(a) Crack Growth Considerations - Crack growth calculations will be performed as part of a proprietary design package. Flaw characterization and evaluation requirements shall be based on the as-found flaw in the case of a contingency overlay. For a preemptive overlay, a flaw in the original dissimilar metal weld with a depth of 75% and a circumference of 360 degrees that originates from the inside of the pipe is postulated for crack growth purposes. A 75% through-wall depth flaw is the largest flaw that could remain undetected during the FSWOL preservice examination. This preservice examination will verify there is no cracking in the upper 25% of the original weld wall thickness, and thus verify that the assumption of a 75% through-wall crack is conservative. However, if any crack-like flaws are found during the preservice examination in the upper 25% of the original weld or base materials, the as-found flaw (postulated 75% through wall, plus the portion of the flaw in the upper 25%) would be used for the crack growth analysis. The size of all flaws will be projected to the end of the design life of the overlay. Crack growth, including both stress corrosion and fatigue crack growth, shall be evaluated in the materials in accordance with IWB-3640. If the flaw is at or near the boundary of two different materials, evaluation of flaw growth in both materials is required.

(b) Design of the FSWOL

The design of the FSWOL weld is the same for preemptive overlays and for contingency overlays. The following design analysis shall be completed in accordance with IWA-4311.

1. The axial length and end slope of the weld overlay shall cover the weld and the heat affected zones on each side of the weld, and shall provide for load redistribution from the item into the weld overlay and back into the item without violating applicable stress limits of ASME Section III, NB-3200. Any laminar flaws in the weld overlay shall be evaluated in the analysis to ensure that load redistribution complies with the these requirements. These requirements will usually be satisfied if the weld overlay full thickness length extends axially beyond the projected flaw by at least $0.75\sqrt{Rt}$, where R is the outer radius of the item and t is the nominal wall thickness of the item.

2. Unless specifically analyzed in accordance with 2(b)1 above, the end transition slope of the overlay shall not exceed 45 degrees. A slope of not more than 1:3 is recommended.

3. The thickness of the FSWOL shall be determined based on the assumption of a through-wall flaw, with a length of 360 degrees in the underlying pipe. The overlay will be applied, so that the criteria of IWB-3640 are met after the overlay is applied. The determination of the thickness shall include the deposit analysis requirements of

1(d).

4. The effects of any changes in applied loads, as a result of weld shrinkage from the entire overlay, on other items in the piping system (e.g., support loads and clearances, nozzle loads, changes in system flexibility and weight due to the weld overlay) shall be evaluated. (There are no pre-existing flaws previously accepted by analytical evaluation in the Farley or Vogtle welds to be considered in this evaluation.) Included are:

   i. A stress analysis will be performed that demonstrates that the pressurizer nozzles will perform their intended design function with the FSWOL installed. The stress analysis report will include results showing that the requirements of Subarticles NB-3200 and NB-3600 of the ASME Code, Section III are satisfied. The stress analysis will also include results showing that the requirements of IWB-3000 of the ASME Code, Section XI, are satisfied. The results will show that the postulated crack including its growth in the nozzles would not adversely affect the integrity of the overlaid welds. This analysis will be provided to the NRC prior to entering Mode 4.

   ii. The original leak-before-break (LBB) analyses will be confirmed to be valid after the weld overlays are applied, the amount of shrinkage is determined, and the shrinkage stresses are calculated.

3. Examination and Inspection

In lieu of all other examination requirements, the examination requirements proposed herein shall be met. Nondestructive examination methods shall be in accordance with IWA-2200, except as specified herein. Nondestructive examination personnel shall be qualified in accordance with IWA-2300. Ultrasonic examination procedures and personnel shall be qualified in accordance with Appendix VIII, Section XI, as implemented through the performance demonstration initiative (PDI). (The PDI Program Status for Code Compliance and Applicability developed in June 2005 indicates that the PDI Program is in compliance with Appendix VIII, 2001 Edition of Section XI as amended and mandated by 10 CFR 50.55a, Final Rule dated October 1, 2004.) Ultrasonic examination will be performed to the maximum extent achievable.

<u>Pre-Overlay Examinations</u>

Preemptive overlays for VEGP-1 are scheduled to be applied during the next scheduled refueling outage (Spring 2008). SNC does not plan to perform ultrasonic examinations of the dissimilar metal welds or similar metal welds on VEGP-1 prior to the installation of the overlays. Four of the six dissimilar welds on VEGP-1 have coverage less than 50% and for the other two dissimilar metal welds that are examinable, it is estimated about 0.6 Rem would be required to perform the examinations.

Preemptive overlays for FNP-2 are scheduled to be applied during Spring 2010. Two pressurizer Alloy 82/182 butt welds at FNP-2 were examined using a PDI qualified ultrasonic testing method during the Fall 2005 outage with no evidence of PWSCC. Each of the six FNP-2 pressurizer safe end to nozzle welds was examined during the Spring 2007 outage to

meet MRP-139 requirements. As a result of ultrasonic indications detected in the surge nozzle dissimilar metal weld the weld was overlaid per ISI-GEN-ALT-06-03. SNC does not plan to perform ultrasonic examinations of the dissimilar metal welds or similar metal welds during the outage prior to the application of the overlays. For the remaining five welds it is estimated that about 0.5 Rem would be required to perform the examinations.

Since SNC intends to apply full-structural weld overlays, designed for a worse case through-wall flaw that is 360 degrees in circumference, the dose received from examination of these welds (prior to the overlay being applied) would result in a hardship without a compensating increase in the level of quality and safety.

Post-Overlay Examinations

There are two examinations to be performed after the overlay is installed, i.e., the Acceptance Examination of the Overlay and the Preservice Examination. The purpose of the Acceptance Examination is to assure a quality overlay was installed. The purpose of the Preservice Examination is to provide a baseline for future examinations and to locate and size any cracks that might have propagated into the upper 25% of the original wall thickness and evaluate accordingly. While listed below as two separate examinations the two examinations may be performed during the same time period. SNC will provide the NRC, within 14 days after the completion of the ultrasonic examination of the weld overlay installations, (1) the examination results of the weld overlays and (2) a discussion of any repairs to the overlay material and/or base metal and the reason for repair.

The NDE requirements listed below cover the area that will be affected by application of the overlay. Any PWSCC degradation would be in the Alloy 82/182 weld or the adjacent heat affected zone (HAZ). Further, the original weld and adjacent base materials have received a radiographic examination (RT) prior to the initial acceptance of the existing butt weld. The proposed surface and volumetric examinations provide adequate assurance that any defects produced by welding of the overlay or by extension of pre-existing defects will be identified.

(a) Acceptance Examination of the Overlay

1. The weld overlay shall have a roughness average (RA) of 225 micro-inches (250 RMS) or better and a flatness sufficient to allow for adequate examination in accordance with procedures qualified per Appendix VIII. The weld overlay shall be examined to verify acceptable configuration.

2. The weld overlay and the adjacent base material for at least ½ inch from each side of the weld overlay shall be examined using the liquid penetrant method. The weld overlay shall satisfy the surface examination acceptance criteria for welds of the Construction Code or ASME Section III, NB-5300. The adjacent base metal shall satisfy the surface examination acceptance criteria for base material of the Construction Code or ASME Section III, NB-2500. If ambient temperature temperbead welding is used, the liquid penetrant examination shall be conducted at least 48 hours after the third layer of the weld overlay has been completed. See Appendix 7 for justification.

3. The examination volume A-B-C-D in Figure 1, which is provided in Appendix 2 to

this proposed alternative, shall be ultrasonically examined to assure adequate fusion (i.e., adequate bond) with the base metal and to detect welding flaws, such as interbead lack of fusion, inclusions, or cracks. The interface C-D shown between the overlay and the weld includes the bond and the heat affected zone from the overlay. If ambient temperature temperbead welding is used, the ultrasonic examination shall be conducted at least 48 hours after the third layer of the weld overlay has been completed. See Appendix 7 for justification.

4. Planar flaws shall meet the preservice examination standards of Table IWB-3514-2. In applying the acceptance standards, wall thickness "t_w" shall be the thickness of the weld overlay. For weld overlay examination volumes with unacceptable indications, the unacceptable indications will be removed and the volume will be re-welded. Re-examination per IWB-2420 is not required because unacceptable indications will be removed and the volume will be re-welded.

5. Laminar flaws shall meet the acceptance standards of Table IWB-3514-3 with the additional limitation that the total laminar flaw shall not exceed 10% of the weld surface area and that no linear dimension of the laminar flaw area exceeds 3.0 inches. Additional requirements are:

   i. The reduction in coverage of the examination volume in Figure 1 (which is provided in Appendix 2 to this proposed alternative) due to laminar flaws shall be less than 10%. The dimensions of the uninspectable volume are dependent on the coverage achieved with the angle beam examination of the overlay.

   ii. Any uninspectable volume in the weld overlay beneath a laminar flaw shall be assumed to contain the largest radial planar flaw that could exist within that volume. This assumed flaw shall meet the preservice examination standards of Table IWB-3514-2. In applying the acceptance standards, wall thickness "t_w" shall be the thickness of the weld overlay. Both axial and circumferential planar flaws shall be assumed.

   iii. If the preservice acceptance criteria of Table IWB-3514-2 are not met, the assumed flaw shall be evaluated and shall meet the requirements of IWB-3640. The IWB-3640 evaluation shall be submitted to the NRC within 90 calendar days of the completion of the refueling outage. If the assumed flaw is not acceptable for continued service per IWB-3640, the lamination shall be removed or reduced in area such that the assumed flaw is acceptable per IWB-3640.

6. After completion of all welding activities, affected restraints, supports, and snubbers shall be VT-3 visually examined to verify that design tolerances are met.

(b) Preservice Inspection

1. The examination volume A-B-C-D in Figure 2, which is provided in Appendix 3 to this proposed alternative, shall be ultrasonically examined. The angle beam shall be directed perpendicular and parallel to the piping axis, with scanning performed in four directions, to locate and size any cracks that might have propagated into the upper 25% of the original wall thickness or into the weld overlay.

2. The preservice examination acceptance standards of Table IWB-3514-2 shall be applied to planar indications in the weld overlay material. If the indication is found acceptable per Table IWB-3514-2 the weld overlay will be placed in service and the inservice schedule and acceptance criteria of 3(c) will be followed. In applying the acceptance standards, wall thickness, t_w, shall be the thickness of the weld overlay. Planar flaws not meeting the preservice acceptance standards of Table IWB-3514-2 shall be repaired. Re-examination per IWB-2420 is not required because unacceptable indications will be removed and the volume will be re-welded.

3. Cracks in the outer 25% of the original wall thickness shall meet the design analysis requirements as addressed in Section 2, "Crack Growth Considerations and Design," of this proposed alternative.

(c) Inservice Inspection

Inservice examinations of the FSWOLs will be performed in accordance with Q-4300 and 4310 of Appendix Q to the 2004 Edition of Section XI with Addenda through 2005 with modifications. Appendix 8 shows Q-4300 and 4310 with the SNC modifications shown in italics.

4. Pressure Testing

A system leakage test shall be performed in accordance with IWA-5000.

5. Documentation

Use of this proposed alternative shall be documented on ASME Form NIS-2 or NIS-2A.

Basis for Use:

The use of weld overlay materials resistant to PWSCC (e.g., Alloy 52/152) that create low tensile or compressive residual stress profiles in the original weld provide increased assurance of structural integrity. The weld overlay is of sufficient thickness and length to meet the applicable stress limits from ASME Section III, NB-3200. Crack growth evaluations for PWSCC and fatigue of any as-found flaws or any conservatively postulated flaws will ensure that structural integrity will be maintained.

As a part of the design of the weld overlay, the weld length, surface finish, and flatness are specified in order to allow qualified ASME Section XI, Appendix VIII UT examinations, as implemented through the EPRI Performance Demonstration Initiative (PDI) Program, of the weld overlay and the required volume of the base material and original weld. The examinations specified in this proposed alternative, versus those limited examinations performed on the original dissimilar welds, will provide improved assurance of structural integrity. Further, if no flaws are found in the upper 25% of the original wall thickness by the preservice UT examinations, the postulated 75% through-wall flaw for the preemptive overlays is conservative for crack growth evaluations. If a flaw is detected in the upper 25% of the original material during the preservice examination, the actual flaw size will be used for the crack growth evaluations.

The implementation of the alternative reduces the likelihood for PWSCC in the identified welds and improves piping geometries to permit Appendix VIII UT examinations as implemented through the PDI program. Weld overlay repairs of dissimilar metal welds have been installed and performed successfully for many years in both PWR and BWR applications. The alternative provides improved structural integrity and reduced likelihood of leakage for the primary system. Accordingly, the use of the alternative provides an acceptable level of quality and safety in accordance with 10 CFR 50.55a(a)(3)(i).

Duration of Proposed Alternative: The proposed alternative is applicable to VEGP-1 from May 31, 2007, through May 30, 2017 and applicable for FNP-2 from December 1, 2007 through November 30, 2017.

Precedents: This proposed alternative meets the technical requirements set forth in the April 3, 2007, NRC safety evaluation for alternative ISI-GEN-ALT-06-03, Revision 2.0 (as supplemented by letter dated March 15, 2007) with the single exception that the start of the 48-hour clock prior to performing examinations has been revised. This change to the start of the 48-hour clock has previously been approved by the NRC for Arkansas Nuclear One-Unit 1.

References: None

Status: Approved by SER dated March 10, 2008, ML080580291 (TAC No. MD6307 and MD6308).

APPENDIX 1
AMBIENT TEMPERATURE TEMPERBEAD WELDING

1.0 GENERAL REQUIREMENTS

(a) This appendix applies to dissimilar austenitic filler metal welds between P-Nos. 1, 3, 12A, 12B, and 12C[1] materials and their associated welds and welds joining P-No. 8 or 43 materials to P-No. 1, 3, 12A, 12B, and 12C[1] materials with the following limitation: This Appendix shall not be used to repair SA-302 Grade B material unless the material has been modified to include from 0.4% to 1.0% nickel, quenching and tempering, and application of a fine grain practice.

(b) The maximum area of an individual weld overlay based on the finished surface over the ferritic base material shall be 300 square inches.

(c) Repair/replacement activities on a dissimilar-metal weld in accordance with this Appendix are limited to those along the fusion line of a nonferritic weld to ferritic base material on which 1/8-inch, or less of nonferritic weld deposit exists above the original fusion line.

(d) If a defect penetrates into the ferritic base material, repair of the base material, using a nonferritic weld filler material, may be performed in accordance with this Appendix, provided the depth of repair in the base material does not exceed 3/8-inch.

(e) Prior to welding the area to be welded and a band around the area of at least 1-1/2 times the component thickness or 5 inches, whichever is less, shall be at least 50 degrees Fahrenheit.

(f) Welding materials shall meet the Owner's Requirements and the Construction Code and Cases specified in the Repair/Replacement Plan. Welding materials shall be controlled so that they are identified as acceptable until consumed.

(g) Peening may be used, except on the initial and final layers.

2.0 WELDING QUALIFICATIONS

The welding procedures and the welding operators shall be qualified in accordance with ASME Section IX and the requirements of 2.1 and 2.2 provided below.

2.1 Procedure Qualification

(a) The base materials for the welding procedure qualification shall be of the same P-Number and Group Number, as the materials to be welded. The materials shall be postweld heat treated to at least the time and temperature that was applied to the materials being welded.

[1] P-No. 12C designation refers to specific material classifications originally identified in ASME Section III and subsequently reclassified in a later Edition of ASME Section IX.

(b) The root width and included angle of the cavity in the test assembly shall be no greater than the minimum specified for the repair.

(c) The maximum interpass temperature for the first three layers of the test assembly shall be 150 degrees Fahrenheit.

(d) The test assembly cavity depth shall be at least 1 inch. The test assembly thickness shall be at least twice the test assembly cavity depth. The test assembly shall be large enough to permit removal of the required test specimens. The test assembly dimensions surrounding the cavity shall be at least the test assembly thickness and at least 6 inches. The qualification test plate shall be prepared in accordance with Figure 1-1.

(e) Ferritic base material for the procedure qualification test shall meet the impact test requirements of the Construction Code and Owner's Requirements. If such requirements are not in the Construction Code and Owner's Requirements, the impact properties shall be determined by Charpy V-notch impact tests of the procedure qualification base material at or below the lowest service temperature of the item to be repaired. The location and orientation of the test specimens shall be similar to those required in (f) below, but shall be in the base metal.

(f) Charpy V-notch tests of the ferritic heat-affected zone (HAZ) shall be performed at the same temperature as the base metal test of (e) above. Number, location, and orientation of test specimens shall be as follows:

(i) The specimens shall be removed from a location as near as practical to a depth of one-half the thickness of the deposited weld metal. The coupons for HAZ impact specimens shall be taken transverse to the axis of the weld and etched to define the HAZ. The notch of the Charpy V-notch specimen shall be cut approximately normal to the material surface in such a manner as to include as much HAZ as possible in the resulting fracture. When the material thickness permits, the axis of a specimen shall be inclined to allow the root of the notch to be aligned parallel to the fusion line.

(ii) If the test material is in the form of a plate or a forging, the axis of the weld shall be oriented parallel to the principal direction of rolling or forging.

(iii) The Charpy V-notch test shall be performed in accordance with ASME Section II, Part A, SA-370. Specimens shall be in accordance with SA-370, Figure 11, Type A. The test shall consist of a set of three full-size 10 mm X 10 mm specimens. The lateral expansion, percent shear, absorbed energy, test temperature, orientation and location of all test specimens shall be reported in the Procedure Qualification Record.

(g) The average lateral expansion value of the three HAZ Charpy V-notch specimens shall be equal to or greater than the average lateral expansion value of the three unaffected base metal specimens. However, if the average lateral expansion value of the HAZ Charpy V-notch specimens is less than the average value for the unaffected base metal

specimens and the procedure qualification meets all other requirements of this appendix, either of the following shall be performed:

(1) The welding procedure shall be requalified.

(2) An Adjustment Temperature for the procedure qualification shall be determined in accordance with the applicable provisions of NB-4335.2 of Section III, 2001 Edition with 2002 Addenda. The RT_{NDT} or lowest service temperature of the materials for which the welding procedure will be used shall be increased by a temperature equivalent to that of the Adjustment Temperature.

2.2 Performance Qualification

Welding operators shall be qualified in accordance with ASME Section IX.

3.0 WELDING PROCEDURE REQUIREMENTS

The welding procedure shall include the following requirements.

(a) The weld metal shall be deposited by the automatic or machine GTAW process.

(b) Dissimilar metal welds shall be made using A-No. 8 weld metal (ASME Section IX, QW-442) for P-No. 8 to P-No. 1, 3, or 12 (A, B, or C) weld joints or F-No. 43 weld metal (ASME Section IX QW-432) for P-No. 8 or 43 to P-No. 1, 3, or 12 (A, B, or C) weld joints.

(c) The area to be welded shall be buttered with a deposit of at least three layers to achieve at least 1/8-inch overlay thickness, with the heat input for each layer controlled to within ±10% of that used in the procedure qualification test. The heat input of the first three layers shall not exceed 45,000 J/inch under any conditions. Particular care shall be taken in the placement of the weld layers of the austenitic overlay filler material at the toe of the overlay to ensure that the HAZ and ferritic base metal are tempered. Subsequent layers shall be deposited with a heat input not exceeding that used for layers beyond the third layer in the procedure qualification.

(d) The maximum interpass temperature for field applications shall be 350^0F for all weld layers regardless of the interpass temperature used during qualification. The interpass temperature limitation of QW-406.3 need not be applied.

(e) The interpass temperature shall be determined by (e)(1). If it is not possible to use (e)(1) then (e)(2) and (e)(3) may be used in combination.

(1) Temperature measurement (e.g., pyrometers, temperature indicating crayons, thermocouples) during welding. Trending of the interpass temperatures during installation of overlays using contact pyrometers has shown that the difference between the observed temperatures and the maximum allowable interpass temperature of 350^0F is large and considerable margin exists. Based on this trending, there is reasonable assurance that the temperature of any bead will not approach the maximum allowable temperature. For the surge nozzle, SNC will measure the interpass temperature at a

frequency of at least every fifth bead deposition. After the third layer is completed, there is sufficient weld thickness where the heat of welding will not affect the low-alloy steel base material; therefore, interpass temperature measurements will not be necessary. For the smaller diameter safety, relief, and spray nozzles, SNC will monitor the interpass temperature every weld pass for the first three layers. For additional layers, the frequency of measuring interpass temperature may be reduced when the temperature is at least 100^0 F below the 350^0 F limit and trend data supports a reduced monitoring frequency.

(2) Heat flow calculations using the variables listed below as a minimum.
   (i) welding heat input
   (ii) initial base material temperature
   (iii) configuration, thickness, and mass of the item being welded
   (iv) thermal conductivity and diffusivity of the materials being welded
   (v) arc time per weld pass and delay time between each pass
   (vi) arc time to complete the weld

(3) Measurement of the maximum interpass temperature on a test coupon that is equal to or less than the thickness of the item to be welded. The maximum heat input of the welding procedure shall be used in the welding of the test coupon.

(f) Particular care shall be given to ensure that the weld region is free of all potential sources of hydrogen. The surfaces to be welded, filler metal, and shielding gas shall be suitably controlled.

APPENDIX 1
AMBIENT TEMPERATURE TEMPERBEAD WELDING

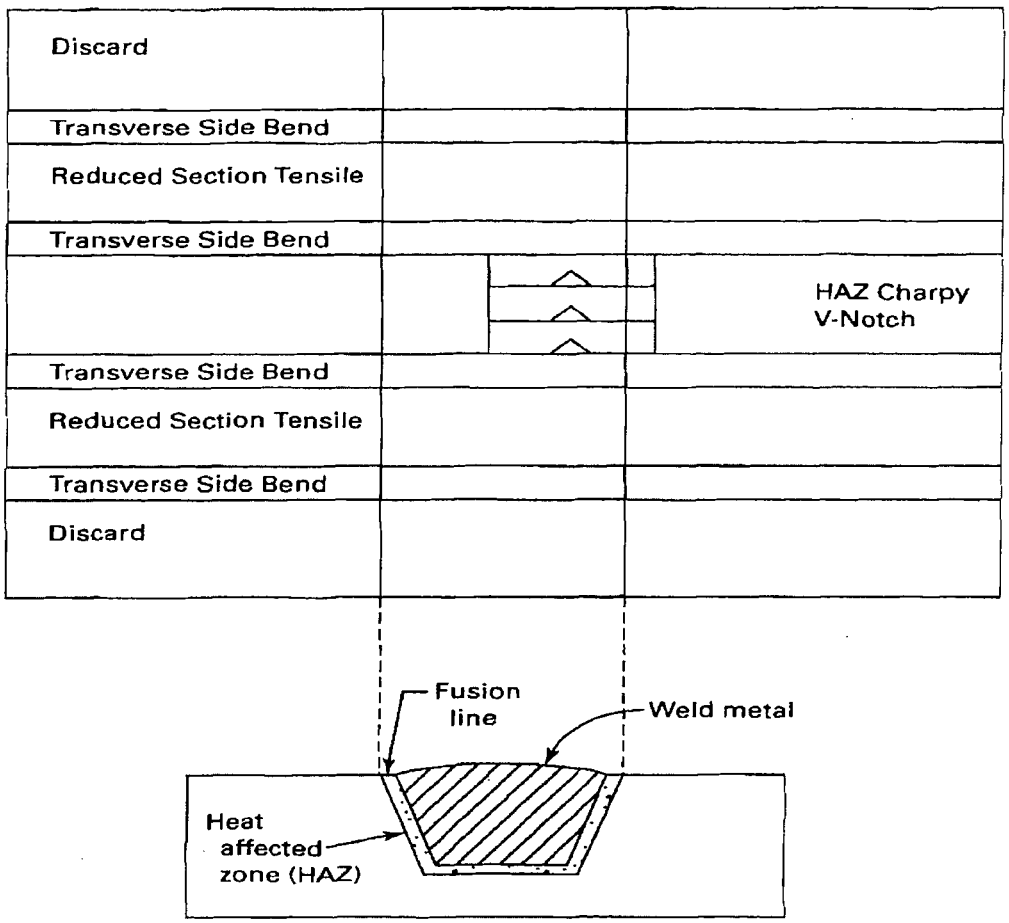

Base metal Charpy impact specimens are not shown. This figure illustrates a similar-metal weld.

Figure 1-1: QUALIFICATION TEST PLATE

APPENDIX 2
UT ACCEPTANCE EXAMINATION VOLUME

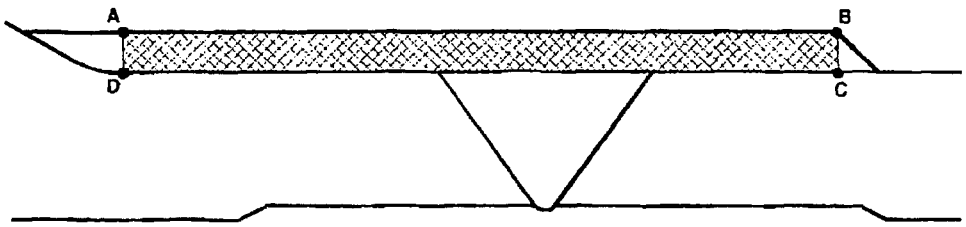

Examination Volume A-B-C-D

FIGURE 1: ACCEPTANCE EXAMINATION VOLUME

APPENDIX 3
PRESERVICE EXAMINATION VOLUME

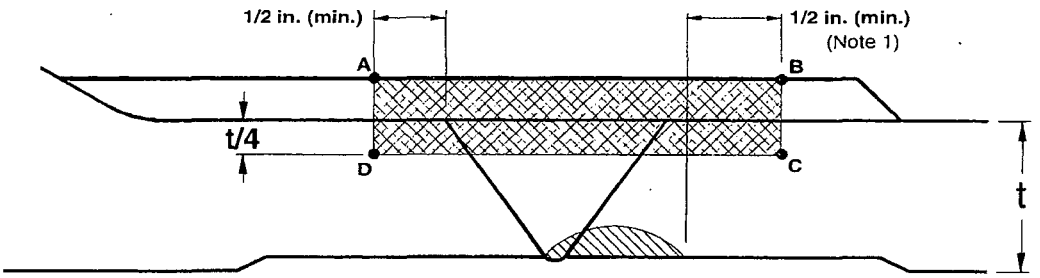

Examination Volume A-B-C-D

FIGURE 2: PRESERVICE EXAMINATION VOLUME

APPENDIX 4
COMPARISON OF SNC-PROPOSED ALTERNATIVE VERSUS CODE CASE N-504-2

Comparison of Proposed Alternative with N-504-2	
CODE CASE N-504-2	**PROPOSED ALTERNATIVE**
N-504-2 for weld overlay repair of SS piping	Proposed alternative is for dissimilar metal weld overlay repairs.
Reply-reduce a flaw to acceptable size by weld overlay on austenitic SS piping	*Reply*- reduce a flaw to acceptable size by weld overlay on austenitic stainless steel or austenitic nickel alloy piping, components and associated welds
Material covered is P-8	Per Section 1.0(a) of Appendix 1 materials covered are P-8 or P-43 and P-1, 12A, 2B or 12c or between P-1, 3, 12A, 12B or 12C. Also includes P-8 to P-43, P-8 to P-8 or P-43 to P-43 joined with austenitic filler materials
(b) Filler Material – low C (0.035% max) SS	(b) Filler Materials – Low C (0.035% max) SS or austenitic nickel alloy (28% Cr min.)
(c) (d) Repair of indications prior to overlay	(c) Repair of indications prior to overlay (Same as N-504-2)
(e) Weld Reinforcement Min. 2 layers with-7.5 FN. In first austenitic SS layer 5 FN acceptable by evaluation.	(d) Weld Reinforcement (1) Min. 2 layers with-7.5 FN. In first layer 5FN acceptable if deposited weld metal less than 0.02% C. (2) Provides requirements for austenitic nickel alloy weld overlay.
(f) (g) Design – Requires flaw evaluation of the existing flaw based on IWB-3640 for design life. Requires postulated 100 % through wall for design of the weld overlay (full-structural) except for four or fewer axial flaws. Meet ASME Section III for primary local and bending stresses and secondary peak stresses. Requires end transition slope less than 45 degrees. Axial length requirement usually met if overlay 0.75 $(Rt)^{1/2}$ beyond flaws. Shrinkage and other applied loads evaluated on other items and other flawed welds in system.	2.0 Design Requires flaw evaluation of the existing flaw based on IWB-3640. Flaw evaluation of both materials required if flaw is at or near the boundary. Requires postulated 100 % through wall for design (full-structural) of the weld overlay. Axial length and end slope shall cover the weld and heat affected zones and shall provide for load redistribution into the item and back into the overlay either out violating stress limits. There is no exception for four or fewer axial flaws. Design analysis per IWA-4311. Meet ASME Section III, NB-3200 applicable stress limits. Any laminar flaws in the weld overlay evaluated to ensure load distribution meets NB-3200. Same as N-504-2 for shrinkage and evaluation of other existing flaws.

APPENDIX 4
COMPARISON OF SNC-PROPOSED ALTERNATIVE VERSUS CODE CASE N-504-2
(Continued)

Comparison of Proposed Alternative with N-504-2	
N-504-2	**PROPOSED ALTERNATIVE**
(i) No specific reference given for acceptance examination of the weld overlay. Acceptance criteria of the Construction Code and Section III would be applicable. (Causes problems with volumetric acceptance criteria since construction criteria based on RT examination rather than UT examination. Also presents difficulty in determining applicable criteria for laminar flaws in the overlay) Preservice Exams to the methods of IWB-2200. Exam procedures shall be specified in the Repair Program. Acceptance standard-IWB-3514-2 (planar flaws). UT exams to verify integrity of new applied weld reinforcement. Include upper 25% of pipe wall in the examination.	3.0 Examination and Inspection Examinations in the proposed alternative shall be met in lieu of all other exams. NDE methods to IWA-2200 except as specified in the case. NDE personnel qualified to IWA-2300. UT procedures and personnel qualified to Section XI, Appendix VIII. (a) Acceptance Examinations-Surface finish 250 micro-inch (or 225 RA) and flatness sufficient to allow adequate examination in accordance with Appendix VIII procedures. PT the overlay and ½-inch on either side of the overlay. Acceptance standards for the PT of the weld overlay, meet weld Construction Code criteria or NB-5300. Base material, meet base material criteria or NB-2500. A 48-hour hold time after the third layer is completed is imposed when ambient temperature temperbead welding is used. UT examination for acceptance Figure 1 shows the examination volume. IWB-3514-2 for planar flaw acceptance. IWB-3514-3 for laminar flaw acceptance with additional limitation not to exceed 10% of the surface area and no linear dimension in excess of 3 inches. Reduction in coverage limited to 10%. Criteria for radial planar flaw size in the uninspected volume for IWB-3640 evaluation. VT-3 of affected restraints, snubbers and supports to verify design tolerances are met. (b) Preservice Examinations Figure 2 defines the examination volume. Angle beam exam parallel and perpendicular to piping axis. Scan in four directions to locate and size flaws. Acceptance criteria IWB-3514-2 for the overlay. Wall thickness t_w is the thickness of the overlay. Flaws in outer 25% of base material meet design requirements of 2.0. (c) Inservice Examinations

APPENDIX 4
COMPARISON OF SNC-PROPOSED ALTERNATIVE VERSUS CODE CASE N-504-2
(Continued)

Comparison of Proposed Alternative with N-504-2	
N-504-2	**PROPOSED ALTERNATIVE**
	Use Q-4300 of Appendix Q to the 2004 Edition of Section XI with Addenda through 2005. (d) Additional Examinations Use Q-4300 of Appendix Q to the 2004 Edition of Section XI with Addenda through 2005.
(h) System Hydrostatic Test if pressure boundary penetrated (leak). System Leakage Test if pressure boundary not penetrated (no leak).	4.0 Pressure Testing System Leakage Test per IWA-5000
(k) VT-3 of snubbers, supports and restraints after welding	Covered under 3.0 (a) Acceptance Examinations
(l) Reference to other applicable requirements of IWA-4000	IWA-4000 requirements would be met unless an alternative provided
(m) Use of case to be documented on an NIS-2 form	5.0 Documentation Use of case to be documented on an ASME Form NIS-2 (or ASME Form NIS-2A).

APPENDIX 5
COMPARISON OF SNC-PROPOSED ALTERNATIVE VERSUS CODE CASE N-638-1

Comparison of Appendix 1 of Proposed Alternative with N-638-1	
N-638-1	**APPENDIX 1 OF THE PROPOSED ALTERNATIVE**
Code Case N-638-1 provides rules for automatic or machine GTAW temperbead welding without pre-heat or post weld heat treatment. The case covers similar and dissimilar welding for cavity and overlay repairs. The code case permits the use of NDE examinations in accordance with the case in lieu of those in the Construction Code. This case has a broader scope of use then Appendix 1.	Appendix 1 is invoked in by 1.(b) of the alternative for use of ambient temperature temperbead welding as an alternative to the post weld heat treatment requirements of the Construction Code and Owner's requirements. The appendix provides the ambient temperature temperbead requirements applicable to dissimilar metal weld overlay repairs. NDE requirements are in lieu of the Construction Code and were covered in Section 3.0 of the alternative.
1.0 General Requirements	1.0 General Requirements
Scope of welds in the Reply	(a) Scope of welds. Same as N-638-1
(a) Max area of finished surface of the weld limited to 100 square inches and half of the ferritic base metal thickness. (Note: the depth requirement is for the ferritic material. There is no need to limit either surface area or depth for welding on austenitic SS or nickel alloys since no post weld heat treatment is required.)	(b) Surface area limitation 300 square inches over the <u>ferritic material</u>. (Note: Code Case N-638-3 which has been approved by ASME but has not been issued in Supplement 9. Residual stress analyses results show that stresses for 100 square inches through 500 square inches surface area overlays very similar.)
(b) (c) (d) (e) (f)	(c) (d) (e) (f) (g) same as requirements listed for N-638-1
1.0 Welding Qualifications The welding procedures and welding operators shall be qualified in accordance with Section IX and the requirements of 2.1 and 2.2	2.0 Welding Qualifications The welding procedures and welding operators shall be qualified in accordance with Section IX and the requirements of 2.1 and 2.2
2.1 Procedure Qualification Sections (a) (d) (e) (f) (g) Section (h) Section (i) Section (j)	2.1 Procedure Qualification Sections (a) (b) (c) (d) (e) same as in N-638-1 for equivalent paragraphs. Equivalent paragraph not in Appendix 1. Section (f) same as (i) from N-638-1. Section (g) changed the first sentence adding "lateral expansion" in front of "value" both at the beginning and end of the sentence. Additional provisions as follow were added: However if the average lateral expansion value of the HAZ Charpy V-notch specimens is less than the average value of the unaffected base metal specimen and the procedure qualification meets

APPENDIX 5
COMPARISON OF SNC-PROPOSED ALTERNATIVE VERSUS CODE CASE N-638-1
(Continued)

	all other requirements of this appendix, either of the following shall be performed: (1) The welding procedure shall be requalified. (2) An Adjustment Temperature for the procedure qualification shall be determined in accordance with the applicable provisions of NB-4335.3 of Section III, 2001 Edition with 2002 Addenda. RT_{ndt} or lowest service temperature of the materials for which the welding procedure will be used shall be increased by a temperature equivalent to that of the Adjustment Temperature. This is identical wording to N-638-2, which has been approved by ASME.
Section (b) Provisions for welding in a pressurized environment	Not included for overlays in Appendix 1.
Section (c) Provisions to address radiation effects	Not included in Appendix 1. Thermal neutron limitation imposed in the proposed alternative.
1.1 Performance Qualification Welding operators shall be qualified in accordance with Section IX.	2.2 Performance Qualification Welding operators shall be qualified in accordance with Section IX.
3.0 Welding Procedure Requirements	3.0 Welding Procedure Requirements
(no corresponding section)	(e) Section added to clarify temperature measurement requirements. This is identical wording to N-638-2, which has been approved by ASME.
(a) (b) (c) (d)	(a) (b) (c) same as N-638-1 except last two sentences deleted in (c) from N-638-1 since not applicable to this proposed alternative. (d) same as N-638-1 but the following added: The interpass temperature of QW-406.3 need not be applied. This is identical wording to N-638-2, which has been approved by ASME.
(no corresponding section)	(e) Section added to clarify temperature measurement requirements. This is identical wording to N-638-2, which has been approved by ASME.
(e)	(f) same as (e) from N-638-1
4.0 Examination The final weld surface and the band around the area	Examination and Inspection is shown in Section 3 of the proposed alternative.

APPENDIX 5
COMPARISON OF SNC-PROPOSED ALTERNATIVE VERSUS CODE CASE N-638-1
(Continued)

defined in paragraph 1.0(d) of N-638-1 shall be examined using surface and ultrasonic methods when the completed weld has been at ambient temperature for at least 48 hours.	
5.0 Documentation	Documentation is shown in Section 5 of the proposed alternative.
(no corresponding section)	Pressure Testing is shown in Section 4 of the proposed alternative.

APPENDIX 6
TYPICAL FIGURES

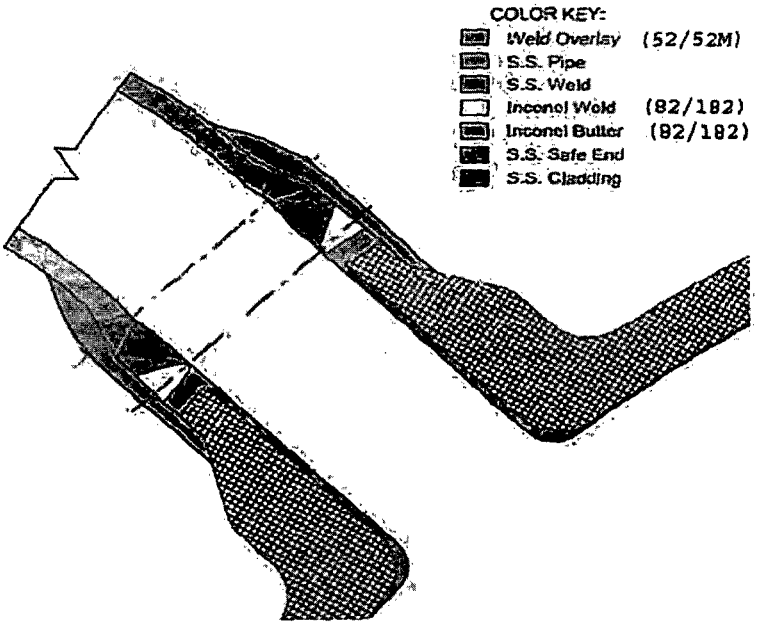

Figure 1 – Typical safety / relief nozzle configuration

APPENDIX 6
TYPICAL FIGURES
(Continued)

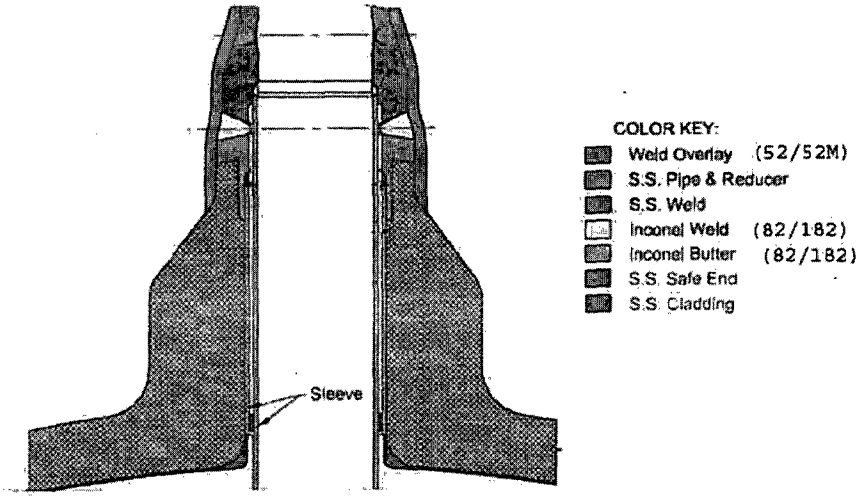

Figure 2 – Typical spray nozzle configuration

APPENDIX 6
TYPICAL FIGURES
(Continued)

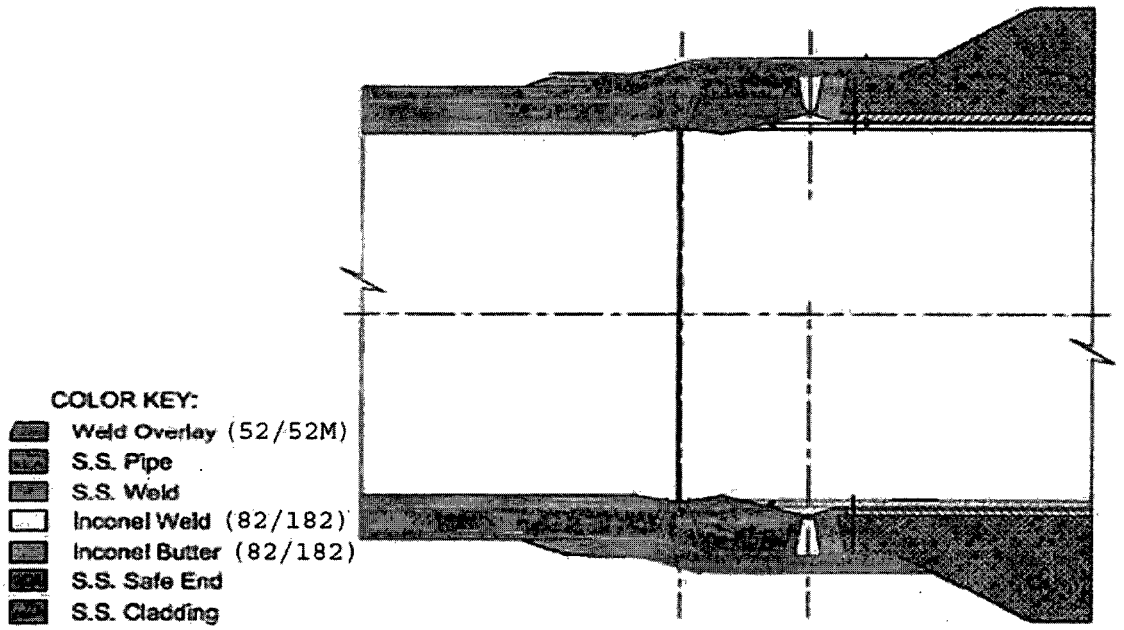

Figure 3 – Typical surge nozzle configuration

APPENDIX 7
JUSTIFICATION FOR THE CHANGE TO THE 48 HOUR HOLD TIME

American Society of Mechanical Engineers (ASME) Code, Section XI, Code Case N-638-1 requires (when ambient temperbead welding is used over ferritic materials) that surface and ultrasonic examinations be performed when the completed weld has been at ambient temperature for least 48 hours. This delay was provided to allow sufficient time for hydrogen cracking to occur (if it is to occur) in the heat affected zone (HAZ) of ferritic materials prior to performing examinations, to ensure detection by non-destructive examinations (NDE). However, based on research and industry experience, EPRI has provided a technical basis for starting the 48-hour hold after completion of the third temperbead weld layer rather than waiting for the weld overlay to cool to ambient temperature. Weld layers beyond the third layer are not designed to provide tempering to the ferritic HAZ during ambient temperature temperbead welding. EPRI has documented their technical basis in Technical Update report 1013558, "Repair and Replacement Applications Center: Temperbead Welding Applications 48-Hour Hold Requirements for Ambient Temperature Temperbead Welding" (ADAMS Accession No. ML070670060). The technical data provided by EPRI in their report is based on testing performed on SA-508, Class 2 low-alloy steels, which is the material of the FNP and VEGP pressurizer nozzles.. After evaluating all of the issues relevant to hydrogen cracking such as microstructure of susceptible materials, availability of hydrogen, applied stresses, temperature, and diffusivity and solubility of hydrogen in steels, EPRI concluded that: "...[t]here appears to be no technical basis for waiting the 48 hours after cooling to ambient temperature before beginning the NDE of the completed weld. There should be no hydrogen present, and even if it were present, the temperbead welded component should be very tolerant of the moisture..." EPRI also notes that over 20 weld overlays and 100 repairs have been performed using temperbead techniques on low alloy steel components over the last 20 years. During this time, there has never been an indication of hydrogen cracking by the non-destructive examinations performed after the 48-hour hold or by subsequent ISI examinations.

In addition, the ASME database, C&S Connect, for Code Case N-638-4 contains background material consisting of a Technical Basis Paper to support the 48-hour hold time alternative. The Technical Basis Paper (ADAMS Accession No. ML070790679) points out that the introduction of hydrogen to the [ferritic] HAZ is limited to the first weld layer since this is the only weld layer that makes contact with the [ferritic] base material. While the potential for the introduction of hydrogen to the [ferritic] HAZ is negligible during subsequent weld layers, these layers provide a heat source that accelerates the dissipation of hydrogen from the [ferritic] HAZ in non-water backed applications. The Technical Basis Paper concludes that there is sufficient delay time to facilitate the detection of potential hydrogen cracking when NDE is performed 48 hours after completion of the third weld layer.

Furthermore, the solubility of hydrogen in austenitic materials such as Alloy 52M is much higher than that of ferritic materials while the diffusivity of hydrogen in austenitic materials is lower than that of ferritic materials. As a result, hydrogen in the ferritic HAZ tends to diffuse into the austenitic weld metal, which has a much higher solubility for hydrogen. This diffusion process is enhanced by heat supplied in subsequent weld layers.

Based on this information, SNC concludes that performing NDE 48 hours after the third weld layer is installed will provide an acceptable level of quality and safety. As a precedent see the April 6, 2007, safety evaluation for Arkansas Nuclear One, Unit 1 (TAC NO. MD4019.)

APPENDIX 8
INSERVICE INSPECTION OF WELD OVERLAYS

Q-4300 Inservice Examination Requirements

(a) The weld overlay examination volume in Fig. Q-4300-1 shall be added to the inspection plan and shall be ultrasonically examined during the first or second refueling outage following application.

(b) The weld overlay examination volume in Fig. Q-4300-1 shall be ultrasonically examined to determine if any new or existing cracks have propagated into the upper 25% of the pipe base material or into the overlay. The angle beam shall be directed perpendicular and parallel to the pipe axis, with scanning performed in four directions.

Modified Q-4300 Inservice Flaw Evaluation Requirements

(a) Flaws characterized as PWSCC in the Alloy 52/152 weld overlay are unacceptable and the use of IWB-3514-2 and IWB-3640 for PWSCC evaluation in the Class 1 overlay material is prohibited.

(b) For non-PWSCC flaws in the Alloy 52/152 overlay, Table IWB-3514-2 must be used to evaluate recordable indications prior to the use of the acceptance criteria of IWB-3600. If the requirements of Table IWB-3514-2 cannot be satisfied, the acceptance criteria of IWB-3600 shall be satisfied. For unacceptable indications, the weld overlay (or the portion of the weld overlay containing the unacceptable indication) shall be removed and corrected by a repair/replacement activity in accordance with IWA-4000.

(c) If examinations reveal crack growth or new cracking in the upper 25% of the original weld or base materials, the as-found flaw (postulated 75% through wall, plus the portion of the flaw in the upper 25%) will be used to re-evaluate the crack growth analysis. The size of all flaws will be projected to the end of the design life of the overlay. Crack growth, including both stress corrosion and fatigue crack growth, shall be evaluated in the materials in accordance with IWB-3640. If the flaw is at or near the boundary of two different materials, evaluation of flaw growth in both materials is required. For unacceptable indications, the weld overlay shall be removed, including the original defective piping weldment, and corrected by a repair/replacement activity in accordance with IWA-4000.

Modified Q-4300 Re-examination Requirements

(a) Weld overlay examination volumes that show no indication of crack growth or new cracking shall be placed into a population to be examined on a sampling basis. Twenty-five percent of this population shall be examined once every ten years.

(b) If inservice examinations reveal *acceptable* crack growth or new cracking *in the upper 25% of the original weld or base materials*, the weld overlay examination volume shall be reexamined during the first or second refueling outage following discovery of the growth or new cracking. Weld overlay examination volumes that show no additional indication of crack growth or new cracking shall be placed into a population to be examined on a sample basis. Twenty-five percent of this population shall be examined once every ten years.

(c) *If inservice examinations reveal acceptable non-PWSCC flaws in the overlay material, the weld overlay examination volume shall be reexamined during the first or second refueling outage following discovery of the growth or new cracking. Weld overlay examination volumes that show no additional indication of crack growth or new cracking shall be placed into a population to be examined on a sample basis. Twenty-five percent of this population shall be examined once every ten years.*

Q-4310 Additional Examinations

If inservice examinations reveal an unacceptable indication, crack growth into the weld overlay design thickness, or axial crack growth beyond the specified examination volumes, additional weld overlays, equal to the number scheduled for the current inspection period, shall be examined prior to return to service. If additional unacceptable indications are found in the second sample, a total of 50% of the total population of weld overlays shall be examined prior to operation. If additional unacceptable indications are found, the entire remaining population of weld overlays shall be examined prior to return to service.

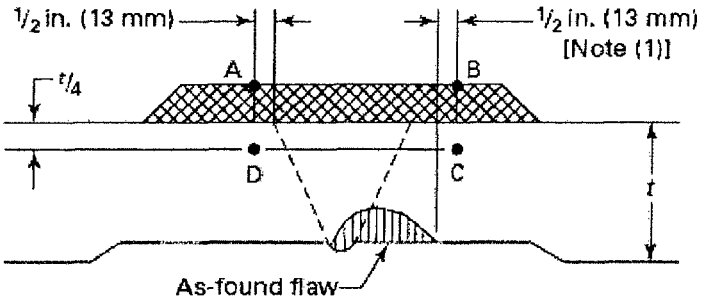

Examination Volume A–B–C–D

NOTE:
(1) For axial or circumferential flaws, the axial extent of the examination volume shall extend at least ½ in. (13 mm) beyond the as-found flaw and at least ½ in. (13 mm) beyond the toes of the original piping weldment, including weld end butter, where applied.

FIG. Q-4300-1 PRESERVICE AND INSERVICE EXAMINATION VOLUME

Enclosure 2

ISI-GEN-ALT-07-01, Version 2.0
Commitment Table

List of Regulatory Commitments

Commitment	Type		Scheduled Completion Date (If Required)
	One-Time Action	Continuing Compliance	
SNC will report to the NRC, prior to entering Mode 4, the stress analysis report which will include results showing that the requirements of Subarticles NB-3200 and NB-3600 of the ASME Code, Section III are satisfied. The stress analysis will also include results showing that the requirements of IWB-3000 of the ASME Code, Section XI, are satisfied. The results will show that the postulated crack including its growth in the nozzles would not adversely affect the integrity of the overlaid welds.	X		Vogtle 1, Outage 1R14 (Spring 2008), prior to entering Mode 4 Farley 2, Outage 2R20 (Spring 2010), prior to entering Mode 4
SNC will report to the NRC, within 14 days after the completion of the ultrasonic examination of the weld overlay installations, (1) the examination results of the weld overlays and (2) a discussion of any repairs to the overlay material and/or base metal and the reason for repair.	X		Vogtle 1, Outage 1R14 (Spring 2008), within 14 days after ultrasonic examination of weld overlay installations Farley 2, Outage 2R20 (Spring 2010), within 14 days after ultrasonic examination of weld overlay installations
SNC will report to the NRC, within 90 calendar days of the completion of the refueling outage, the IWB-3640 evaluation performed for any assumed flaw in any uninspectable volume in the weld overlay beneath a laminar flaw, if that assumed flaw failed to meet the preservice acceptance criteria of Table IWB-3514-2.	X		Vogtle 1, Outage 1R14 (Spring 2008), within 90 calendar days of the completion of the refueling outage Farley 2, Outage 2R20 (Spring 2010), within 90 calendar days of the completion of the refueling outage

Enclosure 3

Response to Request for Additional Information
Regarding Request for Alternative, ISI-GEN-ALT-07-01, Version 1.0
Application of Pressurizer Nozzles Full-Structural Weld Overlays

NRC Request 1

In Enclosure 1 of the July 24, 2007 submittal, section 3(c) on page 12, Southern Nuclear Operating Company (the licensee) stated that the inservice inspection of the weld overlay will be performed in accordance with paragraph Q-4300 of Appendix Q to the 2004 Edition of the American Society of Mechanical Engineers Boiler and Pressure Vessel Code (ASME Code), Section XI with Addenda through 2005. Appendix Q also contains paragraph Q-4310, which provides requirements for additional examinations of the weld overlay. However, Section 3(c) does not reference paragraph Q-4310 explicitly. Clarify whether paragraph Q-4310 of Appendix Q to the 2004 Edition of the ASME Code, Section XI, is required as part of Section 3(c) of ISI-GEN-ALT-07-01, Version 1.0.

SNC Response to Request 1

Q-4310 is a subset of Q-4300 and will be used by SNC. For clarity, Section 3(c) of the proposed alternative has been revised to reference Q-4310. See ISI-GEN-ALT-07-01, Version 2.0, as shown in Enclosure 1.

NRC Request 2

Per Section 3(c) of ISI-GEN-ALT-07-01, Version 1.0, Paragraph (c) of Q-4300 of Appendix Q states that: "The inservice examination acceptance standards of Table IWB-3514-2 shall be satisfied for the weld overlay. Alternatively, for Class 1, 2, or 3 piping systems, the acceptance criteria of IWB-3600, IWC-3600, or IWD-3600 as applicable, shall be satisfied for the weld overlay..."

(a) The Nuclear Regulatory Commission (NRC) staff's position on indications or flaws detected in the weld overlay has been that primary water stress corrosion cracking (PWSCC) cannot be accepted by IWX-3600 (X = B, C, and D) and cannot be allowed to remain in service (even if the flaws are acceptable per IWB-3514-2) because the industry operating experience and national laboratories tests have suggested that the growth rate of PWSCC can be aggressive and unpredictable. In addition, the current ASME Code, Section XI does not have the crack growth rate for PWSCC in Alloy 82/182 material. Therefore, the licensee should either revise the above requirement to prohibit its use on PWSCC flaws, or justify the above acceptance criteria with respect to PWSCC flaws.

(b) The above quoted statements can be interpreted that the acceptance criteria of IWB-3600 may be used in lieu of the acceptance criteria of Table IWB-3514-2. The intent of the ASME Code is that the acceptance criteria of Table IWB-3514-2 must be used to evaluate recordable indications prior to the use of the acceptance criteria of IWB-3600. The above statements should be changed to read: "The inservice examination acceptance standards of Table IWB-3514-2 shall be satisfied for the weld overlay. If Table IWB-3514-2 cannot be satisfied, for Class 1, 2, or 3 piping systems, the acceptance criteria of IWB-3600, IWC-3600, or IWD-3600 as applicable, shall be satisfied for the weld overlay. Clarify the above statements in Paragraph (c) of Q-4300 of Appendix Q. Discuss the need to revise the above requirement for clarification.

Response to NRC Request 2(a)

Since the weld overlay material is Alloy 52/152, having a minimum 28% chromium content, it is resistant to PWSCC. In the unlikely case that flaws characterized as PWSCC grow into the Alloy 52/152 weld

overlay, SNC agrees that the overlay is not acceptable for continued service without repair. Therefore, the use of IWB-3514-2 and IWB-3640 for PWSCC evaluation in the Class 1 overlay is prohibited.

Section 3(c) of the proposed alternative has been revised to reference Appendix 8. Appendix 8 is an SNC re-write of Q-4300 for "flaw evaluation" and "re-examination" requirements to differentiate between PWSCC flaws and non-PWSCC flaws. It includes a clarification *that the use of IWB-3514-2 and IWB-3640 for PWSCC evaluation in the Class 1 overlay material is prohibited.* See Section 3(c) and Appendix 8 of ISI-GEN-ALT-07-01, Version 2.0, as shown in Enclosure 1.

Response to NRC Request 2(b)

Section 3(c) of the proposed alternative has been revised to reference Appendix 8. Appendix 8 is an SNC re-write of Q-4300 for "flaw evaluation" and "re-examination" requirements to differentiate between PWSCC flaws and non-PWSCC flaws. It includes a clarification that *Table IWB-3514-2 must be used to evaluate recordable indications prior to the use of the acceptance criteria of IWB-3600.* See Section 3(c) and Appendix 8 of ISI-GEN-ALT-07-01, Version 2.0, as shown in Enclosure 1.

NRC Request 3

Per Section 3(c) of ISI-GEN-ALT-07-01, Version 1.0, one of the requirements of Paragraph (c) of Q-4300 of Appendix Q states that "...Cracks in the outer 25% [percent] of the pipe base metal shall meet the design analysis requirements of Q-3000...". The licensee stated in the submittal that it does not plan to perform ultrasonic examination (UT) of the dissimilar metal weld prior to installation of the weld overlay at VEGP-1. This means that the structural integrity of the original dissimilar metal butt weld is not known. After the weld overlay installation, the licensee will perform UT examinations per the proposed alternative. However, the UT examination is only qualified to examine the outer 25 percent of the base metal (dissimilar metal weld) thickness after weld overlay installation. This means that the structural integrity of the inner 75 percent of the base metal cannot be verified. In this case, the licensee needs to assume a worst-case flaw in the inner 75 percent of the base metal/dissimilar metal weld thickness. The worst-case flaw would have a depth of inner 75 percent through wall of the dissimilar metal weld circumferentially and axially. If a crack is detected in the upper 25 percent of the dissimilar metal weld during inservice inspection of the weld overlay, the initial crack in the crack growth calculation should be modeled with a depth of the detected crack in the 25 percent region plus the depth of the worst-case assumed crack of 75 percent through wall. Section 2(a) of ISI-GEN-ALT-07-01, Version 1.0, has addressed this issue with the appropriate requirement (i.e., detected flaw depth plus worst-case flaw depth). However, Section 3(c) has not addressed this issue with respect to the inservice inspection. Please justify the adequacy of the above requirement in Section 3(c), or revise Section 3(c) to be consistent with the requirements of Section 2(a).

Response to NRC Request 3

Section 3(c) of the proposed alternative has been revised to reference Appendix 8. Appendix 8 is an SNC re-write of Q-4300 for "flaw evaluation" and "re-examination" requirements to differentiate between PWSCC flaws and non-PWSCC flaws. It includes a clarification that *if a crack is detected in the upper 25 percent of the dissimilar metal weld during inservice inspection of the weld overlay, the initial crack in the crack growth calculation should be modeled with a depth of the detected crack in the 25 percent region plus the depth of the worst-case assumed crack of 75 percent through wall.* See Section 3(c) and Appendix 8 of ISI-GEN-ALT-07-01, Version 2.0, as shown in Enclosure 1.

NRC Request 4

In Appendix 2, Figure 1, of Enclosure 1, the licensee presented 3 figures for weld overlay examination volume. However, in Section 3(a)(3) of ISI-GEN-ALT-07-01, Version 1.0, the licensee only referred to Figure 1a and not to Figures 1b and 1c. Also, Figures 1b and 1c were not discussed in other parts of the proposed alternative. Discuss why figures 1b and 1c are included in Appendix 2 if they are not being discussed in ISI-GEN-ALT-07-01, Version 1.0.

Response to NRC Request 4

Figures 1b and 1c were removed. Figure 1a was then renamed as Figure 1. See ISI-GEN-ALT-07-01, Version 2.0 in Enclosure 1.

SOUTHERN NUCLEAR OPERATING COMPANY
VEGP-ISI-ALT-01, VERSION 1.0
CLASS 1 PRESSURE RETAINING WELDS IN PIPING, SUBJECT TO ASME SECTION XI, APPENDIX VIII, SUPPLEMENT 11, EXAMINATION (WELD OVERLAY EXAMINATIONS)

Plant Site - Unit: Vogtle Electric Generating Plant (VEGP) - Units 1 and 2.

Interval-Interval Dates: 3rd ISI Interval extending from May 31, 2007, through May 30, 2017.

Requested Date for Approval: Approval is requested by August 20, 2009, to support examinations performed during the 1R15 outage (scheduled for September 2009).

ASME Code Components Affected: Class 1 pressure retaining welds in piping, subject to ASME Section XI, Appendix VIII, Supplement 11, examination (weld overlay examinations).

Applicable Code Edition and Addenda: ASME Section XI, 2001 Edition through the 2003 Addenda is the overall 3rd Interval Code of Record. However, 10 CFR 50.55a(b)(2)(xxiv) prohibits the use of Appendix VIII and Supplements to Appendix VIII of the 2002 Addenda through the 2003 Addenda; therefore, the 2001 Edition is used.

Applicable Code Requirements: The Code requirements for which an alternative is requested are all contained within Appendix VIII, Supplement 11. For example, paragraph 1.1(d)(1) requires that all base metal flaws be cracks. Paragraph 1.1(e)(1) requires that at least 20% but less than 40% of the flaws shall be oriented within ±20 degrees of the pipe axial direction. Paragraph 1.1(e)(1) also requires that the rules of IWA-3300 shall be used to determine whether closely spaced flaws should be treated as single or multiple flaws. Paragraph 1.1(e)(2)(a)(1) requires that a base grading unit shall include at least 3 inches of the length of the overlaid weld. Paragraph 1.1(e)(2)(b)(1) requires that an overlay grading unit shall include the overlay material and the base metal-to-overlay interface of at least 6 square inches. The overlay grading unit shall be rectangular, with minimum dimensions of 2 inches. Paragraph 3.2(b) requires that all extensions of base metal cracking into the overlay material by at least 0.1 inch are reported as being intrusions into the overlay material.

Reason for Request:

This alternative will be used to allow the Southern Nuclear Operating Company (SNC) to use the Performance Demonstration Initiative (PDI) Program in lieu of Section XI, Appendix VIII, Supplement 11 requirements for the examination of full structural weld overlays (FSWOL).

For review purposes, a comparison between Supplement 11 of the 2001 Edition of Section XI and the current PDI program is provided.

Proposed Alternative and Basis for Use:

In lieu of the requirements of ASME Section XI, 2001 Edition, Appendix VIII, Supplement 11, the requirements of the PDI Program will be used. Major differences between 2001 Edition Appendix VIII requirements and PDI Program requirements are discussed below.

Paragraph 1.1(d)(1) requires that all base metal flaws be cracks. As illustrated below, implanting a crack requires excavation of the base material on at least one side of the flaw. While this may be satisfactory for ferritic materials, it does not produce a useable axial flaw in austenitic materials because the sound beam, which normally passes only through base material, must now travel through weld material on at least one side, producing an unrealistic flaw response. To resolve this issue, the PDI program revised this paragraph to allow use of alternative flaw mechanisms under controlled conditions. For example, alternative flaws shall be limited to when implantation of cracks precludes obtaining an effective ultrasonic response, flaws shall be semielliptical with a tip width of less than or equal to 0.002 inches, and at least 70% of the flaws in the detection and sizing test shall be cracks and the remainder shall be alternative flaws.

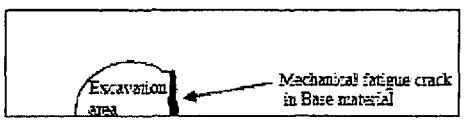

An alternative is requested to allow closer spacing of flaws provided they do not interfere with detection or discrimination. The existing specimens used to date for qualification to the Tri-party (NRC/BWROG/EPRI) agreement have a flaw population density greater than allowed by the current Code requirements. These samples have been used successfully for all previous qualifications under the Tri-party agreement program. To facilitate their use and provide continuity from the Tri-party agreement program to Supplement 11, the PDI Program has merged the Tri-party

test specimens into their weld overlay program. For example: the requirement for using IWA-3300 for proximity flaw evaluation in paragraph 1.1(e)(1) was excluded, instead indications will be sized based on their individual merits; paragraph 1.1(d)(1) includes the statement that intentional overlay fabrication flaws shall not interfere with ultrasonic detection or characterization of the base metal flaws; paragraph 1.1(e)(2)(a)(1) was modified to require that a base metal grading unit include at least 1 inch of the length of the overlaid weld, rather than 3 inches; paragraph 1.1(e)(2)(a)(3) was modified to require sufficient unflawed overlaid weld and base metal to exist on all sides of the grading unit to preclude interfering reflections from adjacent flaws, rather than the 1 inch requirement of Supplement 11; paragraph 1.1(e)(2)(b)(1) was modified to define an overlay fabrication grading unit as including the overlay material and the base metal-to-overlay interface for a length of at least 1 inch, rather than the 6 square inches requirement of Supplement 11; and paragraph 1.1(e)(2)(b)(2) states that overlay fabrication grading units designed to be unflawed shall be separated by unflawed overlay material and unflawed base metal-to-overlay interface for at least 1 inch at both ends, rather than around its entire perimeter.

Additionally, the requirement for axially oriented overlay fabrication flaws in paragraph 1.1(e)(1) was excluded from the PDI Program as an improbable scenario. Weld overlays are typically applied using automated gas tungsten arc welding techniques with the filler metal being applied in a circumferential direction. Because resultant fabrication induced discontinuities would also be expected to have major dimensions oriented in the circumferential direction, axial overlay fabrication flaws are unrealistic.

The PDI Program revised paragraph 2.0 allowing the overlay fabrication and base metal flaw tests to be performed separately. The requirement in paragraph 3.2(b) for reporting all extensions of cracking into the overlay is omitted from the PDI Program because it is redundant to the RMS calculations performed in paragraph 3.2(c) and its presence adds confusion and ambiguity to depth sizing as required by paragraph 3.2(c). This also makes the weld overlay program consistent with the Supplement 2 depth sizing criteria.

In Paragraph 1.1(e)(2)(a)(1) the phrase "and base metal on both sides" was inadvertently included in the description of a base metal grading unit. The PDI program intentionally excludes this requirement because some of the qualification samples include flaws on both sides of the weld.

To avoid confusion, several instances of the term "cracks" or "cracking" were changed to the term "flaws" because of the use of alternative flaw mechanisms. Additionally, to avoid confusion, the overlay thickness tolerance contained in paragraph 1.1(b) last sentence was

mechanisms. Additionally, to avoid confusion, the overlay thickness tolerance contained in paragraph 1.1(b) last sentence was reworded and the phrase "and the remainder shall be alternative flaws" was added to the next to last sentence in paragraph 1.1(d)(1). Additional editorial changes were made to the PDI program to address an earlier NRC RAI.

PDI and the NRC have worked closely to reach agreement on the criteria related to the subject examination requirements and both agree that the PDI program is an acceptable alternative to Appendix VIII, Supplement 11. Compliance with the PDI program will provide an adequate level of quality and safety for examination of the affected welds (i.e., weld overlay repairs). Therefore, pursuant to 10 CFR 50.55a(a)(3)(i), SNC requests approval to use the PDI program, in lieu of the ASME Section XI, Appendix VIII, Supplement 11 requirements.

Duration of Proposed Alternative: The proposed alternative is applicable for the 3rd Inservice Inspection Interval.

Precedents: This request was approved for the 4th Inservice Inspection Interval at SNC Plant Hatch using ISI-ALT-4, Version 1.0.

References: SNC letter dated March 30, 2005, submitting Plant Hatch ISI-ALT-4.

Approval for Plant Hatch ISI-ALT-4 was granted for the 4th ISI interval by NRC letter dated November 9, 2005 - TAC numbers MC6526, MC6530, MC6531, MC6534, MC6535, MC6536, MC6537, MC6538, and MC6539.

Status: Approved by SER dated July 6, 2009, ML 091660654 (TAC No. ME1140 and ME1141.)

Comparison of Supplement 11 of the 2001 Edition of Section XI Versus the PDI Program

SUPPLEMENT 11 OF THE 2001 EDITION OF SECTION XI	PDI PROGRAM
1.0 SPECIMEN REQUIREMENTS	
Qualification test specimens shall meet the requirements listed herein, unless a set of specimens is designed to accommodate specific limitations stated in the scope of the examination procedure (e.g., pipe size, weld joint configuration, access limitations). The same specimens may be used to demonstrate both detection and sizing qualification.	No Change
1.1 **General.** The specimen set shall conform to the following requirements.	No Change
(a) Specimens shall have sufficient volume to minimize spurious reflections that may interfere with the interpretation process.	No Change
(b) The specimen set shall consist of at least three specimens having different nominal pipe diameters and overlay thicknesses. They shall include the minimum and maximum nominal pipe diameters for which the examination procedure is applicable. Pipe diameters within a range of 0.9 to 1.5 times a nominal diameter shall be considered equivalent. If the procedure is applicable to pipe diameters of 24 in. or larger, the specimen set must include at least one specimen 24 in. or larger but need not include the maximum diameter. The specimen set must include at least one specimen with overlay thickness within -0.1 in. to +0.25 in. of the maximum nominal overlay thickness for which the procedure is applicable.	*(b)* The specimen set shall consist of at least three specimens having different nominal pipe diameters and overlay thicknesses. They shall include the minimum and maximum nominal pipe diameters for which the examination procedure is applicable. Pipe diameters within a range of 0.9 to 1.5 times a nominal diameter shall be considered equivalent. If the procedure is applicable to pipe diameters of 24 in. or larger, the specimen set must include at least one specimen 24 in. or larger but need not include the maximum diameter. The specimen set shall include specimens with overlays not thicker than 0.1 in. more than the minimum thickness, nor thinner than 0.25 in. of the maximum nominal overlay thickness for which the examination procedure is applicable.
(c) The surface condition of at least two specimens shall approximate the roughest surface condition for which the	No Change

Comparison of Supplement 11 of the 2001 Edition of Section XI Versus the PDI Program

SUPPLEMENT 11 OF THE 2001 EDITION OF SECTION XI	PDI PROGRAM
examination procedure is applicable.	
(d) Flaw Conditions	
(1) Base metal flaws. All flaws must be cracks in or near the butt weld heat-affected zone, open to the inside surface, and extending at least 75% through the base metal wall. Flaws may extend 100% through the base metal and into the overlay material; in this case, intentional overlay fabrication flaws shall not interfere with ultrasonic detection or characterization of the cracking. Specimens containing IGSCC shall be used when available.	(1) Base metal flaws. All flaws must be in or near the butt weld heat-affected zone, open to the inside surface, and extending at least 75% through the base metal wall. Intentional overlay fabrication flaws shall not interfere with ultrasonic detection or characterization of the base metal flaws. Specimens containing IGSCC shall be used when available. At least 70 percent of the flaws in the detection and sizing tests shall be cracks and the remainder shall be alternative flaws. Alternative flaw mechanisms, if used, shall provide crack-like reflective characteristics and shall be limited by the following: (a) The use of Alternative flaws shall be limited to when the implantation of cracks produces spurious reflectors that are uncharacteristic of actual flaws. (b) Flaws shall be semielliptical with a tip width of less than or equal to 0.002 inches.
(2) Overlay fabrication flaws. At least 40% of the flaws shall be non-crack fabrication flaws (e.g., sidewall lack of fusion or laminar lack of bond) in the overlay or the pipe-to-overlay interface. At least 20% of the flaws shall be cracks. The balance of the flaws shall be of either type.	No Change
(e) Detection Specimens	
(1) At least 20% but less than 40% of the flaws shall be oriented within ±20 deg. of the pipe axial direction. The remainder shall be	(1) At least 20% but less than 40% of the base metal flaws shall be oriented within ±20 deg. of the pipe axial direction. The

Comparison of Supplement 11 of the 2001 Edition of Section XI Versus the PDI Program

SUPPLEMENT 11 OF THE 2001 EDITION OF SECTION XI	PDI PROGRAM
oriented circumferentially. Flaws shall not be open to any surface to which the candidate has physical or visual access. The rules of IWA-3300 shall be used to determine whether closely spaced flaws should be treated as single or multiple flaws.	remainder shall be oriented circumferentially. Flaws shall not be open to any surface to which the candidate has physical or visual access.
(2) Specimens shall be divided into base and over-lay grading units. Each specimen shall contain one or both types of grading units.	(2) Specimens shall be divided into base metal and overlay fabrication grading units. Each specimen shall contain one or both types of grading units. Flaws shall not interfere with ultrasonic detection or characterization of other flaws.
(a)(1) A base grading unit shall include at least 3 in. of the length of the overlaid weld. The base grading unit includes the outer 25% of the overlaid weld and base metal on both sides. The base grading unit shall not include the inner 75% of the overlaid weld and base metal overlay material, or base metal-to-overlay interface.	*(a)(1)* A base metal grading unit includes the overlay material and the outer 25% of the original overlaid weld. The base metal grading unit shall extend circumferentially for at least 1 in. and shall start at the weld centerline and be wide enough in the axial direction to encompass one half of the original weld crown and a minimum of 0.50" of the adjacent base material.
(a)(2) When base metal cracking penetrates into the overlay material, the base grading unit shall include the overlay metal within 1 in. of the crack location. This portion of the overlay material shall not be used as part of any overlay grading unit.	(a)(2) When base metal flaws penetrate into the overlay material, the base metal grading unit shall not be used as part of any overlay fabrication grading unit.
(a)(3) When a base grading unit is designed to be unflawed, at least 1 in. of unflawed overlaid weld and base metal shall exist on either side of the base grading unit. The segment of weld length used in one base grading unit shall not be used in another base grading unit. Base grading units need not be uniformly spaced around the specimen.	(a)(3) Sufficient unflawed overlaid weld and base metal shall exist on all sides of the grading unit to preclude interfering reflections from adjacent flaws.
(b)(1) An overlay grading unit shall include the overlay material and the base metal-to-overlay interface of at least 6 sq. in. The overlay grading unit shall be rectangular, with minimum dimensions of 2 in.	*(b)*(I) An overlay fabrication grading unit shall include the overlay material and the base metal-to-overlay interface for a length of at least 1 in.

Comparison of Supplement 11 of the 2001 Edition of Section XI Versus the PDI Program

SUPPLEMENT 11 OF THE 2001 EDITION OF SECTION XI	PDI PROGRAM
(b)(2) An overlay grading unit designed to be unflawed shall be surrounded by unflawed overlay material and unflawed base metal-to-overlay interface for at least 1 in. around its entire perimeter. The specific area used in one overlay grading unit shall not be used in another overlay grading unit. Overlay grading units need not be spaced uniformly about the specimen.	(b)(2) Overlay fabrication grading units designed to be unflawed shall be separated by unflawed overlay material and unflawed base metal-to-overlay interface for at least 1 in. at both ends. Sufficient unflawed overlaid weld and base metal shall exist on both sides of the overlay fabrication grading unit to preclude interfering reflections from adjacent flaws. The specific area used in one overlay fabrication grading unit shall not be used in another overlay fabrication grading unit. Overlay fabrication grading units need not be spaced uniformly about the specimen.
(b)(3) Detection sets shall be selected from Table VIII-S2-1. The minimum detection sample set is five flawed base grading units, ten unflawed base grading units, five flawed overlay grading units, and ten unflawed overlay grading units. For each type of grading unit, the set shall contain at least twice as many unflawed as flawed grading units.	(b)(3) Detection sets shall be selected from Table VIII-S2-1. The minimum detection sample set is five flawed base metal grading units, ten unflawed base metal grading units, five flawed overlay fabrication grading units, and ten unflawed overlay fabrication grading units. For each type of grading unit, the set shall contain at least twice as many unflawed as flawed grading units. For initial procedure qualification, detection sets shall include the equivalent of three personnel qualification sets. To qualify new values of essential variables, at least one personnel qualification set is required.
(f) Sizing Specimen	
(1) The minimum number of flaws shall be ten. At least 30% of the flaws shall be overlay fabrication flaws. At least 40% of the flaws shall be cracks open to the inside surface.	(1) The minimum number of flaws shall be ten. At least 30% of the flaws shall be overlay fabrication flaws. At least 40% of the flaws shall be open to the inside surface. Sizing sets shall contain a distribution of flaw dimensions to assess sizing capabilities. For initial procedure qualification, sizing sets shall include the equivalent of three personnel qualification sets. To qualify new values of essential variables, at least one personnel qualification set is required.

Comparison of Supplement 11 of the 2001 Edition of Section XI Versus the PDI Program

SUPPLEMENT 11 OF THE 2001 EDITION OF SECTION XI	PDI PROGRAM
(2) At least 20% but less than 40% of the flaws shall be oriented axially. The remainder shall be oriented circumferentially. Flaws shall not be open to any surface to which the candidate has physical or visual access.	No Change
(3) Base metal cracking used for length sizing demonstrations shall be oriented circumferentially.	(3) Base metal flaws used for length sizing demonstrations shall be oriented circumferentially.
(4) Depth sizing specimen sets shall include at least two distinct locations where cracking in the base metal extends into the overlay material by at least 0.1 in. in the through-wall direction.	(4) Depth sizing specimen sets shall include at least two distinct locations where a base metal flaw extends into the overlay material by at least 0.1 in. in the through-wall direction.

Comparison of Supplement 11 of the 2001 Edition of Section XI Versus the PDI Program

SUPPLEMENT 11 OF THE 2001 EDITION OF SECTION XI	PDI PROGRAM
2.0 CONDUCT OF PERFORMANCE DEMONSTRATION	
The specimen inside surface and identification shall be concealed from the candidate. All examinations shall be completed prior to grading the results and presenting the results to the candidate. Divulgence of particular specimen results or candidate viewing of unmasked specimens after the performance demonstration is prohibited.	The specimen inside surface and identification shall be concealed from the candidate. All examinations shall be completed prior to grading the results and presenting the results to the candidate. Divulgence of particular specimen results or candidate viewing of unmasked specimens after the performance demonstration is prohibited. The overlay fabrication flaw test and the base metal flaw test may be performed separately.
2.1 Detection Test.	
Flawed and unflawed grading units shall be randomly mixed. Although the boundaries of specific grading units shall not be revealed to the candidate, the candidate shall be made aware of the type or types of grading units (base or overlay) that are present for each specimen.	Flawed and unflawed grading units shall be randomly mixed. Although the boundaries of specific grading units shall not be revealed to the candidate, the candidate shall be made aware of the type or types of grading units (base metal or overlay fabrication) that are present for each specimen.
2.2 Length Sizing Test	
(a) The length sizing test may be conducted separately or in conjunction with the detection test.	No Change
(b) When the length sizing test is conducted in conjunction with the detection test and the detected flaws do not satisfy the requirements of 1.1(f), additional specimens shall be provided to the candidate. The regions containing a flaw to be sized shall be identified to the candidate. The candidate shall determine the length of the flaw in each region.	No Change
(c) For a separate length sizing test, the regions of each specimen	No Change

Comparison of Supplement 11 of the 2001 Edition of Section XI Versus the PDI Program

SUPPLEMENT 11 OF THE 2001 EDITION OF SECTION XI	PDI PROGRAM
containing a flaw to be sized shall be identified to the candidate. The candidate shall determine the length of the flaw in each region.	
(d) For flaws in base grading units, the candidate shall estimate the length of that part of the flaw that is in the outer 25% of the base wall thickness.	*(d)* For flaws in base metal grading units, the candidate shall estimate the length of that part of the flaw that is in the outer 25% of the base metal wall thickness.
2.3 Depth Sizing Test.	
For the depth sizing test, 80% of the flaws shall be sized at a specific location on the surface of the specimen identified to the candidate. For the remaining flaws, the regions of each specimen containing a flaw to be sized shall be identified to the candidate. The candidate shall determine the maximum depth of the flaw in each region.	(a) The depth sizing test may be conducted separately or in conjunction with the detection test.
	(b) When the depth sizing test is conducted in conjunction with the detection test and the detected flaws do not satisfy the requirements of 1.1(f), additional specimens shall be provided to the candidate. The regions containing a flaw to be sized shall be identified to the candidate. The candidate shall determine the maximum depth of the flaw in each region.
	(c) For a separate depth sizing test, the regions of each specimen containing a flaw to be sized shall be identified to the candidate. The candidate shall determine the maximum depth of the flaw in each region.

Comparison of Supplement 11 of the 2001 Edition of Section XI Versus the PDI Program

SUPPLEMENT 11 OF THE 2001 EDITION OF SECTION XI	PDI PROGRAM
3.0 ACCEPTANCE CRITERIA	
3.1 Detection Acceptance Criteria.	
Examination procedures, equipment, and personnel are qualified for detection when the results of the performance demonstration satisfy the acceptance criteria of Table VIII-S2-1 for both detection and false calls. The criteria shall be satisfied separately by the demonstration results for base grading units and for overlay grading units.	a) Examination procedures are qualified for detection when; 1) All flaws within the scope of the procedure are detected and the results of the performance demonstration satisfy the acceptance criteria of Table VIII-S2-1 for false calls. (a) At least one successful personnel demonstration has been performed meeting the acceptance criteria defined in (b). (b) Examination equipment and personnel are qualified for detection when the results of the performance demonstration satisfy the acceptance criteria of Table VIII-S2-1 for both detection and false calls. (c) The criteria in (a), (b) shall be satisfied separately by the demonstration results for base metal grading units and for overlay fabrication grading units.
3.2 Sizing Acceptance Criteria.	
Examination procedures, equipment, and personnel are qualified for sizing when the results of the performance demonstration satisfy the following criteria.	No Change
(a) The RMS error of the flaw length measurements, as compared to the true flaw lengths, is less than or equal to 0.75 inch. The length of base metal cracking is measured at the 75% through-base-metal position.	*(a)* The RMS error of the flaw length measurements, as compared to the true flaw lengths, is less than or equal to 0.75 inch. The length of base metal flaws is measured at the 75% through-base-metal position.

Comparison of Supplement 11 of the 2001 Edition of Section XI Versus the PDI Program

SUPPLEMENT 11 OF THE 2001 EDITION OF SECTION XI	PDI PROGRAM
(b) All extensions of base metal cracking into the overlay material by at least 0.1 in. are reported as being intrusions into the overlay material.	This requirement is omitted.
(c) The RMS error of the flaw depth measurements, as compared to the true flaw depths, is less than or equal to 0.125 in.	*(b)* The RMS error of the flaw depth measurements, as compared to the true flaw depths, is less than or equal to 0.125 in.

Plant Site-Unit:	Vogtle Electric Generating Plant, Units 1 and 2 (VEGP-1&2).
Interval Dates:	Third ISI Interval – May 31, 2007 through May 30, 2017.
Requested Date for Approval :	Approval is requested by February 26, 2010.
ASME Code Components Affected:	All Class 1 and 2 piping welds – Examination Categories B-F, B-J, C-F-1, and C-F-2.
Applicable Code Edition and Addenda:	The applicable Code edition and addenda is ASME Section XI, "Rules for Inservice Inspection of Nuclear Power Plant components," 2001 Edition with 2003 addenda. In addition, as required by 10 CFR 50.55a, piping ultrasonic examinations are performed per ASME Section XI, 2001 Edition, Appendix VIII, "Performance Demonstration for Ultrasonic Examination Systems."
Applicable Code Requirements:	For the current inservice inspection (ISI) program at VEGP-1&2, IWB-2200 IWB-2420, IWB-2430, and IWB-2500 provide the examination requirements for Category B-F and Category B-J welds. Similarly, IWC-2200, IWC-2420, IWC-2430, and IWC-2500 provide the examination requirements for Category C-F-1 and C-F-2 welds.
Reason for Request:	The objective of this submittal is to request the use of a risk-informed/safety based (RIS_B) ISI process for the inservice inspection of Class 1 and 2 piping.
Proposed Alternative and Basis for Use:	In lieu of the existing Code requirements, Southern Nuclear Operating company (SNC) proposes to use a RIS_B process as an alternate to the current ISI program for Class 1 and 2 piping. The RIS_B process used in this submittal is based upon ASME Code Case N-716, "Alternative Piping Classification and Examination Requirements, Section XI Division 1". Code Case N-716 is founded, in large part, on the risk-informed ISI (RI-ISI) process described in Electric Power Research Institute (EPRI) Topical Report (TR) 112657 Rev. B-A, *Revised Risk-Informed Inservice Inspection Evaluation Procedure*, December 1999 (ADAMS Accession No. ML013470102) which was previously reviewed and approved by the U.S. Nuclear Regulatory Commission (NRC).

	In general, a risk-informed program replaces the number and locations of nondestructive examination (NDE) inspections based on ASME Code, Section XI requirements with the number and locations of these inspections based on the risk-informed guidelines. These processes result in a program consistent with the concept that, by focusing inspections on the most safety-significant welds, the number of inspections can be reduced while at the same time maintaining protection of public health and safety. NRC approved EPRI TR 112657, Rev. B-A includes steps which, when successfully applied, satisfy the guidance provided in Regulatory Guide (RG) 1.174, "An Approach for Using Probabilistic Risk Assessment In Risk-Informed Decisions On Plant-Specific Changes to the Licensing Basis" and RG 1.178, "An Approach For Plant-Specific Risk-Informed Decision Making for Inservice Inspection of Piping". These steps are: Scope definition Consequence evaluation Degradation mechanism evaluation Piping segment definition Risk categorization Inspection/NDE selection Risk impact assessment Implementation monitoring and feedback These same steps were also applied to this RIS_B process and it is concluded that this RIS_B process alternative also meets the intent and principles of Regulatory Guides 1.174 and 1.178. In general, the methodology in Code Case N-716 replaces a detailed evaluation of the safety significance of each pipe segment required by EPRI TR 112657, Rev. B-A with a generic population of high safety-significant segments, followed by a screening flooding analysis to identify any plant-specific high safety-significant segments (Class 1, 2, 3, or Non-Class). The screening flooding analysis was performed in accordance with Regulatory Guide 1.200, Revision 1 and the flooding analysis described in Section 4.5.7 of ASME RA-Sb-2005, Standard for Probabilistic Risk Assessment for Nuclear Power Plant Applications, Addendum B to ASME RA-S-2002. (The screening did not identify any plant-specific high safety-significant segments). By using risk-insights to focus examinations on more important examination locations, while meeting the intent and principles of Regulatory Guides 1.174 and 1.178, this proposed RIS_B will continue to maintain an acceptable level of quality and safety. Additionally, all piping components, regardless of risk classification, will continue to receive ASME Code-required pressure testing, as part of the current ASME Code, Section XI program. Therefore, approval for this alternative to the requirements of IWB-2200, IWB-2420, IWB-2430, and IWB-2500 (Examination Categories B-F and B-J) and IWC-2200, IWC-2420, IWC-2430, and IWC-2500 (Examination Categories C-F-1 and C-F-2) is requested in accordance with 10 CFR 50.55a(a)(3)(i). A detailed Template is

	attached that mirrors previous RIS_B submittals to the NRC.
Duration of Proposed Alternative:	Through May 30, 2017.
Precedents:	Similar alternatives have been approved for Donald C. Cook 1 and 2, Grand Gulf Nuclear Station, and Waterford-3.
References:	D. C. Cook Safety Evaluation - See ADAMS Accession No. ML072620553. Grand Gulf Nuclear Station Safety Evaluation- See ADAMS Accession No. ML072430005. Waterford-3 Safety Evaluation – See ADAMS Accession No. ML080980120.
Status:	Awaiting NRC approval.

TEMPLATE SUBMITTAL

APPLICATION OF ASME CODE CASE N-716

RISK-INFORMED / SAFETY-BASED (RIS_B)
INSERVICE INSPECTION PROGRAM PLAN

Technical Acronyms/Definitions Used in the Template

AC	Alternating Current
AFW	Auxiliary Feedwater
AOV	Air Operated Valve
AOVLOCA	LOCA Isolated by an Air Operated Valve
ARV	Atmospheric Relief Valve
ASME	American Society of Mechanical Engineers
ATWT	Anticipated Transient Without Trip
BER	Break Exclusion Region
BL-PRA	Base Line PRA
CAFTA	Computer-Aided Fault Tree Analysis
CC	Crevice Corrosion
CCDP	Conditional Core Damage Probability
CCF	Common Cause Failure
CCPs	Centrifugal Charging Pumps
CDF	Core Damage Frequency
CIV	Containment Isolation Valve
Class 2 LSS	Class 2 Pipe Break in LSS Piping
CLERP	Conditional Large Early Release Probability
CS	Containment Spray
CST	Condensate Storage Tank
CVCS	Chemical Volume and Control System
DG	Diesel Generator
DM	Degradation Mechanism
E-C	Erosion-Corrosion
ECCS	Emergency core Cooling Systems
ECSCC	External Chloride Stress Corrosion Cracking
EDG	Emergency Diesel Generator
FAC	Flow-Accelerated Corrosion
F&O	Facts and Observations
FT	Fault tree
FW	Feedwater
HEP	Human Error Probability
HFE	Human Failure Event
HRA	Human Reliability Analysis
HSS	High Safety-Significant
HX	Heat Exchanger
IE	Initiating Event
IF	Internal Flooding
IFIV	Inside First Isolation Valve
IGSSC	Intergranular Stress Corrosion Cracking
ILOCA	Isolable Loss of Coolant Accident
IPE	Individual Plant Evaluation
IPLOCA	ILOCA or PLOCA Occurs During Operation/Standby
ISLOCA	Inter-system LOCA
LERF	Large Early Release Frequency
LERF-CFE	LERF - Containment Failure Early

Technical Acronyms/Definitions Used in the Template (Continued)

LERF-ISO	LERF- Isolation Failure
LOCA	Loss Of Coolant Accident
LSS	Low Safety-Significant
MAAP	Modular Accident Analysis Program
MGL	Multiple Greek Letter
MIC	Microbiologically-Influenced Corrosion
MOV	Motor Operated Valve
MR	Maintenance Rule
MS	Main Steam
MSPI	Mitigating Systems Performance Indicator
MV	Manual Valve
MVLOCA	LOCA Isolated by a Manual Valve
NDE	Nondestructive Examination
NNS	Non-Nuclear Safety
NPS	Nominal Pipe Size
NSCW	Nuclear Service Cooling Water
OA	Operator Action
OC	Outside Containment
PBF	Pressure Boundary Failure
PIT	Pitting
PLOCA	Potential Loss of Coolant Accident
PLOCASD	Potential LOCA in SDC Suction Piping
PLOCASD2	PLOCASD Between the Second MOV and the Containment Penetration
POD	Probability of Detection
PORV	Power Operated Relief Valve
PPLOCA	Potential LOCA in Class 2 Piping Requiring Failure of Two Check Valves in Series
PRA	Probabilistic Risk Assessment
PSA	Probabilistic Safety Assessment
PSF	Performance Shaping Factor
PWR: FW	Pressurized Water Reactor: Feedwater
PWROG	Pressurized Water Reactor Owner's Group
PWSCC	Primary Water SCC
PZR	Pressurizer
RWST	Refueling Water Storage Tank
RC	Reactor Coolant
RCP	Reactor Coolant Pump
RCPB	Reactor Coolant Pressure Boundary
RHR	Residual Heat Removal
RI-BER	Risk-Informed Break Exclusion Region
RI-ISI	Risk-Informed Inservice Inspection
RIS_B	Risk-Informed/Safety Based Inservice Inspection
RM	Risk Management
RPV	Reactor Pressure Vessel
SAIC	Science Applications International Corporation
SAMA	Severe Accident Management Alternatives
SBO	Station Blackout
SDC	Shutdown Cooling

Technical Acronyms/Definitions Used in the Template (Continued)

SG	Steam Generator
SGTR	Steam Generator Tube Rupture
SIP	Safety Injection Pump
SSBI	Main Steam or Feedwater Break inside the Outer CIV
SSBO	Main Steam or Feedwater Break Beyond the Outer CIV
SSC	Systems, Structures, and Components
SI	Safety Injection
Sur	Surface
SV	Safety Valve
SXI	Section XI
TASCS	Thermal Stratification, Cycling, and Striping
TGSCC	Transgranular Stress Corrosion Cracking
TR	Technical Report
TT	Thermal Transients
Vol	Volumetric
WOG	Westinghouse Owner's Group

Table of Contents

1. Introduction
   1.1 Relation to NRC Regulatory Guides 1.174 and 1.178
   1.2 PRA Quality
2. Proposed Alternative to Current Inservice Inspection Programs
   2.1 ASME Section XI
   2.2 Augmented Programs
3. Risk-Informed / Safety-Based ISI Process
   3.1 Safety Significance Determination
   3.2 Failure Potential Assessment
   3.3 Element and NDE Selection
      3.3.1 Current Examinations
      3.3.2 Successive Examinations
      3.3.3 Scope Expansion
      3.3.4 Program Relief Requests
   3.4 Risk Impact Assessment
      3.4.1 Quantitative Analysis
      3.4.2 Defense-in-Depth
   3.5 Implementation
   3.6 Feedback (Monitoring)
4. Proposed ISI Plan Change
5. References/Documentation

Attachment A – VEGP PRA Quality Review

1. INTRODUCTION

Vogtle Electric Generating Plant Units 1 and 2 (VEGP 1&2) is currently in the third inservice inspection (ISI) interval as defined by the American Society of Mechanical Engineers (ASME) Boiler and Pressure Vessel Section XI Code for Inspection Program B. VEGP 1&2 plans to implement a risk-informed/safety-based inservice inspection (RIS_B) program in the first inspection period of the third ISI interval. The third interval commenced in May 31, 2007 for VEGP Units 1 and 2.

The ASME Section XI code of record for the third ISI interval at VEGP is the 2001 Edition with 2003 Addenda for Examination Category B-F, B-J, C-F-1, and C-F-2 Class 1 and 2 piping components.

The RIS_B process used in this submittal is based upon ASME Code Case N-716, *Alternative Piping Classification and Examination Requirements, Section XI Division 1*, which is founded in large part on the RIS_B process as described in Electric Power Research Institute (EPRI) Topical Report (TR) 112657 Rev. B-A, *Revised Risk-Informed Inservice Inspection Evaluation Procedure*.

1.1 Relation to NRC Regulatory Guides 1.174 and 1.178

As a risk-informed application, this submittal meets the intent and principles of Regulatory Guide 1.174, *An Approach for Using Probabilistic Risk Assessment in Risk-Informed Decisions On Plant-Specific Changes to the Licensing Basis*," and Regulatory Guide 1.178, *An Approach for Plant-Specific Risk-Informed Decisionmaking Inservice Inspection of Piping*. Additional information is provided in Section 3.4.2 relative to defense-in-depth.

1.2 Probabilistic Safety Assessment (PSA) Quality

The VEGP PRA has been demonstrated to be adequate for this application. The history and development of the PRA is described in further detail in Attachment A. As described in Attachment A, a complete re-analysis of internal flooding events has been completed to the ASME Standard and Regulatory Guide 1.200, Revision 1. In addition, the internal flooding PRA was reviewed by an independent contractor to confirm compliance with these standards. The PRA, as a whole, has undergone several updates to maintain the model current with the plant design and operation. All Westinghouse Owner's Group (WOG) peer review "B" findings from a peer review conducted in 2001 (there were no "A" findings for the VEGP PRA) were addressed in the Revision 3 PRA model. The Revision 3 model was reviewed by internal reviewers. Additionally, as a part of the mitigating system performance indicator (MSPI) scoping and implementation, the Revision 3 model was partially reviewed by selected NRC region staff, as well as industry peers. A gap analysis of the Revision 3 model versus the ASME Standard and Regulatory Guide 1.200 was performed by an external contractor. The evaluation of the gaps, applicable to this submittal, are included in Attachment A.

The PRA model for internal events (except internal flooding) used for the RIS_B evaluation was the Vogtle PRA L2UP model. The Vogtle PRA L2UP model includes an upgraded level 1 internal event PRA model and a level 2 PRA model. The

upgraded level 1 PRA model included in the VEGP L2UP model was based on the VEGP Level 1 PRA model Revision 3. The upgraded level 2 PRA model included in the L2UP model was based on new PWROG methodology (WCAP-16341-P), which was intended to develop an ASME PRA standard Capability Category II level 2 PRA model. The Vogtle PRA L2UP model was used for the Vogtle Severe Accident Management Alternatives (SAMA) Analysis for the VEGP license renewal submitted in 2007.

2. PROPOSED ALTERNATIVE TO CURRENT ISI PROGRAMS

2.1 ASME Section XI

ASME Section XI Examination Categories B-F, B-J, C-F-1, and C-F-2 currently contain requirements for the nondestructive examination (NDE) of Class 1 and 2 piping components.

The alternative RIS_B Program for piping is described in Code Case N-716. The RIS_B Program will be substituted for the current program for Class 1 and 2 piping (Examination Categories B-F, B-J, C-F-1 and C-F-2) in accordance with 10 CFR 50.55a(a)(3)(i) by alternatively providing an acceptable level of quality and safety. Other non-related portions of the ASME Section XI Code will be unaffected.

2.2 Augmented Programs

The impact of the RIS_B application on the various plant augmented inspection programs listed below were considered. This section documents only those plant augmented inspection programs that address common piping with the RIS_B application scope (e.g., Class 1 and 2 piping).

- The plant augmented inspection program for high-energy line breaks outside containment, implemented in accordance with VEGP Final Safety Analysis Report (FSAR) Section 6.6 and Technical Specification 5.5.16, has not been revised in accordance with the risk-informed break exclusion region methodology (RI-BER) described in EPRI Report 1006937, *Extension of EPRI Risk Informed ISI Methodology to Break Exclusion Region Programs*. Therefore, 100% of these welds will continue to be examined per the VEGP Final Safety Analysis Report (FSAR) Section 6.6 and Technical Specification 5.5.16 requirements. It is the intention of Vogtle to implement the RI-BER program later during the third ISI interval.

- A plant augmented inspection program has been implemented at VEGP in response to NRC Bulletin 88-08, *Thermal Stresses in Piping Connected to Reactor Coolant Systems*. This program was updated in response to MRP-146, *Materials Reliability Program: Management of Thermal Fatigue in Normally Stagnant Non-Isolable Reactor Coolant System Branch Lines*. The thermal fatigue concern addressed was explicitly considered in the application of the RIS_B process and is subsumed by the RIS_B Program.

- The plant augmented inspection program for flow accelerated corrosion (FAC) per GL 89-08, *Erosion/Corrosion-Induced Pipe Wall Thinning*, is relied upon to manage

this damage mechanism but is not otherwise affected or changed by the RIS_B Program.

- Since the issuance of the NRC safety evaluation for EPRI TR 112657, Rev. B-A, several instances of primary water stress corrosion cracking of Alloy 82/182 welds has occurred at pressurized water reactors. For examination of these welds, a plant augmented inspection program is already being implemented at VEGP in response to MRP-139, *Materials Reliability Program: Primary System Piping Butt Weld Inspection and Evaluation Guidelines*. The requirements of MRP-139 are used for the inspection and management of Primary Water Stress Corrosion Cracking (PWSCC) susceptible welds and will supplement the RIS_B Program selection process. The RIS_B Program will not be used to eliminate any MRP-139 requirements.

3. RISK-INFORMED/SAFETY-BASED ISI PROCESS

The process used to develop the RIS_B Program conformed to the methodology described in Code Case N-716 and consisted of the following steps:

- Safety Significance Determination (see Section 3.1)
- Failure Potential Assessment (see Section 3.2)
- Element and NDE Selection (see Section 3.3)
- Risk Impact Assessment (see Section 3.4)
- Implementation Program (see Section 3.5)
- Feedback Loop (see Section 3.6)

Each of these six steps is discussed below:

3.1 Safety Significance Determination

The systems assessed in the RIS_B Program are provided in Table 3.1a (Unit 1) and Table 3.1.b (Unit 2). The piping and instrumentation diagrams and additional plant information, including the existing plant ISI Program were used to define the piping system boundaries. Per Code Case N-716 requirements, piping welds are assigned safety-significance categories, which are then used to determine the examination treatment requirements. High safety-significant (HSS) welds are determined in accordance with the requirements below. Low safety-significant (LSS) welds include all other Class 2, 3, or Non-Class welds.

(1) Class 1 portions of the reactor coolant pressure boundary (RCPB), except as provided in 10 CFR 50.55a(c)(2)(i) and (c)(2)(ii);

(2) Applicable portions of the shutdown cooling pressure boundary function. That is, Class 1 and 2 welds of systems or portions of systems needed to utilize the normal shutdown cooling flow path either:

(a) As part of the RCPB from the reactor pressure vessel (RPV) to the second isolation valve (i.e., farthest from the RPV) capable of remote closure or to the containment penetration, whichever encompasses the larger number of welds; or

(b) Other systems or portions of systems from the RPV to the second isolation valve (i.e., farthest from the RPV) capable of remote closure or to the containment penetration, whichever encompasses the larger number of welds;

(3) That portion of the Class 2 feedwater system [> 4 inch nominal pipe size (NPS)] of pressurized water reactors (PWRs) from the steam generator to the outer containment isolation valve;

(4) Piping within the break exclusion region (BER) greater than 4" NPS for high-energy piping systems as defined by the Owner. Per Code Case N-716, this may include Class 3 or Non-Class piping, but all BER piping at VEGP is Class 2.

(5) Any piping segment whose contribution to Core Damage Frequency (CDF) is greater than 1E-06 [and per NRC feedback on the Grand Gulf and D. C. Cook RIS_B applications 1E-07 for Large Early Release Frequency (LERF)] based upon a plant-specific PSA of pressure boundary failures (e.g., pipe whip, jet impingement, spray, inventory losses). This may include Class 3 or Non-Class piping. No piping segments with a contribution to CDF greater than 1E-06 (1E-07 for LERF) were identified.

3.2 Failure Potential Assessment

Failure potential estimates were generated utilizing industry failure history, plant-specific failure history, and other relevant information. These failure estimates were determined using the guidance provided in NRC approved EPRI TR-112657 (i.e., the EPRI RIS_B methodology), with the exception of the deviation discussed below.

Table 3.2 summarizes the failure potential assessment by system for each degradation mechanism that was identified as potentially operative.

A deviation to the EPRI RIS_B methodology has been implemented in the failure potential assessment for VEGP. Table 3-16 of EPRI TR-112657 contains the following criteria for assessing the potential for Thermal Stratification, Cycling, and Striping (TASCS). Key attributes for horizontal or slightly sloped piping greater than NPS 1 include:

1. The potential exists for low flow in a pipe section connected to a component allowing mixing of hot and cold fluids; or

2. The potential exists for leakage flow past a valve, including in-leakage, out-leakage and cross-leakage allowing mixing of hot and cold fluids; or

3. The potential exists for convective heating in dead-ended pipe sections connected to a source of hot fluid; or

4. The potential exists for two phase (steam/water) flow; or

5. The potential exists for turbulent penetration into a relatively colder branch pipe connected to header piping containing hot fluid with turbulent flow;

   AND

   ➢ΔT > 50°F,

   AND

   ➢Richardson Number > 4 (this value predicts the potential buoyancy of a stratified flow)

These criteria, based on meeting a high cycle fatigue endurance limit with the actual ΔT assumed equal to the greatest potential ΔT for the transient, will identify locations where stratification is likely to occur, but allows for no assessment of severity. As such, many locations will be identified as subject to TASCS, where no significant potential for thermal fatigue exists. The critical attribute missing from the existing methodology, that would allow consideration of fatigue severity, is a criterion that addresses the potential for fluid cycling. The impact of this additional consideration on the existing TASCS susceptibility criteria is presented below.

➢ **Turbulent Penetration TASCS**

Turbulent penetration is a swirling vertical flow structure in a branch line induced by high velocity flow in the connected piping. It typically occurs in lines connected to piping containing hot flowing fluid. In the case of downward sloping lines that then turn horizontal, significant top-to-bottom cyclic ΔTs can develop in the horizontal sections if the horizontal section is less than about 25 pipe diameters from the reactor coolant piping. Therefore, TASCS is considered for this configuration.

For upward sloping branch lines connected to the hot fluid source that turn horizontal or in horizontal branch lines, natural convective effects combined with effects of turbulence penetration will tend to keep the line filled with hot water. If there is in-leakage of cold water, a cold stratified layer of water may be formed and significant top-to-bottom ΔTs may occur in the horizontal portion of the branch line. Interaction with the swirling motion from turbulent penetration may cause a periodic axial motion of the cold layer. Therefore, TASCS is considered for these configurations.

For similar upward sloping branch lines, if there is no potential for in-leakage, this will result in a well-mixed fluid condition where significant top-to-bottom ΔTs will not occur. Therefore, TASCS is not considered for these no in-leakage configurations. Even in fairly long lines, where some heat loss from the outside

of the piping will tend to occur and some fluid stratification may be present, there is no significant potential for cycling as has been observed for the in-leakage case. The effect of TASCS will not be significant under these conditions and can be neglected.

- **Low flow TASCS**

  In some situations, the transient startup of a system (e.g., shutdown cooling suction piping) creates the potential for fluid stratification as flow is established. In cases where no cold fluid source exists, the hot flowing fluid will fairly rapidly displace the cold fluid in stagnant lines, while fluid mixing will occur in the piping further removed from the hot source and stratified conditions will exist only briefly as the line fills with hot fluid. As such, since the situation is transient in nature, it can be assumed that the criteria for thermal transients (TT) will govern.

- **Valve leakage TASCS**

  Sometimes a very small leakage flow of hot water can occur outward past a valve into a line that is relatively colder, creating a significant temperature difference. However, since this is generally a "steady-state" phenomenon with no potential for cyclic temperature changes, the effect of TASCS is not significant and can be neglected.

- **Convection Heating TASCS**

  Similarly, there sometimes exists the potential for heat transfer across a valve to an isolated section beyond the valve, resulting in fluid stratification due to natural convection. However, since there is no potential for cyclic temperature changes in this case, the effect of TASCS is not significant and can be neglected.

In summary, these additional considerations for determining the potential for thermal fatigue as a result of the effects of TASCS provide an allowance for considering cycle severity. Consideration of cycle severity was used in previous NRC approved RIS_B program submittals for D. C. Cook, Grand Gulf Nuclear Station, and Waterford-3. The methodology used in the VEGP RIS_B application for assessing TASCS potential conforms to these updated criteria. Additionally, materials reliability program (MRP) MRP-146 guidance on the subject of TASCS was also incorporated into the VEGP RIS_B application. It should be noted that the NRC has granted approval for RIS_B relief requests incorporating these TASCS criteria at several facilities, including Comanche Peak (NRC letter dated September 28, 2001) and South Texas Project (NRC letter dated March 5, 2002).

3.3 Element and NDE Selection

Code Case N-716 and lessons learned from the Grand Gulf and DC Cook RIS_B applications provided criteria for identifying the number and location of required examinations. Ten percent of the HSS welds shall be selected for examination as follows:

(1) Examinations shall be prorated equally among systems to the extent practical, and each system shall individually meet the following requirements:

(a) A minimum of 25% of the population identified as susceptible to each degradation mechanism and degradation mechanism combination shall be selected.

(b) If the examinations selected above exceed 10% of the total number of HSS welds, the examinations may be reduced by prorating among each degradation mechanism and degradation mechanism combination, to the extent practical, such that at least 10% of the HSS population is inspected.

(c) If the examinations selected above are not at least 10% of the HSS weld population, additional welds shall be selected so that the total number selected for examination is at least 10%.

(2) At least 10% of the RCPB welds shall be selected.

(3) For the RCPB, at least two-thirds of the examinations shall be located between the inside first isolation valve (IFIV) (i.e., isolation valve closest to the RPV) and the RPV.

(4) A minimum of 10% of the welds in that portion of the RCPB that lies outside containment (not applicable for Vogtle) shall be selected.

(5) A minimum of 10% of the welds within the break exclusion region (BER) shall be selected.

Currently, there are seventy-nine BER program welds at Vogtle 1 and eighty-four BER welds at Vogtle 2. A RI-BER program has not been implemented, so 100% of the population is currently being inspected.

In contrast to a number of RI-ISI program applications, where the percentage of Class 1 piping locations selected for examination has fallen substantially below 10%, Code Case N-716 mandates that 10% of the HSS welds be chosen. A brief summary is provided below, and the results of the selections are presented in Table 3.3a (Unit 1) and Table 3.3b (Unit 2). Section 4 of EPRI TR-112657 was used as guidance in determining the examination requirements for these locations.

Unit	Class 1 Welds(1)		Class 2 Welds(2)		NNS Welds(3)		All Piping Welds(4)	
	Total	Selected	Total	Selected	Total	Selected	Total	Selected
1	902	102	1,997	34	0	0	2,899	136
2	948	106	1,916	35	0	0	2,864	141

Notes:
(1) Includes all Category B-F and B-J locations. All Class 1 piping weld locations are HSS.
(2) Includes all Category C-F-1 and C-F-2 locations. Of the Class 2 piping weld locations, 413 are HSS at Unit 1 and 418 are HSS at Unit 2; the remaining are LSS.
(3) There are no HSS Class 3 or non-nuclear safety (NNS) piping weld locations.
(4) Regardless of safety significance, Class 1, 2, and 3 ASME Section XI in-scope piping components will continue to be pressure tested as required by the ASME Section XI Program. VT-2 visual examinations are scheduled in accordance with the pressure test program that remains unaffected by the RIS_B Program.

3.3.1 Current Examinations

VEGP 1&2 is currently using the traditional ASME Section XI inspection methodology for ISI examination of piping welds. However, in anticipation of the approval of this RIS_B submittal, welds being examined using the traditional Section XI methodology also meets the examination requirements of Table 1 of Code Case N-716. Therefore, after approval of the RIS_B submittal, those welds that have already been examined during the 3rd Interval that are selected by the RIS_B process, will be credited toward the RIS_B requirements.

3.3.2 Successive Examinations

If indications are detected during RIS_B ultrasonic examinations, they will be evaluated per IWB-3514 (Class 1) or IWC-3514 (Class 2) to determine their acceptability. Any unacceptable flaw will be evaluated per the requirements of either ASME Code Section XI, IWB-3600 or IWC-3600, as appropriate. As part of this evaluation, the degradation mechanism that is responsible for the flaw will be determined and accounted for in the evaluation. If the flaw is acceptable for continued service, successive examinations will be scheduled per Section 6 of Code Case N-716. If the flaw is found unacceptable for continued operation, it will be repaired in accordance with IWA-4000, applicable ASME Section XI Code Cases, or NRC approved alternatives. The IWB-3600 analytical evaluation will be submitted to the NRC. Finally, the evaluation will be documented in the corrective action program and the Owner submittals required by Section XI.

3.3.3 Scope Expansion

If the nature and type of the flaw is service-induced, then welds subject to the same type of postulated degradation mechanism will be selected and examined per Section 6 of Code Case N-716. The evaluation will include

whether other elements in the segment or additional segments are subject to the same root cause conditions. Additional examinations will be performed on those elements with the same root cause conditions or degradation mechanisms. The additional examinations will include HSS elements up to a number equivalent to the number of elements required to be inspected during the current outage. If unacceptable flaws or relevant conditions are again found similar to the initial problem, the remaining elements identified as susceptible will be examined during the current outage. No additional examinations need be performed if there are no additional elements identified as being susceptible to the same root cause conditions. The need for extensive root cause analysis beyond that required for the IWB-3600 analytical evaluation will be dependent on practical considerations (i.e., the practicality of performing additional NDE or removing the flaw for further evaluation during the outage).

3.3.4 Program Relief Requests

Consistent with previously approved RIS_B submittals, SNC will calculate coverage and use additional examinations or techniques in the same manner it has for traditional Section XI examinations. Experience has shown this process to be weld-specific (e.g., joint configuration). As such, the effect on risk, if any, will not be known until the examinations are performed. Relief requests for those cases where greater than 90% coverage is not obtained will be submitted per the guidance of 10 CFR 50.55a(g)(5)(iv) within one (1) year after the end of the interval

No VEGP relief requests are being withdrawn due to the RIS_B application.

3.4 Risk Impact Assessment

The RIS_B Program development has been conducted in accordance with Regulatory Guide 1.174 and the requirements of Code Case N-716, and the risk from implementation of this program is expected to remain neutral or decrease when compared to that estimated from current requirements.

This evaluation categorized segments as high safety significant or low safety significant in accordance with Code Case N-716, and then determined what inspection changes were proposed for each system. The changes included changing the number and location of inspections, and in many cases improving the effectiveness of the inspection to account for the findings of the RIS_B degradation mechanism assessment. For example, examinations of locations subject to thermal fatigue will be conducted on an expanded volume and will be focused to enhance the probability of detection (POD) during the inspection process.

3.4.1 Quantitative Analysis

Code Case N-716 has adopted the NRC approved EPRI TR-112657 process for risk impact analyses, whereby limits are imposed to ensure that the change in risk of implementing the RIS_B Program meets the requirements of Regulatory Guides 1.174 and 1.178. Section 3.7.2 of EPRI TR-112657

requires that the cumulative change in CDF and LERF be less than 1E-07 and 1E-08 per year per system, respectively.

For LSS welds, Conditional Core Damage Probability (CCDP)/Conditional Large Early Release Probability (CLERP) values of 1E-4/1E-5 were conservatively used. The rationale for using these values is that the change-in-risk evaluation process of N-716 is similar to that of the EPRI RI-ISI methodology. As such, the goal is to determine CCDPs/CLERPs threshold values. For example, the threshold values between High and Medium consequence categories is 1E-4 (CCDP)/1E-5 (CLERP) and between Medium and Low consequence categories are 1E-6 (CCDP)/1E-7 (CLERP) from the EPRI RI-ISI Risk Matrix. Using these threshold values streamlines the change-in-risk evaluation as well as stabilizes the update process. For example, if a CCDP changes from 1E-5 to 3E-5 due to an update, it will remain below the 1E-4 threshold value; the change-in-risk evaluation would not require updating.

The updated internal flooding PRA was also reviewed to ensure that there is no Class 2 piping with a CCDP/CLERP greater than 1E-4/1E-5.

With respect to assigning failure potentials for LSS piping, the criteria are defined in Table 3 of the Code Case. That is, those locations identified as susceptible to FAC are assigned a high failure potential. Those locations susceptible to thermal fatigue, erosion-cavitation, corrosion, or stress corrosion cracking are assigned a medium failure potential, unless they have an identified potential for water hammer loads. In such cases, they will be assigned a high failure potential. Finally, those locations that are identified as not susceptible to degradation are assigned a low failure potential.

In order to streamline the risk impact assessment, a review was conducted that verified the LSS piping was not susceptible to water hammer. LSS piping may be susceptible to FAC; however, the examination for FAC is performed per the FAC program. This review was conducted similar to that done for a traditional RI-ISI application. Thus, the high failure potential category is not applicable to LSS piping. In lieu of conducting a formal degradation mechanism evaluation for all LSS piping (e.g. to determine if thermal fatigue is applicable), these locations were conservatively assigned to the Medium failure potential ("Assume Medium" in Table 3.4-1a and Table 3.4-1b) for use in the change-in-risk assessment. Experience with previous industry RI-ISI applications shows this to be conservative.

VEGP has conducted a risk impact analysis per the requirements of Section 5 of Code Case N-716 that is consistent with the "Simplified Risk Quantification Method" described in Section 3.7 of EPRI TR-112657. The analysis estimates the net change in risk due to the positive and negative influences of adding and removing locations from the inspection program.

The CCDP and CLERP values used to assess risk impact were estimated based on pipe break location. Based on these estimated values, a corresponding consequence rank was assigned per the requirements of EPRI TR-112657 and upper bound threshold values were used as provided in the

table below. Consistent with the EPRI RI-ISI methodology, the upper bound for all break locations that fall within the high consequence rank range was based on the highest CCDP value obtained (e.g., Large LOCA CCDP bounds the medium and small LOCA CCDPs for VEGP).

CCDP and CLERP Values Based on Break Location					
Break Location Designation	Estimated		Consequence Rank	Upper Bound	
	CCDP	CLERP		CCDP	CLERP
LOCA	2E-02	2E-03	HIGH	2E-02	2E-03
A LOCA is a RCPB pipe break that results in a loss of coolant accident – The highest CCDP for a Large LOCA was used (0.1 margin was used for CLERP)					
ILOCA[1][2]	2E-05	2E-06	MEDIUM	1E-04	1E-05
An ILOCA is a pipe break that results in an isolable LOCA – Calculated based on Large LOCA CCDP of 2E-2 and a valve fail to close probability of ~1E-3 (0.1 margin used for CLERP)					
PLOCA[1][2]	2E-05	2E-06	MEDIUM	1E-04	1E-05
A PLOCA is a RCPB pipe break that results in a potential LOCA – Calculated based on Large LOCA CCDP of 2E-2 and a valve rupture probability of ~1E-3 (0.1 margin used for CLERP)					
PLOCASD[1][3]	2E-05	2E-06	MEDIUM	1E-04	1E-05
A PLOCASD is a RCPB pipe break that occurs in shutdown cooling suction piping resulting in a potential LOCA at power and an isolable LOCA during shutdown. LOCA CCDP and MOV failure on demand is judged to be appropriate for lines inside containment (0.1 margin used for CLERP)					
AOVLOCA[1]	4E-08	4E-07	MEDIUM	1E-04	1E-05
An AOVLOCA is a RCPB pipe break that results in an isolable LOCA with an air operated valve (AOV) – Calculated based on Large LOCA CCDP of 2E-2 and AOV fail to close probability of ~2E-4 (0.1 margin used for CLERP)					
MVLOCA[1]	4E-08	4E-07	MEDIUM	1E-04	1E-05
A MVLOCA is a RCPB pipe break that results in a potential LOCA with a manual valve (MV) – Calculated based on Large LOCA CCDP of 2E-2 and valve rupture probability of ~2E-4 (0.1 margin used for CLERP)					
SSBI	3E-05	3E-06	MEDIUM	1E-04	1E-05
An SSBI is a main steam or feedwater break inside the outer containment isolation valve – obtained from PRA (0.1 margin used for CLERP)					
SSBO	2E-06	2E-07	MEDIUM	1E-04	1E-05
An SSBO is a main steam or feedwater break beyond the outer containment isolation valve outside containment – obtained from PRA (0.1 margin used for CLERP)					
PPLOCA[3]	<1E-06	<1E-07	MEDIUM	1E-04	1E-05
A PPLOCA is a potential LOCA in Class 2 piping that requires two check valves in series to cause a rupture – based on Large LOCA CCDP of 2E-2 and 2 valve ruptures <1E-6 (0.1 margin used for CLERP). Medium was assumed rather than low because these lines support multiple cold leg injection paths.					
Class 2 LSS	1E-04	1E-05	MEDIUM	1E-04	1E-05
Class 2 LSS - Class 2 pipe breaks that occur in the remaining system piping designated as low safety significant – Estimated based on upper bound for Medium Consequence					

Notes
1. The VEGP PRA does not explicitly model potential and isolable LOCA events, because such events are subsumed by the LOCA initiators in the PRA. That is,

the frequency of a LOCA in this limited piping downstream of the first RCPB isolation valve times the probability that the valve fails is a small contributor to the total LOCA frequency. The N-716 methodology must evaluate these segments individually; thus, it is necessary to estimate their contribution. This is estimated by taking the LOCA CCDP and multiplying it by the valve failure probability.

2. IPLOCA is used as a designator when the pipe break can occur during system operation or standby.

3. PLOCASD2 is used for piping beyond second MOV on the SDC hot leg suction lines between the valve and the containment penetration. The same CCDP and CLERP are used.

The likelihood of pressure boundary failure (PBF) is determined by the presence of different degradation mechanisms and the rank is based on the relative failure probability. The basic likelihood of PBF for a piping location with no degradation mechanism present is given as x_0 and is expected to have a value less than 1E-08. Piping locations identified as medium failure potential have a likelihood of $20x_0$. These PBF likelihoods are consistent with References 9 and 14 of EPRI TR-112657. In addition, the analysis was performed both with and without taking credit for enhanced inspection effectiveness due to an increased POD from application of the RIS_B approach.

Table 3.4-1a (Unit 1) and Table 3.4-1b (Unit 2) presents a summary of the RIS_B Program versus the 1989 ASME Section XI Code Edition program requirements on a "per system" basis for the second interval. The presence of FAC was adjusted for in the quantitative analysis by excluding its impact on the failure potential rank. The exclusion of the impact of FAC on the failure potential rank and therefore in the determination of the change in risk was performed, because FAC is a damage mechanism managed by a separate, independent plant augmented inspection program. The RIS_B Program credits and relies upon this plant augmented inspection program to manage this damage mechanism. The plant FAC program will continue to determine where and when examinations shall be performed. Hence, since the number of FAC examination locations remains the same "before" and "after" (the implementation of the RIS_B program) and no delta exists, there is no need to include the impact of FAC in the performance of the risk impact analysis.

As indicated in the following tables, this evaluation has demonstrated that unacceptable risk impacts will not occur from implementation of the RIS_B Program, and that the acceptance criteria of Regulatory Guide 1.174 and Code Case N-716 are satisfied.

VEGP Unit 1 Risk Impact Summary				
System	With POD Credit		Without POD Credit	
	Delta CDF	Delta LERF	Delta CDF	Delta LERF
Auxiliary Feedwater	-2.75E-10	-2.75E-11	-9.85E-11	-9.85E-12
Chemical & Volume Control	-7.43E-09	-7.43E-10	-4.21E-09	-4.21E-10
Main Feedwater	5.00E-11	5.00E-12	9.00E-11	9.00E-12
Main Steam	8.95E-11	8.95E-12	8.95E-11	8.95E-12
Reactor Coolant	-5.14E-08	-5.14E-09	-9.00E-09	-9.00E-10
Residual Heat Removal	3.69E-10	3.69E-11	3.69E-10	3.69E-11
Safety Injection	-4.32E-08	-4.32E-09	-2.40E-08	-2.40E-09
Containment Spray	1.90E-10	1.90E-11	1.90E-10	1.90E-11
Total	-1.02E-07	-1.02E-08	-3.66E-08	-3.66E-09

VEGP Unit 2 Risk Impact Summary				
System	With POD Credit		Without POD Credit	
	Delta CDF	Delta LERF	Delta CDF	Delta LERF
Auxiliary Feedwater	-2.64E-10	-2.64E-11	-5.95E-11	-5.95E-12
Chemical & Volume Control	-7.43E-09	-7.43E-10	-4.21E-09	-4.21E-10
Main Feedwater	7.50E-12	7.50E-13	3.95E-11	3.95E-12
Main Steam	9.95E-11	9.95E-12	9.95E-11	9.95E-12
Reactor Coolant	-3.45E-08	-3.45E-09	2.30E-09	2.30E-10
Residual Heat Removal	2.79E-10	2.79E-11	2.79E-10	2.79E-11
Safety Injection	-4.35E-08	-4.35E-09	-2.43E-08	-2.43E-09
Containment Spray	1.70E-10	1.70E-11	1.70E-10	1.70E-11
Total	-8.52E-08	-8.52E-09	-2.57E-08	-2.57E-09

3.4.2 Defense-in-Depth

The intent of the inspections mandated by 10 CFR 50.55a for piping welds is to identify conditions such as flaws or indications that may be precursors to leaks or ruptures in a system's pressure boundary. Currently, the process for selecting inspection locations is based upon terminal end locations, structural discontinuities, and stress analysis results. As depicted in ASME White Paper 92-01-01 Rev. 1, *Evaluation of Inservice Inspection Requirements for Class 1, Category B-J Pressure Retaining Welds*, this method has been ineffective in identifying leaks or failures. EPRI TR-112657 and Code Case N-716 provide a more robust selection process founded on actual service experience with nuclear plant piping failure data.

This process has two key independent ingredients; that is, a determination of each location's susceptibility to degradation and secondly, an independent assessment of the consequence of the piping failure. These two ingredients assure defense-in-depth is maintained. First, by evaluating a location's

susceptibility to degradation, the likelihood of finding flaws or indications that may be precursors to leak or ruptures is increased. Secondly, a generic assessment of high-consequence sites has been determined by Code Case N-716, supplemented by plant-specific evaluations, thereby requiring a minimum threshold of inspection for important piping whose failure would result in a LOCA or BER break. Finally, Code Case N-716 requires that any piping on a plant-specific basis that has a contribution to CDF of greater than 1E-06 (or 1E-07 for LERF) be included in the scope of the application. VEGP did not identify any such piping.

All locations within the Class 1, 2, and 3 pressure boundaries will continue to be pressure tested in accordance with the Code, regardless of its safety significance.

3.5 Implementation

Upon approval of the RIS_B Program, procedures that comply with the guidelines described in Code Case N-716 will be prepared to implement and monitor the program. The new program will be implemented during the third ISI interval. No changes to the Technical Specifications or Updated Final Safety Analysis Report are necessary for program implementation.

The applicable aspects of the ASME Code not affected by this change will be retained, such as inspection methods, acceptance guidelines, pressure testing, corrective measures, documentation requirements, and quality control requirements. Existing ASME Section XI program implementing procedures will be retained and modified to address the RIS_B process, as appropriate.

3.6 Feedback (Monitoring)

The RIS_B Program is a living program that is required to be monitored continuously for changes that could impact the basis for which welds are selected for examination. Monitoring encompasses numerous facets, including the review of changes to the plant configuration, changes to operations that could affect the degradation assessment, a review of Vogtle NDE results, a review of site failure information from the Vogtle corrective action program, and a review of industry failure information from industry operating experience (OE). Also included is a review of PRA changes for their impact on the RIS_B program. These reviews provide a feedback loop such that new relevant information is obtained that will ensure that the appropriate identification of HSS piping locations selected for examination is maintained. As a minimum, this review will be conducted on an ASME period basis. In addition, more frequent adjustment may be required as directed by NRC Bulletin or Generic Letter requirements, or by industry and plant-specific feedback.

If an adverse condition, such as an unacceptable flaw is detected during examinations, the adverse condition will be addressed by the corrective action program and procedures. The following are appropriate actions to be taken:

A. Identify (Examination results conclude there is an unacceptable flaw).
B. Characterize (Determine if regulatory reporting is required and assess if an immediate safety or operation impact exists).
C. Evaluate (Determine the cause and extent of the condition identified and develop a corrective action plan or plans).
D. Decide (make a decision to implement the corrective action plan).
E. Implement (complete the work necessary to correct the problem and prevent recurrence).
F. Monitor (through the audit process ensure that the RIS_B program has been updated based on the completed corrective action).
G. Trend (Identify conditions that are significant based on accumulation of similar issues).

For preservice examinations, SNC will follow the rules contained in Section 3.0 of N-716. Welds classified HSS require a preservice inspection. The examination volumes, techniques, and procedures shall be in accordance with Table 1 of N-716. Welds classified as LSS do not require preservice inspection.

4. PROPOSED ISI PLAN CHANGE

VEGP 1&2 is currently in the first period of the third inspection interval and is using the traditional ASME Section XI inspection methodology for ISI examination of piping welds. At least 16% of the ASME Section XI piping examinations will be performed by the end of the first period of the third inspection interval to ensure compliance with the traditional ASME Section XI inspection methodology.

In anticipation of the approval of this RIS_B submittal, welds that are being examined using the traditional ASME Section XI methodology also meet the examination requirements of Table 1 of Code Case N-716. After approval of the RIS_B submittal, those welds that were examined during the third inspection interval, which are selected by the RIS_B process, will be credited toward the RIS_B requirements.

During the second and third ISI periods, the remainder of the inspection locations selected for examination per the RIS_B Program will be examined. Examinations shall be performed such that the period percentage requirements of ASME Section XI are met.

A comparison between the RIS_B Program and the ASME Section XI 1989 Code Edition program requirements for in-scope piping is provided in Table 4a (Unit 1) and Table 4b (Unit 2).

5. REFERENCES/DOCUMENTATION

EPRI Report 1006937, *Extension of EPRI Risk Informed ISI Methodology to Break Exclusion Region Programs*

EPRI TR-112657, *Revised Risk-Informed Inservice Inspection Evaluation Procedure*, Rev. B-A

ASME Code Case N-716, *Alternative Piping Classification and Examination Requirements, Section XI Division 1*

Regulatory Guide 1.174, *An Approach for Using Probabilistic Risk Assessment in Risk-Informed Decisions On Plant-Specific Changes to the Licensing Basis*

Regulatory Guide 1.178, *An Approach for Plant-Specific Risk-Informed Decisionmaking Inservice Inspection of Piping*

Regulatory Guide 1.200, Rev 1 "*An Approach For Determining The Technical Adequacy Of Probabilistic Risk Assessment Results For Risk-Informed Activities.*"

USNRC Safety Evaluation for Grand Gulf Nuclear Station Unit 1, Request for Alternative GG-ISI-002-Implement Risk-Informed ISI based on ASME Code Case N-716, dated September 21, 2007

USNRC Safety Evaluation for DC Cook Nuclear Plant, Units 1 and 2, Risk-Informed Safety-Based ISI program for Class 1 and 2 Piping Welds, dated September 28, 2007

Supporting Onsite Documentation

Structural Integrity Calculation 0800472.302 "N-716 Evaluation for Vogtle Units 1 and 2" Rev 0

Structural Integrity Calculation 0800472.301 "Degradation Mechanism Evaluation for Vogtle Units 1 & 2" Rev 0

Table 3.1a
VEGP-1 Code Case N-716 Safety Significance Determination

System Description	Weld Count	N-716 Safety Significance Determination					Safety Significance	
		RCPB	SDC	PWR: FW	BER	CDF > 1E-6	High	Low
RC	49	✓	✓				✓	
	252	✓					✓	
CVCS	87	✓					✓	
	310							✓
SI	126	✓	✓				✓	
	386	✓					✓	
	98		✓				✓	
	462							✓
RHR	8		✓				✓	
	401							✓
AFW	178			✓			✓	
FW	27				✓		✓	
	52			✓			✓	
	35							✓
MS	52				✓		✓	
	160							✓
CS	216							✓
SUMMARY RESULTS FOR ALL SYSTEMS	175	✓	✓				✓	
	727	✓					✓	
	104		✓				✓	
	79				✓		✓	
	230			✓			✓	
	1584							✓
TOTALS	2899							

AFW = Auxiliary Feedwater portion of main feedwater
CS = Containment Spray
CVCS – Chemical Volume and Control System
FW = Main Feedwater
MS = Main Steam
RC = Reactor Coolant
RHR = Residual Heat Removal
SI = Safety Injection
SDC = Shutdown Cooling

Table 3.1b
VEGP-2 Code Case N-716 Safety Significance Determination

System Description	Weld Count	N-716 Safety Significance Determination					Safety Significance	
		RCPB	SDC	PWR: FW	BER	CDF > 1E-6	High	Low
RC	51	✓	✓				✓	
	283	✓					✓	
CVCS	100	✓					✓	
	329							✓
SI	118	✓	✓				✓	
	404	✓					✓	
	90		✓				✓	
	432							✓
RHR	6		✓				✓	
	399							✓
AFW	182			✓			✓	
FW	31				✓		✓	
	48			✓			✓	
	28							✓
MS	53				✓		✓	
	106							✓
CS	204							✓
SUMMARY RESULTS FOR ALL SYSTEMS	169	✓	✓				✓	
	787	✓					✓	
	96		✓				✓	
	84				✓		✓	
	230			✓			✓	
	1498							✓
TOTALS	2864							

AFW = Auxiliary Feedwater portion of main feedwater
CS = Containment Spray
CVCS – Chemical Volume and Control System
FW = Main Feedwater
MS = Main Steam
RC = Reactor Coolant
RHR = Residual Heat Removal
SI = Safety Injection
SDC = Shutdown Cooling

Table 3.2
Failure Potential Assessment Summary

System[1]	Thermal Fatigue		Stress Corrosion Cracking				Localized Corrosion			Flow Sensitive	
	TASCS	TT	IGSCC	TGSCC	ECSCC	PWSCC	MIC	PIT	CC	E-C	FAC
RC	✓	✓				✓					
CVCS[2]		✓									
SI[2]	✓	✓	✓								
RHR[2]											
AFW		✓									
FW[2]		✓									
MS[2]											
CS[2]											

Notes

1. Systems are described in Table 3.1a (Unit 1) and Table 3.1b (Unit 2).
2. A degradation mechanism assessment was not performed on low safety significant piping segments. This includes the CS system in its entirety, as well as portions of the CVCS, SI, RHR, FW and MS systems.

Table 3.3a
VEGP-1 Code Case N-716 Element Selections

System	Weld Count		N716 Selection Considerations					Selections
	HSS	LSS	DMs	RCPB	RCPB (IFIV)	RCPB (OC)	BER	
AFW	138		TT					18
AFW	40		None					0
CVCS	9		TT	✓	✓			2
CVCS	6		TT	✓				2
CVCS	62		None	✓	✓			5
CVCS	10		None	✓				0
CVCS		310						0
FW	12		TT					3
FW	27		None				✓	5
FW	40		None					0
FW		35						0
MS	52		None				✓	6
MS		160						0
RC	4		PWSCC	✓	✓			4
RC	8		TASCS	✓	✓			8
RC	12		TASCS,TT	✓	✓			6
RC	23		TT	✓	✓			6
RC	207		None	✓	✓			5
RC	47		None	✓				2
RHR	6		None					2
RHR		401						0
SI	10		IGSCC	✓				3
SI	12		TASCS,TT	✓	✓			12
SI	8		TT	✓	✓			4
SI	4		TT, IGSCC	✓				1
SI	42		None	✓	✓			26
SI	438		None	✓				16
SI	98		None					0
SI		462						0
CS		216						0
Summary Results All Systems	40		TT	✓	✓			12
	6		TT	✓				2
	150		TT					21
	4		PWSCC	✓	✓			4
	8		TASCS	✓	✓			8
	24		TASCS,TT	✓	✓			18
	10		IGSCC	✓				3
	4		TT, IGSCC	✓				1
	311		None	✓	✓			36
	495		None	✓				18
	184		None					2
	79		None				✓	11
		1584						0
Totals	**1315**	**1584**						**136**

Note
Systems are described in Table 3.1a (Unit 1) and Table 3.1b (Unit 2).

Table 3.3b
VEGP-2 Code Case N-716 Element Selections

System	Weld Count		N716 Selection Considerations					Selections
	HSS	LSS	DMs	RCPB	RCPB (IFIV)	RCPB (OC)	BER	
AFW	141		TT					19
AFW	41		None					0
CVCS	9		TT	✓	✓			2
CVCS	6		TT	✓				2
CVCS	75		None	✓	✓			6
CVCS	10		None	✓				0
CVCS		329						0
FW	12		TT					3
FW	31		None				✓	5
FW	36		None					0
FW		28						0
MS	53		None				✓	6
MS		106						0
RC	4		PWSCC	✓	✓			4
RC	8		TASCS	✓	✓			4
RC	13		TASCS,TT	✓	✓			6
RC	26		TT	✓	✓			6
RC	235		None	✓	✓			10
RC	48		None	✓				4
RHR	6		None					2
RHR		399						0
SI	10		IGSCC	✓				3
SI	12		TASCS,TT	✓	✓			12
SI	8		TT	✓	✓			4
SI	4		TT, IGSCC	✓				1
SI	42		None	✓	✓			27
SI	438		None	✓				15
SI	98		None					0
SI		432						0
CS		204						0
Summary Results All Systems	43		TT	✓	✓			12
	6		TT	✓				2
	153		TT					22
	4		PWSCC	✓	✓			4
	8		TASCS	✓	✓			4
	25		TASCS,TT	✓	✓			18
	10		IGSCC	✓				3
	4		TT, IGSCC	✓				1
	352		None	✓	✓			43
	496		None	✓				19
	181		None					2
	84		None				✓	11
		1498						0
Totals	**1366**	**1498**						**141**

Note
Systems are described in Table 3.1a (Unit 1) and Table 3.1b (Unit 2).

Table 3.4-1a
VEGP-1 Risk Impact Analysis Results

System (1)	Safety Significance	Break Location (5)	Failure Potential		Inspections			CDF Impact		LERF Impact	
			DMs	Rank (4)	SXI (2)	RIS_B (3)	Delta	w/POD	w/o POD	w/POD	w/o POD
AFW	High	SSBI	TT	Medium	8	18	10	-2.76E-10	-1.00E-10	-2.76E-11	-1.00E-11
AFW	High	SSBI	None	Low	3	0	-3	1.50E-12	1.50E-12	1.50E-13	1.50E-13
AFW Total								**-2.75E-10**	**-9.85E-11**	**-2.75E-11**	**-9.85E-12**
CVCS	High	LOCA	TT	Medium	0	2	2	-7.20E-09	-4.00E-09	-7.20E-10	-4.00E-10
CVCS	High	IPLOCA	TT	Medium	0	2	2	-3.60E-11	-2.00E-11	-3.60E-12	-2.00E-12
CVCS	High	AOVLOCA	TT	Medium	0	0	0	0.00E+00	0.00E+00	0.00E+00	0.00E+00
CVCS	High	LOCA	None	Low	0	5	5	-5.00E-10	-5.00E-10	-5.00E-11	-5.00E-11
CVCS	High	PLOCA	None	Low	0	0	0	0.00E+00	0.00E+00	0.00E+00	0.00E+00
CVCS	High	ILOCA	None	Low	0	0	0	0.00E+00	0.00E+00	0.00E+00	0.00E+00
CVCS	Low	LSS		Assume Medium	31	0	-31	3.10E-10	3.10E-10	3.10E-11	3.10E-11
CVCS Total								**-7.43E-09**	**-4.21E-09**	**-7.43E-10**	**-4.21E-10**
FW	High	SSBI	TT	Medium	4	3	-1	-3.00E-11	1.00E-11	-3.00E-12	1.00E-12
FW	High	SSBI	None	Low	1	5	4	-2.00E-12	-2.00E-12	-2.00E-13	-2.00E-13
FW	High	SSBO	None	Low	4	0	-4	2.00E-12	2.00E-12	2.00E-13	2.00E-13
FW	Low	LSS		Assume Medium	8	0	-8	8.00E-11	8.00E-11	8.00E-12	8.00E-12
FW Total								**5.00E-11**	**9.00E-11**	**5.00E-12**	**9.00E-12**
MS	High	SSBI	None	Low	5	6	1	-5.00E-13	-5.00E-13	-5.00E-14	-5.00E-14
MS	High	SSBO	None	Low	0	0	0	0.00E+00	0.00E+00	0.00E+00	0.00E+00
MS	Low	LSS		Assume Medium	9	0	-9	9.00E-11	9.00E-11	9.00E-12	9.00E-12
MS Total								**8.95E-11**	**8.95E-11**	**8.95E-12**	**8.95E-12**
RC	High	LOCA	PWSCC	Medium	4	4	0	0.00E+00	0.00E+00	0.00E+00	0.00E+00
RC	High	LOCA	TASCS	Medium	0	8	8	-2.88E-08	-1.60E-08	-2.88E-09	-1.60E-09
RC	High	LOCA	TASCS,TT	Medium	10	6	-4	-9.60E-09	8.00E-09	-9.60E-10	8.00E-10
RC	High	LOCA	TT	Medium	3	6	3	-1.80E-08	-6.00E-09	-1.80E-09	-6.00E-10
RC	High	LOCA	None	Low	55	5	-50	5.00E-09	5.00E-09	5.00E-10	5.00E-10
RC	High	PLOCASD	None	Low	0	2	2	-1.00E-12	-1.00E-12	-1.00E-13	-1.00E-13

Table 3.4-1a
VEGP-1 Risk Impact Analysis Results

System (1)	Safety Significance	Break Location (5)	Failure Potential		Inspections			CDF Impact		LERF Impact	
			DMs	Rank (4)	SXI (2)	RIS_B (3)	Delta	w/POD	w/o POD	w/POD	w/o POD
RC	High	MVLOCA	None	Low	0	0	0	0.00E+00	0.00E+00	0.00E+00	0.00E+00
RC Total								**-5.14E-08**	**-9.00E-09**	**-5.14E-09**	**-9.00E-10**
RHR	High	PLOCASD2	None	Low	0	2	2	-1.00E-12	-1.00E-12	-1.00E-13	-1.00E-13
RHR	Low	LSS		Assume Medium	37	0	-37	3.70E-10	3.70E-10	3.70E-11	3.70E-11
RHR Total								**3.69E-10**	**3.69E-10**	**3.69E-11**	**3.69E-11**
SI	High	PLOCA	IGSCC	Medium	6	3	-3	3.00E-11	3.00E-11	3.00E-12	3.00E-12
SI	High	LOCA	TASCS,TT	Medium	0	8	8	-2.88E-08	-1.60E-08	-2.88E-09	-1.60E-09
SI	High	LOCA	TT	Medium	0	4	4	-1.44E-08	-8.00E-09	-1.44E-09	-8.00E-10
SI	High	PLOCA	TT, IGSCC	Medium	0	0	0	0.00E+00	0.00E+00	0.00E+00	0.00E+00
SI	High	LOCA	None	Low	22	26	4	-4.00E-10	-4.00E-10	-4.00E-11	-4.00E-11
SI	High	PLOCA	None	Low	18	8	-10	5.00E-12	5.00E-12	5.00E-13	5.00E-13
SI	High	PPLOCA	None	Low	5	8	3	-1.50E-12	-1.50E-12	-1.50E-13	-1.50E-13
SI	Low	LSS		Assume Medium	37	0	-37	3.70E-10	3.70E-10	3.70E-11	3.70E-11
SI Total								**-4.32E-08**	**-2.40E-08**	**-4.32E-09**	**-2.40E-09**
CS Total	Low	LSS		Assume Medium	19	0	-19	**1.90E-10**	**1.90E-10**	**1.90E-11**	**1.90E-11**
Grand Total					**289**	**131**		**-1.02E-07**	**-3.66E-08**	**-1.02E-08**	**-3.66E-09**

Notes
1. Systems are described in Table 3.1a (Unit 1) and Table 3.1b (Unit 2).
2. Only those ASME Section XI Code inspection locations that received a volumetric examination in addition to a surface examination are included in the count. Inspection locations previously subjected to a surface examination only were not considered in accordance with Section 3.7.1 of EPRI TR-112657.
3. Only those RIS_B inspection locations that receive a volumetric examination are included in the count. In section locations subjected to VT2 only are not credited in count for risk impact assessment.
4. The failure potential rank for high safety significant (HSS) locations is then assigned as "High", "Medium", or "Low" depending upon potential susceptibly to the various types of degradation. [Note: Low safety significant (LSS) locations were conservatively assumed to be a rank of Medium (i.e., "Assume Medium")
5. The "LSS" designation in Table 3.4-1a (Unit 1) and Table 3.4-1b (Unit 2) is used to identify those Code Class 2 locations that are not HSS because they do not meet any of the five HSS criteria of Section 2(a) of N-716 (e.g., not part of the BER scope).

Table 3.4-1b
VEGP-2 Risk Impact Analysis Results

System (1)	Safety Significance	Break Location (5)	Failure Potential		Inspections			CDF Impact		LERF Impact	
			DMs	Rank (4)	SXI (2)	RIS_B (3)	Delta	w/POD	w/o POD	w/POD	w/o POD
AFW	High	SSBI	TT	Medium	13	19	6	-2.64E-10	-6.00E-11	-2.64E-11	-6.00E-12
AFW	High	SSBI	None	Low	1	0	-1	5.00E-13	5.00E-13	5.00E-14	5.00E-14
AFW Total								**-2.64E-10**	**-5.95E-11**	**-2.64E-11**	**-5.95E-12**
CVCS	High	LOCA	TT	Medium	0	2	2	-7.20E-09	-4.00E-09	-7.20E-10	-4.00E-10
CVCS	High	IPLOCA	TT	Medium	0	2	2	-3.60E-11	-2.00E-11	-3.60E-12	-2.00E-12
CVCS	High	AOVLOCA	TT	Medium	0	0	0	0.00E+00	0.00E+00	0.00E+00	0.00E+00
CVCS	High	LOCA	None	Low	0	6	6	-6.00E-10	-6.00E-10	-6.00E-11	-6.00E-11
CVCS	High	PLOCA	None	Low	0	0	0	0.00E+00	0.00E+00	0.00E+00	0.00E+00
CVCS	High	ILOCA	None	Low	0	0	0	0.00E+00	0.00E+00	0.00E+00	0.00E+00
CVCS	Low	LSS		Assume Medium	41	0	-41	4.10E-10	4.10E-10	4.10E-11	4.10E-11
CVCS Total								**-7.43E-09**	**-4.21E-09**	**-7.43E-10**	**-4.21E-10**
FW	High	SSBI	TT	Medium	2	3	1	-4.20E-11	-1.00E-11	-4.20E-12	-1.00E-12
FW	High	SSBI	None	Low	4	5	1	-5.00E-13	-5.00E-13	-5.00E-14	-5.00E-14
FW	High	SSBO	None	Low	0	0	0	0.00E+00	0.00E+00	0.00E+00	0.00E+00
FW	Low	LSS		Assume Medium	5	0	-5	5.00E-11	5.00E-11	5.00E-12	5.00E-12
FW Total								**7.50E-12**	**3.95E-11**	**7.50E-13**	**3.95E-12**
MS	High	SSBI	None	Low	3	6	3	-1.50E-12	-1.50E-12	-1.50E-13	-1.50E-13
MS	High	SSBO	None	Low	2	0	-2	1.00E-12	1.00E-12	1.00E-13	1.00E-13
MS	Low	LSS		Assume Medium	10	0	-10	1.00E-10	1.00E-10	1.00E-11	1.00E-11
MS Total								**9.95E-11**	**9.95E-11**	**9.95E-12**	**9.95E-12**
RC	High	LOCA	PWSCC	Medium	4	4	0	0.00E+00	0.00E+00	0.00E+00	0.00E+00
RC	High	LOCA	TASCS	Medium	0	4	4	-1.44E-08	-8.00E-09	-1.44E-09	-8.00E-10
RC	High	LOCA	TASCS,TT	Medium	12	6	-6	-7.20E-09	1.20E-08	-7.20E-10	1.20E-09
RC	High	LOCA	TT	Medium	2	6	4	-1.92E-08	-8.00E-09	-1.92E-09	-8.00E-10
RC	High	LOCA	None	Low	73	10	-63	6.30E-09	6.30E-09	6.30E-10	6.30E-10
RC	High	PLOCASD	None	Low	1	2	1	-5.00E-13	-5.00E-13	-5.00E-14	-5.00E-14
RC	High	MVLOCA	None	Low	0	2	2	-1.00E-12	-1.00E-12	-1.00E-13	-1.00E-13

Table 3.4-1b
VEGP-2 Risk Impact Analysis Results

System (1)	Safety Significance	Break Location (5)	Failure Potential		Inspections			CDF Impact		LERF Impact	
			DMs	Rank (4)	SXI (2)	RIS_B (3)	Delta	w/POD	w/o POD	w/POD	w/o POD
RC Total								-3.45E-08	2.30E-09	-3.45E-09	2.30E-10
RHR	High	PLOCASD2	None	Low	0	2	2	-1.00E-12	-1.00E-12	-1.00E-13	-1.00E-13
RHR	Low	LSS		Assume Medium	28	0	-28	2.80E-10	2.80E-10	2.80E-11	2.80E-11
RHR Total								2.79E-10	2.79E-10	2.79E-11	2.79E-11
SI	High	PLOCA	IGSCC	Medium	5	3	-2	2.00E-11	2.00E-11	2.00E-12	2.00E-12
SI	High	LOCA	TASCS,TT	Medium	0	8	8	-2.88E-08	-1.60E-08	-2.88E-09	-1.60E-09
SI	High	LOCA	TT	Medium	0	4	4	-1.44E-08	-8.00E-09	-1.44E-09	-8.00E-10
SI	High	PLOCA	TT, IGSCC	Medium	0	0	0	0.00E+00	0.00E+00	0.00E+00	0.00E+00
SI	High	LOCA	None	Low	20	27	7	-7.00E-10	-7.00E-10	-7.00E-11	-7.00E-11
SI	High	PLOCA	None	Low	16	7	-9	4.50E-12	4.50E-12	4.50E-13	4.50E-13
SI	High	PPLOCA	None	Low	4	8	4	-2.00E-12	-2.00E-12	-2.00E-13	-2.00E-13
SI	Low	LSS		Assume Medium	35	0	-35	3.50E-10	3.50E-10	3.50E-11	3.50E-11
SI Total								-4.35E-08	-2.43E-08	-4.35E-09	-2.43E-09
CS Total	Low	LSS		Assume Medium	17	0	-17	1.70E-10	1.70E-10	1.70E-11	1.70E-11
Grand Total					298	136		-8.52E-08	-2.57E-08	-8.52E-09	-2.57E-09

Notes

1. Systems are described in Table 3.1a (Unit 1) and Table 3.1b (Unit 2).
2. Only those ASME Section XI Code inspection locations that received a volumetric examination in addition to a surface examination are included in the count. Inspection locations previously subjected to a surface examination only were not considered in accordance with Section 3.7.1 of EPRI TR-112657.
3. Only those RIS_B inspection locations that receive a volumetric examination are included in the count. In section locations subjected to VT2 only are not credited in count for risk impact assessment.
4. The failure potential rank for high safety significant (HSS) locations is then assigned as "High", "Medium", or "Low" depending upon potential susceptibly to the various types of degradation. [Note: Low safety significant (LSS) locations were conservatively assumed to be a rank of Medium (i.e., "Assume Medium")
5. The "LSS" designation in Table 3.4-1a (Unit 1) and Table 3.4-1b (Unit 2) is used to identify those Code Class 2 locations that are not HSS because they do not meet any of the five HSS criteria of Section 2(a) of N-716 (e.g., not part of the BER scope).

Table 4a
VEGP-1 Inspection Location Selection Comparison

System (1)	Safety Significance		Break Location	Failure Potential		Code Category	Weld Count	Section XI		Code Case N716	
	High	Low		DMs	Rank (3)			Vol	Surface	RIS_B	Other (2)
AFW	✓		SSBI	TT	Medium	C-F-2	138	8	0	18	NA
AFW	✓		SSBI	None	Low	C-F-2	40	3	0	0	NA
CVCS	✓		LOCA	TT	Medium	B-J	9	0	4	2	NA
CVCS	✓		IPLOCA	TT	Medium	B-J	4	0	4	2	NA
CVCS	✓		AOVLOCA	TT	Medium	B-J	2	0	0	0	NA
CVCS	✓		LOCA	None	Low	B-J	62	0	29	5	NA
CVCS	✓		PLOCA	None	Low	B-J	2	0	0	0	NA
CVCS	✓		ILOCA	None	Low	B-J	8	0	0	0	NA
CVCS		✓	LSS	N/A	Assume Medium	B-J	310	31	2	0	NA
FW	✓		SSBI	TT	Medium	C-F-2	12	4	0	3	NA
FW	✓		SSBI	None	Low	C-F-2	56	1	0	5	NA
FW	✓		SSBO	None	Low	C-F-2	11	4	0	0	NA
FW	□	✓	LSS	N/A	Assume Medium	C-F-2	35	8	0	0	NA
MS	✓		SSBI	None	Low	C-F-2	44	5	0	6	NA
MS	✓		SSBO	None	Low	C-F-2	8	0	0	0	NA
MS		✓	LSS	N/A	Assume Medium	C-F-2	160	9	0	0	NA
RC	✓		LOCA	PWSCC	Medium	B-F	4	4	0	4	NA
RC	✓		LOCA	TASCS	Medium	B-J	8	0	2	8	NA
RC	✓		LOCA	TASCS,TT	Medium	B-J	12	10	0	6	NA
RC	✓		LOCA	TT	Medium	B-J	23	3	6	6	NA
RC	✓		LOCA	None	Low	B-F, B-J	207	55	27	5	NA
RC	✓		PLOCASD	None	Low	B-J	35	0	1	2	NA
RC	✓		MVLOCA	None	Low	B-J	12	0	0	0	NA
RHR	✓		PLOCASD2	None	Low	C-F-1	6	0	0	2	NA
RHR		✓	LSS	N/A	Assume Medium	C-F-1	401	37	0	0	NA
SI	✓		PLOCA	IGSCC	Medium	B-F	10	6	0	3	NA
SI	✓		LOCA	TASCS,TT	Medium	B-F	12	0	12	8	4 VT2
SI	✓		LOCA	TT	Medium	B-F	8	0	8	4	NA

SI	✓		PLOCA	TT, IGSCC	Medium	B-F	4	0	0	0	1 VT2
SI	✓		LOCA	None	Low	B-F	42	22	0	26	NA

Table 4a
VEGP-1 Inspection Location Selection Comparison

System (1)	Safety Significance		Break Location	Failure Potential		Code Category	Weld Count	Section XI		Code Case N716	
	High	Low		DMs	Rank (3)			Vol	Surface	RIS_B	Other (2)
SI	✓		PLOCA	None	Low	B-F	410	18	44	8	NA
SI	✓		PPLOCA	None	Low	C-F-1	126	5	0	8	NA
SI		✓	LSS	N/A	Assume Medium	C-F-1	462	37	1	0	NA
CS		✓	LSS	N/A	Assume Medium	C-F-1	216	19	0	0	NA

Notes

1. Systems are described in Table 3.1a (Unit 1) and Table 3.1b (Unit 2).
2. The column labeled "Other" is generally used to identify plant augmented inspection program locations credited per Section 4 of Code Case N-716. Code Case N-716 allows the existing plant augmented inspection program for IGSCC (Categories B through G) in a BWR to be credited toward the 10% requirement. This option is not applicable for the VEGP RIS_B application. The "Other" column has been retained in this table solely for uniformity purposes with other RIS_B application template submittals and to indicate when RIS_B selections will receive a VT-2 examination (these are not credited in risk impact assessment).
3. The failure potential rank for high safety significant (HSS) locations is then assigned as "High", "Medium", or "Low" depending upon potential susceptibly to the various types of degradation. [Note: Low safety significant (LSS) locations were conservatively assumed to be a rank of Medium (i.e., "Assume Medium").

Table 4b
VEGP-2 Inspection Location Selection Comparison

System (1)	Safety Significance		Break Location	Failure Potential		Code Category	Weld Count	Section XI		Code Case N716	
	High	Low		DMs	Rank (3)			Vol	Surface	RIS_B	Other (2)
AFW	✓		SSBI	TT	Medium	C-F-2	141	13	0	19	NA
AFW	✓		SSBI	None	Low	C-F-2	41	1	0	0	NA
CVCS	✓		LOCA	TT	Medium	B-J	9	0	6	2	NA
CVCS	✓		IPLOCA	TT	Medium	B-J	4	0	4	2	NA
CVCS	✓		AOVLOCA	TT	Medium	B-J	2	0	0	0	NA
CVCS	✓		LOCA	None	Low	B-J	75	0	27	6	NA
CVCS	✓		PLOCA	None	Low	B-J	2	0	2	0	NA
CVCS	✓		ILOCA	None	Low	B-J	8	0	0	0	NA
CVCS		✓	LSS	N/A	Assume Medium	B-J	329	41	2	0	NA
FW	✓		SSBI	TT	Medium	C-F-2	12	2	0	3	NA
FW	✓		SSBI	None	Low	C-F-2	57	4	0	5	NA
FW	✓		SSBO	None	Low	C-F-2	11	0	0	0	NA
FW	□	✓	LSS	N/A	Assume Medium	C-F-2	28	5	0	0	NA
MS	✓		SSBI	None	Low	C-F-2	45	3	0	6	NA
MS	✓		SSBO	None	Low	C-F-2	8	2	0	0	NA
MS		✓	LSS	N/A	Assume Medium	C-F-2	106	10	0	0	NA
RC	✓		LOCA	PWSCC	Medium	B-F	4	4	0	4	NA
RC	✓		LOCA	TASCS	Medium	B-J	8	0	0	4	NA
RC	✓		LOCA	TASCS,TT	Medium	B-J	13	12	0	6	NA
RC	✓		LOCA	TT	Medium	B-J	26	2	8	6	NA
RC	✓		LOCA	None	Low	B-F, B-J	235	73	24	10	NA
RC	✓		PLOCASD	None	Low	B-J	36	1	0	2	NA
RC	✓		MVLOCA	None	Low	B-J	12	0	1	2	NA
RHR	✓		PLOCASD2	None	Low	C-F-1	6	0	0	2	NA
RHR		✓	LSS	N/A	Assume Medium	C-F-1	399	28	0	0	NA
SI	✓		PLOCA	IGSCC	Medium	B-F	10	5	0	3	NA
SI	✓		LOCA	TASCS,TT	Medium	B-F	12	0	12	8	4 VT2
SI	✓		LOCA	TT	Medium	B-F	8	0	4	4	NA

Table 4b
VEGP-2 Inspection Location Selection Comparison

System (1)	Safety Significance		Break Location	Failure Potential		Code Category	Weld Count	Section XI		Code Case N716	
	High	Low		DMs	Rank (3)			Vol	Surface	RIS_B	Other (2)
SI	✓		PLOCA	TT, IGSCC	Medium	B-F	4	0	0	0	1 VT2
SI	✓		LOCA	None	Low	B-F	42	20	0	27	NA
SI	✓		PLOCA	None	Low	B-F	408	16	49	7	NA
SI	✓		PPLOCA	None	Low	C-F-1	128	4	0	8	NA
SI		✓	LSS	N/A	Assume Medium	C-F-1	432	35	1	0	NA
CS		✓	LSS	N/A	Assume Medium	C-F-1	204	17	0	0	NA

Notes

1. Systems are described in Table 3.1a (Unit 1) and Table 3.1b (Unit 2).
2. The column labeled "Other" is generally used to identify plant augmented inspection program locations credited per Section 4 of Code Case N-716. Code Case N-716 allows the existing plant augmented inspection program for IGSCC (Categories B through G) in a BWR to be credited toward the 10% requirement. This option is not applicable for the VEGP RIS_B application. The "Other" column has been retained in this table solely for uniformity purposes with other RIS_B application template submittals and to indicate when RIS_B selections will receive a VT-2 examination (these are not credited in risk impact assessment).
3. The failure potential rank for high safety significant (HSS) locations is then assigned as "High", "Medium", or "Low" depending upon potential susceptibly to the various types of degradation. [Note: Low safety significant (LSS) locations were conservatively assumed to be a rank of Medium (i.e., "Assume Medium").

Attachment A to VEGP N716 Template

Consideration of the Adequacy of Probabilistic Risk Assessment Model for Application of Code Case N716

Summary Statement of VEGP PRA Model Capability for Use in Risk-Informed Inservice Inspection Program Licensing Actions

Introduction

SNC employs a multi-faceted approach to establishing and maintaining the technical adequacy and plant fidelity of the PRA models for all operating SNC nuclear generation sites. This approach includes both a proceduralized PRA maintenance and update process and the use of self-assessments and independent peer reviews. The following information describes this approach as it applies to the VEGP PRA.

PRA Maintenance and Update

The SNC risk management process ensures that the applicable PRA model remains an accurate reflection of the as-built and as-operated units. This process is defined in the SNC risk management program which is described in SNC procedure NL-PRA-001[1], "Generation of PRA models and Associated Updates". SNC Procedure NL-PRA-001 delineates the responsibilities and guidelines for updating the full power internal events PRA models at all operating SNC nuclear generation sites. The overall SNC risk management program, including NL-PRA-001, defines the process for implementing regularly scheduled and interim PRA model updates, for tracking issues identified as potentially affecting the PRA models (e.g., due to changes in the plant, errors or limitations identified in the model, industry operational experience), and for controlling the model and associated computer files. To ensure that the current PRA model remains an accurate reflection of the as-built, as-operated plant, the VEGP PRA model has been updated according to the requirements in the following sections of VEGP procedure NL-PRA-001:

- Pertinent modifications to the physical plant (i.e. those potentially affecting the Base Line PRA (BL-PRA) models, calculated core damage frequencies, or large early release frequencies to a significant degree) shall be reviewed to determine the scope and necessity of a revision to the baseline model within six months following the Unit 2 refueling outage or a specific major plant modification occurring outside a refueling outage. The BL-PRAs should be updated as necessary in accordance with a schedule approved by the PRA Services Supervisor following the scoping review. Upon completion of the lead unit's BL-PRA, the other unit's BL-PRA will be regenerated by modification of the updated BL-PRAs to account for unit differences which significantly impact the results.

- Pertinent modifications to plant procedures and technical specifications shall be reviewed annually for changes which are of statistical significance to the results of the BL-PRA and those changes documented. Reliability data, failure data, initiating events frequency data, human reliability data, and other such PRA INPUTs shall be reviewed approximately every three years for statistical significance to the results of the BL-PRAs. Following the tri-annual review, the BL-PRAs shall be updated to account for the significant changes to these two categories of PRA INPUTS in accordance with an approved schedule.

- BL-PRAs shall be updated to reflect germane changes in methodology, phenomenology, and regulation as judged to be prudent or as required by regulation.

In addition to these activities, SNC risk management procedures [2,3,4,5,6] provide the guidance for particular risk management and PRA quality and maintenance activities. This guidance includes:

- Documentation of the PRA model, PRA products, and bases documents.
- The approach for controlling electronic storage of Risk Management (RM) products including PRA update information, PRA models, and PRA applications.
- Guidelines for updating the full power, internal events PRA models for SNC nuclear generation sites.
- Guidance for use of quantitative and qualitative risk models in support of the On-Line Work Control Process Program for risk evaluations for maintenance tasks (corrective maintenance, preventive maintenance, minor maintenance, surveillance tests and modifications) on systems, structures, and components (SSCs) within the scope of the Maintenance Rule (10CFR50.65 (a)(4)).

In accordance with this guidance, regularly scheduled PRA model updates nominally occur on an approximate 3-year cycle; however, longer intervals may be justified if it can be shown that the PRA continues to adequately represent the as-built, as-operated plant. Table A-1 shows the brief history of the major VEGP PRA model updates.

The PRA model for internal events (except internal flooding) used for the RIS_B evaluation was Vogtle PRA L2UP model [7]. The Vogtle PRA L2UP model was previously used for the Vogtle Severe Accident Management Alternatives (SAMA) Analysis, which had been submitted in 2007 as a part of Vogtle License renewal submittal. The PRA adequacy was addressed in the SAMA analysis report [8] and the responses to the Request for Additional Information in 2007 [9].

The Vogtle PRA L2UP model includes an upgraded level 1 internal event PRA model and a level 2 PRA model. The upgraded level 1 PRA model included in the VEGP L2UP model was based on VEGP Level 1 PRA model Rev 3 [10], in which all PWROG PRA peer review B Findings and Observations (F&Os) were addressed (there were no A findings). The upgraded level 2 PRA model included in the L2UP model was based on a PWROG methodology (WCAP-16341-P [11]) which was intended to reflect ASME PRA standard Capability Category II.

In addition, during 2008, the VEGP internal flooding PRA was re-performed in order to meet ANS PRA standard Capability Category II. The revised internal flooding PRA model [12] was used for the VEGP RIS_B evaluation. Self assessment findings (by an independent external contractor) and the associated resolutions were also documented as a part of the re-performed internal flooding analysis to ensure that the internal flooding evaluation met all requirements for Capability Category II.

In the following section, details of PRA self assessment, peer review, and resolution of findings and gaps were documented. Also, the impact of non-compliance of some gaps on the VEGP RIS_B program is described.

Table A-1: History of the Major VEGP PRA Model Updates

Model	Document No.	Scope	Updated Items	CDF and LERF
IPE	WCAP-13553 (WH report) by WH and SNC, 11/1992	At-power, internal and external, CDF and Level 2	The original	CDF: 4.9E-5 LERF: 1.78E-6
Rev. 0	SAIC prepared reports, 3/1998.	At-power, internal, CDF and LERF	Converted from a large Event Tree/small Fault Tree approach to a small Event Tree/large Fault Tree approach (linked fault tree model method). The PRA software changed from WESQT/GRAFTER (Westinghouse Event Tree and Fault tree software) to CAFTA	CDF: 3.62E-5 LERF: 1.72E-6 The CDF reduction was mainly due to changes, such as, removal of unrealistic SBO scenarios, addition of more realistic assumptions regarding the effect of loss of room cooling, and removal of a 'guaranteed failure' assumption made during IPE for event CON (operator action to depressurize one SG to cause feed flow from the condensate pumps if AFW failed).
Rev. 1	PSA-V-99-002 by SNC, 9/1999	At-power, internal, CDF and LERF	Enhanced the treatment of operator action dependency, removed circular logic, and made minor corrections/improvements.	

Table A-1: History of the Major VEGP PRA Model Updates

Model	Document No.	Scope	Updated Items	CDF and LERF
Rev. 2	PSA-V-99-012 by SNC, 1/2000	At-power, internal, CDF and LERF	Update of plant specific failure data. Update for initiating event frequencies, component failure data, and maintenance unavailabilities using plant specific data collected though the end of 1998. Incorporated plant changes.	CDF: 1.48E-5 LERF:1.15E-6 There was a considerable reduction in CDF mainly due to reduction in the transient event frequency. The sum of frequencies of eight transient subcategories was reduced from 4.04/yr to 2.64/yr after the data update. Also, items updated during revision 0a, 0b, and 0c, especially the crediting of the plant Wilson switchyard for alternate AC power source, contributed to the reduction in CDF. The reduction in LERF was mainly due to reduced failure probabilities of some of the components, especially NSCW pumps, which have a significant contribution to the LERF after the Bayesian update of failure data using VEGP specific failure data.
Rev. 2c	PSA-V-00-030 by SNC, 11/2001	At-power, internal, CDF and LERF	Peer reviewed model by the WOG PRA peer review team. Revised the LERF model based on the new WOG LERF modeling guidelines. Updated the initiating event frequencies using the more recent generic data source (NUREG/CR-5750). Some SGTR scenarios were removed from the LERF scenarios and minor changes were made to facilitate RIS_B analysis. Removed circular logic in normal charging pump fault trees.	CDF: 1.602E-5, LERF:7.802E-8 The CDF decrease (rev.2a-> rev.2c) was mainly due to a decrease in LOCA frequencies after an update of initiating frequencies using NUREG/CR-5750 data. The decrease in LERF was due to the removal of some SGTR scenarios from the LERF model.

Table A-1: History of the Major VEGP PRA Model Updates

Model	Document No.	Scope	Updated Items	CDF and LERF
Rev. 3	PRA-BC-V-06-001, by SNC, 2/2006	At-power, internal, CDF and LERF	This is the most extensive upgrade of the VEGP PRA model since the IPE. • All level 1 PRA tasks, from the selection and grouping of initiating events to the final quantification were practically re-done. • Resolved all WOG PRA peer review B F&Os (there were no A F&O for VEGP).	CDF: 1.28E-5 LERF: 1.10E-7 The CDF changes were due to combined effects of many changes during revision 3. The main cause of the LERF increase (from Rev 2c -> Rev. 3) was the regrouping of all of the SGTR sequences back into the containment bypass scenarios, and the removal of the credit for mitigating systems for some ISLOCA scenarios (as resolutions of peer review findings).
VEGPL2UP model	P0293060001-2707 (ERIN report) by SNC and ERIN, 11/2006	At-power, internal, CDF and full level 2	Based on the Rev.3 level 1 PRA logic. This model was used for the Severe Accident Management Alternative Analysis for the VEGP license renewal which was submitted in 2007. Upgraded the full Level 2 PRA model, based on WCAP-16341-P guidelines which aims for producing an ASME PRA capability category II LERF model. Incorporated success terms in level 1 and level 2 logic. Corrected an error in the level 1 PRA failure data.	CDF: 1.552E-5 1.529E-5 (after treating success terms) LERF: 1.819E-7 The increase in CDF (before treating success terms) from revision 3 to VEGPL2UP model was due to a correction of RCP seal LOCA probability from WCAP-16141. The above LERF value is the sum of four LERF release categories: LERF-BYPASS, LERF-ISO, LERF-CFE, and LERF-SGTR.
Rev. 4	Under development	At power, internal, CDF and full level 2	The following items are complete: • Site review of initiating events list for gap closure. • Site review of event trees for gap closure. • Re-performed pre-initiator HFE screening for gap closure. • Re-performed internal flooding PRA	Under development

PRA Self Assessment and Peer Review

In addition to independent internal and external review during each VEGP PRA model development and update, several assessments of the technical capability have been made, and continue to be planned, for the VEGP PRA models. These assessments are as follows:

- An independent PRA peer review was conducted under the auspices of the Westinghouse Owners Group (WOG) in December 2001, following the Industry PRA Peer Review process [13]. This peer review included an assessment of the PRA model maintenance and update process.

- During 2005, the VEGP PRA model results were evaluated in the WOG PRA cross-comparisons study performed in support of implementation of the mitigating systems performance indicator (MSPI) process. Results of this cross-comparison are presented in WCAP-16464 [14]. The PRA Cross comparison Candidate Outlier Status was described in section 3.4 of VEGP MSPI base document [15]. Noted in this document was the fact that, after allowing for plant-specific features, there are no MSPI cross-comparison outliers for VEGP PRA.

- In 2006, a gap analysis was performed against the available versions of the ASME PRA Standard [16] and Regulatory Guide 1.200, Revision 0 (2003 trial version) [17].

All B facts and observations (F&Os) from the 2001 Industry PRA Peer Review for VEGP PRA [18] were addressed in VEGP PRA model revision 3 [10]. There were no A F&Os. Table A-2 shows the summary of disposition of B F&Os from the 2001 WOG peer review for VEGP PRA (details were documented as part of a VEGP PRA model revision 3 report).

Table A-2: Resolutions of VEGP PRA WOG Peer Review Level B Findings in VEGP PRA R3

F&O	Issues (All Significance Level B, no "A" F&O)	Resolutions in VEGP PRA Revision 3
IE-06	CCF NSCW pumps among pumps with different operating cycle &histories in special initiating events should be based on plant specific CCF analysis.	CCF of NSCW pumps with different operating cycles & histories were reevaluated through a detailed VEGP plant specific CCF analysis using NRC CCF Data base and by considering VEGP specific design features.
AS-04	The success state of ISLOCA and SGTR after 24 hours should be no core damage and "a stable" state.	Basically, for revision 3, the MAAP analyses for determination of the success criteria ran for 30 hours for most of the accident sequences. The 30 hour duration included 24 hours mission time, plus 6 additional hours. Generally, if core damage did not occur within 30 hours, it was assumed that core damage had been avoided. This approach would prevent sequences which would result in core damage just after the PRA mission time (24 hours) from being categorized as non-core damage sequences. Furthermore, the following modifications were made in ISLOCA and SGTR modeling: • Each ISLOCA potential path was re-examined using an event tree approach and identified ISLOCA paths were modeled as fault trees. The success state of ISLOCA was isolation of the ISLOCA path by closing (auto or manual) isolation valves before RWST depletion. Inventory makeup until the ISLOCA path is isolated is also required for the success. • If the ISLOCA break size was smaller than or equal to 1.0" in diameter, an additional success state was considered: the plant would be in stable condition if the RCS was cooled down and depressurized to minimize the leak with AFW and high pressure injection available. Once depressurized, the ECCS injection flow requirement would be minimal. For an ISLOCA path which could not be isolated by isolation valves and the break size was greater than 1" in diameter, core damage was assumed.

Table A-2: Resolutions of VEGP PRA WOG Peer Review Level B Findings in VEGP PRA R3

F&O	Issues (All Significance Level B, no "A" F&O)	Resolutions in VEGP PRA Revision 3
AS-04 (continued)	The success state of ISLOCA and SGTR after 24 hours should be no core damage and "a stable" state.	In revision3, the SGTR event tree was revised to more accurately reflect VEGP procedures and actual scenarios. For SGTR, obtaining a long term stable state was an issue only when the SG Valves stuck open after the SG was overfilled due to the failure of SG isolation because, if no recovery actions are taken, there would be a continuous primary-to-secondary-to-atmosphere leakage. The MAAP analysis for VEGP, for such a case, showed that core damage would not occur within 30 hours even when SG ARV or SVs stuck open (multiple valves stuck open) and all CCPs, SIPs, and 200% AFW flow are running. This was because VEGP has a relatively large RWST inventory (~700,000 gal). Thus, even without additional RWST water (refilling RWST), operators would have more than enough time to cool down and depressurize the RCS to stop or minimize the SG tube leak and stabilize the plant. MAAP analyses also showed that in the case of stuck open SG valves due to overfilling, continuous high pressure injection was not a critical mitigating function to prevent core damage. Core damage would not occur even after depletion of the RWST, as long as AFW was supplied. MAAP analyses showed that one CST (VEGP has two CSTs) will be enough to prevent core damage for about 35.5 hours. In revision 3, however, it was conservatively assumed that an additional AFW water source either from the secondary CST, or makeup from demineralized water tank (automatic or manual) would be required to prevent core damage, for such cases. With the additional AFW supply, the plant would be in a stable state well beyond 70 hours.

Table A-2: Resolutions of VEGP PRA WOG Peer Review Level B Findings in VEGP PRA R3

F&O	Issues (All Significance Level B, no "A" F&O)	Resolutions in VEGP PRA Revision 3
AS-05	For some ISLOCA paths, ECCS can not be credited. An ISLOCA through the RHR suction or injection lines may result in a leak rate much greater than 120 gpm (the leak rate was based on the assumption that the break occurs at the RHR pump seal) used in the VEGP IPE, if the RHR HX ruptures due to over-pressurization.	ISLOCA paths were re-identified using an event tree method and modeled as fully developed fault trees. Impacts of an ISLOCA to the mitigating systems were modeled in the ISLOCA core damage fault trees. For ISLOCA paths through RHR, it was assumed that the break location would be at the RHR HX and the size of the break was defined by the size of the piping in the path ways, a 6" diameter break for an ISLOCA though the RHR injection paths and a 12" diameter break for an ISLOCA through a hot leg suction line. For an ISLOCA through a RHR hot leg suction line, it was assumed that core damage would directly occur because it would cause a 12" diameter break and the path could not be isolated (there is no isolation valve between hot leg suction and RHR HX). ECCS operation would not affect the consequences. An ISLOCA in a RHR injection line would cause a 6" diameter LOCA. A 6" break (highest end of medium LOCA category) can be handled by 2 of 4 CCPs/SIPs until RWST depletion. In order to prevent core damage, however, operators must isolate the ISLOCA path by closing the RHR injection isolation motor operated valves. For the isolation to be successful, operators must close the required valves before the RWST is depleted. Core damage was assumed if operator failure or high pressure injection failure occurs. High pressure injection by the charging pumps or safety injection by the safety injection pumps was not credited in the ISLOCA scenarios, if any of the flow paths in the system were involved in the scenarios. For example, the safety injection system was not credited for inventory makeup for the ISLOCA through the cold leg injection lines of the safety injection system. Also, see the resolution to AS-04.
AS-08	Some SGTR sequences that were modeled as non-LERF scenarios may actually be LERF sequences.	All SGTR core damage sequences were included in LERF sequences with exceptions. The exceptions were SGTR-1, SGTR-2, and SGTR-3 sequences which were not considered as LERF sequence because MAAP analyses showed that without refilling RWST, and without having additional AFW water source, core damage would not occur within 30 hrs into the event (late core damage sequence)

Table A-2: Resolutions of VEGP PRA WOG Peer Review Level B Findings in VEGP PRA R3

F&O	Issues (All Significance Level B, no "A" F&O)	Resolutions in VEGP PRA Revision 3
DA-02	MGL factors used for evaluating VEGP IPE CCF probabilities seem to be too low as compared to generic industry data.	The VEGP Plant specific CCF analysis was redone using the NRC CCF Data Base, in order to estimate the VEGP specific CCF factors, while considering VEGP specific defenses against CCF events. The Alpha factor model, which is more statistically correct than the MGL method, was used for the update. VEGP specific environments, procedures, designs, operations, and measures implemented to prevent CCF were considered in the analysis.
DA-03	The same MGL factors were used for pump failure to start and failure to run CCFs.	The VEGP plant specific CCF analysis for the pumps, as well as other major components, was updated. CCFs for a pump failure to run were evaluated using only CCFs of pump failure to run events. CCFs for a pump failure to start were separately evaluated using only failure to start events. Pumps in different systems were evaluated separately.
DA-04	The probability of a safety valve to reclose after passing two phase flow should be higher than that after passing only steam in ATWT and SGTR overfill.	For ATWT, a higher number was used for PZR Safety Valves to fail to reseat because the PZR safety valves are not designed for passing two-phase flow. However, the PZR PORVs are designed for passing either steam or water (Table 5.4.13-1 of VEGP FSAR), thus their failure probability was not changed to a higher value. For SGTR overfill, it was conservatively assumed that SG overfill would cause the secondary side relief or safety valves to stick open.
HR-02	No reference analysis is available for operator action timing.	HRA was updated using the EPRI HRA-Calculator. Review of the training materials, interviews with operators and instructors, and timing information from VEGP specific MAAP analyses were used as inputs to the HRA update.

A gap analysis for VEGP PRA model revision 3 was completed in 2006. This gap analysis was performed against the available version of the ASME PRA Standard [16] and Regulatory Guide 1.200, revision 0 (2003 trial version) [17]. The summary of gap analyses and the impact of gap non-compliance on the VEGP RIS_B program are presented in Table A-3. Most of the gaps, except for uncertainty correlation, were related to documentation. It should be noted that since the gap analysis, the internal flooding PRA for VEGP was re-performed in 2008 in order to meet all capability category II requirements for internal flooding analyses. In addition, a self assessment by a third part was also performed and documented as part of the internal flooding PRA report [12] in order to ensure that all capability category II requirements for internal flooding analyses are being met. The VEGP RIS_B evaluation used the revised VEGP internal flooding PRA.

Following the VEGP PRA model revision 3, a major update of the level 2 PRA model was performed and the VEGP PRA L2UP model was issued in 2006. This update integrated the upgraded level1 PRA model from the VEGP RPA model revision 3 and the updated level 2 PRA model. The level 2 PRA model in the VEGP L2UP model was developed using new WOG level 2 PRA modeling guidelines, WCAP-16341-P "WOG Simplified Level 2 Modeling Guidelines". WCAP 16341-P aimed for developing an ASME PRA standard Capability Category II large early release frequency (LERF) PRA model. The VEGP PRA L2UP model was used for Severe Accident Mitigation Alternatives (SAMA) analysis for the VEGP license renewal submitted in 2007. The technical adequacy of the VEGP PRA L2UP model was discussed in the SAMA evaluation reports [8] and in the Responses to the Request for Additional Information (RAI) [9]. No additional PRA quality questions were asked by the NRC after the SNC sent the response to the RAI. Therefore, the VEGP PRA L2UP model which was used in the VEGP RIS_B evaluation is considered to be of sufficient quality for SAMA evaluation for license renewal.

Since the gap analysis for VEGP PRA model in 2006 was based on the 2003 trial version of Regulatory Guide 1.200, an additional analysis was performed to identify the differences in requirements and their impacts between the old version of RG 1.200, RG 1.200, revision 1 [19] and ASME PRA Standard RA-SB-2005 [20]. For internal flooding and LERF, no additional gap analyses were performed because the models had been developed to meet the ASME PRA standard capability category II and Regulatory Guide 1.200, Revision 1. Table A-4 summarizes the additional gap analysis results. No additional gaps were found; however, it was determined that the impact of non-compliance related to the treatment uncertainty correlation, especially in the interfacing system LOCA, needed to be investigated. A discussion of the uncertainty correlation is provided below after the tables.

Table A-3: Gap Analysis Summary and Current VEGP Compliance Status

#	Description	Applicable ASME SRs	Applicable F&Os	Current VEGP Compliance Status
1	Perform interviews with plant staff for potentially overlooked events and document results.	IE-A6	RG1.200	This gap has been closed.
2	Either use precursor data or document rationale for exclusion.	IE-A7	RG1.200	VEGP operating experiences were already used in identifying initiating events. The only item needed for completion is to enhance the documentation. Since there is only a documentation issue, failing to close this gap would not affect the conclusion made for this specific application.
3	Revise ISLOCA IE Calculation to account for correlated failure probabilities.	IE-C12	IE-02	Uncertainty correlation will be treated when a parametric uncertainty analysis is performed. The parametric uncertainty analysis has not been performed. This was investigated further for this application and found not to impact the HSS determination, and the risk acceptance criteria have been shown to be met even when conservative upper bound CCDP and CLERP values are used in the risk impact assessment.

Table A-3: Gap Analysis Summary and Current VEGP Compliance Status

#	Description	Applicable ASME SRs	Applicable F&Os	Current VEGP Compliance Status
4	Perform a systematic review of the model and its assumptions with knowledgeable plant personnel to ensure the model reflects the current operating experience, maintenance, and design.	AS-A4, AS-A5, SY-A2, SC-A8, SY-A20, SY-B6, SY-C2	SY-03	This is only a documentation issue because technically this gap has been closed by the following: • Event trees have been reviewed by A. Chan (former SRO) and the comments have been resolved. • Interviewed site personnel for HRA and event tree development. • Communicated with site personnel via e-mails to identify the current operations and practices. • Current drawing, procedures, documentation from SyncPowr (electronic data base for SNC) were used. • System models were reviewed by a review group which included VEGP personnel, PRA analysts, out side contractors. Since it is only a documentation issue, failing to close this gap would not affect the conclusion made for this specific application.
5	Check the screening assumptions used in the flooding analysis and ensure that the flooding events do not hamper an operator's ability to mitigate the event. Use realistic HEPs to model the probability of not isolating floods within 30 minutes. Further analysis needs to be made of floods that impact SSCs but do not trip the plant, as well as, as flood propagation into adjacent rooms.	AS-B3, SC-C1, SY-A4, SY-A19, SY-B9,	DE-01	(See note 1)

Table A-3: Gap Analysis Summary and Current VEGP Compliance Status

#	Description	Applicable ASME SRs	Applicable F&Os	Current VEGP Compliance Status
6	Ensure the new MAAP analyses and the HEP analyses are documented.	AS-C3, AS-C4	RG 1.200	This item has been closed. MAAP analyses have been documented as several separate calculations. HRA also has been documented as a separate report.
7	Develop documentation discussing shared systems between units.	SC-A4	RG 1.200	The only shared system credited is "cross tying an opposite unit DG". It was documented in an SBO event tree analysis. Thus, this item has been closed.
8	Although some searches have been performed to refine success criteria, guidance should be developed to broaden and formally document sensitivity analyses.	SC-B8,QU-D2, QU-D5, QU-F3	QU-01	This is only a documentation issue because extensive MAAP analyses were used in determining success criteria.
9	Fault tree modeling assumptions need to be readily available to support and document modeling decisions. For example, the discussion of AFW room cooling dependencies and operator response to its failure is not readily found.	SC-C1, SY-A4, SY-A17, SY-A18, SY-A20, SY-B8, SY-B9, QU-D2	SY-02	FT modeling assumptions are available in system note books. System notebooks may need to be enhanced. Since it is only a documentation issue, failing to close this gap would not affect the conclusion made for this specific application.
10	In the current PRA update ensure there is a reviewer signoff, indication of review performed, comments shown and incorporated, evidence of sensitivity analysis of important contributors, and detailed background of the source of each model change. In addition, the calc document should have more detail than the summary document.	SC-C1, SC-C4, SY-C1, SY-C3, QU-D3, QU-D5, QU-F1, QU-F2, LE-F1	MU-01	Most of the documentation is currently available. Some enhancement of documentation may be needed. Since it is only a documentation issue, failing to close this gap would not affect the conclusion made for this specific application.
11	Ensure that system notebooks or other supporting documentation defines system boundaries.	SY-A8	RG 1.200	System boundaries are defined and documented in system notebooks. System notebooks may need to be enhanced. Since it is only a documentation issue, failing to close this gap would not affect the conclusion made for this specific application.

Table A-3: Gap Analysis Summary and Current VEGP Compliance Status

#	Description	Applicable ASME SRs	Applicable F&Os	Current VEGP Compliance Status
12	Provide explicit documentation of the rationale for exclusions from modeling in accordance with the modeling.	SY-A12	RG 1.200	This information is in the system notebooks. System notebooks may need to be enhanced. Since it is only a documentation issue, failing to close this gap would not affect the conclusion made for this specific application.
13	System model enhancements should be considered such as adjacent pump discharge check valve failures due to close or gross back-leakage, strainer common cause, and traveling screen clogging.	SY-A13	SY-05	VEGP NSCW does not have traveling screens nor pump suction strainers because the NSCW pumps use the NSCW cooling tower basin for the suction source and makeup water to the cooling tower basin comes from clean well water. Therefore, this item is not applicable to VEGP. Potential for gross back leakage may be need to be investigated but their contributions to the major mitigating system failures would be small because a pump running failure should be combined with all check valves failures in the redundant trains.
14	Ensure the documentation of systems includes assumptions regarding which components have and have not been included in the model.	SY-A14	RG 1.200	Such information is in the system notebooks. System notebooks may need to be enhanced. Since it is only a documentation issue, failing to close this gap would not affect the conclusion made for this specific application.
15	Screen the system maintenance procedures in order to establish conditions where a pre-initiator could be present.	SY-A15, HR-A1, HR-A2, HR-A3, HR-B1, HR-B2, HR-C3, LE-E2	HR-01	Screening of Pre-initiator HFEs was documented in each system notebook. Documentation may need to be enhanced to integrally document pre-initiator screening. Since it is only a documentation issue, failing to close this gap would not affect the conclusion made for this specific application.

Table A-3: Gap Analysis Summary and Current VEGP Compliance Status

#	Description	Applicable ASME SRs	Applicable F&Os	Current VEGP Compliance Status
16	Ensure that system documentation includes details on what could cause a system to isolate or trip.	SY-A17	RG 1.200	Such information is in the system notebooks. System notebooks may need to be enhanced. Since it is only a documentation issue, failing to close this gap would not affect the conclusion made for this specific application.
17	Develop detailed documentation of mutually exclusive portion of the plant fault tree. If possible tie the structure to Tech Spec and other plant operating guidance	SY-A18, DA-A3, DA-C1, DA-C2, DA-C3, DA-C6, DA-C7, DA-C9, QU-B7	DA-01	Mutually exclusive event sets were developed based on Technical Specifications. Documentation needs to be enhanced. Since it is only a documentation issue, failing to close this gap would not affect the conclusion made for this specific application.
18	Ensure that system documentation includes specific conditions or requirements for room cooling because of room heatup concerns.	SY-A19	RG 1.200	This item has been closed
19	Ensure that system documentation does not take credit beyond the design basis without justification.	SY-A20	RG 1.200	This item is not applicable to VEGP PRA because no such credit was used in VEGP PRA. So failing to close this item has no impact on this specific application.
20	Ensure that system documentation addresses success criteria variability as a function of accident scenario.	SY-B6	RG 1.200	This item has been closed.
21	Confirm that system documentation does not eliminate support systems if the sole basis is the existence of recovery procedures for them.	SY-B13	RG 1.200	This item is not applicable to VEGP PRA because there is no such case in VEGP PRA. So failing to close this item has no impact on this specific application.
22	Provide documentation of procedure quality to support crew response within the times assigned in the models	HR-D3	RG 1.200	This item has been closed. Such information was provided as part of HRA update (one of the PSFs in the HRA-calculator).

Table A-3: Gap Analysis Summary and Current VEGP Compliance Status

#	Description	Applicable ASME SRs	Applicable F&Os	Current VEGP Compliance Status
23	Assign maximum credit for multiple recovery actions or provide justification for existing credit.	HR-D4, HR-G8	RG 1.200	This item is considered to be technically closed because: • Modeling recovery actions were based on Emergency Operating Procedures. • If MAAP results show that a recovery action is not feasible because of limited time, it was not credited. • Cutset level recovery allowed only one recovery. This item is now just a documentation issue. Since it is only a documentation issue, failing to close this gap would not affect the conclusion made for this specific application.
24	Provide documentation of "reasonableness" of HEPs.	HR-D7, HR-G6	RG 1.200	This item has been closed.
25	As part of next HRA Update, document the process used to identify post-initiator operator actions that are subjected to detailed evaluation.	HR-E2	HR-04	OAs were identified and described as part of the event tree analysis. Thus this item has been closed.
26	Add opposite unit hardware and outage unavailabilities to the model for the cross-tie, and perform a more detailed quantification of the operator action HEP. Also, add common cause across all 4 diesel generators.	HR-E2	HR-05	This item has been closed (cross tying an opposite unit EDG model is only the related case and it included operator error, EDG failure, CCF with other EDGs).
27	Document "talkthroughs" with plant staff to confirm that interpretations of procedures are consistent with plant observations and training procedures.	HR-E3	RG 1.200	This item has been closed.
28	Document simulator observations or "talkthroughs" to confirm response models	HR-E4, HR-G5	RG 1.200	This item has been closed.
29	Documentation should include the availability of cues and other indications for detection and evaluation of errors.	HR-F2	RG 1.200	This item has been closed.

Table A-3: Gap Analysis Summary and Current VEGP Compliance Status

#	Description	Applicable ASME SRs	Applicable F&Os	Current VEGP Compliance Status
30	Add a reference or basis for the time available to each operator action summary for actions included in the PRA model.	HR-F2, HR-G4	HR-02	MAAP analyses performed for determination of success criteria and operator action timing have been documented as separate calculations. Thus, this item has been closed.
31	Review components with generic failure rates to ensure that outliers (rarely tested or unlikely to be operated) do not use the same generic failure probabilities as components with more common testing and usage experience. Ensure that obvious outliers were not included in component grouping while collecting and processing data.	DA-B2	RG 1.200	Component data collections were done by systems. Thus, the obvious outliers were not included.
32	Ensure that in the latest revision that the component notebook provides the number of failures, demands, and operating hours used in the calculations, and provide assumptions or rules that form a "basis for identification of events as failures" as required by the standard.	DA-C4, DA-C6	RG 1.200	This item has been closed.
33	Ensure that in the latest version of the data notebook that any repeat failures are addressed.	DA-C5	RG 1.200	Repeated failures of similar components were examined during plant specific common cause failure analysis. Such information is available from the NRC CCF Data base analysis system. Thus, this item is considered to be closed. Documentation may need to be enhanced. Since it is only a documentation issue, failing to close this gap would not affect the conclusion made for this specific application.
34	Ensure that the current data notebook describes how completed and logged surveillance test data is used in the analysis. Also address tests that only exercise sub-elements of a component.	DA-C10	RG 1.200	Such information is in system notebooks. System notebooks may need to be enhanced. Since it is only a documentation issue, failing to close this gap would not affect the conclusion made for this specific application.

Table A-3: Gap Analysis Summary and Current VEGP Compliance Status

#	Description	Applicable ASME SRs	Applicable F&Os	Current VEGP Compliance Status
35	Ensure that the current data notebook verifies the review of component unavailability against its ability to mitigate an accident.	DA-C11	RG 1.200	Such information is in system notebooks. System notebooks may need to be enhanced. Since it is only a documentation issue, failing to close this gap would not affect the conclusion made for this specific application.
36	Ensure that the current data notebook addresses coincident outages based on plant experience.	DA-C13	RG 1.200	Coincident outage of NSCW fans (allowed by Tech Spec.) was included in the model. Thus this item has been closed.
37	Ensure that in the latest data notebook shows the sources of generic data and that plant components are identified when the generic data is applied.	DA-D2	RG 1.200	This item has been closed.
38	Develop a parametric uncertainty analysis of CDF and LERF.	DA-D3, QU-E3, QU-E4	QU-04	A parametric uncertainty analysis has not been performed. This has no impact on this application because the EPRI approach uses an order of magnitude approach to risk ranking and grouping, and the risk acceptance criteria have been shown to be met even when conservative upper bound CCDP and CLERP values are used in the risk impact assessment.
39	Ensure that in the current data notebook that tests are discussed for reasonableness of results.	DA-D4	RG 1.200	Failure data was collected by system engineers under the direction of PRA analysts.
40	Ensure that in the current data notebook that there is discussion of whether a change in maintenance practices has invalidated any historical data.	DA-D7	RG 1.200	For major Maintenance Rule (MR) scope components (pumps and EDGS), only the data after MR implementation was used. Thus, this item has been partially closed.
41	Consider expanding flood sources to include human induced failures such as maintenance errors, operator overfilling or draining.	IF-B2	RG 1.200	(See note 1)

Table A-3: Gap Analysis Summary and Current VEGP Compliance Status				
#	Description	Applicable ASME SRs	Applicable F&Os	Current VEGP Compliance Status
42	For breaks considered in VEGP Design Manual ensure that the nature of the break is characterized, (leak, rupture, spray) and its form.	IF-B3	RG 1.200	(See note 1)
43	Ensure supporting documentation considers flood build up and back flow, including flow into HVAC ducting or adjacent rooms.	IF-C1	RG 1.200	(See note 1)
44	Consider estimating flood frequencies and developing scenarios from them, e.g. loss of service water flood.	IF-D1	RG 1.200	(See note 1)
45	Provide documentation of an analysis of potential flooding precursors including the alignment of support systems.	IF-D2	RG 1.200	(See note 1)
46	If flooding initiating events are developed, care should be taken in grouping those with similar characteristics such as timing, plant response, and available mitigative equipment.	IF-D3	RG 1.200	(See note 1)
47	Describe the process for identifying or excluding potential multi-unit flood initiators.	IF-D4	RG 1.200	(See note 1)
48	When developing plant specific flooding initiators consider plant characteristics, design, expert judgment, and historical experience.	IF-D5	RG 1.200	(See note 1)
49	Modify documentation to list the assumptions used and the model changes made in order to model flood scenarios in Appendix B of the flooding report.	IF-E1, IF-E6, IF-F1	RG 1.200	(See note 1)
50	Ensure the VEGP Design Manual is part of the flooding analysis documentation package.	IF-E2, IF-F1	RG 1.200	(See note 1)
51	Develop scenario specific HEPs based on procedures, stress levels, plant conditions and uncertainty in scenario progression.	IF-E5	RG 1.200	(See note 1)

Table A-3: Gap Analysis Summary and Current VEGP Compliance Status

#	Description	Applicable ASME SRs	Applicable F&Os	Current VEGP Compliance Status
52	For quantified flood scenarios determine the contribution to LERF.	IF-E7	RG 1.200	(See note 1)
53	Perform or document LERF analysis, sensitivity analyses, and importance measures.	IF-F2	RG 1.200	(See note 1)
54	Perform a HFE dependency analysis when the current revision is in the final stages of completion.	QU-C2	RG 1.200	This item has been resolved.
55	A formally documented review and checking of results against other plants should be performed.	QU-D3, QU-D5, QU-F1, QU-F2, LE-F1	QU-05	The VEGP PRA model has been reviewed many times by site personnel; inter-PRA analysts, external contractors, PWROG peer review team, and MSPI peer teams. Thus failing to close this item will not affect this specific application.
56	The model documentation should address model limitations that may impact application.	QU-F6	RG 1.200	VEGP L2UP PRA model is for internal events at power level 1 and level 2 PRA model. Modeling limitations and uncertainties will not have an impact on this application because the EPRI approach uses an order of magnitude approach to risk ranking and grouping, and the risk acceptance criteria have been shown to be met even when conservative upper bound CCDP and CLERP values are used in the risk impact assessment.
57	Document rationale for UET treatment and AMSAC modeling changes.	LE-B3	AS-09	This item has been resolved.
58	Update the Level 2 analysis to include pre-core damage and post- core damage actions.	LE-C5, LE-C7, LE-C8, LE-C9	L2-01	This item has been resolved.
59	Revise ISLOCA IE Calculation to account for correlated failure probabilities	LE-D3	IE-02	Item #59 is the same as item#3

Note 1: There were no A or B F&Os for the internal flooding analysis from the previous VEGP PRA peer review. Even so, the internal flooding analysis has been re-performed in 2008 in order to meet all Capability Category II requirements for IF in the ASME PRA standard. A self assessment by a third party was also performed and all issues have been resolved and documented as a part of the revised internal flooding report [12]. None of the internal flooding scenarios were found to be risk significant.

Table A-4 Additional Gap Analysis Using RG 1.200 Rev 1[1),2)]

ASME PRA Standard SR Index No..	Requirement	Vogtle PRA L2UP model status	Impacts of non-compliance on RIS_B application
IE-C13	Characterize the uncertainties in the initiating event (IE) frequencies and provide mean values in the quantification of the PRA results	Partially met: Mean values were used for IEs modeled as single basic events. For IEs modeled as a fault tree, parametric uncertainty analysis needs to be performed.	A detailed parametric uncertainty analysis is not necessary for EPRI RIS_B methodology because it uses bounding PRA values. Uncertainty correlation needs to be investigated in interfacing system LOCA scenarios.
SY-A12a	Do not include beneficial failures	Met	NA
SY-A12b	Include those failures that can cause flow diversion pathways	Partially met.	Addressed as item 13 in the original gap analysis table.
SY-A18a	Include simultaneous unavailability of redundant equipments when this is a results of planned activity	Met	NA
HR-I2	Document details of human reliability analysis	Met:	NA
HR-I3	Document key assumptions and key sources of uncertainty	Partially met. Documentation of Pre-initiator human failure events screening needs to be enhanced	Negligible impacts.
DA-C11a	When an unavailability of a front line system component is caused by an unavailability of a support system, count it as support system unavailability	Met	NA
DA-D6a	In CCF analysis, screening both CCF events and independent events	Met	NA
DA-E2	Document Data Analysis details	Met	NA
DA-E3	Document key assumptions and key sources of uncertainty associated with the data analysis	Documentation needs to be enhanced	Negligible impacts
QU-A2a	Provide estimates of the individual sequences in a manner with the estimation of total CDF	Met. The fault tree linking modeling structure enables one to estimate any core damage sequence in the same manner as	NA

Table A-4 Additional Gap Analysis Using RG 1.200 Rev 1 [1), 2)]

ASME PRA Standard SR Index No..	Requirement	Vogtle PRA L2UP model status	Impacts of non-compliance on RIS_B application
		the total CDF is evaluated	
QU-A2b	Capability category II: Estimate the mean CDF from internal events accounting the uncertainty correlation	Parametric uncertainty analysis considering an uncertainty correlation is needed	Detailed parametric uncertainty analysis is not necessary for the EPRI RIS_B methodology because it uses bounding PRA values. The effect of the uncertainty correlation needs to be investigated.
QU-B7a	Identify cutsets containing mutually exclusive events in the results	Met. Mutually exclusive events cutsets were removed from mutually exclusive events logic during cutset generation	NA
QU-B7b	Correct castes containing mutually exclusive events	Met. Mutually exclusive events cutsets were removed from mutually exclusive events logic during cutset generation	NA
QU-D1a	Review a sample of significant accident sequences/cutsets sufficient to determine the logic of the cutset or sequence is correct	Met	NA
QU-D1b	Review of the results of the PRA for modeling consistency and operational consistency	Met	NA
QU-D1c	Review results to determine that the flag event settings, mutually event rules and recovery rules yield logical results	Met	NA
QU-D5a	For Capability Category II: Identify significant contributors to the CDF	Met	NA
QU-D5b	Review importance of components and basic events to determine that they make logical sense	Met	NA

1) SC-B6,SC-C4, SY-A23, and HR-G8 were removed from the ASME PRA standards and any gaps identified related to these requirement during the gap analysis based on RG1.200 2003 trial version need not to be closed
2) HR-D7 is no longer required for Capability Category II. Thus any gaps related to HR-D7 needs not to be closed for Capability Category II.

The gap analyses for VEGP PRA model (as summarized in Tables A-3 and A-4) identified that one gap related to the uncertainty correlation needs to be investigated. Considering the state of knowledge, an uncertainty correlation is especially important in estimating the Interfacing System LOCA. The point estimate for the VEGP interfacing system LOCA core damage frequency, which is also the large early release frequency for interfacing system LOCA case, was 3.03E-8/yr. In order to evaluate the impacts of not including an uncertainty correlation, a parametric uncertainty analysis was performed for the interfacing system LOCA core damage frequency (CDF) using EPRI's UNCERT code. The uncertainty correlation was evaluated by using the same sampled value for the same type of valve in the same system during Monte Carlo sampling in UNCERT. The following show the results for interfacing systems LOCA CDF:

Mean:	1.97E-07
5%:	3.76E-10
50%:	8.64E-09
95%:	3.81E-07
Std. Dev.:	3.32E-06

The use of an uncertainty correlation resulted in a significant increase in the mean value. However, the failure data for the rupture of a motor operated valve and that of check valve used in the VEGP L2UP PRA model were based on old generic failure data bases. The rupture failure rates for check valve and motor operator valves in the most recent failure data base, NUREG CR 6928[21], are almost an order of magnitude lower than those used in VEGP L2UP model. NUREG CR-6928 which was published in 2007 was based on more extensive collected data and more recent experiences. If the most recent data from NUREG CR 6928 is used, the results of uncertainty analysis for interfacing LOCA CDF are:

Mean:	3.46E-09
5%:	4.72E-13
50%:	3.47E-10
95%:	1.63E-08
Std. Dev.:	1.09E-08

Furthermore, even the use of the data from NUREG CR 6928 introduced a conservatism, because the VEGP PRA model assumed that the leakage rate would be the equivalent to the case when a valve disk is completely blown away, while the NUREG CR 6928 failure rate for check valves and motor operated valves are for those for leakage rates of 50 gpm or greater. For example, the VEGP PRA model assumed that if an interfacing system LOCA occurs through a RHR hot leg suction line , the leakage rate would be equivalent to that of 12" diameter line break. In such cases, use of the NUREG CR 6928 failure rate is conservative.

Therefore, even after considering the state of knowledge uncertainty correlation, the interfacing system LOCA CDF, which is the same as LERF for interfacing LOCA case, would be less than 1E-8/yr if the most recent failure data from NUREG CR 6928 is used.

General Conclusion Regarding PRA Capability

The VEGP PRA maintenance and update processes and technical capability evaluations described above provide a robust basis for concluding that the PRA is suitable for use in risk-informed licensing actions. As specific risk-informed PRA applications are performed, remaining gaps to specific requirements in the PRA standard will be reviewed to determine which, if any, would merit application-specific sensitivity studies in the presentation of the application results.

Assessment of PRA Capability Needed for Risk-Informed Inservice Inspection

In the risk-informed inservice inspection program at VEGP, the EPRI RIS_B methodology [Code Case N-716] is used to define alternative inservice inspection requirements. Plant-specific PRA-derived risk significance information is used during the RIS_B plan development to support the safety significance determination and delta risk evaluation steps.

The limited use of specific PRA results in the RIS_B process is also reflected in the risk-informed license application guidance provided in Regulatory Guide 1.174 [23].

Section 2.2.6 of Regulatory Guide 1.174 provides the following insight into PRA capability requirements for this type of application:

> *There are, however, some applications that, because of the nature of the proposed change, have a limited impact on risk, and this is reflected in the impact on the elements of the risk model.*
>
> *An example is risk-informed inservice inspection (RI-ISI). In this application, risk significance was used as one criterion for selecting pipe segments to be periodically examined for cracking. During the staff review it became clear that a high level of emphasis on PRA technical acceptability was not necessary. Therefore, the staff review of plant-specific RI-ISI typically will include only a limited scope review of PRA technical acceptability.*

Further, Table 1.3-1 of the ASME PRA Standard[1] [20] identifies the bases for PRA capability categories. The bases for Capability Category I for scope and level of detail attributes of the PRA states:

> *Resolution and specificity sufficient to identify the relative importance of the contributors at the system or train level including associated human actions.*

Based on the above, in general, Capability Category I should be sufficient for PRA quality for a RIS_B application.

In addition to the above, it is noted that welds are not eliminated from the ISI program on the basis of risk information. The risk significance of a weld may become low. However, it remains in the program, and if, in the future, the assessment of its ranking changes (either by damage mechanism or PRA risk) then it can again become a candidate for inspection. If a weld is determined, outside the PRA evaluation, to be susceptible to either flow-accelerated corrosion

[1] Table A-1 of Regulatory Guide 1.200 identifies the NRC staff position as "No objection" to Section 1.3 of the ASME PRA Standard, which contains Table 1.3-1.

(FAC), primary water stress corrosion cracking (PWSCC), or microbiological induced cracking (MIC) in the absence of any other damage mechanism, then it moves into an "augmented" program where it is monitored for those special damage mechanisms. That occurs no matter what the Risk Ranking of the weld is determined to be.

Conclusion Regarding PRA Capability for Risk-Informed ISI

The VEGP PRA models are suitable for use in the RIS_B application. This conclusion is based on:

- the PRA maintenance and update processes in place,
- the PRA technical capability evaluations that have been performed and are being planned, and
- the RIS_B process considerations, as noted above, that demonstrate the relatively limited reliance of the process on PRA capability.

References

1. "Generation and Maintenance of Probabilistic Risk Assessment Models and Associated Updates," NL-PRA-001 Version 3.0, SNC, 2008.
2. "Collection, Evaluation, and Documentation of Baseline PRA Update Information," NL-PRA-002 Version 2.0, SNC, 2008.
3. "Structures, Systems, and Component Risk Significance Evaluation Procedure for Maintenance Rule," NL-PRA-004 Version 2.0, SNC, 2008.
4. "PRA Calculation, - Preparation and Revision," NL-PRA-008 Version 2.0, SNC, 2008.
5. "PRA Calculation Administration," NL-PRA-009 Version 2.0, SNC, 2008.
6. "PRA Software Application Control," NL-PRA-010 Version 2.0, SNC, 2008.
7. "Development of Level 2 PRA model for VEGP (Vogtle L2UP PRA model)," ERIN P0293060001-2707, ERIN for SNC, 2006.
8. "VEGP Application for License Renewal Applicant's Environmental Effects Appendix F Severe Accident Mitigation Alternatives," ERIN for SNC, 2007.
9. "SNC's response to NRC's RAI relating to results of the SAMA analyses," RBA 07-017-V revision 0, SNC, 2007.
10. "VEGP PRA Model Revision 3," PRA-BC-V-06-001, SNC, 2006.
11. "WOG Simplified Level 2 Modeling Guidelines," WCAP-16341-P, Westinghouse, 2005.
12. "VEGP Internal Flooding Probabilistic Risk Assessment," ABS 1712171-R-003, ABS for SNC, 2008.
13. "Probabilistic Risk Assessment (PRA) Peer Review Process Guidance," NEI-00-02, 2000.
14. "Westinghouse Owner's Group Mitigating Systems Performance Index Cross Comparison," WCAP-16464-NP, Revision 0, August 2005.
15. "NRC Mitigating System Performance Index Base Document VEGP Units 1 and 2 Version 1," SNC, 2006.
16. "Standard for Probabilistic Risk Assessment for Nuclear Power Plant Applications, ASME RA-S-2002, April 2002 and Addenda to Standard for Probabilistic Risk Assessment for Nuclear Power Plant Applications," ASME RA-Sa-2003, American Society of Mechanical Engineers 2003.
17. "An Approach for Determining the Technical Adequacy of Probabilistic Risk Assessment Results for Risk-Informed Activities," Regulatory Guide 1.200, trial version, U.S. Nuclear Regulatory Commission, 2003.
18. "VEGP PRA Peer Review Report," WOG, 2002.
19. "An Approach for Determining the Technical Adequacy of Probabilistic Risk Assessment Results for Risk-Informed Activities," Regulatory Guide 1.200, Revision 1, U.S. Nuclear Regulatory Commission, 2007.
20. "ASME RA-Sb-2005 Addenda to ASME RA-2 Standard for Probabilistic Risk Assessment for Nuclear Power Plant Applications," American Society of Mechanical Engineers, 2007.

21. "Industry-Average Performance for Components and Initiating Events at U.S. Commercial Nuclear Power Plants," NUREG/CR 6928, Idaho National Laboratory for the US NRC, 2007.

22. "Revised Risk-Informed Inservice Inspection Evaluation Procedure," EPRI TR-112657, Revision B-A, December 1999.

23. "An Approach for Using Probabilistic Risk Assessment in Risk-Informed Decisions on Plant-Specific Changes to the Licensing Basis," Regulatory Guide 1.174, Revision 1, U.S. Nuclear Regulatory Commission, November 2002.

Plant Site - Unit: Vogtle Electric Generating Plant (VEGP) - Unit 2.

Interval-Interval Dates: 3rd ISI Interval, May 31, 2007 through May 30, 2017.

Requested Date for Approval: Approval is requested by May 1, 2010, to support examinations scheduled during the summer of 2010.

ASME Code Components Affected: VEGP-2 tendon strands.

Applicable Code Edition and Addenda: ASME Section XI, 2001 Edition through the 2003 Addenda.

Applicable Code Requirement: IWL-2523 requires that a strand sample be examined and tested.

IWL-2523.1 requires that one sample tendon, from each type, be detensioned completely and a single strand removed from each detensioned tendon.

IWL-2523.2 requires that the strands selected in IWL-2523.1 are tension tested and examined for corrosion and mechanical damage.

Impracticality of Compliance: The VEGP Unit 2 post-tensioning system was designed so that no tendons can be detensioned without creating voids in the sheathing filler material. VEGP was originally licensed so that tendon lift-off and strand testing would be performed on Unit 1 only.

Therefore, relief from the Code requirements should be granted under 10 CFR 50.55a(g)(6)(i) based on impracticality. The Unit 2 containment post tensioning system can not be modified to allow for compliance with the code requirements. The proposed alternative, which is based on testing that was approved by the NRC, ensures that the structural integrity of the containment is being maintained.

Burden Caused by Compliance:

The current Unit 2 containment configuration does not provide for compliance with the code requirements and the post tensioning configuration can not be modified to allow for compliance.

Proposed Alternative and Basis for Use:

1. VEGP will perform lift-off testing on the Unit 2 tendons in accordance with IWL-2520.
2. The strands selected during lift-off testing of Unit 1 will be credited for Unit 2.

Post tensioning VEGP Unit 1 was completed in April, 1986 (4/26/86) and Unit 2 in December, 1986 (12/3/86). Therefore, the VEGP containments meet the criteria of IWL-2421(a) for sites with multiple plants. Therefore, performance of IWL-2520 exams on Unit 2 while crediting Unit 1 strand testing for Unit 2 provides reasonable assurance of structural integrity of the Unit 2 unbonded post tensioning system.

Duration of Proposed Alternative:

3rd ISI Interval, May 31, 2007 through May 30, 2017.

Precedents:

An equivalent Relief Request (RR-L-3) was previously approved.

References:

NRC Safety Evaluation dated June 16, 2000 – TAC NOS. MA5314 AND MA5315.

Status:

Awaiting NRC approval.

ENCLOSURE 3

NRC SAFETY EVALUATIONS

Table of Contents

Alternative ID#	Date NRC Approved	Adams #'s	Remarks
ISI-GEN-ALT-07-01, Ver. 2.0	3-10-08	ML080580291	FSWOL Application
VEGP-ISI-ALT-01, Ver. 1.0	7-6-09	ML091660654	FSWOL ISI Examination

SAFETY EVALUATION REPORT BY THE OFFICE OF NUCLEAR REACTOR REGULATION

PROPOSED ALTERNATIVE ISI-GEN-ALT-07-01, VERSION 2.0

WELD OVERLAY OF PRESSURIZER NOZZLES

JOSEPH M. FARLEY NUCLEAR PLANT, UNIT 2

VOGTLE ELECTRIC GENERATING PLANT, UNIT 1

SOUTHERN NUCLEAR OPERATING COMPANY

DOCKET NUMBERS 50-364 and 50-424

1.0 INTRODUCTION

By letter dated July 24, 2007 (Agencywide Documents Access and Management System (ADAMS) Accession No. ML072060283), Southern Nuclear Operating Company (the licensee) proposed alternative ISI-GEN-ALT-07-01, Version 1.0, to repair dissimilar metal welds associated with the pressurizer nozzles at Farley Nuclear Plant Unit 2 (FNP-2) and Vogtle Electric Generating Plant Unit 1 (VEGP-1). Alternative ISI-GEN-ALT-07-01, Version 1.0, uses a full structural weld overlay to repair dissimilar metal welds on a contingency and preemptive basis. The proposed approach is an alternative to the requirements of American Society of Mechanical Engineers (ASME) Boiler and Pressure Vessel Code, Section XI.

By letter dated December 26, 2007 (ADAMS Accession No. ML073610061), the licensee submitted revised alternative, ISI-GEN-ALT-07-01, Version 2.0, based on its response to the staff's request for additional information.

By letter dated August 10, 2006 (ADAMS Accession No. ML062220586), as supplemented by letters dated October 20, 2006 (ADAMS Accession No. ML062960237), January 3, 2007 (ADAMS Accession No. ML070040355), and February 21, 2007 (ADAMS Accession No. ML070540416), the licensee submitted proposed alternative ISI-GEN-ALT-06-03 to use a full-structural weld overlay to mitigate or repair dissimilar metal welds on a contingency and preemptive basis and to overlay adjacent similar metal welds when necessary.

By letter dated March 8, 2007, the U.S. Nuclear Regulatory Commission (NRC) staff authorized the use of Alternative ISI-GEN-ALT-06-03, Revision 2 (ADAMS Accession No. ML070600246). Subsequently, by letter dated March 15, 2007 (ADAMS Accession No. ML070750077), the licensee requested relief from the requirements of the NRC-approved ISI-GEN-ALT-06-03, Revision 2, to change the frequency of interpass temperature measurements.

By letter dated April 3, 2007, the NRC authorized the alternate frequency for interpass temperature monitoring in ISI-GEN-ALT-06-03, Revision 2 (ADAMS Accession No. ML070790240).

The NRC-approved alternative ISI-GEN-ALT-06-03, Revision 2, has expired. Therefore, the licensee submitted alternative ISI-GEN-ALT-07-01, Version 2.0 to complete the weld overlay campaigns in FNP-2 and VEGP-1. The proposed alternative ISI-GEN-ALT-07-01, Version 2.0, is based on the technical requirements of NRC-approved alternative ISI-GEN-ALT-06-03, Revision 2.0.

The dissimilar metal butt weld joins the ferritic (i.e., carbon steel) pressurizer nozzle to the austenitic stainless steel safe end and is made of nickel-based Alloy 82/182. The industry has experienced degradation of the Alloy 82/182 weld material which is susceptible to primary water stress corrosion cracking (PWSCC) in the pressurized water reactor environment. The weld overlay repair is a process by which a PWSCC-resistant weld metal (such as Alloy 52 or 52M) is deposited on the outside surface of the degraded dissimilar metal weld as a new pressure boundary.

2.0 REGULATORY EVALUATION

Pursuant to Title 10 of the *Code of Federal Regulations* (10 CFR) Section 50.55a(g)(4), ASME Code Class 1, 2, and 3 components (including supports) must meet the requirements, except the design and access provisions and the preservice examination requirements, set forth in the ASME Code, Section XI, "Rules for Inservice Inspection (ISI) of Nuclear Power Plant Components," to the extent practical within the limitations of design, geometry, and materials of construction of the components. The regulations require that inservice examination of components and system pressure tests conducted during the first 10-year interval and subsequent intervals comply with the requirements in the latest edition and addenda of Section XI of the ASME Code incorporated by reference in 10 CFR 50.55a(b) 12 months prior to the start of the 120-month interval, subject to the limitations and modifications listed therein.

Pursuant to 10 CFR 50.55a(a)(3), alternatives to requirements may be authorized by the NRC if the licensee demonstrates that: (i) the proposed alternatives provide an acceptable level of quality and safety, or (ii) compliance with the specified requirements would result in hardship or unusual difficulty without a compensating increase in the level of quality and safety.

Farley Unit 2 is in the fourth ISI interval. Vogtle unit 1 is in the third ISI interval. The Code of record for FNP-2 and VEGP-1 is the ASME Section XI, 2001 edition through 2003 addenda. In addition, as required by 10 CFR 50.55a, performance demonstration examination of the welds will be based on Appendix VIII to the ASME Section XI, 2001 edition.

3.0 PROPOSED ALTERNATIVE ISI-GEN-ALT-07-01, Version 2.0

3.1 ASME Code Components Affected

Vogtle Unit 1

Dissimilar Metal Welds	Similar Metal Welds
11201-V6-002-W17 (Relief)	11201-059-1 (Relief)
11201-V6-002-W18 (Safety)	11201-056-1 (Safety)
11201-V6-002-W19 (Safety)	11201-057-1 (Safety)
11201-V6-002-W20 (Safety)	11201-058-1 (Safety)

11201-V6-002-W21 (Spray)	11201-030-45 (Spray)
11201-V6-002-W22 (Surge)	11201-053-6 (Surge)

Farley Unit 2

Dissimilar Metal Welds	Similar Metal Welds
APR1-4205-49DM (Spray)	APR1-4205-48 (Spray)
APR1-4501-1DM (Safety)	APR1-4501-2 (Safety)
APR1-4502-1DM (Safety)	APR1-4502-2 (Safety)
APR1-4503-1DM (Safety)	APR1-4503-2 (Safety)
APR1-4504-1DM (Relief)	APR1-4504-2&3 (Relief)

3.2 Applicable Code Edition and Addenda

The current code of record for Farley Unit 2 and Vogtle Unit 1 is ASME Code, Section XI, 2001 edition through 2003 addenda. In addition, as required by 10 CFR 50.55a, ASME Code, Section XI, 2001 edition, is used for Appendix VIII, "Performance Demonstration for Ultrasonic Examinations."

3.3 Applicable Code Requirements

Subarticle IWA-4110 of the ASME Code, Section XI requires that repairs of welds shall be performed in accordance with Article IWA-4000. Subarticle IWA-4300 requires that defects be removed or reduced to an acceptable size.

Currently, pressurizer weld examinations are performed at the Vogtle and Farley nuclear plants using a Risk-Informed Program (Category R-A) that has been approved by the NRC. The examinations performed are the same as those volumetric examinations specified in Section XI, Table IWB-2500-1, Category B-J and B-F. After the installation of the weld overlays, the similar and dissimilar metal welds will no longer be included in the Risk-Informed ISI population, but will be examined in accordance with this proposed alternative.

3.4 Proposed Alternative and Basis

In lieu of using IWA-4000 of the ASME Code, Section XI, the licensee proposes to use the alternative for the design, fabrication, pressure testing, and examination of the weld overlays. VEGP-1 is scheduled to have preemptive full-structural weld overlays (FSWOLs) applied during the spring 2008 refueling outage. The licensee does not plan to perform ultrasonic examinations of the similar or dissimilar metal welds prior to the installation of the preemptive FSWOLs. Four of the six dissimilar welds on VEGP-1 have coverage less than 50 percent and for the other two dissimilar metal welds that are examinable, it is estimated about 0.6 Rem would be required to perform the examinations.

FNP-2 is scheduled for preemptive FSWOLs of the remaining welds during the spring 2010 refueling outage. The licensee does not plan to perform ultrasonic examinations of the similar or dissimilar metal welds prior to the installation of the preemptive FSWOLs. The licensee performed ultrasonic examinations on each of the six FNP-2 dissimilar metal butt welds during the spring 2007 refueling outage. As a result of ultrasonic indications detected in the surge

nozzle dissimilar metal weld, the weld was overlaid per alternative ISI-GEN-ALT-06-03. In addition, the licensee examined two pressurizer dissimilar metal butt welds at FNP-2 during the fall 2005 outage with no evidence of PWSCC. For the remaining five dissimilar metal welds, it is estimated that about 0.5 Rem would be required to perform the examinations.

If through-wall leakage is detected by visual examination on any of the Farley or Vogtle pressurizer Alloy 82/182 safe-end welds, a contingency FSWOL will be applied. In lieu of performing ultrasonic examinations, the flaw will be assumed to be 100 percent through the original wall thickness for the entire circumference. Flaw characterization will be based on the as-found flaw size as discussed in section 2(a) of Alternative ISI-GEN-ALT-07-01, Version 2.0.

Due to the proximity of the adjacent similar metal piping welds, preemptive or contingency overlay of the safe-end welds may preclude the examination of the adjacent similar metal piping weld(s); therefore, the overlay will be extended over the adjacent similar metal piping welds, as necessary. This is expected to include all adjacent similar metal welds with the possible exception of those on the surge lines, where there may be sufficient separation between the dissimilar metal weld and the similar metal weld to allow examination of the similar metal weld after the dissimilar metal weld is overlaid. FNP-2 similar metal welds APR1-4504-2 and APR1-4504-3 are only a few inches apart; therefore, both welds may be overlaid along with the dissimilar metal weld.

This proposed alternative meets the technical requirements previously set forth in the April 3, 2007, NRC safety evaluation (SE) for alternative ISI-GEN-ALT-06-03, Revision 2.0 (as supplemented by letter dated March 15, 2007) with the single exception that the start of the 48-hour clock prior to performing examinations has been revised. This change to the start of the 48-hour clock has previously been approved by the NRC for Arkansas Nuclear One-Unit 1; therefore, this proposed alternative does not contain any technical content that has not already been approved by the NRC.

3.5 Duration of the Alternative

The proposed alternative is applicable to VEGP-1 from May 31, 2007, through May 30, 2017, and applicable to FNP-2 from December 1, 2007, through November 30, 2017.

4.0 STAFF EVALUATION

The methodology and associated requirements for the weld overlay design in proposed alternative ISI-GEN-ALT-07-01, Version 2.0, are similar to Code Case N-740, "Dissimilar Metal Weld Overlay for Repair of Class 1, 2, and 3 Items Section XI, Division 1" of the ASME Code, Section XI. Code Case N-740 combines the requirements of Code Case N-504-2, "Alternative Rules for Repair of Class 1, 2, and 3 Austenitic Stainless Steel Piping Section XI, Division 1," and N-638-1, "Similar and Dissimilar Metal Welding Using Ambient Temperature Machine GTAW [gas tungsten arc welding] Temper Bead Technique Section XI, Division 1."

The NRC staff has not yet adopted Code Case N-740. The NRC staff evaluated the proposed alternative based on the requirements of Code Case N-504-3 and N-638-1 which the NRC has endorsed in Regulatory Guide (RG) 1.147, Revision 15 which is incorporated by reference in 10 CFR 50.55a. In RG 1.147, Revision 15, the NRC staff imposed a condition on the use of

Code Case N-504-3 that the requirements of Appendix Q to the ASME Code, Section XI, shall also be applied.

Although weld overlay of similar metal butt welds will be performed as part of weld overlay of the Alloy 82/182 welds, the licensee did not ask relief from the ASME requirements for weld overlay of the similar metal welds. Therefore, similar metal welds will not be discussed extensively and will not be part of the NRC's safety evaluation.

As the licensee stated above, proposed alternative ISI-GEN-ALT-07-01, Version 2.0, meets the proposed alternative ISI-GEN-ALT-06-03, Revision 2.0 (as supplemented by licensee's letter dated March 15, 2007) with the single exception that the start of the 48-hour clock prior to performing examinations of the weld overlay has been revised. Although the weld overlay issues have been resolved in the review of ISI-GEN-ALT-06-03, Revision 2.0, some of the issues will be discussed in this SE for the purpose of updating the issue and providing regulatory traceability.

4.1 General Requirements

The licensee stated that when components subject to being overlaid contain levels of trace chemicals (e.g., sulfur) that could cause unacceptable indications in the Alloy 52/152 weld, an initial layer of low carbon (maximum 0.035 percent) austenitic stainless steel may be applied as a buffer between the base metal and the Alloy 52/152 overlay. This buffer will be considered as a "non-credited" layer, i.e., the thickness of the buffer layer will not be considered as part of the total weld overlay thickness. The buffer layer will provide an acceptable chemical composition to apply the FSWOL. Depending on the chemical composition of the base materials where the weld overlay is to be applied, there may be different ways to apply the first layer of weld material. The licensee considered the effects of the buffer layer on the requirements previously set forth in this alternative. Significant points are:

1. The licensee stated that Code Case N-740, from which this alternative is derived, provides a methodology for the application of low carbon austenitic stainless and austenitic nickel alloys.

2. The licensee will not include this non-credited buffer layer in [weld overlay thickness] calculations required by this alternative. This means that the actual weld overlay will be thicker than the design thickness and therefore is conservative.

3. Because the FSWOL over the Alloy 82/182 dissimilar metal weld will continue to consist of Alloy 52/152, there will be no effect on the ability of the overlay to stop the progress of PWSCC. The Alloy 52/152 weld overlay will continue to provide resistance to PWSCC considering the buffer layer.

4. The licensee and Electric Power Research Institute (EPRI) nondestructive examination (NDE) personnel reviewed the geometry of the weld overlay design and indicated that there will be no appreciable effect on the performance of ultrasonic examinations.

5. The licensee stated that no effects detrimental to the structure will be introduced by addition of the non-credited buffer layer.

6. Prior to deposition of the non-credited buffer layer, the surface will be examined by the liquid penetrant method. The licensee stated that indications larger than 1/16-inch shall be removed, reduced in size, or corrected in accordance with the following requirements: (a) The licensee stated that one or more layers of weld metal shall be applied to seal unacceptable indications in the area to be repaired, with or without excavation. The thickness of these layers shall not be used in meeting weld reinforcement design thickness requirements. Peening the unacceptable indication prior to welding is permitted (b) If correction of indications is required, the area where the weld overlay is to be deposited, including any local repairs or initial weld overlay layer, shall be examined by the liquid penetrant method. The area shall contain no indications greater than 1/16-inch prior to the application of the structural layers of the weld overlay.

   The NRC staff notes that many licensees have successfully applied the buffer layers to the stainless steel base metal prior to applying weld overlay as a means of preventing cracking in the Alloy 52/152 weld filler metal when applied to stainless steel base metal. The staff finds that the installation of the "non-credited" buffer layer on the base metal is acceptable because the buffer layer prevents cracking of alloy 52/152 on austenitic stainless steel base metal, does not affect the ability of the Alloy 52/152 weld overlay to mitigate potential PWSCC in the base metal, and does not affect ultrasonic examination of the weld overlay.

4.2 Crack Growth Considerations and Design

Section 2, *Crack Growth Considerations and Design*, of the proposed alternative provides the requirements for overlay design and the crack growth calculation. For a contingency weld overlay repair, the proposed alternative requires that flaw characterization and growth calculations be based on the as-found flaw(s) in the original weld. For the preemptive weld overlay, the crack growth calculation will be based on an initial flaw with a depth of 75 percent and a circumference of 360 degrees in length because the 75 percent through wall depth flaw is the largest flaw that could remain undetected during the FSWOL preservice examination.

The licensee will perform a preservice volumetric examination after application of the overlay using an ASME Code, Section XI, Appendix VIII [as implemented through the performance demonstration initiative (PDI)] examination procedure. This examination will verify that there is no cracking in the upper 25 percent of the original weld and base material. The PDI procedure is not qualified to examine the lower 75 percent of the pipe wall thickness. Therefore, a conservative approach is that a 75 percent through-wall crack is assumed to exist in the lower 75 percent of the pipe wall thickness. If no flaws were identified in the upper 25 percent of the original weld during preservice examination, the flaw depth for crack growth calculation would be 75 percent through-wall in the original weld. If any crack-like flaws are found during the preservice examination in the upper 25 percent of the original weld or base metal, the licensee will use an analyzed flaw (the postulated 75 percent through wall flaw plus the portion of the as-found flaw in the upper 25 percent) for the crack growth calculation. The NRC staff finds that after weld overlay installation, the licensee provided a conservative assumption of a 75 percent though-wall crack in the weld region where PDI is not qualified. The NRC staff also finds the assumption of the as-found flaw site plus the postulated 75 percent through-wall flaw is a conservative crack growth calculation.

With respect to the design of the FSWOL, the thickness of the overlay will be the same for preemptive and contingency FSWOLs and is calculated based on the assumption of a 100 percent through-wall flaw, with a length of 360 degrees in the underlying pipe. The overlay is applied so that the criteria of IWB-3640 of the ASME Code, Section XI, are met after the overlay is applied.

The proposed alternative requires that effects of any changes in applied loads, as a result of weld shrinkage from the entire overlay, on other items in the piping system (e.g., support loads and clearances, nozzle loads, changes in system flexibility and weight due to the weld overlay) shall be evaluated. The licensee is required to perform a stress analysis to demonstrate that the pressurizer nozzles will perform their intended design function with the FSWOL installed. The stress analysis report will include results showing that the requirements of Subarticles NB-3200 and NB-3600 of the ASME Code, Section III are satisfied. The stress analysis will also include results showing that the requirements of IWB-3000 of the ASME Code, Section XI, are satisfied. The results will show that the postulated crack including its growth in the nozzles will not adversely affect the integrity of the overlaid welds. This analysis will be provided to the NRC prior to entering Mode 4. The licensee will also confirm that the original leak-before-break analyses are valid after the weld overlay installation, the amount of shrinkage is determined, and the shrinkage stresses are calculated.

The staff finds that the proposed weld overlay design, crack growth calculations, and stress analyses are acceptable because they are consistent with Code Case N-504-3 and NRC staff's position.

4.3 Examination and Inspection

Section 3, *Examination and Inspection,* of the proposed alternative provides the requirements for acceptance, preservice and inservice examinations after the weld overlays are installed. The proposed requirements are consistent with Code Case N-504-3 with the following exceptions. The NRC staff notes that the licensee addressed the exceptions and many issues that the NRC staff raised in the review of alternative ISI-GEN-ALT-06-03, Revision 2. The discussion and disposition of the issues are provided in the NRC's safety evaluation in the March 3, 2007 letter to the licensee.

The licensee stated that NDE methods shall be in accordance with IWA-2200, except as specified herein. NDE personnel shall be qualified in accordance with IWA-2300. Ultrasonic examination procedures and personnel shall be qualified in accordance with Appendix VIII, Section XI, as implemented through the PDI. The licensee will use Appendix VIII of the 2001 Edition of the ASME Code, Section XI, for the ultrasonic examination of the weld overlays. The licensee noted that the PDI Program Status for Code Compliance and Applicability developed in June 2005 indicates that the PDI Program is in compliance with Appendix VIII, 2001 Edition of Section XI as amended and mandated by 10 CFR 50.55a, Final Rule dated October 1, 2004 (69 FR 58804). The staff finds that the proposed alternative's requirements regarding ultrasonic examination under the PDI program is consistent with 10 CFR 50.55a and, therefore, is acceptable.

4.3.1 Acceptance Examination

Section 3(a), *Acceptance Examination of the Overlay*, of the proposed alternative, requires surface and ultrasonic examinations of an installed weld overlay and use the acceptance criteria of NB-5300 of the ASME Code, Section III. The ultrasonic examinations of the installed weld overlay will be performed to assure adequate fusion and to detect fabrication defects. The required examination surface and volume are defined in Figure 1 of the proposed alternative. The acceptance criteria for the ultrasonic examination will be based on IWB-3514-2 of the ASME Code, Section XI. Any planar indication found in the FSWOL that is rejected by IWB-3514-2 will be removed. The NRC staff finds that the licensee's alternative is acceptable because removal of unacceptable indication(s) in accordance with IWB-3514-2 is consistent with the staff position.

Paragraph 3(a)3 of the proposed alternative requires that if ambient temperature temperbead welding is used, the ultrasonic examination be conducted at least 48 hours after the third layer of the weld overlay has been completed. However, Code Case N-638-1 requires that the 48-hour clock starts after the overlay is cooled to ambient temperature. The proposed 48-hour requirement is not as stringent as Code Case N-638-1 because the licensee could perform the surface and ultrasonic examinations earlier than the code case requirement. The 48-hour delay in N-638-1 was provided to allow sufficient time for hydrogen cracking to occur (if it is to occur) in the heat affected zone (HAZ) of ferritic materials prior to performing examinations, to ensure detection by NDE.

The licensee stated that based on research and industry experience, EPRI has provided a technical basis for starting the 48-hour hold after completion of the third temperbead weld layer rather than waiting for the weld overlay to cool to ambient temperature. Weld layers beyond the third layer are not designed to provide tempering to the ferritic HAZ during ambient temperature temperbead welding. EPRI has documented their technical basis in Technical Update report 1013558, "Repair and Replacement Applications Center: Temperbead Welding Applications 48-Hour Hold Requirements for Ambient Temperature Temperbead Welding" (ADAMS Accession No. ML070670060). The technical data provided by EPRI in their report is based on testing performed on SA-508, Class 2 low-alloy steels, which is the material of the FNP and VEGP pressurizer nozzles. After evaluating all of the issues relevant to hydrogen cracking such as microstructure of susceptible materials, availability of hydrogen, applied stresses, temperature, and diffusivity and solubility of hydrogen in steels, EPRI concluded that: ". . .[t]here appears to be no technical basis for waiting the 48 hours after cooling to ambient temperature before beginning the NDE of the completed weld. There should be no hydrogen present, and even if it were present, the temperbead welded component should be very tolerant of the moisture. . ." EPRI also notes that over 20 weld overlays and 100 repairs have been performed using temperbead techniques on low alloy steel components over the last 20 years. During this time, there has never been an indication of hydrogen cracking by the NDE performed after the 48-hour hold or by subsequent ISI examinations.

In addition, the ASME Technical Basis Paper (ADAMS Accession No. ML070790679) points out that the introduction of hydrogen to the ferritic HAZ is limited to the first weld layer since this is the only weld layer that makes contact with the ferritic base material. While the potential for the introduction of hydrogen to the ferritic HAZ is negligible during subsequent weld layers, these layers provide a heat source that accelerates the dissipation of hydrogen from the [ferritic] HAZ in non-water backed applications. The Technical Basis Paper concludes that there is sufficient

delay time to facilitate the detection of potential hydrogen cracking when NDE is performed 48 hours after completion of the third weld layer.

Furthermore, the solubility of hydrogen in austenitic materials such as Alloy 52M is much higher than that of ferritic materials while the diffusivity of hydrogen in austenitic materials is lower than that of ferritic materials. As a result, hydrogen in the ferritic HAZ tends to diffuse into the austenitic weld metal, which has a much higher solubility for hydrogen. This diffusion process is enhanced by heat supplied in subsequent weld layers.

On the basis of information submitted, the staff finds that it is not necessary to wait 48 hours after the completed overlay has reached ambient temperature to perform NDE because any delayed hydrogen cracking, were it to occur, is expected to occur within the 48 hours following completion of the third temper bead weld layer. Therefore, the staff concludes that NDE of the weld overlay 48 hours after completion of the third temper bead weld layer is acceptable.

Paragraph 3(a)2 of the proposed alternative requires that the weld overlay and the adjacent base material for at least 0.5 inch from each side of the weld shall be examined using the liquid penetrant method. This requirement is not consistent with Section 4.0(b) of Code Case N-638-1, which requires surface and ultrasonic examination of a band on either side of the overlay with an axial length of at least 1.5 times the component thickness or 5 inches whichever is greater. In its letter dated October 20, 2006, the licensee stated that the examination requirements of N-638-1 are applicable to cavity type repairs and have been utilized for overlay repairs with NRC approval. The NDE requirements in the relief request are only applicable to the area that would be affected by application of the overlay. Any PWSCC degradation would be in the alloy 82/182 weld or the adjacent HAZ. Further, the original weld and adjacent base materials have received a radiographic examination prior to initial acceptance during the plant construction. The proposed surface and volumetric examinations provide adequate assurance that any defects produced by welding of the overlay or by extension of pre-existing defects would be identified. The staff finds that the alternative provides sufficient surface examination and ultrasonic examination of the weld overlay to detect potential defects and is acceptable.

4.3.2 Preservice Examination

Section 3(b), *Preservice Inspection*, of the proposed alternative requires a preservice ultrasonic examination of the installed weld overlay and the upper (outer) 25 percent of the original pipe wall thickness. The required examination volume is defined in Figure 2 of the proposed alternative.

Paragraph 3(b)2 of the proposed alternative requires that the preservice examination acceptance standards of Table IWB-3514-2 of the ASME Code, Section XI, be applied to planar indications in the weld overlay material. If the indication is found acceptable per Table IWB-3514-2, the weld overlay will be placed in service and the inservice schedule and acceptance criteria of Paragraph 3(c) of the proposed alternative will be followed. In applying the acceptance standards of Table IWB-3514-2, wall thickness, t_w, shall be the thickness of the weld overlay. Planar flaws not meeting the preservice acceptance standards of Table IWB-3514-2 shall be repaired. Re-examination per IWB-2420 of the ASME Code, Section XI, is not required because unacceptable indications will be removed.

In RG 1.147, Revision 15, the NRC staff imposed a condition on Code Case N-638-1 regarding ultrasonic examination and associated acceptance criteria based on NB-5330 of the ASME Code, Section III. As stated in paragraph 3(b)2 of the proposed alternative, the licensee will be using acceptance criteria of ASME Code, Section XI in lieu of Section III. In the October 20, 2006 letter (ADAMS Accession No. ML062960237), the licensee stated that Code Case N-638-1 (and the temper bead welding techniques in IWA-4600) was written to address repair welds where a defect in piping is excavated and the resulting cavity is filled using a temper bead technique. However, an excavated cavity configuration differs significantly from the weld overlay configuration. The licensee has concluded that the proposed alternative was written to specifically address weld overlays, and not only does it adequately examine the weld overlays, but it provides more appropriate examinations and acceptance criteria than the NRC-imposed position. Conversely, the imposition of ASME Section III acceptance standards to weld overlays is inconsistent with years of NRC precedence and without justification given the evidence of past NRC approvals and operating experience.

The licensee's conclusion is based on the following:

1. Weld overlays have been used for repair and mitigation of cracking in Boiling Water Reactors since the early 1980s. In Generic Letter 88-01, the NRC approved the use of Section XI acceptance standards for determining the acceptability of installed weld overlays.

2. Weld overlays for repair of cracks in piping are not addressed by ASME Section III. ASME Section III, utilizes nondestructive examination procedures and techniques with flaw detection capabilities that are well within the practical limits of workmanship standards for welds. These standards are most applicable to volumetric examinations conducted by radiographic examination. Radiography (RT) of weld overlays is not appropriate because of presence of radioactive material in the Reactor Coolant system and water in the pipes. The acceptance standards are written for a range of fabrication flaws including lack of fusion, incomplete penetration, cracking, slag inclusions, porosity, and concavity. However, experience and fracture mechanics have demonstrated that many of the flaws that are rejected using ASME Section III acceptance standards do not have a significant effect on the structural integrity of the component.

3. The ultrasonic test (UT) examinations performed in accordance with the proposed alternative are in accordance with ASME Section XI, Appendix VIII, Supplement 11 as implemented through the PDI. These examinations are considered more sensitive for detection of defects, either from fabrication or service-induced, than either ASME Section III RT or UT methods. Further, construction type flaws have been included in the PDI qualification sample sets for evaluating procedures and personnel.

The NRC staff finds that the proposed alternative provides acceptable acceptance criteria for the ultrasonic examination based on the requirements of ASME Code, Section XI. The NRC staff agrees with the licensee that the condition imposed on Code Case N-638-1 in RG 1.147, Revision 14 is not applicable.

4.3.3 Inservice Examination

Paragraph 3(c) of the proposed alternative requires that inservice examinations of the FSWOLs be performed in accordance with subarticles Q-4300 and 4310 of Appendix Q to the 2004 Edition of Section XI with Addenda through 2005 with modifications. Appendix 8, Enclosure 1, of the proposed alternative provides the licensee's modifications to subarticles Q-4300 and 4310. The proposed ISI requirements are discussed below.

Paragraph (a) under *Modified Q-4300 Inservice Flaw Evaluation Requirements* in Appendix 8, Enclosure 1, of the proposed alternative, requires that flaws characterized as PWSCC in the Alloy 52/152 weld overlay are unacceptable and the use of IWB-3514-2 and IWB-3640 for PWSCC evaluation in the Class 1 overlay material is prohibited. The NRC staff finds that it is conservative to prohibit any PWSCC flaws to remain in service because PWSCC growth rate can be aggressive and unpredictable. Therefore, this requirement is acceptable.

Paragraph (c) under *Modified Q-4300 Inservice Flaw Evaluation Requirements* in Appendix 8, Enclosure 1, of the proposed alternative, requires that if examinations reveal crack growth or new cracking in the upper 25 percent of the original weld or base materials, the as-found flaw (postulated 75 percent through wall plus the portion of the flaw in the upper 25 percent) will be used to re-evaluate the crack growth analysis. The size of all flaws will be projected to the end of the design life of the overlay. Crack growth, including both stress corrosion and fatigue crack growth, shall be evaluated in the materials in accordance with IWB-3640. If the flaw is at or near the boundary of two different materials, evaluation of flaw growth in both materials is required. For unacceptable indications, the weld overlay shall be removed, including the original defective piping weldment, and corrected by a repair/replacement activity in accordance with IWA-4000. The NRC staff finds that these requirements are consistent with the NRC position on disposition of flaws detected in the weld overlays and, therefore, are acceptable.

Paragraph (b) under *Modified Q-4300 Re-Examination Requirements* in Appendix 8, Enclosure 1, of the proposed alternative requires that if inservice examinations reveal acceptable crack growth or new cracking in the upper 25 percent of the original weld or base materials, the weld overlay examination volume shall be reexamined during the first or second refueling outage following discovery of the growth or new cracking. Weld overlay examination volumes that show no additional indication of crack growth or new cracking shall be placed into a population to be examined on a sample basis. Twenty-five percent of this population shall be examined once every ten years. The NRC staff notes that this requirement is specifically applied to flaws detected in the original weld or base metal. The proposed requirement is consistent with Appendix Q-4300 of the ASME Code, Section XI and, therefore, is acceptable.

Paragraph (c) under *Modified Q-4300 Re-Examination Requirements* in Appendix 8, Enclosure 1, of the proposed alternative requires that if inservice examinations reveal acceptable non-PWSCC flaws in the overlay material, the weld overlay examination volume shall be reexamined during the first or second refueling outage following discovery of the growth or new cracking. Weld overlay examination volumes that show no additional indication of crack growth or new cracking shall be placed into a population to be examined on a sample basis. Twenty-five percent of this population shall be examined once every ten years. The NRC staff notes that this requirement is specifically applied to flaws detected in the weld overlays (as

opposed to the original weld or base metal). The proposed requirement is consistent with Appendix Q-4300 of the ASME Code, Section XI, and the staff's position. The NRC staff finds this requirement acceptable.

4.3.4 Pressure Testing

Section 4 of the proposed alternative requires that a system leakage test be performed in accordance with IWA-5000. The NRC staff finds that this requirement is consists with Code Case N-504-3 and, therefore, is acceptable.

4.4 Appendix 1-- Ambient Temperature Temper Bead Welding

Appendix 1, Enclosure 1, of the proposed alternative ISI-GEN-ALT-07-01, Version 2.0, specifies requirements for the ambient temperature temper bead welding, which are consistent with requirements of Code Case N-638-1 except for the following significant exceptions.

Paragraph 1.0(a) of Appendix 1 to the proposed alternative ISI-GEN-ALT-07-01, Version 2.0, does not limit the thickness of the weld overlay not to exceed the 50 percent of the ferritic base metal thickness.

Paragraph 2(g) of Appendix 1 to the proposed alternative ISI-GEN-ALT-07-01, Version 2.0, provides requirements for the case when the average lateral expansion value of the heat affected zone (HAZ) of Charpy V-notch specimens is less than the average value for the unaffected base metal.

Paragraph 3.0(c) of Appendix 1 to the proposed alternative ISI-GEN-ALT-07-01, Version 2.0, requires the heat input of the first three layers not to exceed 45,000 Joule/inch under any conditions.

The NRC staff evaluated the above three exceptions as part of its review of alternative ISI-GEN-ALT-06-03, Revision 2.0, and found the above exceptions acceptable as documented in the NRC letter dated April 3, 2007 (ADAMS Accession ML070790240). The staff's conclusions remain valid for ISI-GEN-ALT-07-01, Version 2.0. Paragraph 3(e) of Appendix 1 to the proposed alternative ISI-GEN-ALT-07-01, Version 2.0, requires that the interpass temperature be determined by direct temperature measurement. If it is impossible to measure the weld interpass temperature in this manner, the licensee will use heat flow calculations and mock-up testing in combination as identified in paragraphs 3.0(e)(2) and 3.0(e)(3). In addition, the licensee will measure the interpass temperature with certain weld pass/bead deposition frequency. The staff finds the requirements of paragraph 3(e) provide more temperature monitoring than Code Case N-638-1 and, therefore, are acceptable.

4.4.1. Licensee's Commitments

1. The licensee will provide to the NRC, prior to entering Mode 4, the stress analysis report which will include results showing that the requirements of Subarticles NB-3200 and NB-3600 of the ASME Code, Section III are satisfied. The stress analysis will also include results showing that the requirements of IWB-3000 of the ASME Code, Section XI, are satisfied. The results will show that the postulated crack including its growth in the nozzles do not adversely affect the integrity of the overlaid welds.

The licensee will provide to the NRC, within 14 days after the completion of the ultrasonic examination of the weld overlay installations, (a) the examination results of the weld overlays, and (b) a discussion of any repairs to the overlay material and/or base metal and the reason for repair.

2. The licensee will provide to the NRC, within 90 calendar days of the completion of the refueling outage, the IWB-3640 evaluation performed for any assumed flaw in any uninspectable volume in the weld overlay beneath a laminar flaw, if that assumed flaw failed to meet the preservice acceptance criteria of Table IWB-3514-2.

The staff finds that the licensee's commitments are acceptable because they will provide timely information regarding the weld overlay examination for the staff to monitor the quality of the weld overlay installation.

5.0 CONCLUSION

The NRC staff has reviewed the licensee's submittal and determined that the proposed alternatives will provide an acceptable level of quality and safety. Pursuant to 10 CFR 50.55a(a)(3)(i), the NRC staff authorizes the use of the proposed alternative ISI-GEN-ALT-07-01, Version 2.0, for the full structural weld overlay of the dissimilar metal welds of the pressurizer nozzles at Farley Unit 2 and Vogtle Unit 1. The effective period of the proposed alternative for Farley Unit 2 is through November 30, 2017. The effective period of the proposed alternative for Vogtle Unit 1 is through May 30, 2017.

All other ASME Code, Section XI requirements for which relief was not specifically requested and approved in this relief request remain applicable, including third-party review by the Authorized Nuclear Inservice Inspector.

Principal Contibutor: John Tsao, NRR

Date: March 10, 2008

UNITED STATES
NUCLEAR REGULATORY COMMISSION
WASHINGTON, D.C. 20555-0001

SAFETY EVALUATION REPORT BY THE OFFICE OF NUCLEAR REACTOR REGULATION

ALTERNATIVE VEGP-ISI-ALT-01, VERSION 1.0

IMPLEMENTATION OF THE PERFORMANCE DEMONSTRATION INITIATIVE PROGRAM

VOGTLE ELECTRIC GENERATING PLANT, UNITS 1 AND 2

SOUTHERN NUCLEAR OPERATING COMPANY, INC.

DOCKET NOS. 50-424 AND 50-425

1.0 INTRODUCTION

By letter dated April 23, 2009 (Agencywide Document Access and Management System (ADAMS) Accession No. ML091140339), to the U.S. Nuclear Regulatory Commission (NRC), Southern Nuclear Operating Company, Inc., (the licensee) submitted a relief request from certain qualification requirements of the American Society of Mechanical Engineers, *Boiler and Pressure Vessel Code* (ASME Code) for Vogtle Electric Generating Plant, Units 1 and 2 (VEGP 1 and 2). Specifically, the licensee proposed in request VEGP-ISI-ALT-01 to use the ASME Code, Section XI, Appendix VIII, Supplement 11, "Qualification Requirements for Full Structural Overlaid Wrought Austenitic Piping Welds," as administered by the Electric Power Research Institute (EPRI), Performance Demonstration Initiative (PDI) Program. The request applies to both units for the remainder of the third 10-year inservice inspection (ISI) interval which began May 31, 2007, and ends May 30, 2017.

2.0 REGULATORY EVALUATION

The ISI of the ASME Code Class 1, 2, and 3, components is to be performed in accordance with Section XI of the ASME Code and applicable edition and addenda as required by Title 10 of *the Code of Federal Regulations* (10 CFR) Section 50.55a(g), except where specific relief has been granted by the Commission pursuant to 10 CFR 50.55a(g)(6)(i). Section 50.55a(a)(3) of 10 CFR states in part that alternatives to the requirements of paragraph (g) may be used when authorized by the NRC staff, if the applicant demonstrates that: (i) the proposed alternatives would provide an acceptable level of quality and safety, or (ii) compliance with the specified requirements would result in hardship or unusual difficulty without a compensating increase in the level of quality and safety. The licensee proposed an alternative in accordance with 10 CFR 50.55a(a)(3)(i).

Pursuant to 10 CFR Section 50.55a(g)(4), ASME Code Class 1, 2, and 3, components (including supports) will meet the requirements, except the design and access provisions and the preservice examination requirements, set forth in the ASME Code, Section XI, "Rules for Inservice Inspection of Nuclear Power Plant Components," to the extent practical within the

limitations of design, geometry, and materials of construction of the components. The regulations require that inservice examination of components and system pressure tests conducted during the first 10-year interval and subsequent intervals comply with the requirements in the latest edition and addenda of Section XI of the ASME Code incorporated by reference in 10 CFR 50.55a(b) 12 months prior to the start of the 120-month interval, subject to the limitations and modifications listed therein. Section 50.55a(g)(4)(iv) of 10 CFR states that inservice examination of components and system pressure tests may meet the requirements set forth in subsequent editions and addenda that are incorporated by reference in 10 CFR 50.55a(b), subject to the limitations and modification listed in 10 CFR 50.55a(b) and subject to Commission approval. Portions of editions or addenda may be used provided that all related requirements of the respective editions or addenda are met. The code of record for the third 10-year ISI interval at VEGP 1 and 2 is the 2001 Edition through 2003 Addenda of the ASME Code.

3.0 TECHNICAL EVALUATION

3.1 Affected Components

The affected components are ASME Class 1 pressure retaining welds in piping subject to ASME Code, Section XI, Appendix VIII, Supplement 11, examinations.

3.2 Applicable Code

The applicable Code is the 2001 Edition of ASME Section XI, as required by 10 CFR 50.55a(b)(2)(xxiv). The ultrasonic testing (UT) examination must be performed using personnel, procedures, and equipment qualified in accordance with Appendix VIII, Supplement 11. The selected paragraphs in Supplement 11 affected by this request for relief are:

1.1(b), 1.1(d)(1), 1.1(e)(1), 1.1(e)(2), 1.1(e)(2)(a)(1), 1.1(e)(2)(a)(2), 1.1(e)(2)(a)(3), 1.1(e)(2)(b)(1), 1.1(e)(2)(b)(2), 1.1(e)(2)(b)(3), 1.1(f)(1), 1.1(f)(3), 1.1(f)(4), 2.0, 2.1, 2.2(d), 2.3, 3.1, 3.2(a), and 3.2(b).

3.3 Proposed Alternative

In lieu of the requirements of ASME Code, Section XI, 2001 Edition, Appendix VIII, Supplement 11, the licensee shall use the requirements of the EPRI-PDI Program. The major differences between the 2001 Edition of the ASME Code, Section Xi, Appendix VIII, requirements and the PDI Program are in an attachment to the licensee's submittal which are discussed below.

3.4 Licensee Basis for the Alternative

The requirements for selected paragraphs of ASME Code, Section XI, Appendix VIII, Supplement 11, as stated in the 2001 Edition, as required by 10 CFR 50.55a(b)(2)(xxiv), as changed and implemented by the PDI program follows:

Paragraph 1.1(d)(1), requires that all base metal flaws be cracks. Implanting a crack requires excavation of the base material on at least one side of the flaw. While this may be satisfactory for ferritic materials, it does not produce a useable axial flaw in austenitic materials because the

sound beam, which normally passes only through base material, must now travel through weld material on at least one side, producing an unrealistic flaw response. To resolve this issue, the PDI program revised this paragraph to allow use of alternative flaw mechanisms under controlled conditions. For example, alternative flaws shall be limited to when implantation of cracks precludes obtaining an effective UT response, flaws shall be semi-elliptical with a tip width of less than or equal to 0.002-inches, and the remainder shall be alternative flaws.

Relief is requested to allow closer spacing of flaws provided they didn't interfere with detection or discrimination. The existing specimens used to date for qualification to the Tri-party agreement [Reference 1] have a flaw population density greater than allowed by the current ASME Code requirements. These samples have been used successfully for all previous qualifications under the Tri-party agreement program. To facilitate their use and provide continuity from the Tri-party agreement program to Supplement 11, the PDI Program has merged the Tri-party test specimens into their weld overlay program. For example: the requirement for using IWA-3300 for proximity flaw evaluation in paragraph 1.1(e)(1) was excluded, instead indications will be sized based on their individual merits; paragraph 1.1(d)(1) includes the statement that intentional overlay fabrication flaws shall not interfere with ultrasonic detection or characterization of the base metal flaws; paragraph 1.1(e)(2)(a)(1) was modified to require that a base metal grading unit include at least 1 in. of the length of the overlaid weld, rather than 3 inches; paragraph 1.1(e)(2)(a)(3) was modified to require sufficient unflawed overlaid weld and base metal to exist on all sides of the grading unit to preclude interfering reflections from adjacent flaws, rather than the 1-inch requirement of Supplement 11, paragraph 1.1(e)(2)(b)(1), was modified to define an overlay fabrication grading unit as including the overlay material and the base metal-to-overlay interface for a length of at least 1 inch rather than the 6 square inch requirement of Supplement 11, and paragraph 1.1(e)(2)(b)(2), states that overlay fabrication grading units designed to be unflawed shall be separated by unflawed overlay material and unflawed base metal-to-overlay interface for at least 1 inch at both ends, rather than around its entire perimeter.

Additionally, the requirement for axially oriented overlay fabrication flaws in paragraph 1.1(e)(1), was excluded from the PDI Program as an improbable scenario. Weld overlays are typically applied using automated gas tungsten arc welding techniques with the filler metal being applied in a circumferential direction. Because resultant fabrication induced discontinuities would also be expected to have major dimensions oriented in the circumferential direction axial overlay fabrication flaws are unrealistic.

The PDI Program revised paragraph 2.0 allowing the overlay fabrication and base metal flaw tests to be performed separately. The requirement in paragraph 3.2(b), for reporting all extensions of cracking into the overlay, is omitted from the PDI Program because it is redundant to the [root mean square] RMS calculations performed in paragraph 3.2(c), and its presence adds confusion and ambiguity to depth sizing as required by paragraph 3.2(c). This also makes the weld overlay program consistent with the Supplement 2 depth sizing criteria.

To avoid confusion, several instances of the term "cracks" or "cracking" were changed to the term "flaws" because of the use of alternative flaw mechanisms [i.e., cracks are a type of flaw]. Additionally, to avoid confusion, the overlay thickness tolerance contained in paragraph 1.1(b) last sentence, was reworded and the phrase "and the remainder shall be alternative flaws" was added to the next to last sentence in paragraph 1.1(d)(1).

The proposed amended requirements of Supplement 11 for the qualification of personnel, procedures, and equipment will provide an alternative with an acceptable level of quality and safety.

3.5 Licensee's Basis for Proposed Alternative and NRC Staff Evaluation

The United States nuclear utilities created the PDI Program to implement performance demonstration requirements contained in Appendix VIII of Section XI of the ASME Code. The PDI has developed into a program for qualifying equipment, procedures, and personnel for examinations of weld overlays in accordance with the UT criteria of Appendix VIII, Supplement 11. Prior to the Supplement 11 program, EPRI maintained a performance demonstration program for weld overlay qualification under the Tri-party Agreement (Reference 1). Instead of having two programs with similar objectives, the NRC staff recognized the PDI Program for weld overlay qualifications as an acceptable alternative to the Tri-party Agreement (Reference 2).

The PDI Program is routinely assessed by the NRC staff for consistency with the current ASME Code and proposed changes. The PDI Program does not fully comport with the existing requirements of Supplement 11. PDI representatives presented the differences at public meetings in which the NRC staff participated (References 3 and 4). The differences are in flaw locations within test specimens and fabricated flaw tolerances. The changes in flaw location permitted using test specimens from the Tri-party Agreement, and the changes in fabricated flaw tolerances provide UT acoustic responses similar to the responses associated with intergranular stress corrosion cracking. Based on the discussions at these public meetings, the NRC staff determined that the PDI Program provides an acceptable level of quality and safety.

Pursuant to 10 CFR 50.55a(a)(3)(i), the licensee requested relief to use the EPRI-PDI program for implementation of Appendix VIII, Supplement 11, requirements. Specifically, relief is requested from Supplement 11, Paragraphs 1.1(b), 1.1(d)(1), 1.1(e)(1), 1.1(e)(2), 1.1(e)(2)(a)(1), 1.1(e)(2)(a)(2), 1.1(e)(2)(a)(3), 1.1(e)(2)(b)(1), 1.1(e)(2)(b)(2), 1.1(e)(2)(b)(3), 1.1(f)(1), 1.1(f)(3), 1.1(f)(4), 2.2(d), 2.0, 2.1, 2.2(d), 2.3, 3.1, 3.2(a) and 3.2(b). The proposed alternative will be implemented through use of the EPRI-PDI Program weld overlay examination qualification requirements.

The licensee's basis for the proposed alternative and the NRC staff evaluation of the differences identified in the PDI Program with Supplement 11 are as follows:

Paragraph 1.1(b) of Supplement 11 states limitations to the maximum thickness for which a procedure may be qualified. The ASME Code states that, "The specimen set must include at least one specimen with overlay thickness within minus 0.10-inch to plus 0.25-inch of the maximum nominal overlay thickness for which the procedure is applicable." The ASME Code requirement addresses the specimen thickness tolerance for a single specimen set, but is confusing when multiple specimen sets are used. The PDI proposed alternative states that, "the specimen set shall include specimens with overlay not thicker than 0.10-inch more than the minimum thickness, nor thinner than 0.25-inch of the maximum nominal overlay thickness for which the examination procedure is applicable." The proposed alternative provides clarification on the application of the tolerance. The tolerance is unchanged for a single specimen set; however, the proposed alternative clarifies the tolerance for multiple specimen sets by providing tolerances for both the minimum and maximum thicknesses. The proposed wording eliminates

confusion while maintaining the intent of the overlay thickness tolerance. Therefore, the NRC staff finds that this PDI Program alternative maintains the intent of the Supplement 11, requirements and is acceptable.

Paragraph 1.1(d)(1) requires that all base metal flaws be cracks. The PDI determined that certain Supplement 11 requirements pertaining to location and size of cracks would be extremely difficult to embed in test specimens. For example, flaw implantation requires excavating a volume of base material to allow a pre-cracked coupon to be welded into this area. This process would add weld material to an area of the specimen that typically consists of only base material, and could potentially make ultrasonic examination more difficult and not representative of actual field conditions. In an effort to satisfy the requirements, PDI developed a process for fabricating flaws that exhibit crack-like reflective characteristics. Instead of all flaws being cracks, as required by Paragraph 1.1(d)(1) of Supplement 11, the PDI Program for weld overlays contain at least 70 percent cracks with the remainder being fabricated flaws exhibiting crack-like reflective characteristics. The fabricated flaws are semi-elliptical with tip widths of less than 0.002-inches. The licensee provided further information describing a revision to the PDI Program alternative to clarify when real cracks, as opposed to fabricated flaws, will be used; "Flaws shall be limited to the cases where implantation of cracks produces spurious reflectors that are uncharacteristic of actual flaws." The NRC staff has reviewed the flaw fabrication process, compared the reflective characteristics between actual cracks and PDI-fabricated flaws, and found that the fabricated flaws for this application provide assurance that the PDI Program meets the intent of the Supplement 11 requirement. Therefore, the NRC staff finds that the proposed alternative to the Supplement 11 requirement is acceptable.

Paragraph 1.1(e)(1) requires that at least 20 percent but not less than 40 percent of the flaws shall be oriented within ±20 degrees of the axial direction (of the piping test specimen). Flaws contained in the original base metal heat-affected zone satisfy this requirement; however, PDI excludes axial fabrication flaws in the weld overlay material. PDI has concluded that axial flaws in the overlay material are improbable because the overlay filler material is applied in the circumferential direction (parallel to the girth weld); therefore, fabrication anomalies would also be expected to have major dimensions in the circumferential direction. The NRC staff finds that this approach to implantation of fabrication flaws is reasonable for meeting the intent of the Supplement 11 requirement. Therefore, the NRC staff concludes that the PDI's application of flaws oriented in the axial direction is acceptable.

Paragraph 1.1(e)(1) also requires that the rules of IWA-3300 shall be used to determine whether closely spaced flaws should be treated as single or multiple flaws. PDI treats each flaw as an individual flaw and not as part of a system of closely spaced flaws. PDI controls the flaws going into a test specimen set such that the flaws are free of interfering reflections from adjacent flaws. In some cases this permits flaws to be spaced closer than what is allowed for classification as a multiple set of flaws by IWA-3300, thus potentially making the performance demonstration more challenging than the existing requirement. Hence, the NRC staff concludes that PDI's application for closely spaced flaws is acceptable.

Paragraph 1.1(e)(2) requires that specimens be divided into base metal and overlay grading units. The PDI Program adds clarification with the addition of the word "fabrication" and ensures that flaw identification will not be masked by other flaws with the addition of the phrase "Flaws shall not interfere with ultrasonic detection or characterization of other flaws." PDI's alternative

provides clarification and assurance that the flaws are identified. Therefore, the NRC staff finds that the PDI alternative to the Supplement 11 requirement is acceptable.

Paragraph 1.1(e)(2)(a)(1) requires that a base grading unit shall include at least three inches of the length of the overlaid weld, and the base grading unit includes the outer 25 percent of the overlaid weld and base metal on both sides. The PDI Program reduced the criteria to one inch of the length of the overlaid weld and eliminated from the grading unit the need to include both sides of the weld. The proposed change permits the PDI Program to continue using test specimens from the existing weld overlay program which have flaws on both sides of the welds. These test specimens have been used successfully for testing the proficiency of personnel for over 16 years. The weld overlay qualification is designed to be a near-side (relative to the weld) examination, and it is improbable that a candidate would detect a flaw on the opposite side of the weld due to the sound attenuation and re-direction caused by the weld microstructure. However, the presence of flaws on both sides of the original weld (outside the PDI grading unit) may actually provide a more challenging examination, as candidates must determine the relevancy of these flaws, if detected. The NRC staff has determined that PDI's use of the one-inch length of the overlaid weld base grading unit and elimination from the grading unit the need to include both sides of the weld, as described in the PDI Program alternative, is an acceptable alternative to the Supplement 11 requirements. Therefore, the NRC staff finds the proposed alternative acceptable.

Paragraph 1.1(e)(2)(a)(2) requires when base metal cracking penetrates into the overlay material, that a portion of the base grading unit shall not be used as part of the overlay grading unit. The NRC staff finds that the PDI Program adjusts for the changes in Paragraph 1.1(e)(2)(a)(2) of Supplement 11 and conservatively states that when base metal flaws penetrate into the overlay material, no portion of it shall be used as part of the overlay fabrication grading unit. The NRC staff finds that the PDI Program also provided clarification by the addition of the term "flaws" for "cracks" and the addition of "fabrication" to "overlay grading unit." The NRC staff concludes that the PDI Program alternative provides clarification and conservatism, and therefore, is acceptable.

Paragraph 1.1(e)(2)(a)(3) requires that for unflawed base grading units, at least one inch of unflawed overlaid weld and base metal shall exist on either side of the base grading unit. This is to minimize the number of false identifications of extraneous reflectors. The PDI Program stipulates that unflawed overlaid weld and base metal exists on all sides of the grading unit and flawed grading units must be free of interfering reflections from adjacent flaws which addresses the same concerns as the ASME Code. Hence, the NRC staff concludes that PDI's application of the variable flaw-free area adjacent to the grading unit meets the intent of the Supplement 11 requirements and is, therefore, acceptable.

Paragraph 1.1(e)(2)(b)(1) requires that an overlay grading unit shall include the overlay material and the base metal-to-overlay interface of at least six square inches. The overlay grading unit shall be rectangular, with minimum dimensions of two inches. The PDI Program reduces the base metal-to-overlay interface to at least one inch (in lieu of a minimum of two inches) and eliminates the minimum rectangular dimension. This change is necessary to allow use of existing examination specimens that were fabricated in order to meet NRC Generic Letter 88-01 (Tri-party Agreement, July 1984). This criterion may be more challenging to meet than that of the ASME Code because of the variability associated with the shape of the grading unit.

Therefore, the NRC staff concludes that PDI's application of the grading unit is an acceptable alternative to the Supplement 11 requirements.

Paragraph 1.1(e)(2)(b)(2) requires that unflawed overlay grading units shall be surrounded by unflawed overlay material and unflawed base metal-to-overlay interface for at least one inch around it's entire perimeter. The PDI Program redefines the area by noting unflawed overlay fabrication grading units shall be separated by at least one inch of unflawed material at both ends and sufficient area on both sides to preclude interfering reflections from adjacent flaws. The NRC staff determined that the relaxation in the required area on the sides of the specimens, while still ensuring no interfering reflections, may provide a more challenging demonstration than required by ASME Code because of the possibility of having a parallel flaw on the opposite side of the weld. Therefore, the NRC staff concludes that PDI's application is an acceptable alternative to the Supplement 11 requirements.

Paragraph 1.1(e)(2)(b)(3) requirements are retained in the PDI Program. In addition, the PDI Program requires that initial procedure qualification contain three times the number of flaws required for a personal qualification. To qualify new values of essential variables, the equivalent of at least one personal qualification is required. The NRC staff concludes that PDI's additions enhance the ASME Code requirements and are, therefore, acceptable because it provides more stringent qualification criteria.

Paragraph 1.1(f)(1) requirements are retained in the PDI Program, with the clarification change of the term "flaws" for "cracks." In addition, the PDI Program includes the requirements that sizing sets shall contain a distribution of flaw dimensions to verify sizing capabilities. The PDI Program also requires that initial procedure qualification contain three times the number of flaws required for a personal qualification. To qualify new values of essential variables, the equivalent of at least one personal qualification is required. The NRC staff concludes that PDI's additions enhance the ASME Code requirements and are, therefore, acceptable because it provides more stringent qualification criteria.

Paragraphs 1.1(f)(3) and 1.1(f)(4) requirements are clarified by the PDI Program replacing the term "cracking" with "flaws" because of the use of alternative flaw mechanisms. The NRC staff concludes that this clarification in the PDI Program meets the intent of the ASME Code requirements and is acceptable.

Paragraph 2.0 is silent on performance demonstrations for the weld metal and overlay fabrication. The PDI Program addresses the two performance demonstrations by specifying that they may be performed separately. The PDI Program adds clarity to the testing criteria without changing the requirement. Therefore, the NRC staff concludes that PDI's clarification is an enhancement to ASME Code requirement and is acceptable.

Paragraphs 2.1 and 2.2(d) requirements are clarified by the PDI Program by the addition of the terms "metal" and "fabrication". These terms were added to clarify the description of the grading units present in a specimen. Metal was added to base to read base metal and fabrication was added to overlay to read overlay fabrication. The NRC staff determined that the clarifications provide acceptable classification of the terms they are enhancing. Therefore, the NRC staff concludes that the PDI Program meets the intent of the ASME Code requirements and is acceptable.

Paragraph 2.3 requires that, for depth sizing tests, 80 percent of the flaws shall be sized at a specific location on the surface of the specimen identified to the candidate. This requires detection and sizing tests to be performed separately. The PDI revised the weld overlay program to allow sizing to be conducted either in conjunction with, or separately from, the flaw detection test. If performed in conjunction with detection and the detected flaws do not meet the Supplement 11 range criteria, additional specimens will be presented to the candidate with the regions containing flaws identified. Each candidate will be required to determine the maximum depth of the flaw in each region. For separate sizing tests, the regions of interest will also be identified and the maximum depth and length of each flaw in the region will similarly be determined. In addition, PDI stated that grading units are not applicable to sizing tests, and that each sizing region will be large enough to contain the target flaw, but small enough such that candidates will not attempt to size a different flaw. The NRC staff has determined that the above clarification provides a basis for implementing sizing tests in a systematic, consistent manner that meets the intent of Supplement 11. Therefore, the NRC staff concludes that the PDI method is acceptable.

Paragraph 3.1 requires that examination procedures, equipment and personnel (as a complete ultrasonic system) are qualified for detection or sizing of flaws, as applicable, when certain criteria are met. The PDI Program allows procedure qualification to be performed separately from personnel and equipment qualification. Historical data indicate that, if ultrasonic detection or sizing procedures are thoroughly tested, personnel and equipment using those procedures have a higher probability of successfully passing a qualification test. In an effort to increase this passing rate, PDI has elected to perform procedure qualifications separately in order to assess and modify essential variables that may affect overall system capabilities. For a procedure to be qualified, the PDI Program requires three times as many flaws to be detected (or sized) as shown in Supplement 11 for the entire ultrasonic system. The personnel and equipment are still required to meet the Supplement 11 requirement. Therefore, the PDI Program criteria exceed the ASME Code requirements for personnel, procedures, and equipment qualifications. The NRC staff concludes that the PDI Program criteria are acceptable.

Paragraph 3.2(a) of Supplement 11 refers to term the "cracking" in the base metal and "flaws" within the same acceptance criteria. The PDI Program changed the term from "cracking" to "flaws" for consistency in the acceptance criteria and uniformity within the proposed alternative. The NRC staff concludes that PDI's change adds clarity and meets the intent of the ASME Code requirements, and therefore, is acceptable.

Paragraph 3.2(b) requires that all extensions of base metal cracking into the overlay material by at least 0.10-inch are reported as being intrusions into the overlay material. The PDI Program omits this criterion because of the difficulty in actually fabricating a flaw with a 0.10-inch minimum extension into the overlay, while still knowing the true state of the flaw dimensions. However, the PDI program requires that cracks be depth-sized to the tolerance specified in the ASME Code which is 0.125-inches. Since the ASME Code tolerance is close to the 0.10-inch value of Paragraph 3.2(b), any crack extending beyond 0.10-inch into the overlay material would be identified as such from the characterized dimensions. The NRC staff has determined that reporting of an extension in the overlay material is redundant for performance demonstration testing because of the flaw sizing tolerance. Therefore, the NRC staff concludes that PDI's omission of highlighting a crack extending beyond 0.10-inch into the overlay material is acceptable.

4.0 CONCLUSION

The NRC staff has reviewed the licensee's submittal and determined that, in accordance with 10 CFR 50.55a(a)(3)(i), use of the PDI Program to select paragraphs in Supplement 11 provides an acceptable level of quality and safety. Therefore, pursuant to 10 CFR 50.55a(a)(3)(i), the proposed alternative VEGP-ISI-ALT-01 is authorized for the third 10-year ISI interval at VEGP 1 and 2.

All other ASME Code, Section XI, requirements for which relief was not specifically requested and approved in this relief request remain applicable, including third-party review by the Authorized Nuclear Inservice Inspector.

5.0 REFERENCES

1. The Tri-party Agreement is between NRC, EPRI, and the Boiling Water Reactor Owners Group (BWROG), "Coordination Plan for NRC/EPRI/BWROG Training and Qualification Activities of NDE (Nondestructive Examination) Personnel," July 3, 1984 (ADAMS Accession No. 8407090122).

2. Letter from William H. Bateman to Michael Bratton, "Weld Overlay Performance Demonstration Administered by PDI as an Alternative for Generic Letter 88-01 Recommendations," January 15, 2002 (ADAMS Accession No. ML020160532).

3. Memorandum from Donald G. Naujock to Terence Chan, "Summary of Public Meeting Held January 31 - February 2, 2002, with PDI Representatives," March 22, 2002 (ADAMS Accession No. ML010940402).

4. Memorandum from Donald G. Naujock to Terence Chan, "Summary of Public Meeting Held June 12 through June 14, 2001, with PDI Representatives," November 29, 2001 (ADAMS Accession No. ML013330156).

Principal Contributor: Don Naujock, NRR

Date of Issuance: July 6, 2009

ENCLOSURE 4

CODE CASES

Code Cases

IWA-2420 requires that inspection plans include Code Cases proposed for use and the extent of their application. Those Code Cases acceptable for use by the NRC are listed in Regulatory Guide 1.147. The latest version of Regulatory Guide 1.147 approved for use by the NRC is published in 10 CFR 50.55a. The version of Regulatory Guide 1.147 published at the beginning of the 3rd Interval in 10 CFR 50.55a is Revision 14. On December 19, 2007, the NRC issued a Final Rule (71750) approving Revision 15 of Regulatory Guide 1.147. The effective date for Revision 15 is January 18, 2008. Therefore, Vogtle can use approved Code Cases from either revision of the Regulatory Guide.

During the 3rd Interval, the NRC will approve additional revisions of Regulatory Guide 1.147. These are the rules that must be followed:

- If a Code Case has previously been implemented by Vogtle and a later version of the Code Case is incorporated by reference into 10 CFR 50.55a and listed Regulatory Guide 1.147 during the 3rd Interval, it is permissible to use either the later version or the previous version. *An exception to this provision would be the inclusion of a limitation or condition on the use of the Code Case which is necessary, for example, to enhance safety.*

- 10 CFR 50.55a requires that when Vogtle initially implements a Code Case, the most recent version of that Code Case as listed in Regulatory Guide 1.147 must be implemented.

- Code Cases may expire or be annulled because the provisions have been incorporated into the Code, the application for which it was specifically developed no longer exists, or experience has shown that an examination or testing method is no longer inadequate. After a Code Case is annulled and 10 CFR 50.55a and Regulatory Guide 1.147 are amended, Vogtle may not implement that Code Case for the first time. However, if Vogtle has implemented the Code Case prior to annulment, Vogtle may continue to use that Code Case through the end of the 3rd Interval.

- Regulatory Guide 1.147 also contains Code Cases that are acceptable provided that they are used with the identified limitations or modifications, i.e., the Code Case is generally acceptable but the NRC has determined that the alternative requirements must be supplemented in order to provide an acceptable level of quality and safety. These caveats established by the NRC must be used when using the Code Case.

Table 1 lists all Section XI Code Cases that may be used by Vogtle during the 3rd Interval without prior NRC approval. Code Cases currently used or considered for use at Vogtle are designated by a "Yes" in Column 3. Use of other Code Cases or revisions to Code Cases requires prior NRC approval per 10 CFR 50.55a(a)(3).

Table 1 NRC Approved Code Cases				
Code Cases	**Rev**	**Used at VEGP?**	**Applicability Date Up To and Including**	**Comments**
N-307-3 Revised Ultrasonic Examination Volume for Class 1 Bolting, Table IWB-2500-1, Examination Category B-G-1, When the Examinations Are Conducted from the End of the Bolt or Stud or from the Center-Drilled Hole	14&15	NO	1999A	Past applicability date. Incorporated into the Code.
N-311 Alternative Examination of Outlet Nozzle on Secondary Side of Steam Generators.	14	NO	2004	SG outlet nozzles are integral to the head. There is not a weld.
N-322 Examination Requirements for Integrally Welded or Forged Attachments to Class 1 Piping at Containment Penetrations	14	NO	1993A	Past applicability date. Incorporated into the Code.
N-323-1 Alternative Examination for Welded Attachments to Pressure Vessels	14	NO	1996A	Past applicability date. Incorporated into the Code.
N-334 Examination Requirements for Integrally Welded or Forged Attachments to Class 2 Piping at Containment Penetrations	14&15	NO	1980A	Past applicability date. Incorporated into the Code.
N-416-3 Alternative Pressure Test Requirements for Welded Repairs or Installation of Replacement Items by Welding. Class 1, 2, and 3.	14&15	NO	1998A	Past applicability date. Incorporated into the Code.
N-432-1 Repair Welding Using Automatic or Machine Gas Tungsten-Arc Welding (GTAW) Temper Bead Technique	14&15	**YES**	2005A	Use by referencing in the repair plan.
N-435-1 Alternative Examination Requirements for Vessels With Wall Thickness 2 in or less	14	NO	1995	Past applicability date. Incorporated into the Code.
N-460 Alternative Examination Coverage for Class 1 and 2 Welds	14&15	**YES**	2004	
N-471 Acoustic Emission for Successive Inspections	14&15	NO	1999A	Past applicability date. Incorporated into the Code.
N-481 Alternative Examination Requirements for Cast Austenitic Pump Casings	14	NO	1999A	Past applicability date. Incorporated into the Code.

Table 1 NRC Approved Code Cases				
Code Cases	**Rev**	**Used at VEGP?**	**Applicability Date Up To and Including**	**Comments**
N-485-1 Eddy Current Examination of Coated Ferritic Surfaces as an Alternative to Surface Examination	14	NO	1995	Past applicability date. Incorporated into the Code.
N-490-1 Alternative Vision Test Requirements for Nondestructive Examiners	14	NO	1990A	Past applicability date. Incorporated into the Code.
N-491-2 Rules for Examination of Class 1, 2, 3, and MC Component Supports	14&15	NO	1996A	Past applicability date. Incorporated into the Code.
N-494-3 Pipe Specific Evaluation Procedures and Acceptance Criteria for Flaws in Class 1 Ferritic Piping that Exceed the Acceptance Standards of IWB-3514.2 and in Class 1 Austenitic Piping that Exceed the Acceptance Standards of IWB-3514.3	14&15	NO	1995	Past applicability date. Incorporated into the Code.
N-496-2 Helical Coil Threaded Inserts	14&15	NO	1995	Past applicability date. Incorporated into the Code.
N-498-4 Alternative Requirements for 10-Year System Hydrostatic Testing for Class 1, 2, and 3 Systems. *NRC Condition for use:* Prior to conducting the VT-2 of Class 2 and 3 components not required to operate during normal plant operation, a 10 minute holding time is required after attaining test pressure. Prior to conducting the VT-2 of Class 2 and 3 components required to operate during normal plant operation, no holding time is required, provided the system has been in operation for at least 4 hours for insulated components or 10 minutes for non-insulated components.	14&15	NO	2000A	Past applicability date. Incorporated into the Code.
N-503 Limited Certification of Nondestructive Examination Personnel Note: Because of the statistical screening criteria used for Appendix VIII to Section XI qualifications, this Code Case is not applicable to Appendix VIII, "Performance Demonstration for Ultrasonic Examination Systems	14	NO	1992A	Past applicability date. Incorporated into the Code.

Table 1 NRC Approved Code Cases				
Code Cases	**Rev**	**Used at VEGP?**	**Applicability Date Up To and Including**	**Comments**
N-504-2 Alternative Rules for Repair of Class 1, 2, and 3 Austenitic Stainless Steel Piping	14	NO	1995A	Past applicability date. Incorporated into the Code.
N-504-3 Alternative Rules for Repair of Class 1, 2, and 3 Austenitic Stainless Steel Piping *NRC Condition for use:* The provisions of Section XI, Nonmandatory Appendix Q, "Weld Overlay Repair of Class 1, 2, and 3 Austenitic Stainless Steel Piping Weldments, must also be met.	15	**YES**	2004	Use by referencing in the repair plan.
N-508-2 Rotation of Serviced Snubbers and Pressure Relief Valves for the Purpose of Testing	14	NO	2000A	Past applicability date. Incorporated in the Code.
N-508-3 Rotation of Serviced Snubbers and Pressure Relief Valves for the Purpose of Testing	15	**YES**	2003A	Use by referencing in the repair plan.
N-513-1 Evaluation Criteria for Temporary Acceptance of Flaws in Class 3 Piping	14	NO	2001	Past applicability date. Incorporated into the Code.
N-513-2 Evaluation Criteria for Temporary Acceptance of Flaws in Class 3 Piping	15	**YES**	2003A	Use by referencing in the repair plan.
N-516-3 Underwater Welding, Section XI *NRC Condition for use:* Licensees must obtain NRC approval in accordance with 10 CFR 5055a(a)(3) regarding the technique to be used in the weld repair or replacement of irradiated material underwater	14&15	**YES**	2005A	Use by referencing in the repair plan.
N-517-1 Quality Assurance Program Requirements for Owners	14&15	**YES**	2005A	May use if needed. Revision 15 deleted the NRC conditions for use.
N-522 Pressure Testing of Containment Penetration Piping	14&15	NO	1996A	Past applicability date. Incorporated into the Code.

Table 1 NRC Approved Code Cases				
Code Cases	**Rev**	**Used at VEGP?**	**Applicability Date Up To and Including**	**Comments**
N-523-2 Mechanical Clamping Devices for Class 2 and 3 Piping	14	NO	1996A	Past applicability date. Incorporated into the Code.
N-526 Alternative Requirements for Successive Inspections of Class 1 and 2 Vessels	14&15	**YES**	2005A	If subsurface flaws are detected this Code Case may be used.
N-528-1 Purchase, Exchange, or Transfer of Material Between Nuclear Plant Sites *NRC Condition for use*: The requirements of 10 CFR Part 21 are to be applied to the nuclear plant site supplying the material as well as to the nuclear plant site receiving the material that has been purchased, exchanged, or transferred between sites.	14&15	**YES**	2005A	May use if needed.
N-532-1 Alternative Requirements to Repair and Replacement Documentation Requirements and Inservice Summary Report Preparation and Submission as Required by IWA-4000 and IWA-6000 *NRC Condition for use*: Code Case N-532-1 requires an Owner's Activity Report Form OAR-1 to be prepared and certified upon completion of each refueling outage. The OAR-1 forms must be submitted to the NRC within 90 days of the completion of the refueling outage	14	NO	2000A	Past applicability date.
N-532-4 Alternative Requirements to Repair and Replacement Documentation Requirements and Inservice Summary Report Preparation and Submission as Required by IWA-4000 and IWA-6000.	15	**YES**	2005A	May use if needed. (The requirement for a 90 day submittal after the completion of the refueling outage is in the code case).

Table 1 NRC Approved Code Cases				
Code Cases	**Rev**	**Used at VEGP?**	**Applicability Date Up To and Including**	**Comments**
N-533-1 Alternative Requirements for VT-2 Visual Examination of Class 1, 2, and 3 Insulated Pressure-Retaining Bolted Connections *NRC Condition for use:* Prior to conducting the VT-2 examination of Class 2 and Class 3 components not required to operate during normal plant operation, a 10 minute holding time is required after attaining test pressure. Prior to conducting the VT-2 examination of Class 2 and Class 3 components required to operate during normal plant operation, no holding time is required, provided the system has been in operation for at least 4 hours for insulated components or 10 minutes for non-insulated components.	14&15	NO	2000A	Past applicability date. Incorporated into the Code.
N-534 Alternative Requirements for Pneumatic Pressure Testing	14&15	NO	1997A	Past applicability date. Incorporated into the Code.
N-537 Location of Ultrasonic Depth-Sizing Flaws, Section XI	14&15	NO	2001	Past applicability date. Incorporated into the Code.
N-545 Alternative Requirements for Conduct of Performance Demonstration Detection Test of Reactor Vessel	14&15	**YES**	2004	
N-546 Alternative Requirements for Qualification of VT-2 Examination NRC Conditions for use: (1) Qualify examination personnel by test to demonstrate knowledge of Section XI and plant specific procedures for VT-2 visual examination (2) This code case is applicable only to the performance of VT-2 examinations and may not be applied to other VT-2 functions such as verifying the adequacy of procedures and training VT-2 personnel	14	NO	1997A	Past applicability date. Incorporated into the Code.

Table 1 NRC Approved Code Cases				
Code Cases	**Rev**	**Used at VEGP?**	**Applicability Date Up To and Including**	**Comments**
N-552 Alternative Methods - Qualification for Nozzle Inside Radius Section from the Outside Surface *NRC Conditions for use:* To achieve consistency with the 10 CFR 50.55a rule change published September 22, 1999 (64 FR 51370), incorporating Appendix VIII, "Performance Demonstration for Ultrasonic Examination Systems," to Section XI, add the following to the specimen requirements: "At least 50 percent of the flaws in the demonstration test set must be cracks and the maximum misorientation must be demonstrated with cracks. Flaws in nozzles with bore diameters equal to or less than 4 inches may be notches. Add to detection criteria, "The number of false calls must not exceed three."	14&15	**YES**	2004	Only used when exams are from the OD.
N-553-1 Inservice Eddy Current Surface Examination of Pressure Retaining Pipe Welds and Nozzle-to-Safe End Welds	14&15	NO	1996A	Past applicability date. Incorporated into the Code.
N-554-2 Alternative Requirements for Reconciliation of Replacement Items and Addition of New Systems	14	NO	1998	Past applicability date.
N-554-3 Alternative Requirements for Reconciliation of Replacement Items and Addition of New Systems	15	NO	2002A	Past applicability date.
N-557-1 In-Place Dry Annealing of a PWR Reactor Vessel *NRC Conditions for use:* The secondary stress allowable of 3Sm, shown in Figure 1 of the Code Case, must be applied to the entire primary plus secondary stress range during the anneal	14&15	NO	2005A	

Table 1 NRC Approved Code Cases				
Code Cases	**Rev**	**Used at VEGP?**	**Applicability Date Up To and Including**	**Comments**
N-566-2 Corrective Action for Leakage Identified at Bolted Connections	14&15	**YES**	2004	
N-567-1 Alternative Requirements for Class 1, 2, and 3 Replacement Components *NRC Conditions for use:* The component used for repair/replacement must have been manufactured, procured, and controlled as a safety-related component under an NRC-approved Quality Assurance program meeting the requirements of Appendix B to 10 CFR Part 50	14&15	NO	1998	Past applicability date. Incorporated into the Code.
N-568 Alternative Examination Requirements for Welded Attachments *NRC Conditions for use:* This Code Case may only be used for examination of the accessible portions of lugs on piping where riser clamps (i.e., clamps on vertical runs of pipe) obstruct access to welded surfaces	14	NO	1990	Past applicability date. Incorporated into the Code.
N-569-1 Alternative Rules for Repair by Electrochemical Deposition of Class 1 and 2 Steam Generator Tubing *NRC Conditions for use:* Steam generator tube repair methods require prior NRC approval through the Tech Specs. This Code Case does not address certain aspects of this repair, e.g., the qualification of the inspection and plugging criteria necessary for staff approval of the repair method. In addition, if the user plans to "reconcile," as described in Footnote 2, the reconciliation is to be performed in accordance with IWA-4200 in the 1995 Edition, 1996 Addenda of ASME Section XI.	14&15	NO	2005A	Steam generator tube repair methods require prior NRC approval through the Tech Specs.
N-573	14&15	NO	1996A	Past applicability date. Incorporated into

Table 1 NRC Approved Code Cases				
Code Cases	**Rev**	**Used at VEGP?**	**Applicability Date Up To and Including**	**Comments**
Transfer of Procedure Qualification Records Between Owners				the Code.
N-576-1 Repair of Class 1 and 2 SB-163, UNS N06600 Steam Generator Tubing *NRC Conditions for use:* Steam generator tube repair methods require prior NRC approval through the Technical Specifications. This Code Case does not address certain aspects of this repair, e.g., the qualification of inspection and plugging criteria necessary for staff approval of the repair method. In addition, if the user plans to "reconcile," as described in the footnote, the reconciliation is to be performed in accordance with IWA-4200 in the 1995 Edition, 1996 Addenda of ASME Section XI.	14&15	NO	2005A	Steam generator tube repair methods require prior NRC approval through the Tech Specs
N-583 Annual Training Alternative *NRC Conditions for use:* (1) Supplemental practice shall be performed on material or welds that contain cracks, or by analyzing prerecorded data from material or welds that contain cracks (2) The training must be completed no earlier than 6 months prior to performing ultrasonic examinations at a licensee's facility	14&15	NO	1998	Past applicability date. Incorporated into the Code.
N-586 Alternative Additional Examination Requirements for Class 1, 2, and 3 Piping, Components, and Supports *NRC Conditions for use:* The engineering evaluations addressed under Item (a) and the additional examinations addressed under Item (b) shall be performed during this outage. If the additional examinations performed under Item (b) reveal indications exceeding the applicable acceptance criteria of Section XI, the engineering evaluations and the examinations shall be further extended to include additional evaluations and examinations at this outage.	14	NO	2004	Use Code Case N-586-1.

Table 1 NRC Approved Code Cases				
Code Cases	**Rev**	**Used at VEGP?**	**Applicability Date Up To and Including**	**Comments**
N-586-1 Alternative Additional Examination Requirements for Class 1, 2, and 3 Piping, Components, and Supports	15	**YES**	2005A	May be used for root cause scope expansion in lieu of 2003A Code requirements.
N-588 Attenuation to Reference Flaw Orientation of Appendix G for Circumferential Welds in reactor vessels.	14	NO	1997A	Past applicability date. Incorporated into the Code.
N-592 ASNT Central Certification Program	14	NO	1998	Past applicability date. Incorporated into the Code.
N-593 Alternative Examination Requirements for Steam Generator Nozzle to Vessel Welds *NRC Conditions for use*: Essentially 100 percent (not less than 90 percent) of the examination volume A-B-C-D-E-F-G-H must be inspected.	14&15	NO	2004	NA for Vogtle.

Table 1 NRC Approved Code Cases				
Code Cases	**Rev**	**Used at VEGP?**	**Applicability Date Up To and Including**	**Comments**
N-597-1 Requirements for Analytical Evaluation of Pipe Wall Thinning *NRC Conditions for use:* (1) Code Case must be supplemented by the provisions of EPRI Nuclear Safety Analysis Center Report 202L-R2, April 1999, "Recommendations for an Effective Flow Accelerated Corrosion Program," for developing the inspection requirements, the method of predicting the rate of wall thickness loss, and the value of the predicted remaining wall thickness. As used in NSAC-202L-R2, the terms "should" and "shall" have the same expectation of being completed. (2) Components affected by flow-accelerated corrosion to which this Code Case are applied must be repaired or replaced in accordance with the construction code of record and Owner's requirements or a later NRC approved edition of Section III of the ASME Code prior to the value of t_p reaching the allowable minimum wall thickness, t_{min}, as specified in -3622.1(a)(1) of this Code Case. Alternatively, use of the Code Case is subject to NRC review and approval. (3) For Class 1 piping not meeting the criteria of -3221, the use of evaluation methods and criteria is subject to NRC review and approval. (4) For those components that do not require immediate repair or replacement, the rate of wall thickness loss is to be used to determine a suitable inspection frequency so that repair or replacement occurs prior to reaching allowable minimum wall thickness, t_{min}. (5) For corrosion phenomenon other than flow accelerated corrosion, use of the Code Case is subject to NRC review and approval. Inspection plans and wall thinning rates may be difficult to justify for certain degradation mechanisms such as MIC and pitting	14	NO	2004	Use Code Case N-597-2.

Table 1 NRC Approved Code Cases				
Code Cases	**Rev**	**Used at VEGP?**	**Applicability Date Up To and Including**	**Comments**
N-597-2 Requirements for Analytical Evaluation of Pipe Wall Thinning *NRC Conditions for use:* (1) Code Case must be supplemented by the provisions of EPRI Nuclear Safety Analysis Center Report 202L-R2,"Recommendations for an Effective Flow Accelerated Corrosion Program" (Ref. 6), April 1999, for developing the inspection requirements, the method of predicting the rate of wall thickness loss, and the value of the predicted remaining wall thickness. As used in NSAC-202L-R2, the term "should" is to be applied as "shall" (i.e., a requirement). (2) Components affected by flow-accelerated corrosion to which this Code Case are applied must be repaired or replaced in accordance with the construction code of record and Owner's requirements or a later NRC approved edition of Section III, "Rules for Construction of Nuclear Power Plant Components," of the ASME Code (Ref. 7) prior to the value of t_p reaching the allowable minimum wall thickness, t_{min}, as specified in -3622.1(a)(1) of this Code Case. Alternatively, use of the Code Case is subject to NRC review and approval per 10 CFR 50.55a(a)(3). (3) For Class 1 piping not meeting the criteria of -3221, the use of evaluation methods and criteria is subject to NRC review and approval per 10 CFR 50.55a(a)(3). (4) For those components that do not require immediate repair or replacement, the rate of wall thickness loss is to be used to determine a suitable inspection frequency so that repair or replacement occurs prior to reaching allowable minimum wall thickness, t_{min}. (5) For corrosion phenomenon other than flow accelerated corrosion, use of the Code Case is subject to NRC review and approval. Inspection plans and wall thinning rates may be difficult to justify for certain degradation mechanisms such as MIC and pitting.	15	**YES**	2005A	For wall thinning, this code case may be used to justify delay of repair/replacement based on analytical evaluation.
N-598 Alternative Requirements to Required Percentages of Examinations	14	NO	1997A	Past applicability date. Incorporated into the Code.

Table 1 NRC Approved Code Cases				
Code Cases	**Rev**	**Used at VEGP?**	**Applicability Date Up To and Including**	**Comments**
N-599 Alternatives to Qualification of Nondestructive Examination Personnel for Inservice Inspection of Metal (Class MC) and Concrete (Class CC) Containments *NRC Conditions for use:* This Code Case may not be used when a licensee updates to the 1992 or later Edition of Section XI that requires the use of ANSI/ASNT CP-189, "Standard for Qualification and Certification of Nondestructive Testing Personnel	14	NO	1997A	Past applicability date. Incorporated into the Code with NRC caveats
N-600 Transfer of Welder, Welding Operator, Brazer, and Brazing Operator Qualifications Between Owners	14&15	**YES**	2005A	May be used if necessary.
N-601 Extent and Frequency of VT-3 Visual Examination for Inservice Inspection of Metal Containments	14	NO	1997A	Past applicability date. Incorporated into the Code.
N-603 Alternative to the Requirements of IWL-2421, Sites with Two Plants	14	NO	1996A	Past applicability date. Incorporated into the Code.
N-604 Alternative to Bolt Torque or Tension Test Requirements of Table IWE-2500-1, Category E-G, Item E8.20	14	NO	1997A	Past applicability date. Incorporated into the Code.
N-605 Alternative to the Requirements of IWE-2500(b) for Augmented Examination of Surface Areas	14	NO	1997A	Past applicability date. Incorporated into the Code.

Table 1 NRC Approved Code Cases				
Code Cases	**Rev**	**Used at VEGP?**	**Applicability Date Up To and Including**	**Comments**
N-606-1 Similar and Dissimilar Metal Welding Using Ambient Temperature Machine GTAW Temper Bead Technique for BWR CRD Housing/Stub Tube Repairs *NRC Conditions for use*: Prior to welding, an examination or verification must be performed to ensure proper preparation of the base metal, and that the surface is properly contoured so that an acceptable weld can be produced. The surfaces to be welded, and surfaces adjacent to the weld, are to be free from contaminants, such as, rust, moisture, grease, and other foreign material or any other condition that would prevent proper welding and adversely affect the quality or strength of the weld. This verification is to be required in the welding procedures.	14&15	NO	2005A	BWR only.
N-609 Alternative Requirements to Stress-Based Selection Criteria for Category B-J Welds	14&15	**YES**	2005A	
N-613-1 Ultrasonic Examination of Penetration Nozzles in Vessels, Category B-D, Item Nos. B3.10 and B3.90, Reactor Nozzle-to-Vessel Welds, Figs. IWB-2500-7(a), (b), and (c).	14&15	**YES**	2005A	
N-616 Alternative Requirements for VT-2 Visual Examination of Classes 1, 2, 3 Insulated Pressure Retaining Bolted Connections *NRC Conditions for use*: (1) Insulation must be removed for VT-2 examination during the system pressure test for any 17-4 PH stainless steel of 410 stainless steel stud or bolt aged at a temperature below 1100^{0}F or with hardness above R_C30. (2) For A-286 stainless steel studs or bolts, the preload must be verified to be below 100 KSI or the thermal insulation must be removed and the joint visually examined. (3) Prior to conducting the VT-2 of Class 2 and 3 components not required to operate during normal plant operation, a 10 minute holding time is required after	14&15	NO	2002A	Past applicability date. Incorporated into the Code.

Table 1 NRC Approved Code Cases				
Code Cases	**Rev**	**Used at VEGP?**	**Applicability Date Up To and Including**	**Comments**
attaining test pressure. Prior to conducting the VT-2 of Class 2 and 3 components required to operate during normal plant operation, no holding time is required, provided the system has been in operation for at least 4 hours for insulated components or 10 minutes for non-insulated components.				
N-617 Alternative Examination Distribution Requirements for Table IWC-2500-1, Examination Category C-G, Pressure Retaining Welds in Pumps and Valves	14&15	NO	1999A	Past applicability date. Incorporated into the Code.
N-619 Alternative Requirements for Nozzle Inner Radius Inspections for Class 1 Pressurizer and Steam Generator Nozzles *NRC Conditions for use*: In lieu of a UT examination, licensees may perform a visual examination with enhanced magnification that has a resolution sensitivity to detect a 1-mil width wire or crack, utilizing the allowable flaw length criteria of Table IWB-3512-1 with limiting assumptions on the flaw aspect ratio. The provisions of Table IWB-2500-1, Examination Category B-D, continue to apply except that, in place of examination volumes, the surfaces to be examined are the external surfaces shown in the figures applicable to this table.	14&15	NO	1998	Past applicability date. Incorporated into the Code.
N-623 Deferral of Inspections of Shell-to-Flange and Head-to-Flange Welds of a Reactor Vessel	14&15	NO	1998	Past applicability date. Incorporated into the Code.
N-624 Successive Inspections	14&15	**YES**	2005A	
N-629 Use of Fracture Toughness Test Data to Establish Reference Temperature for Pressure Retaining Materials	14&15	**YES**	2005A	Use if needed.
N-638-1 Similar and Dissimilar Metal Welding Using Ambient Temperature Machine GTAW Temper Bead Technique *NRC Conditions for use*: UT volumetric examinations shall be performed with personnel and procedures	14&15	**YES**	2005A	Use by referencing in the repair plan.

Table 1 NRC Approved Code Cases				
Code Cases	**Rev**	**Used at VEGP?**	**Applicability Date Up To and Including**	**Comments**
qualified for the repaired volume and qualified by demonstration using representative samples which contain construction type flaws. The acceptance criteria of NB-5330 in the 1989 Edition through the 2000 Addenda of Section III apply to all flaws identified within the repaired volume.				
N-639 Alternative Calibration Block Material, Section XI *NRC Conditions for use*: Chemical ranges of the calibration block may vary from the materials specification if: (1) the calibration block material is produced under an accepted industry specification or standard, and (2) the phase and grain shape are maintained in the same ranges produced by the thermal process required by the material specification	14&15	**YES**	2005A	See Reg. Guide 1.147 caveats
N-640 Alternative Reference Fracture Toughness for Development of P-T Limit Curves	14&15	NO	1998	Past applicability date. Incorporated into the Code.
N-641 Alternative Pressure-Temperature Relationship and Low Temperature Overpressure Protection System Requirements	14&15	NO	2005A	
N-643 Fatigue Crack Growth Rate Curves for Ferritic Steels in PWR Water Environment	14	NO	2004	
N-643-2 Fatigue Crack Growth Rate Curves for Ferritic Steels in PWR Water Environment	15	**YES**	2005A	Use by referencing in the repair plan.
N-647 Alternative to Augmented Examination Requirements of IWE-2500 *NRC Conditions for use:* A VT-1 examination is to be used in lieu of the "detailed visual examination." (Note: Draft Regulatory Guide DG-1070, "Sampling Plans Used for Dedicating Simple Metallic Commercial Grade Items for Use in Nuclear Power Plants," is being developed to provide acceptable guidelines for sampling criteria.)	14&15	NO	2000A	Past applicability date. Incorporated into the Code with NRC caveats.

Table 1 NRC Approved Code Cases				
Code Cases	**Rev**	**Used at VEGP?**	**Applicability Date Up To and Including**	**Comments**
N-648-1 Alternative Requirements for Inner Radius Examination of Class 1 Reactor Vessel Nozzles NRC Conditions for use: In place of a UT examination, licensees may perform a visual examination with enhanced magnification that has a resolution sensitivity to detect a 1-mil width wire or crack, utilizing the allowable flaw length criteria of Table IWB-3512-1 with limiting assumptions on the flaw aspect ratio. The provisions of Table IWB-2500-1, Examination Category B-D, continue to apply except that, in place of examination volumes, the surfaces to be examined are the external surfaces shown in the figures applicable to this table.	14&15	**YES**	2005A	See Reg. Guide 1.147 caveats.
N-649 Alternative Requirements for IWE-5240 Visual Examination	14&15	NO	2000A	Past applicability date. Incorporated into the Code.
N-651 Ferritic and Dissimilar Metal Welding Using SMAW Temper Bead Technique Without Removing the Weld Bead Crown for the First Layer.	14&15	NO	2005A	Temper Bead Welding
N-652 Alternative Requirements to Categorize B-G-1, B-G-2, and C-D Bolting Exam Methods and Selection Criteria.	14	NO	2001	Past applicability date. Incorporated into the Code.
N-652-1 Alternative Requirements to Categorize B-G-1, B-G-2, and C-D Bolting Exam Methods and Selection Criteria.	15	NO	2003A	Code Case has editorial changes when compared to the 2003A. Use the 2003 Addenda.
N-658 Qualification Requirements for UT Examination of Wrought Austenitic Piping Welds.	14&15	NO	2001	Past applicability date. Incorporated into the Code.
N-660 Risk-Informed Safety Classification for Use in Risk-Informed Repair/Replacement Activities *NRC Conditions for use:*	14&15	NO	2005A	

Table 1 NRC Approved Code Cases				
Code Cases	**Rev**	**Used at VEGP?**	**Applicability Date Up To and Including**	**Comments**
The Code Case must be applied only to ASME Code Class 2 and 3, and non-Code Class pressure retaining components and their associated supports.				
N-661 Alternative Requirements for Wall Thickness Restoration of Class 2 and 3 Carbon Steel Piping for Raw Water Service *NRC Conditions for use:* (a) If the root cause of the degradation has not been determined, the repair is only acceptable for one cycle. (b) Weld overlay repair of an area can only be performed once in the same location. (c) When through-wall repairs are made by welding on surfaces that are wet are exposed to water, the weld overlay repair is only acceptable until the next refueling outage.	14&15	NO	2005A	
N-662 Alternate Repair/Replacement Requirements for Items Classified in Accordance with Risk-Informed Processes. *NRC Conditions for use:* The Code Case must be applied only to ASME Code Class 2 and 3, and non-Code Class pressure retaining components and their associated supports.	14&15	NO	2005A	
N-663 Alternative Examination Requirements for Class 1 and 2 Surface Examinations	14&15	YES	2005A	
N-664 Performance Demonstration Requirements for Exam of Unclad RPV Welds, Excluding Flange Welds	14&15	NO	2005A	Not applicable to Vogtle
N-665 Alternate Requirements for Beam Angle Measurements Using Refracted	15	NO	2005A	Per the Code Case may only be used through 2002A.

Table 1 NRC Approved Code Cases				
Code Cases	**Rev**	**Used at VEGP?**	**Applicability Date Up To and Including**	**Comments**
Longitudinal Wave Search Units				
N-683 Method for Determining Maximum Allowable False Calls When Performing Single-Sided Access Performance Demonstration in Accordance With, Appendix VIII, Supplements 4 and 6	15	**YES**	2002A	Modifies Appendix VIII, 2001 Edition.
N-685 Lighting Requirements for Surface Examination	15	**YES**	2003A	
N-686 Alternate Requirements for Visual Examinations, VT-1, VT-2, and VT-3	15	NO	2000A	SNC plans to implement N-686-1 once it's approved by the NRC.
N-694-1 Evaluation Procedure and Acceptance Criteria for PWR Reactor vessel Head Penetration Nozzles	15	**YES**	2003A	Use by referencing in the repair plan.
N-695 Qualification Requirements for Dissimilar Metal Piping Welds	14&15	**YES**	2003A	Modifies Appendix VIII, 2001 Edition.
N-696 Qualification requirements for Appendix VIII Piping Examinations Conducted From the Inside Surface	15	**YES**	2003A	Modifies Appendix VIII, 2001 Edition.
N-697 PWR Examination and Alternative Examination Requirements for Pressure Retaining Welds in Control Rod Drive and Instrument Nozzle Housings	15	NO	2003A	
N-700 Alternative Rules for Selection of Classes 1, 2, and 3 Vessel Welded Attachments for Examination	15	**YES**	2003A	
N-706 Alternative Examination Requirements of Table IWB-2500-1 and IWC-2500-1 for PWR Stainless Steel Residual and Regenerative Heat Exchangers	15	**YES**	2005A	