Structural Integrity Associates, Inc. **CALCULATION PACKAGE**	**File No.: 0800368.320** **Project No.: 0800368** Quality Program: ☒ Nuclear ☐ Commercial

PROJECT NAME:
Davis-Besse Phase 2 Alloy 600

CONTRACT NO.:
49151, Rev.1

CLIENT:	**PLANT:**
Welding Services, Inc (WSI)	Davis-Besse Nuclear Power Station, Unit 1

CALCULATION TITLE:
Optimized Weld Overlay Sizing for the 28" I.D. Outlet/Discharge Reactor Coolant Pump Nozzle

Document Revision	Affected Pages	Revision Description	Project Manager Approval Signature & Date	Preparer(s) & Checker(s) Signatures & Date
0	1 - 17 A-1 - A-9 B-1 - B-13	Initial Issue	Tony Giannuzzi AJG 01/27/09	Sandra Sowah SS 01/27/09 Peihua Jing PJ 01/27/09 Haiyang Qian MQ 01/27/09
1	1 - 17 A-1 - A-9 B-1 - B-13	Revised Component Dimensions and Loads	Angah Miessi GAM 05/27/09	Sandra Sowah SS 5/27/09 Checkers: Haiyang Qian MQ 5/27/09 Nader Sadeghi NS 5/27/09

Table of Contents

List of Tables

List of Figures

1.0 INTRODUCTION

A weld overlay repair is being designed for the 28" I.D. Outlet/Discharge Reactor Coolant Pump (RCP) safe end-to-elbow welds at the Davis-Besse Nuclear Power Station, Unit 1. The purpose of this calculation package is to determine the required structural sizing for an optimized weld overlay (OWOL) repair of these welds, based on plant specific geometry and loadings and the design requirements of the Relief Request [9].

2.0 DESCRIPTION OF CONFIGURATION AND REPAIR PROCESS

The pump discharge nozzles are fabricated from A-351, Grade CF8M cast stainless steel [10, (pg. 1 of 4)], the safe end is A-376, Type 316 stainless steel [10, (pg. 1 of 4)], and the attached elbow is A-516, Grade 70 carbon steel [10, (pg. 1 of 4)]. The material of the dissimilar metal weld (DMW) between the safe-end and elbow is Alloy 82/182 [10, (pg. 1 of 4)], and the stainless steel weld between the nozzle and safe-end is assumed to be Type 308 stainless steel deposited with the submerged arc welding (SAW) process as a conservative lower bound.

The optimized overlay repair will be performed using primary water stress corrosion cracking (PWSCC) resistant Alloy 52M material deposited around the circumference of the configuration. The overlay material will be deposited using the gas tungsten arc welding (GTAW) process.

3.0 ASME CODE CRITERIA

The basis for sizing an optimized weld overlay (OWOL) is to utilize the outer 25 percent of the existing weld thickness and to provide sufficient material over the existing weld and base metal such that the ASME Section XI Appendix C flaw acceptance criteria are met if there is a flaw beneath the weld overlay and outer 25 percent of the existing weld. The basis for design of the OWOL is provided in MRP-169 [1, 2].

The ASME Code Section XI Code of Record for Davis-Besse is the 1995 Edition with Addenda through 1996 [3]. Safety factors are provided in Appendix C of this Code for evaluation of flaws in austenitic stainless steel piping. These safety factors (2.77 for Normal/Upset (N/U) loadings (Service Level A/B) and 1.39 for Faulted (F) (Service Level D) are used for the weld overlay sizing. The flow stress is taken as $3S_m$ for the affected materials as defined in Section XI, Appendix C [3].

In the evaluation of flaws using net section collapse criteria, a Z-factor is employed to correct the solution for low toughness materials. These factors are provided in ASME Section XI, Appendix C, Section C-3320 for stainless steel and in Appendix H, Section H-6300 for ferritic materials. A proposed Z-factor for Alloy 600 materials is provided in Reference 4.

4.0 WELD OVERLAY THICKNESS SIZING

Appendix B provides a method and spreadsheets for evaluating the thickness for optimized weld overlays where separate material properties and geometry may be considered for the base material and the overlay. This method is utilized in this calculation for the OWOL where credit is taken for the outer 25% of the existing weld thickness (excluding consideration of the underlying cladding). Although only the weld between the safe-end and elbow is constructed of PWSCC-susceptible Alloy 82/182 material, the overlay may extend over the stainless steel weld between the safe-end and the nozzle to accommodate future inspections.

Thus for conservatism, it is also assumed that a flaw with depth of 75 percent of the base material and 360° in circumference will exist in the stainless nozzle-to-safe end weld. For the safe end-to-elbow weld, the presence of the cladding on the elbow side of the weld is neglected, consistent with ASME Section III [5] design rules.

4.1 Loads

The design of the OWOL is based on the normal operating pressure of 2255 psig and a normal operating temperature of 556°F [10, (pg. 1 of 4)]. The following service level load combinations are used to determine the weld overlay design:

Primary Loads:

Service Level A/B (Normal/Upset):	Deadweight (DW) + Operating Basis Earthquake (OBE)
Service Level C (Emergency):	DW + SSE
Service Level D (Faulted) :	DW + SRSS (SSE+LOCA)

Given the low toughness materials, thermal forces and moments must be considered. The resulting loads are then used as inputs for the OWOL spreadsheet calculations shown in Appendix A. Thus:

Total Loads:

Service Level A/B (Normal/Upset):	Deadweight (DW) + OBE + TH
Service Level C (Emergency):	DW + SSE +TH
Service Level D (Faulted) :	DW + SRSS (SSE+LOCA)+TH

[redacted]

[redacted]

[redacted]

[redacted]

[redacted]

[redacted]	[redacted]	[redacted]
[redacted]	[redacted]	[redacted]

[redacted]

[redacted]

[redacted]	[redacted]	[redacted]	[redacted]
[redacted]	[redacted]	[redacted]	[redacted]
[redacted]	[redacted]	[redacted]	[redacted]
[redacted]	[redacted]	[redacted]	[redacted]
[redacted]	[redacted]	[redacted]	[redacted]

[redacted]

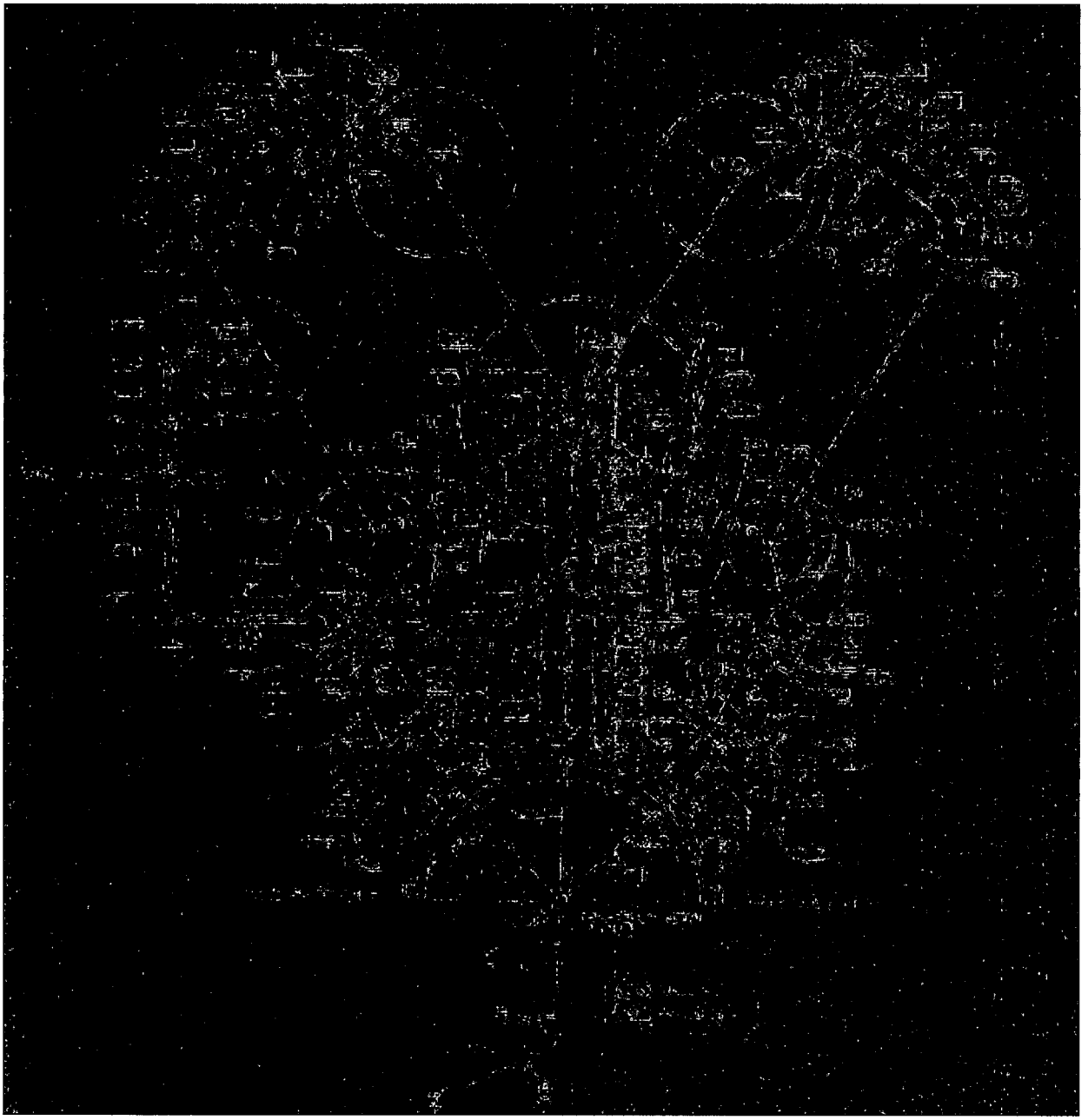

[redacted]

[redacted]

[redacted]

[redacted]

4.2 Material properties

Table 3 shows the material properties for the materials considered in this analysis, including the allowable stress intensity, yield strength, ultimate tensile strength from ASME Code, Section II, Part D [7]. The properties are interpolated between 500°F and 600°F for the operating temperature of 556°F [10, (pg. 1 of 4)].

Table 3: Material Properties for RCP Nozzle/Piping at 556°F

Component/Material	ASME Code, Section II, Part D Material Designation	S_y (ksi)	S_m (ksi)	S_u (ksi)	σ_{flow} (ksi)
RCP Nozzle A-351, Grade CF8M	Cast Stainless Steel	19.3	17.4	67.2	52.2
DM Weld Alloy 600 (82/182)	SB-166 (N06600)	30.1	23.3	80.0	69.9
Overlay Alloy 690 (Alloy 52M)	SB 166 (N06690) Bar/Rod	27.7	23.3	80.5	69.9
RCP Safe-End A-376, Type 316	Stainless Steel	19.4	17.4	71.8	52.3
RCP Piping A-516, Grade 70	Carbon Steel	29.9	19.9	70.0	59.8
Stainless Steel Weld (1)	Stainless Steel Type 316 (Assumed)	19.4	17.4	71.8	52.3

Note: 1. Material properties of stainless steel weld are conservatively assumed to be the same as those of the nozzle.

4.3 Geometry

[redacted]

4.4 Z-factor Calculation

Multiple locations along the RCP nozzle assembly are considered for the weld overlay sizing. For this calculation, the properties for the existing base material under the overlay are based on either the material at the side of the weld or the weld material itself at each of the locations considered, using associated material properties and Z-factors.

The Z-factor is calculated for each material at the nozzle, the overlay, the DMW, the safe end, and the elbow.

At the nozzle:
The nozzle is identified as cast stainless steel. Per 1995 ASME Code Section XI Appendix C [3], Section C-3320, the Z-factors are calculated for austenitic weld materials fabricated using shielded metal arc (SMAW) or submerged arc (SAW) welding:

$$Z = 1.15[1+0.013(D-4)] \text{ for SMAW} \quad (1)$$
$$Z = 1.30[1+0.010(D-4)] \text{ for SAW} \quad (2)$$

Where:

D = outside diameter of component, in.

For conservatism, the Z-factors for the SAW (Equation 2) are applied for stainless steel weld and the cast austenitic stainless steel.

For the overlay:
The overlay is identified as a GTAW weld, thus for Alloy 52M, the Z-factor is 1 per ASME Code Section XI Appendix C [3] and Reference 14.

For the DMW:
The DMW weld material is Alloy 82/182. Thus, the Z-factor is taken from Reference 4. Per Reference 4, the Z-factors are calculated as follows:

$$Z = 0.00065D^3 - 0.01386D^2 + 0.1034D + 0.902 \quad \text{for } D \leq 8''$$

$$Z = 0.0000022D^3 - 0.0002D^2 + 0.0064D + 1.1355 \quad \text{for } D \geq 8''$$

where:

D = outside diameter of component, in.

A Z-factor of 1.21 is calculated for the DMW weld using D=34.1" from Table 4.

For the safe end:
Per Reference 14 and ASME Code Section XI Appendix C [3], the safe end Z-Factor is 1, since it is identified as austenitic stainless steel base material.

For the elbow:
The elbow is identified as carbon steel. The Z-factors for ferritic/carbon steel base metals and associated weld metals are calculated from the 1995 ASME Section XI Appendix H, Section H-6310. Depending on the case, the Z-factor is calculated using Equations 3 or 4 shown below.

Case 1: For Seamless/Welded Wrought Carbon Steel pipe and pipe fitting with $S_y < 40$ ksi and for welds made using carbon steel electrodes.

$$Z = 1.20[1+0.021A(NPS-4)] \quad (3)$$

Case 2: For carbon and alloy steel (including SAW and SMAW welds) with $S_y > 40$ ksi and Tensile Strength < 80 ksi.

$$Z = 1.35[1+0.0184A(NPS-4)] \quad (4)$$

The area (A) is calculated per value of R.

$$A = [0.125(R/t) - 0.25]^{0.25} \text{ for } 5 \leq R/t \leq 10$$
$$A = [0.4(R/t) - 3.0]^{0.25} \text{ for } 10 \leq R/t \leq 20$$

Where:

NPS	=	nominal pipe size, in.
R	=	mean radius, in.
t	=	thickness, in.

Since the elbow base material is considered in this evaluation and, per Table 3, $S_y < 40$ ksi, the Z-factor for Case 1 (Equation 3) is applied for the carbon steel elbow.

The Z-factors calculated for each component are summarized in Table 5.

Table 5: Z-factors for RCP Nozzle/Piping

Component/Material	ASME Code, Section II, Part D Material Designation	Z-factor
RCP Nozzle A-351, Grade CF8M	Cast Stainless Steel	1.69
DM Weld Alloy 600 (82/182)	SB-166 (N06600) Bar	1.21
Overlay Alloy 690 (Alloy 52M)	SB 166 (N06690) Bar/Rod	1.00
RCP Safe-End A-376, Type 316	Stainless Steel	1.00
RCP Piping A-516, Grade 70	Carbon Steel	1.83
Stainless Steel Weld, Nozzle Side	Stainless Steel Type 316 (Assumed)	1.69
Stainless Steel Weld, Safe End Side	Stainless Steel Type 316 (Assumed)	1.68

4.5 OWOL Sizing

As shown in Figure 2, a total of eight locations are setup for initial consideration of the sizing calculation. The geometry and material properties associated with each location are given in Table 6.

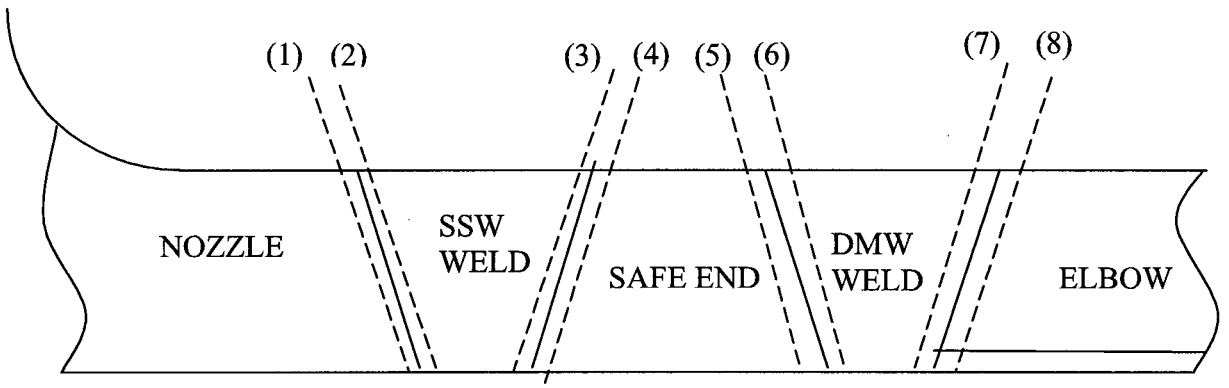

Figure 2: Initial Locations of OWOL Sizing (Schematic Diagram)

Table 6: Properties at each OWOL Sizing Locations

Location	1 Nozzle	2 Nozzle/SSW	3 SE Weld/SSW	4 SE/SSW
Do, in	34.2	34.2	33.5	33.5
Di, in	28.166	28.166	28.166	28.166
Z	1.69	1.69	1.68	1.00
σ_{flow} (ksi)	52.2	52.2	52.3	52.3
Location	**5** **SE/DMW**	**6** **SE Weld/DMW**	**7** **Elbow/DMW**	**8** **Elbow**
Do, in	33.5	33.5	34.1	34.1
Di, in	28.000	28.000	28.000	28.625
Z	1.00	1.21	1.21	1.83
σ_{flow} (ksi)	52.3	69.9	69.9	59.8

Among these eight locations, Location (1) and Location (2) are reduced to one case, since SSW weld material (Type 316 stainless steel) properties are assumed to be the same as those of the nozzle. Location (3) is chosen between Locations (3) and (4), since the Z-factor at location (3) is higher, thus yields more conservative results. For the same reason, Location (6) is chosen over Location (5). Location (8) is considered due to possible susceptibility to fatigue crack propagation initiated from the weld butter at the interface with the cladding due to PWSCC. For Locations (7) and (8), Location (8) governs because it has a higher Z-factor and a lower flow stress. In summary, four locations are chosen to be evaluated, as shown in Figure 3.

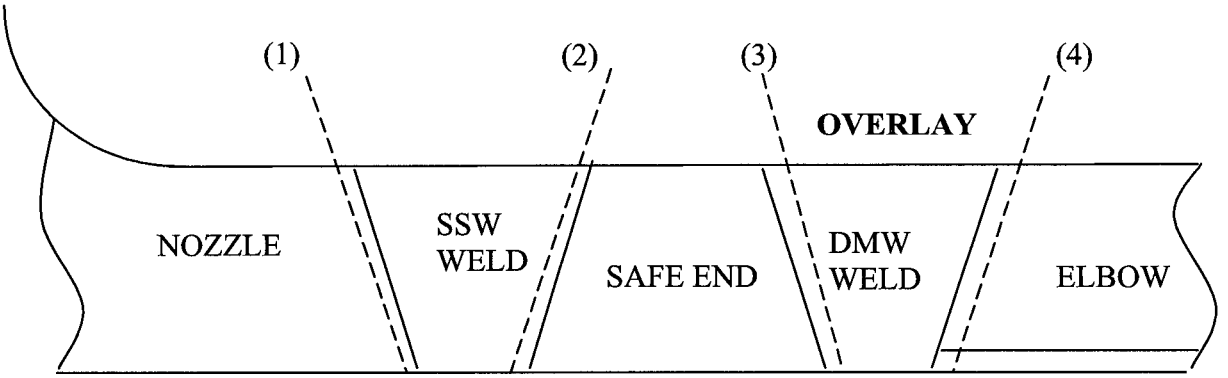

Figure 3: Final Locations of OWOL Sizing (Schematic Diagram)

Weld overlay thickness sizing is performed based on the methods presented in Appendix B. The spreadsheets discussed in Appendix B were developed to allow for rapid solution of weld overlay thickness using net section collapse methodology [8].

The weld overlay sizing (thickness) is based on both evaluation of N/U (Service Level B), and Faulted (Service Level D) conditions. Thermal is included in both N/U and F conditions for overlay sizing for thermal expansion bending stresses. The loads in Emergency (Service Level C) case is bounded by Faulted case, as shown in Table 2, and is therefore not included.

It is further assumed for conservatism that the flaw contained in the base material is 75% through the underlying material thickness and fully circumferential. In determining the limit load moment, it is assumed that the base material in compression is at the flow stress of 3 S_m, as per the requirements of Section XI, Appendix C [3].

In the determination of stresses due to elbow loadings, there is no explicit guidance in MRP-169 [1, 2] and the ASME Code, Section XI [3] for incorporation of axial forces due to piping loads in determining stress values. In this calculation for selected locations, the overlay thickness was determined excluding axial forces (as is standard for a full structural overlay) and reported. The detailed results for the OWOL sizing are shown in the spreadsheet files listed in Appendix A. The resulting thickness requirements are shown in Table 7 for N/U and F loadings with axial forces excluded.

Table 7: Optimized Weld Overlay Sizing Thickness Requirements

Flaw Location	Thickness N/U Loading (in)	Thickness F Loading (in)
Location 1, SSW, Nozzle Side	0.5287	0.5492
Location 2, SSW, Safe End Side	0.5645	0.5939
Location 3, DMW, Safe End Side	0.3251	0.3800
Location 4, DMW, Elbow Side	0.6052	0.6543

Notes: DMW = Dissimilar Metal Weld, SSW = Stainless Steel Weld

For conservatism, the thicker section on either side of each weld is taken. For the DMW weld, the minimum required overlay thickness is 0.6543 inch. For the SSW weld, the required thickness is 0.5939 inch.

5.0 WELD OVERLAY LENGTH REQUIREMENTS

The determination of the weld overlay length must consider three requirements: (1) length required for structural reinforcement, (2) length required for preservice examination access of the overlaid weld and (3) limitation on the area of the elbow surface that can be overlaid using ambient temperature temperbead welding.

5.1 Structural Reinforcement

The structural reinforcement requirements are expected to be satisfied if the weld overlay length is $0.75\sqrt{Rt}$ on either side of the susceptible weld being overlaid [6], where R is the outside radius and t is the thickness of the original pipe. In this evaluation, the overlay length is determined from shear stress calculations to assure ASME Code, Section III [5] compliance. In this evaluation, it is conservatively assumed that all axial forces are transferred from the safe end completely into the overlay and then into the elbow. No credit is taken for load transfer through the unflawed outer 25% of the base metal.

The section along the length of the overlay is evaluated for axial-radial shear due to transfer of axial load from the overlaid item to the overlay. Subparagraph NB-3227.2 [5] limits the average primary pure shear due to any loadings except Service Level D (Faulted) to $0.6S_m$. This is equivalent to half the limit of $1.2S_m$ on general primary membrane stress intensity due to Service Level C (Emergency) loadings. Thus, the shear limit of $0.5S_m$, equivalent to half of $1.0S_m$ for stress intensity, is conservatively used for the N/U load combination. For Level D (faulted) conditions, the stress intensity limit is the lesser of $2.4S_m$ or $0.7S_u$ [3], equivalent to the lesser of $1.2S_m$ and $0.35S_u$ for shear stress, using half of the tension allowable values.

Shear stress at the overlay-base material interface due to axial force through overlay equals:

$$\frac{\text{Axial force applied to overlay cross-section}}{\text{Area of overlay-base material interface beyond fusion line}} +$$

$$\frac{\text{Moment load due to attached piping}}{\text{Section modulus of area of overlay-base material interface beyond fusion line}}$$

$$=$$

$$\frac{\text{Internal pressure x } (\pi \text{ x } Ro^2_{Component})}{\text{Length of overlay-base material interface x circumference @ overlay ID}} +$$

$$\frac{\text{Applied moment}}{\text{Section modulus of overlay-base material interface band}}$$

$$= \quad P \times \pi \times R_o^2/A_s + M/S_s$$

where:

R_o = outside radius of overlaid item at weld, in.
L = length of overlay at outside surface of overlaid item on one side of crack, in.
A_s = shear area, $2\pi R_o L$, in^2
S_s = section modulus, $\pi R_o^2 L$, in^3
P = pressure, psig
M = resultant moment from piping interface loads at weld, lb-in

Thus, $\tau = P\pi R_o^2/(2\pi R_o L) + M/(\pi R_o^2 L)$

Solving for L and equating τ with the allowable shear stress (S_{allow}) yields:

$$L = [PR_o/2 + M/(\pi R_o^2)]/S_{allow},$$

where:

S_{allow} = $0.5S_m$ (Normal/Upset)
= $0.6S_m$ (Emergency)
= The lesser of $1.2S_m$ and $0.35S_u$ (Faulted)

This equation for the required weld overlay length is implemented in Table 8 for all components. The greater value of the required overlay length will be taken. The material properties are evaluated at the normal operating temperature of 556°F [10, (pg. 1 of 4)] using Section II, Part D of the ASME Code [7]. Thermal loads are not included in determining the weld overlay length since average primary pure shear is being calculated.

Table 8: Minimum Required Overlay Length

Shear length Calculation	SE Side DMW	Elbow Side DMW
Ro, in	16.75	17.03
Material	A-376 Type 316	A-516 Grade 70
Sm, ksi	17.4	19.9
Normal/Upset 0.5Sm, ksi	8.7	10.0
Emergency 0.6Sm, ksi	10.5	12.0
Faulted 1.2Sm, ksi	20.9	23.9
Su, ksi	71.8	70.0
Faulted 0.35Su, ksi	25.1	24.5
Normal/Upset L, in	3.6726	3.2028
Emergency L, in	**3.9932**	**3.4587**
Faulted L, in	3.1518	2.7074

The required overlay thickness is calculated at each side of the DMW. The design drawing implements a configuration that meets all thickness and length requirements, based on the bounding minimum values.

The lengths shown above ensure adequate shear stress transfer along the length of the weld overlay. Service Level C (Emergency) is the most limiting. This length is sufficient to transfer the imposed loads and maintain stresses (shear) within the appropriate ASME Code allowables.

5.2 Preservice Examination

Weld overlay access for preservice examination requires that the overlay length and profile be such that the overlaid weld and any adjacent welds that are to be inspected can be examined using the required NDE techniques. This requirement could cause the overlay length to be longer than required for structural reinforcement. The specific overlay length required for preservice examination is determined by qualified NDE personnel based on the examination techniques and proximity of adjacent welds to be inspected.

5.3 Area Limitation

Per Table NB-4622.7(b)-1[5], the elbow is limited by the temperbead requirements and an area of limitation calculation is required for the elbow. Thus, the total weld overlay surface area is limited to 600 in^2 on the elbow body ferritic base material per the Relief Request [9] when using ambient temperature temperbead welding to apply the overlay. Using a diameter of 34.1", the maximum length is limited to 600/ (πD_o) = 5.6" on the elbow. The minimum required overlay length on the elbow (3.4587"), determined above and shown in Table 8, is less than this limit.

6.0 CONCLUSIONS AND DISCUSSIONS

This calculation package documents the development of an optimized weld overlay design for the RCP discharge safe end-to-elbow weld at Davis-Besse Nuclear Power Station, Unit 1. Table 9 and Figure 4 summarize the minimum required overlay dimensions for an optimized overlay. This design has been based on the Relief Request [9] requirements for an optimized weld overlay.

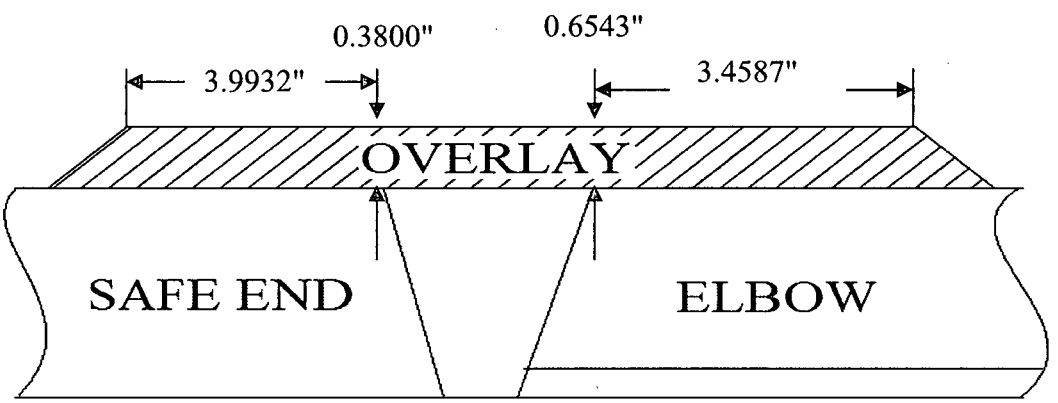

Figure 4: OWOL Geometry, Minimum Dimensions (Schematic Diagram)

Table 9: OWOL Minimum Required Overlay Dimensions

Location	Thickness, (in)	Length (in)
DMW, Elbow Side	0.6543	3.4587
DMW, SE Side	0.3800	3.9932
SSW, SE Side	0.5939	NA
SSW, Nozzle Side	0.5492	NA

7.0 REFERENCES

1. Materials Reliability Program: Technical Basis for Preemptive Weld Overlays for Alloy 82/182 Butt Welds in PWRS (MRP-169), EPRI, Palo Alto, CA and Structural Integrity Associates, Inc, San Jose CA: 2005, 1012843.

2. Materials Reliability Program: Technical Basis for Preemptive Weld Overlays for Alloy 82/182 Butt Welds in PWRS (MRP-169), Revision 1, EPRI, Palo Alto, CA: 2008, Final Report, June 2008, 1016602.

3. ASME Boiler and Pressure Vessel Code, Section XI, Rules for Inservice Inspection of Nuclear Power Plant Components, 1995 Edition with Addenda through 1996.

4. Wilkowski, G, et.al., "Determination of the Elastic-Plastic Fracture Mechanics Z-factor for Alloy 182 Weld Metal Flaws for Use in the ASME Section XI Appendix C Flaw Evaluation Procedures," PVP2007-26733, ASME PVP Conference 2007.

5. ASME Boiler and Pressure Vessel Code, Section III, Rules for Construction of Nuclear Facility Components, 2001 Edition with Addenda through 2003.

6. ASME Boiler and Pressure Vessel Code, Code Case N-740-2, "Full Structural Dissimilar Metal Weld Overlay for Repair or Mitigation of Class 1, 2, and 3 Items, Section XI, Division 1."

7. ASME Boiler and Pressure Vessel Code, Section II, Part D, Material Properties, 2001 Edition with Addenda through 2003.

8. Deardorff, A, et.al., "Net Section Plastic Collapse Analysis of Two-Layered Materials and Application to Weld Overlay Design," PVP2006-ICPVT11-93454, ASME PVP Conference 2006.

9. SI Report 0800368.401, "Proposed Relief Request In Accordance with 10 CFR 50.55a(a)(3)(i) - Alternative Provides Acceptable Level of Quality and Safety," (for revision number, refer to SI Project Revision Log, latest revision).

10. FirstEnergy Nuclear Operating Company Design Input, Rev. 1, "Inputs List – Design Data," Received 9/12/08, SI File No. 0800368.241.

[redacted]

[redacted]

14. Westinghouse Electric Corporation, "Toughness of Austenitic Stainless Steel Pipe Welds," *EPRI Report NP-4768*, Research Project 1238-2, Topical Report, Electric Power Research Institute, October 1986.

[redacted]

[redacted]

Appendix A

WELD OVERLAY SIZING SPREADSHEET FILES FOR OWOL LOCATIONS AND LOADING CONDITIONS

A.1 LOCATION 4: ELBOW WITH DMW ALLOY 82/182 INTERFACE FOR NORMAL/UPSET LOADING CONDITIONS

Spreadsheet entitled "Davis_Besse_Discharge_Nozzle.xls"

Weld Overlay Sizing Based on Load Input (Version 1 - 5June08) ---- INPUT is Lt. Green ----------

Pressure,	2255	psi	Crack			Crack Pressure Fraction		Notes:	Phi Factors are reduction factors that may be applied to flow stress in each regic		
Faxial	0	kips	α,OL+Lig	0	degrees - half angle	Pipe Ligt	0		Crack face pressure fractions are portion of c	Pipe Metal Area =	267.5193
M, prim.	11581.21	in-kips	β,pipe	180	degrees - half angle	Pipe Crk	0	Stresses Using Piping Equations (Info)		Pipe Z (shell) =	2096.094
M, therm	16275.4	in-kips	a/t, pipe	0.75	a/t	WOL Crk	0	Axial Pressure =	7.067 ksi	Shell Theory Z	2096.094
								Axial Load =	0.000 ksi	Shell Theory A	267.5193
Fpress	2054.375	kips						Primary Bending =	5.525 ksi	Pipe Z (Thk. Cyl.)	2096.094
								Thermal Bending =	7.765 ksi	Pipe A (Thk. Cyl.)	267.5193

Pipe (Matl B)			WOL(Matl A)		
OD	[redacted]		-		
t	2.717	in	t overlay	0.605232	in
Sflow	59.8	ksi	Sflow	69.9	ksi
Phib,t	1	-	Phia,t	1	-
Phib,c	1	-	Phia,c	1	-

Case 1 $\beta < \pi - \gamma$ Crack Above Neutral Axis
Case 2 $\beta = \pi - \gamma$ Crack To Neutral Axis or Crack Below Takes Compression
Case 3 $\beta > \pi - \gamma$ Crack Below Neutral Axis and Takes no Compression
γ = half angle up to neutral axis
Note that any weld overlay angle α must be above neutral axis and have a half angle < pipe crack half angle

Nominal Stresses (Thin Shell Solution)				
Axial Pr	7.067	ksi		
Axial Ld	0.000	ksi		
Total Axial Stress			7.067	ksi Pm
Prim. Bend. Stress			5.525	ksi Pb
Therm Bend. Stress			7.765	ksi Pe

Weld Ovrlay Z Factor	1
Base Metal Z Factor	1.83
SFm	2.77
SFb	2.77

Macros	
<cntl>shift A	Size Case 1 Overlay
<cntl>shift B	Size Case 2 Overlay
<cntl>shift C	Size Case 3 Overlay

For OL Z = 1, Pb,prim = [P'b + (SFb/SFm)Pm - Z M* Pe] / [SFb(1+M* (Z-1))] - Pm
For OL Z > 1, Pb,prim = [P'b + (SFb/SFm)Pm]/[SFb{Zol(1-M*)+Zbm(M*)}] - Pm - Pe/SFb

Case	γ, degrees	γ+β check	Limit Mom in-lb	Limit Str. P'b, ksi	M*	Pb,prim		Pb' WolZ = 1	Pb' WolZ > 1
1 $\beta < \pi - \gamma$	32.39	INVALID	112721.7	53.777	0.268	9.782427	Run Case 1 for These Results if F26 = VALID	9.782	8.103
2 $\beta = \pi - \gamma$	41.61	VALID	101764.4	48.550	0.480	5.525941	Results are for Case 2	5.526	4.485
3 $\beta > \pi - \gamma$	75.27	VALID	92930.7	44.335	0.480	4.438217	Run Case 3 for These Results if F28 = VALID	4.438	3.397

Current Results are for Case 2 Weld Overlay Thickness = .6052 inch

A.2 LOCATION 4: ELBOW WITH DMW ALLOY 82/182 INTERFACE FOR FAULTED LOADING CONDITIONS

Spreadsheet entitled "Davis_Besse_Discharge_Nozzle.xls"

Weld Overlay Sizing Based on Load Input (Version 1 - 5June08) ---- INPUT is Lt. Green ----------

Pressure,	2255	psi	Crack			Crack Pressure Fraction		Notes:	Phi Factors are reduction factors that may be applied to flow stress in each regic
Faxial	0	kips	α,OL+Lig	0	degrees - half angle	Pipe Ligt	0		Crack face pressure fractions are portion of c
M, prim.	41491.95	in-kips	β,pipe	180	degrees - half angle	Pipe Crk	0	Stresses Using Piping Equations (Info)	
M, therm	16275.4	in-kips	a/t, pipe	0.75	a/t	WOL Crk	0	Axial Pressure =	7.067 ksi
								Axial Load =	0.000 ksi
Fpress	2054.375	kips						Primary Bending =	19.795 ksi
								Thermal Bending =	7.765 ksi

Pipe Metal Area =	267.5193
Pipe Z (shell) =	2096.094
Shell Theory Z	2096.094
Shell Theory A	267.5193
Pipe Z (Thk. Cyl.)	2096.094
Pipe A (Thk. Cyl.)	267.5193

Pipe (Matl B)			WOL(Matl A)		
OD	[redacted]		-		
t	2.717	in	t overlay	0.654345	in
Sflow	59.8	ksi	Sflow	69.9	ksi
Phib,t	1	-	Phia,t	1	-
Phib,c	1	-	Phia,c	1	-

Case 1 β < π - γ Crack Above Neutral Axis
Case 2 β = π - γ Crack To Neutral Axis or Crack Below Takes Compression
Case 3 β > π - γ Crack Below Neutral Axis and Takes no Compression
γ = half angle up to neutral axis
Note that any weld overlay angle α must be above neutral axis and have a half angle < pipe crack half angle

Nominal Stresses (Thin Shell Solution)				
Axial Pr	7.067	ksi		
Axial Ld	0.000	ksi		
Total Axial Stress		7.067	ksi	Pm
Prim. Bend. Stress		19.795	ksi	Pb
Therm Bend. Stress		7.765	ksi	Pe

Weld Ovrlay Z Factor	1
Base Metal Z Factor	1.83
SFm	1.39
SFb	1.39

Macros	
<cntl>shift A	Size Case 1 Overlay
<cntl>shift B	Size Case 2 Overlay
<cntl>shift C	Size Case 3 Overlay

For OL Z = 1, Pb,prim = [P'b + (SFb/SFm)Pm - Z M* Pe] / [SFb(1+M* (Z-1))] - Pm
For OL Z > 1, Pb,prim = [P'b + (SFb/SFm)Pm]/[SFb{Zol(1-M*)+Zbm(M*)}] - Pm - Pe/SFb

Case	γ, degrees	γ+β check	Limit Mom in-lb	Limit Str. P'b, ksi	M*	Pb,prim		Pb' WolZ = 1	Pb' WolZ > 1
1 β < π - γ	33.44	INVALID	118304.4	56.440	0.241	28.96149	Run Case 1 for These Results if F26 = VALID	28.961	25.427
2 β = π - γ	42.83	VALID	107090.1	51.090	0.461	19.79489	Results are for Case 2	19.795	17.615
3 β > π - γ	75.88	VALID	97335.6	46.437	0.461	17.37288	Run Case 3 for These Results if F28 = VALID	17.373	15.193

Current Results are for Case 2 Weld Overlay Thickness = .6543 inch

A.3 LOCATION 3: DMW AT SAFE END SIDE FOR NORMAL/UPSET LOADING CONDITIONS

Spreadsheet entitled "Davis_Besse_Discharge_Nozzle.xls"

Weld Overlay Sizing Based on Load Input (Version 1 - 5June08) ---- INPUT is Lt. Green ----------

Pressure,	2255	psi	Crack			Crack Pressure Fraction		Notes:	Phi Factors are reduction factors that may be applied to flow stress in each regic
Faxial	0	kips	α,OL+Lig	0	degrees - half angle	Pipe Ligt	0		Crack face pressure fractions are portion of c
M, prim.	11581.21	in-kips	β,pipe	180	degrees - half angle	Pipe Crk	0		
M, therm	16275.4	in-kips	a/t, pipe	0.75	a/t	WOL Crk	0		

Pipe Metal Area =	265.6609		
Pipe Z (shell) =	2042.268	Stresses Using Piping Equations (Info)	
Shell Theory Z	2042.268	Axial Pressure =	6.868 ksi
Shell Theory A	265.6609	Axial Load =	0.000 ksi
Pipe Z (Thk. Cyl.)	2042.268	Primary Bending =	5.671 ksi
Pipe A (Thk. Cyl.)	265.6609	Thermal Bending =	7.969 ksi

Fpress 1987.587 kips

Pipe (Matl B)			WOL(Matl A)		
OD	33.5	in	-		
t	2.75	in	t overlay	0.325097	in
Sflow	69.9	ksi	Sflow	69.9	ksi
Phib,t	1	-	Phia,t	1	-
Phib,c	1	-	Phia,c	1	-

Case 1	$\beta < \pi - \gamma$	Crack Above Neutral Axis
Case 2	$\beta = \pi - \gamma$	Crack To Neutral Axis or Crack Below Takes Compression
Case 3	$\beta > \pi - \gamma$	Crack Below Neutral Axis and Takes no Compression

γ = half angle up to neutral axis

Note that any weld overlay angle α must be above neutral axis and have a half angle < pipe crack half angle

Nominal Stresses (Thin Shell Solution)		
Axial Pr	6.868	ksi
Axial Ld	0.000	ksi
Total Axial Stress	6.868	ksi Pm
Prim. Bend. Stress	5.671	ksi Pb
Therm Bend. Stress	7.969	ksi Pe

Weld Ovrlay Z Factor	1
Base Metal Z Factor	1.21
SFm	2.77
SFb	2.77

Macros	
<cntl>shift A	Size Case 1 Overlay
<cntl>shift B	Size Case 2 Overlay
<cntl>shift C	Size Case 3 Overlay

For OL Z = 1, Pb,prim = [P'b + (SFb/SFm)Pm - Z M* Pe] / [SFb(1+M* (Z-1))] - Pm

For OL Z > 1, Pb,prim = [P'b + (SFb/SFm)Pm]/[SFb{Zol(1-M*)+Zbm(M*)}] - Pm - Pe/SFb

Case	γ, degrees	γ+β check	Limit Mom in-lb	Limit Str. P'b, ksi	M*	Pb,prim		Pb' WolZ = 1	Pb' WolZ > 1
1 $\beta < \pi - \gamma$	25.65	INVALID	89926.8	44.033	0.527	8.024824	Run Case 1 for These Results if F26 = VALID	8.025	6.800
2 $\beta = \pi - \gamma$	34.16	VALID	80158.0	39.250	0.672	5.67075	Results are for Case 2	5.671	4.845
3 $\beta > \pi - \gamma$	73.04	VALID	74359.2	36.410	0.672	4.772507	Run Case 3 for These Results if F28 = VALID	4.773	3.946

Current Results are for Case 2 Weld Overlay Thickness = .3251 inch

A.4 LOCATION 3: DMW AT SAFE END SIDE FOR FAULTED LOADING CONDITIONS

Spreadsheet entitled "Davis_Besse_Discharge_Nozzle.xls"

Weld Overlay Sizing Based on Load Input (Version 1 - 5June08) ---- INPUT is Lt. Green ----------

Pressure,	2255	psi	Crack			Crack Pressure Fraction		Notes:	Phi Factors are reduction factors that may be applied to flow stress in each regic		
Faxial	0	kips	α,OL+Lig	0	degrees - half angle	Pipe Ligt	0		Crack face pressure fractions are portion of c	Pipe Metal Area =	265.6609
M, prim.	41491.95	in-kips	β,pipe	180	degrees - half angle	Pipe Crk	0	Stresses Using Piping Equations (Info)		Pipe Z (shell) =	2042.268
M, therm	16275.4	in-kips	a/t, pipe	0.75	a/t	WOL Crk	0	Axial Pressure =	6.868 ksi	Shell Theory Z	2042.268
								Axial Load =	0.000 ksi	Shell Theory A	265.6609
Fpress	1987.587	kips						Primary Bending =	20.317 ksi	Pipe Z (Thk. Cyl.)	2042.268
								Thermal Bending =	7.969 ksi	Pipe A (Thk. Cyl.)	265.6609

Pipe (Matl B)			WOL(Matl A)		
OD	33.5	in	-		
t	2.75	in	t overlay	0.379962	in
Sflow	69.9	ksi	Sflow	69.9	ksi
Phib,t	1	-	Phia,t	1	-
Phib,c	1	-	Phia,c	1	-

Case 1 β < π - γ Crack Above Neutral Axis
Case 2 β = π - γ Crack To Neutral Axis or Crack Below Takes Compression
Case 3 β > π - γ Crack Below Neutral Axis and Takes no Compression
γ = half angle up to neutral axis
Note that any weld overlay angle α must be above neutral axis
and have a half angle < pipe crack half angle

Nominal Stresses (Thin Shell Solution)					
Axial Pr	6.868	ksi	Weld Ovrlay Z Factor	1	Macros
Axial Ld	0.000	ksi	Base Metal Z Factor	1.21	<cntl>shift A Size Case 1 Overlay
Total Axial Stress	6.868	ksi Pm	SFm	1.39	<cntl>shift B Size Case 2 Overlay
Prim. Bend. Stress	20.317	ksi Pb	SFb	1.39	<cntl>shift C Size Case 3 Overlay
Therm Bend. Stress	7.969	ksi Pe			

For OL Z = 1, Pb,prim = [P'b + (SFb/SFm)Pm - Z M* Pe] / [SFb(1+M* (Z-1))] - Pm
For OL Z > 1, Pb,prim = [P'b + (SFb/SFm)Pm]/[SFb{Zol(1-M*)+Zbm(M*)}] - Pm - Pe/SFb

Case	γ, degrees	γ+β check	Limit Mom in-lb	Limit Str. P'b, ksi	M*	Pb,prim		Pb' WolZ = 1	Pb' WolZ > 1
1 β < π - γ	26.89	INVALID	95985.9	47.000	0.475	25.36826	Run Case 1 for These Results if F26 = VALID	25.368	22.634
2 β = π - γ	35.74	VALID	85999.6	42.110	0.637	20.31659	Results are for Case 2	20.317	18.479
3 β > π - γ	73.94	VALID	79016.9	38.691	0.637	18.14691	Run Case 3 for These Results if F28 = VALID	18.147	16.310

Current Results are for Case 2 Weld Overlay Thickness = .38 inch

A.5 LOCATION 2: SSW AT SAFE END SIDE FOR NORMAL/UPSET LOADING CONDITIONS

Spreadsheet entitled "Davis_Besse_Discharge_Nozzle.xls"

Weld Overlay Sizing Based on Load Input (Version 1 - 5June08) ---- INPUT is Lt. Green ----

Pressure,	2255	psi	Crack			Crack Pressure Fraction		Notes:	Phi Factors are reduction factors that may be applied to flow stress in each regic		
Faxial	0	kips	α,OL+Lig	0	degrees - half angle	Pipe Ligt	0		Crack face pressure fractions are portion of c	Pipe Metal Area =	258.3382
M, prim.	10344.02	in-kips	β,pipe	180	degrees - half angle	Pipe Crk	0	Stresses Using Piping Equations (Info)		Pipe Z (shell) =	1991.336
M, therm	14519.09	in-kips	a/t, pipe	0.75	a/t	WOL Crk	0	Axial Pressure =	7.081 ksi	Shell Theory Z	1991.336
								Axial Load =	0.000 ksi	Shell Theory A	258.3382
Fpress	1987.587	kips						Primary Bending =	5.195 ksi	Pipe Z (Thk. Cyl.)	1991.336
								Thermal Bending =	7.291 ksi	Pipe A (Thk. Cyl.)	258.3382

Pipe (Matl B)			WOL(Matl A)		
OD	33.5	in	-		
t	2.667	in	t overlay	0.564475	in
Sflow	52.3	ksi	Sflow	69.9	ksi
Phib,t	1	-	Phia,t	1	-
Phib,c	1	-	Phia,c	1	-

Case 1	$\beta < \pi - \gamma$	Crack Above Neutral Axis
Case 2	$\beta = \pi - \gamma$	Crack To Neutral Axis or Crack Below Takes Compression
Case 3	$\beta > \pi - \gamma$	Crack Below Neutral Axis and Takes no Compression

γ = half angle up to neutral axis

Note that any weld overlay angle α must be above neutral axis and have a half angle < pipe crack half angle

Nominal Stresses (Thin Shell Solution)				
Axial Pr	7.081	ksi		
Axial Ld	0.000	ksi		
Total Axial Stress			7.081	ksi Pm
Prim. Bend. Stress			5.195	ksi Pb
Therm Bend. Stress			7.291	ksi Pe

Weld Ovrlay Z Factor	1
Base Metal Z Factor	1.68
SFm	2.77
SFb	2.77

Macros	
<cntl>shift A	Size Case 1 Overlay
<cntl>shift B	Size Case 2 Overlay
<cntl>shift C	Size Case 3 Overlay

For OL Z = 1, Pb,prim = [P'b + (SFb/SFm)Pm - Z M* Pe] / [SFb(1+M* (Z-1))] - Pm

For OL Z > 1, Pb,prim = [P'b + (SFb/SFm)Pm]/[SFb{Zol(1-M*)+Zbm(M*)}] - Pm - Pe/SFb

Case	γ, degrees	γ+β check	Limit Mom in-lb	Limit Str. P'b, ksi	M*	Pb,prim		Pb' WolZ = 1	Pb' WolZ > 1
1 $\beta < \pi - \gamma$	32.55	INVALID	95989.5	48.204	0.250	9.031501	Run Case 1 for These Results if F26 = VALID	9.032	7.344
2 $\beta = \pi - \gamma$	41.08	VALID	86005.7	43.190	0.460	5.19358	Results are for Case 2	5.194	4.111
3 $\beta > \pi - \gamma$	73.83	VALID	80077.9	40.213	0.460	4.374972	Run Case 3 for These Results if F28 = VALID	4.375	3.292

Current Results are for Case 2 Weld Overlay Thickness = .5645 inch

A.6 LOCATION 2: SSW AT SAFE END SIDE FOR FAULTED LOADING CONDITIONS

Spreadsheet entitled "Davis_Besse_Discharge_Nozzle.xls"

Weld Overlay Sizing Based on Load Input (Version 1 - 5June08) --- INPUT is Lt. Green ---

Pressure,	2255	psi	Crack			Crack Pressure Fraction	
Faxial	0	kips	α,OL+Lig	0	degrees - half angle	Pipe Ligt	0
M, prim.	36816.33	in-kips	β,pipe	180	degrees - half angle	Pipe Crk	0
M, therm	14519.09	in-kips	a/t, pipe	0.75	a/t	WOL Crk	0
Fpress	1987.587	kips					

Notes: Phi Factors are reduction factors that may be applied to flow stress in each regic
Crack face pressure fractions are portion of c

Stresses Using Piping Equations (Info)				
Axial Pressure =	7.081	ksi	Pipe Metal Area =	258.3382
Axial Load =	0.000	ksi	Pipe Z (shell) =	1991.336
Primary Bending =	18.488	ksi	Shell Theory Z	1991.336
Thermal Bending =	7.291	ksi	Shell Theory A	258.3382
			Pipe Z (Thk. Cyl.)	1991.336
			Pipe A (Thk. Cyl.)	258.3382

Pipe (Matl B)			WOL(Matl A)		
OD	33.5	in	-		
t	2.667	in	t overlay	0.593945	in
Sflow	52.3	ksi	Sflow	69.9	ksi
Phib,t	1	-	Phia,t	1	-
Phib,c	1	-	Phia,c	1	-

Case 1	β < π - γ	Crack Above Neutral Axis
Case 2	β = π - γ	Crack To Neutral Axis or Crack Below Takes Compression
Case 3	β > π - γ	Crack Below Neutral Axis and Takes no Compression

γ = half angle up to neutral axis
Note that any weld overlay angle α must be above neutral axis
and have a half angle < pipe crack half angle

Nominal Stresses (Thin Shell Solution)			
Axial Pr	7.081	ksi	
Axial Ld	0.000	ksi	
Total Axial Stress		7.081	ksi Pm
Prim. Bend. Stress		18.488	ksi Pb
Therm Bend. Stress		7.291	ksi Pe

Weld Ovrlay Z Factor	1
Base Metal Z Factor	1.68
SFm	1.39
SFb	1.39

Macros	
<cntl>shift A	Size Case 1 Overlay
<cntl>shift B	Size Case 2 Overlay
<cntl>shift C	Size Case 3 Overlay

For OL Z = 1, Pb,prim = [P'b + (SFb/SFm)Pm - Z M* Pe] / [SFb(1+M* (Z-1))] - Pm
For OL Z > 1, Pb,prim = [P'b + (SFb/SFm)Pm]/[SFb{Zol(1-M*)+Zbm(M*)}] - Pm - Pe/SFb

Case	γ, degrees	γ+β check	Limit Mom in-lb	Limit Str. P'b, ksi	M*	Pb,prim		Pb' WolZ = 1	Pb' WolZ > 1
1 β < π - γ	33.27	INVALID	99222.0	49.827	0.233	26.49526	Run Case 1 for These Results if F26 = VALID	26.495	23.021
2 β = π - γ	41.92	VALID	89102.4	44.745	0.447	18.48826	Results are for Case 2	18.488	16.265
3 β > π - γ	74.28	VALID	82639.4	41.499	0.447	16.69775	Run Case 3 for These Results if F28 = VALID	16.698	14.474

Current Results are for Case 2 Weld Overlay Thickness = .5939 inch

A.7 LOCATION 1: NOZZLE AT SSW INTERFACE FOR NORMAL/UPSET LOADING CONDITIONS

Spreadsheet entitled "Davis_Besse_Discharge_Nozzle.xls"

Weld Overlay Sizing Based on Load Input (Version 1 - 5June08) --- INPUT is Lt. Green ----------

Pressure,	2255	psi	Crack			Crack Pressure Fraction		Notes:	Phi Factors are reduction factors that may be applied to flow stress in each regic
Faxial	0	kips	α,OL+Lig	0	degrees - half angle	Pipe Ligt	0		Crack face pressure fractions are portion of c
M, prim.	10344.02	in-kips	β,pipe	180	degrees - half angle	Pipe Crk	0	Stresses Using Piping Equations (Info)	
M, therm	14519.09	in-kips	a/t, pipe	0.75	a/t	WOL Crk	0	Axial Pressure =	6.403 ksi
								Axial Load =	0.000 ksi
Fpress	2071.518	kips						Primary Bending =	4.497 ksi
								Thermal Bending =	6.312 ksi

Pipe Metal Area =	295.0272						
Pipe Z (shell) =	2300.401						
Shell Theory Z	2300.401						
Shell Theory A	295.0272						
Pipe Z (Thk. Cyl.)	2300.401						
Pipe A (Thk. Cyl.)	295.0272						

Pipe (Matl B)			WOL(Matl A)					
OD	[redacted]		-			Case 1	β < π - γ	Crack Above Neutral Axis
t	3.011	in	t overlay	0.52869	in	Case 2	β = π - γ	Crack To Neutral Axis or Crack Below Takes Compression
Sflow	52.2	ksi	Sflow	69.9	ksi	Case 3	β > π - γ	Crack Below Neutral Axis and Takes no Compression
Phib,t	1	-	Phia,t	1	-		γ = half angle up to neutral axis	
Phib,c	1	-	Phia,c	1	-		Note that any weld overlay angle α must be above neutral axis	
							and have a half angle < pipe crack half angle	

Nominal Stresses (Thin Shell Solution)					
Axial Pr	6.403 ksi		Weld Ovrlay Z Factor	1	Macros
Axial Ld	0.000 ksi		Base Metal Z Factor	1.69	<cntl>shift A — Size Case 1 Overlay
Total Axial Stress	6.403 ksi	Pm	SFm	2.77	<cntl>shift B — Size Case 2 Overlay
Prim. Bend. Stress	4.497 ksi	Pb	SFb	2.77	<cntl>shift C — Size Case 3 Overlay
Therm Bend. Stress	6.312 ksi	Pe			

For OL Z = 1, Pb,prim = [P'b + (SFb/SFm)Pm - Z M* Pe] / [SFb(1+M* (Z-1))] - Pm

For OL Z > 1, Pb,prim = [P'b + (SFb/SFm)Pm]/[SFb{Zol(1-M*)+Zbm(M*)}] - Pm - Pe/SFb

Case	γ, degrees	γ+β check	Limit Mom in-lb	Limit Str. P'b, ksi	M*	Pb,prim		Pb' WolZ = 1	Pb' WolZ > 1
1 β < π - γ	31.28	INVALID	102537.4	44.574	0.304	7.845831	Run Case 1 for These Results if F26 = VALID	7.846	6.534
2 β = π - γ	39.72	VALID	91385.0	39.726	0.506	4.496487	Results are for Case 2	4.496	3.662
3 β > π - γ	74.49	VALID	85306.5	37.083	0.506	3.789394	Run Case 3 for These Results if F28 = VALID	3.789	2.955

Current Results are for Case 2 — Weld Overlay Thickness = .5287 inch

A.8 LOCATION 1: NOZZLE AT SSW INTERFACE FOR FAULTED LOADING CONDITIONS

Spreadsheet entitled "Davis_Besse_Discharge_Nozzle.xls"

Weld Overlay Sizing Based on Load Input (Version 1 - 5June08) ---- INPUT is Lt. Green ----------

Pressure,	2255	psi	Crack			Crack Pressure Fraction		Notes:	Phi Factors are reduction factors that may be applied to flow stress in each regic
Faxial	0	kips	α,OL+Lig	0	degrees - half angle	Pipe Ligt	0		Crack face pressure fractions are portion of c
M, prim.	36816.33	in-kips	β,pipe	180	degrees - half angle	Pipe Crk	0	Stresses Using Piping Equations (Info)	
M, therm	14519.09	in-kips	a/t, pipe	0.75	a/t	WOL Crk	0	Axial Pressure =	6.403 ksi
								Axial Load =	0.000 ksi
Fpress	2071.518	kips						Primary Bending =	16.004 ksi
								Thermal Bending =	6.312 ksi

Pipe Metal Area =	295.0272						
Pipe Z (shell) =	2300.401						
Shell Theory Z	2300.401						
Shell Theory A	295.0272						
Pipe Z (Thk. Cyl.)	2300.401						
Pipe A (Thk. Cyl.)	295.0272						

Pipe (Matl B)			WOL(Matl A)			Case 1	β < π - γ	Crack Above Neutral Axis
OD	[redacted]		-			Case 2	β = π - γ	Crack To Neutral Axis or Crack Below Takes Compression
t	3.011	in	t overlay	0.549181	in	Case 3	β > π - γ	Crack Below Neutral Axis and Takes no Compression
Sflow	52.2	ksi	Sflow	69.9	ksi		γ = half angle up to neutral axis	
Phib,t	1	-	Phia,t	1	-		Note that any weld overlay angle α must be above neutral axis	
Phib,c	1	-	Phia,c	1	-		and have a half angle < pipe crack half angle	

Nominal Stresses (Thin Shell Solution)			Weld Ovrlay Z Factor	1	Macros	
Axial Pr	6.403	ksi	Base Metal Z Factor	1.69	<cntl>shift A	Size Case 1 Overlay
Axial Ld	0.000	ksi	SFm	1.39	<cntl>shift B	Size Case 2 Overlay
Total Axial Stress	6.403	ksi Pm	SFb	1.39	<cntl>shift C	Size Case 3 Overlay
Prim. Bend. Stress	16.004	ksi Pb				
Therm Bend. Stress	6.312	ksi Pe				

For OL Z = 1, Pb,prim = [P'b + (SFb/SFm)Pm - Z M* Pe] / [SFb(1+M* (Z-1))] - Pm

For OL Z > 1, Pb,prim = [P'b + (SFb/SFm)Pm]/[SFb{Zol(1-M*)+Zbm(M*)}] - Pm - Pe/SFb

Case	γ, degrees	γ+β check	Limit Mom in-lb	Limit Str. P'b, ksi	M*	Pb,prim		Pb' WolZ = 1	Pb' WolZ > 1
1 β < π - γ	31.76	INVALID	104873.2	45.589	0.290	22.90374	Run Case 1 for These Results if F26 = VALID	22.904	20.219
2 β = π - γ	40.29	VALID	93630.9	40.702	0.496	16.00399	Results are for Case 2	16.004	14.300
3 β > π - γ	74.79	VALID	87147.3	37.884	0.496	14.49355	Run Case 3 for These Results if F28 = VALID	14.494	12.790

Current Results are for Case 2 Weld Overlay Thickness = .5492 inch

A.9 OUTER DIAMETER CALCULATIONS FOR THE NOZZLE

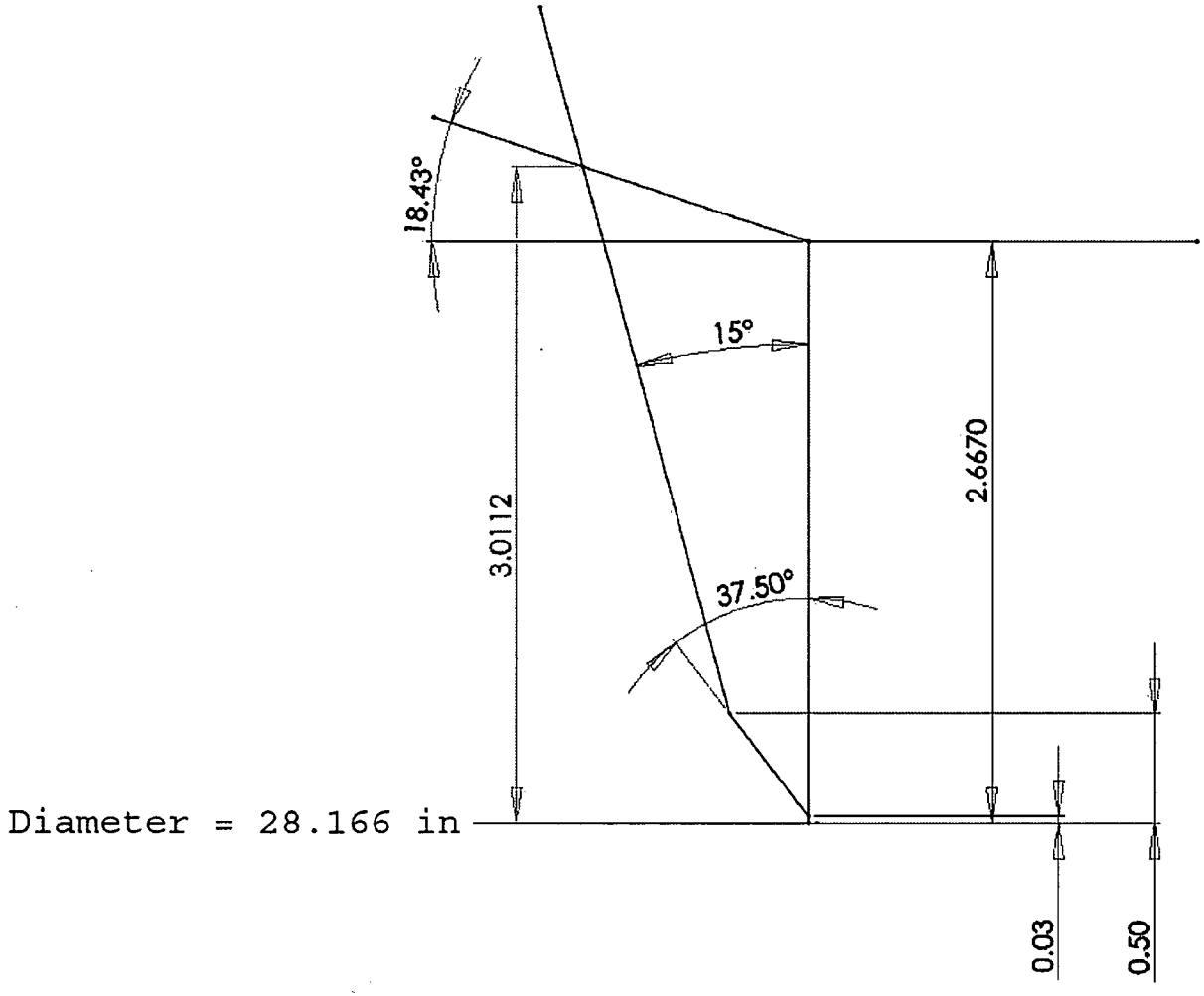

A.10 OUTER DIAMETER CALCULATIONS FOR THE ELBOW

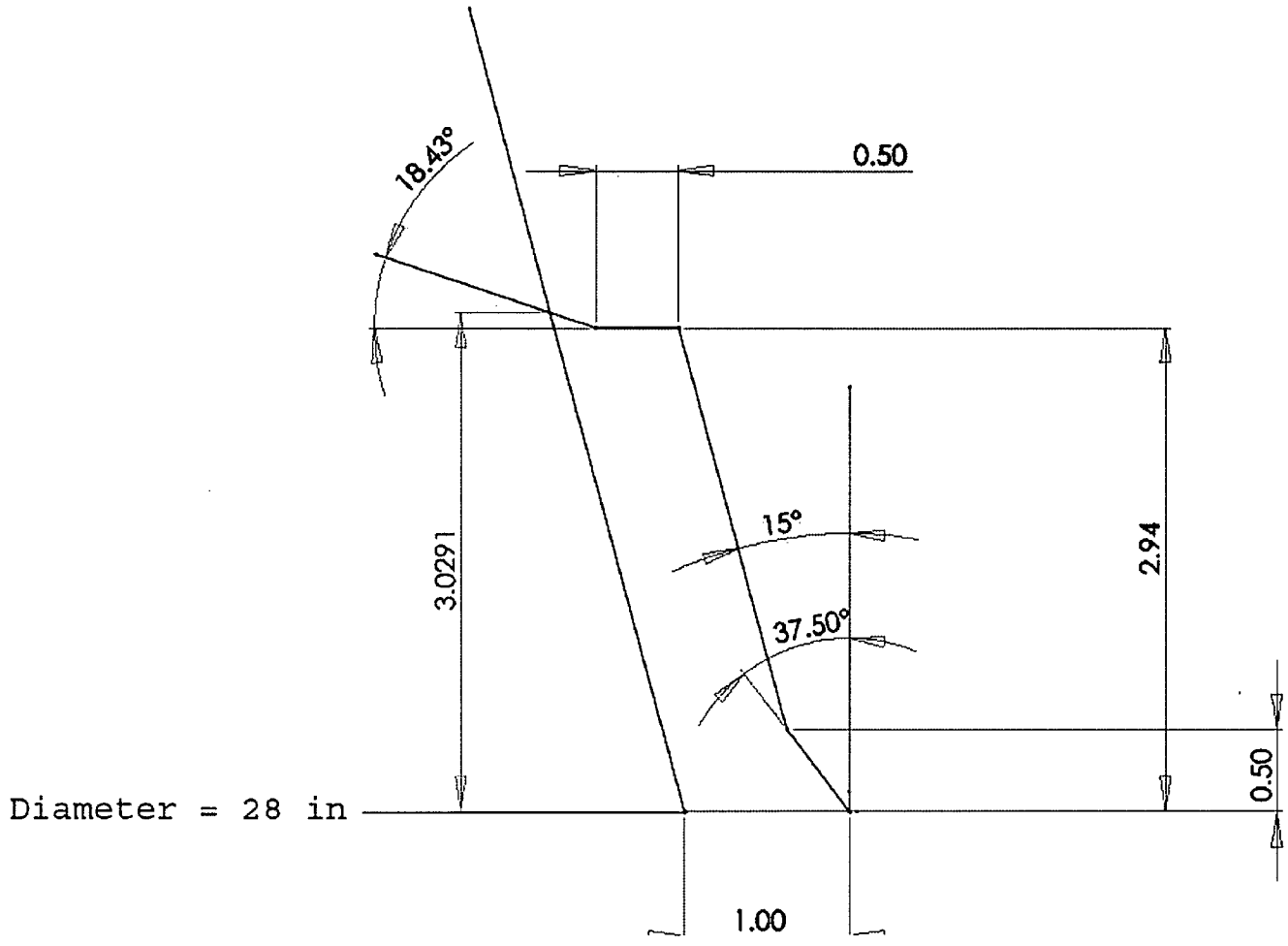

Appendix B

WELD OVERLAY SIZING METHODOLOGY (13 PAGES)

Table of Contents

List of Figures

B.1 INTRODUCTION/OBJECTIVE

For a weld overlaid piping geometry, the weld overlay material and the base metal material may have different material strength and toughness. Since the weld overlay is installed at a slightly larger diameter than the base metal, it has more area per unit circumference and thickness than the base metal. The concept of the two-material overlay was described in a 2006 Pressure Vessel and Piping Conference paper [B1]. Figure B1 shows the geometry to be evaluated.

The objective of this calculation is to develop a spreadsheet that may be used to size weld overlays using the two-material concept. The spreadsheet can then be used for plant-specific weld overlay design applications.

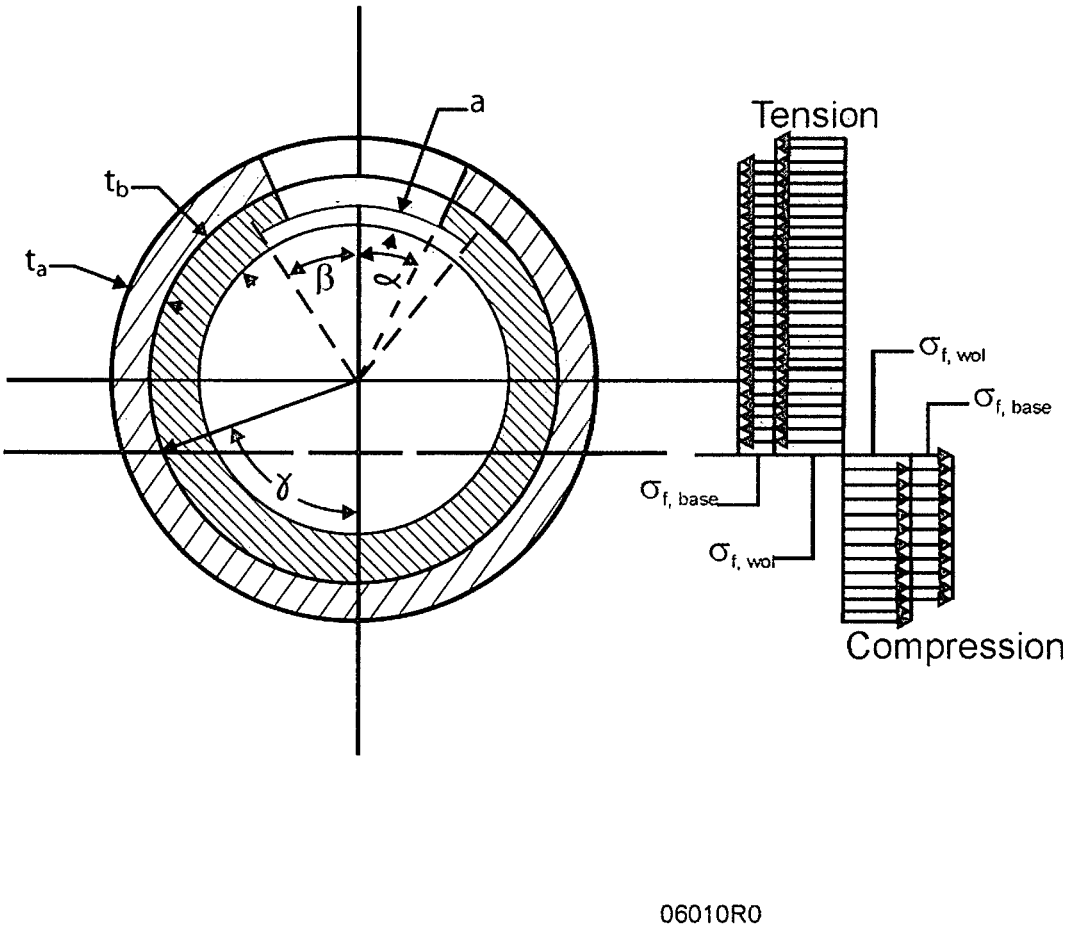

Figure B1 Definition of Cracked Section

B.2 TECHNICAL APPROACH

Appendix C of Section XI of the ASME Code [B2] has a method for evaluating flawed piping using net section collapse limit load methods. The methodology is based on a single material thin cylinder and can be used to determine the critical through-wall flaw size for an overlaid pipe. A modified approach is developed herein based on similar limit load methods, but has some additional considerations:

1. The effect of having two separate materials is considered. Whereas the piping forces/moments in the original piping analysis are based on the un-overlaid pipe geometry, the weld overlay material, at a slightly larger radius, provides more material per unit circumference and thickness for resisting applied loads.
2. The model is developed for a partial thickness (to full thickness) crack in the base (pipe or weld) material, and will also consider a through-wall crack in the weld overlay and underlying pipe ligament to facilitate evaluation of through-wall flaws. The latter feature for considering a through-wall flaw is an extension from previous work that considered critical flaw sizing for a leak-before-break analysis.
3. The evaluation method allows a reduction in the strength of the base material to be considered, since this material may not have the toughness as the overlay material. The strength reduction factor may be separately applied to the material in tension and that in compression, with the idea that ductile tearing might not be possible for the material in compression.
4. Pressure may be applied on the crack face. The pressure produces an additional axial force and bending moment at the section. An applied pressure reduction factor is defined separately for both the base material crack and the overlay crack, allowing consideration of pressure drop across the crack for through-wall flaws. The consideration of the crack face pressure allows the pressure force membrane stresses for evaluation to be based on the insider diameter of the piping, not using the standard ASME Section III Code equation based on the section outside diameter.
5. The model allows for the arbitrary definition of the crack length for the weld overlay and for the base material. The length of the base metal crack can be any length. The region below the neutral axis can be evaluated with or without the ability to take crack face compression. (If compression is not assumed, then applied crack pressure will also act on the crack face. If the crack can take compression, then pressure is not assumed to act coincidentally.)
6. The safety factors of ASME Section XI may be included in determining the relationship between the actual applied loads and the limit load state.
7. The low toughness for the weld overlay material and the base material may be incorporated considering the inclusion of thermal stresses in the allowable stress equations by inputting Z factors for the weld overlay and base material that are greater than 1.0.

B2.1 Definitions

For purposes of defining parameters, the weld overlay is considered to be material A and the base material (original pipe or weld – also the material remote from the overlay) is considered to be material B. The following nomenclature is used in the equations for net section collapse:

α	=	half through-wall (TW) crack angle in weld overlay and underlying base material ligament
β	=	half part-wall crack angle in original pipe or weld (can be different than weld overlay) (like θ in ASME Section XI, Appendix C evaluation methods) – must be greater than or equal to the angle α
γ	=	angle to neutral compression/tension axis from opposite side of the pipe (like β in ASME Section XI, Appendix C)
Ψ	=	angle to neutral compression/tension axis from top of the pipe at crack center
	=	$\pi - \gamma$
r_a	=	mean radius of weld overlay
r_b	=	mean radius of original pipe
r_{bc}	=	mean radius of crack in original pipe
r_{bm}	=	mean radius of base material remaining over crack
r_i	=	inside radius of original pipe
r	=	radius in a general sense
t_a	=	thickness of weld overlay
t_b	=	thickness of original pipe
a	=	crack depth in original pipe
t_{bm}	=	thickness of base material remaining over crack = $t_b - a$
t	=	thickness in a general sense
σ_{fa}	=	flow stress of weld overlay
σ_{fb}	=	flow stress of original pipe
σ	=	stress in a general sense
Φ_{ta}, Φ_{tb}	=	factor to be applied to flow stress of weld overlay or original piping material for the tensile region to account for reduced toughness and consideration of thermal stresses
Φ_{ca}, Φ_{cb}	=	factor to be applied to flow stress of weld overlay or original piping material for the compressive region
X_a	=	factor to multiply the pressure on the crack face for the weld overlay
X_b	=	factor to multiply the pressure on the crack face for the base material crack
X_H	=	factor to multiply the pressure on ligament crack adjacent to overlay crack
P_m	=	axial stress in original pipe remote from weld due to pressure and axial load $= [P \times \pi r_i^2 + F]/(2\pi r_b t)$
P	=	pipe pressure (with same units as stress)
F	=	axial pipe load
P'_b	=	limit bending moment stress for the unflawed original pipe (corresponding moment is $M' = P'_b \times (\pi r_b^2 t_b)$)
P_b	=	piping primary bending stress
P_e	=	piping thermal expansion stress
Z	=	Z-factor defined by ASME Section XI Appendix C

SF_m = Safety factor defined by ASME Section XI Appendix C for membrane stresses
SF_b = Safety factor defined by ASME Section XI Appendix C for bending stresses

Note that some additional terms are defined where used.

B2.2 Force and Moment Integration

For any section of the piping, the axial force integration is:

$$F_{axial} = \int_{\theta_1}^{\theta_2} \sigma r t \, d\theta = \sigma r t(\theta_2 - \theta_1)$$

The moment integration is:

$$M = \int_{\theta_1}^{\theta_2} \sigma r^2 t \cos\theta \, d\theta = \sigma r^2 t(\sin\theta_2 - \sin\theta_1)$$

Although stress is used in the above equations, the stress term may be either the stress acting in the material or the pressure acting on a crack face.

B2.3 Evaluation of Forces, Moments and Neutral Axis

The most simple case is that of crack angles in the original pipe/base material/weld (β) and WOL (α) that are less than the angle to the neutral axis (γ from bottom of pipe). Note that in the following equations, all forces and moments are computed for ½ of the pipe section for an angle between 0 and π, where the angles are measured from the top of the pipe as shown in Figure B1. Due to symmetry, the total forces and moments would be twice those computed for the ½ pipe used in the analysis for a symmetrically cracked section.

R = remote force = $F_p + F_a$

F_p = remote force due to pressure (divided by 2)

F_a = remote axial force (divided by 2)

P = pressure

$F_p = \frac{P}{2}\frac{\pi r_o^2}{}$, based on the original pipe remote from the weld overlay

There are also axial forces on the cracks due to crack face pressure.

$F_{CFP} = f_a \alpha + f_b \beta$

where

$f_a = q_a' \, r_a \, t_a$

q_a' = crack face pressure = $X_a P$

X_a = crack face pressure knockdown factor for WOL

f_b = q'_b r_{bc} a

q'_b = X_b P

X_b = crack face pressure knockdown factor for base material

Similar equations can be derived for the moment due to crack face pressure.

For limit load conditions, the axial force equations are used with the stresses at tensile flow stress above the neutral (tension/compression transition) axis and with stresses at compressive yield below the neutral axis.

B2.3.1 Case 1 - Cracking Above Neutral Axis

First, the problem will be solved for the case where the region below the neutral axis is uncracked. The following breaks the pipe up into a number of different areas. In each region, there will be a force equal to the area times the stress (or applied pressure). The forces due to tensile stress at the crack location will be taken as positive and equated to the remotely applied forces. The location of the neutral axis can be found such that sum of the forces on the half pipe section is equal to the sum of the remote forces (divided by two) as determined above. The angle from the top of the pipe to the neutral axis will be defined as ψ ($= \pi - \gamma$). Specific regions can be defined and evaluated as follows:

- Region A: Weld overlay above the neutral axis
  - Force = G_A (ψ -α), where $G_A = \sigma_{fa}\ \Phi_{ta}\ r_a\ t_a$
  - Moment = G'_A (sin ψ -sin α) where $G'_A = \sigma_{fa}\ \Phi_{ta}\ r_a^2\ t_a$

- Region B: Pipe above the neutral axis beyond the crack angle
  - Force = G_B (ψ -β), where $G_B = \sigma_{fb}\ \Phi_{tb}\ r_b\ t_b$
  - Moment = G'_B (sin ψ -sin β) where $G'_B = \sigma_{fb}\ \Phi_{tb}\ r_b^2\ t_b$

- Region C: Ligament over the crack in pipe
  - Force = G_C (β-α), where $G_C = \sigma_{fb}\ \Phi_{tb}\ r_{bm}\ t_{bm}$
  - Moment = G'_C (sin β-sin α) where $G'_C = \sigma_{fb}\ \Phi_{tb}\ r_{bm}^2\ t_{bm}$

- Region D: Area of pipe that is cracked
  - Force = G_D (β), where G_D = - P X_b r_{bc} a
  - Moment = G'_D (sinβ) where G'_D = - P X_b r_{bc}^2 a

- Region E: Weld overlay below the neutral axis
  - Force = $G_E (\pi - \psi)$, where $G_E = - \sigma_{fa} \Phi_{ca} r_a t_a$
  - Moment = $G'_E (-\sin \psi)$ where $G'_E = - \sigma_{fa} \Phi_{ca} r_a^2 t_a$

- Region F: Uncracked pipe below the neutral axis
  - Force = $G_F (\pi - \psi)$, where $G_F = - \sigma_{fb} \Phi_{cb} r_b t_b$
  - Moment = $G'_F (-\sin \psi)$ where $G'_F = - \sigma_{fb} \Phi_{cb} r_b^2 t_b$

- Region G: Cracked region in the weld overlay above the neutral axis (assumed through-wall)
  - Force = $G_G (\alpha)$, where $G_a = -P X_a r_a t_a$
  - Moment = $G'_G (\sin \alpha)$ where $G'_A = -P X_a r_a^2 t_a$

- Region H: Through-wall crack in ligament over the larger crack in the base material
  - Force = $G_H (\beta-\alpha)$, where $G_H = -P X_H r_{bm} t_{bm}$
  - Moment = $G'_H (\sin \beta-\sin \alpha)$ where $G'_H = -P X_H r_{bm}^2 t_{bm}$

$$R = G_A (\psi -\alpha) + G_B (\psi -\beta) + G_C (\beta - \alpha) + G_D (\beta) + G_E (\pi - \psi) + G_F (\pi - \psi) + G_G (\alpha) + G_H(\alpha)$$

$$= (G_A + G_B - G_E - G_F) \psi + \{- G_A \alpha - G_B \beta + G_C (\beta- \alpha) + G_D \beta + G_E \pi + G_F \pi + G_G \alpha + G_H \alpha\}$$

or

$$\psi = [R - \{- G_A \alpha - G_B \beta + G_C (\beta - \alpha) + G_D \beta + G_E \pi + G_F \pi + G_G \alpha + G_H \alpha\}] / (G_A+G_B-G_E-G_F)$$

The limit bending moment can be determined by integrating the force distribution with compression below the neutral axis and tension above it by summing the above equations.

$M_{r\text{-Case 1}}$ = remote applied moment (on ½ of pipe) at limit load

$$= G'_A (\sin \psi -\sin \alpha) + G'_B (\sin \psi -\sin \beta) + G'_C (\sin \beta - \sin \alpha) + G'_D (\sin \beta) + G'_E (-\sin \psi) + G'_F (-\sin \psi) + G'_G (\sin \alpha) + G'_H (\sin \alpha)$$

B2.3.2 Case 2 - Cracking Below Neutral Axis – Crack in Compression

This solution is for the case where the crack extends either to or into the region below the neutral axis, and applies to the case where a crack extending below the neutral axis can take compression. In this case, the crack effectively stops at the neutral axis and pressure is not considered to be additive to the compression acting at the crack below the neutral axis. This case can be used for design of full structural overlays where the original pipe/weld is assumed to be cracked completely around the circumference. Specific regions can be defined and evaluated as follows:

- Region A: Weld overlay above the neutral axis (same as above)
  - Force = $G_A (\psi - \alpha)$, where $G_A = \sigma_{fa} \Phi_{ta} r_a t_a$
  - Moment = $G'_A (\sin \psi - \sin \alpha)$ where $G'_A = \sigma_{fa} \Phi_{ta} r_a^2 t_a$

- Region B: Pipe above the neutral axis beyond the crack angle (does not exist so force and moment are zero
  - Force = 0
  - Moment = 0

- Region C: Ligament over the crack in pipe
  - Force = $G_C (\psi - \alpha)$, where $G_C = \sigma_{fb} \Phi_{tb} r_{bm} t_{bm}$
  - Moment = $G'_C (\sin \psi - \sin \alpha)$ where $G'_C = \sigma_{fb} \Phi_{tb} r_{bm}^2 t_{bm}$

- Region D: Area of pipe that is cracked
  - Force = $G_D (\psi)$, where $G_D = - P X_b r_{bc} a$
  - Moment = $G'_D (\sin\psi)$ where $G'_D = - P X_b r_{bc}^2 a$

- Region E: Weld overlay below the neutral axis (same as above)
  - Force = $G_E (\pi - \psi)$, where $G_E = - \sigma_{fa} \Phi_{ca} r_a t_a$
  - Moment = $G'_E (-\sin \psi)$ where $G'_E = - \sigma_{fa} \Phi_{ca} r_a^2 t_a$

- Region F: Uncracked pipe (or crack taking compression) below the neutral axis (same as above)
  - Force = $G_F (\pi - \psi)$, where $G_F = - \sigma_{fb} \Phi_{cb} r_b t_b$
  - Moment = $G'_F (-\sin \psi)$ where $G'_B = - \sigma_{fb} \Phi_{cb} r_b^2 t_b$

- Region G: Cracked region in the weld overlay always assumed to be above the neutral axis (assumed through-wall – same as the previous case)
  - Force = $G_G (\alpha)$, where $G_a = -P X_a r_a t_a$
  - Moment = $G'_G (\sin \alpha)$ where $G'_A = -P X_a r_a^2 t_a$

- Region H: Through-wall crack in ligament over the larger crack in the base material
  - Force = $G_H (\beta - \alpha)$, where $G_H = -P X_H r_{bm} t_{bm}$
  - Moment = $G'_H (\sin \beta - \sin \alpha)$ where $G'_H = -P X_H r_{bm}^2 t_{bm}$

$$R = G_A (\psi - \alpha) + G_B (0) + G_C (\psi - \alpha) + G_D (\psi) + G_E (\pi - \psi) + G_F (\pi - \psi) + G_G (\alpha) + G_H(\alpha)$$

$$= (G_A + G_C + G_D - G_E - G_F)\,\psi + (-G_A\,\alpha - G_C\,\alpha + G_E\,\pi + G_F\,\pi + G_G\,\alpha + G_H\,\alpha)$$

or

$$\psi = [R - (-G_A\,\alpha - G_C\,\alpha + G_E\,\pi + G_F\,\pi + G_G\,\alpha + G_H\,\alpha)] / (G_A + G_C + G_D - G_E - G_F)$$

The limit bending moment can be determined by integrating the force distribution with compression below the neutral axis and tension above it by summing the above equations.

$M_{r\text{-Case 2}}$ = remote applied moment (on whole pipe) at limit load

$$= G'_A(\sin\psi - \sin\alpha) + G'_C(\sin\psi - \sin\alpha) + G'_D \sin\psi + G'_E(-\sin\psi) + G'_F(-\sin\psi) + G'_G(\sin\alpha) + G'_H(\sin\alpha)$$

B2.3.3 Case 3 – Crack Below Neutral Axis – No Crack Compression

This solution applies to the case where the crack extends below the neutral axis and the crack face is not capable of taking compression. This is not the approach taken in ASME Section XI Appendix C, where the equations were derived assuming that the material below the neutral axis would close such that the crack face could take compression. In this case, the crack is assumed to be loaded with pressure since crack closure is not assumed. Specific regions can be defined and evaluated as follows:

- Region A: Weld overlay above the neutral axis (identical to above)
  - Force = $G_A(\psi - \alpha)$, where $G_A = \sigma_{fa}\,\Phi_{ta}\,r_a\,t_a$
  - Moment = $G'_A(\sin\psi - \sin\alpha)$ where $G'_A = \sigma_{fa}\,\Phi_{ta}\,r_a^2\,t_a$

- Redefined Region B: Pipe ligament below the neutral axis to the crack angle
  - Force = $G_B(\beta - \psi)$, where $G_B = -\sigma_{fb}\,\Phi_{cb}\,r_{bm}\,t_{bm}$
  - Moment = $G'_B(\sin\psi - \sin\beta)$ where $G'_B = -\sigma_{fb}\,\Phi_{cb}\,r_{bm}^2\,t_{bm}$

- Region C: Ligament over the crack in pipe above the neutral axis
  - Force = $G_C(\psi - \alpha)$, where $G_C = \sigma_{fb}\,\Phi_{tb}\,r_{bm}\,t_{bm}$
  - Moment = $G'_C(\sin\psi - \sin\alpha)$ where $G'_C = \sigma_{fb}\,\Phi_{tb}\,r_{bm}^2\,t_{bm}$

- Region D: Area of pipe that is cracked
  - Force = $G_D(\beta)$, where $G_D = -P\,X_b\,r_{bc}\,a$
  - Moment = $G'_D(\sin\beta)$ where $G'_D = -P\,X_b\,r_{bc}^2\,a$

- Redefined Region E: Weld overlay below the neutral axis
  - Force = $G_E(\pi - \psi)$, where $G_E = -\sigma_{fa}\,\Phi_{ca}\,r_a\,t_a$
  - Moment = $G'_E(-\sin\psi)$ where $G'_E = -\sigma_{fa}\,\Phi_{ca}\,r_a^2\,t_a$

- Redefined Region F: Uncracked pipe beyond crack tip
  - Force = G_F (π - β), where $G_F = - \sigma_{fb} \Phi_{cb} r_b t_b$
  - Moment = G'_F (-sin β) where $G'_B = - \sigma_{fb} \Phi_{cb} r_b^2 t_b$

- Region G: Cracked region in the weld overlay above the neutral axis (assumed through-wall)
  - Force = G_G (α), where $G_a = -P X_a r_a t_a$
  - Moment = G'_G (sin α) where $G'_A = -P X_a r_a^2 t_a$

- Region H: Through-wall crack in ligament over the larger crack in the base material
  - Force = G_H (β-α), where $G_H = -P X_H r_{bm} t_{bm}$
  - Moment = G'_H (sin β-sin α) where $G'_H = -P X_H r_{bm}^2 t_{bm}$

$$R = G_A (\psi - \alpha) + G_B (\beta - \psi) + G_C (\psi - \alpha) + G_D (\beta) + G_E (\pi - \psi) + G_F (\pi - \beta) + G_G (\alpha) + G_H (\alpha)$$

$$= (G_A - G_B + G_C - G_E) \psi + \{- G_A \alpha - G_C (\alpha) + G_B \beta + G_D \beta + G_E \pi + G_F (\pi - \beta) + G_G \alpha + G_H \alpha\}$$

or

$$\psi = [R - \{- G_A \alpha - G_C \alpha + G_B \beta + G_D \beta + G_E \pi + G_F (\pi - \beta) + G_G \alpha + G_H \alpha \}] / (G_A - G_B + G_C - G_E)$$

The limit bending moment can be determined by integrating the force distribution with compression below the neutral axis and tension above it by summing the above equations.

$M_{r\text{-Case 3}}$ = remote applied moment (on whole pipe) at limit load

$$= G'_A (\sin \psi - \sin \alpha) + G'_B (\sin \psi - \sin \beta) + G'_C (\sin \psi - \sin \alpha) + G'_D \sin \beta + G'_E (-\sin \psi) + G'_F (-\sin \beta) + G'_G (\sin \alpha) + G'_H (\sin \alpha)$$

B2.4 Determination of Limit Stresses

The limit stress, representing the thin-shell approximation stress in the uncracked pipe, can be computed from

$$P'_b = \frac{M_r}{\pi r^2_b t_b}$$

The remote limit bending stress based on piping equations could be calculated using the ASME Code formula for bending stress in a pipe. This would represent the extreme fiber stress in the pipe section:

$$P'_b = \frac{M_r}{Z}$$

where:

M_r = remote applied load on the pipe (entire cross section) at limit load
Z = section modulus of the piping.

If the input to a problem is the stresses based on piping equations, then this same equation can be re-written to compute the applied moment given the stress.

The overlay material is generally a very high toughness material such that the thermal expansion stresses would not have to be considered in determining critical flaw size. The underlying material may have low toughness. The PVP paper [1] describes how net section plastic collapse analysis may be conducted for a two layer configuration with both low toughness and high toughness materials.

$$P_b = [P'_b + (SF_b/SF_m)\, Pm - ZM^* P_e] / \{SF_b[1 + M^*(Z-1)]\} - P_m$$

where:

P_b = primary bending stress
P_m = primary membrane stress
P_e = thermal expansion bending stress
Z = Z-factor for correcting for low toughness material
M^* = ratio of tension region material moment due to base material divided by the total moment for tensile material (See discussion below for redefinition.)
SF_b = Bending Safety Factor for Service Level
SF_m = Membrane Safety Factor for Service Level

With this approach, if it is assumed that the entire base material is cracked above the neutral axis (such as one would do with a full structural overlay), then $M^* = 0$ and the equation collapses back to the form for high toughness material. If it is assumed that there is no overlay material, then M* = 1.0, and the equation becomes that for a low-toughness material where the complete effects of the thermal expansion moment must be included in the evaluation. This is a convenient method for "interpolating" to determine the contribution of thermal expansion stress that should be considered of the overlaid section.

Experience with applying the approach defined herein showed that determination of the M* ratio using the moment contributions was somewhat unstable for some configurations. The portion of the tensile region that is below the pipe centerline contributes a moment with a negative sign. If the moment contribution below the pipe centerline becomes larger than that from above, the sign of the moment is negative. In this case, the ratio for M* above becomes highly unstable when the moment nears zero. As an alternative, M* is re-defined based on the ratio of the tensile loads.

$$M^* \text{ (modified)} = \frac{\text{Tensile load due to base material in tensile region (above neutral axis)}}{\text{Total tensile load for tensile region (above neutral axis)}}$$

Application of this modified ratio showed that it was not much different than the ratio based on the tensile moment, when there was a net positive moment in both the base material and weld overlay material. Thus,

this modified definition will be use for combining the solutions for high-toughness and low-toughness materials.

A similar equation can be derived if one must assume that the weld overlay is not a high toughness material and must have a Z-factor applied. In this case, the complete unfactored thermal expansion moment must be considered in determining the allowable bending stress. The resulting equation is

$$P_b = [P'_b + (SF_b/SF_m)\, P_m] / \{SF_b[Z_a (1 - M^*) + Z_b M^*]\} - P_m - P_e/SF_b$$

where:

Z_a = Z-factor for the weld overlay
Z_b = Z-factor for the original pipe/weld material

These equations also yield the correct solutions for the no-overlay and no-base material cases described above.

B.3 ASSUMPTIONS / DESIGN INPUTS

There are none. This methodology is a methods development evaluation only. Typical properties are used.

B.4 SPREADSHEET DEVELOPMENT

Two spreadsheets are developed. One allows input of the basic loads as pressure, axial force, and moments. The second allows input of stresses calculated using the standard equations for piping analysis [B3].

B.5 CONCLUSIONS AND DISCUSSIONS

The spreadsheets developed allow for rapid solution of weld overlay thickness using shell equations for net section collapse.

The spreadsheets allow for a technique of analysis that is really not needed, namely the application of separate stress reduction factors for the tensile and compressive regions. The thought behind these stress reduction factors was that low toughness materials could not tear in compression. Thus, instead of using Z-factors that apply a common knockdown factor to both the tensile and compressive regions, a separate factor could be applied to just the tensile region such the results of EPFM J-T analysis could be calibrated with a stress reduction factor instead of a Z-factor. Since this technique has not received ASME Code Committee or regulatory review, it is recommended that these factors be kept as 1.0 and the Z-factor approach be used.

B.6 REFERENCES

B1. Deardorff, A, et.al., "Net Section Plastic Collapse Analysis of Two-Layered Materials and Application to Weld Overlay Design," PVP2006-ICPVT11-93454, ASME PVP Conference 2006, SI File No. MILL-11Q-207.

B2. ASME Boiler and Pressure Vessel Code, Section XI, Rules for Inservice Inspection of Nuclear Power Plant Components (various Editions and Addenda).

B3. ASME Boiler and Pressure Vessel Code, Section III, Subsection NB – Class 1 Components (various Editions and Addenda).