FENOC
FirstEnergy Nuclear Operating Company

5501 North State Route 2
Oak Harbor, Ohio 43449

Barry S. Allen
Vice President - Nuclear

419-321-7676
Fax: 419-321-7582

Withhold from Public Disclosure Under 10 CFR 2.390
When Separated from Enclosures C, D, E, and F, This Document can be Decontrolled

November 23, 2009
L-09-268

10 CFR 50.55a

ATTN: Document Control Desk
U.S. Nuclear Regulatory Commission
Washington, DC 20555-0001

SUBJECT:
Davis-Besse Nuclear Power Station
Docket No. 50-346, License No. NPF-3
Response to Requests for Additional Information Related to Alternative Dissimilar Metal Weld Repair Methods (TAC Nos. ME0477 and ME0478)

By correspondence dated January 30, 2009, FirstEnergy Nuclear Operating Company (FENOC) submitted two alternatives to requirements associated with reactor vessel nozzle, reactor coolant pump nozzle, and reactor coolant piping weld repairs for the Davis-Besse Nuclear Power Station.

By letters dated June 11 and June 15, 2009, the Nuclear Regulatory Commission (NRC) staff requested additional information on these two requests. By letter dated July 13, 2009, FENOC provided responses to these questions.

By letter dated October 8, 2009, the NRC staff requested additional information to complete its review. The attachment provides responses to the NRC staff comments and questions.

The 10 CFR 50.55a Requests RR-A32 and RR-A33 (Enclosures A and B) have been updated to include appropriate information, as discussed in the responses to the NRC comments and questions. Revision bars in the margin indicate areas of change.

Structural Integrity Associates, Inc. (SIA) calculations (Enclosures C, D, E, and F) support the responses to the NRC questions. These four calculations are considered proprietary information and should be withheld from public disclosure under 10 CFR 2.390. Enclosure G provides the SIA proprietary information affidavits. Enclosure H provides the AREVA NP proprietary information affidavits. Enclosures I, J, K, and L provide nonproprietary versions of the SIA calculations.

A047
NRR

Accordingly, it is respectfully requested that the information which is proprietary to SIA or AREVA be withheld from public disclosure in accordance with 10 CFR 2.390. Correspondence regarding the proprietary classification of Enclosures C, D, E, and F, the SIA affidavits (Enclosure G), or the AREVA affidavits (Enclosure H), should reference the specific calculation numbers and be addressed to:

Marcos Legaspi Herrera, Vice President
Structural Integrity Associates, Inc.
5215 Hellyer Avenue, Suite 210
San Jose, CA 95138

and/or

Gayle F. Elliott, Manager – Product Licensing
AREVA NP, Inc.
3315 Old Forest Road
Lynchburg, VA 24501

Enclosures M, N, O, P, Q, and R provide additional nonproprietary calculations and drawings to support the responses to the NRC's questions.

There are no new regulatory commitments contained in this submittal. Enclosures C, D, E, F, I, J, K, L, M, N, O, P, and Q satisfy FENOC Commitments 1(a), 1(b), and 1(c) contained in the January 30, 2009 submittal. Commitments 2(a), 2(b), 2(c), and 3, remain unchanged. If there are any questions or additional information is required, please contact Mr. Thomas A. Lentz, Manager – Fleet Licensing, at (330) 761-6071.

Sincerely,

Barry S. Allen

Barry S. Allen

Attachment: Response to 10/8/09 Request for Additional Information Related to Requests RR-A32 and RR-A33, Alternative Dissimilar Metal Weld Repair Methods

Enclosures:
A. 10 CFR 50.55a Request Number RR-A32, Revision 0
B. 10 CFR 50.55a Request Number RR-A33, Revision 0

C. Calculation 0800368.301, Rev. 0, "Material Properties for Davis-Besse Unit 1, RCP Suction, RCP Discharge, Cold Leg Drain and Core Flood Nozzles Preemptive Weld Overlay Repairs" [PROPRIETARY]
D. Calculation 0800368.311, Rev. 0, "Design Loads for the 28" I.D. Reactor Coolant Pump (RCP) Suction and Discharge Nozzles" [PROPRIETARY]
E. Calculation 0800368.320, Rev. 1, "Optimized Weld Overlay Sizing for the 28" I.D. Outlet/Discharge Reactor Coolant Pump Nozzle" [PROPRIETARY]
F. Calculation 0800368.322, Rev. 0, "Finite Element Models of the Reactor Coolant Pump Discharge Nozzle with Weld Overlay Repair" [PROPRIETARY]
G. Proprietary Affidavits, Structural Integrity Associates, Inc.
H. Proprietary Affidavits, AREVA NP, Inc.
I. Calculation 0800368.301, Rev. 0, "Material Properties for Davis-Besse Unit 1, RCP Suction, RCP Discharge, Cold Leg Drain and Core Flood Nozzles Preemptive Weld Overlay Repairs" [NONPROPRIETARY]
J. Calculation 0800368.311, Rev. 0, "Design Loads for the 28" I.D. Reactor Coolant Pump (RCP) Suction and Discharge Nozzles" [NONPROPRIETARY]
K. Calculation 0800368.320, Rev. 1, "Optimized Weld Overlay Sizing for the 28" I.D. Outlet/Discharge Reactor Coolant Pump Nozzle" [NONPROPRIETARY]
L. Calculation 0800368.322, Rev. 0, "Finite Element Models of the Reactor Coolant Pump Discharge Nozzle with Weld Overlay Repair" [NONPROPRIETARY]
M. Calculation 0800368.323, Rev. 0, "Thermal and Unit Mechanical Stress Analyses for Reactor Coolant Pump Discharge Nozzle with Weld Overlay Repair"
N. Calculation 0800368.324, Rev. 0, "Residual Stress Analysis of Reactor Coolant Pump Discharge Nozzle with Weld Overlay Repair"
O. Calculation 0800368.325, Rev. 0, "ASME Code, Section III Evaluation of Reactor Coolant Pump Discharge Nozzle with Weld Overlay Repair"
P. Calculation 0800368.326, Rev. 0, "Crack Growth Evaluation of Reactor Coolant Pump Discharge Nozzle with Weld Overlay Repair"
Q. Calculation 0800777.309, Rev. 0, "Sensitivity Study of Extension of Temperbead Surface Area Limitations for Weld Overlay Repairs Over Ferritic Materials (from 500 to 1,000 Square Inches)"
R. Drawing 0800368.520, Rev. 1, "RCP Discharge Nozzle Optimized (OWOL) Weld Overlay Design"

cc: NRC Region III Administrator (w/o Enclosures C through R)
NRC Resident Inspector (w/o Enclosures C through R)
NRC Project Manager (w/o Enclosures C through R)
Utility Radiological Safety Board (w/o Enclosures C through R)

By letter dated January 30, 2009, FirstEnergy Nuclear Operating Company (FENOC) submitted for Nuclear Regulatory Commission (NRC) staff review and approval Requests RR-A32 and RR-A33 to install optimized weld overlays (OWOL) or full structural weld overlays (FSWOL) on Alloy 82/182 dissimilar metal welds (DMWs) at reactor coolant pump nozzles, core flood nozzles, and cold leg drain nozzles at the Davis-Besse Nuclear Power Station (DBNPS).

By letter dated July 13, 2009, FENOC responded to NRC staff requests for additional information (RAIs) and revised the requests accordingly. By letter dated October 8, 2009, the NRC staff requested the following clarifications on several of the responses. The NRC staff also provided comments on the submittal. The NRC staff comments and questions are presented in bold type, followed by the FENOC response.

Questions and Comments Related to Relief Request RR-A32 (the OWOL design)

1. Your Response to Question 1.2.b(1), (2) and (3) states that if the pre-installation examination detects an embedded (i.e., subsurface) flaw and the flaw is accepted by the American Society of Mechanical Engineers (ASME) Code, Section XI, IWA-3300 and/or IWB-3640, an OWOL will be applied. If the flaw is judged to be unacceptable, a FSWOL will be applied.

It appears that RR-A32 may be used to repair embedded flaws even though RR-A32 provides requirements only for inside-surface-connected flaws. The Nuclear Regulatory Commission (NRC) staff notes that IWB-3640 allows a maximum flaw (surface connected or subsurface) of 75 percent flaw to remain in the DMW. This implies that the OWOL may be applied to a DMW that may contain an embedded flaw of 75 percent through-wall. The NRC staff does not agree that an embedded flaw of 75 percent through-wall in the DMW can be repaired by the OWOL. The NRC staff's position is that any embedded flaw whose depth is greater than 50 percent through-wall should be repaired by the FSWOL. Any embedded flaw whose depth is equal to or less than 50 percent through-wall may be repaired by the OWOL. If any part of an embedded flaw is located in the outer 25 percent of the DMW wall thickness, the OWOL cannot be used to repair the DMW. The outer 25 percent wall thickness should be free of flaws because it provides structural support to the OWOL. Discuss if this is the same position that would be used for the repair of embedded flaws per RR-A32.

Response:

If a flaw (embedded or inside-surface-connected) is identified during an inspection, it would be characterized per ASME IWA-3300 and evaluated per the acceptance standards of ASME IWB-3500.

The following considerations will be applied to determine if an optimized weld overlay may be applied or if a full structural weld overlay must be utilized:

- Axial or circumferential flaws located entirely within the inner 50 percent of the original dissimilar metal weld wall thickness may be repaired with an OWOL.

- Axial flaws that do not extend into the outer 25 percent will be evaluated for repair with an OWOL.

- Axial flaws that extend into the outer 25 percent of the original dissimilar metal weld wall thickness must be repaired with an FSWOL. For such flaws, the evaluation procedures of ASME IWB-3640 will not be applied.

- Circumferential flaws that extend into the outer 50 percent of the original dissimilar metal wall thickness must be repaired with an FSWOL. For such flaws, the evaluation procedures of ASME IWB-3640 will not be applied.

Request RR-A32 has been updated to address how both embedded and inside-surface-connected flaws would be addressed, including clarification on how IWA-3300 and IWB-3640 are applied..

2. Your Response to 1.8c. The revised Section A2.2(2) states that "...For repair [of] axial flaws in the underlying base material or weld, the flaws shall be assumed to be 75 percent through the original wall thickness of the item for the entire axial length of the flaw or combined flaws, as applicable..." However, due to limitation on the ultrasonic test (UT) of axial flaws in the DMW, Section A2.2 also states that "A design requirement is added to show that ASME Code Section XI design criteria are met for a 100 percent through-wall axial flaw..." In response to Question 1.8a, you confirmed that the OWOL design assumes that an inside surface connected axial flaw in the DMW is 100 percent through-wall. Explain why Section A2.2(2) still discusses a 75 percent through-wall axial flaw in the DMW even though in other parts of A2.2, a 100 percent through-wall flaw was assumed.

Response:

The additional design requirement specified by FENOC to address axial flaw ultrasonic testing limitations assumes a 100 percent through-wall flaw as the design basis axial flaw (i.e., the optimized weld overlay must meet ASME Section XI, Appendix C required structural factor (safety margin) requirements in the presence of such a flaw). The post-OWOL preservice and inservice ultrasonic inspection procedure is Performance Demonstration Initiative (PDI) qualified to detect and size axial flaws in the outer 25 percent of the original component wall through the weld overlay. For conservatism, a 75 percent through-wall flaw is assumed as the initial axial flaw size for crack growth evaluations that demonstrate such an initial flaw will not grow to reach the overlay design basis (i.e., grow to 100 percent through-wall) during the design life of the optimized weld overlay, or by the next scheduled inservice inspection.

In summary, for all weld overlay designs, the added 100 percent through-wall design basis axial flaw assumption allows a 25 percent buffer zone for potential crack growth, which is detectable by qualified preservice and inservice ultrasonic testing inspection procedures.

3. Your Response to 1.11a and 1.11b. In response to Question 1.11a, you stated that the subject piping may be in either water-backed or dry condition when the OWOL is installed. In response to Question 1.11b, you stated that the residual stress analysis assumed the piping was dry. (a) Describe briefly the overlay welding procedures with regard to when the pipe will be dry and when the pipe will be filled with water. (b) If the

OWOL is installed when the piping has water inside, discuss whether the residual stresses analyzed for the dry piping condition would bound the residual stresses for the water-backed pipe condition. (c) In addition to the changes in residual stresses in the pipe, the staff concerns [sic] the potential for martensite formation which would cause embrittlement during temper bead welding. Discuss how the Procedure Qualification Report considers the cooling rate of the water vs. no water in the pipe for the field installation to minimize the potential of base metal embrittlement.

Response:

For the optimized weld overlay locations (reactor coolant pump discharge nozzles), the same welding procedure is used with either water-backed or dry pipe conditions. For these locations, water-backed or dry pipe conditions are not critical inputs. Residual stress and base metal embrittlement analyses, as discussed below, have determined that the optimized weld overlays can be performed either wet or dry.

Dry, empty pipe conditions provide less heat removal (heat sink) capacity than do wet, water backed pipe conditions. The residual stress benefit produced by a weld overlay is greater in the inner portion of the component when the welding is performed while water backed. Therefore, the crack growth analysis assumes a dry, empty pipe condition since it results in a reduced (more conservative) and therefore bounding residual stress benefit. Therefore, with respect to this aspect, the optimized weld overlay can be performed either wet or dry.

With regard to base metal embrittlement and martensite formation (which is cool-down rate dependent), the dry, empty pipe condition with less heat removal (heat sink) capabilities is less limiting than the wet, water-backed pipe condition and will minimize the potential of base metal embrittlement and martensite formation due to less rapid cooling rates. However, the temper bead welding process performed under wet, water-backed conditions has been shown to be effective in addressing base metal embrittlement and martensite as presented in EPRI Report NP-7085-D, "Inconel Weld-Overlay Repair for Low-Alloy Steel Nozzle to Safe-End Joint," January 1991. Additionally, the procedure qualification and performance qualification requirements described in RR-A32, Attachment 3 are identical to ASME Code Case N-740, Appendix I. This Code Case has been the basis for numerous temper bead weld overlay applications. Therefore, again, the optimized weld overlay can be performed either wet or dry.

4. Your Response to Q1.13b—Preservice and Inservice Examination Requirements

(a) Preservice examination Item (1) requires that UT locates and measures any planar flaws that have propagated into the outer 25 percent of the base metal. Preservice Examination Item (2) requires that the planar flaws in the outer 25 percent of the base metal satisfy the design analysis requirements of Section [A]2.2. The planar flaws in the outer 25 percent region apply only to axial flaws. In the circumferential direction, UT is qualified to locate and size the planar flaws in the outer 50 percent of the base metal. There should be two acceptance criteria for preservice examination: one for the axial planar flaws and one for the circumferential planar flaws. Explain and justify the 25 percent through-wall flaw requirement for the circumferential planar flaws in Preservice Examination Items (1) and (2).

Response:

The design basis circumferential flaw for optimized weld overlays is 75 percent through-wall, with an initial flaw size for crack growth calculations of 50 percent through-wall; the design basis axial flaw is 100 percent through-wall with an initial flaw size for crack growth calculations of 75 percent through-wall. Therefore, Request RR-A32, Attachment 2, Preservice Examination Item (1) has been updated to state that the inspections shall locate and size any axial flaws that have propagated into the outer 25 percent of the base metal thickness and any circumferential flaws that have propagated into the outer 50 percent of the base metal thickness. Similarly, Request RR-A32, Attachment 2, Preservice Examination Item (2) has been updated to state that axial flaws in the outer 25 percent of the base metal thickness or circumferential flaws in the outer 50 percent of the base metal thickness shall meet the design analysis requirements of Section A2.2.

(b) Preservice Examination Item (2) states that "...Planar flaws in the outer 25 percent of the base metal thickness shall meet the design analysis requirements of 2.2..." The reference should be Section A2.2.

Response:

FENOC concurs with the proposed change. Request RR-A32 has been updated to incorporate the proposed change "2.2" to "Section A2.2."

(c) Inservice Examination Item (2) should be revised to read "For welds whose pre-overlay examination, <u>post-overlay acceptance examination, and preservice examination</u> did not reveal any [~~inside-surface connected~~] planar flaws, the examination volume in Fig. A2-2 shall be ultrasonically examined within 10 years following application of the optimized weld overlay..." The underline and strikeout are suggested revisions to the proposed requirement. In order to not inspect the overlaid DMW during the first or second refueling outage, the DMW should not contain any planar flaws (embedded or inside-surface connected) based on pre-overlay, post-overlay and preservice examinations.

The NRC staff suggests the above revision (underline and strikeout) because of the following reasons. (1) Besides inside-surface connected flaws, no subsurface flaws should exist in the overlaid DMW in order for the DMW to be considered for a 10-year inspection frequency. A subsurface flaw may grow as a result of overlay installation and needs to be monitored. The OWOL takes credit for the outer 25 percent of the wall thickness to support the pipe loads. Therefore, the inspection of the OWOL should be more stringent than that for the FSWOL. Therefore, only a DMW without any surface or subsurface flaws is allowed to be not inspected during the first or second refueling outage after the OWOL installation. (2) After weld overlay installation, a flaw that was not detected during the pre-installation examination may occur in the overlaid DMW and may be detected by the acceptance or preservice examination. In this case, the flaw may be allowed to remain in service in the OWOL or original DMW per the requirements of acceptance and preservice examinations. Therefore, the post-overlay acceptance and preservice examinations should be included in Inservice Examination Item (2) above to ensure that the overlaid DMW contains no planar flaws in order for the weld to be eligible for a 10-year inspection frequency.

Response:

FENOC concurs with the proposed change. Request RR-A32 has been updated to incorporate the proposed changes.

(d) Inservice Examination Item (3) should be revised to read "...For welds whose pre-overlay examination, post-overlay acceptance examination, or preservice examination reveal [~~inside surface connected~~] planer [sic] flaws, the examination volume in Fig. A2-2 shall be ultrasonically examined once during the first or second refueling outage following application of the optimized weld overlay..." The reason for the staff suggested wording and removal of "inside surface connected" is the same as above Question 4(c).

Response:

FENOC concurs with the proposed change. Request RR-A32 has been updated to incorporate the proposed changes.

(e) Inservice Examination Items (2) and (3) allow the OWOL to be placed in a sample inspection where 25 percent of the population (a total of 4 DMWs) will be examined once each inspection interval. The NRC staff thinks that all DMWs with OWOL need to be examined once per inspection interval and should not be placed in a sample inspection population. If a flaw develops in the outer 25 percent wall thickness region of the original DMW, the OWOL's ability to maintain the pressure boundary may be reduced because the OWOL by itself cannot support the pipe loading without taking credit for 25 percent wall thickness of the base metal. Therefore, all DMWs with OWOLs need to be inspected periodically.

Response:

FENOC concurs that all dissimilar metal welds with optimized weld overlays should be examined once each inspection interval. Request RR-A32, Attachment 2, Inservice Inspection items (1) and (2) have been updated to remove the 25 percent sampling methodology.

(f) Inservice Examination Item (1) requires that "...The weld overlay inspection interval shall not be greater than the life of the overlay as determined in A1.3(a) above..." Section A1.3 is in Attachment 1 of the relief request submittal, but Section A1.3(a) does not exist. Also, Section A1.3 discusses inspectability considerations--not inspection intervals. Please clarify the reference of A1.3(a).

Response:

Request RR-A32, Attachment 2, has been updated to change "A1.3(a)" to "Section A2.2."

(g) Inservice Examination Item (5) requires that "...If a planar circumferential flaw is detected in the outer 50 percent of the base material thickness or if a planar axial flaw is detected in the outer 25 percent of the base material thickness, it shall meet the design analysis requirements of A2.2..." Please explain the above requirement in detail,

specifically the design analysis requirements of A2.2. For example, explain how a planar flaw that occurs in the outer 50 percent of the base metal meets the design analysis requirements of A2.2. Clarify whether the subject planar flaw is a subsurface flaw or an inside-surface connected flaw.

Response:

The circumferential planar flaw design basis is 75 percent through-wall and fully circumferential. The PDI qualification ensures that a planar flaw that is 50 percent through-wall will be detected. If within the interval a circumferential flaw is detected that is greater than 50 percent through wall and less than 75 percent through wall, it will be evaluated using the methodology of ASME IWB-3640. The next operating interval will be established based upon the results of that evaluation.

The same approach will be used for a detected axial planar flaw that is greater than 75 percent through-wall; it will be evaluated using the methodology of ASME IWB-3640. The next operating interval will be established based upon the results of that analysis.

Inspections performed after the application of the weld overlay are not able to detect inside-surface-connected flaws in the existing dissimilar metal weld. Determination of whether a flaw is a surface or subsurface flaw is made at the time of the inspection.

5. Your Response to 1.18.1.a—Temper bead weld area on ferritic material

(a) In response to Question 1.18.1.a, you stated that two or more residual stress analyses of different surface areas over the ferritic material will be prepared. (1) Provide the dimensions of the weld surface areas on the ferritic base metal that will be modeled in the residual stress analysis. (2) Discuss whether the analyzed weld surface areas bound the weld surface area on the ferritic material for the actual installed OWOL. (3) Please provide drawings of the weld overlay design including overlay dimensions on the reactor coolant pump discharge and suction nozzle and pipe configuration (the safe end and elbow). The drawing should identify where the weld overlay begins and ends on the pump discharge and suction pipe with proper dimensions.

Response:

(1) Dimensions of the weld surface areas are provided in Enclosure E. The analysis is vendor proprietary information.

(2) As discussed in the response to 5(b), sensitivity analyses have demonstrated that larger weld overlay coverage areas result in lower residual stress (more residual stress benefit) on the inner pipe surface, due to additional shrinkage. Therefore, the analyzed weld surface areas do not bound the weld surface area on the ferritic material for the optimized weld overlay, since doing so would be non-conservative.

(3) Details of the optimized weld overlay design are provided on Enclosure R.

(b) In the original submittal dated January 30, 2009, you proposed a weld surface area on ferritic metal of 600 square inches. In the revised submittal dated July 13, 2009, the weld surface area is increased to 700 square inches. You referenced Electric Power Research

Institute (EPRI) Report 1011898, November 2005, as the technical basis. EPRI did not perform a stress analysis based on 700 square inch area. However, EPRI concluded that users may justify repairs beyond 500 square inches by additional analysis and evaluation. The NRC staff is concerned with the potential for distortion; additional stresses imposed on the pipe, elbow and nozzle; changes to the microstructure of the base metal (formation of martensite); and other detrimental impact on the base metal. To demonstrate the acceptability of the proposed 700 square inches of weld area on the subject pipe configuration using ambient temperature temper bead welding, the licensee may propose the following options:

(1) Provide information that show favorable operating experience for similar weld overlays that have been installed in the field. The licensee may use applicable operating experience from outside of nuclear power plants, e.g., fossil power plants, natural gas pipe lines, chemical plants, and refinery plants; (2) Provide information from mockups that show favorable stress conditions and acceptable overlay product; or (3) Perform a finite element analysis that is similar to the analysis performed by EPRI in its qualification of the 100 and 300 square-inch weld areas to show favorable stress distribution and no distortion.

Response:

FENOC elected to have a finite element sensitivity analysis performed similar to that performed by the Electric Power Research Institute (EPRI). This sensitivity analysis (Enclosure Q) modeled temper bead weld overlay areas of 500, 750, and 1000 square inches in order to bound the 700 square inch value. The analysis demonstrates favorable residual stress distribution on the inside surface with minimal radial shrinkage and distortion, and reveals that increasing the weld overlay coverage areas improves the inside surface residual stress benefit. Request RR-A32 has been updated to discuss this analysis.

(c) In response to 1.18.a, you stated that "...This [stress analysis for the 700 square inch area] summary document will reference the calculations from which the residual stress and radial displacement information is extracted and will be forwarded to the NRC as discussed within Commitment 1 attached to FENOC's correspondence dated January 30, 2009..." As stated in the January 30, 2009 submittal, the reports in Commitment 1 will be submitted to the NRC prior to entry to Mode 4 of operation. The Mode 4 schedule is not adequate because the staff needs the stress analysis information as a basis for its safety evaluation of RR-A32 and RR-A33. Therefore, we request that the analysis that demonstrates the validity of a 700 square inch area be submitted as part of your response to this RAI. The analysis report should include sufficiently detailed information (e.g., assumptions, models, methodology, results, and conclusions).

Response:

The analyses that demonstrate the validity of the 700 square inch weld overlay coverage area are provided in Enclosure D (vendor proprietary information) and Enclosure Q. Request RR-A32 has been updated to discuss the finite element sensitivity analysis.

6. Your Response to 1.21. The proposed revision to paragraph 3.2(a) in Attachment 5 of the relief request is different from the licensee's response to Question 1.21. Also, there is a typographical error in the alternative ("though-base-metal position" should be

"through-base-metal position"). The same typographical error appears in RR-A33, Attachment 2.

Response:

Request RR-A32, Attachment 5, paragraph 3.2(a) has been updated to delete the word "outer." FENOC's response to the NRC's 6/11/09 Question 1.21 and Request RR-A32 are now aligned.

Request RR-A32, Attachment 5, and Request RR-A33, Attachment 2, have been updated to correct the cited typographical errors.

7. Section A2.2, Residual Stress Analysis, Item (1) states that "...The resulting residual stresses on the inside surface over the entire length of primary water stress-corrosion cracking (PWSCC) susceptible material under the optimized weld overlay shall be less than or equal to 10,000 pounds per square inch tensile..."

ASME Code, Section XI, Code Case N-770 (Reference 1) has established that as part of an effective stress improvement mitigation technique, a compressive stress state is required on the wetted surface of all susceptible material used in dissimilar metal (DM) weld applications. This is consistent with the staff position and was developed, in part, due to the uncertainties in precise finite element stress modeling of the wetted surface of DM welds. Further, the staff position was not established to define a stress level at which crack initiation could not occur, but rather to provide a conservative stress value that along with calculated stress levels throughout the volume of the weld will provide a basis for reasonable assurance of structural integrity for a stress improved DM weld. Please provide additional basis, including supporting data, analyses and operational experience, to support allowing a wetted surface stress threshold of 10 ksi.

Reference 1: ASME Code, Section XI, Code Case N-770, "Alternative Examination Requirements and Acceptance Standards for Class 1 PWR Piping and Vessel Nozzle Butt Welds Fabricated with UNS N06082 or UNS W86182 Weld Filler Material With or Without Application of Listed Mitigation Activities, Section XI, Division 1, Appendix I [sic]."

Response:

MRP-169 [Reference 7] established the following criteria for acceptability of weld overlay residual stresses:

1. Acceptable residual stresses for purposes of satisfying these criteria are those which, after application of the weld overlay, are compressive on the inside surface of the nozzle, over the entire length of PWSCC susceptible material on the inside surface, at operating temperature, but prior to applying operating pressure and loads. After application of operating pressure and loads, the resulting inside surface stresses must be less than 10,000 pounds per square inch (psi) tensile.

2. A separate primary water stress corrosion cracking (PWSCC) crack growth criterion must also be satisfied to demonstrate the acceptability of the post-weld overlay residual stress distribution. This criterion requires that any cracks detected in the pre- or post-overlay inspections, or postulated undetected cracks that are not within the applicable weld overlay examination volumes in the PWSCC susceptible material, would not grow by PWSCC and fatigue to the point that they would violate the overlay design basis

(75 percent through-wall for optimized weld overlays or 100 percent through-wall for full structural weld overlays). Since there is no generally accepted PWSCC crack growth threshold for Alloy 82/182 weld metals, satisfying this criterion generally requires that the crack tip stress intensity factor due to residual stresses, operating pressure and sustained, steady-state loads, be compressive up to the greater of the maximum flaw size detected (either pre- or post-overlay) or the maximum flaw size in PWSCC susceptible material that could be missed by the applicable inspections.

The above combination of inside diameter surface stress and crack growth criteria, in conjunction with required post-overlay inspections, provides preemptive mitigation against initiating new PWSCC cracks after application of the weld overlay. Further, it provides assurance that initiation of new cracks and/or propagation of pre-existing cracks would not violate the overlay design basis.

The 10,000 psi tensile stress limit is consistent with (but conservative to) the limit of 20,000 psi which was used to establish the required examination volume for Alloy 600 reactor pressure vessel top head nozzles [References 1 and 2]. The reduction from 20,000 psi to 10,000 psi is conservative and sufficient to address potential differences between the PWSCC susceptibility of Alloy 600 and its weld metals (Alloys 82 and 182).

Industry data exists to support the threshold concept for PWSCC initiation in Alloy 600 and its weld metals Alloy 82, 132 and 182 [References 3, 4, 5, and 6]. This data includes temperature and impurity concentration in the coolant and stress limits, below which the initiation of stress corrosion cracking is difficult and essentially of no engineering significance. A similar stress limit for Alloy 600 base metal has also been defined [Reference 4].

Two types of tests of PWSCC initiation in Alloy 182 weld metal, as illustrated in Figure 1, exhibited no failures at stress levels less than 58,000 psi. Based upon the data, it was concluded that Alloy 182 is susceptible to stress corrosion cracking in pressurized water reactor primary water only if the applied stress exceeds the yield stress [Reference 3].

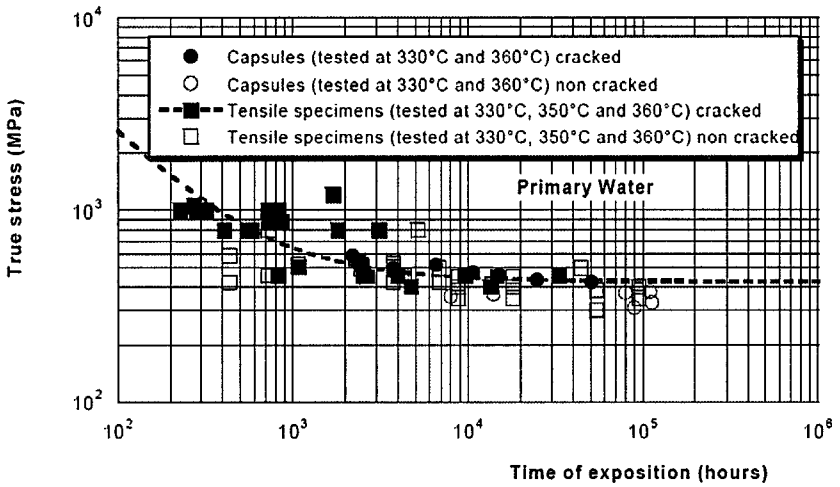

Figure 1 Time to Failure of Alloy 182 in Primary Water as a Function of Stress

Data from pressurized cylinder experiments reveal a relationship between hoop stress and time to leakage and establishes a threshold stress limit near 58,000 psi for PWSCC initiation in Alloy 182 [Reference 5].

Reference 6 presents crack growth rate data for microcracks initiated in two different types of crack initiation specimens. Although reported as crack growth data, the experiments were actually crack initiation tests, since the crack growth rate was computed based on failure time divided into thickness of the thin walled specimens tested under uniform stress conditions. Samples tested at stress levels down to approximately 47,000 psi, illustrated in Figure 2, revealed crack growth rates slow enough (0.0012 inch/year) to be of little engineering significance.

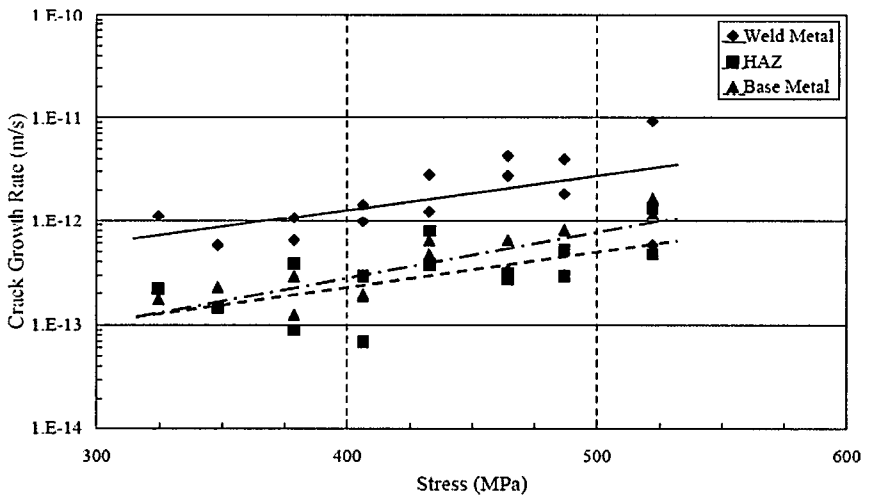

Figure 2 Relationship between Stress and the Crack Growth Rate of PWSCC Microcracks of a Welded Specimen by Alloy 132 in 325°C (617°F)

The 10,000 psi limit is 18 to 22 percent of the minimum measured stresses at which PWSCC initiation has been observed in Alloy 132 and 182 weld metals in the above laboratory experiments. Therefore, this limit ensures a low probability of initiating new PWSCC cracks after weld overlay application, with significant margin to allow for uncertainties that may occur in attempting to precisely model the magnitude of tensile stress on the wetted surface of inservice dissimilar metal welds.

MRP-169 residual stress acceptance criteria impose not just a crack initiation limit, based on inside surface stress, but criteria to preclude both crack initiation and crack growth. A separate PWSCC crack growth criterion must be satisfied to demonstrate the acceptability of the post-overlay residual stress distribution, not just for observed cracks, but for conservatively postulated cracks that might escape detection. Specifically, the design must demonstrate that any cracks in PWSCC-susceptible material that are not within the pre- and post-overlay exam volumes will not grow to the point that they would violate the overlay design basis.

References:

1. Materials Reliability Program Generic Evaluation of Examination Coverage Requirements for Reactor Pressure Vessel Head Penetration Nozzles (MRP-95), EPRI, Palo Alto, California, 2003.
2. Code Case N-729, Alternative Examination Requirements for PWR Closure Heads With Nozzles Having Pressure-Retaining Partial-Penetration Welds, Section XI, Division 1
3. C. Amzallag, et al, "Stress Corrosion Life Assessment of 182 and 82 Welds Used in PWR Components," Tenth International Conference on Environmental Degradation of Materials in Nuclear Power Systems - Water Reactors,", August 5 to 9, 2001.
4. D. Van Rooyen, "Review of the Stress Corrosion Cracking of Inconel 600," Corrosion, Vol. 31, No. 9, September 1975, p. 327.
5. P. Scott, et al, "Examination of Stress Corrosion Cracks in Alloy 182 Weld Metal After Exposure To PWR Primary Water," 12th International Conference on Environmental Degradation of Materials in Nuclear Power System – Water Reactors.
6. Y. Nishikawa, N. Totsuka and K. Arioka, "Influence of Temperature on PWSCC Initiation and Crack Growth Rate (Susceptibility) of Alloy 600 Weld Metals," Corrosion 2004, Paper No. 04670.
7. Material Reliability Program: Technical Basis for Preemptive Weld Overlays for Alloy 82/182 Butt Welds in PWRs (MRP-169) Revision 1, EPRI, Palo Alto, California, June 2008.

8. Section A1.5 of RR-A32 Attachment 1 discusses the leak-before-break evaluation with respect to the OWOL. The OWOL have less thickness than the full structural weld overlays (FSWOL). The OWOL is unable, by itself, to satisfy structural integrity design requirements. Instead, the OWOL design requires a portion of the underlying Alloy 82/182 DM weld material to remain intact and carry a portion of the loads. This original weld material is susceptible to cracking. In order to understand potential limitations of OWOLs, the NRC staff has considered the possibility that either the OWOL design or installation process does not perform as expected, or a large pre-existing crack was missed by nondestructive examination (NDE), and a crack grows in the original weld after the OWOL is applied. During initial phases of crack growth, bending and residual stress variations and metallurgical inhomogeneity would lead to uneven growth. However, once a portion of a surface crack grew deep enough to encounter the crack resistant overlay material, it would stop growing in the depth direction at that azimuthal location. Other segments of the crack could continue to grow deeper until they also reach the overlay interface. This could continue until the remaining uncracked ligament of original weld material is insufficient to adequately reinforce the OWOL material, at which point the mitigated weld may fail without prior leakage during a design basis event.

In a FSWOL, the corrosion and PWSCC resistance of the overlay material can be credited to prevent crack growth into the overlay in the event that a large pre-existing crack was missed by NDE, or in the event that design deficiencies or misapplication of the FSWOL resulted in unanticipated tensile residual stress fields. If large cracks occur in the original DM weld material under a FSWOL, the FSWOL can withstand full design loading without failing; the PWSCC resistant material preserves the FSWOL load carrying ability and minimizes the likelihood of pipe rupture. In contrast, if the same deficiency in design or application affects the OWOL, the OWOL material, precisely because it is resistant to PWSCC, can cause small circumferential cracks in the original dissimilar metal weld to

grow deep around the entire circumference, in which case the OWOL may become unable to withstand its design loading. In light of this possibility, please explain why application of an OWOL to a DMW is an appropriate mitigation method, and why its application will not invalidate previously approved leak-before-break analyses.

Response:

The combination of residual stress and crack growth analyses performed as part of the optimized weld overlay (OWOL) design process, plus process controls during in-plant weld overlay application, provide a high level of assurance that the residual stress improvements predicted for an OWOL will be present. Large unidentified flaws resulting from unexpected flaw growth is further precluded by conducting PDI-qualified ultrasonic testing exams before and after application of the OWOL, as well as periodic inservice inspections. For flaws of the type hypothesized by the NRC staff, the probability of detection is nearly 100 percent.

In addition, analyses performed to specifically address the NRC staff's concern (a flaw that propagates 100 percent through the original Alloy 182/82 weld and 360 degrees circumferentially around the nozzle) have determined that for the Davis-Besse optimized weld overlay design, structural safety margins required by the ASME Code are still maintained for both normal and normal plus seismic loading conditions. The results of these analyses for the DBNPS reactor coolant pump discharge nozzles are summarized in Case OWOL1 within the following table (Table 1). Table 2 then provides the required ASME Code margins, for comparison.

Table 1 – Net Section Collapse Analyses* of DBNPS Optimized Weld Overlays under Limiting Flaw Assumptions

						Structural Factors		
Case:	OD (inches)	t-nozz (inches)	t-WOL (inches)	t-comb. (inches)	360° Flaw Depth	Normal Oper.	Norm + OBE	Norm + SSE
OWOL	34.1	3.05	0.65	3.700	75%	7.2	4.72	3.58
OWOL1	34.1	3.05	0.65	3.700	100%	3.33	2.18	1.66

Comment [CJH1]: Values extracted from SIA Calculation 0800368.380, Revision A, Table 5, Page 11 of 11.

Comment [CJH2]: Values extracted from SIA Calculation 0800368.380, Revision A, Table 5, Page 11 of 11.

*The Structural Integrity Associates computer code ANSC [Reference 1] was used to determine net section collapse limit loads for the following two cases:

1. OWOL: nozzle-specific optimized weld overlay design with an assumed flaw 360 degrees circumferential and 75 percent through the original dissimilar metal weld (i.e., design basis condition for an optimized weld overlay)
2. OWOL1: nozzle-specific optimized weld overlay design with an assumed flaw 360 degrees circumferential and 100 percent through the original dissimilar metal weld (i.e., the flaw hypothesized by the NRC staff)

As noted above, Table 2 (below) lists the current ASME Section XI Code required structural factors for piping flaw evaluations [Reference 2]. These structural factors provide acceptable levels of quality and safety for the hypothesized flaw, which is not an optimized weld overlay design condition, and the occurrence of which is unlikely due to the design and inspection requirements for the optimized weld overlay.

Table 2 – ASME Section XI Structural Factors for Circumferential Flaw Evaluation

	Required Structural Factor	
Service Level	Membrane Stress	Bending Stress
Level A (Normal)	2.7	2.3
Level B (Upset)	2.4	2
Level C (Emergency)	1.8	1.6
Level D (Faulted)	1.3	1.4**

** A structural factor of 1.4 for normal plus SSE loading (Level D – Faulted) is equivalent to the requirements of the NRC's Standard Review Plan (SRP) 3.6.3 for a postulated through-wall, detectible leakage flaw in leak-before-break (LBB) analyses. As such, the OWOL case demonstrates essentially the same level of assurance that the probability of fluid system piping rupture is extremely low as would a LBB analysis performed in accordance with SRP 3.6.3.

From a historical perspective, over 30 years of weld overlay operating experience in boiling water reactors (BWRs), and more recently in pressurized water reactors (PWRs), has demonstrated the benefits of weld overlays on crack growth mitigation. Hundreds of weld overlays have been subjected to multiple inservice inspections during this time period. There are no industry documented cases of existing circumferential cracks under a weld overlay extending in length.

Based on the above discussion, the application of optimized weld overlays to the DBNPS reactor coolant pump discharge nozzles is an appropriate mitigation method and its application does not invalidate previously approved leak-before-break analyses.

1. ANSC Software for Determining Net Section Collapse of Arbitrarily Thinned Cylinder, Software User Manual, Structural Integrity Associates, San Jose, CA: 1994.
2. ASME XI, Appendix C, 2004 Edition. [Later version of ASME Section XI than applicable at DBNPS. It is only used to comparatively evaluate margins associated with the non-design basis assumption; it was not used for the design basis evaluation]

Questions and Comments Related to Relief Request RR-A33 (the FSWOL Design)

9. Your Response to 2.10. Section A1.4(c)(4) of RR-A33 states that "...If 100 percent of the susceptible material is not examined in the pre and post mitigation volume examinations, the inspection frequency of (3) above for cracked items shall be applied with the following exceptions..." Section A1.4(c)(4)(b) states that "...the weld may be placed in the 25 percent inspection sample population as noted in (3) above..." Section (3) referred to in the above statements does not provide inspection frequency nor sample inspection requirements. Please verify whether Section (3) in the aforementioned statements is correct.

Response:

Request RR-A33, Attachment 1, Sections A1.4(c)(4) and A1.4(c)(4)(b) have been updated to change "(3)" to "(2)".

FENOC also identified that the existing "(2)" within Section A1.4(c)(4) should be "(1)"; Request RR-A33 has been updated accordingly.

10. Section 1.4(c)(1) of RR-A33 should be revised to read: "...For welds whose pre-overlay examination, post-overlay acceptance examination, or preservice examination did not reveal any [~~inside surface connected~~] planar flaws, the welds shall be placed into a population of full structural weld overlays to be examined on a sample basis..."

Response:

FENOC concurs with the proposed change. Request RR-A33 has been updated to incorporate the proposed changes.

11. Section 1.4(c)(1)(2) of RR-A33 should be revised to read: "...For welds whose pre-overlay examination, post-overlay acceptance examination, or preservice examination reveal [~~inside surface connected~~] planar flaws, or for which a pre-overlay examination was not performed, the weld overlay shall be ultrasonically examined during the first or second refueling outage following application..."

Response:

FENOC concurs with the proposed change. Request RR-A33 has been updated to incorporate the proposed changes.

Proposed Alternative
in Accordance with 10 CFR 50.55a(a)(3)(i)

--Alternative Provides Acceptable Level of Quality and Safety--

1. American Society of Mechanical Engineers (ASME) Code Component(s) Affected

Components:	Reactor Coolant Pump Discharge Piping Dissimilar Metal Welds		
Code Class:	Class 1		
Examination Category:	B-J		
Code Item Number:	B9.11		
Weld Numbers:	**Description**	**Size**	**Materials**
RC-MK-B-59-1-SW143B	Reactor Coolant Pump 1-1 Discharge Piping	Nominal 28 inch ID	Stainless Steel Pipe / Alloy 82-182 Weld / Carbon Steel Elbow
RC-MK-B-44-1-SW69B	Reactor Coolant Pump 1-2 Discharge Piping	Nominal 28 inch ID	Stainless Steel Pipe / Alloy 82-182 Weld / Carbon Steel Elbow
RC-MK-B-61-1-SW69A	Reactor Coolant Pump 2-1 Discharge Piping	Nominal 28 inch ID	Stainless Steel Pipe / Alloy 82-182 Weld / Carbon Steel Elbow
RC-MK-B-56-1-SW143A	Reactor Coolant Pump 2-2 Discharge Piping	Nominal 28 inch ID	Stainless Steel Pipe / Alloy 82-182 Weld / Carbon Steel Elbow

Notes:
- Stainless Steel Pipe - A-376 Type 316 (P-8)
  Carbon Steel Elbow - A 516 Grade 70 (P-1) 24 degree elbow internally clad with SA 240-304L
- ID = Inside Diameter

2. Applicable Code Edition and Addenda

American Society of Mechanical Engineers Boiler and Pressure Vessel Code (ASME Code) Section XI – 1995 Edition through 1996 Addenda

3. Applicable Code Requirement

IWA-4410(a) of ASME Code Section XI states:
"Repair/replacement activities shall be performed in accordance with the Owner's Requirements and the original Construction Code of the component or system, except as provided in IWA-4410 (b), (c), and (d)."

IWA-4410(b) of ASME Code Section XI states in part:
"Later Editions and Addenda of the Construction Code, or a later different Construction Code, either in its entirety or portions thereof, and Code Cases may be used, provided the substitution is as listed in IWA-4221(b)."

IWA-4410(c) of ASME Code Section XI states:
"Alternatively, the applicable requirements of IWA-4600 may be used for welding and the applicable requirements of IWA-4700 may be used for heat exchanger tube plugging and sleeving."

ASME Code Section XI, Appendix VIII, Supplement 11 provides requirements for the qualification requirements for the ultrasonic examination of Overlaid Wrought Austenitic Piping Welds.

4. Reason for Request

Dissimilar metal welds containing nickel welding alloys 82 and 182 have experienced primary water stress corrosion cracking in components operating at pressurized water reactor temperatures.

The FirstEnergy Nuclear Operating Company (FENOC) proposes to mitigate the primary water stress corrosion cracking susceptibility of the Davis-Besse Nuclear Power Station (Davis-Besse) reactor coolant pump outlet dissimilar metal welds by installing an optimized weld overlay (OWOL) on the reactor coolant pump dissimilar metal welds. This approach provides an alternative to inspection alone as a means to assure the structural integrity of these locations. FENOC may apply an optimized weld overlay to the dissimilar metal Alloy 82/182 weld for flaws that meet the size and location criteria detailed in Attachment 2, Section A2.2.

Currently, there are no generically accepted criteria for a licensee to apply a full structural weld overlay or an optimized weld overlay to Alloy 82/182 weld material. The issue and addenda of ASME Code Section XI applicable to Davis-Besse does not contain requirements for weld overlays. Dissimilar metal weld overlays have been applied to components at Davis-Besse using the modified requirements of ASME Code Cases N-504-2 and N-638-1. However, since ASME Code Case N-504 (and its later versions) is written specifically for stainless steel pipe to pipe weld full structural overlays, and ASME Code Case N-638-1 contains unnecessary restrictions and requirements, an alternative is proposed. This request describes the requirements FENOC proposes to design and install optimized weld overlays on reactor coolant pump dissimilar metal welds.

5. Proposed Alternative and Basis for Use

Pursuant to 10CFR 50.55a (a)(3)(i), FENOC proposes the use of the alternative described in Attachments 2, 3 and 5 to this request. This alternative is based in part on the methodology contained in ASME Code Case N-740-2.

Appendix VIII, Supplement 11 of the 1995 Edition, 1996 Addenda of ASME Code Section XI [reference 1] specifies requirements for performance demonstration of ultrasonic examination procedures, equipment, and personnel used to detect and size flaws in full structural overlays of wrought austenitic piping welds. Appendix VIII does

not explicitly address optimized weld overlay applications. Relief is requested to allow use of the Performance Demonstration Initiative (PDI) program implementation of Appendix VIII for qualification of ultrasonic examinations used to detect and size flaws in the preemptive structural weld overlays of this request. The proposed modifications to Appendix VIII, Supplement 11 for use on optimized weld overlays are detailed in Attachment 5. Appendix VIII, Supplement 11 requires further qualification and modification for optimized weld overlay applications. Attachment 5 describes the proposed modifications to be implemented.

The use of the alternative described in Attachments 2, 3, and 5 is requested on the basis that the proposed requirements will provide an acceptable level of quality and safety.

ASME Code Case N-740-2 has been approved recently by the ASME Code Committee to specifically address full structural overlays on nickel alloy dissimilar metal welds. ASME Code Case N-740-2 also incorporates the latest approved versions of ASME Code Case N-638-1. However, ASME Code Case N-740-2 has not yet been accepted by the NRC in Regulatory Guide 1.147. ASME Code Case N-504-3 has been conditionally accepted in Revision 15 of Regulatory Guide 1.147 with the condition that the provisions of ASME Code Section XI, Nonmandatory Appendix Q, Weld Overlay Repair of Class 1, 2, and 3 Austenitic Stainless Steel Piping Weldments, must be met.

Electric Power Research Institute (EPRI) Materials Reliability Program Report MRP-169 [reference 8] provides the basis and requirements for optimized weld overlay design. Chapter 4 of MRP-169, Design Requirements, provides specific guidance on the design of overlays. Chapter 7 of MRP-169, Examination Requirements, also provides guidance on optimized weld overlay inspections. MRP-169, revision 1, was submitted for NRC review and approval in April 2008. This submittal included responses to NRC staff submitted requests for additional information on the document which were also incorporated into MRP-169, revision 1.

FENOC proposes to use the alternative requirements for design, analysis and preservice and inservice inspection of preemptive weld overlays enumerated in MRP-169, including the most recent revisions requested by the NRC, in accordance with Attachments 1 and 2. Weld overlay materials, surface preparation, welding requirements, pressure testing, and acceptance examination shall be performed in accordance with Attachments 2 and 3 which are based on methodology contained in ASME Code Case N-740-2. This approach provides an acceptable method for preventing primary water stress corrosion cracking and for reducing defects that may be observed in these welds to an acceptable size. The use of weld overlay filler metals that are resistant to primary water stress corrosion cracking (for example, Alloy 52/52M), weld overlay procedures that create compressive residual stress profiles in the original weld, and post overlay preservice and inservice inspection requirements provide assurance that structural integrity is maintained for the life of the plant. The weld overlays shall also meet the applicable stress limits from ASME Code Section III. Crack growth evaluations for primary water stress corrosion cracking and fatigue of as-found (or conservatively postulated) flaws shall demonstrate that structural integrity is maintained.

Rupture of the large primary loop piping at Davis-Besse has been eliminated as the structural design basis. The effects of the weld overlay application on the leak-before-break analysis have been evaluated to show the effects do not invalidate the conclusions of the existing design basis.

FENOC plans to perform a pre-overlay ultrasonic examination of the dissimilar metal Alloy 82/182 welds identified in Section 1. FENOC may apply an optimized weld overlay to the dissimilar metal Alloy 82/182 weld for flaws that meet the size and location criteria detailed in Attachment 2, Section A2.2. The requirements for the optimized weld overlay design and analyses are based upon MRP-169 as described in Attachment 1. Optimized weld overlay implementation requirements are detailed in Attachments 2 and 3. The requirements of ASME Code Cases N-504-3 and N-638-1, as modified by ASME Code Section XI, Nonmandatory Appendix Q, are compared to the requirements proposed in the request for relief within Attachment 4. NDE qualification requirements are detailed in Attachment 5.

Any indications discovered during the pre-overlay ultrasonic examination that are not inside surface connected will be evaluated in accordance with the requirements of ASME Section XI, and if required, repaired in accordance with IWA-4000.

Schematic Configuration for OWOL Locations

Reactor Coolant Pump Discharge Piping Dissimilar Metal Welds

The reactor coolant pump outlets (discharge) are fabricated from cast austenitic stainless steel and attached to 28-inch austenitic stainless steel piping which acts as a safe end. The piping is then attached to an elbow fabricated from carbon steel internally clad with stainless steel. The carbon steel elbow is buttered with Alloy 82/182 weld material. The dissimilar metal weld is fabricated from Alloy 82/182 weld metal.

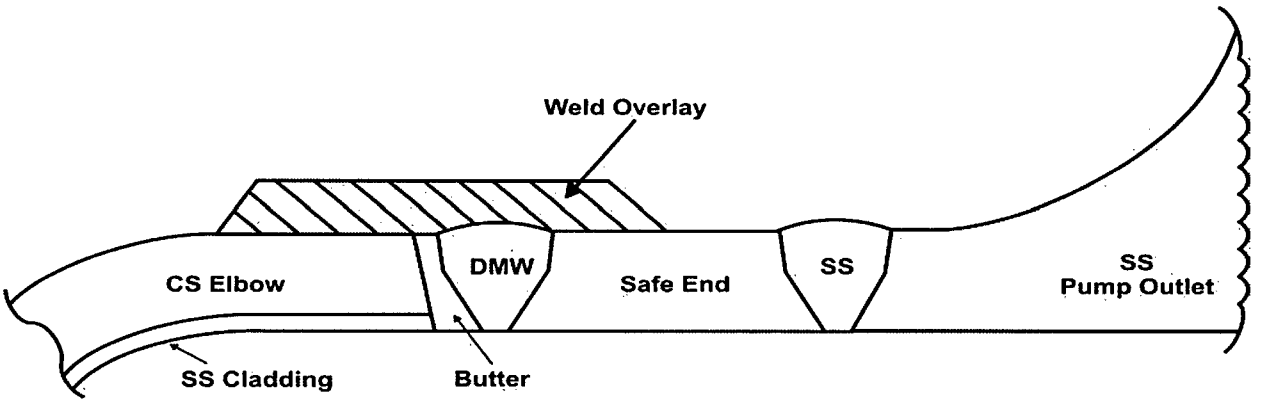

Notes:
1. Elbow – A-516, Grade 70, internally clad with SA240-304L
2. Safe End – A-376, Type 316
3. Cast Stainless Steel Pump Outlet (Discharge) – A-351 Grade CF8M, Type 316

Figure 5-1 Schematic Configuration for OWOL for Reactor Coolant Pump Outlets (Discharge)

Suitability of Proposed Post Overlay Nondestructive Examination (NDE)

As a part of the design of the weld overlay, the weld length, surface finish, and flatness are specified to allow qualified ASME Code Section XI, Appendix VIII ultrasonic examinations, as implemented through the EPRI PDI Program, of the weld overlay and the required volume of the base material and original weld. The examinations specified in this proposed alternative provide adequate assurance of structural integrity for the following reasons:

- The ultrasonic (UT) examinations to be performed with the proposed alternative are in accordance with ASME Code Section XI, Appendix VIII, Supplement 11, as implemented through the PDI. These examinations are considered more sensitive for detection of defects, either from fabrication or service induced, than either ASME Code Section III radiography or ultrasonic examination methods. Further, construction flaws have been included in the PDI qualification sample sets for evaluating procedures and personnel.

- ASME Code Section XI has developed acceptance criteria and evaluation methodology to be utilized with the results from these more sensitive examinations. They consider the materials in which the flaw indications are detected, the orientation and size of the indications, and ultimately their potential structural effects on the component. The acceptance criteria include allowable flaw indication tables for planar flaws (Table IWB-3514-2) and for laminar flaws (Table IWB-3514-3).

- A laminar flaw is defined in ASME Code Section XI as a flaw oriented within 10 degrees of a plane parallel to the surface of the component. This definition is applicable to welds and weld overlays as well as base materials. The standard imposed for evaluating laminar flaws in ASME Code Section XI is more restrictive than the ASME Code Section III standard for evaluating laminations. The Section XI laminar flaw standards, Table IWB-3514-3, are supplemented in Attachment 2 such that the total laminar flaw shall not exceed 10 percent of the weld overlay surface area and no linear dimension of the laminar flaw shall exceed 3 inches. For weld overlay areas where examination is precluded by the presence of the flaw, it is required to postulate the area as being cracked.

- Any planar flaws found during either the weld overlay acceptance or preservice examinations are required to meet the preservice standards of ASME Code Table IWB-3514-2. In applying the planar flaw standards, the thickness of the component is defined as the thickness of the weld overlay and the issue of any flaws masked from examination is addressed as a part of the proposed alternative.

- Weld overlays for repair of cracks in piping are not addressed by ASME Code Section III. ASME Code Section III utilizes nondestructive examination procedures and techniques with flaw detection capabilities that are within the practical limits of workmanship standards for welds. These standards are most applicable to volumetric examinations conducted by radiographic examination. Radiography (RT) of weld overlays is not practical because of the presence of radioactive material in the reactor coolant system and water in the pipes. The ASME Code Section III acceptance standards are written for a range of fabrication flaws including lack of fusion, incomplete penetration, cracking, slag inclusions, porosity, and concavity. However, experience and fracture mechanics have demonstrated that many of the flaws that would be rejected

using ASME Code Section III acceptance standards do not have a significant effect on the structural integrity of the component. The proposed alternatives in Attachments 2 and 3 were written to specifically address weld overlays, and not only does this alternative adequately examine the weld overlays, but it provides more appropriate examinations and acceptance criteria than the staff imposed position.

The ASME Code Section XI acceptance standards are the logical choice for evaluation of potential flaw indications in post-overlay examinations, in which unnecessary repairs to the overlays would result in additional personnel radiation exposure without a compensating increase in safety and quality, and could potentially degrade the effectiveness of the overlays by affecting the favorable residual stress field that they produce. They are consistent with previous criteria approved by the NRC for weld overlay installations. Weld overlays have been used for repair and mitigation of cracking in boiling water reactors for many years. In Generic Letter 88-01, the NRC approved the use of ASME Code Section XI inspection procedures for determining the acceptability of installed weld overlays. In addition, for a number of years the NRC has accepted various versions of ASME Code Case N-504 in Regulatory Guide (RG) 1.147 with no conditions regarding the use of ASME Code Section XI acceptance standards for determining the acceptability of weld overlays. ASME Code Case N-504 (and its later versions) was developed to codify the boiling water reactor weld overlay experience, and NRC approval is consistent with the NRC acceptability of boiling water reactor (BWR) weld overlays. Similarly, ASME Code Case N-638 was acceptable for use in RG 1.147 Revision 13 with no conditions and has been approved by the NRC for use in both boiling water reactor and pressurized water reactor (PWR) weld overlay installations using the ASME Code Section XI acceptance standards. The NRC staff found the use of the ASME Code Section XI, Appendix VIII, Supplement 11 acceptable for identifying both construction and service induced flaws in the Safety Evaluation Report (SER) for DC Cook Plant dated February 19, 2006 and tacitly approved the associated ASME Code Section XI acceptance criteria, Tables IWB-3514-2 and IWB-3514-3. The staff also accepted the use of Section XI acceptance standards in an SER dated July 21, 2004 for the Three Mile Island Plant, for disposition of flaws identified in a weld overlay by PDI qualified ultrasonic examinations, with additional restrictions similar to those proposed herein for regions in which inspection is precluded by the flaws.

Suitability of Proposed Ambient Temperature Temper Bead Technique

The overlays addressed by this alternative shall be performed using ambient temperature temper bead welding in lieu of post weld heat treatment, in accordance with Attachment 3. Research by the Electric Power Research Institute (EPRI) and other organizations on the use of an ambient temperature temper bead process using the machine gas tungsten arc welding (GTAW) process is documented in EPRI Report GC-111050 [reference 3]. According to the EPRI report, repair welds performed with an ambient temperature temper bead procedure utilizing the machine gas tungsten arc welding process exhibit mechanical properties equivalent to or better than those of the surrounding base material. Laboratory testing, analysis, successful procedure qualifications, and successful repairs have all demonstrated the effectiveness of this process.

The effects of the ambient temperature temper bead welding process of Attachment 3 on mechanical properties of repair welds, hydrogen cracking, cold restraint cracking, and extent of overlay coverage of ferritic base metal are addressed in the following paragraphs.

Mechanical Properties of Repair Welds

The principal reasons to preheat a component prior to repair welding is to minimize the potential for cold cracking. The two cold cracking mechanisms are hydrogen cracking and restraint cracking. Both of these mechanisms occur at ambient temperature. Preheating slows down the cooling rate resulting in a ductile, less brittle microstructure thereby lowering susceptibility to cold cracking. Preheat also increases the diffusion rate of monatomic hydrogen that may have been trapped in the weld during solidification. As an alternative to preheat, the ambient temperature temper bead welding process utilizes the tempering action of the welding procedure to produce tough and ductile microstructures. Because precision bead placement and heat input control are utilized in the machine gas tungsten arc welding process, effective tempering of weld heat affected zone (HAZ) is possible without the application of preheat. According to Section 2-1 of EPRI Report GC-111050, "the temper bead process is carefully designed and controlled such that successive weld beads supply the appropriate quantity of heat to the untempered heat affected zone such that the desired degree of carbide precipitation (tempering) is achieved. The resulting microstructure is very tough and ductile."

The IWA-4600 temper bead process also includes a postweld soak requirement. Performed at 300 degrees Fahrenheit for 4 hours (P-No. 3 base materials and conservative for P-1 materials of this thickness which are used in this application), this postweld soak assists diffusion of any remaining hydrogen from the repair weld. As such, the postweld soak is a hydrogen bake-out and not a postweld heat treatment as defined by the ASME Code. At 300 degrees Fahrenheit, the postweld soak does not stress relieve, temper, or alter the mechanical properties of the weldment in any manner. Since the potential for hydrogen absorption is greatly diminished by the use of gas tungsten arc welding temper bead process, no postweld soak is needed for this application.

The alternative in Attachment 2 establishes detailed welding procedure qualification requirements for base materials, filler metals, restraint, impact properties, and other procedure variables. The qualification requirements provide assurance that the mechanical properties of repair welds are equivalent to or superior to those of the surrounding base material.

Hydrogen Cracking

Hydrogen cracking is a form of cold cracking. It is produced by the action of internal tensile stresses acting on low toughness heat affected zones. The internal stresses are produced from localized build-ups of monatomic hydrogen. Monatomic hydrogen forms when moisture or hydrocarbons interact with the welding arc and molten weld pool. The monatomic hydrogen can be entrapped during weld solidification and tends to migrate to transformation boundaries or other microstructure defect locations. As concentrations build, the monatomic hydrogen recombines to form molecular hydrogen – thus generating localized internal stresses at these internal defect locations. If these stresses exceed the fracture toughness of the material, hydrogen induced cracking occurs. This form of cracking requires the presence of hydrogen and low toughness materials. It is manifested by intergranular cracking of susceptible materials and normally occurs within 48 hours of welding.

IWA-4600 establishes elevated preheat and postweld soak requirements. The elevated preheat temperature of 300 degrees Fahrenheit increases the diffusion rate of hydrogen

from the weld. The postweld soak at 300 degrees Fahrenheit was also established to bake-out or facilitate diffusion of any remaining hydrogen from the weldment. However, while hydrogen cracking is a concern for shielded metal arc welding (SMAW), which uses flux covered electrodes, the potential for hydrogen cracking is significantly reduced when using machine gas tungsten arc welding.

The machine gas tungsten arc welding process is inherently free of hydrogen. Unlike the SMAW process, gas tungsten arc welding filler metals do not rely on flux coverings that may be susceptible to moisture absorption from the environment. Conversely, the gas tungsten arc welding process utilizes dry inert shielding gases that cover the molten weld pool from oxidizing atmospheres. Any moisture on the surface of the component being welded vaporizes ahead of the welding torch. The vapor is prevented from being mixed with the molten weld pool by the inert shielding gas that blows the vapor away before it can be mixed. Furthermore, modern filler metal manufacturers produce wires having very low residual hydrogen. This is important because filler metals and base materials are the most realistic sources of hydrogen for the automatic or machine gas tungsten arc welding temper bead process. Therefore, the potential for hydrogen-induced cracking is greatly reduced by using the machine gas tungsten arc welding process. Extensive research has been performed by EPRI [reference 7] which provides a technical basis for starting the 48-hour hold after completing the third temper bead weld layer rather than waiting for the weld overlay to cool to ambient temperature. The hold time required by Code Case N-638-4 and N-740-2 shall be implemented in accordance with this latest research. This approach has been previously reviewed and approved by the NRC for pressurizer nozzle overlays.

Cold Restraint Cracking

Cold cracking generally occurs during cooling at temperatures approaching ambient temperature. As stresses build under a high degree of restraint, cracking may occur at defect locations. Brittle microstructures with low ductility are subject to cold restraint cracking. However, the ambient temperature temper bead process is designed to provide a sufficient heat inventory so as to produce the desired tempering for high toughness. Because the machine gas tungsten arc welding temper bead process provides precision bead placement and control of heat, the toughness and ductility of the heat affected zone is typically superior to the base material. Therefore, the resulting structure shall be appropriately tempered to exhibit toughness sufficient to resist cold cracking.

Area Limitation

IWA-4600 and early versions of Code Case N-638 for temper bead welding contained a limit of 100 square inches for the surface area of temper bead weld over the ferritic base metal. The associated limitation proposed in this alternative is 700 square inches.

EPRI Report NP-1011898, November 2005, [reference 2] describes the technical justification for allowing increased overlay areas up to 500 square inches over ferritic material. The white paper contained in this report notes that the original limit of 100 square inches in Code Case N-638-1 was arbitrary. It cites evaluations of a 12-inch diameter nozzle weld overlay to demonstrate adequate tempering of the weld heat affected zone (Section 2a of the white paper), residual stress evaluations demonstrating acceptable residual stresses in weld overlays ranging from 100 to 500 square inches (Section 2b of the white paper), and service history in which weld repairs exceeding 100 square inches were NRC approved and applied to dissimilar weld metal nozzles in several BWRs and PWRs

(Section 3c of the white paper). Some of the cited repairs are greater than 15 years old, and have been inspected several times with no evidence of any continued degradation.

Section 5.1, Analyses Conclusions, in EPRI Report NP-1011898, when evaluating the 100 square inch and 500 square inch repair sizes provides the following statement.

> "Results demonstrate that a larger weld repair area does not have a significant adverse effect on the weld residual stress. In some cases, the larger repair area is much more beneficial because of the lower tensile residual stress or higher compressive residual stress. Especially for the case of axial weld repair where an axial crack could exist, the hoop stress is more compressive or less tensile within the weld repair and outside the repair area. The larger repair area could be less susceptible to the crack growth, due to either stress corrosion or fatigue."

Section 5.2, Overall Conclusions, in EPRI Report NP-1011898, also states that:

> "The restriction on surface area for temper bead welding was arbitrary, is overly restrictive, leads to increased cost and dose for repairs and does not contribute to safety."
>
> Additionally, "there is no direct correlation of residual stresses with surface area of the repair either for cavity or overlay repairs done using temper bead welding. Cases have been analyzed up to 500 square inches that verify that residual stresses for cavity repairs are at an acceptable level and that residual stresses associated with weld overlay repairs remain compressive in the weld region for larger area repairs as well as for smaller area repairs."

Due to the outside diameter of the reactor coolant pump piping, the weld overlay repair may extend to greater than 600 square inches of surface area on the carbon steel component, but less than 700 square inches of surface area. Consequently, the proposed alternative includes a maximum individual weld overlay area requirement of 700 square inches discussed in the General Requirements of Attachment 3. A finite element sensitivity analysis using weld overlay areas of 500, 750, and 1000 square inches has been performed. This analysis demonstrates the benefit of increasing weld coverage areas and bounds the maximum 700 square inch individual weld overlay area.

Analyses and Verifications

The following list of analyses and verifications are performed subject to the specific design, analysis, and inspection requirements that have been defined in this request.

1. Nozzle specific stress analyses have been performed to establish a residual stress profile in the nozzle. Inside diameter (ID) weld repairs assumed in these analyses effectively bound any actual weld repairs that may have occurred in the nozzles. The analysis simulates application of the weld overlays to determine the final residual stress profile. Post weld overlay residual stresses at normal operating conditions result in a stress state on the inside surface of each component that ensures further crack initiation due to primary water stress corrosion cracking is highly unlikely.

2. Fracture mechanics analyses have been performed to predict crack growth. Crack growth due to primary water stress corrosion cracking and fatigue crack growth in the original dissimilar metal weld were evaluated. The crack growth analyses consider design loads and transients, plus the post weld overlay through-wall residual stress distributions, and demonstrate that the assumed cracks do not grow beyond the design bases for the weld overlays for the time period until the next scheduled inservice inspection. The crack growth analyses determine the time period for the assumed cracks to grow to the design basis for the weld overlays.

3. The analyses demonstrate that the application of the weld overlays do not impact the conclusions of the existing nozzle stress reports. ASME Code Section III stress and fatigue criteria are met for the regions of the overlays remote from observed (or assumed) cracks.

4. The original leak-before-break calculations have been updated with an evaluation demonstrating that due to the efficacy of the overlay for primary water stress corrosion cracking mitigation, concerns for original weld susceptibility to cracking has been resolved. The effects of the mitigation on the leak-before-break analysis demonstrate the effects of application of weld overlays do not invalidate the conclusions of the existing design basis.

5. Shrinkage shall be measured during the overlay application. Shrinkage stresses arising from the weld overlays at other locations in the piping systems shall be demonstrated to not have an adverse effect on the systems. Clearances of affected supports and restraints shall be checked after the overlay repair, and shall be reset within the design ranges as required.

6. The total added weight on the piping systems due to the overlays shall be evaluated for potential impact on piping system stresses and dynamic characteristics.

7. The as-built dimension of the weld overlays shall be measured and evaluated to demonstrate that they equal or exceed the minimum design dimensions of the overlays.

Summaries of the results of the analyses listed in Items 1 through 4 above have been made available to the NRC. Items 5 though 7 are performed following installation of the weld overlays and results shall be included in the design modification package closure documents. This information shall be available to resident or field inspectors for review as needed.

The following information will be submitted to the NRC within 14 days of completion of the final ultrasonic examination of the overlaid welds. Also included in the results will be a discussion of any repairs to the overlay material and/or base metal and the reason for the repair.

- A listing of indications detected [1]

[1] The recording criteria of the ultrasonic examination procedure to be used for the examination of the Davis-Besse overlays requires that all indications, regardless of amplitude, be investigated to the extent necessary to provide accurate characterization, identity, and location. Additionally, the procedure requires that all indications, regardless of amplitude, that cannot be clearly attributed to the geometry of the overlay configuration be considered flaw indications.

- The disposition of all indications using the standards of ASME Code Section XI, IWB-3514-2 and/or IWB-3514-3 criteria and, if possible, the type and nature of the indications[2]

Conclusions

Quality and Safety of Proposed Alternative

Implementation of the alternatives to IWA-4600 of ASME Code Section XI described in Attachments 2 and 3 of this request shall produce effective repairs for potential primary water stress corrosion cracking in the identified welds and improve piping geometries to permit ASME Code Section XI, Appendix VIII UT examinations as implemented through the PDI program. Weld overlay repairs of dissimilar metal welds have been installed and performed successfully for many years in both PWR and BWR applications. The alternative provides improved structural integrity and reduced likelihood of leakage for the primary system. Accordingly, the use of the alternative provides an acceptable level of quality and safety in accordance with 10 CFR 50.55a(a)(3)(i).

6. Duration of Proposed Alternative

The provisions of this alternative are applicable to the Third Ten-Year Inservice Inspection Interval for Davis-Besse which commenced on September 21, 2000 and will end on September 20, 2012.

The weld overlays installed in accordance with the provisions of this alternative shall remain in place for the design life of the repair established as described in Attachments 1, 2, 3, and 5.

7. References

1. ASME Boiler and Pressure Vessel Code, Section XI, 1995 Edition through 1996 Addenda, Appendix VIII, Supplement 11, "Qualification Requirements for Full Structural Overlaid Wrought Austenitic Piping Welds."

2. EPRI Report 1011898, November 2005, "RRAC Code Justification for the Removal of the 100 Square Inch Temper Bead Weld Limitation," EPRI, Palo Alto, CA, and Structural Integrity Associates, Inc., San Jose, CA.

3. EPRI Report GC-111050, November 1998, "Ambient Temperature Preheat for Machine GTAW Temper Bead Applications," EPRI, Palo Alto, CA, and Structural Integrity Associates, Inc., San Jose, CA.

4. ASME Boiler and Pressure Vessel Code, Section XI, 1995 Edition with Addenda through 1996, Appendix VIII, Supplement 10.

5. EPRI Materials Reliability Program Report: Crack Growth Rates for Evaluating PWSCC of Alloy 82, 182, and 132 Welds (MRP-115), EPRI, Palo Alto, CA, and Dominion Engineering, Inc., Reston, VA: November 2004. 1006696.

[2] The ultrasonic examination procedure requires that all suspected flaw indications are to be plotted on a cross sectional drawing of the weld and that the plots should accurately identify the specific origin of the reflector.

6. ASME Code Case N-740-2 "Dissimilar Metal Weld Overlay for Repair or Mitigation of Class 1, 2, and 3 Items,"

7. EPRI Report 1013558, Temperbead Welding Applications 48 Hour Hold Requirements for Ambient Temperature Temperbead Welding, EPRI, Palo Alto, CA and Hermann & Associates, Key Largo, FL, December 2006.

8. EPRI Materials Reliability Program: Technical Basis for Preemptive Weld Overlays for Alloy 82/182 Butt Welds in PWRs (MRP-169), Rev. 1, EPRI, Palo Alto, CA and Structural Integrity Associates, Inc., San Jose, CA; June 2008, 1016602.

9. G. Wilkowski, H. Xu, D. J. Shim, and D. Rudland, "Determination of the Elastic-Plastic Fracture Mechanics Z-factor for Alloy 82/182 Weld Metal Flaws for Use in the ASME Code Section XI Appendix C Flaw Evaluation Procedures," PVP2007-26733, Proceedings of ASME-PVP 2007: 2007 ASME Pressure Vessels and Piping Division Conference, San Antonio, TX, 2007.

10. NUREG/CR-4082, Volume 8, "Summary of Technical Results and Their Significance to Leak-Before-Break and In-Service Flaw Acceptance Criteria, March 1984-January 1989.

11. A.F. Deardorff et al, "Net Section Plastic Collapse Analysis of Two-Layered Materials and Application To Weld Overlay Design", ASME PVP 2006 Pressure Vessels and Piping Division Conference, Vancouver, Canada, July 2006, PVP2006-ICPVT11-93454.

12. W. Hübner, B. Johansson, and M. de Pourbaix, Studies of the Tendency to Intergranular Stress Corrosion Cracking of Austenitic Fe-Cr-Ni Alloys in High Purity Water at 300°C, Studsvik report AE-437, Nykoping, Sweden, 1971.

13. W. Debray and L. Stieding, Materials in the Primary Circuit of Water-Cooled Power Reactors, International Nickel Power Conference, Lausanne, Switzerland, May 1972, Paper No. 3.

14. C. Amzallag, et al., "Stress Corrosion Life Assessment of 182 and 82 Welds used in PWR Components," Proceedings of the 10th International Symposium on Environmental Degradation of Materials in Nuclear Power Systems - Water Reactors, NACE, 2001.

15. NUREG/CR-6907, "Crack Growth Rates of Nickel Alloy Welds in a PWR Environment," U.S. Nuclear Regulatory Commission (Argonne National Laboratory), May 2006.

16. EPRI Material Reliability Program Report: Primary System Piping Butt Weld Inspection and Evaluation Guidelines (MRP-139), EPRI, Palo Alto, CA: August 2005. 1010087.

17. ASME Code Case N-638-1 "Similar and Dissimilar Metal Welding Using Ambient Temperature GTAW Temper Bead Technique"

18. ASME Code Case N-638-2 "Similar and Dissimilar Metal Welding Using Ambient Temperature GTAW Temper Bead Technique"

19. ASME Code Case N-638-3 "Similar and Dissimilar Metal Welding Using Ambient Temperature GTAW Temper Bead Technique"

20. ASME Code Case N-638-4 "Similar and Dissimilar Metal Welding Using Ambient Temperature GTAW Temper Bead Technique"

21. ASME Code Case N-504-2 "Alternative Rules for Repair of Classes 1, 2, and 3 Austenitic Stainless Steel Piping"

22. ASME Code Case N-504-3 "Alternative Rules for Repair of Classes 1, 2, and 3 Austenitic Stainless Steel Piping"

23. ASME Code Case N-770 "Alternative Examination Requirements and Acceptance Standards for Class 1 PWR Piping and Vessel Nozzle Butt Welds Fabricated With UNS N06082 or UNS W86182 Weld Filler Material With or Without Application of Listed Mitigation Activities"

24. D. Buisine, et al., "PWSCC Resistance of Nickel Based Weld Metals with Various Chromium Contents," Proceedings: 1994 EPRI Workshop on PWSCC of Alloy 600 in PWRs, EPRI, Palo Alto, CA: 1995. TR-105406, Paper D5.

BACKGROUND AND TECHNICAL BASIS FOR DAVIS-BESSE REACTOR COOLANT PUMP DISSIMILAR METAL WELD OVERLAYS

The following discussion is based on Chapters 4 and 7 of MRP-169 and summarizes the background and technical basis for the design, analysis and inspection requirements for the reactor coolant pump dissimilar metal weld overlays to be applied at the Davis-Besse Nuclear Power Station (Davis-Besse). The design of the overlays shall be optimized weld overlays that meet the requirements stated in this attachment. Detailed requirements for the application of the overlays are specified in Attachments 2 and 3.

A1.1 Weld Overlay Sizing

The fundamental assumption of structural weld overlay sizing is that a crack is present in the original pipe or nozzle weld, which must be evaluated in accordance with ASME Code Section XI flaw evaluation rules. These rules are applied to Davis-Besse to establish an end-of-evaluation-period allowable flaw size and are based on the maximum size flaw that can be sustained in the component without violating original ASME Code Section III design margins (typically ASME Code Section III for primary system components). ASME Code Section XI also includes a general restriction that this flaw size shall not be greater than 75 percent of the component nominal wall thickness.

For preemptive weld overlays on dissimilar metal welds, an "optimized" structural weld overlay is defined in reference 8 as an acceptable alternative to full structural overlays when there are no flaws present in the weld or any observed flaws are limited in size. For an optimized weld overlay, the design basis flaw assumption is still 360 degrees around the weld, the same as for a full structural weld overlay, but with a depth equal to 75 percent of the original pipe wall. Key features of the optimized weld overlay design and inspections are as follows:

- An additional design requirement to show that ASME Code Section XI design criteria are met for a 100 percent through-wall axial flaw.
- An analysis of fatigue and primary water stress corrosion cracking crack growth that demonstrates that any growth shall not impair the ASME Code Section XI acceptance criteria for the optimized weld overlay at the end of the inspection interval.
- Nondestructive examination (NDE) qualification of procedures and personnel for axial flaws shall be done to the current requirements from Appendix VIII, Supplement 11 for a 75 percent through-wall flaw.
- NDE qualification for procedures and personnel for a 50 percent through-wall circumferential flaw to appropriately modified requirements of ASME Code Appendix VIII, Supplement 11 that include the appropriate flaw size distribution, flaw location distribution or grading unit requirements, as well as the demonstration acceptance criteria (for example, permissible false calls over the entire range of the inspected thickness.)

The optimized weld overlay flaw size assumption is a reasonable and conservative design basis for preemptive overlays, since:

1. The pipe shall have been inspected immediately prior to the overlay application, using an inspection technique qualified in accordance with ASME Code Section XI, Appendix VIII and found to exhibit no evidence of inner surface connected cracking greater than 50 percent (circumferential) or 75 percent (axial) of the wall thickness in the original weld.

2. Post-overlay ultrasonic examinations (and future inservice inspections) shall be required to verify the integrity of the applied weld overlay, and the examination volume for these inspections is increased to include the weld overlay plus the outer 50 percent of the original pipe wall as detailed in Section A1.3 - Inspectability Considerations.

With a design basis crack depth assumption for optimized weld overlay sizing that is 75 percent (circumferential) or 100 percent (axial) of original wall thickness, the assumed flaw already meets the general ASME Code Section XI 75 percent criterion without an overlay. Thus, the resulting optimized weld overlay thickness shall not be controlled by this somewhat arbitrary limit, but instead be based on the actual internal pressure and pipe loads at the location of the dissimilar metal weld being overlaid, and the ASME Code Section XI Paragraph IWB-3641 allowable flaw size criteria. In some cases, the minimum thickness required to provide compressive residual stresses may govern the overlay size as discussed in Section A1.2 – Residual Stress Improvement.

In applying Paragraph IWB-3641 allowable flaw size criteria to structural sizing of optimized weld overlays, some additional considerations apply that are not applicable to full structural weld overlays (FSWOLs). Specifically, since optimized weld overlays take some credit for the underlying dissimilar metal weld material, the design must account for potential lower toughness of that material (particularly at the fusion line with the low alloy or carbon steel component) [reference 9]. Reference 9 defines a Z-factor approach to address this concern. Furthermore, primary water stress corrosion cracking in the dissimilar metal weld may also be located near the stainless steel fusion line, and in such cases, tests and analyses [reference 10] have shown that the limit load solution for net section collapse should use the flow stress of the lower strength stainless steel material rather than that of the Alloy 82/182 weldment. An optimized weld overlay actually represents a special case in which the piping system loads are carried by a two-layer cylinder. The above low toughness/low strength considerations are applicable to the inner layer (that is, the outer 25 percent of the original dissimilar metal weld), but not to the outer layer (the Alloy 52 weld overlay, which carries a large portion of the load). An analysis technique for addressing this two-layer problem in weld overlay design is presented in reference 11. In the design of optimized weld overlays for Davis-Besse reactor coolant pump dissimilar metal welds, the two layer approach described in reference 11 shall be used to address potential cracks near the fusion lines of the dissimilar metal weld.

ASME Code Cases N-504-3 and N-740-2 also provide guidance for weld overlay length sizing, and these are the same for both full structural weld overlays and optimized weld overlays. The underlying requirement is that sufficient weld overlay length be provided on either side of the observed crack to allow for adequate transfer of axial loads between the pipe and the weld overlay. For axisymmetric loading of a cylinder, local loading effects can be shown to attenuate to a small fraction of their peak value at an axial distance of $0.75\sqrt{Rt}$ from the point of loading (where R is the outer radius and t is the nominal wall thickness of the cylinder). Thus, if the weld overlay length is set equal to $0.75\sqrt{Rt}$ on either side of the crack, resulting in a total weld overlay length of $1.5\sqrt{Rt}$, the overlay shall extend beyond any locally elevated stresses due to the crack. In application of weld overlays preemptively, however, no crack will have been detected, so the

above criterion is conservatively applied such that the minimum weld overlay length must be $0.75\sqrt{Rt}$ beyond either side of the susceptible material. This shall result in a total weld overlay length equal to $1.5\sqrt{Rt}$ plus the length of susceptible material (Alloy 82 or 182 weld metal and buttering) on the outside diameter surface of the original dissimilar weld metal. It is noted that the $0.75\sqrt{Rt}$ recommendation is only a rule of thumb, and that shorter lengths may be used if justified by stress analysis of the specific optimized weld overlay configuration, to demonstrate that adequate load transfer and stress attenuation are achieved.

Other considerations also factor into the Davis-Besse reactor coolant pump dissimilar weld metal overlay designs. These include that the overlays must be of sufficient length and thickness to achieve the desired tensile residual stress reduction over the entire extent of susceptible material on the inside surface of the component discussed in Section A1.2, that the length and other aspects of the weld overlay design result in an inspectable configuration discussed in Section A1.3, and that no unacceptable structural discontinuities are created. For optimized weld overlays that overlay a tapered transition (or create one), the design must satisfy the ASME Code Section III (latest edition) requirements of NB-4250 that allow for a maximum 30 degree transition angle between adjacent sections, unless detailed analyses are performed of the specific configuration to establish applicable stress indices for fatigue evaluation.

The specific overlay design and analysis requirements for the Davis-Besse reactor coolant pump dissimilar metal welds are itemized in Attachment 2, Section A2.2.

A1.2 Residual Stress Improvement

A key aspect of the weld overlay design process is to demonstrate that favorable tensile residual stress reduction occurs such that primary water stress corrosion cracking initiation and growth is mitigated. Extensive analytical and experimental work was performed on weld-overlaid boiling water reactor pipe-to-pipe welds of various pipe sizes to demonstrate that favorable residual stresses result for full-structural weld overlays [reference 8]. A recent preemptive weld overlay test program also demonstrated that measured residual stresses in a typical pressurized water reactor mid-sized dissimilar weld metal weld overlay were highly favorable when applied to a weld with a severe inside surface repair [reference 8, chapter 5].

Joint specific, overlay specific weld residual stress analysis shall be performed for each unique Davis-Besse reactor coolant pump dissimilar weld metal optimized weld overlay configuration. These shall be performed with analysis methods and tools that are appropriate for this type of analysis, including transient thermal analysis capability, non-linear elastic-plastic modeling capability, and temperature dependent material properties. The residual stress analyses shall consider the heat efficiency factor associated with the actual welding process, thermal boundary conditions (wet or dry) and interpass temperature limits.

Finally, the residual stress condition of the dissimilar weld metal joint has a significant bearing on its susceptibility to primary water stress corrosion cracking, especially as influenced by in-process repairs performed during plant construction. In fact, in essentially all cases in which primary water stress corrosion cracking has been discovered in pressurized water reactor butt welds, evidence of significant in-process repairs during construction has been found. Thus to adequately demonstrate the favorable residual stress effects of a weld overlay, the residual stress analyses start with a highly unfavorable, pre-overlay residual stress condition such as that which would result from an inside diameter surface weld repair during construction. If the nozzle-specific weld overlay design is shown to produce favorable residual stresses in this severe case, it mitigates primary water stress corrosion cracking in the dissimilar weld metal. Acceptable

residual stresses for purposes of satisfying this requirement are those which, after application of the weld overlay, are compressive on the inside surface of the nozzle, over the entire length of primary water stress corrosion cracking susceptible material on the inside surface, at operating temperature, but prior to applying operating pressure and loads. After application of operating pressure and loads, the resulting inside surface stresses must be less than 10,000 pounds per square inch tensile. As documented in references 12 through 14, laboratory data and field observations have shown that high stresses, on the order of the material yield strength, are necessary to initiate primary water stress corrosion cracking. Thus limiting inside diameter surface stresses under sustained steady state conditions to less than 10,000 pounds per square inch ensures a very low probability of initiating new primary water stress corrosion cracking cracks after application of the weld overlay.

A separate primary water stress corrosion cracking crack growth criterion shall be satisfied to demonstrate the acceptability of the post-weld overlay residual stress distribution. This criterion requires that any cracks detected in the pre- or post-overlay inspections, or that are not within the examination volumes in the primary water stress corrosion cracking susceptible material, would not grow by primary water stress corrosion cracking to the point that they would violate the overlay design basis. Since there is no generally accepted primary water stress corrosion cracking crack growth threshold for Alloy 82/182 weld metals, satisfying this criterion generally requires that the crack tip stress intensity factor due to residual stresses, operating pressure and sustained, steady-state loads, be compressive up to the greater of the maximum flaw size detected (either pre- or post-overlay) or the maximum flaw size in primary water stress corrosion cracking susceptible material that could be missed by the applicable inspections.

The above combination of inside diameter surface stress and crack growth criteria, in conjunction with required post-overlay inspections, provides protection against initiating new primary water stress corrosion cracking cracks after application of the weld overlay and/or propagation of pre-existing cracks that would violate the overlay design basis.

A1.3 Inspectability Considerations

One additional aspect of weld overlay design is that it must be inspectable. As discussed previously, post overlay examination requirements for optimized weld overlays include the weld overlay itself, plus the outer 50 percent of the original pipe wall thickness. This examination requirement applies to optimized weld overlays, which use as their design basis a crack completely through the original pipe wall thickness. The 50 percent of original pipe wall thickness examination requirement is seen as providing added margin by verifying the arrest of an existing flaw and advanced warning in the unlikely case that the crack is not arrested before propagating into the weld overlay. In this case, a flaw would violate the design basis if it extended into the outer 25 percent of the pipe wall. Thus the examination must provide additional coverage to preserve a similar "advanced warning" examination volume. Thus, since the optimized weld overlay design basis flaw is 75 percent of the original pipe wall for circumferential flaws, then the post-weld overlay examination (and subsequent inservice inspections) must cover the weld overlay material plus the outer 50 percent of the original wall thickness in the primary water stress corrosion cracking susceptible material.
A summary of the required post-overlay examinations, overlay acceptance examinations, preservice inspections and inservice inspections is included in Attachment 2, Section A2.3.

ASME Code Section XI, 1995 Edition and later includes NRC accepted rules for inspection of welds in piping that require the procedures, equipment, and personnel to be qualified by a performance demonstration in accordance with ASME Code Section XI, Appendix VIII,

Supplement 11. The utilities sponsored a performance demonstration initiative (PDI), implemented at the EPRI Nondestructive Examination Center, which satisfies these requirements, as amended for weld overlay repairs, and a number of organizations have successfully qualified personnel and techniques to inspect weld overlays under that program. Therefore, as has been the case for full structural weld overlay repairs, ASME Code Section XI, Appendix VIII, Supplement 11 shall be implemented for optimized weld overlays. The overlay design, including surface preparation specifications, shall be reviewed to confirm that an examination of the optimized weld overlay can be performed in accordance with the PDI qualification requirements as described in Attachment 2.

A1.4 Fatigue Considerations

There are two issues that must be addressed from a fatigue viewpoint relative to installation of a weld overlay on an existing weld. The first involves evaluation of potential growth of cracks due to cyclic loadings at the overlay location. The second involves assuring that additional stresses are not created by the application of the overlay that would contribute to an unacceptable end-of-life fatigue usage factor in the region where the overlay is being applied.

The sensitivity to fatigue effects depends upon whether or not there are significant cyclic loadings at the overlay location and if there are structural discontinuities in addition to the overlay that result in stress concentrations. The most severe cyclic loading effects are generally due to thermal transients. The effects of pressure cycles are generally not significant since the applied stresses must meet primary stress limits in the design process. Piping thermal expansion moments are generally not significant, unless there are a significant number of thermal transients or if there are stratification effects in the associated piping. By performing fatigue evaluations for the overlaid locations, the potential for adverse fatigue effects is evaluated and an appropriate inspection interval determined.

Fatigue Crack Growth

The potential for a flaw to grow from an initial flaw size to the allowable size for the overlay shall be evaluated by performing a crack growth analysis. The following steps are included:

- Determine the loading conditions that must be considered. The loadings considered in the original plant design, including any later changes, must be determined. For purposes of crack growth analysis, the number of cycles per heatup/cooldown cycle is established.

- Determine the applied stresses, including through-wall and circumferential distribution, at the weld overlay location for each loading condition. Stresses in both the hoop and axial direction must be quantified. This may include loads due to:

    - Pressure
    - Residual stresses
    - Bending moments due to dead weight, piping thermal expansion, nozzle anchor movement effects, seismic operating basis earthquake (OBE), and stratification, as applicable
    - Local thermal stratification, if applicable
    - Thermal transient through-wall stresses

- Characterize the initial flaw depth and aspect ratio. If the location is inspected using a PDI qualified examination and no flaws are detected prior to application of the weld

overlay, an initial circumferential flaw depth greater than or equal to 10 percent of the nominal pipe or nozzle thickness shall be assumed, with a length equal to the wall thickness (a/l = 0.1 aspect ratio flaw). An initial axial flaw greater than or equal to 10 percent of the pipe wall thickness with an aspect ratio (l/a) equal to the length of the Alloy 600 weld at the outside surface divided by the pipe wall thickness shall also be assumed.

- The fatigue crack growth law is based on Alloy 600 in the pressurized water reactor environment. Reference 15 indicates that the fatigue crack growth rate (FCGR) of Alloy 182 in the pressurized water reactor environment is a factor approximately 5 higher than that of Alloy 600 in air under the same loading conditions. The fatigue crack growth rate for Alloy 600 in air obtained from NUREG/CR-6443 is given by:

  $(da/dN)_{air} = C_{A600}\,(1-0.82R)^{-2.2}\,(\Delta K)^{4.1}$, units of m/cycle

  where:

  C_{A600} = $4.835\times10^{-14} + 1.622\times10^{-16}T - 1.49\times10^{-18}T^2 + 4.355\times10^{-21}T^3$
  T = temperature inside pipe, °C (taken as the maximum during the transient)

  R = R-ratio = (K_{min}/K_{max})
  ΔK = $K_{max} - K_{min}$ = range of stress intensity factor, Mpa-$m^{0.5}$

  Note that a factor of 5 shall be applied to this equation to account for the pressurized water reactor environment in accordance with reference 15. Also, note that crack growth rate in accordance with reference 15 is independent of rise time of the transient.

- Crack growth analysis is then conducted on a cycle-by-cycle basis for a period equal to the standard ASME Code Section XI inspection interval (ten years) or to end of life, including license renewal period where applicable. If the crack growth analysis is performed for a calculation period shorter than the end of life, then inservice inspections must be performed at an interval no greater than that evaluation period.

- If a flaw is detected in either pre- or post-overlay inspections that is greater than the initial flaw sizes specified above for fatigue crack growth calculations, then the calculations must address the actual depths observed, in addition to the assumed flaw depths.

The allowable end-of-evaluation period flaw size is that considered in the design basis for structural sizing of the weld overlay. If the crack growth analysis shows that fatigue crack growth does not grow a flaw to the design basis depth prior to the end of life, the ASME Code Section XI inspection requirements shall be used for subsequent inservice inspections (after any intermediate inspections imposed by MRP-139, as discussed in Section A1.9 below). If the crack growth analysis shows that the crack grows to the allowable flaw size, then the inspection interval must be decreased to no greater than the time interval predicted for the flaw to reach the allowable flaw size.

Fatigue Usage Evaluation

The fatigue usage at optimized weld overlay locations may be increased due to addition of the weld overlay since the through-wall thermal stresses may be increased (greater thickness) and there will be structural discontinuities at the weld overlay to piping and nozzle transitions. To assess this potential, a fatigue usage analysis shall be conducted for regions of the overlay remote from the observed or assumed crack using the applicable rules of ASME Code Section III for Class 1 components (NB-3600 for piping and NB-3200 for vessel nozzles). Code Editions and Addenda later than the original Construction Code may be used, as allowed by ASME Code Section XI, Appendix L.

A1.5 Leak-Before-Break

Leak-before-break (LBB) analyses evaluate postulated flaw growth in the primary loop piping of the reactor coolant system. There are existing reports that provide the technical basis for eliminating large primary loop pipe rupture as the structural design basis for Davis-Besse. However, the current technical basis for regulatory approval of LBB applications does not provide for evaluation of active degradation mechanisms other than fatigue and thus is at odds with recent operating experience with primary water stress corrosion cracking and the actions being taken to mitigate and manage its effects. Consequently, efforts are underway within the NRC and EPRI to develop a more robust technical basis for determining that "...the probability of fluid system piping rupture is extremely low under conditions consistent with the design basis for the piping."

The original LBB calculations for Davis-Besse will be updated with an evaluation demonstrating that due to the efficacy of the overlay for primary water stress corrosion cracking mitigation, concerns for original weld susceptibility to cracking have been resolved. Critical crack sizes and leakage shall be evaluated with the weld overlay in place, including the effects of crack morphology, to demonstrate that margins exist for detection of leakage from one-half critical flaw sizes. The effects of the mitigation on the leak-before-break analysis shall be evaluated to show the effects of application of weld overlays do not invalidate the conclusions of the existing design basis.

A1.6 Evaluation of Weld Overlay Effects on Piping System

Stresses may develop in other locations of a piping system due to the weld shrinkage at the overlays. These stresses are system wide, and similar in nature to restrained free end thermal expansion or contraction stresses. The level of stresses resulting from weld overlay shrinkage depends upon the amount of shrinkage that occurs and the piping system geometry (that is, its stiffness). Overlay weld shrinkage may also produce displacements at locations in the system such as pipe hangers and pipe whip restraints that need to be checked against design tolerances. Finally, the added mass and stiffness produced by the weld overlay may have an effect on the dynamic response characteristics of the system.

To address these effects, the following actions shall be taken following application of a weld overlay:

1. *Measurement of Weld Overlay Shrinkage* - Punch marks shall be applied at several azimuthal locations on the piping and/or nozzles, beyond the ends of the overlays, and the distance measured between those punch marks before and after application of the overlays.

2. *Evaluation of Shrinkage Stresses* - The stresses due to the measured shrinkage shall then be evaluated via a piping model, or other evaluation means. Although there are no directly applicable ASME Code Section III stress limits that apply to such sustained secondary stresses, a guideline is to compare them to the primary plus secondary stress limit. Such stresses may also affect primary water stress corrosion cracking crack growth evaluations of other susceptible welds in the system (with or without weld overlays).

3. *System Walk Downs* - Due to displacements produced by weld overlay shrinkage in the piping system, it is also required that, after application of the overlay, a walk-down be performed to check supports to verify tolerances.

4. *Evaluation of Mass and Stiffness Effects* - The mass added to the piping systems by the weld overlay and the effect of the overlay on piping system stiffness shall also be evaluated, based on as-built dimensions, to determine if they have any significant effects on dynamic analyses of the system.

Details of the specific overlay design and analysis requirements for the Davis-Besse reactor vessel reactor coolant pump dissimilar metal welds are itemized in Attachment 2, Section A2.2.

A1.7 Weld Overlay Inspection

Inspections of weld overlays of pressurized water reactor system butt welds involve two aspects. One is the type of examination and the other is the required interval. The examinations to be applied to the Davis-Besse reactor coolant pump dissimilar metal weld overlays are discussed in the following sections and the detailed requirements are itemized in Attachment 2, Section A2.3.

A1.8 Types of Examination for Weld Overlays

Requirements for the type of examinations and associated examination volumes for full structural weld overlays are defined in ASME Code Section XI, Appendix Q and ASME Code Cases N-504-3 and N-740-2.

These requirements are consistent with current PDI techniques and were originally developed for weld overlay repairs of intergranular stress corrosion cracking (IGSCC) in boiling water reactor stainless steel welds, where the initiating flaws are fully characterized with respect to length and depth. Since the full structural weld overlay designs for these repairs assumed that the original flaw is completely through the original pipe wall, inspection of the outer 25 percent of the original pipe wall along with the weld overlay is specified for preservice and subsequent inservice examinations, such that it provides some advance warning if flaws were to unexpectedly propagate into that region, before they violate the overlay design basis. Also, the ultrasonic examination technology available at the time ASME Code Case N-504 was issued could reliably support examinations of the outer 25 percent of the original pipe wall.

However, for optimized weld overlays where the weld overlay design assumes the existence of a circumferential flaw 75 percent through the original wall thickness, it is desired to provide a similar "advance warning" examination volume for the unlikely event that a flaw would initiate and begin propagating after application of the overlay. For this design assumption, examination coverage for weld overlay preservice inspections and subsequent inservice inspections are increased to include the thickness of the weld overlay plus the outer 50 percent of the original pipe wall thickness. This provides additional margin to account for the uncertainty regarding the pre-weld overlay status of the original weld and is well within current ultrasonic examination

capabilities. For full structural preemptive weld overlays, where the weld overlay design assumes the existence of a flaw 100 percent through the original pipe wall, inspection of the outer 25 percent of the original pipe wall along with the weld overlay shall continue to be the requirement. Details of the examination requirements and exam volumes for optimized weld overlays are provided in Figures A2-1 and A2-2 of Attachment 2. These are consistent with the current requirements for full structural weld overlays (ASME Code Section XI Appendix Q and ASME Code Cases, N-504-3 and N-740-2) and the expanded exam volume requirement for optimized weld overlays described in MRP-169 [reference 8].

As discussed above, weld overlays must conform to the rules in the ASME Code Section XI for welds in piping that require the procedures, equipment, and personnel to be qualified by a performance demonstration in accordance with Appendix VIII, as amended in 10 CFR 50.55a. Currently, FENOC uses the PDI qualification process to satisfy these requirements. Procedures, equipment, and personnel used for examination of preemptive weld overlays at Davis-Besse shall be qualified in accordance with the PDI process. Currently, Section XI Appendix VIII only includes qualification requirements for full structural weld overlays (Supplement 11). Attachment 2 to this 10 CFR 50.55a Request contains a description of the essentially equivalent PDI qualification program that is being used to qualify optimized weld overlay examinations.

A1.9 Inspection Interval and Sample Size for Preemptive Weld Overlays

The inservice inspection interval and sample size for IGSCC mitigating weld overlays in boiling water reactor weldments are defined in NUREG-0313, which defines examination requirements in terms of the category of intergranular stress corrosion cracking susceptible weldment. The categories of weldments are based on 1) the IGSCC resistance of the materials in the original weldment, 2) whether or not stress improvement (or overlay) has been performed on the original weldment, 3) whether or not a post stress improvement ultrasonic examination has been performed, 4) the existence (or not) of cracking in the original weldment, and 5) the likelihood of undetected cracking in the original weldment prior to the application of the overlay. The categories range from A through G, with the higher letter categories requiring augmented inspection intervals and/or sample size. Category A is the lowest category, consisting of piping that has been replaced (or originally fabricated) with intergranular stress corrosion cracking resistant material.

The EPRI Materials Reliability Program (MRP) Primary System Piping Butt Weld Inspection and Evaluation Guidelines (MRP-139) utilize a similar classification scheme [reference 16]. Specifically, in accordance with MRP-139, primary water stress corrosion cracking susceptible weldments with no known cracks (based on examination) that have been reinforced by a full structural weld overlay made of primary water stress corrosion cracking resistant material are designated Category B. Primary water stress corrosion cracking susceptible weldments that contain known cracks that have been repaired by a full structural weld overlay are designated Category F.

For overlay applications in which a pre-overlay examination is performed and no primary water stress corrosion cracking-like indications are detected, the absence of cracking in the original weldment, the structural reinforcement and resistant material supplied by the overlay, the residual stress improvement provided by the overlay, and the requirement to do a PDI qualified examination immediately following application of the overlay are deemed to be consistent with MRP-139 Category B for either full structural or optimized weld overlays. Therefore the following requirements for subsequent inservice inspections shall be satisfied:

1. For primary water stress corrosion cracking susceptible weldments for which an inservice inspection is performed in accordance with ASME Code Section XI, Appendix VIII, Supplement 10 [reference 4] immediately prior to application of the overlay, and such inservice inspection demonstrates the weld to be absent of any flaws or crack-like indications, future in-service inspections of the welds shall be performed at intervals consistent with current ASME Code Section XI requirements. This requirement is consistent with MRP-139 Category B, except that it is independent of whether the overlay is a full structural or optimized weld overlay.

2. For primary water stress corrosion cracking susceptible weldments for which an inservice inspection in accordance with ASME Code Section XI, Appendix VIII, Supplement 10 [reference 4] is not performed immediately prior to application of the overlay, or in which flaws or crack-like indications are detected, the weldment shall be assumed to be cracked. In such cases, future inservice inspections shall be performed consistent with requirements for cracked, weld overlay repaired weldments (MRP-139 Category F). After the weld overlay and initial post-overlay examination, such weldments shall be inspected once in the next five years. If no new indications are seen or if no growth of existing indications is observed in the examination volume, the inspection interval shall revert to the existing ASME Code program.

3. In any case, if a post-overlay pre-service or inservice inspection detects a planar flaw in the weld overlay examination volume (Figure A2-2), it shall be addressed in the crack growth analyses described in Sections A1.2 and A1.4. If the flaw is found acceptable, the weld overlay examination volume shall be reexamined during the first or second refueling outage following discovery of the flaw.

A1.10 Dissimilar Metal Weld Examination Requirements

The current requirements for inservice inspection of dissimilar metal welds (greater than 4 inches nominal pipe size) are defined in ASME Code Section XI and summarized as follows:

Initial Preservice and Subsequent Inservice Inspections:

Surface: Liquid penetrant examination of weld and heat affected zone surfaces
Volumetric: Ultrasonic examination of inner 33 percent of original weld and heat affected zone

Requirements for the inspection interval and sample size for dissimilar metal welds are defined in ASME Code Section XI as 100 percent of welds inspected every ten years (Category B-F or B-J Note (1)(c)).

As noted above, the Materials Reliability Program (MRP), sponsored by EPRI, has issued MRP-139 containing guidelines requiring augmented examinations for primary water stress corrosion cracking susceptible butt welds that are similar in concept to the NUREG-0313 requirements for boiling water reactor intergranular stress corrosion cracking susceptible welds. These guidelines are not repeated here, but involve inspections as often as once every inspection period (3 1/3 years) for unmitigated welds in higher temperature locations of the reactor coolant system (for example, pressurizer and hot leg nozzles).

REQUIREMENTS APPLICABLE TO DAVIS-BESSE NOZZLE WELD OVERLAYS

FENOC proposes to use the following detailed requirements for the design, analysis, fabrication, examination, and pressure testing of the Davis-Besse reactor coolant pump dissimilar metal weld overlays. These requirements, which are derived from applicable portions of ASME Code Case N-740-2 [reference 6], MRP-169 Rev. 1 [reference 8] and MRP-139 [reference 16], provide an acceptable methodology for reducing potential defects in these austenitic nickel alloy welds to an acceptable size or mitigating the potential for future primary water stress corrosion cracking by increasing the wall thickness through deposition of weld overlays. The weld overlays shall be applied by deposition of weld reinforcement (weld overlay) on the outside surface of the piping, nozzles, and associated dissimilar metal welds, including ferritic materials when necessary, in accordance with the following:

Prior to application of the optimized weld overlay, a pre-overlay ultrasonic examination of the dissimilar metal Alloy 82/182 weld will be performed. FENOC may apply an optimized weld overlay to the dissimilar metal Alloy 82/182 weld for flaws that meet the size and location criteria detailed in Section A2.2.

A2.1 MATERIALS AND WELDING REQUIREMENTS

(a) An optimized weld overlay shall be applied by deposition of weld reinforcement (weld overlay) on the outside surface of circumferential welds. This proposed method applies to austenitic nickel alloy and austenitic stainless steel welds between the following:

P-No. 8 or P-No. 43 and P-Nos. 1, 3, 12A, 12B, or 12C[5]
P-No. 8 and P-No. 43
Between P-Nos. 1, 3, 12A, 12B, and 12C materials

(b) If a weld overlay on any of the material combinations in A2.1(a) obstructs a required examination of an adjacent P-No. 8 to P-No. 8 weld, the overlay may be extended to include overlaying the adjacent weld.

(c) Weld overlay filler metal shall be nickel alloy (28 percent chromium minimum, ERNiCrFe-7/7A) meeting the requirements of A2.1(e) below applied 360 degrees around the circumference of the item and deposited using a Welding Procedure Specification (WPS) for groove welding, qualified in accordance with the Construction Code and Owner's Requirements identified in the Repair/Replacement Plan. As an alternative to the postweld heat treatment requirements of the Construction Code and Owner's requirements, ambient-temperature temper bead welding in accordance with Attachment 3 shall be used.

(d) Prior to deposition of the weld overlay, the surface to be weld overlaid shall be examined using the liquid penetrant method. Indications with major dimension greater than 1/16 inch (1.5 millimeters) shall be removed, reduced in size, or weld repaired in accordance with the following requirements.

(1) One or more layers of weld metal shall be applied to seal unacceptable indications in the area to be repaired with or without excavation. The thickness of these layers shall not be used in

[5] P- Nos. 12A, 12B, and 12C designations refer to specific material classifications originally identified in ASME Code Section III and subsequently reclassified in a later Edition of ASME Code Section IX.

meeting weld reinforcement design thickness requirements. Peening the unacceptable indication prior to welding is permitted.

(2) If weld repair of indications identified in A2.1(d) is required, the area where the weld overlay is to be deposited, including any local weld repairs or initial weld overlay layer, shall be examined by the liquid penetrant method. The area shall contain no indications with major dimension greater than 1/16 inch (1.5 millimeters) prior to application of the structural layers of the weld overlay.

(3) To reduce the potential of hot cracking when applying an austenitic nickel alloy over P-No. 8 base metal, it is permissible to apply a layer or multiple buffer (transitional) layers of austenitic stainless steel filler material metal over the austenitic stainless steel base metal. The stainless steel filler metal shall have a delta ferrite content of 5 – 15 Ferrite Number (FN) as reported on the Certified Material Test Report (CMTR). The thickness of these buffer layers shall not be used in meeting weld reinforcement design thickness requirements.

(e) Weld overlay deposits shall meet the following requirements:

The austenitic nickel alloy weld overlay shall consist of at least two weld layers deposited using a filler material with a chromium (Cr) content of at least 28 percent. The first layer of weld metal deposited may not be credited toward the required thickness except that a first diluted layer may be credited toward the required thickness, provided the portion of the layer over the austenitic base material, austenitic filler material weld, and the associated dilution zone from an adjacent ferritic base material contain at least 24 percent Cr, and the Cr content of the deposited weld metal is determined by chemical analysis of the production weld or of a representative coupon taken from a mockup prepared in accordance with the WPS for the production weld. Downhill welding shall not be permitted for deposition of any layer.

(f) This proposed method is only for welding in applications predicted not to have exceeded fast neutron (E >1 MeV) fluence of 1×10^{17} neutrons per square centimeter prior to welding.

(g) A new weld overlay shall not be installed over the top of an existing weld overlay that has been degraded in service.

A2.2 DESIGN AND ANALYSIS REQUIREMENTS

Structural Sizing

OWOL - For an optimized weld overlay (OWOL), the overlay must meet the same ASME Code Section XI, Division 1, Class 1 rules for allowable flaw sizes in austenitic piping (Paragraph IWB-3640). In addition, FENOC is applying more conservative axial flaw size requirements due to limitations in ultrasonic examination procedures.

1) Circumferential flaws: For determining the OWOL thickness, a circumferential flaw shall be assumed to be 50 percent through the original wall thickness of the item for the entire circumference. Flaws identified during the pre-overlay inspection will be characterized per ASME IWA-3300 and evaluated per the acceptance standards of ASME IWB-3500. Flaws located entirely within the inner 50 percent of the original dissimilar metal weld wall thickness may be repaired with an OWOL. A flaw greater than 50 percent through-wall will be repaired with an FSWOL. Flaws that are not greater than 50 percent through-wall, but that

extend into the outer 50 percent of the original dissimilar metal weld wall thickness, must be repaired with an FSWOL; for such flaws, the evaluation procedures of ASME IWB-3640 will not be applied.

2) Axial flaws: For determining the OWOL thickness, an axial flaw shall be assumed to be 75 percent through the original wall thickness of the item for the entire axial length of the dissimilar metal weld or PWSCC susceptible material, as applicable. Flaws identified during the pre-overlay inspection will be characterized per ASME IWA-3300 and evaluated per the acceptance standards of ASME IWB-3500. Flaws located entirely within the inner 50 percent of the original dissimilar metal weld wall thickness may be repaired with an OWOL. Axial flaws less than 75 percent through-wall will be evaluated using ASME IWB-3500 to determine if an OWOL can be applied. Flaws that are not greater than 75 percent through-wall, but extend into the outer 25 percent of the original dissimilar metal weld wall thickness, must be repaired with an FSWOL; for such flaws, the evaluation procedures of ASME IWB-3640 will not be applied.

3) For mitigative optimized overlays, the assumed inside surface connected flaw in the underlying base material or weld shall be based on the limiting case of the two below:
   (a) 75 percent through-wall for the entire circumference
   (b) 75 percent through-wall for 1.5 inches or the combined width of the weld plus buttering, whichever is greater, in the axial direction

4) The overlay design thickness shall be verified, using only the weld overlay thickness conforming to the deposit analysis requirements of A2.1(e).

5) The optimized weld overlay design must also account for potential lower toughness/lower strength of the underlying base material and dissimilar metal weldment that is credited in the flaw evaluation (that is, the outer 25 percent of the original wall thickness of the item). References 9 through 11 provide an acceptable method for addressing this issue.

As ultrasonic examination procedures, qualified to the modified requirements of ASME Code Section XI, Appendix VIII, Supplement 11 are capable of detecting circumferential flaws in the upper 50 percent of the base material, but are only capable of detecting axial flaws in the upper 25 percent of the base material, the following will be included within the optimized weld overlay design requirements.

- A design requirement is added to show that ASME Code Section XI design criteria are met for a 100 percent through-wall axial flaw.
- An analysis of fatigue and primary water stress corrosion cracking crack growth must demonstrate that any growth shall not impair the ASME Code Section XI acceptance criteria (IWB-3640) for the optimized weld overlay at the end of the inspection interval.

ASME Code Case N-740-2 states that the axial length and end slope of the weld overlay must be sufficient to provide for load redistribution from the overlaid component to the weld overlay and back, such that applicable stress limits of NB-3200 are satisfied. It also states that the end transition slope of the overlay shall not exceed 30 degrees unless specifically analyzed to justify steeper slopes. ASME Code Section III stress analyses shall be performed to assure that the weld overlay length and end slope meet these requirements. These requirements are applicable to both full structural weld overlays and optimized weld overlays.
In addition to the overlay thickness calculated as described above, Paragraph IWB-3640 also contains the requirement that the flaw being evaluated not be greater than 0.75t, where t is the nominal wall thickness, including the weld overlay. An additional separate check is made to demonstrate that this requirement is

met for all sections within the primary water stress corrosion cracking susceptible material.

Residual Stress Analysis

Joint specific, overlay specific weld residual stress analyses shall be performed for each unique Davis-Besse reactor coolant pump dissimilar weld metal optimized weld overlay geometry. The residual stress analyses shall consider the heat efficiency factor associated with the actual welding process, thermal boundary conditions (wet or dry) and interpass temperature limits, and shall assume a conservative pre-overlay residual stress condition such as that which would result from an ID surface weld repair during construction. The acceptance criteria for such residual stress analysis are two-fold:

1. The resulting residual stresses on the inside surface over the entire length of primary water stress corrosion cracking susceptible material under the optimized weld overlay shall be less than or equal to 10,000 pounds per square inch tensile.

2. A separate primary water stress corrosion cracking crack growth criterion must also be satisfied to demonstrate that any flaws detected in the pre-overlay inspection, or that are not within the post-overlay exam volumes, shall not grow to exceed the applicable overlay design basis flaw size. Specifically, for an optimized weld overlay, this analysis must show that an assumed circumferential flaw no less than 50 percent (75 percent for an axial flaw) through the original wall thickness would not grow to exceed 75 percent through-wall (100 percent for an axial flaw). If actual flaw depths exceeding these initial flaw size assumptions are observed in any inspections, their actual depths must be considered in the analyses, in addition to the assumed flaw depths.

Fatigue Evaluation

Fatigue Crack Growth – Fatigue crack growth analyses shall be performed to demonstrate that the assumed flaw sizes specified above for primary water stress corrosion cracking analysis shall not exceed the overlay design basis flaw size in the period until the next scheduled inservice inspection. If actual flaw depths exceeding these initial flaw size assumptions are observed in any inspections, their actual depths must be considered in the analyses, in addition to the assumed flaw depths.

The allowable end-of-evaluation period flaw size is that considered in the design basis for structural sizing of the weld overlay. If the fatigue crack growth analysis shows that the assumed flaw shall not grow to the design basis depth for the normal ASME Code Section XI inspection interval or greater, then the Section XI ten-year interval is justified for subsequent inservice inspections. If the crack growth analysis shows that the crack grows to the allowable flaw size, then the inspection interval must be decreased to no greater than the time interval predicted for the flaw to reach the allowable flaw size. Detailed future inservice inspection requirements for the overlaid item are specified in Section A2.3.

Fatigue Usage Factor – The fatigue usage analysis of the weld overlay, other than at the assumed crack location, shall be conducted using the applicable rules of ASME Code Section III for Class 1 components (NB-3600 for piping and NB-3200 for vessel nozzles). ASME Code Editions and Addenda later than the original Construction Code may be used for this evaluation, as allowed by ASME Code Section XI, Appendix L. (The assumed crack location is covered by the above fatigue crack growth evaluation.) The fatigue usage factor shall be calculated for the remaining plant lifetime, including license renewal period, where applicable.

Leak-Before-Break Evaluation

The plant-specific leak-before-break (LBB) analyses for Davis-Besse has been revised to address the effects of the weld overlay on LBB. The analysis demonstrates that the flaw size and leakage rate

margins specified in Standard Review Plan (SRP) Section 3.6.3 are met for the overlaid nozzle locations.

Effects on Piping System

The effects of any changes in applied loads or movements, as a result of weld shrinkage from the weld overlay, on other items in the piping system (for example, support loads and clearances, nozzle loads, and changes in system flexibility and weight due to the weld overlay) shall be evaluated. Existing flaws previously accepted by analytical evaluation shall be evaluated in accordance with Paragraph IWB-3640.

A2.3 EXAMINATION REQUIREMENTS

Ultrasonic examination procedures and personnel shall be qualified in accordance with the modified requirements to ASME Code Section XI, Appendix VIII, Supplement 11, as described in Attachment 5. The examination shall be performed to the maximum extent practicable, for axial and circumferential flaws. If 100 percent coverage of the required volume for axial flaws cannot be achieved, but essentially 100 percent coverage for circumferential flaws (100 percent of the susceptible volume) can be achieved, the examination for axial flaws shall be performed to achieve the maximum coverage practicable, with limitations noted in the examination report. The examination coverage requirements shall be considered to be met. For welds containing cast stainless steel materials the examination volume includes only the susceptible material (non-stainless steel) volume.

Weld Overlay Acceptance Examination

(1) The weld overlay shall have a surface finish of 250 micro-inches (μin) or 6.3 micrometers (μm) roughness measurement system (RMS) or better and contour that permits ultrasonic examination in accordance with procedures qualified in accordance with ASME Code Section XI, Appendix VIII. The weld overlay shall be inspected to verify acceptable configuration.

(2) The weld overlay and the adjacent base material for at least ½ inch (13 millimeters) from each side of the overlay shall be examined using the liquid penetrant method. The weld overlay shall satisfy the surface examination acceptance criteria for welds of the Construction Code or NB-5300. The adjacent base material shall satisfy the surface examination acceptance criteria for base material of the Construction Code or NB-2500. If ambient temperature temper bead welding is performed, the liquid penetrant examination of the completed weld overlay shall be conducted no sooner than 48 hours following completion of the three tempering layers over the ferritic steel.

(3) The examination volume A-B-C-D in Fig. A2-1(a) shall be ultrasonically examined to assure adequate fusion (that is, adequate bond) with the base material and to detect welding flaws, such as interbead lack of fusion, inclusions, or cracks. The interface C-D shown between the overlay and the weld includes the bond and heat-affected zone from the overlay. If ambient temperature temper bead welding is performed, the ultrasonic examination shall be conducted at least 48 hours following completion of the three tempering layers over the ferritic steel. Planar flaws detected in the weld overlay acceptance examination shall meet the preservice examination standards of Table IWB-3514-2. In applying the acceptance standards to planar indications, the thickness, t_1 or t_2, defined in Fig. A2-1(b), shall be used as the nominal wall thickness in Table IWB-3514-2, provided the base material beneath the flaw (that is, safe end, nozzle, or piping material) is not susceptible to stress corrosion cracking (SCC). For susceptible material, t_1 shall be used. If a flaw in the overlay crosses the boundary between the two regions, the more conservative of the two dimensions (t_1 or t_2) shall be used. Laminar flaws in the weld overlay shall meet the following requirements:

(a) The acceptance standards of Table IWB-3514-3 shall be met, with the additional limitation that the total laminar flaw shall not exceed 10 percent of the weld surface area, and that no linear dimension of the laminar flaw area shall exceed the greater of 3 inches (76 millimeters) or 10 percent of the pipe circumference.

(b) For examination volume A-B-C-D in Fig. A2-1(a), the reduction in coverage due to laminar flaws shall be less than 10 percent. The uninspectable volume is the volume in the weld overlay underneath the laminar flaws for which coverage cannot be achieved with the angle beam examination method.

(c) Any uninspectable volume in the weld overlay shall be assumed to contain the largest radial planar flaw that could exist within that volume. This assumed flaw shall meet the preservice examination acceptance standards of Table IWB-3514-2, with nominal wall thickness as defined above for planar flaws. Alternatively, the assumed flaw shall be evaluated and shall meet the requirements of Paragraphs IWB-3640, IWC-3640, and IWD-3640, as applicable. Both axial and circumferential planar flaws shall be assumed.

(4) After completion of all welding activities, VT-3 visual examination shall be performed on all affected restraints, supports, and snubbers, to verify that design tolerances are met.

Preservice and Inservice Inspection

Examination Requirements – In addition to the above overlay acceptance exam, the preservice and inservice examination volume identified in Figure A2-2 shall be inspected by techniques qualified in accordance with the modified requirements to ASME Code Section XI, Appendix VIII, Supplement 11 or its equivalent as described in Attachment 5.

Preservice Examination

(1) The examination volume in Fig. A2-2 shall be ultrasonically examined. The angle beam shall be directed perpendicular and parallel to the piping axis, with scanning performed in four directions, to locate and size any axial flaws that have propagated into the outer 25 percent of the base metal thickness, any circumferential flaws that have propagated into the outer 50 percent of the base metal thickness, or into the weld overlay.

(2) The preservice examination acceptance standards of IWB-3514 shall be met for the weld overlay. In applying the acceptance standards to planar indications, the thickness, t_1 or t_2, defined in Fig. A2-1(b) shall be used as the nominal wall thickness in IWB-3514, provided the base material beneath the flaw (that is, safe end, nozzle, or piping material) is not susceptible to SCC. For susceptible material, t_1 shall be used. Axial flaws in the outer 25 percent of the base metal thickness or circumferential flaws in the outer 50 percent of the base metal thickness shall meet the design analysis requirements of Section A2.2.

(3) The flaw evaluation requirements of IWB-3640, IWC-3640, or IWD-3640 shall not be applied to planar flaws, identified during preservice examination, that exceed the preservice examination acceptance standards of IWB-3514.

Inservice Examination

(1) The weld overlay examination shall be added to the inspection plan. The weld overlay inspection interval shall not be greater than the life of the overlay as determined in Section A2.2 above. All weld overlays shall be examined prior to the end of their design life.

(2) For welds whose pre-overlay examination, post-overlay acceptance examination, and preservice examination did not reveal any planar flaws, the examination volume in Fig. A2-2 shall be ultrasonically examined within 10 years following application of the optimized weld overlay. If multiple welds are mitigated in the same inspection period, examinations shall be spread throughout years 3 through 10 following application, similar to provisions in IWB-2412(b). Examinations volumes that show no indication of cracking shall be placed into a population to be examined once in a ten-year inspection interval.

(3) For welds whose pre-overlay examination, post overlay acceptance examination, or preservice examination, reveal planar flaws, the examination volume in Fig. A2-2 shall be ultrasonically examined once during the first or second refueling outage following application of the optimized weld overlay. Examination volumes that show no indication of crack growth or new cracking shall be placed into a population to be examined once in a ten-year inspection interval.

(4) The weld overlay examination volume in Fig. A2-2 shall be ultrasonically examined to determine if any new or existing planar flaws have propagated into the outer 50 percent of the base material thickness for circumferential flaws, or into the outer 25 percent of the base material thickness for axial flaws, or into the overlay. The angle beam shall be directed perpendicular and parallel to the piping axis, with scanning performed in four directions.

(5) The weld overlay shall meet the inservice examination acceptance standards of IWB-3514. In applying the acceptance standards to planar indications, the thickness, t_1 or t_2, defined in Fig. A2-1(b) shall be used as the nominal wall thickness in IWB-3514, provided the base material beneath the flaw (that is, safe end, nozzle, or piping material) is not susceptible to SCC. For susceptible material, t_1 shall be used. If the acceptance standards of IWB-3514 cannot be met, the weld overlay shall meet the acceptance standards of IWB-3600, IWC-3600, or IWD-3600, as applicable. If a planar circumferential flaw is detected in the outer 50 percent of the base material thickness or if a planar axial flaw is detected in the outer 25 percent of the base material thickness, it shall meet the design analysis requirements of A2.2. Any indication characterized as stress corrosion cracking in the weld overlay material is unacceptable.

(6) If inservice examinations reveal planar flaw growth, or new planar flaws, meeting the acceptance standards of IWB-3514, IWB-3600, IWC-3600, or IWB-3600, the weld overlay examination volume shall be reexamined during the first or second refueling outage following discovery of the growth or new flaws.

(7) For weld overlay examination volumes with unacceptable indication, the weld overlay and original defective weld shall be removed. A repair/replacement activity shall be performed in accordance with IWA-4000.

A2.4 PRESSURE TESTING

A system leakage test shall be performed in accordance with IWA-5000.

A2.5 DOCUMENTATION

Use of this proposed method shall be documented on Form NIS-2.

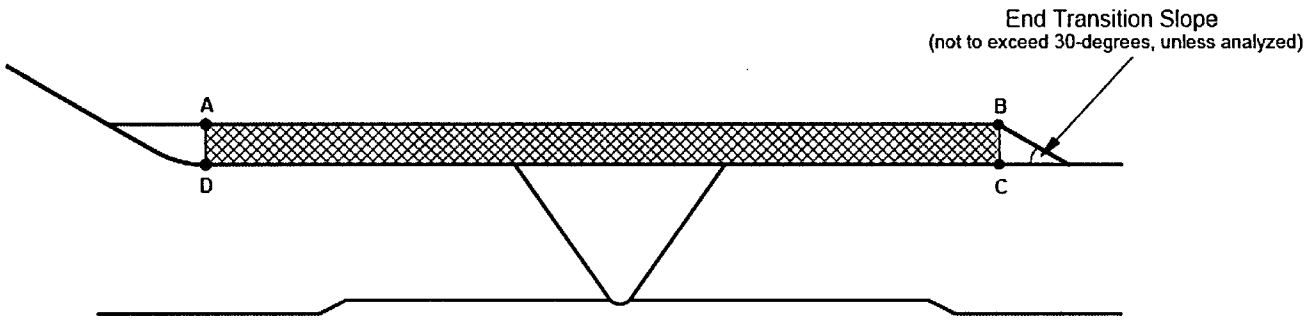

(a) Examination Volume A-B-C-D

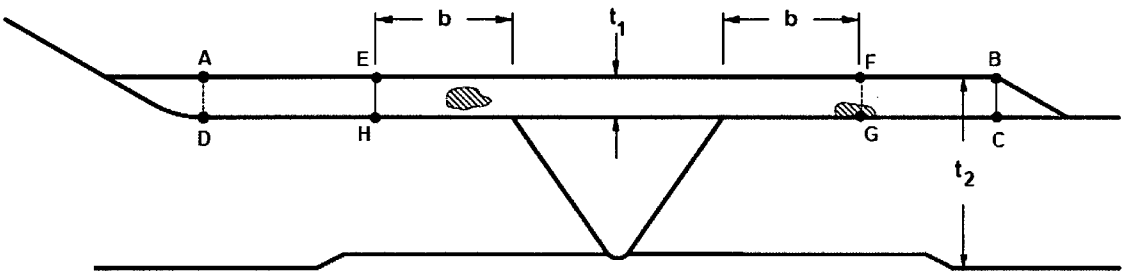

(b) Thickness (t_1 and t_2) for Table IWB-3514-2

Notes:

(a) Dimension b is equivalent to the nominal thickness of nozzle or pipe being overlaid, as appropriate.

(b) The nominal wall thickness is t_1 for flaws in E-F-G-H, and t_2 for flaws in A-E-H-D or F-B-C-G.

(c) For flaws that span two examination volumes (such as illustrated at F-G in the figure), the t_1 thickness shall be used.

(d) The weld includes the nozzle or safe end butter, where applied, plus any stress corrosion cracking susceptible base material in the nozzle.

Figure A2-1 Acceptance Examination Volume and Thickness Definitions

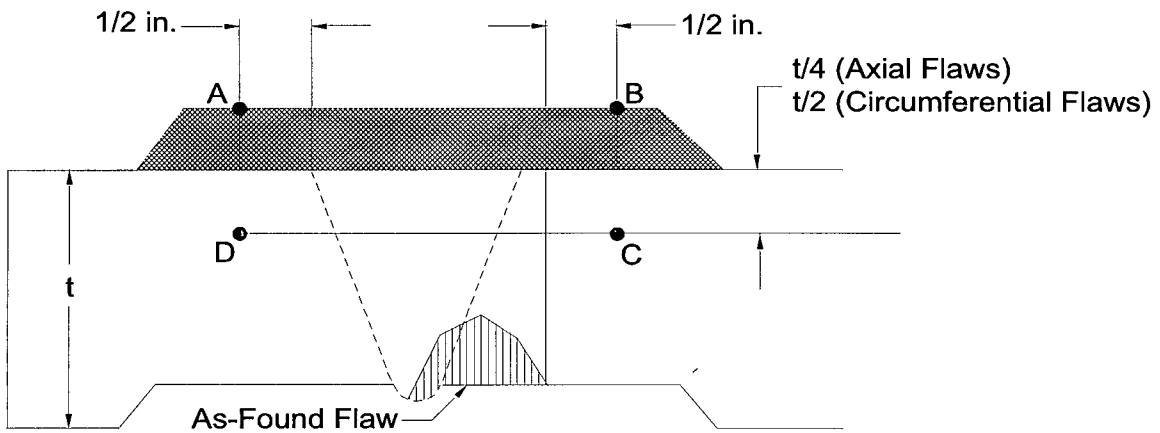

Optimized Weld Overlay
Preservice and Inservice Examination Volume A-B-C-D

Volumetric: Overlay directly over original primary water stress corrosion cracking susceptible weldment (including nozzle, buttering, dissimilar weld metal and primary water stress corrosion cracking susceptible safe-end if present) plus ½ inch beyond the as-found flaw and at least ½ inch beyond the toes of the original weld including weld-end butter, to a depth of the outer 50 percent for the detection of circumferential flaws and to a depth of the outer 25 percent for the detection of axial flaws of underlying material (A-B-C-D).

Figure A2-2 Preservice and Inservice Inspection Requirements for Weld Overlays

TEMPER BEAD WELDING REQUIREMENTS

A3-1 GENERAL REQUIREMENTS

(a) This Attachment applies to dissimilar austenitic filler metal welds between P-Nos. 1, 3, 12A, 12B, and 12C materials and their associated welds and welds joining P- No. 8 or 43 materials to P-Nos. 1, 3, 12A, 12B, and 12C materials with the following limitation. This Attachment shall not be used to repair SA-302 Grade B material unless the material has been modified to include from 0.4 percent to 1.0 percent nickel, quenching, tempering, and application of a fine grain practice.

(b) The maximum area of an individual weld overlay based on the finished surface over the ferritic base material shall be greater than 600 square inches (390,000 square millimeters), but less than 700 square inches (455,000 square millimeters).

(c) Repair/replacement activities on a dissimilar-metal weld in accordance with this Attachment are limited to those along the fusion line of a nonferritic weld to ferritic base material on which ⅛ inch (3 millimeters) or less of nonferritic weld deposit exists above the original fusion line.

(d) If a defect penetrates into the ferritic base material, repair of the base material, using a nonferritic weld filler material, may be performed in accordance with this Attachment, provided the depth of repair in the base material does not exceed ⅜ inch (10 millimeters).

(e) Prior to welding, the area to be welded and a band around the area of at least 1½ times the component thickness or 5 inches (130 millimeters), whichever is less, shall be at least 50 degrees Fahrenheit (10 degrees Celsius).

(f) Welding materials shall meet the Owner's Requirements and the Construction Code and Cases specified in the Repair/Replacement Plan. Welding materials shall be controlled so that they are identified as acceptable until consumed.

(g) Peening may be used, except on the initial and final layers.

A3-2 WELDING QUALIFICATIONS

The welding procedures and operators shall be qualified in accordance with ASME Code Section IX and the requirements of A3-2.1 and A3-2.2.

A3-2.1 Procedure Qualification

(b) The base materials for the welding procedure qualification shall be of the same P-Number and Group Number as the materials to be welded. The materials shall be postweld heat treated to at least the time and temperature that was applied to the materials being welded.

(c) The maximum interpass temperature for the first three layers of the test assembly shall be 150 degrees Fahrenheit (66 degrees Celsius).

(d) The weld overlay shall be qualified using groove weld coupon. The test assembly groove depth shall be at least 1 inch (25 millimeters). The test assembly thickness shall be at least twice the test assembly groove depth. The test assembly shall be large enough to permit removal of the required test specimens. The test assembly dimensions on either side of the groove shall be at least 6 inches (150 millimeters). The qualification test plate shall be prepared in accordance with Figure A3-1.

(e) Ferritic base material for the procedure qualification test shall meet the impact test requirements of the Construction Code and Owner's Requirements. If such requirements are not in the Construction Code and Owner's Requirements, the impact properties shall be determined by Charpy V-notch impact tests of the procedure qualification base material at or below the lowest service temperature of the item to be repaired. The location and orientation of the test specimens shall be similar to those required in A3-2.1(f) but shall be in the base metal.

(f) Charpy V-notch tests of the ferritic heat-affected zone (HAZ) shall be performed at the same temperature as the base metal test of A3-2.1(d). Number, location, and orientation of test specimens shall be as follows:

(1) The specimens shall be removed from a location as near as practical to a depth of one half the thickness of the deposited weld metal. The coupons for HAZ impact specimens shall be taken transverse to the axis of the weld and etched to define the HAZ. The notch of the Charpy V-notch specimen shall be cut approximately normal to the material surface in such a manner as to include as much of the heat affected zone as possible in the resulting fracture.

(2) If the material thickness permits, the axis of a specimen shall be inclined to allow the root of the notch to be aligned parallel to the fusion line.

(3) If the test material is in the form of a plate or forging, the axis of the weld shall be oriented parallel to the principal direction of rolling or forging.

(4) The Charpy V-notch test shall be performed in accordance with SA-370. Specimens shall be in accordance with SA-370, Figure 11, Type A. The test shall consist of a set of three full-size 10 millimeters by 10 millimeters specimens. The lateral expansion, percent shear, absorbed energy, test temperature, orientation, and location of all test specimens shall be reported in the Procedure Qualification Record.

(g) The average lateral expansion value of the three HAZ Charpy V-notch specimens shall be equal to or greater than the average lateral expansion value of the three unaffected base metal specimens. However, if the average lateral expansion value of the HAZ Charpy V-notch specimens is less than the average value for the unaffected base metal specimens and the procedure qualification meets all other requirements of this Attachment, either of the following shall be performed:

(1) The welding procedure shall be requalified.

(2) An Adjustment Temperature for the procedure qualification shall be determined in accordance with the applicable provisions of Paragraph NB-4335.2 of ASME Code Section III, 2001 Edition with the 2002 Addenda. The reference nil-ductility temperature (RT_{NDT}) or lowest service temperature of the materials for which the welding procedure will be used shall be increased by a temperature equivalent to that of the Adjustment Temperature.

A3-2.2 Performance Qualification

Welding operators shall be qualified in accordance with ASME Code Section IX.

A3-3 WELDING PROCEDURE REQUIREMENTS

The welding procedure shall include the following requirements:

(a) The weld metal shall be deposited by the automatic or machine gas tungsten arc welding process.

(b) Dissimilar metal welds shall be made using A-No. 8 weld metal (QW-442) for P-No. 8 to P-No. 1, 3,

or 12 (A, B, or C) weld joints or F-No. 43 weld metal (QW-432) for P-No. 8 or 43 to P-No. 1, 3, or 12 (A, B, or C) weld joints.

(c) The area to be welded shall be buttered with a deposit of at least three layers to achieve at least 1/8 inch (3 millimeters) overlay thickness with the heat input for each layer controlled to within ±10 percent of that used in the procedure qualification test. The heat input of the first three layers shall not exceed 45 kilojoule/inch (1.8 kJ/millimeter) under any conditions. Particular care shall be taken in the placement of the weld layers of the austenitic overlay filler material at the toe of the overlay to ensure that the heat affected zone and ferritic base metal are tempered. Subsequent layers shall be deposited with a heat input not exceeding that used for layers beyond the third layer in the procedure qualification.

(d) The maximum interpass temperature for field applications shall be 350 degrees Fahrenheit (180 degrees Celsius) for all weld layers regardless of the interpass temperature used during qualification. The interpass temperature limitation of QW-406.3 need not be applied.

(e) The interpass temperature shall be determined as follows:

(1) temperature measurement (for example, pyrometers, temperature-indicating crayons, and thermocouples) during welding. If direct measurement is impractical, interpass temperature shall be determined in accordance with A3-3(e)(2) or (3).

(2) heat-flow calculations, using at least the variables listed below

(a) welding heat input
(b) initial base material temperature
(c) configuration, thickness, and mass of the item being welded
(d) thermal conductivity and diffusivity of the materials being welded
(e) arc time per weld pass and delay time between each pass
(f) arc time to complete the weld

(3) measurement of the maximum interpass temperature on a test coupon that is no thicker than the item to be welded. The maximum heat input of the welding procedure shall be used in welding the test coupon.

(f) Particular care shall be given to ensure that the weld region is free of all potential sources of hydrogen. The surfaces to be welded, filler metals, and shielding gas shall be suitably controlled.

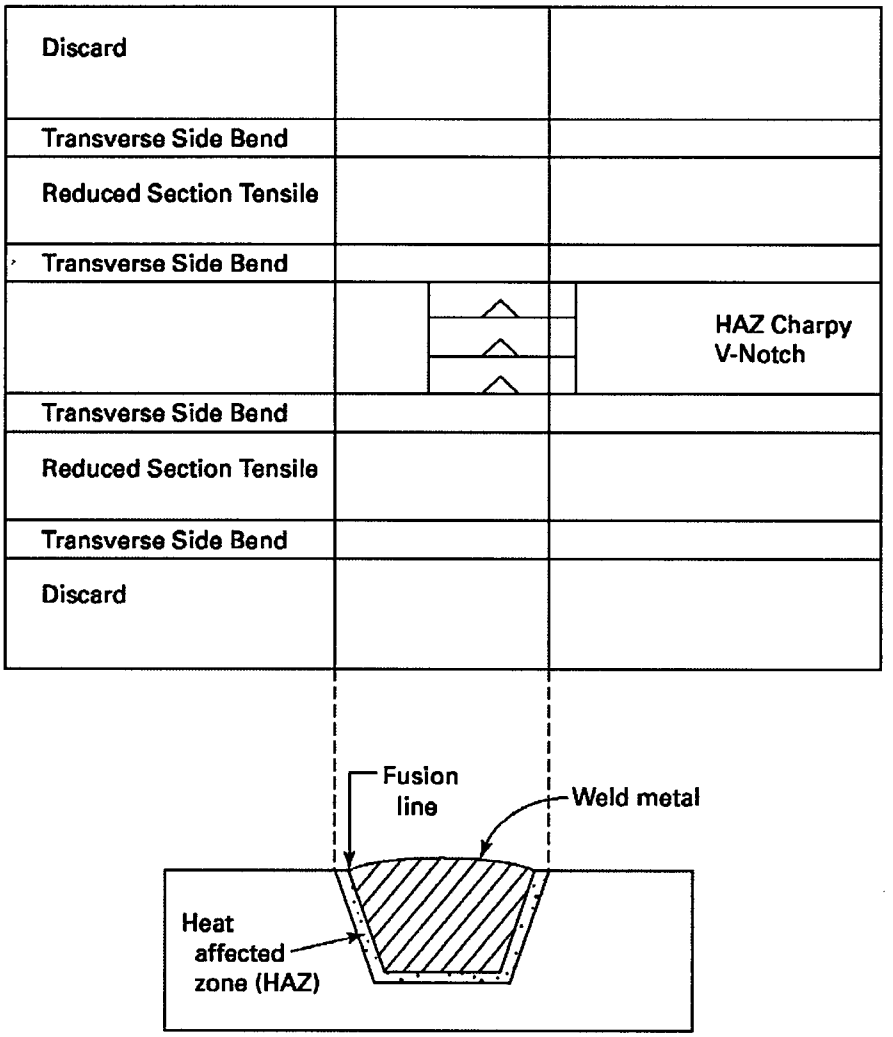

Note:
Base metal Charpy impact specimens are not shown. This figure illustrates a similar-metal weld.

Figure A3-1 Qualification Test Plate

COMPARISON OF ASME CODE CASE N-504-3 AND APPENDIX Q OF ASME CODE SECTION XI WITH THE PROPOSED ALTERNATIVE OF ATTACHMENTS 1, 2 AND 3 FOR WELD OVERLAY

Code Case N-504-3 and Appendix Q of ASME Code Section XI	Proposed Alternative of Attachments 1, 2, and3
Code Case N-504-3 provides requirements for reducing a defect to a flaw of acceptable size by deposition of weld reinforcement (weld overlay) on the outside surface of the pipe using austenitic stainless steel filler metal as an alternative to defect removal. Code Case N-504-3 is applicable to austenitic stainless steel piping only. According to Regulatory Guide 1.147, the provisions of Nonmandatory Appendix Q of ASME Code Section XI must also be met when using this Case. Therefore, the Code Case N-504-3 requirements presented below have been supplemented by Appendix Q of ASME Code Section XI.	The proposed alternative of Attachments 1, 2 and 3 provides requirements for installing a repair preemptive optimized weld overlay by deposition of weld reinforcement (weld overlay) on the outside surface of the item using Nickel Alloy 52M filler metal. Attachment 2 is applicable to dissimilar metal welds associated with nickel alloy materials. The proposed alternative of Attachment 2 is based on Code Case N-740-2.
General Requirements	General Requirements
Code Case N-504-3 and Appendix Q are only applicable to P-No. 8 austenitic stainless steels.	As specified in paragraph A2.1(a), the proposed alternative is applicable to dissimilar metal 82/182 welds joining P-No. 3 to P-No. 8 or 43 materials and P-No. 8 to P-No. 43 materials. It is also applicable to austenitic stainless steel welds joining P-No. 8 materials. *Basis: Code Case N-504-3 and Appendix Q are applicable to austenitic weld overlays of P-No. 8 austenitic stainless steel materials. Based on Code Case N-740-2, the proposed alternative of Attachment 2 was specifically written to address the application of weld overlays over dissimilar metal welds and austenitic stainless steel welds.*
According to paragraph (b) of Code Case N-504-3 as supplemented by Appendix Q, weld overlay filler metal shall be low carbon (0.035 percent maximum) austenitic stainless steel applied 360 degrees around the circumference of the pipe, and shall be deposited using a Welding Procedure Specification for groove welding, qualified in accordance with the Construction Code and Owner's Requirements and identified in the Repair/Replacement Plan.	The weld filler metal and procedure requirements of paragraph A2.1(b) are equivalent to Code Case N-504-3 and Appendix Q except as noted below: • Weld overlay filler metal shall be austenitic nickel Alloy 52M (ERNiCrFe-7A) filler metal which has a chromium content of at least 28 percent. If a stainless steel buffer layer is used as permitted by N-740-2, the ferrite content of the filler material shall be 5 - 15FN as required by the Construction Code. As an alternative to post-weld heat treatment, the provisions for "Ambient Temperature Temper Bead Welding" may be used on the ferritic nozzle as described in Attachment 3.

	Basis: The weld overlay shall be deposited with ERNiCrFe-7A (Alloy 52M) filler metal. It has been included into ASME Code Section IX as F-No. 43 filler metals. Containing 28.0 - 31.5 percent chromium (roughly twice the chromium content of 82/182 filler metal), this filler metal has excellent resistance to primary water stress corrosion cracking. This point has been clearly documented in EPRI Technical Report MRP-115, Section 2.2. Regarding the WPS, the requirements of Attachments 2 and 3 provide clarification that the WPS used for depositing weld overlays must be qualified as a groove welding procedure to ensure that mechanical properties of the WPS are appropriately established. Where welding is performed on ferritic nozzles, an ambient temperature temper bead WPS shall be used. Suitability of an ambient temperature temper bead WPS is addressed in Section 5 of this Request
According to paragraph (e) of Code Case N-504-3 as supplemented by Appendix Q, the weld reinforcement shall consist of at least two weld layers having as-deposited delta ferrite content of at least 7.5 FN. The first layer of weld metal with delta ferrite content of at least 7.5 FN shall constitute the first layer of the weld reinforcement that may be credited toward the required thickness. Alternatively, first layers of at least 5 FN provided the carbon content is determined by chemical analysis to be less than 0.02 percent.	The weld overlay described in Attachments 1 and 2 is deposited using nickel alloy 52M filler metal instead of austenitic stainless steel filler metals. Therefore, the basis for crediting the first layer towards the required design thickness shall be based on the chromium content of the nickel alloy filler metal. According to paragraph A2.1(e), the first layer of nickel alloy 52M deposited weld metal may be credited toward the required thickness provided the portion of the layer over the austenitic base material, austenitic weld, and the associated dilution zone from an adjacent ferritic base material contains at least 24 percent chromium. The chromium content of the deposited weld metal may be determined by chemical analysis of the production weld or from a representative coupon taken from a mockup prepared in accordance with the WPS for the production weld. *Basis: The weld overlay shall be deposited with ERNiCrFe-7A (Alloy 52M) filler metal. Credit for the first weld layer may not be taken toward the required thickness unless it has been shown to contain at least 24 percent chromium. This is a sufficient amount of chromium to prevent primary water stress corrosion cracking. Section 2.2 of EPRI Technical Report MRP-115 states the following: "The only well explored effect of the compositional differences among the weld alloys on primary water stress corrosion cracking is the influence of chromium. Buisine, et al. (Reference 24) evaluated the primary water stress corrosion cracking resistance of nickel-based weld metals with various chromium contents ranging from about 15 percent to 30 percent chromium. Testing was performed in doped steam and primary water. Alloy 182, with about 14.5 percent chromium, was the most susceptible. Alloy 82 with 18-20 percent chromium took three or four times longer to crack. For*

	chromium contents between 21 and 22 percent, no stress corrosion crack initiation was observed ... "
Design and Crack Growth Considerations	Design and Crack Growth Considerations
The design and flaw characterization provisions of Code Case N504-3, paragraphs (f) and (g) as supplemented by Appendix Q are summarized below: (i) Flaw characterization and evaluation are based on the as-found flaw. Flaw evaluation of the existing flaws is based on IWB3640 for the design life. • Multiple circumferential flaws shall be treated as one flaw of length equal to the sum of the lengths of the individual flaws. • Circumferential flaws are postulated as 100 percent through-wall for the entire circumference with one exception. When the combined length of circumferential flaws does not exceed 10 percent of the circumference, the flaws are only assumed to be 100 percent through-wall for the combined length of the flaws. • For axial flaws 1.5 inches or longer, or for five or more axial flaws of any length, the flaws shall be assumed to be 100 percent through-wall for the axial length of the flaw and entire circumference of the pipe. (ii) For four or fewer axial flaws less than 1.5 inches in length, the weld overlay thickness need only consist of two or more layers of weld metal meeting the deposit analysis requirements. (iii) The axial length and end slope of the weld overlay shall cover the weld and HAZs on each side of the weld, and shall provide for load redistribution from the item into the weld overlay and back into the item without violating applicable stress limits of the Construction Code. Any laminar flaws in the weld overlay shall be evaluated in the analysis to ensure that load redistribution complies with the above. These requirements are usually met if the weld overlay extends beyond the projected flaw by at least $0.75(Rt)^{1/2}$. (iv) Unless specifically analyzed, the end transition slope of the overlay shall not exceed 45 degrees, and a slope of not more than 1:3 is recommended. (v) The overlay design thickness of items shall be based on the measured diameter, using only the weld overlay thickness conforming to the deposit analysis requirements. The combined wall thickness at the weld overlay, any	The design and flaw evaluation provisions in the proposed alternative are the same as Code Case N-504-3 as supplemented in Appendix Q with the exceptions below. The proposed design and flaw evaluation provisions are based on postulated flaws or as-found flaws. • For optimized weld overlay crack growth evaluations, a flaw with a depth of 10 percent and a circumference of 360 degrees shall be assumed or the as-found flaw size shall be used. The size of the flaws shall be projected to the end of the design life of the overlay. Crack growth, including both stress corrosion and fatigue crack growth, shall be evaluated in the materials in accordance with IWB-3640. If the flaw is at or near the boundary of two different materials, evaluation of flaw growth in both materials is required. • For optimized weld overlay design, flaws shall be assumed to be 75 percent through the original wall thickness for the entire circumference or in the case flaws are found by examination, evaluations shall be performed to assure the assumed crack depth is a bounding condition. *Basis: If an optimized weld overlay is applied, a Section XI, Appendix VIII inservice examination shall be performed on the welds so the condition shall be known. Preemptive or repair overlays shall be installed in accordance with Attachment 2 to proactively address and mitigate any future primary water stress corrosion cracking issues with the subject welds. Flaw assumptions are based on the requirements of MRP-169 and the requirements of Code Case N-740-2 (see Attachments 1 & 2).* *A preservice volumetric examination shall be performed after application of the weld overlay using an ASME Code Section XI, Appendix VIII (as implemented through PDI) examination procedure. This examination shall verify that for an optimized weld overlay there is no cracking in the upper 50 percent (circumferential). The preservice examination shall also demonstrate that the assumed through-wall crack depths are conservative. However, if any crack-like flaws are identified in the upper 25 percent of the original weld or base material by the preservice examination, then the as-found flaw (postulated 75 percent through-wall flaw plus the portion of the flaw in the upper 25 percent) shall be used for the crack growth analysis. With regard to design, flaws are considered to be either 75 percent through-wall for assumed crack depth or 100 percent through the original weld when a flaw is identified*

planar flaws in the weld overlay, and the effects of any discontinuity (for example, another weld overlay or reinforcement for a branch connection) within a distance of $0.75(Rt)^{1/2}$ from the toes of the weld overlay, shall be evaluated and meet the requirements of IWB-, IWC-, or IWD-3640. (vi) The effects of any changes in applied loads, as a result of weld shrinkage or existing flaws previously accepted by analytical evaluation shall be evaluated in accordance with IWB-3640, IWC-3640, or IWD-3640, as applicable.	*by inspection and no structural credit is taken for the weld. See Attachment 2 for requirements for axial cracks mitigated by optimized weld overlay. All other requirements are equivalent to Code Case N-504-3 as supplemented by Appendix Q.*
Examination and Inspection	Examination and Inspection
Acceptance Examination Q-4100(c) states that the examination volume in Figure Q-4100-1 shall be ultrasonically examined to assure adequate fusion (that is, adequate bond) with the base metal and to detect welding flaws, such as inter-bead lack of fusion, inclusions, or cracks. Planar flaws shall meet the preservice examination standards of Table IWB-3514-2. Laminar flaws shall meet the following:	The acceptance standards in Attachments 1 and 2 are identical to those of paragraph Q-4100(c) except that the proposed method includes requirements and clarifications that are not included in Appendix Q. First, it specifies that the ultrasonic examination shall be conducted at least 48 hours after completing the third layer of the weld overlay when ambient temperature temper bead welding is used. Secondly, it provides the following clarifications: • Interface C-D in Figure A2-1 between the weld overlay and the weld includes the bond and the HAZ from the weld overlay. • In applying the acceptance standards, wall thickness "t_w" shall be the thickness of the weld overlay. *Basis: Appendix Q is applicable to austenitic stainless steel materials only; therefore, ambient temperature temper bead welding would not be applicable. Ambient temperature temper bead welding is applicable to welding performed in the proposed alternative. When ambient temperature temper bead welding is performed, nondestructive examinations must be performed at least 48 hours after completing the third layer of the weld overlay to allow sufficient time for hydrogen cracking to occur (if it is to occur). Technical justification for starting the 48 hours after completion of the third layer of the weld overlay is provided in Section 5 of the Request. The other two changes are simply clarifications that were added to ensure that the examination requirements were appropriately performed.*
Q-4100(c)(1) states that laminar flaws shall meet the acceptance standards of Table IWB-3514-3.	The acceptance standards of the proposed method are identical to paragraph Q-4100(c)(1) except that the proposal includes the additional limitation that the total laminar flaw shall not exceed 10 percent of the weld surface area and that

	no linear dimension of the laminar flaw area exceeds 3.0 inches. *Basis: These changes were made to provide additional conservatism to the weld overlay examination and to reduce the size of the un-inspectable volume beneath a laminar flaw. See Section 5 of this Request for additional information.*
Q-4100(c)(4) allows the performance of radiography in accordance with the Construction Code as an alternative to Q-4100(c) (3).	The acceptance standards of the proposed alternative do not include the radiographic alternative of paragraph Q-4100(c)(4). *Basis: The UT examinations performed in accordance with the proposed alternative are in accordance with ASME Code, Section XI, Appendix VIII, Supplement 11 as implemented through the PDI. These examinations are considered more sensitive for detection of defects, either from fabrication or service-induced, than either ASME Code, Section III radiographic or ultrasonic methods. Furthermore, construction type flaws have been included in the PDI qualification sample sets for evaluating procedures and personnel. See Section 5 of this Request for additional justification.*
Preservice Inspection	Preservice Inspection
Q-4200(b) states that the preservice examination acceptance standards of Table IWB-3514-2 shall be met for the weld overlay. Cracks in the outer 25 percent of the base metal shall meet the design analysis requirements of Q-3000.	The acceptance standards of the proposed alternative are identical to paragraph Q-4200(b) except proposed alternative includes the following statement: "In applying the acceptance standards, wall thickness, shall be the thickness of the weld overlay." *Basis: This provision is actually a clarification that the nominal wall thickness of Table IWB-3514-2 shall be considered the thickness of the weld overlay. It must be remembered that the acceptance standards were originally written for the welds identified in IWB-2500. Because IWB-2500 does not address weld overlays, this clarification was provided to avoid any potential confusion. However, defining the weld overlay thickness as the nominal wall thickness of Table IWB-3514-2 has always been the practice since it literally becomes the new design wall of the piping or component nozzle.*
Pressure Testing	Pressure Testing
(h) The completed repair shall be pressure tested in accordance with IWA-5000. A system hydrostatic test is required if the flaw penetrated the pressure boundary. A system leakage test may be performed if pressure boundary is not penetrated.	The pressure testing requirements included in the alternative are similar to paragraph (h) of Code Case N-504-3 except that only a system leakage test per IWA-5000 is required.

PROPOSED ALTERNATIVE TO ASME CODE SECTION XI APPENDIX VIII FOR COMPATIBILITY WITH THE PERFORMANCE DEMONSTRATION INITIATIVE PROGRAM

SUPPLEMENT 11 - QUALIFICATION REQUIREMENTS FOR FULL STRUCTURAL OVERLAID WROUGHT AUSTENITIC PIPING WELDS	PDI PROGRAM: The Proposed Alternative to Supplement 11 Requirements
	Title Alternative: "Qualification Requirements for Overlaid Wrought Austenitic Piping Welds: **Basis:** *The title was clarified to be applicable for all overlays on wrought austenitic piping welds. The specific qualification shall detail the range of qualification.*
1 0 SPECIMEN REQUIREMENTS	
1.1 General. The specimen set shall conform to the following requirements.	
(b) The specimen set shall consist of at least three specimens having different nominal pipe diameters and overlay thicknesses. They shall include the minimum and maximum nominal pipe diameters for which the examination procedure is applicable. Pipe diameters within a range of 0.9 to 1.5 times a nominal diameter shall be considered equivalent. If the procedure is applicable to pipe diameters of 24 inches or larger, the specimen set must include at least one specimen 24 inches or larger but need not include the maximum diameter. The specimen set must include at least one specimen with overlay thickness within minus 0.1 inch to plus 0.25 inch of the maximum nominal overlay thickness for which the procedure is applicable.	**Alternative:** (b) The specimen set shall include specimens with overlays not thicker than 0.1 inch more than the minimum thickness, nor thinner than 0.25 inch of the maximum nominal overlay thickness for which the examination procedure is applicable. **Basis:** *To avoid confusion, the overlay thickness tolerance contained in the last sentence was reworded and the phrase "and the remainder shall be alternative flaws" was added to the next to last sentence in paragraph 1.1(d)(1).*
(d) Flaw Conditions	

SUPPLEMENT 11 - QUALIFICATION REQUIREMENTS FOR FULL STRUCTURAL OVERLAID WROUGHT AUSTENITIC PIPING WELDS	PDI PROGRAM: The Proposed Alternative to Supplement 11 Requirements
(1) Base metal flaws. All flaws must be cracks in or near the ~ butt weld heat-affected zone, open to the inside surface, and extending at least 75 percent through the base metal wall. Flaws may extend 100 percent through the base metal and into the overlay material; in this case, intentional overlay fabrication flaws shall not interfere with ultrasonic detection or characterization of the cracking. Specimens containing intergranular stress corrosion cracking shall be used when available.	**Alternative:** (1) ... must be in or... extending at least 50 percent through...intentional overlay fabrication flaws shall not interfere with ultrasonic detection or characterization of the base metal flaws. Specimens containing intergranular stress corrosion cracking shall be used when available. At least 70 percent of the flaws in the detection and sizing tests shall be cracks and the remainder shall be alternative flaws. Alternative flaw mechanisms, if used, shall provide crack-like reflective characteristics and shall be limited by the following: (a) The use of alternative flaws shall be limited to when the implantation of cracks produces spurious reflectors that are uncharacteristic of actual flaws. (b) Flaws shall be semi elliptical with a tip width of less than or equal to 0.002 inch. **Basis:** *This paragraph requires that all base metal flaws be cracks and to extend at least 50 percent through the base metal wall. Implanting a crack requires excavation of the base material on at least one side of the flaw. While this may be satisfactory for ferritic materials, it does not produce a useable axial flaw in austenitic materials because the sound beam, which normally passes only through base material, must now travel through weld material on at least one side, producing an unrealistic flaw response. To resolve this issue, the PDI program revised this paragraph to allow use of alternative flaw mechanisms under controlled conditions. For example, alternative flaws shall be limited to when implantation of cracks precludes obtaining an effective ultrasonic response, flaws shall be semi elliptical with a tip width of less than or equal to 0.002 inch, and at least 70 percent of the flaws in the detection and sizing test shall be cracks and the remainder shall be alternative flaws. To avoid confusion, the overlay thickness tolerance contained in paragraph 1.1(b) last sentence, was reworded and the phrase "and the remainder shall be alternative flaws" was added to the next to last sentence. Paragraph 1.1(d)(1) includes the statement that intentional overlay fabrication flaws shall not interfere with ultrasonic detection or characterization of the base metal flaws. Additionally 1.1(d)(1) was revised to state that flaws must extend at least 50 percent through the base metal wall. This allows qualification to take advantage of additional test specimens to demonstrate increased examination depth.*
(e) Detection Specimens	

SUPPLEMENT 11 - QUALIFICATION REQUIREMENTS FOR FULL STRUCTURAL OVERLAID WROUGHT AUSTENITIC PIPING WELDS	PDI PROGRAM: The Proposed Alternative to Supplement 11 Requirements
(1) At least 20 percent but less than 40 percent of the flaws shall be oriented within +/-20 degrees of the pipe axial direction. The remainder shall be oriented circumferentially. Flaws shall not be open to any surface to which the candidate has physical or visual access. The rules of IWA-3300 shall be used to determine whether closely spaced flaws should be treated as single or multiple flaws.	**Alternative:** (1) At least 20 percent but less than 40 percent of the base metal flaws shall be oriented within +/-20 degrees of the pipe axial direction. The remainder shall be oriented circumferentially. Flaws shall not be open to any surface to which the candidate has physical or visual access. **Basis:** *The requirement for axially oriented overlay fabrication flaws was excluded from the PDI Program as an improbable scenario. Weld overlays are typically applied using automated gas tungsten arc welding techniques with the filler metal applied in a circumferential direction. Because resultant fabrication induced discontinuities would also be expected to have major dimensions oriented in the circumferential direction axial overlay fabrication flaws are unrealistic. The requirement for using IWA-3300 for proximity flaw evaluation was excluded; instead indications shall be sized based on their individual merits.*
(2) Specimens shall be divided into base and overlay grading units. Each specimen shall contain one or both types of grading units.	**Alternative:** (2) Specimens shall be divided into base metal and overlay fabrication grading units. Each specimen shall contain one or both types of grading units. Flaws shall not interfere with ultrasonic detection or characterization of other flaws. **Basis:** *Inclusion of "metal" and "fabrication" provides clarification. Flaw identification is improved by ensuring flaws are not masked by other flaws.*
(a)(1) A base grading unit shall include at least 3 inches of the length of the overlaid weld. The base grading unit includes the outer 25 percent of the overlaid weld and base metal on both sides. The base grading unit shall not include the inner 75 percent of the overlaid weld and base metal overlay material, or base metal-to-overlay interface.	**Alternative:** (a)(1) A base metal grading unit includes the overlay material and the outer 50 percent of the original overlaid weld. The base metal grading unit shall extend circumferentially for at least 1 inch and shall start at the weld centerline and be wide enough in the axial direction to encompass one half of the original weld crown and a minimum of 0.50 inch of the adjacent base material. **Basis:** *The phrase "and base metal on both sides," was inadvertently included in the description of a base metal grading unit, The PDI program intentionally excludes this requirement because some of the qualification samples include flaws on both sides of the weld. To avoid confusion several instances of the term "cracks" or "cracking" were changed to the term "flaws" because of the use of alternative Flaw mechanisms. Modified to require that a base metal grading unit include at least1inch of the length of the overlaid weld, rather than 3 inches.*

SUPPLEMENT 11 - QUALIFICATION REQUIREMENTS FOR FULL STRUCTURAL OVERLAID WROUGHT AUSTENITIC PIPING WELDS	PDI PROGRAM: The Proposed Alternative to Supplement 11 Requirements
(a)(2) When base metal cracking penetrates into the overlay material, the base grading unit shall include the overlay metal within 1 inch of the crack location. This portion of the overlay material shall not be used as part of any overlay grading unit.	**Alternative:** (a)(2) When base metal flaws penetrate into the overlay material, the base metal grading unit shall not be used as part of any overlay fabrication grading unit. **Basis:** *Substituted terms provide clarification and are consistent with 1d(1) above. The PDI program adjusts for this conservative change for excluding this type grading unit.*
(a)(3) When a base grading unit is designed to be unflawed, at least 1 inch of unflawed overlaid weld and base metal shall exist on either side of the base grading unit. The segment of weld length used in one base grading unit shall not be used in another base grading unit. Base grading units need not be uniformly spaced around the specimen.	**Alternative:** (a)(3) Sufficient unflawed overlaid weld and base metal shall exist on all sides of the grading unit to preclude interfering reflections from adjacent flaws. **Basis:** *Modified to require sufficient unflawed overlaid weld and base metal to exist on all sides of the grading unit to preclude interfering reflections from adjacent flaws, rather than the 1 inch requirement.*
(b)(1) An overlay grading unit shall include the overlay material and the base metal-to-overlay interface of at least 6 square inches. The overlay grading unit shall be rectangular, with minimum dimensions of 2 inches.	**Alternative:** (b)(1) An overlay fabrication grading unit shall include the overlay material and the base metal-to-overlay interface for a length of at least 1 inch **Basis:** *The PDI program reduces the base metal-to-overlay interface to at least 1 inch (in lieu of a minimum of 2 inches) and eliminates the minimum rectangular dimension. This criterion is necessary to allow use of existing examination specimens that were fabricated in order to meet NRC Generic Letter 88-01. This criterion may be more challenging than the ASME Code because of the variability associated with the shape of the grading unit.*
(b)(2) An overlay grading unit designed to be unflawed shall be surrounded by unflawed overlay material and unflawed base metal-to-overlay interface for at least 1 inch around its entire perimeter. The specific area used in one overlay grading unit shall not be used in another overlay grading unit. Overlay grading units need not be spaced uniformly about the specimen.	**Alternative:** (b)(2) Overlay fabrication grading units designed to be unflawed shall be separated by unflawed overlay material and unflawed base metal-to-overlay interface for at least 1 inch at both ends. Sufficient unflawed overlaid weld and base metal shall exist on both sides of the overlay fabrication grading unit to preclude interfering reflections from adjacent flaws. The specific area used in one overlay fabrication grading unit shall not be used in another overlay fabrication grading unit. Overlay fabrication grading units need not be spaced uniformly about the specimen. **Basis:** *Paragraph 1.1 (e)(2)(b)(2) states that overlay fabrication grading units designed to be unflawed shall be separated by unflawed overlay material and unflawed base metal-to-overlay interface for at least 1 inch at both ends, rather than around its entire perimeter.*

SUPPLEMENT 11 - QUALIFICATION REQUIREMENTS FOR FULL STRUCTURAL OVERLAID WROUGHT AUSTENITIC PIPING WELDS	PDI PROGRAM: The Proposed Alternative to Supplement 11 Requirements
(b)(3) Detection sets shall be selected from Table VIII-S2-1. The minimum detection sample set is five flawed base grading units, ten unflawed base grading units, five flawed overlay grading units, and ten unflawed overlay grading units. For each type of grading unit, the set shall contain at least twice as many unflawed as flawed grading units.	**Alternative:**...base metal grading units, ten unflawed base metal grading units, five flawed overlay fabrication grading units, and ten unflawed overlay fabrication grading units. For each type of grading unit, the set shall contain at least twice as many unflawed as flawed grading units. For initial procedure qualification, detection sets shall include the equivalent of three personnel qualification sets. To qualify new values of essential variables, at least one personnel qualification set is required. **Basis:** *Clarified the guidance for initial procedure qualifications versus qualifying new values of essential variables.*
(f) Sizing Specimen	
(1) The minimum number of flaws shall be ten. At least 30 percent of the flaws shall be overlay fabrication flaws. At least 40 percent of the flaws shall be cracks open to the inside surface.	**Alternative:** (1) The...least 40 percent of the flaws shall be open to the inside surface. Sizing sets shall contain a distribution of flaw dimensions to assess sizing capabilities. For initial procedure qualification, sizing sets shall include the equivalent of three personnel qualification sets. To qualify new values of essential variables, at least one personnel qualification set is required. **Basis:** *Clarified the guidance for initial procedure qualifications versus qualifying new values of essential variables and is consistent with 1.1(d)(1) above..*
(3) Base metal cracking used for length sizing demonstrations shall be oriented circumferentially.	**Alternative:** (3) Base metal flaws used…circumferentially. **Basis:** *Clarified wording to be consistent with 1.1(d)(1) above.*
(4) Depth sizing specimen sets shall include at least two distinct locations where cracking in the base metal extends into the overlay material by at least 0.1 inch in the through-wall direction.	**Alternative:** (4) Depth sizing specimen sets shall include at least two distinct locations where a base metal flaw extends into the overlay material by at least 0.1 inch in the through-wall direction. **Basis:** *Clarified wording to be consistent with 1.1d(1) above.*
2.0 Conduct of Performance Demonstration	
The specimen inside surface and identification shall be concealed from the candidate. All examinations shall be completed prior to grading the results and presenting the results to the candidate. Divulgence of particular specimen results or candidate viewing of unmasked specimens after the performance demonstration is prohibited.	**Alternative:** The specimen ...prohibited. The overlay fabrication flaw test and the base metal flaw test may be performed separately. **Basis:** *Clarified wording to describe process .*
2.1 Detection Test.	
Flawed and unflawed grading units shall be randomly mixed. Although the boundaries of specific grading units shall not be revealed to the candidate, the candidate shall be made aware of the type or types of grading units (base or overlay) that are present for each specimen.	**Alternative:** Flawed…(base metal or overlay fabrication)…each specimen. **Basis:** *Clarified wording similar to 1.1(e)2 above.*

SUPPLEMENT 11 - QUALIFICATION REQUIREMENTS FOR FULL STRUCTURAL OVERLAID WROUGHT AUSTENITIC PIPING WELDS	PDI PROGRAM: The Proposed Alternative to Supplement 11 Requirements
2.2 Length Sizing Test	
(d) For flaws in base grading units, the candidate shall estimate the length of that part of the flaw that is in the outer 25 percent of the base wall thickness.	**Alternative:** (d) For . . . base metal grading . . . outer 50 percent of the base metal wall thickness. **Basis:** *Clarified wording for consistency and to be consistent with 1.1(d)(1) above.*
2.3 Depth Sizing Test.	
For the depth sizing test, 80 percent of the flaws shall be sized at a specific location on the surface of the specimen identified to the candidate. For the remaining flaws, the regions of each specimen containing a flaw to be sized shall be identified to the candidate. The candidate shall determine the maximum depth of the flaw in each region.	**Alternative:** (a) The depth sizing test may be conducted separately or in conjunction with the detection test. (b) When the depth sizing test is conducted in conjunction with the detection test and the detected flaws do not satisfy the requirements of 1.1(f), additional specimens shall be provided to the candidate. The regions containing a flaw to be sized shall be identified to the candidate. The candidate shall determine the maximum depth of the flaw in each region. (c) For a separate depth sizing test, the regions of each specimen containing a flaw to be sized shall be identified to the candidate. The candidate shall determine the maximum depth of the flaw in each region. **Basis:** *Clarified wording to better describe process.*
3.0 ACCEPTANCE CRITERIA	
3.1 Detection Acceptance Criteria	
Examination procedures, equipment, and personnel are qualified for detection when the results of the performance demonstration satisfy the acceptance criteria of Table VIII-S2-1 for both detection and false calls. The criteria shall be satisfied separately by the demonstration results for base grading units and for overlay grading units.	**Alternative:** Examination procedures are qualified for detection when: a. All flaws within the scope of the procedure are detected and the results of the performance demonstration satisfy the acceptance criteria of Table VIII-S2-1 for false calls. b. At least one successful personnel demonstration has been performed meeting the acceptance criteria defined in (c). c. Examination equipment and personnel are qualified for detection when the results of the performance demonstration satisfy the acceptance criteria of Table VIII-S2-1 for both detection and false calls. d. The criteria in (b) and (c) shall be satisfied separately by the demonstration results for base metal grading units and for overlay fabrication grading units. **Basis:** *Clarified wording to better describe the difference between procedure qualification and equipment and personnel qualifications.*
3.2 Sizing Acceptance Criteria	
(a) The RMS error of the flaw length measurements, as compared to the true flaw lengths, is less than or equal to 0.75 inch. The length of base metal cracking is measured at the 75 percent through-base-metal position.	**Alternative:** (a) The...base metal flaws are...50 percent through-base-metal position. **Basis:** *Clarified wording to be consistent with 1.1(d)(1) above.*

SUPPLEMENT 11 - QUALIFICATION REQUIREMENTS FOR FULL STRUCTURAL OVERLAID WROUGHT AUSTENITIC PIPING WELDS	PDI PROGRAM: The Proposed Alternative to Supplement 11 Requirements
(b) All extensions of base metal cracking into the overlay material by at least 0.1 inch are reported as being intrusions into the overlay material.	**Alternative:** This requirement is omitted. ***Basis:*** *The requirement for reporting all extensions of cracking into the overlay is omitted from the PDI Program because it is redundant to the RMS calculations performed in paragraph 3.2(c) and its presence adds confusion and ambiguity to depth sizing as required by paragraph 3.2(c). This also makes the weld overlay program consistent with the supplement 2 depth sizing criteria.*

Proposed Alternative
in Accordance with 10 CFR 50.55a(a)(3)(i)

--Alternative Provides Acceptable Level of Quality and Safety--

1. American Society of Mechanical Engineers (ASME) Code Components Affected

Components:	Reactor Coolant Pump Inlet Nozzle Dissimilar Metal Welds		
Code Class:	Class 1		
Examination Category:	B-J		
Code Item Number:	B9.11		
Weld Numbers:	**Description**	**Size**	**Materials**
RC-MK-A-67-1-FW134B	Reactor Coolant Pump 1-1 Suction Nozzle	Nominal 28 inch ID	Cast Stainless Steel Inlet Nozzle / Alloy 82-182 Weld / Carbon Steel Elbow
RC-MK-A-67-3-FW105B	Reactor Coolant Pump 1-2 Suction Nozzle	Nominal 28 inch ID	Cast Stainless Steel Inlet Nozzle / Alloy 82-182 Weld / Carbon Steel Elbow
RC-MK-A-67-1-FW105A	Reactor Coolant Pump 2-1 Suction Nozzle	Nominal 28 inch ID	Cast Stainless Steel Inlet Nozzle / Alloy 82-182 Weld / Carbon Steel Elbow
RC-MK-A-67-2- FW134A	Reactor Coolant Pump 2-2 Suction Nozzle	Nominal 28 inch ID	Cast Stainless Steel Inlet Nozzle / Alloy 82-182 Weld / Carbon Steel Elbow

- Cast Stainless Steel Inlet – A- 351 Grade CF8M (P-8)
  Carbon Steel Elbow - A 516 Grade 70 (P-1) 90 degree elbow internally clad with SA 240-304L
- ID = Inside Diameter

Components:	Reactor Coolant Pump Discharge Piping Dissimilar Metal Welds		
Code Class:	Class 1		
Examination Category:	B-J		
Code Item Number:	B9.11		
Weld Numbers:	**Description**	**Size[2]**	**Materials[3]**
RC-MK-B-59-1-SW143B	Reactor Coolant Pump 1-1 Discharge Piping	Nominal 28 inch ID	Stainless Steel Pipe / Alloy 82-182 Weld / Carbon Steel Elbow
RC-MK-B-44-1-SW69B	Reactor Coolant Pump 1-2 Discharge Piping	Nominal 28 inch ID	Stainless Steel Pipe / Alloy 82-182 Weld / Carbon Steel Elbow
RC-MK-B-61-1-SW69A	Reactor Coolant Pump 2-1 Discharge Piping	Nominal 28 inch ID	Stainless Steel Pipe / Alloy 82-182 Weld / Carbon Steel Elbow
RC-MK-B-56-1-SW143A	Reactor Coolant Pump 2-2 Discharge Piping	Nominal 28 inch ID	Stainless Steel Pipe / Alloy 82-182 Weld / Carbon Steel Elbow

[3] Stainless Steel Pipe – A-376 Type 316 (P-8)
Carbon Steel Elbow - A 516 Grade 70 (P-1) 24 degree elbow internally clad with SA 240-304L

Components:	Reactor Vessel Core Flood Nozzle Dissimilar Metal Welds		
Code Class:	Class 1		
Examination Category:	B-F		
Code Item Number:	B5.10		
Weld Numbers:	**Description**	**Size**	**Materials**
RC-RPV-WR-53-Y	Core Flood 1-1 Safe-End to RV Nozzle (Y-Axis)	Nominal 12 5/8 inch ID	Low Alloy Steel Nozzle / Alloy 82-182 Weld / Stainless Steel Safe End
RC-RPV-WR-53-W	Core Flood 1-2 Safe-End to RV Nozzle (X-Axis)	Nominal 12 5/8 inch ID	Low Alloy Steel Nozzle / Alloy 82-182 Weld / Stainless Steel Safe End

- Low Alloy Steel Nozzle - SA-508 Class 2 (P-3) internally clad with SA 371-ER 308L
- Stainless Steel Safe End - SA-336 F8M (P-8)

Components:	Reactor Coolant System Cold Leg Drain Line Dissimilar Metal Welds		
Code Class:	Class 1		
Examination Category:	B-J		
Code Item Number:	B9.21		
Weld Number	**Description**	**Size**	**Materials**
RC-40-CCA-18-3-FW9	Cold Leg 1-2 Drain Nozzle To Pipe	Nominal 2 ½ inch ID	Carbon Steel Nozzle / Alloy 82-182 Weld / Stainless Steel Elbow
RC-40-CCA-18-7-FW25	Cold Leg 2-1 Drain Nozzle To Drain Pipe	Nominal 2 ½ inch ID	Carbon Steel Nozzle / Alloy 82-182 Weld / Stainless Steel Elbow
RC-40-CCA-18-5-FW18	Cold Leg 2-2 Drain Nozzle To Drain Pipe	Nominal 2 ½ inch ID	Carbon Steel Nozzle / Alloy 82-182 Weld / Stainless Steel Elbow

- Carbon Steel Nozzle - A-105 Grade 2 (P-1) internally clad with SA-371 ER 308L stainless steel Stainless Steel Elbow - SA-403 WP 316 (P-8)

2. **Applicable Code Edition and Addenda**

American Society of Mechanical Engineers Boiler and Pressure Vessel Code (ASME Code) Section XI – 1995 Edition through 1996 Addenda

3. **Applicable Code Requirement**

IWA-4410(a) of ASME Code Section XI states:
"Repair/replacement activities shall be performed in accordance with the Owner's Requirements and the original Construction Code of the component or system, except as provided in IWA-4410 (b), (c), and (d)."

IWA-4410(b) of ASME Code Section XI states in part:
"Later Editions and Addenda of the Construction Code, or a later different Construction Code, either in its entirety or portions thereof, and Code Cases may be used, provided the substitution is as listed in IWA-4221(b)."

IWA-4410(c) of ASME Code Section XI states:
"Alternatively, the applicable requirements of IWA-4600 may be used for welding and the applicable requirements of IWA-4700 may be used for heat exchanger tube plugging and sleeving."

ASME Code Section XI, Appendix VIII, Supplement 11 provides requirements for the qualification requirements for the ultrasonic examination of Full Structural Overlaid Wrought Austenitic Piping Welds.

4. Reason for Request

Dissimilar metal welds (DMWs) containing nickel welding alloys 82 and 182 have experienced primary water stress corrosion cracking (PWSCC) in components operating at pressurized water reactor temperatures.

FirstEnergy Nuclear Operating Company (FENOC) proposes to mitigate the primary water stress corrosion cracking susceptibility of the Davis-Besse Nuclear Power Station (Davis-Besse) reactor coolant pump inlet and discharge, the cold leg drain nozzle, and the reactor vessel core flood nozzle dissimilar metal welds by installing a full structural weld overlay (full structural weld overlay) on each of the dissimilar metal welds. This approach provides an alternative to inspection alone as a means to assure the structural integrity of these locations. Davis-Besse may choose to apply preemptive full structural weld overlays without performance of an ultrasonic examination prior to the design and application of the weld overlay contingent upon authorization from the NRC.

Currently, there are no generically accepted criteria for a licensee to apply a full structural weld overlay to Alloy 82/182 weld material. The issue and addenda of ASME Code Section XI applicable to Davis-Besse does not contain requirements for weld overlays. Dissimilar metal weld overlays have been applied to other components at Davis-Besse using the modified requirements of ASME Code Cases N-504-2 and N-638-1. However, since Code Case N-504 (and its later versions) is written specifically for stainless steel pipe-to-pipe weld full structural overlays, and Code Case N-638-1 contains unnecessary restrictions and requirements, an alternative is desired. This request describes the requirements FENOC proposes to use to design and install full structural weld overlays on reactor vessel nozzle and reactor coolant piping dissimilar metal welds.

5. Proposed Alternative and Basis for Use

Pursuant to 10CFR 50.55a (a)(3)(i), FENOC proposes as an alternative to the ASME Code requirements stated above, the use of the alternative described in Attachment 1 to this request to perform full structural weld overlays. This alternative is based on the methodology contained in ASME Code Case N-740-2.

Appendix VIII, Supplement 11 of the 1995 Edition, 1996 Addenda of ASME Code Section XI [reference 1] specifies requirements for performance demonstration of ultrasonic examination procedures, equipment, and personnel used to detect and size flaws in full structural overlays of wrought austenitic piping welds. Relief is requested to allow use of the Performance Demonstration Initiative (PDI) program implementation of Appendix VIII for qualification of ultrasonic examinations used to detect and size flaws in the preemptive structural weld overlays of this request. The proposed modifications to Appendix VIII, Supplement 11 for use on full structural weld overlays are detailed in Attachment 2.

The use of this alternative is requested on the basis that the proposed requirements will provide an acceptable level of quality and safety.

FENOC plans to apply a full structural Alloy 52M overlay to each of the dissimilar metal Alloy 82/182 dissimilar metal welds identified in Section 1.0, unless optimized weld overlays are applied as proposed within FENOC Alternative RR-A32. Electric Power Research Institute (EPRI) Materials Reliability Program MRP-169 [reference 8] provides

the basis and requirements for the weld overlay techniques. The MRP-169 design requirements that apply to Davis-Besse are detailed in Attachment 1 and the implementation requirements that apply are detailed in Attachments 1 and 2.

ASME Code Case N-740-2 has been approved recently by the ASME Code Committee to specifically address full structural overlays on nickel alloy dissimilar metal welds. ASME Code Case N-740-2 also incorporates the latest approved versions of ASME Code Case N-638. However, ASME Code Case N-740-2 has not yet been accepted by the NRC in Regulatory Guide 1.147. ASME Code Case N-504-3, which provides requirements for weld overlay of stainless steel piping, has been conditionally accepted in Revision 15 of Regulatory Guide 1.147 with the condition that the provisions of ASME Code Section XI, Nonmandatory Appendix Q, Weld Overlay Repair of Class 1, 2, and 3 Austenitic Stainless Steel Piping Weldments, must be met. A comparison of the proposed alternative and ASME Code Case N-504-3/Appendix Q is provided in Attachment 3.

The proposed alternative provides an acceptable methodology for preventing primary water stress corrosion cracking and for reducing defects that may be observed in these welds to an acceptable size. The use of weld overlay filler metals that are resistant to primary water stress corrosion cracking (for example, Alloy 52/52M), weld overlay procedures that create compressive residual stress profiles in the original weld, and post overlay preservice and inservice inspection requirements provide assurance that structural integrity is maintained for the life of the plant. The weld overlays shall also meet the applicable stress limits from ASME Code Section III. Crack growth evaluations for primary water stress corrosion cracking and fatigue of as-found (or conservatively postulated) flaws shall demonstrate that structural integrity will be maintained.

Rupture of the large primary loop piping at Davis-Besse has been eliminated as the structural design basis. The effects of the weld overlay application on the leak-before-break analysis will be evaluated to show the effects of do not invalidate the conclusions of the existing design basis.

Schematic Configuration for FSWOL Locations

Schematic representations of the weld overlay for the reactor coolant pump inlet and discharge dissimilar metal welds are presented in Figures 5-1 and 5-2, respectively. Schematic representations of the weld overlay for the reactor vessel core flood nozzles and reactor coolant pump cold leg drain nozzles dissimilar metal welds are presented in Figures 5-3 and 5-4, respectively.

Reactor Coolant Pump Inlet Nozzle Dissimilar Metal Welds

The inlet to the reactor coolant pumps is a 28-inch carbon steel elbow that is welded to the cast stainless steel pump inlet. The carbon steel elbow is buttered with Alloy 82/182 weld material. The carbon steel elbow is internally clad with stainless steel. The carbon steel elbow is welded to the pump inlet with Alloy 82/182 weld material.

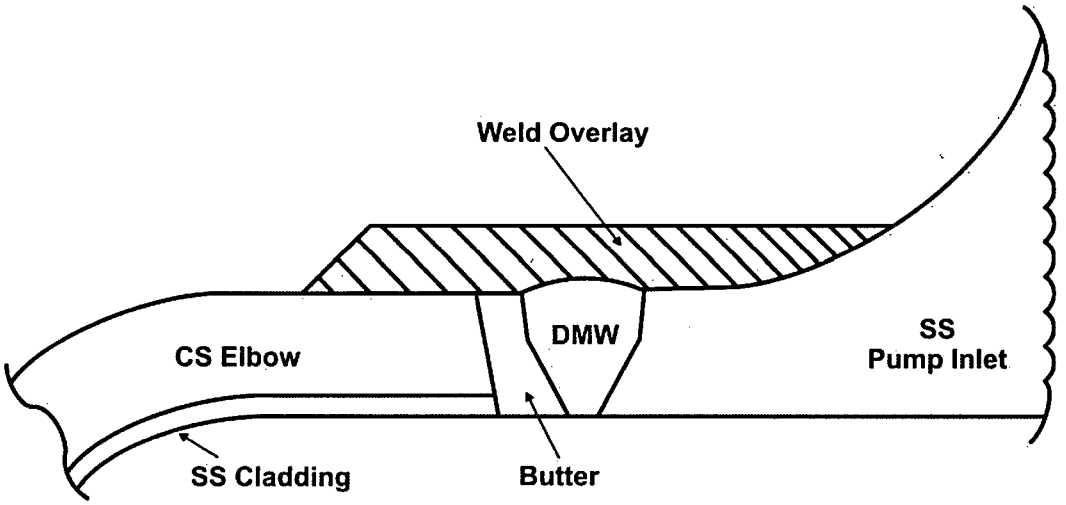

Notes:
1. Elbow – A-516, Grade 70 carbon steel, internally clad with SA240-304L
2. Cast Stainless Steel Pump Inlet – A-351 Grade CF8M, Type 316

Figure 5-1 Schematic Configuration for FSWOL for Reactor Coolant Pump Inlets (Suction)

Reactor Coolant Pump Discharge Piping Dissimilar Metal Welds

The reactor coolant pump outlets (discharge) are fabricated from cast austenitic stainless steel and attached to 28-inch austenitic stainless steel piping which acts as a safe end. The piping is then attached to an elbow fabricated from carbon steel internally clad with stainless steel. The carbon steel elbow is buttered with Alloy 82/182 weld material. The dissimilar metal weld is fabricated from Alloy 82/182 weld metal.

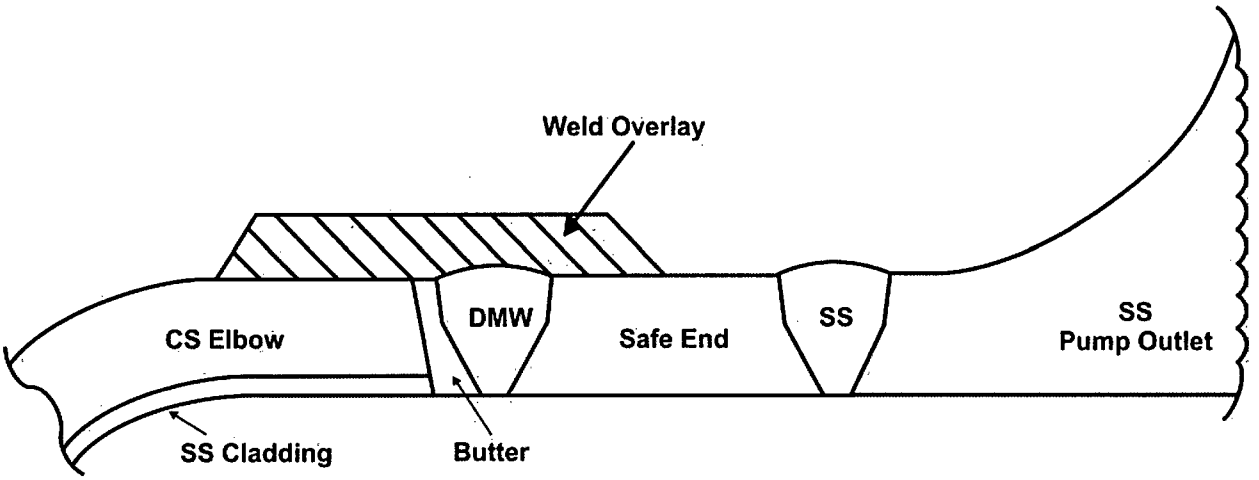

Notes:
1. Elbow – A-516, Grade 70, internally clad with SA240-304L
2. Safe End – A-376, Type 316
3. Cast Stainless Steel Pump Outlet (Discharge) – A-351 Grade CF8M, Type 316

Figure 5-2 Schematic Configuration for FSWOL for Reactor Coolant Pump Outlets (Discharge)

Reactor Vessel Core Flood Nozzle Dissimilar Metal Welds

The core flood nozzle is a horizontal 14 inch low alloy steel nozzle welded to the carbon steel reactor vessel, and is internally clad with stainless steel. The nozzle is welded to a stainless steel safe end with Alloy 82/182 weld material. The stainless steel safe end is then welded to a 14 inch stainless steel pipe.

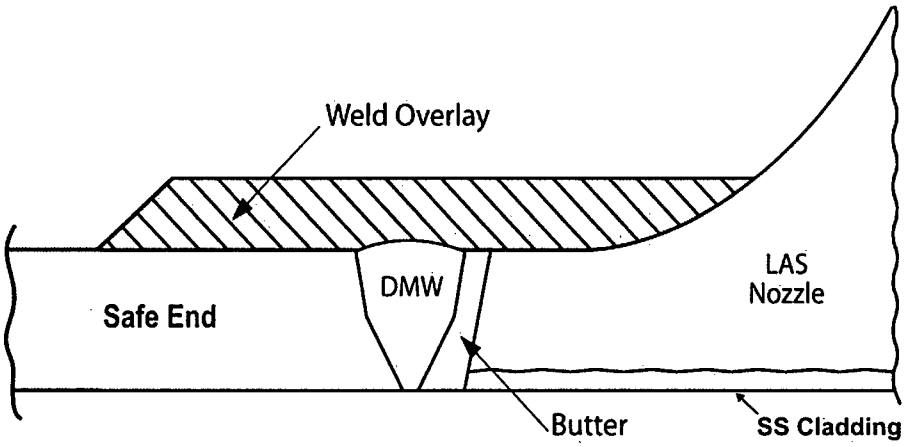

Notes:
1. Safe End – SA-336, F8M
2. LAS Nozzle – SA-508, Class 2, internally clad with SA 371-ER 308L

Figure 5-3 Schematic Configuration for FSWOL for RPV Core Flood Nozzles

Reactor Coolant System Cold Leg Drain Line Dissimilar Metal Welds

The Reactor Coolant Pump inlet lines have a drain connection at the low point of the line. Each cold leg drain nozzle is a vertical 2 ½ inch carbon steel nozzle that is welded to the carbon steel Reactor Coolant piping, and is internally clad with stainless steel. The dissimilar metal weld is fabricated from Alloy 82/182 weld metal.

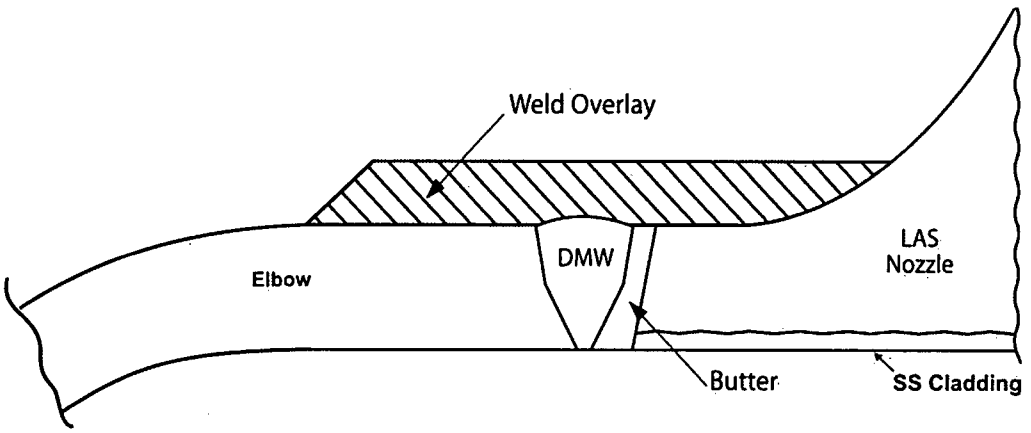

Notes:
1. Elbow – SA403, Grade WP316
2. Carbon Steel Nozzle –A105, Grade 2, internally clad with SA371 ER308L

Figure 5-4: Schematic Configuration for FSWOL for RCP Cold Leg Drain Line Nozzles

Suitability of Proposed Post Overlay Nondestructive Examination (NDE)

As a part of the design of the weld overlay, the weld length, surface finish, and flatness are specified to allow qualified ASME Code Section XI, Appendix VIII ultrasonic examinations, as implemented through the EPRI PDI Program, of the weld overlay and the required volume of the base material and original weld. The examinations specified in this proposed alternative provide adequate assurance of structural integrity for the following reasons:

- The ultrasonic (UT) examinations to be performed with the proposed alternative are in accordance with ASME Code Section XI, Appendix VIII, Supplement 11, as implemented through the PDI. These examinations are considered more sensitive for detection of defects, either from fabrication or service induced, than either ASME Code Section III radiography or ultrasonic methods. Further, construction flaws have been included in the PDI qualification sample sets for evaluating procedures and personnel.

- ASME Code Section XI has specific acceptance criteria and evaluation methodology to be utilized with the results from these more sensitive examinations. They consider the materials in which the flaw indications are detected, the orientation and size of the indications, and ultimately their potential structural effects on the

component. The acceptance criteria include allowable flaw indication tables for planar flaws (Table IWB-3514-2) and for laminar flaws (Table IWB-3514-3).

- A laminar flaw is defined in ASME Code Section XI as a flaw oriented within 10 degrees of a plane parallel to the surface of the component. This definition is applicable to welds and weld overlays as well as base materials. The standard imposed for evaluating laminar flaws in ASME Code Section XI is more restrictive than the Section III standard for evaluating laminations. The ASME Code Section XI laminar flaw standards, ASME Code Table IWB-3514-3, are supplemented in Attachment 1 such that the total laminar flaw shall not exceed 10 percent (%) of the weld overlay surface area and no linear dimension of the laminar flaw shall exceed 3 inches. For weld overlay areas where examination is precluded by the presence of the flaw, it is required to postulate the area as being cracked.

- Any planar flaws found during either the weld overlay acceptance or preservice examinations are required to meet the preservice standards of ASME Code Table IWB-3514-2. In applying the planar flaw standards, the thickness of the component shall be defined as the thickness of the weld overlay and the issue of any flaws masked from examination shall also be addressed as a part of the proposed alternative.

- Weld overlays for repair of cracks in piping are not addressed by ASME Code Section III. ASME Code Section III utilizes nondestructive examination procedures and techniques with flaw detection capabilities that are within the practical limits of workmanship standards for welds. These standards are most applicable to volumetric examinations conducted by radiographic examination. Radiography (RT) of weld overlays is not practical because of the presence of radioactive material in the reactor coolant system and water in the pipes. The ASME Code Section III acceptance standards are written for a range of fabrication flaws including lack of fusion, incomplete penetration, cracking, slag inclusions, porosity, and concavity. However, experience and fracture mechanics have demonstrated that many of the flaws that would be rejected using ASME Code Section III acceptance standards do not have a significant effect on the structural integrity of the component. The proposed alternatives in Attachments 1 and 2 were written to specifically address weld overlays, and not only does this alternative adequately examine the weld overlays, but it provides more appropriate examinations and acceptance criteria than the staff imposed position. Conversely, the imposition of ASME Code Section III acceptance standards to weld overlays is inconsistent with years of NRC precedence and without justification given the evidence of past NRC approvals and operating experience.

The ASME Code Section XI acceptance standards are the logical choice for evaluation of potential flaw indications in post-overlay examinations, in which unnecessary repairs to the overlays would result in additional personnel radiation exposure without a compensating increase in safety and quality, and could potentially degrade the effectiveness of the overlays by affecting the favorable residual stress field that they produce. They are consistent with previous criteria approved by the NRC for weld overlay installations. Weld overlays have been used for repair and mitigation of cracking in boiling water reactors for many years. In Generic Letter 88-01, the NRC approved the use of ASME Code Section XI inspection procedures for determining the acceptability of installed weld

overlays. In addition, for a number of years the NRC has accepted various versions of ASME Code Case N-504 in RG 1.147 with no conditions regarding the use of ASME Code Section XI acceptance standards for determining the acceptability of weld overlays. ASME Code Case N-504 (and its later versions) was developed to codify the boiling water reactor (BWR) weld overlay experience and NRC approval is consistent with the NRC acceptability of BWR weld overlays. Similarly, ASME Code Case N-638 was acceptable for use in RG 1.147 Revision 13 with no conditions and has been approved by the NRC for use in both BWR and PWR weld overlay installations using the ASME Code Section XI acceptance standards. The NRC staff found the use of the ASME Code Section XI, Appendix VIII, Supplement 11 acceptable for identifying both construction and service induced flaws in the Safety Evaluation Report (SER) for DC Cook Plant dated February 19, 2006 and tacitly approved the associated ASME Code Section XI acceptance criteria, Tables IWB-3514-2 and IWB-3514-3. The staff also accepted the use of ASME Code Section XI acceptance standards in an SER dated July 21, 2004 for the Three Mile Island Plant, for disposition of flaws identified in a weld overlay by PDI qualified ultrasonic examinations, with additional restrictions similar to those proposed herein for regions in which inspection is precluded by the flaws.

Suitability of Proposed Ambient Temperature Temper Bead Technique

The overlays addressed by this alternative shall be performed using ambient temperature temper bead welding in lieu of Post Weld Heat Treatment, in accordance with Attachment 1. Research by the Electric Power Research Institute (EPRI) and other organizations on the use of an ambient temperature temper bead process using the machine gas tungsten arc welding (GTAW) process is documented in EPRI Report GC-111050 [reference 3]. According to the EPRI report, repair welds performed with an ambient temperature temper bead procedure utilizing the machine gas tungsten arc welding process exhibit mechanical properties equivalent to or better than those of the surrounding base material. Laboratory testing, analysis, successful procedure qualifications, and successful repairs have all demonstrated the effectiveness of this process.

The effects of the ambient temperature temper bead welding process of Attachment 1 on mechanical properties of repair welds, hydrogen cracking, cold restraint cracking, and extent of overlay coverage of ferritic base metal are addressed in the following paragraphs.

Mechanical Properties of Repair Welds

The principal reasons to preheat a component prior to repair welding is to minimize the potential for cold cracking. The two cold cracking mechanisms are hydrogen cracking and restraint cracking. Both of these mechanisms occur at ambient temperature. Preheating slows down the cooling rate resulting in a ductile, less brittle microstructure thereby lowering susceptibility to cold cracking. Preheat also increases the diffusion rate of monatomic hydrogen that may have been trapped in the weld during solidification. As an alternative to preheat, the ambient temperature temper bead welding process utilizes the tempering action of the welding procedure to produce tough and ductile microstructures. Because precision bead placement and heat input control are utilized in the machine gas tungsten arc welding process, effective tempering of weld heat affected zone (HAZ) is possible without the application of preheat. According to Section 2-1 of EPRI Report GC-111050, "the temper bead process is carefully designed and controlled such that successive weld beads supply the appropriate quantity of heat to the untempered heat

affected zone such that the desired degree of carbide precipitation (tempering) is achieved. The resulting microstructure is very tough and ductile."

The IWA-4600 temper bead process also includes a postweld soak requirement. Performed at 300 degrees Fahrenheit (°F) for 4 hours (P-No. 3 base materials), this postweld soak assists diffusion of any remaining hydrogen from the repair weld. As such, the postweld soak is a hydrogen bake-out and not a postweld heat treatment as defined by the ASME Code. At 300 degrees Fahrenheit, the postweld soak does not stress relieve, temper, or alter the mechanical properties of the weldment in any manner. Since the potential for hydrogen absorption is greatly diminished by the use of gas tungsten arc welding temper bead process, no postweld soak is needed for this application.

The alternative in Attachment 1 establishes detailed welding procedure qualification requirements for base materials, filler metals, restraint, impact properties, and other procedure variables. The qualification requirements provide assurance that the mechanical properties of repair welds shall be equivalent to or superior to those of the surrounding base material.

Hydrogen Cracking

Hydrogen cracking is a form of cold cracking. It is produced by the action of internal tensile stresses acting on low toughness heat affected zones. The internal stresses are produced from localized build-ups of monatomic hydrogen. Monatomic hydrogen forms when moisture or hydrocarbons interact with the welding arc and molten weld pool. The monatomic hydrogen can be entrapped during weld solidification and tends to migrate to transformation boundaries or other microstructure defect locations. As concentrations build, the monatomic hydrogen recombines to form molecular hydrogen – thus generating localized internal stresses at these internal defect locations. If these stresses exceed the fracture toughness of the material, hydrogen induced cracking occurs. This form of cracking requires the presence of hydrogen and low toughness materials. It is manifested by intergranular cracking of susceptible materials and normally occurs within 48 hours of welding.

IWA-4600 establishes elevated preheat and postweld soak requirements. The elevated preheat temperature of 300 degrees Fahrenheit increases the diffusion rate of hydrogen from the weld. The postweld soak at 300 degrees Fahrenheit was also established to bake-out or facilitate diffusion of any remaining hydrogen from the weldment. However, while hydrogen cracking is a concern for shielded metal arc welding (SMAW), which uses flux covered electrodes, the potential for hydrogen cracking is significantly reduced when using machine gas tungsten arc welding.

The machine gas tungsten arc welding process is inherently free of hydrogen. Unlike the shielded metal arc welding process, gas tungsten arc welding filler metals do not rely on flux coverings that may be susceptible to moisture absorption from the environment. Conversely, the gas tungsten arc welding process utilizes dry inert shielding gases that cover the molten weld pool from oxidizing atmospheres. Any moisture on the surface of the component being welded is vaporized ahead of the welding torch. The vapor is prevented from being mixed with the molten weld pool by the inert shielding gas that blows the vapor away before it can be mixed. Furthermore, modern filler metal manufacturers produce wires having very low residual hydrogen. This is important

because filler metals and base materials are the most realistic sources of hydrogen for the automatic or machine gas tungsten arc welding temper bead process. Therefore, the potential for hydrogen-induced cracking is greatly reduced by using the machine gas tungsten arc welding process. Extensive research has been performed by EPRI [reference 7] which provides a technical basis for starting the 48-hour hold after completing the third temper bead weld layer rather than waiting for the weld overlay to cool to ambient temperature. The hold time required by ASME Code Cases N-638-4 and N-740-2 shall be implemented in accordance with this latest research. This approach has been previously reviewed and approved by the NRC for pressurizer nozzle overlays.

Cold Restraint Cracking

Cold cracking generally occurs during cooling at temperatures approaching ambient temperature. As stresses build under a high degree of restraint, cracking may occur at defect locations. Brittle microstructures with low ductility are subject to cold restraint cracking. However, the ambient temperature temper bead process is designed to provide a sufficient heat inventory so as to produce the desired tempering for high toughness. Because the machine gas tungsten arc welding temper bead process provides precision bead placement and control of heat, the toughness and ductility of the heat affected zone is typically superior to the base material. Therefore, the resulting structure shall be appropriately tempered to exhibit toughness sufficient to resist cold cracking.

Area Limitation

IWA-4600 and early versions of ASME Code Case N-638 for temper bead welding contained a limit of 100 square inches for the surface area of temper bead weld over the ferritic base metal. The associated limitation proposed in this alternative is 700 square inches.

EPRI Report NP-1011898, November 2005, [reference 2] describes the technical justification for allowing increased overlay areas up to 500 square inches over ferritic material. The white paper contained in this report notes that the original limit of 100 square inches in ASME Code Case N-638-1 was arbitrary. It cites, within Section 2a of the white paper, evaluations of a 12-inch diameter nozzle weld overlay to demonstrate adequate tempering of the weld heat affected zone residual stress evaluations demonstrating acceptable residual stresses in weld overlays ranging from 100 to 500 square inches per Section 2b of the white paper, and service history in which weld repairs exceeding 100 square inches were NRC approved and applied to dissimilar metal weld nozzles in several BWRs and PWRs as discussed within Section 3c of the white paper. Some of the cited repairs are greater than 15 years old, and have been inspected several times with no evidence of any continued degradation.

Section 5.1, Analyses Conclusions, in EPRI Report NP-1011898, when evaluating the 100 square inch and 500 square inch repair sizes provides the following statement.

> "Results demonstrate that a larger weld repair area does not have a significant adverse effect on the weld residual stress. In some cases, the larger repair area is much more beneficial because of the lower tensile residual stress or higher compressive residual stress. Especially for the case of axial weld repair where an axial crack could exist, the hoop stress is more compressive or less tensile within the weld repair and outside the

repair area. The larger repair area could be less susceptible to the crack growth, due to either stress corrosion or fatigue."

Section 5.2, Overall Conclusions, in EPRI Report NP-1011898, also states that:

"The restriction on surface area for temper bead welding was arbitrary, is overly restrictive, leads to increased cost and dose for repairs and does not contribute to safety."

Additionally, "there is no direct correlation of residual stresses with surface area of the repair either for cavity or overlay repairs done using temper bead welding. Cases have been analyzed up to 500 square inches that verify that residual stresses for cavity repairs are at an acceptable level and that residual stresses associated with weld overlay repairs remain compressive in the weld region for larger area repairs as well a for smaller area repairs."

Due to the outside diameter of the reactor coolant pump piping, the weld overlay repair may extend up to greater than 600 square inches of surface area on the carbon steel component, but less than 700 square inches of surface area. Consequently, the proposed alternative includes a maximum individual weld overlay area requirement of 700 square inches, as discussed within General Requirement A2.2(b) of Attachment 1.

Analyses and Verifications

The following list of analyses and verifications shall be performed subject to the specific design, analysis, and inspection requirements that have been defined in this relief request.

1. Nozzle specific stress analyses shall be performed to establish a residual stress profile in the nozzle. Inside diameter (ID) weld repairs shall be assumed in these analyses to effectively bound any actual weld repairs that may have occurred in the nozzles. The analysis shall then simulate application of the weld overlays to determine the final residual stress profile. Post weld overlay residual stresses at normal operating conditions shall be shown to result in a stress state on the inside surface of each component, that assures that further crack initiation due to primary water stress corrosion cracking is highly unlikely.

2. Fracture mechanics analyses shall be performed to predict crack growth. Crack growth due to primary water stress corrosion cracking and fatigue crack growth in the original dissimilar metal weld shall be evaluated. The crack growth analyses shall consider all design loads and transients, plus the post weld overlay through-wall residual stress distributions, and shall demonstrate that the assumed cracks shall not grow beyond the design bases for the weld overlays (that is, through the original dissimilar metal weld thickness) for the time period until the next scheduled inservice inspection. The crack growth analyses shall determine the time period for the assumed cracks to grow to the design basis for the weld overlays.

3. The analyses shall demonstrate that the application of the weld overlays does not impact the conclusions of the existing nozzle stress reports. ASME Code Section III stress and fatigue criteria shall be met for the regions of the overlays remote from observed (or assumed) cracks.

4. The original leak-before-break calculations will be updated with an evaluation demonstrating that due to the efficacy of the overlay for primary water stress corrosion cracking mitigation, concerns for original weld susceptibility to cracking has been resolved. The effects of the mitigation on the leak-before-break analysis shall be evaluated to show the effects of application of weld overlays do not invalidate the conclusions of the existing design basis.

5. Shrinkage shall be measured during the overlay application. Shrinkage stresses arising from the weld overlays at other locations in the piping systems shall be demonstrated to not have an adverse effect on the systems. Clearances of affected supports and restraints shall be checked after the overlay repair, and shall be reset within the design ranges as required.

6. The total added weight on the piping systems due to the overlays shall be evaluated for potential impact on piping system stresses and dynamic characteristics.

7. The as-built dimension of the weld overlays shall be measured and evaluated to demonstrate that they equal or exceed the minimum design dimensions of the overlays.

Summaries of the results of the analyses listed in Items 1 through 4 above will be submitted to the NRC prior to entry into Mode 4 following completion of the weld overlays. Items 5 though 7 are performed following installation of the weld overlays and results shall be included in the design modification package closure documents. This information shall be available to resident or field inspectors for review as needed.

The following information will be submitted to the NRC within 14 days of completion of the final ultrasonic examination of the overlaid welds. Also included in the results will be a discussion of any repairs to the overlay material and/or base metal and the reason for the repair.

- a listing of indications detected [1]
- the disposition of all indications using the standards of ASME Code Section XI, IWB-3514-2 and/or IWB-3514-3 criteria and, if possible, the type and nature of the indications[2]

Conclusions

Quality and Safety of Proposed Alternative

Implementation of the alternative to IWA-4600 of ASME Code Section XI described in Attachments 1 and 2 of this request shall produce effective repairs for

[1] The recording criteria of the ultrasonic examination procedure to be used for the examination of the Davis-Besse overlays requires that all indications, regardless of amplitude, be investigated to the extent necessary to provide accurate characterization, identity, and location. Additionally, the procedure requires that all indications, regardless of amplitude, that cannot be clearly attributed to the geometry of the overlay configuration be considered flaw indications.

[2] The ultrasonic examination procedure requires that all suspected flaw indications are to be plotted on a cross sectional drawing of the weld and that the plots should accurately identify the specific origin of the reflector.

potential primary water stress corrosion cracking in the identified welds and improve piping geometries to permit ASME Code Appendix VIII ultrasonic examinations as implemented through the PDI program. Weld overlay repairs of dissimilar metal welds have been installed and performed successfully for many years in both pressurized water reactor and boiling water reactor applications. The alternative provides improved structural integrity and reduced likelihood of leakage for the primary system. Accordingly, the use of the alternative provides an acceptable level of quality and safety in accordance with 10 CFR 50.55a(a)(3)(i).

6. Duration of Proposed Alternative

The provisions of this alternative are applicable to the third ten-year in-service inspection interval for Davis-Besse which commenced on September 21, 2000 and will end on September 20, 2012.

The weld overlays installed in accordance with the provisions of this alternative shall remain in place for the design life of the repair established as described in Attachments 1 and 2.

7. References

1. ASME Boiler and Pressure Vessel Code, Section XI, 1995 Edition through 1996 Addenda, Appendix VIII, Supplement 11, "Qualification Requirements for Full Structural Overlaid Wrought Austenitic Piping Welds."

2. EPRI Report 1011898, November 2005, "RRAC Code Justification for the Removal of the 100 Square Inch Temper Bead Weld Limitation", EPRI, Palo Alto, CA, and Structural Integrity Associates, Inc., San Jose, CA.

3. EPRI Report GC-111050, November 1998, "Ambient Temperature Preheat for Machine GTAW Temper bead Applications", EPRI, Palo Alto, CA, and Structural Integrity Associates, Inc., San Jose, CA.

4. ASME Boiler and Pressure Vessel Code, Section XI, 1995 Edition with Addenda through 1996, Appendix VIII, Supplement 10.

5. EPRI Materials Reliability Program Report: Crack Growth Rates for Evaluating PWSCC of Alloy 82, 182, and 132 Welds (MRP-115), EPRI, Palo Alto, CA, and Dominion Engineering, Inc., Reston, VA: November 2004. 1006696.

6. ASME Code Case N-740-2 "Dissimilar Metal Weld Overlay for Repair or Mitigation of Class 1, 2, and 3 Items".

7. EPRI Report 1013558, Temperbead Welding Applications, 48 Hour Hold Requirements for Ambient Temperature Temperbead Welding, EPRI, Palo Alto, CA and Hermann & Associates, Key Largo, FL, December 2006.

8. EPRI Materials Reliability Program Report: Technical Basis for Preemptive Weld Overlays for Alloy 82/182 Butt Welds in PWRs (MRP-169), Revision 1, EPRI, Palo Alto, CA and Structural Integrity Associates, Inc., San Jose, CA; June 2008, 1016602.

9. G. Wilkowski, H. Xu, D. J. Shim, and D. Rudland, "Determination of the Elastic-Plastic Fracture Mechanics Z-factor for Alloy 82/182 Weld Metal Flaws for Use in the ASME Section XI Appendix C Flaw Evaluation Procedures," PVP2007-26733, Proceedings of ASME-PVP 2007: 2007 ASME Pressure Vessels and Piping Division Conference, San Antonio, TX, 2007.

10. NUREG/CR-4082, Volume 8, "Summary of Technical Results and Their Significance to Leak-Before-Break and In-Service Flaw Acceptance Criteria, March 1984-January 1989.

11. A.F. Deardorff et al, "Net Section Plastic Collapse Analysis of Two-Layered Materials and Application To Weld Overlay Design", ASME PVP 2006 Pressure Vessels and Piping Division Conference, Vancouver, Canada, July 2006, PVP2006-ICPVT11-93454.

12. W. Hübner, B. Johansson, and M. de Pourbaix, Studies of the Tendency to Intergranular Stress Corrosion Cracking of Austenitic Fe-Cr-Ni Alloys in High Purity Water at 300°C, Studsvik report AE-437, Nykoping, Sweden, 1971.

13. W. Debray and L. Stieding, Materials in the Primary Circuit of Water-Cooled Power Reactors, International Nickel Power Conference, Lausanne, Switzerland, May 1972, Paper No. 3.

14. C. Amzallag, et al., "Stress Corrosion Life Assessment of 182 and 82 Welds used in PWR Components," Proceedings of the 10th International Symposium on Environmental Degradation of Materials in Nuclear Power Systems - Water Reactors, NACE, 2001.

15. NUREG/CR-6907, "Crack Growth Rates of Nickel Alloy Welds in a PWR Environment," U.S. Nuclear Regulatory Commission (Argonne National Laboratory), May 2006.

16. EPRI Material Reliability Program Report: Primary System Piping Butt Weld Inspection and Evaluation Guidelines (MRP-139), EPRI, Palo Alto, CA: August 2005. 1010087.

17. ASME Code Case N-638-1 "Similar and Dissimilar Metal Welding Using Ambient Temperature GTAW Temper Bead Technique"

18. ASME Code Case N-638-2 "Similar and Dissimilar Metal Welding Using Ambient Temperature GTAW Temper Bead Technique"

19. ASME Code Case N-638-3 "Similar and Dissimilar Metal Welding Using Ambient Temperature GTAW Temper Bead Technique"

20. ASME Code Case N-638-4 "Similar and Dissimilar Metal Welding Using Ambient Temperature GTAW Temper Bead Technique"

21. ASME Code Case N-504-2 "Alternative Rules for Repair if Classes 1, 2, and 3 Austenitic Stainless Steel Piping"

22. ASME Code Case N-504-3 "Alternative Rules for Repair if Classes 1, 2, and 3 Austenitic Stainless Steel Piping"

23. ASME Code Case N-770 "Alternative Examination Requirements and Acceptance Standards for Class 1 PWR Piping and Vessel Nozzle Butt Welds Fabricated With UNS N06082 or UNS W86182 Weld Filler Material With or Without Application of Listed Mitigation Activities"

24. D. Buisine, et al., "PWSCC Resistance of Nickel Based Weld Metals with Various Chromium Contents," Proceedings: 1994 EPRI Workshop on PWSCC of Alloy 600 in PWRs, EPRI, Palo Alto, CA: 1995. TR-105406, Paper D5.

PROPOSED ALTERNATIVE FOR DAVIS-BESSE RPV NOZZLE AND REACTOR COOLANT PUMP DISSIMILAR METAL WELD OVERLAYS

A1.1 INTRODUCTION

FENOC proposes the following detailed requirements for the design, analysis, fabrication, examination, and pressure testing of the Davis-Besse reactor pressure vessel core flood and cold leg drain line nozzle dissimilar metal weld overlays and reactor coolant pump inlet and discharge dissimilar metal weld overlays. These requirements, which are derived from applicable portions of ASME Code Case N-740-2, provide an acceptable methodology for reducing potential defects in these austenitic nickel alloy welds to an acceptable size or mitigating the potential for future primary water stress corrosion cracking by increasing the wall thickness through deposition of weld overlays. The weld overlays shall be applied by deposition of weld reinforcement (weld overlay) on the outside surface of the piping, nozzles, and associated dissimilar metal welds, including ferritic materials when necessary, in accordance with the following requirements:

A1.2 GENERAL REQUIREMENTS

A1.2.1 Definitions

(a) **full structural weld overlay.** deposition of weld reinforcement on the outside diameter of the piping, component, or associated weld, such that the weld reinforcement is capable of supporting the design loads, without consideration of the piping, component, or associated weld beneath the weld reinforcement. Full structural weld overlay can be either mitigative or repair weld overlay as defined in A1.2.1(b) and (c).

(b) **mitigative weld overlay.** weld overlay that is applied over material with no inside-surface-connected flaws found during an examination performed in accordance with A1.3(a)(3), prior to the weld overlay being applied

(c) **repair weld overlay.** weld overlay that is applied over material with an inside-surface-connected flaw or subsurface defect, or where a pre-weld overlay examination is not performed

(d) **SCC susceptible materials**. for this proposed alternative, the stress-corrosion-cracking (SCC) susceptible materials are Unified Numbering System (UNS) N06600, N06082, or W86182 in pressurized water reactor environments; or UNS N06600, W86182, or austenitic stainless steels and associated welds in boiling water reactor environments.

A1.2.2 General Overlay Requirements

(a) A full-structural weld overlay shall be applied by deposition of weld reinforcement (weld overlay) on the outside surface of circumferential welds. This proposed method applies to austenitic nickel alloy and austenitic stainless steel welds between the following:
P-No. 8 or P-No. 43 and P-Nos. 1, 3, 12A, 12B, or 12C
P-No. 8 and P-No. 43
Between P-Nos. 1, 3, 12A, 12B, and 12C materials

(b) If a weld overlay on any of the material combinations in A1.2.2(a) obstructs a required examination of an adjacent P-No. 8 to P-No. 8 weld, the overlay may be extended to include overlaying the adjacent weld.

(c) Weld overlay filler metal shall be austenitic nickel alloy (28 percent chromium minimum, ERNiCrFe-7/7A) meeting the requirements of 1.2(e)(1) or (2), as applicable, applied 360 degrees around the circumference of the item and deposited using a Welding Procedure Specification (WPS) for groove welding, qualified in accordance with the Construction Code and Owner's Requirements identified in the Repair/Replacement Plan. As an alternative to the post weld heat treatment (PWHT) requirements of the Construction Code and Owner's requirements, ambient-temperature temper bead welding in accordance with A2.1 shall be used.

(d) Prior to deposition of the weld overlay, the surface to be weld overlaid shall be examined using the liquid penetrant method. Indications with major dimensions greater than 1/16 inch (1.5 millimeters) shall be removed, reduced in size, or weld repaired in accordance with the following requirements:

(1) One or more layers of weld metal shall be applied to seal unacceptable indications in the area to be repaired with or without excavation. The thickness of these layers shall not be used in meeting weld reinforcement design thickness requirements. Peening the unacceptable indication prior to welding is permitted.

(2) If weld repair of indications identified in A1.2.2(d) is required, the area where the weld overlay is to be deposited, including any local weld repairs or initial weld overlay layer, shall be examined by the liquid penetrant method. The area shall contain no indications with major dimensions greater than 1/16 inch (1.5 millimeters) prior to application of the structural layers of the weld overlay.

(3) To reduce the potential of hot cracking when applying an austenitic nickel alloy over P-No. 8 base metal, it is permissible to apply a layer or multiple layers of austenitic stainless steel filler material over the austenitic stainless steel base metal. The stainless steel filler metal shall have a delta ferrite content of 5 – 15 Ferrite Number (FN), as reported on the Certified Material Test Report. The thickness of these buffer layers shall not be used in meeting weld reinforcement design thickness requirements.

(e) Weld overlay deposits shall meet the following requirements:

(1) The austenitic stainless steel weld overlay shall consist of at least two weld layers having as-deposited delta ferrite content of at least 7.5 FN. The first layer of weld metal with delta ferrite content of at least 7.5 FN shall constitute the first layer of the weld reinforcement that may be credited toward the required thickness. Alternatively, layers of at least 5 FN are acceptable, provided the carbon content of the deposited weld metal is determined by chemical analysis to be less than 0.02 percent.

(2) The austenitic nickel alloy weld overlay shall consist of at least two weld layers deposited using a filler material with a chromium (Cr) content of at least 28 percent. The first layer of weld metal deposited may not be credited toward the required thickness except that a first diluted layer may be credited toward the required thickness, provided the portion of the layer over the austenitic base material, austenitic filler material weld, and the associated dilution zone from an adjacent ferritic base material contain at least 24 percent Cr, and the Cr content of the deposited weld metal is determined by chemical analysis of the production weld or of a representative coupon taken from a mockup prepared in accordance with the weld procedure for the production weld.

(f) This case is only for welding in applications predicted not to have exceeded thermal neutron ($E < 0.5$ eV) fluence of 1×10^{17} neutrons per cm^2 prior to welding.

(g) A new weld overlay shall not be installed over the top of an existing weld overlay that has been in service.

A1.3 CRACK GROWTH AND DESIGN

(a) Crack Growth Calculation of Flaws in the Original Weld or Base Metal. The size of all flaws detected or postulated in the original weld or base metal shall be used to define the life of the overlay. The inspection interval shall not be longer than the shorter of the life of the overlay or the period specified in A1.4(c). Crack growth due to both stress corrosion and fatigue, shall be evaluated. Flaw characterization and evaluation shall be based on the examination results or postulated flaw, as described below. If the flaw is at or near the boundary of two different materials, evaluation of flaw growth in both materials is required.

(1) For repair overlays, the initial flaw size for crack growth in the original weld or base metal shall be based on the as-found flaw or postulated flaw, if no pre-overlay examination is performed.

(2) For postulated flaws, the axial flaw length shall be 1.5 inches (38 millimeters) or the combined width of the weld plus buttering plus any adjacent SCC susceptible material, whichever is greater. The circumferential flaw length shall be assumed to be 360 degrees. The depths associated with these lengths are specified in A1.3(a)(3) and A1.3(a)(4).

(3) If an Appendix VIII, Supplement 10, or Supplement 2, as applicable, ultrasonic examination is performed prior to application of the overlay, and no inside-surface-connected planar flaws are discovered, initial flaws originated from the inside surface of the weldment equal to 10 percent of the original wall thickness shall be assumed in both the axial and circumferential directions, and the overlay shall be considered mitigative.

(4) If an Appendix VIII, Supplement 10, or Supplement 2, as applicable, ultrasonic examination is not performed prior to application of the overlay, initial inside-surface-connected planar flaws equal to at least 75 percent through the original wall thickness shall be assumed, in both the axial and circumferential directions, and the overlay shall be considered a repair. For cast austenitic stainless steel (CASS) items, a 100 percent through-wall flaw shall be assumed unless the subsequent inservice inspection schedule is modified as discussed in A1.4(c)(4).

(5) There may be circumstances in which an overlay examination is performed using an ultrasonic examination procedure qualified in accordance with Appendix VIII, Supplement 11 for depths greater than the outer 25 percent of the original wall thickness (Fig. A1-2). For such cases, the initial flaw depths are assumed to be the detected depth found by the Appendix VIII, Supplement 11 qualified examination, plus the postulated worst-case flaw in the region not covered by the Appendix VIII ultrasonic examination.

(6) In determining the life of the overlay, any inside-surface-connected planar flaw found by the overlay preservice inspection of A1.4(b) that exceeds the depth of (3), (4), or (5) above shall be used as part of the initial flaw depth. The initial flaw depth assumed is the detected flaw depth plus the postulated worst-case flaw depth in the region of the pipe wall thickness that was not examined using an ultrasonic examination procedure meeting Appendix VIII for that region. An overlay meeting this condition shall be considered a repair, rather than mitigation.

(b) Structural Design and Sizing of the Overlay. The design of the weld overlay shall satisfy the following, using the assumptions and flaw characterization requirements in A1.3(a). The following design analysis shall be completed in accordance with IWA-4311:

(1) The axial length and end slope of the weld overlay shall cover the weld and heat-affected zones on each side of the weld, as well as any stress corrosion cracking susceptible base material adjacent to the weld, and provide for load redistribution from the item into the weld overlay and back into the item without violating applicable stress limits of NB-3200. Any laminar flaws in the weld overlay shall be evaluated in the analysis to ensure that load redistribution complies with the above.

These requirements are usually satisfied if the weld overlay full thickness length extends axially beyond the SCC-susceptible material or projected flaw by at least $0.75\sqrt{Rt}$, where R is the outer radius of the item and t is the nominal wall thickness of the item at the applicable side of the overlay (that is, R and t of the nozzle on the nozzle side and R and t of the safe-end on the safe-end side).

(2) Unless specifically analyzed in accordance with A1.3(b)(1), the end transition slope of the overlay shall not exceed 30 degrees.

(3) The assumed flaw in the underlying base material or weld shall be based on the limiting case of A1.3(b)(3)(a) and (b) that results in the larger required overlay thickness.

(a) 100 percent through-wall circumferential flaw for the entire circumference

(b) 100 percent through-wall flaw with length of 1.5 inches (38 millimeters), or the combined width of the weld plus buttering plus any SCC-susceptible material, whichever is greater, in the axial direction

(4) The overlay design thickness shall be verified, using only the weld overlay thickness conforming to the deposit analysis requirements of A1.2.2(e). The combined wall thickness at the weld overlay, any postulated worst-case planar flaws under the laminar flaws in the weld overlay, and the effects of any discontinuity (for example, another weld overlay or reinforcement for a branch connection) within a distance of $2.5\sqrt{Rt}$, from the toes of the weld overlay, including the flaw size assumptions defined in A1.3(b)(3) above, shall be evaluated and shall meet the requirements of IWB-3640, IWC-3640, or IWD-3640, as applicable.

(5) The effects of any changes in applied loads, as a result of weld shrinkage from the entire overlay, on other items in the piping system (for example, support loads and clearances, nozzle loads, and changes in system flexibility and weight due to the weld overlay) shall be evaluated. Existing flaws previously accepted by analytical evaluation shall be evaluated in accordance with IWB-3640, IWC-3640, or IWD-3640, as applicable.

A1.4 EXAMINATION

In lieu of all other examination requirements, the examination requirements of this proposed method shall be met for the life of the overlay. Nondestructive examination methods shall be in accordance with IWA-2200, except as specified herein. Nondestructive examination personnel shall be qualified in accordance with IWA-2300. Ultrasonic examination procedures and personnel shall be qualified in accordance with the modified requirements to ASME Code Section XI, Appendix VIII, Supplement 11 as described in Attachment 2. The examination shall be performed to the maximum extent practicable, for axial and circumferential flaws. If 100 percent coverage of the required volume for axial flaws cannot be achieved, but essentially 100 percent coverage for circumferential flaws (100 percent of the susceptible volume) can be achieved, the examination for axial flaws shall be performed to achieve the maximum coverage practicable, with limitations noted in the examination report. The examination coverage requirements shall be considered to be met. For welds containing cast stainless steel materials the examination volume includes only the susceptible material (non-stainless steel) volume.

(a) Acceptance Examination

(1) The weld overlay shall have a surface finish of 250 micro-inches (μin), 6.3 micrometer (μm) roughness measurement system (RMS) or better and contour that permits ultrasonic examination in accordance with procedures qualified in accordance with ASME Code Section XI, Appendix VIII. The weld overlay shall be inspected to verify acceptable configuration.

(2) The weld overlay and the adjacent base material for at least 1/2 inch (13 millimeters) from each side of the overlay shall be examined using the liquid penetrant method. The weld overlay shall satisfy the surface examination acceptance criteria for welds of the Construction Code or NB-5300. The adjacent base material shall satisfy the surface examination acceptance criteria for base material of the Construction Code or NB-2500. If ambient temperature temper bead welding is performed, the liquid penetrant examination of the completed weld overlay shall be conducted no sooner than 48 hours following completion of the three tempering layers over the ferritic steel.

(3) The examination volume A-B-C-D in Figure A1-1(a) shall be ultrasonically examined to assure adequate fusion (that is, adequate bond) with the base material and to detect welding flaws, such as interbead lack of fusion, inclusions, or cracks. The interface C-D shown between the overlay and weld includes the bond and heat- affected zone from the overlay. If ambient temperature temper bead welding is performed, the ultrasonic examination shall be conducted no sooner than 48 hours following completion of the three tempering layers over the ferritic steel. Planar flaws detected in the weld overlay acceptance examination shall meet the preservice examination standards of IWB-3514. In applying the acceptance standards to planar indications, the thickness, t_1 or t_2 defined in Figure A1-1(b) shall be used as the nominal wall thickness in IWB-3514, provided the base material beneath the flaw (that is, safe end, nozzle, or piping material) is not susceptible to stress corrosion cracking. For susceptible material, t_1 shall be used. If a flaw in the overlay crosses the boundary between the two regions, the more conservative of the two dimensions (t_1 or t_2) shall be used. Laminar flaws in the weld overlay shall meet the following requirements:

(a) The acceptance standards of IWB-3514 shall be met, with the additional limitation that the total laminar flaw area shall not exceed 10 percent of the weld surface area and that no linear dimension of the laminar flaw area shall exceed the greater of 3 inches (76 millimeters) or 10 percent of the pipe circumference.

(b) For examination volume A-B-C-D in Figure A1-1(a), the reduction in coverage due to laminar flaws shall be less than 10 percent. The uninspectable volume is the volume in the weld overlay underneath the laminar flaws for which coverage cannot be achieved with the angle beam examination method.

(c) Any uninspectable volume in the weld overlay shall be assumed to contain the largest radial planar flaw that could exist within that volume. This assumed flaw shall meet the preservice examination acceptance standards of IWB-3514, with nominal wall thickness as defined above the planar flaws. Alternatively, the assumed flaw shall be evaluated and meet the requirements of IWB-3640, IWC-3640, and IWD-3640, as applicable. Both axial and circumferential planar flaws shall be assumed.

(4) After completion of all welding activities, VT-3 visual examination shall be performed on all affected restraints, supports, and snubbers, to verify that design tolerances are met.

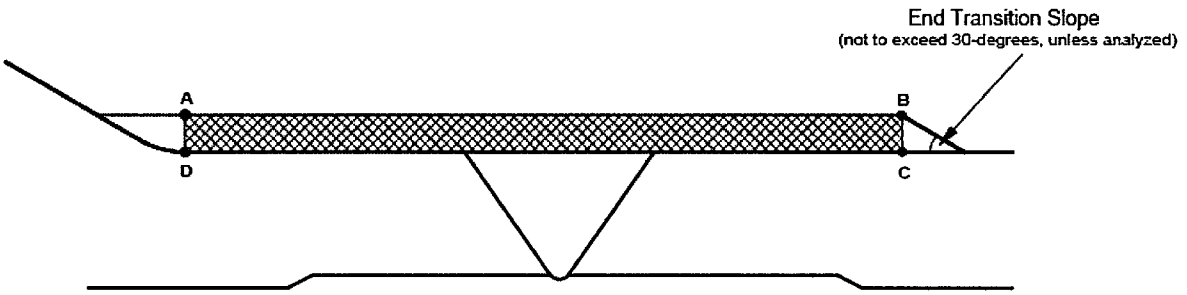

(a) Examination Volume A–B–C–D

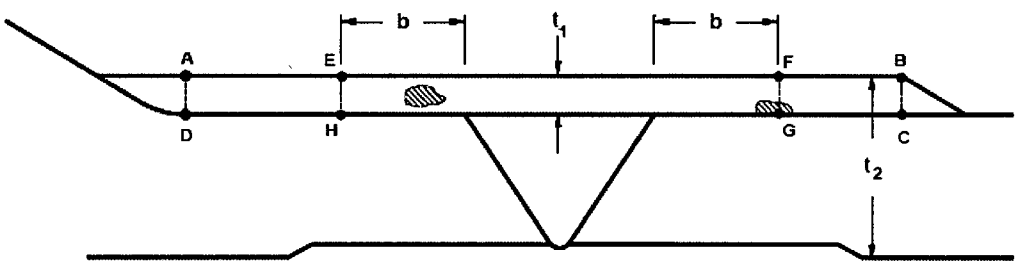

(b) Thickness (t_1 and t_2) for Table IWB-3514-2

Notes:

1 Dimension b is equivalent to the nominal thickness of the nozzle or pipe being overlaid, as appropriate.

2 The nominal wall thickness is t_1 for flaws in E-F-G-H, and t_2 for flaws in A-E-H-D or F-B-C-G.

3 For flaws that span two examination volumes (such as illustrated at F-G), the t_1 thickness shall be used.

4 The weld includes the nozzle or safe end butter, where applied, plus any stress corrosion cracking susceptible base material in the nozzle.

Figure A1-1 Examination Volume and Thickness Definitions

(b) Preservice Inspection

(1) The examination volume in Fig. A1-2 shall be ultrasonically examined. The angle beam shall be directed perpendicular and parallel to the piping axis, with scanning performed in four directions, to locate and size any planar flaw that have propagated into the outer 25 percent of the base metal thickness or into the weld overlay. For weld overlays on cast austenitic stainless steel base materials, if a 100 percent through-wall flaw is used for crack growth, only planar flaws that have propagated into the weld overlay, or are in the overlay, are required to be located and sized.

(2) The preservice examination acceptance standards of IWB-3514 shall be met for the weld overlay. In applying the acceptance standards to planar indications, the thickness, t_1 or t_2, defined in Fig. A1-1(b) shall be used as the nominal wall thickness in IWB-3514, provided the base material beneath the flaw (that is, safe end, nozzle, or piping material) is not susceptible to SCC. For susceptible material, t_1 shall be used. Planar flaws in the outer 25 percent of the base metal thickness shall meet the design analysis requirements of A1.3(b).

(3) The flaw evaluation requirements of IWB-3640, IWC-3640, or IWD-3640 shall not be applied to planar flaws, identified during preservice examination, that exceed the preservice examination acceptance standards of IWB-3514.

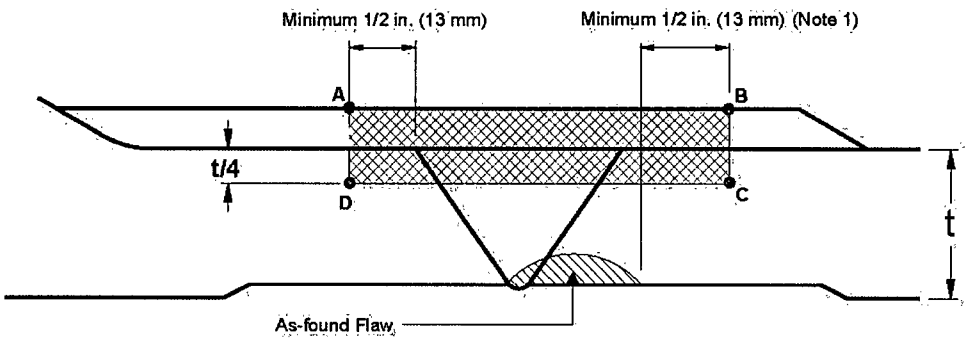

Examination Volume A–B–C–D

Notes:

1 The weld includes the nozzle or safe end butter, where applied.

2 For axial or circumferential flaws, the axial extent of the examination volume shall extend at least ½ inch (13 millimeters) beyond the as-found flaw and at least ½ inch (13 millimeters) beyond the toes of the original weld, including weld end butter, where applied.

Figure A1-2 Preservice and Inservice Examination Volume

(c) Inservice Inspection

(1) For welds whose pre-overlay examination, post-overlay acceptance examination, or preservice examination did not reveal any planar flaws, the welds shall be placed into a population of full structural weld overlays to be examined on a sample basis. Twenty-five (25) percent of this population shall be added to the ISI Program and shall be examined once each inspection interval. If multiple welds are mitigated in the same inspection period, examinations shall be spread throughout years 3 through 10 following application, similar to provisions in IWB-2412(b). The 25 percent sample shall consist of the same welds in the same sequence during successive intervals to the extent practical provided the 25 percent sample contains welds that experience the hottest operating temperature in the population. If hot leg and cold leg welds are included in the population, the 25 percent sample does not need to include the cold leg welds. All weld overlays, including those not in the 25 percent sample, shall be examined prior to the end of their design life as determined in A1.3(a).

(2) For welds whose pre-overlay examination, post-overlay acceptance examination, or preservice examination reveal planar flaws, or for which a pre-overlay examination was not performed, the weld overlay shall be ultrasonically examined during the first or second refueling outage following application. Examination volumes that show no indication of crack growth or new cracking shall then be placed into a population of full structural weld overlays to be examined on a sample basis. Twenty-five (25) percent of this population shall be added to the ISI Program in accordance with IWB-2412(b). The 25 percent sample shall consist of the same welds in the same sequence during successive intervals to the extent practical provided the 25 percent sample contains welds that experience the hottest operating temperature in the population. If hot leg and cold leg welds are included in the population, the 25 percent sample does not need to include the cold leg welds. All weld overlays, including those not in the 25 percent sample, shall be examined prior to the end of their design life as determined in A1.3(a).

(3) The weld overlay examination volume in Fig. A1-2 shall be ultrasonically examined to determine if any new or existing planar flaws have propagated into the outer 25 percent of the base material thickness or into the overlay. The angle beam shall be directed perpendicular and parallel to the piping axis, with scanning performed in four directions.

(4) For cast stainless steel items, the required examination volume shall be examined to the maximum extent practical including 100 percent of the susceptible material volume (non-stainless steel volume). If 100 percent of the susceptible material volume is examined both before and after mitigation, and no inside surface connected planar flaws are detected, the inspection frequency of (1) above for uncracked items is applicable. If 100 percent of the susceptible material is not examined in the pre and post mitigation volume examinations, the inspection frequency of (2) above for cracked items shall be applied with the following exceptions:

(a) The inspection of the mitigated weld shall not be credited to satisfy the requirement of the 25 percent inspection sample every inspection interval. The mitigated weld shall be inspected each inspection interval.

(b) If the required examination volume, including 100 percent of the susceptible material volume, is subsequently examined using a qualified ultrasonic examination and no planar flaws are detected, the weld may be placed in the 25 percent inspection sample population as noted in (2) above.

(5) The weld overlay shall meet the inservice examination acceptance standards of IWB-3514. In applying the acceptance standards to planar indications, the thickness, t_1 or t_2, defined in Fig. A1-1(b) shall be used as the nominal wall thickness in IWB-3514, provided the base material beneath the flaw (that is, safe end, nozzle, or piping material) is not susceptible to SCC. For susceptible material, t_1 shall be used. If the acceptance standards of IWB-3514 cannot be met, the weld overlay shall meet the acceptance standards of IWB-3600, IWC-3600, or IWD-3600, as applicable. If a planar flaw is detected in the outer 25 percent of the base material thickness shall meet the design analysis requirements of A1.3. Any indication characterized as stress corrosion cracking in the weld overlay material is unacceptable.

(6) If inservice examinations reveal planar flaw growth, or new planar flaws, meeting the acceptance standards of IWB-3514, IWB-3600, IWC-3600, or IWB-3600, the weld overlay examination volume shall be reexamined during the first or second refueling outage following discovery of the growth or new flaws.

(7) For weld overlay examination volumes with unacceptable indications in accordance with A1.4(c)(5), the weld overlay and original defective weld shall be removed. A repair/replacement activity shall be performed in accordance with IWA-4000.

(d) Additional Examinations. If inservice examinations reveal a defect, in accordance with A1.4(c)(4), planar flaw growth into the weld overlay design thickness, or axial flaw growth beyond the specified examination volume, additional weld overlay examination volumes, equal to the number scheduled for the current inspection period, shall be examined prior to return to service. If additional defects are found in the second sample, 50 percent of the total population of weld overlay examination volumes shall be examined prior to return to service. If additional defects are found, the entire remaining population of weld overlay examination volumes shall be examined prior to return to service.

A1.5 PRESSURE TESTING

A system leakage test shall be performed in accordance with IWA-5000.

A1.6 DOCUMENTATION

Use of this proposed method shall be documented on Form NIS-2.

A2.1 AMBIENT-TEMPERATURE TEMPER BEAD WELDING

A2.2 GENERAL REQUIREMENTS

(a) This Attachment applies to dissimilar austenitic filler metal welds between P-Nos. 1, 3, 12A, 12B, and 12C materials and their associated welds and welds joining P- No. 8 or 43 materials to P-Nos. 1, 3, 12A, 12B, and 12C materials with the following limitation. This Attachment shall not be used to repair SA-302 Grade B material unless the material has been modified to include from 0.4 percent to 1.0 percent nickel, quenching, tempering, and application of a fine grain practice.

(b) The maximum area of an individual weld overlay based on the finished surface over the ferritic base material may be greater than 600 square inches (390, 000 square millimeters), but less than 700 square inches (455,000 square millimeters).

(c) Repair/replacement activities on a dissimilar-metal weld in accordance with this Attachment are limited to those along the fusion line of a nonferritic weld to ferritic base material on which 1/8 inch (3 millimeters) or less of nonferritic weld deposit exists above the original fusion line.

(d) If a defect penetrates into the ferritic base material, repair of the base material, using a nonferritic weld filler material, may be performed in accordance with this Attachment, provided the depth of repair in the base material does not exceed ⅜ inch (10 millimeters).

(e) Prior to welding, the area to be welded and a band around the area of at least 1½ times the component thickness or 5 inches (130 millimeters), whichever is less, shall be at least 50 degrees Fahrenheit (10 degrees Celsius).

(f) Welding materials shall meet the Owner's Requirements and the Construction Code and Cases specified in the Repair/Replacement Plan. Welding materials shall be controlled so that they are identified as acceptable until consumed.

(g) Peening may be used, except on the initial and final layers.

A2.3 WELDING QUALIFICATIONS

The welding procedures and operators shall be qualified in accordance with ASME Code Section IX and the requirements of A2.3.1 and A2.3.2.

A2.3.1 Procedure Qualification

(a) The base materials for the welding procedure qualification shall be of the same P-Number and Group Number as the materials to be welded. The materials shall be postweld heat treated to at least the time and temperature that was applied to the materials being welded.

(b) The maximum interpass temperature for the first three layers of the test assembly shall be 150 degrees Fahrenheit (66 degrees Celsius).

(c) The weld overlay shall be qualified using groove weld coupon. The test assembly groove depth shall be at least 1 inch (25 millimeters). The test assembly thickness shall be at least twice the test

assembly groove depth. The test assembly shall be large enough to permit removal of the required test specimens. The test assembly dimensions on either side of the groove shall be at least 6 inches (150 millimeters). The qualification test plate shall be prepared in accordance with Figure A2-1.

(d) Ferritic base material for the procedure qualification test shall meet the impact test requirements of the Construction Code and Owner's Requirements. If such requirements are not in the Construction Code and Owner's Requirements, the impact properties shall be determined by Charpy V-notch impact tests of the procedure qualification base material at or below the lowest service temperature of the item to be repaired. The location and orientation of the test specimens shall be similar to those required in A2.3.1(e) but shall be in the base metal.

(e) Charpy V-notch tests of the ferritic heat-affected zone (HAZ) shall be performed at the same temperature as the base metal test of A2.3.1(d). Number, location, and orientation of test specimens shall be as follows:

(1) The specimens shall be removed from a location as near as practical to a depth of one-half the thickness of the deposited weld metal. The coupons for HAZ impact specimens shall be taken transverse to the axis of the weld and etched to define the HAZ. The notch of the Charpy V-notch specimen shall be cut approximately normal to the material surface in such a manner as to include as much HAZ as possible in the resulting fracture.

(2) If the material thickness permits, the axis of a specimen shall be inclined to allow the root of the notch to be aligned parallel to the fusion line.

(3) If the test material is in the form of a plate or forging, the axis of the weld shall be oriented parallel to the principal direction of rolling or forging.

(4) The Charpy V-notch test shall be performed in accordance with SA-370. Specimens shall be in accordance with SA-370, Figure 11, Type A. The test shall consist of a set of three full-size 10 millimeters by 10 millimeters specimens. The lateral expansion, percent shear, absorbed energy, test temperature, orientation, and location of all test specimens shall be reported in the Procedure Qualification Record.

(f) The average lateral expansion value of the three HAZ Charpy V-notch specimens shall be equal to or greater than the average lateral expansion value of the three unaffected base metal specimens. However, if the average lateral expansion value of the HAZ Charpy V-notch specimens is less than the average value for the unaffected base metal specimens and the procedure qualification meets all other requirements of this Attachment, either of the following shall be performed:

(1) The welding procedure shall be requalified.

(2) An Adjustment Temperature for the procedure qualification shall be determined in accordance with the applicable provisions of Paragraph NB-4335.2 of Section III, 2001 Edition with the 2002 Addenda of the ASME Code. The reference nil-ductility temperature (RT_{NDT}) or lowest service temperature of the materials for which the welding procedure will be used shall be increased by a temperature equivalent to that of the Adjustment Temperature.

A2.3.2 Performance Qualification

Welding operators shall be qualified in accordance with ASME Code Section IX.

A2.4 WELDING PROCEDURE REQUIREMENTS

The welding procedure shall include the following requirements:

(a) The weld metal shall be deposited by the automatic or machine gas tungsten arc welding process.

(b) Dissimilar metal welds shall be made using A-No. 8 weld metal (QW-442) for P-No. 8 to P-No. 1, 3, or 12 (A, B, or C) weld joints or F-No. 43 weld metal (QW-432) for P-No. 8 or 43 to P-No. 1, 3, or 12 (A, B, or C) weld joints.

(c) The area to be welded shall be buttered with a deposit of at least three layers to achieve at least 1/8 inch (3 millimeters) overlay thickness with the heat input for each layer controlled to within ±10 percent of that used in the procedure qualification test. The heat input of the first three layers shall not exceed 45 kilojoule [kJ]/inch or 1.8 kJ/millimeter under any conditions. Particular care shall be taken in the placement of the weld layers of the austenitic overlay filler material at the toe of the overlay to ensure that the heat affected zone and ferritic base metal are tempered. Subsequent layers shall be deposited with a heat input not exceeding that used for layers beyond the third layer in the procedure qualification.

(d) The maximum interpass temperature for field applications shall be 350 degrees Fahrenheit (180 degrees Celsius) for all weld layers regardless of the interpass temperature used during qualification. The interpass temperature limitation of QW-406.3 need not be applied.

(e) The interpass temperature shall be determined as follows:

(1) temperature measurement (for example, pyrometers, temperature-indicating crayons, and thermocouples) during welding. If direct measurement is impractical, interpass temperature shall be determined in accordance with A2.4(e)(2) or (3).

(2) heat-flow calculations, using at least the variables listed below

- *(a)* welding heat input
- *(b)* initial base material temperature
- *(c)* configuration, thickness, and mass of the item being welded
- *(d)* thermal conductivity and diffusivity of the materials being welded
- *(e)* arc time per weld pass and delay time between each pass
- *(f)* arc time to complete the weld

(3) measurement of the maximum interpass temperature on a test coupon that is no thicker than the item to be welded. The maximum heat input of the welding procedure shall be used in welding the test coupon.

(f) Particular care shall be given to ensure that the weld region is free of all potential sources of hydrogen. The surfaces to be welded, filler metals, and shielding gas shall be suitably controlled.

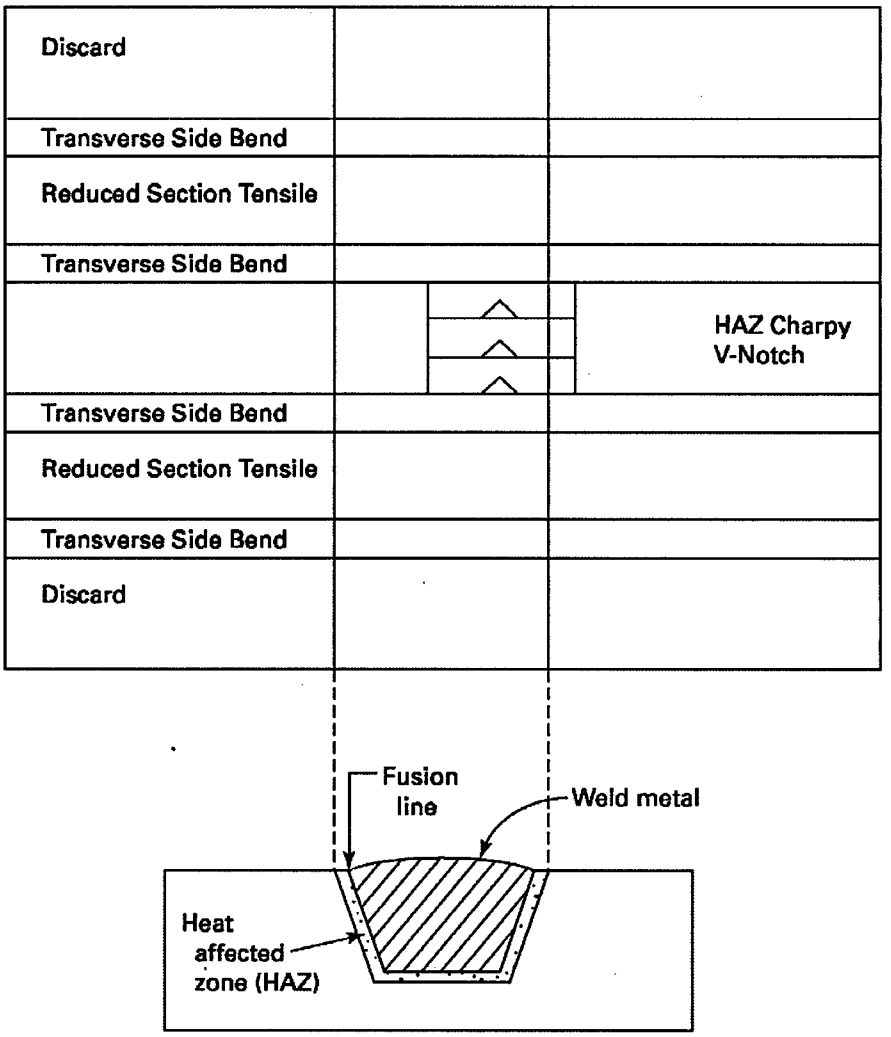

Note:
Base metal Charpy impact specimens are not shown. This figure illustrates a similar-metal weld.

Figure A2-1 Qualification Test Plate

PROPOSED CHANGES TO ASME CODE SECTION XI APPENDIX VIII FOR COMPATIBILITY WITH THE PERFORMANCE DEMONSTRATION INITIATIVE PROGRAM

SUPPLEMENT 11 - QUALIFICATION REQUIREMENTS FOR FULL STRUCTURAL OVERLAID WROUGHT AUSTENITIC PIPING WELDS	PDI PROGRAM: The Proposed Alternative to Supplement 11 Requirements
	Title Alternative: "Qualification Requirements for Overlaid Wrought Austenitic Piping Welds: **Basis:** *The title was clarified to be applicable for all overlays on wrought austenitic piping welds. The specific qualification shall detail the range of qualification.*
1 0 SPECIMEN REQUIREMENTS	
1.1 General. The specimen set shall conform to the following requirements.	
(b) The specimen set shall consist of at least three specimens having different nominal pipe diameters and overlay thicknesses. They shall include the minimum and maximum nominal pipe diameters for which the examination procedure is applicable. Pipe diameters within a range of 0.9 to 1.5 times a nominal diameter shall be considered equivalent. If the procedure is applicable to pipe diameters of 24-inch or larger, the specimen set must include at least one specimen 24-inch or larger but need not include the maximum diameter. The specimen set must include at least one specimen with overlay thickness within minus 0.1 inch to plus 0.25 inch of the maximum nominal overlay thickness for which the procedure is applicable.	**Alternative:** (b) The specimen set shall include specimens with overlays not thicker than 0.1 inch more than the minimum thickness, nor thinner than 0.25 inch of the maximum nominal overlay thickness for which the examination procedure is applicable. **Basis:** *To avoid confusion, the overlay thickness tolerance contained in the last sentence was reworded and the phrase "and the remainder shall be alternative flaws" was added to the next to last sentence in paragraph 1.1(d)(1).*
(d) Flaw Conditions	
(1) Base metal flaws. All flaws must be cracks in or near the approximate butt weld heat-affected zone, open to the inside surface, and extending at least 75 percent through the base metal wall. Flaws may extend 100 percent through the base metal and into the overlay material; in this case, intentional overlay fabrication flaws shall not interfere with ultrasonic detection or characterization of the cracking. Specimens containing IGSCC shall be used when available.	**Alternative:** (1) ... must be in or... extending at least 50 percent through...intentional overlay fabrication flaws shall not interfere with ultrasonic detection or characterization of the base metal flaws. Specimens containing intergranular stress corrosion cracking shall be used when available. At least 70 percent of the flaws in the detection and sizing tests shall be cracks and the remainder shall be alternative flaws. Alternative flaw mechanisms, if used, shall provide crack-like reflective characteristics and shall be limited by the following: (a) The use of alternative flaws shall be limited to when the implantation of cracks produces spurious reflectors that are uncharacteristic of actual flaws. (b) Flaws shall be semi elliptical with a tip width of

SUPPLEMENT 11 - QUALIFICATION REQUIREMENTS FOR FULL STRUCTURAL OVERLAID WROUGHT AUSTENITIC PIPING WELDS	PDI PROGRAM: The Proposed Alternative to Supplement 11 Requirements
	less than or equal to 0.002 inches. **Basis:** *This paragraph requires that all base metal flaws be cracks and to extend at least 75 percent through the base metal wall. Implanting a crack requires excavation of the base material on at least one side of the flaw. While this may be satisfactory for ferritic materials, it does not produce a useable axial flaw in austenitic materials because the sound beam, which normally passes only through base material, must now travel through weld material on at least one side, producing an unrealistic flaw response. To resolve this issue, the PDI program revised this paragraph to allow use of alternative flaw mechanisms under controlled conditions. For example, alternative flaws shall be limited to when implantation of cracks precludes obtaining an effective ultrasonic response, flaws shall be semi elliptical with a tip width of less than or equal to 0.002 inches, and at least 70 percent of the flaws in the detection and sizing test shall be cracks and the remainder shall be alternative flaws. To avoid confusion, the overlay thickness tolerance contained in paragraph 1.1(b) last sentence, was reworded and the phrase "and the remainder shall be alternative flaws" was added to the next to last sentence. Paragraph 1.1(d)(1) includes the statement that intentional overlay fabrication flaws shall not interfere with ultrasonic detection or characterization of the base metal flaws. Additionally, 1.1(d)(1) was revised to state that flaws must extend at least 50 percent through the base metal wall. This allows qualification to take advantage of additional test specimens to demonstrate increased examination depth.*
(e) Detection Specimens	
(1) At least 20 percent but less than 40 percent of the flaws shall be oriented within +/-20° of the pipe axial direction. The remainder shall be oriented circumferentially. Flaws shall not be open to any surface to which the candidate has physical or visual access. The rules of IWA-3300 shall be used to determine whether closely spaced flaws should be treated as single or multiple flaws.	**Alternative:** (1) At least 20 percent but less than 40 percent of the base metal flaws shall be oriented within +/-20 degrees of the pipe axial direction. The remainder shall be oriented circumferentially. Flaws shall not be open to any surface to which the candidate has physical or visual access. **Basis:** *The requirement for axially oriented overlay fabrication flaws was excluded from the PDI Program as an improbable scenario. Weld overlays are typically applied using automated gas tungsten arc welding techniques with the filler metal applied in a circumferential direction. Because resultant fabrication induced discontinuities would also be expected to have major dimensions oriented in the*

SUPPLEMENT 11 - QUALIFICATION REQUIREMENTS FOR FULL STRUCTURAL OVERLAID WROUGHT AUSTENITIC PIPING WELDS	PDI PROGRAM: The Proposed Alternative to Supplement 11 Requirements
	circumferential direction axial overlay fabrication flaws are unrealistic. The requirement for using IWA-3300 for proximity flaw evaluation was excluded; instead indications shall be sized based on their individual merits.
(2) Specimens shall be divided into base and overlay grading units. Each specimen shall contain one or both types of grading units.	**Alternative:** (2) Specimens shall be divided into base metal and overlay fabrication grading units. Each specimen shall contain one or both types of grading units. Flaws shall not interfere with ultrasonic detection or characterization of other flaws. **Basis:** *Inclusion of "metal" and "fabrication" provides clarification. Flaw identification is improved by ensuring flaws are not masked by other flaws.*
(a)(1) A base grading unit shall include at least 3 inch of the length of the overlaid weld. The base grading unit includes the outer 25 percent of the overlaid weld and base metal on both sides. The base grading unit shall not include the inner 75 percent of the overlaid weld and base metal overlay material, or base metal-to-overlay interface.	**Alternative:** (a)(1) A base metal grading unit includes the overlay material and the outer 50 percent of the original overlaid weld. The base metal grading unit shall extend circumferentially for at least 1 inch and shall start at the weld centerline and be wide enough in the axial direction to encompass one half of the original weld crown and a minimum of 0.50" of the adjacent base material. **Basis:** *The phrase "and base metal on both sides," was inadvertently included in the description of a base metal grading unit, The PDI program intentionally excludes this requirement because some of the qualification samples include flaws on both sides of the weld. To avoid confusion several instances of the term "cracks" or "cracking" were changed to the term "flaws" because of the use of alternative Flaw mechanisms. Modified to require that a base metal grading unit include at least1inch of the length of the overlaid weld, rather than 3 inches.*
(a)(2) When base metal cracking penetrates into the overlay material, the base grading unit shall include the overlay metal within 1 inch of the crack location. This portion of the overlay material shall not be used as part of any overlay grading unit.	**Alternative:** (a)(2) When base metal flaws penetrate into the overlay material, the base metal grading unit shall not be used as part of any overlay fabrication grading unit. **Basis:** *Substituted terms provide clarification and are consistent with 1d(1) above. The PDI program adjusts for this conservative change for excluding this type grading unit.*
(a)(3) When a base grading unit is designed to be unflawed, at least 1 inch of unflawed overlaid	**Alternative:** (a)(3) Sufficient unflawed overlaid weld and base metal shall exist on all sides of the

SUPPLEMENT 11 - QUALIFICATION REQUIREMENTS FOR FULL STRUCTURAL OVERLAID WROUGHT AUSTENITIC PIPING WELDS	PDI PROGRAM: The Proposed Alternative to Supplement 11 Requirements
weld and base metal shall exist on either side of the base grading unit. The segment of weld length used in one base grading unit shall not be used in another base grading unit. Base grading units need not be uniformly spaced around the specimen.	grading unit to preclude interfering reflections from adjacent flaws. **Basis:** *Modified to require sufficient unflawed overlaid weld and base metal to exist on all sides of the grading unit to preclude interfering reflections from adjacent flaws, rather than the 1 inch requirement.*
(b)(1) An overlay grading unit shall include the overlay material and the base metal-to-overlay interface of at least 6 in^2. The overlay grading unit shall be rectangular, with minimum dimensions of 2 inches.	**Alternative:** (b)(1) An overlay fabrication grading unit shall include the overlay material and the base metal-to-overlay interface for a length of at least 1 inch **Basis:** *The PDI program reduces the base metal-to-overlay interface to at least 1 inch (in lieu of a minimum of 2 inches) and eliminates the minimum rectangular dimension. This criterion is necessary to allow use of existing examination specimens that were fabricated in order to meet NRC Generic Letter 88-01. This criterion may be more challenging than the ASME Code because of the variability associated with the shape of the grading unit.*
(b)(2) An overlay grading unit designed to be unflawed shall be surrounded by unflawed overlay material and unflawed base metal-to-overlay interface for at least 1 inch around its entire perimeter. The specific area used in one overlay grading unit shall not be used in another overlay grading unit. Overlay grading units need not be spaced uniformly about the specimen.	**Alternative:** (b)(2) Overlay fabrication grading units designed to be unflawed shall be separated by unflawed overlay material and unflawed base metal-to-overlay interface for at least 1 inch at both ends. Sufficient unflawed overlaid weld and base metal shall exist on both sides of the overlay fabrication grading unit to preclude interfering reflections from adjacent flaws. The specific area used in one overlay fabrication grading unit shall not be used in another overlay fabrication grading unit. Overlay fabrication grading units need not be spaced uniformly about the specimen. **Basis:** *Paragraph 1.1 (e)(2)(b)(2) states that overlay fabrication grading units designed to be unflawed shall be separated by unflawed overlay material and unflawed base metal-to-overlay interface for at least 1 inch at both ends, rather than around its entire perimeter.*
(b)(3) Detection sets shall be selected from Table VIII-S2-1. The minimum detection sample set is five flawed base grading units, ten unflawed base grading units, five flawed overlay grading units, and ten unflawed overlay grading units. For each type of grading unit, the set shall contain at least twice as many unflawed as flawed grading units.	**Alternative:**...base metal grading units, ten unflawed base metal grading units, five flawed overlay fabrication grading units, and ten unflawed overlay fabrication grading units. For each type of grading unit, the set shall contain at least twice as many unflawed as flawed grading units. For initial procedure qualification, detection sets shall include

SUPPLEMENT 11 - QUALIFICATION REQUIREMENTS FOR FULL STRUCTURAL OVERLAID WROUGHT AUSTENITIC PIPING WELDS	PDI PROGRAM: The Proposed Alternative to Supplement 11 Requirements
	the equivalent of three personnel qualification sets. To qualify new values of essential variables, at least one personnel qualification set is required. **Basis:** *Clarified the guidance for initial procedure qualifications versus qualifying new values of essential variables.*
(f) Sizing Specimen	
(1) The minimum number of flaws shall be ten. At least 30 percent of the flaws shall be overlay fabrication flaws. At least 40 percent of the flaws shall be cracks open to the inside surface.	**Alternative:** (1) The...least 40 percent of the flaws shall be open to the inside surface. Sizing sets shall contain a distribution of flaw dimensions to assess sizing capabilities. For initial procedure qualification, sizing sets shall include the equivalent of three personnel qualification sets. To qualify new values of essential variables, at least one personnel qualification set is required. **Basis:** *Clarified the guidance for initial procedure qualifications versus qualifying new values of essential variables and is consistent with 1.1(d)(1) above..*
(3) Base metal cracking used for length sizing demonstrations shall be oriented circumferentially.	**Alternative:** (3) Base metal flaws used…circumferentially. **Basis:** *Clarified wording to be consistent with 1.1(d)(1) above.*
(4) Depth sizing specimen sets shall include at least two distinct locations where cracking in the base metal extends into the overlay material by at least 0.1 inch in the through-wall direction.	**Alternative:** (4) Depth sizing specimen sets shall include at least two distinct locations where a base metal flaw extends into the overlay material by at least 0.1 inch in the through-wall direction. **Basis:** *Clarified wording to be consistent with 1.1(d)(1) above.*
2.0 Conduct of Performance Demonstration	
The specimen inside surface and identification shall be concealed from the candidate. All examinations shall be completed prior to grading the results and presenting the results to the candidate. Divulgence of particular specimen results or candidate viewing of unmasked specimens after the performance demonstration is prohibited.	**Alternative:** The specimen ...prohibited. The overlay fabrication flaw test and the base metal flaw test may be performed separately. **Basis:** *Clarified wording to describe process .*
2.1 Detection Test.	
Flawed and unflawed grading units shall be randomly mixed. Although the boundaries of specific grading units shall not be revealed to the candidate, the candidate shall be made aware of the type or types of grading units (base or overlay) that are present for each specimen.	**Alternative:** Flawed…(base metal or overlay fabrication)…each specimen. **Basis:** *Clarified wording similar to 1.1(e)(2) above.*
2.2 Length Sizing Test	
(d) For flaws in base grading units, the candidate shall estimate the length of that part of the flaw	**Alternative:** (d) For . . . base metal grading . . . 50 percent of the base metal wall thickness.

SUPPLEMENT 11 - QUALIFICATION REQUIREMENTS FOR FULL STRUCTURAL OVERLAID WROUGHT AUSTENITIC PIPING WELDS	PDI PROGRAM: The Proposed Alternative to Supplement 11 Requirements
that is in the outer 25 percent of the base wall thickness.	**Basis:** *Clarified wording for consistency and to be consistent with 1.1(d)(1) above.*
2.3 Depth Sizing Test.	
For the depth sizing test, 80 percent of the flaws shall be sized at a specific location on the surface of the specimen identified to the candidate. For the remaining flaws, the regions of each specimen containing a flaw to be sized shall be identified to the candidate. The candidate shall determine the maximum depth of the flaw in each region.	**Alternative:** (a) The depth sizing test may be conducted separately or in conjunction with the detection test. (b) When the depth sizing test is conducted in conjunction with the detection test and the detected flaws do not satisfy the requirements of 1.1(f), additional specimens shall be provided to the candidate. The regions containing a flaw to be sized shall be identified to the candidate. The candidate shall determine the maximum depth of the flaw in each region. (c) For a separate depth sizing test, the regions of each specimen containing a flaw to be sized shall be identified to the candidate. The candidate shall determine the maximum depth of the flaw in each region. **Basis:** *Clarified wording to better describe process.*
3.0 ACCEPTANCE CRITERIA	
3.1 Detection Acceptance Criteria	
Examination procedures, equipment, and personnel are qualified for detection when the results of the performance demonstration satisfy the acceptance criteria of Table Vlll-S2-1 for both detection and false calls. The criteria shall be satisfied separately by the demonstration results for base grading units and for overlay grading units.	**Alternative:** Examination procedures are qualified for detection when: a. All flaws within the scope of the procedure are detected and the results of the performance demonstration satisfy the acceptance criteria of Table VIII-S2-1 for false calls. b. At least one successful personnel demonstration has been performed meeting the acceptance criteria defined in (c). c. Examination equipment and personnel are qualified for detection when the results of the performance demonstration satisfy the acceptance criteria of Table Vlll-S2-1 for both detection and false calls. d. The criteria in (b) and (c) shall be satisfied separately by the demonstration results for base metal grading units and for overlay fabrication grading units. **Basis:** *Clarified wording to better describe the difference between procedure qualification and equipment and personnel qualifications.*
3.2 Sizing Acceptance Criteria	
(a) The RMS error of the flaw length measurements, as compared to the true flaw lengths, is less than or equal to 0.75 inch. The length of base metal cracking is measured at the	**Alternative:** (a) The...base metal flaws is...50 percent through-base-metal position. **Basis:** *Clarified wording to be consistent with 1.1(d)(1) above.*

SUPPLEMENT 11 - QUALIFICATION REQUIREMENTS FOR FULL STRUCTURAL OVERLAID WROUGHT AUSTENITIC PIPING WELDS	PDI PROGRAM: The Proposed Alternative to Supplement 11 Requirements
75 percent through-base-metal position.	
(b) All extensions of base metal cracking into the overlay material by at least 0.1 inch are reported as being intrusions into the overlay material.	**Alternative:** This requirement is omitted. ***Basis:*** *The requirement for reporting all extensions of cracking into the overlay is omitted from the PDI Program because it is redundant to the RMS calculations performed in paragraph 3.2(c) and its presence adds confusion and ambiguity to depth sizing as required by paragraph 3.2(c). This also makes the weld overlay program consistent with the supplement 2 depth sizing criteria.*

COMPARISON OF ASME CODE CASE N-504-3 AND APPENDIX Q OF ASME CODE SECTION XI WITH THE PROPOSED ALTERNATIVE OF ATTACHMENT 1 FOR WELD OVERLAY

ASME Code Case N-504-3 and Appendix Q of ASME Code Section XI	Proposed Alternative of Attachment 1
ASME Code Case N-504-3 provides requirements for reducing a defect to a flaw of acceptable size by deposition of weld reinforcement (weld overlay) on the outside surface of the pipe using austenitic stainless steel filler metal as an alternative to defect removal. ASME Code Case N-504-3 is applicable to austenitic stainless steel piping only. According to Regulatory Guide 1.147, the provisions of Nonmandatory Appendix Q of ASME Code Section XI must also be met when using this Case. Therefore, the Code Case N-504-3 requirements presented below have been supplemented by Appendix Q of ASME Code Section XI.	The proposed alternative of Attachment 1 provides requirements for installing a repair or preemptive full structural weld overlay or preemptive optimized weld overlay by deposition of weld reinforcement (weld overlay) on the outside surface of the item using Nickel Alloy 52M filler metal. Attachment 1 is applicable to dissimilar metal welds associated with nickel alloy materials. The proposed alternative of Attachment 1 is based on ASME Code Case N-740-2.
General Requirements	*General Requirements*
ASME Code Case N-504-3 and Appendix Q are only applicable to P-No. 8 austenitic stainless steels.	As specified in paragraph 1.1(a), the proposed alternative is applicable to dissimilar metal 82/182 welds joining P-No. 3 to P-No. 8 or 43 materials and P-No. 8 to P-No. 43 materials. It is also applicable to austenitic stainless steel welds joining P-No. 8 materials. *Basis: ASME Code Case N-504-3 and Appendix Q are applicable to austenitic weld overlays of P-No. 8 austenitic stainless steel materials. Based on ASME Code Case N-740-2, the proposed alternative of Attachment 1 was specifically written to address the application of weld overlays over dissimilar metal welds and austenitic stainless steel welds.*
According to paragraph (b) of ASME Code Case N-504-3 as supplemented by Appendix Q, weld overlay filler metal shall be low carbon (0.035 percent max.) austenitic stainless steel applied 360 degrees around the circumference of the pipe, and shall be deposited using a Welding Procedure Specification for groove welding, qualified in accordance with the Construction Code and Owner's Requirements and identified in the Repair/Replacement Plan.	The weld filler metal and procedure requirements of paragraph 1.1(b) are equivalent to ASME Code Case N-504-3 and Appendix Q except as noted below: • Weld overlay filler metal shall be austenitic Nickel Alloy 52M (ERNiCrFe-7A) filler metal which has a chromium content of at least 28 percent. If a stainless steel buffer layer is used as permitted by N-740-2, the ferrite content of the filler material shall be 5 - 15FN as required by the Construction Code. As an alternative to post-weld heat treatment, the provisions for "Ambient

	Temperature Temper Bead Welding" may be used on the ferritic nozzle as described in Attachment 1. *Basis: The weld overlay shall be deposited with ERNiCrFe-7A (Alloy 52M) filler metal. It has been included into ASME Code Section IX as F-No. 43 filler metals. Containing 28.0 - 31.5 percent chromium (roughly twice the chromium content of 82/182 filler metal), this filler metal has excellent resistance to primary water stress corrosion cracking. This point has been clearly documented in EPRI Technical Report MRP-115, Section 2.2. Regarding the welding procedure specification (WPS), the requirements of Attachments 2 and 3 provide clarification that the WPS used for depositing weld overlays must be qualified as a groove welding procedure to ensure that mechanical properties of the WPS are appropriately established. Where welding is performed on ferritic nozzles, an ambient temperature temper bead WPS shall be used. Suitability of an ambient temperature temper bead WPS is addressed in Section 5 of this Request*
According to paragraph (e) of ASME Code Case N-504-3 as supplemented by Appendix Q, the weld reinforcement shall consist of at least two weld layers having as-deposited delta ferrite content of at least 7.5 FN. The first layer of weld metal with delta ferrite content of at least 7.5 FN shall constitute the first layer of the weld reinforcement that may be credited toward the required thickness. Alternatively, first layers of at least 5 FN provided the carbon content is determined by chemical analysis to be less than 0.02 percent.	The weld overlay described in Attachment 1 is deposited using nickel Alloy 52M filler metal instead of austenitic stainless steel filler metals. Therefore, the basis for crediting the first layer towards the required design thickness is based on the chromium content of the nickel alloy filler metal. According to paragraph A1.1(e), the first layer of nickel Alloy 52M deposited weld metal may be credited toward the required thickness provided the portion of the layer over the austenitic base material, austenitic weld, and the associated dilution zone from an adjacent ferritic base material contains at least 24 percent chromium. The chromium content of the deposited weld metal may be determined by chemical analysis of the production weld or from a representative coupon taken from a mockup prepared in accordance with the WPS for the production weld. *Basis: The weld overlay shall be deposited with ERNiCrFe-7A (Alloy 52M) filler metal. Credit for the first weld layer may not be taken toward the required thickness unless it has been shown to contain at least 24 percent chromium. This is a sufficient amount of chromium to prevent primary water stress corrosion cracking. Section 2.2 of EPRI Technical Report MRP-115 states the following: "The only well explored effect of the compositional differences among the weld alloys on primary water stress corrosion cracking is the influence of chromium. Buisine, et al. (Reference 24) evaluated the primary water stress corrosion cracking resistance of nickel-based weld metals with various chromium contents ranging from about 15 percent to 30 percent*

	chromium. Testing was performed in doped steam and primary water. Alloy 182, with about 14.5 percent chromium, was the most susceptible. Alloy 82 with 18-20 percent chromium took three or four times longer to crack. For chromium contents between 21 and 22 percent, no stress corrosion crack initiation was observed ... "
Design and Crack Growth Considerations	Design and Crack Growth Considerations
The design and flaw characterization provisions of ASME Code Case N504-3, paragraphs (f) and (g) as supplemented by Appendix Q are summarized below: (i) Flaw characterization and evaluation are based on the as-found flaw. Flaw evaluation of the existing flaws is based on IWB3640 for the design life. • Multiple circumferential flaws shall be treated as one flaw of length equal to the sum of the lengths of the individual flaws. • Circumferential flaws are postulated as 100 percent through-wall for the entire circumference with one exception. When the combined length of circumferential flaws does not exceed 10 percent of the circumference, the flaws are only assumed to be 100 percent through-wall for the combined length of the flaws. • For axial flaws 1.5 inches or longer, or for five or more axial flaws of any length, the flaws shall be assumed to be 100 percent through-wall for the axial length of the flaw and entire circumference of the pipe. (ii) For four or fewer axial flaws less than 1.5 inches in length, the weld overlay thickness need only consist of two or more layers of weld metal meeting the deposit analysis requirements. (iii) The axial length and end slope of the weld overlay shall cover the weld and HAZs on each side of the weld, and shall provide for load redistribution from the item into the weld overlay and back into the item without violating applicable stress limits of the Construction Code. Any laminar flaws in the weld overlay shall be evaluated in the analysis to ensure that load redistribution complies with the above. These requirements are usually met if the weld overlay extends beyond the projected flaw by at least $0.75(Rt)^{1/2}$. (iv) Unless specifically analyzed, the end transition slope of the overlay shall not exceed 45 degrees, and a slope of not more than 1:3 is recommended.	The design and flaw evaluation provisions in the proposed alternative are the same as ASME Code Case N-504-3 as supplemented in Appendix Q with the exceptions below. The proposed design and flaw evaluation provisions are based on postulated flaws or as-found flaws. • For weld overlay crack growth evaluations, a flaw with a depth of 10 percent and a circumference of 360 degrees shall be assumed or the as-found flaw size shall be used. The size of the flaws shall be projected to the end of the design life of the overlay. Crack growth, including both stress corrosion and fatigue crack growth, shall be evaluated in the materials in accordance with IWB-3640. If the flaw is at or near the boundary of two different materials, evaluation of flaw growth in both materials is required. *Basis: A preservice volumetric examination shall be performed after application of the weld overlay using an ASME Code Section XI, Appendix VIII (as implemented through PDI) examination procedure. This examination shall verify that there is no cracking in the upper 25 percent of the original weld and base material for a full structural weld overlay. The preservice examination shall also demonstrate that the assumed through-wall crack depths are conservative. However, if any crack-like flaws are identified in the upper 25 percent of the original weld or base material by the preservice examination, then the as-found flaw (postulated 75 percent through-wall flaw plus the portion of the flaw in the upper 25 percent) shall be used for the crack growth analysis. With regard to design, flaws are considered to be either 75 percent through-wall for assumed crack depth or 100 percent through the original weld when a flaw is identified by inspection and no structural credit is taken for the weld. All other requirements are equivalent to ASME Code Case N-504-3 as supplemented by Appendix Q.*

(v) The overlay design thickness of items shall be based on the measured diameter, using only the weld overlay thickness conforming to the deposit analysis requirements. The combined wall thickness at the weld overlay, any planar flaws in the weld overlay, and the effects of any discontinuity (for example, another weld overlay or reinforcement for a branch connection) within a distance of $0.75(Rt)^{1/2}$ from the toes of the weld overlay, shall be evaluated and meet the requirements of IWB-, IWC-, or IWD-3640. (vi) The effects of any changes in applied loads, as a result of weld shrinkage or existing flaws previously accepted by analytical evaluation shall be evaluated in accordance with IWB-3640, IWC-3640, or IWD-3640, as applicable.	
Examination and Inspection	Examination and Inspection
Acceptance Examination Q-4100(c) states that the examination volume in Figure Q-4100-1 shall be ultrasonically examined to assure adequate fusion (that is, adequate bond) with the base metal and to detect welding flaws, such as inter-bead lack of fusion, inclusions, or cracks. Planar flaws shall meet the preservice examination standards of Table IWB-3514-2. Laminar flaws shall meet the following:	The acceptance standards in Attachment 1 are identical to those of paragraph Q-4100(c) except that the proposed method includes requirements and clarifications that are not included in Appendix Q. First, it specifies that the ultrasonic examination shall be conducted at least 48 hours after completing the third layer of the weld overlay when ambient temperature temper bead welding is used. Secondly, it provides the following clarifications: • The interface C-D between the weld overlay and the weld includes the bond and the HAZ from the weld overlay. • In applying the acceptance standards, wall thickness "t_w" shall be the thickness of the weld overlay. *Basis: Appendix Q is applicable to austenitic stainless steel materials only; therefore, ambient temperature temper bead welding would not be applicable. It is applicable to welding performed in the proposed alternative. When ambient temperature temper bead welding is performed, nondestructive examinations must be performed at least 48 hours after completing the third layer of the weld overlay to allow sufficient time for hydrogen cracking to occur (if it is to occur). Technical justification for starting the 48 hours after completion of the third layer of the weld overlay is provided in Section 5 of the Request. The other two changes are simply clarifications that were added to ensure that the examination requirements were appropriately performed.*
Q-4100(c)(1) states that laminar flaws shall meet the acceptance standards of Table IWB-3514-3.	The acceptance standards of the proposed method are identical to paragraph Q-4100(c)(1) except that the proposal includes the additional limitation that the

	total laminar flaw shall not exceed 10 percent of the weld surface area and that no linear dimension of the laminar flaw area exceeds 3.0 inches *Basis: These changes were made to provide additional conservatism to the weld overlay examination and to reduce the size of the un-inspectable volume beneath a laminar flaw. See Section 5 of this Request for additional information.*
Q-4100(c)(4) allows the performance of radiography in accordance with the Construction Code as an alternative to Q-4100(c) (3).	The acceptance standards of the proposed alternative do not include the radiographic alternative of paragraph Q-4100(c)(4). *Basis: The ultrasonic examinations performed in accordance with the proposed alternative are in accordance with ASME Cod, Section XI, Appendix VIII, Supplement 11 as implemented through the PDI. These examinations are considered more sensitive for detection of defects, either from fabrication or service-induced, than either ASME Code Section III radiographic or ultrasonic methods. Furthermore, construction type flaws have been included in the PDI qualification sample sets for evaluating procedures and personnel. See Section 5 of this Request for additional justification.*
Preservice Inspection	Preservice Inspection
Q-4200(b) states that the preservice examination acceptance standards of Table IWB-3514-2 shall be met for the weld overlay. Cracks in the outer 25 percent of the base metal shall meet the design analysis requirements of Q-3000.	The acceptance standards of the proposed alternative are identical to paragraph Q-4200(b) except proposed alternative includes the following statement: "In applying the acceptance standards, wall thickness, shall be the thickness of the weld overlay." *Basis: This provision is actually a clarification that the nominal wall thickness of Table IWB-3514-2 shall be considered the thickness of the weld overlay. It must be remembered that the acceptance standards were originally written for the welds identified in IWB-2500. Because IWB-2500 does not address weld overlays, this clarification was provided to avoid any potential confusion. However, defining the weld overlay thickness as the nominal wall thickness of Table IWB-3514-2 has always been the practice since it literally becomes the new design wall of the piping or component nozzle.*
Pressure Testing	Pressure Testing
(h) The completed repair shall be pressure tested in accordance with IWA-5000. A system hydrostatic test is required if the flaw penetrated the pressure boundary. A system leakage test may be performed if pressure boundary is not penetrated.	The pressure testing requirements included in the alternative are similar to paragraph (h) of ASME Code Case N-504-3 except that only a system leakage test per IWA-5000 is required.

Structural Integrity Associates, Inc.

5215 Hellyer Ave.
Suite 210
San Jose, CA 95138-1025
Phone: 408-978-8200
Fax: 408-978-8964
www.structint.com

November 11, 2009

AFFIDAVIT

I, Marcos Legaspi Herrera, state as follows:

(1) I am a Vice President of Structural Integrity Associates, Inc. (SI) and have been delegated the function of reviewing the information described in paragraph (2) which is sought to be withheld, and have been authorized to apply for its withholding.

(2) The information sought to be withheld is contained in SI Calculation 0800368.301, Rev. 0, "Material Properties for Davis-Besse Unit 1, RCP Suction, RCP Discharge, Cold Leg Drain and Core Flood Nozzles Preemptive Weld Overlay Repairs." This calculation is to be treated as SI proprietary information, because it contains significant information that is deemed proprietary and confidential to AREVA NP. AREVA NP design input information was provided to SI in strictest confidence so that we could generate the aforementioned calculation on behalf of SI's client, FirstEnergy Nuclear Operating Company (FENOC).

Paragraph 3 of this Affidavit provides the basis for the proprietary determination.

(3) SI is making this application for withholding of proprietary information on the basis that such information was provided to SI under the protection of a Proprietary/Confidentiality and Nondisclosure Agreement between SI and AREVA NP. In a separate Affidavit requesting withholding of such proprietary information prepared by AREVA NP, AREVA NP relies upon the exemption of disclosure set forth in NRC Regulation 10 CFR 2.390(a)(4) pertaining to "trade secrets and commercial or financial information obtained from a person and privileged or confidential" (Exemption 4). As delineated in AREVA NP's Affidavit, the material for which exemption from disclosure is herein sought is considered proprietary for the following reasons (taken directly from Items 6(b) and 6(c) of AREVA NP's Affidavit):

a) Use of the information by a competitor would permit the competitor to significantly reduce its expenditures, in time or resources, to design, produce, or market a similar product or service; and

b) The information includes test data or analytical techniques concerning a process, methodology, or component, the application of which results in a competitive advantage for AREVA NP.

Public disclosure of the information sought to be withheld is likely to cause substantial harm to AREVA NP with which SI has established a Proprietary/Confidentiality and Nondisclosure Agreement.

I declare under penalty of perjury that the above information and request are true, correct, and complete to the best of my knowledge, information, and belief.

Executed at San Jose, California on this 11th day of November, 2009.

Marcos Legaspi Herrera, P.E.
Vice President
Nuclear Plant Services

State of California

County of Santa Clara

Subscribed and sworn to (or affirmed) before me

on this 11 (Date) day of November (Month), 20 09 (Year),

by

(1) Marcos Legaspi Herrera
Name of Signer

proved to me on the basis of satisfactory evidence to be the person who appeared before me (.) (X)

(and

(2) _____
Name of Signer

proved to me on the basis of satisfactory evidence to be the person who appeared before me.)

C. METZGER
Commission # 1866327
Notary Public - California
Santa Clara County
My Comm. Expires Sep 27, 2013

Signature _____
Signature of Notary Public

Place Notary Seal and/or Stamp Above

Structural Integrity Associates, Inc.

5215 Hellyer Ave.
Suite 210
San Jose, CA 95138-1025
Phone: 408-978-8200
Fax: 408-978-8964
www.structint.com

November 11, 2009

AFFIDAVIT

I, Marcos Legaspi Herrera, state as follows:

(1) I am a Vice President of Structural Integrity Associates, Inc. (SI) and have been delegated the function of reviewing the information described in paragraph (2) which is sought to be withheld, and have been authorized to apply for its withholding.

(2) The information sought to be withheld is contained in SI Calculation 0800368.311, Rev. 0, "Design Loads for the 28" I.D. Reactor Coolant Pump (RCP) Suction and Discharge Nozzles." This calculation is to be treated as SI proprietary information, because it contains significant information that is deemed proprietary and confidential to AREVA NP. AREVA NP design input information was provided to SI in strictest confidence so that we could generate the aforementioned calculation on behalf of SI's client, FirstEnergy Nuclear Operating Company (FENOC).

Paragraph 3 of this Affidavit provides the basis for the proprietary determination.

(3) SI is making this application for withholding of proprietary information on the basis that such information was provided to SI under the protection of a Proprietary/Confidentiality and Nondisclosure Agreement between SI and AREVA NP. In a separate Affidavit requesting withholding of such proprietary information prepared by AREVA NP, AREVA NP relies upon the exemption of disclosure set forth in NRC Regulation 10 CFR 2.390(a)(4) pertaining to "trade secrets and commercial or financial information obtained from a person and privileged or confidential" (Exemption 4). As delineated in AREVA NP's Affidavit, the material for which exemption from disclosure is herein sought is considered proprietary for the following reasons (taken directly from Items 6(b) and 6(c) of AREVA NP's Affidavit):

a) Use of the information by a competitor would permit the competitor to significantly reduce its expenditures, in time or resources, to design, produce, or market a similar product or service; and

b) The information includes test data or analytical techniques concerning a process, methodology, or component, the application of which results in a competitive advantage for AREVA NP.

Public disclosure of the information sought to be withheld is likely to cause substantial harm to AREVA NP with which SI has established a Proprietary/Confidentiality and Nondisclosure Agreement.

I declare under penalty of perjury that the above information and request are true, correct, and complete to the best of my knowledge, information, and belief.

Executed at San Jose, California on this 11th day of November, 2009.

Marcos Legaspi Herrera, P.E.
Vice President
Nuclear Plant Services

State of California

County of Santa Clara

Subscribed and sworn to (or affirmed) before me

on this 11 (Date) day of November (Month), 20 09 (Year),

by

(1) Marcos Legaspi Herrera
Name of Signer

proved to me on the basis of satisfactory evidence to be the person who appeared before me (.) ☒
(and

(2) _____
Name of Signer

proved to me on the basis of satisfactory evidence to be the person who appeared before me.)

C. METZGER
Commission # 1866327
Notary Public - California
Santa Clara County
My Comm. Expires Sep 27, 2013

Place Notary Seal and/or Stamp Above

Signature _____
Signature of Notary Public

Structural Integrity Associates, Inc.

5215 Hellyer Ave.
Suite 210
San Jose, CA 95138-1025
Phone: 408-978-8200
Fax: 408-978-8964
www.structint.com

November 11, 2009

AFFIDAVIT

I, Marcos Legaspi Herrera, state as follows:

(1) I am a Vice President of Structural Integrity Associates, Inc. (SI) and have been delegated the function of reviewing the information described in paragraph (2) which is sought to be withheld, and have been authorized to apply for its withholding.

(2) The information sought to be withheld is contained in SI Calculation 0800368.320, Rev. 1, "Optimized Weld Overlay Sizing for the 28" I.D. Outlet/Discharge Reactor Coolant Pump Nozzle." This calculation is to be treated as SI proprietary information, because it contains significant information that is deemed proprietary and confidential to AREVA NP. AREVA NP design input information was provided to SI in strictest confidence so that we could generate the aforementioned calculation on behalf of SI's client, FirstEnergy Nuclear Operating Company (FENOC).

Paragraph 3 of this Affidavit provides the basis for the proprietary determination.

(3) SI is making this application for withholding of proprietary information on the basis that such information was provided to SI under the protection of a Proprietary/Confidentiality and Nondisclosure Agreement between SI and AREVA NP. In a separate Affidavit requesting withholding of such proprietary information prepared by AREVA NP, AREVA NP relies upon the exemption of disclosure set forth in NRC Regulation 10 CFR 2.390(a)(4) pertaining to "trade secrets and commercial or financial information obtained from a person and privileged or confidential" (Exemption 4). As delineated in AREVA NP's Affidavit, the material for which exemption from disclosure is herein sought is considered proprietary for the following reasons (taken directly from Items 6(b) and 6(c) of AREVA NP's Affidavit):

a) Use of the information by a competitor would permit the competitor to significantly reduce its expenditures, in time or resources, to design, produce, or market a similar product or service; and

b) The information includes test data or analytical techniques concerning a process, methodology, or component, the application of which results in a competitive advantage for AREVA NP.

Public disclosure of the information sought to be withheld is likely to cause substantial harm to AREVA NP with which SI has established a Proprietary/Confidentiality and Nondisclosure Agreement.

I declare under penalty of perjury that the above information and request are true, correct, and complete to the best of my knowledge, information, and belief.

Executed at San Jose, California on this 11th day of November, 2009.

Marcos Legaspi Herrera, P.E.
Vice President
Nuclear Plant Services

State of California

County of Santa Clara

Subscribed and sworn to (or affirmed) before me

on this 11 (Date) day of November (Month), 20 09 (Year),

by

(1) Marcos Legaspi Herrera
Name of Signer

proved to me on the basis of satisfactory evidence to be the person who appeared before me (.) (X)

(and

(2) _____
Name of Signer

proved to me on the basis of satisfactory evidence to be the person who appeared before me.)

C. METZGER
Commission # 1866327
Notary Public - California
Santa Clara County
My Comm. Expires Sep 27, 2013

Signature _____
Signature of Notary Public

Place Notary Seal and/or Stamp Above

Structural Integrity Associates, Inc.

5215 Hellyer Ave.
Suite 210
San Jose, CA 95138-1025
Phone: 408-978-8200
Fax: 408-978-8964
www.structint.com

November 11, 2009

AFFIDAVIT

I, Marcos Legaspi Herrera, state as follows:

(1) I am a Vice President of Structural Integrity Associates, Inc. (SI) and have been delegated the function of reviewing the information described in paragraph (2) which is sought to be withheld, and have been authorized to apply for its withholding.

(2) The information sought to be withheld is contained in SI Calculation 0800368.322, Rev. 0, "Finite Element Models of the Reactor Coolant Pump Discharge Nozzle with Weld Overlay Repair." This calculation is to be treated as SI proprietary information, because it contains significant information that is deemed proprietary and confidential to AREVA NP. AREVA NP design input information was provided to SI in strictest confidence so that we could generate the aforementioned calculation on behalf of SI's client, FirstEnergy Nuclear Operating Company (FENOC).

Paragraph 3 of this Affidavit provides the basis for the proprietary determination.

(3) SI is making this application for withholding of proprietary information on the basis that such information was provided to SI under the protection of a Proprietary/Confidentiality and Nondisclosure Agreement between SI and AREVA NP. In a separate Affidavit requesting withholding of such proprietary information prepared by AREVA NP, AREVA NP relies upon the exemption of disclosure set forth in NRC Regulation 10 CFR 2.390(a)(4) pertaining to "trade secrets and commercial or financial information obtained from a person and privileged or confidential" (Exemption 4). As delineated in AREVA NP's Affidavit, the material for which exemption from disclosure is herein sought is considered proprietary for the following reasons (taken directly from Items 6(b) and 6(c) of AREVA NP's Affidavit):

a) Use of the information by a competitor would permit the competitor to significantly reduce its expenditures, in time or resources, to design, produce, or market a similar product or service; and

b) The information includes test data or analytical techniques concerning a process, methodology, or component, the application of which results in a competitive advantage for AREVA NP.

Public disclosure of the information sought to be withheld is likely to cause substantial harm to AREVA NP with which SI has established a Proprietary/Confidentiality and Nondisclosure Agreement.

I declare under penalty of perjury that the above information and request are true, correct, and complete to the best of my knowledge, information, and belief.

Executed at San Jose, California on this 11th day of November, 2009.

Marcos Legaspi Herrera, P.E.
Vice President
Nuclear Plant Services

State of California

County of Santa Clara

Subscribed and sworn to (or affirmed) before me

on this 11 (Date) day of November (Month), 20 09 (Year),

by

(1) Marcos Legaspi Herrera
Name of Signer

proved to me on the basis of satisfactory evidence to be the person who appeared before me (.) ☒
(and

(2) _____
Name of Signer

proved to me on the basis of satisfactory evidence to be the person who appeared before me.)

C. METZGER
Commission # 1866327
Notary Public - California
Santa Clara County
My Comm. Expires Sep 27, 2013

Place Notary Seal and/or Stamp Above

Signature _____
Signature of Notary Public

AFFIDAVIT

COMMONWEALTH OF VIRGINIA)
) ss.
CITY OF LYNCHBURG)

1. My name is Gayle F. Elliott. I am Manager, Product Licensing, for AREVA NP Inc. and as such I am authorized to execute this Affidavit.

2. I am familiar with the criteria applied by AREVA NP to determine whether certain AREVA NP information is proprietary. I am familiar with the policies established by AREVA NP to ensure the proper application of these criteria.

3. I am familiar with the AREVA NP information contained in Structural Integrity Associates Inc. Calculation Package, File No. 0800368.301, Revision 0, entitled "Material Properties for Davis-Besse Unit 1, RCP Suction, RCP Discharge, Cold Leg Drain and Core Flood Nozzles Preemptive Weld Overlay Repairs," dated April 2009 and referred to herein as "Document." Information contained in this Document has been classified by AREVA NP as proprietary in accordance with the policies established by AREVA NP for the control and protection of proprietary and confidential information.

4. This Document contains information of a proprietary and confidential nature and is of the type customarily held in confidence by AREVA NP and not made available to the public. Based on my experience, I am aware that other companies regard information of the kind contained in this Document as proprietary and confidential.

5. This Document has been made available to the U.S. Nuclear Regulatory Commission in confidence with the request that the information contained in this Document be withheld from public disclosure. The request for withholding of proprietary information is made in

accordance with 10 CFR 2.390. The information for which withholding from disclosure is requested qualifies under 10 CFR 2.390(a)(4) "Trade secrets and commercial or financial information."

6. The following criteria are customarily applied by AREVA NP to determine whether information should be classified as proprietary:

(a) The information reveals details of AREVA NP's research and development plans and programs or their results.

(b) Use of the information by a competitor would permit the competitor to significantly reduce its expenditures, in time or resources, to design, produce, or market a similar product or service.

(c) The information includes test data or analytical techniques concerning a process, methodology, or component, the application of which results in a competitive advantage for AREVA NP.

(d) The information reveals certain distinguishing aspects of a process, methodology, or component, the exclusive use of which provides a competitive advantage for AREVA NP in product optimization or marketability.

(e) The information is vital to a competitive advantage held by AREVA NP, would be helpful to competitors to AREVA NP, and would likely cause substantial harm to the competitive position of AREVA NP.

The information in the Document is considered proprietary for the reasons set forth in paragraphs 6(b) and 6(c) above.

7. In accordance with AREVA NP's policies governing the protection and control of information, proprietary information contained in this Document have been made available, on a limited basis, to others outside AREVA NP only as required and under suitable agreement providing for nondisclosure and limited use of the information.

8. AREVA NP policy requires that proprietary information be kept in a secured file or area and distributed on a need-to-know basis.

9. The foregoing statements are true and correct to the best of my knowledge, information, and belief.

SUBSCRIBED before me this 9th

day of November 2009.

Sherry L. McFaden
NOTARY PUBLIC, COMMONWEALTH OF VIRGINIA
MY COMMISSION EXPIRES: 10/31/10
Reg. # 7079129

SHERRY L. MCFADEN
Notary Public
Commonwealth of Virginia
7079129
My Commission Expires Oct 31, 2010

AFFIDAVIT

COMMONWEALTH OF VIRGINIA)
) ss.
CITY OF LYNCHBURG)

1. My name is Gayle F. Elliott. I am Manager, Product Licensing, for AREVA NP Inc. and as such I am authorized to execute this Affidavit.

2. I am familiar with the criteria applied by AREVA NP to determine whether certain AREVA NP information is proprietary. I am familiar with the policies established by AREVA NP to ensure the proper application of these criteria.

3. I am familiar with the AREVA NP information contained in Structural Integrity Associates Inc. Calculation Package, File No. 0800368.311, Revision 0, entitled "Design Loads for the 28" I.D. Reactor Coolant Pump (RCP) Suction and Discharge Nozzles," dated April 2009 and referred to herein as "Document." Information contained in this Document has been classified by AREVA NP as proprietary in accordance with the policies established by AREVA NP for the control and protection of proprietary and confidential information.

4. This Document contains information of a proprietary and confidential nature and is of the type customarily held in confidence by AREVA NP and not made available to the public. Based on my experience, I am aware that other companies regard information of the kind contained in this Document as proprietary and confidential.

5. This Document has been made available to the U.S. Nuclear Regulatory Commission in confidence with the request that the information contained in this Document be withheld from public disclosure. The request for withholding of proprietary information is made in

accordance with 10 CFR 2.390. The information for which withholding from disclosure is requested qualifies under 10 CFR 2.390(a)(4) "Trade secrets and commercial or financial information."

6. The following criteria are customarily applied by AREVA NP to determine whether information should be classified as proprietary:

(a) The information reveals details of AREVA NP's research and development plans and programs or their results.

(b) Use of the information by a competitor would permit the competitor to significantly reduce its expenditures, in time or resources, to design, produce, or market a similar product or service.

(c) The information includes test data or analytical techniques concerning a process, methodology, or component, the application of which results in a competitive advantage for AREVA NP.

(d) The information reveals certain distinguishing aspects of a process, methodology, or component, the exclusive use of which provides a competitive advantage for AREVA NP in product optimization or marketability.

(e) The information is vital to a competitive advantage held by AREVA NP, would be helpful to competitors to AREVA NP, and would likely cause substantial harm to the competitive position of AREVA NP.

The information in the Document is considered proprietary for the reasons set forth in paragraphs 6(b) and 6(c) above.

7. In accordance with AREVA NP's policies governing the protection and control of information, proprietary information contained in this Document have been made available, on a limited basis, to others outside AREVA NP only as required and under suitable agreement providing for nondisclosure and limited use of the information.

8. AREVA NP policy requires that proprietary information be kept in a secured file or area and distributed on a need-to-know basis.

9. The foregoing statements are true and correct to the best of my knowledge, information, and belief.

SUBSCRIBED before me this 9th

day of November 2009.

Sherry L. McFaden
NOTARY PUBLIC, COMMONWEALTH OF VIRGINIA
MY COMMISSION EXPIRES: 10/31/10
Reg. # 7079129

SHERRY L. MCFADEN
Notary Public
Commonwealth of Virginia
7079129
My Commission Expires Oct 31, 2010

AFFIDAVIT

COMMONWEALTH OF VIRGINIA)
) ss.
CITY OF LYNCHBURG)

1. My name is Gayle F. Elliott. I am Manager, Product Licensing, for AREVA NP Inc. and as such I am authorized to execute this Affidavit.

2. I am familiar with the criteria applied by AREVA NP to determine whether certain AREVA NP information is proprietary. I am familiar with the policies established by AREVA NP to ensure the proper application of these criteria.

3. I am familiar with the AREVA NP information contained in Structural Integrity Associates Inc. Calculation Package, File No. 0800368.320, Revision 1, entitled "Optimized Weld Overlay Sizing for the 28" I.D. Outlet/Discharge Reactor Coolant Pump Nozzle," dated May 2009 and referred to herein as "Document." Information contained in this Document has been classified by AREVA NP as proprietary in accordance with the policies established by AREVA NP for the control and protection of proprietary and confidential information.

4. This Document contains information of a proprietary and confidential nature and is of the type customarily held in confidence by AREVA NP and not made available to the public. Based on my experience, I am aware that other companies regard information of the kind contained in this Document as proprietary and confidential.

5. This Document has been made available to the U.S. Nuclear Regulatory Commission in confidence with the request that the information contained in this Document be withheld from public disclosure. The request for withholding of proprietary information is made in

accordance with 10 CFR 2.390. The information for which withholding from disclosure is requested qualifies under 10 CFR 2.390(a)(4) "Trade secrets and commercial or financial information."

6. The following criteria are customarily applied by AREVA NP to determine whether information should be classified as proprietary:

(a) The information reveals details of AREVA NP's research and development plans and programs or their results.

(b) Use of the information by a competitor would permit the competitor to significantly reduce its expenditures, in time or resources, to design, produce, or market a similar product or service.

(c) The information includes test data or analytical techniques concerning a process, methodology, or component, the application of which results in a competitive advantage for AREVA NP.

(d) The information reveals certain distinguishing aspects of a process, methodology, or component, the exclusive use of which provides a competitive advantage for AREVA NP in product optimization or marketability.

(e) The information is vital to a competitive advantage held by AREVA NP, would be helpful to competitors to AREVA NP, and would likely cause substantial harm to the competitive position of AREVA NP.

The information in the Document is considered proprietary for the reasons set forth in paragraphs 6(b) and 6(c) above.

7. In accordance with AREVA NP's policies governing the protection and control of information, proprietary information contained in this Document have been made available, on a limited basis, to others outside AREVA NP only as required and under suitable agreement providing for nondisclosure and limited use of the information.

8. AREVA NP policy requires that proprietary information be kept in a secured file or area and distributed on a need-to-know basis.

9. The foregoing statements are true and correct to the best of my knowledge, information, and belief.

SUBSCRIBED before me this 9th

day of November 2009.

Sherry L. McFaden
NOTARY PUBLIC, COMMONWEALTH OF VIRGINIA
MY COMMISSION EXPIRES: 10/31/10
Reg. # 7079129

SHERRY L. MCFADEN
Notary Public
Commonwealth of Virginia
7079129
My Commission Expires Oct 31, 2010

AFFIDAVIT

COMMONWEALTH OF VIRGINIA)
) ss.
CITY OF LYNCHBURG)

1. My name is Gayle F. Elliott. I am Manager, Product Licensing, for AREVA NP Inc. and as such I am authorized to execute this Affidavit.

2. I am familiar with the criteria applied by AREVA NP to determine whether certain AREVA NP information is proprietary. I am familiar with the policies established by AREVA NP to ensure the proper application of these criteria.

3. I am familiar with the AREVA NP information contained in Structural Integrity Associates Inc. Calculation Package, File No. 0800368.322, Revision 0, entitled "Finite Element Models of the Reactor Coolant Pump Discharge Nozzle with Weld Overlay Repair," dated May 2009 and referred to herein as "Document." Information contained in this Document has been classified by AREVA NP as proprietary in accordance with the policies established by AREVA NP for the control and protection of proprietary and confidential information.

4. This Document contains information of a proprietary and confidential nature and is of the type customarily held in confidence by AREVA NP and not made available to the public. Based on my experience, I am aware that other companies regard information of the kind contained in this Document as proprietary and confidential.

5. This Document has been made available to the U.S. Nuclear Regulatory Commission in confidence with the request that the information contained in this Document be withheld from public disclosure. The request for withholding of proprietary information is made in

accordance with 10 CFR 2.390. The information for which withholding from disclosure is requested qualifies under 10 CFR 2.390(a)(4) "Trade secrets and commercial or financial information."

6. The following criteria are customarily applied by AREVA NP to determine whether information should be classified as proprietary:

(a) The information reveals details of AREVA NP's research and development plans and programs or their results.

(b) Use of the information by a competitor would permit the competitor to significantly reduce its expenditures, in time or resources, to design, produce, or market a similar product or service.

(c) The information includes test data or analytical techniques concerning a process, methodology, or component, the application of which results in a competitive advantage for AREVA NP.

(d) The information reveals certain distinguishing aspects of a process, methodology, or component, the exclusive use of which provides a competitive advantage for AREVA NP in product optimization or marketability.

(e) The information is vital to a competitive advantage held by AREVA NP, would be helpful to competitors to AREVA NP, and would likely cause substantial harm to the competitive position of AREVA NP.

The information in the Document is considered proprietary for the reasons set forth in paragraphs 6(b) and 6(c) above.

7. In accordance with AREVA NP's policies governing the protection and control of information, proprietary information contained in this Document have been made available, on a limited basis, to others outside AREVA NP only as required and under suitable agreement providing for nondisclosure and limited use of the information.

8. AREVA NP policy requires that proprietary information be kept in a secured file or area and distributed on a need-to-know basis.

9. The foregoing statements are true and correct to the best of my knowledge, information, and belief.

SUBSCRIBED before me this 9th

day of November 2009.

Sherry L. McFaden
NOTARY PUBLIC, COMMONWEALTH OF VIRGINIA
MY COMMISSION EXPIRES: 10/31/10
Reg. # 7079129

SHERRY L. MCFADEN
Notary Public
Commonwealth of Virginia
7079129
My Commission Expires Oct 31, 2010