NEXTera ENERGY POINT BEACH

November 30, 2009

NRC 2009-0124
10 CFR 50.90

U.S. Nuclear Regulatory Commission
ATTN: Document Control Desk
Washington, DC 20555

Point Beach Nuclear Plant, Units 1 and 2
Dockets 50-266 and 50-301
Renewed License Nos. DPR-24 and DPR-27

License Amendment Request 261
Extended Power Uprate
Response to Request for Additional Information

References:
(1) FPL Energy Point Beach, LLC letter to NRC, dated April 7, 2009, License Amendment Request 261, Extended Power Uprate (ML091250564)
(2) NRC electronic mail to NextEra Energy Point Beach, LLC, dated November 2, 2009, Point Beach Nuclear Plant, Units 1 and 2 - Request for Additional Information from Instrumentation and Control Branch RE: Non-conservative Technical Specification (ML093060170)

NextEra Energy Point Beach, LLC (NextEra) submitted License Amendment Request (LAR) 261 (Reference 1) to the NRC pursuant to 10 CFR 50.90. The proposed amendment would increase each unit's licensed thermal power level from 1540 megawatts thermal (MWt) to 1800 MWt, and revise the Technical Specifications to support operation at the increased thermal power level.

The NRC staff determined that additional information was required (Reference 2). Enclosure 1 provides the NextEra's response to the request for additional information (RAI). Enclosures 2 through 5 contain representative calculations used to obtain Allowable Values to support NextEra's response to RAI Questions 2 and 3.

This letter contains no new Regulatory Commitments and no revisions to existing Regulatory Commitments.

The information contained in this letter does not alter the no significant hazards consideration contained in Reference (1) and continues to satisfy the criteria of 10 CFR 51.22 for categorical exclusion from the requirements for an environmental assessment.

A001
NRR

In accordance with 10 CFR 50.91, a copy of this letter is being provided to the designated Wisconsin Official.

I declare under penalty of perjury that the foregoing is true and correct.
Executed on November 30, 2009.

Very truly yours,

NextEra Energy Point Beach, LLC

Larry Meyer
Site Vice President

Enclosures

cc: Administrator, Region III, USNRC
Project Manager, Point Beach Nuclear Plant, USNRC
Resident Inspector, Point Beach Nuclear Plant, USNRC
PSCW

ENCLOSURE 1

NEXTERA ENERGY POINT BEACH, LLC
POINT BEACH NUCLEAR PLANT, UNITS 1 AND 2

LICENSE AMENDMENT REQUEST 261
EXTENDED POWER UPRATE
RESPONSE TO REQUEST FOR ADDITIONAL INFORMATION

The NRC staff determined that additional information was required (Reference 1) to enable the Instrumentation and Control Branch to continue its review of License Amendment Request (LAR) 261, Extended Power Uprate (Reference 2). The following information is provided by NextEra Energy Point Beach, LLC (NextEra) in response to the NRC staff's questions.

Question 1

On Tables 3.3.1-1, RPS Instrumentation, and 3.3.2-1, ESFAS Instrumentation, the Allowable Value column was changed to Limiting Safety System Setting. However, some values on that column remained the same. Please provide justification for these values staying the same.

NextEra Response

The Allowable Value column is not being changed to Limiting Safety System Setting (LSSS). Point Beach Nuclear Plant (PBNP) will continue to use Allowable Values rather than LSSS. Therefore, further justification is not required. This response was discussed with the NRC during a teleconference on November 24, 2009. The NRC stated that this was an acceptable approach in response to this question.

Question 2

Please provide the data source for the parameters, including the As-Found and As-Left values, used in the LSSS calculations.

NextEra Response

The data source for parameters, including the as-found and as-left values, are provided in the representative calculations contained in Enclosures 2, 3, 4, and 5. Additional as-found and as-left values and associated data sources are not required to be provided. This response was discussed with the NRC during a teleconference on November 24, 2009. The NRC stated that this was an acceptable approach in response to this question.

Question 3

Please provide the representative calculations used to obtain the LSSS values.

NextEra Response

Representative calculations are provided in the enclosures listed below. These calculations are representative of Technical Specification Reactor Protection System (RPS) and Engineered Safety Features Actuation System (ESFAS) values for non-Extended Power Uprate (EPU) changes and those changes requested in NextEra's expedited review request (Reference 3). There are 10 calculations for these setpoint changes, four of which are provided in the enclosures and described below. This response was discussed with the NRC during a teleconference on November 24, 2009. The NRC stated that this was an acceptable approach in response to this question.

Enclosure	Calculation
Enclosure 2	Pressurizer Pressure Instrument Loop Uncertainty and Setpoint
Enclosure 3	Turbine Impulse Pressure Low Power Permissive P-7 Instrument Scaling and Uncertainty
Enclosure 4	Containment Pressure Low Range A minor revision has been completed for the containment pressure low range calculation. The minor revision to this calculation is presented in the first 11 pages of Enclosure 4. The remaining 88 pages of Enclosure 4 are the full calculation prior to the minor revision.
Enclosure 5	Auxiliary Feedwater Pump Low Suction Pressure Service Water Switchover and Pump Trip Instrument Loop Uncertainty and Setpoint

References

(1) NRC electronic mail to NextEra Energy Point Beach, LLC, dated November 2, 2009, Point Beach Nuclear Plant, Units 1 and 2 - Request for Additional Information from Instrumentation and Control Branch RE: Non-conservative Technical Specification (ML093060170

(2) FPL Energy Point Beach, LLC letter to NRC, dated April 7, 2009, License Amendment Request 261, Extended Power Uprate (ML091250564)

(3) NextEra Energy Point Beach, LLC letter to NRC, dated September 11, 2009, License Amendment Request 261, Extended Power Uprate Expedited Review Request (ML092570205)

ENCLOSURE 2

NEXTERA ENERGY POINT BEACH, LLC
POINT BEACH NUCLEAR PLANT, UNITS 1 AND 2

LICENSE AMENDMENT REQUEST 261
EXTENDED POWER UPRATE
RESPONSE TO REQUEST FOR ADDITIONAL INFORMATION

PRESSURIZER PRESSURE INSTRUMENT LOOP
UNCERTAINTY AND SETPOINT CALCULATION

161 pages follow

Table of Contents

1.0 BACKGROUND, PURPOSE, AND SCOPE OF CALCULATION 7
1.1 Background 7
1.2 Purpose 8
1.3 Purpose of This Revision 8
1.4 Scope 8
1.5 Instrumentation Evaluated 8
1.6 Superseded Station Calculations 9
2.0 ACCEPTANCE CRITERIA 9
3.0 ABBREVIATIONS 10
4.0 REFERENCES 11
4.1 General 11
4.2 Drawings 13
4.3 Procedures 15
4.4 Vendor 17
4.5 Calculations 18
5.0 ASSUMPTIONS 18
5.1 Validated Assumptions 19
5.2 Unvalidated Assumptions 19
6.0 DESIGN INPUTS 20
6.1 Loop Definitions 20
6.2 Loop Block Diagram 20
6.3 Component Models and Tag Numbers 21
6.4 Environmental Considerations 22
6.5 Existing Analytical Limit (AL), Tech Spec Allowable Value (AV) and Field Trip Setpoint (FTSP) 24
6.6 Accident Ambient Pressure Consideration 25
6.7 Trip Actuation Requirement 25
6.8 Signal Cables 28
6.9 Calibrated Ranges 28
6.10 Insulation Resistance Effect Consideration 29

Table of Contents

7.0 METHODOLOGY 30
7.1 Uncertainty Determination 30
7.2 Drift Considerations 40
7.3 Multiple Analytical Limits Considerations 40
7.4 Margin-to-Trip Evaluation 40
8.0 BODY OF CALCULATION 42
8.1 Device Uncertainty Analysis 42
8.2 Device Uncertainty Summary 61
8.3 Total Loop Errors 64
8.4 Setpoint Evaluations 68
8.5 Operability Limit Determination 71
8.6 Acceptable As-Left and As-Found Calibration Tolerances 80
8.7 Channel Check Tolerances 85
8.8 Scaling 86
9.0 RESULTS AND CONCLUSIONS, WITH LIMITATIONS 94
9.1 Analytical Limits (AL) 94
9.2 Operability Limits (OL) 94
9.3 Calculated Setpoints (LTSP/SP) and Field Trip Setpoints (FTSP) 96
9.4 Tech Spec Surveillance 97
9.5 Channel Check Tolerances 97
9.6 Acceptable As-Left and As-Found Tolerances 97
9.7 Scaling 98
9.8 Limitations 98
9.9 Graphical Representation of Setpoint Parameters 101
10.0 IMPACT ON PLANT DOCUMENTS 108
11.0 ATTACHMENT LIST 112
12.0 10 CFR 50.59 REVIEW 112

1.0 BACKGROUND, PURPOSE, AND SCOPE OF CALCULATION

1.1 Background

The Pressurizer (PZR) Pressure channels, P-429, P-430, P-431 and P-449, perform protection, control, alarm, and indication functions. All four channels provide inputs to the Reactor Protection System (RPS) to automatically trip the reactor on high and low PZR Pressure, and provide indication to the control room operators. The PZR Pressure channels, P-429, P-430 and P-431 also provide inputs to the Engineered Safety Features Actuation System (ESFAS) to actuate the Safety Injection (SI) signal.

1.1.1 Low PZR Pressure Reactor Trip

The Low PZR Pressure trip function ensures that protection is provided against violating the Departure from Nucleate Boiling Ratio (DNBR) limit (see FSAR Section 3.2.2 for a detailed discussion of DNBR) due to low pressure. The reactor is tripped when two-out-of-four low PZR Pressure signals are below the setpoint (Ref. D.37 and D.40). This trip is automatically blocked by the P-7 permissive (Ref. D.39), when three-out-of-four power range channels (Ref. D.39) are below approximately 10% power, and one-out-of-two turbine first stage pressure channels (Ref. D.39) are below approximately 10% of full load turbine pressure. PZR Pressure channels, P-429, P-430, P-431 and P-449, are used to monitor Low PZR Pressure. The Lead/Lag module time constant evaluation is not within the scope of this calculation.

1.1.2 High PZR Pressure Reactor Trip

The High PZR Pressure trip function ensures that protection is provided against over-pressurizing the Reactor Coolant System (RCS) (see Tech Spec Bases B 2.1.2 for a detailed discussion of RCS pressure). The reactor is tripped when two-out-of-three PZR Pressure signals are above the setpoint (Ref. D.37 and D.40). PZR Pressure channels, P-429, P-430 and P-431, are used to monitor High PZR Pressure.

1.1.3 Low PZR Pressure SI Actuation

The Low PZR Pressure channels utilize a two-out-of-three coincidence circuit to provide input to ESFAS for actuation of safety injection (Ref. D.38). This coincident arrangement prevents false actuation of the SI signal in event of a spurious pressure signal. This signal provides protection against the following accidents: 1) Inadvertent opening of a steam generator (SG) relief or safety valve. 2) Steam line break. 3) A spectrum of rod cluster control assembly ejection accidents (rod ejection). 4) Loss-of-coolant accident and 5) Steam Generator tube rupture. To prevent unnecessary SI actuation during normal plant shutdown/cooldown due to low PZR Pressure, a manual SI block function is provided (Ref. D.38). Blocking SI actuation allows the primary system to be depressurized for maintenance and refueling operations without causing safety injection actuation.

1.1.4 PZR Pressure SI Unblock

The PZR Pressure SI Block signal utilizes a two-out-of-three (Ref. D.38) coincidence circuit to provide input to ESFAS to allow the operator to manually

block the SI signal. This is to provide the flexibility in unit operations. The manual block function is interlocked with PZR Pressure in such a way that the blocking action is automatically removed (unblocked) above the SI Block setpoint as normal operating pressure is approached (Ref. D.38).

1.2 Purpose

This calculation determines the instrument and loop uncertainties, Limiting Trip Setpoints, Operability Limits, As-Found Tolerance and As-Left Tolerance associated with the High and Low PZR Pressure reactor trip functions, ESFAS SI actuation and SI unblock/block functions, and control room indication for current plant operation and for Extended Power Uprate. This calculation also provides input to calculation WEP-SPT-21 for EOP setpoint determination.

1.3 Purpose of this Revision

Revision 0 of this calculation supersedes previous setpoint/uncertainty calculation PBNP-IC-12, including the draft revision of PBNP-IC-12 prepared by the CRR Project in 2007.

1.4 Scope

The scope of this calculation is listed below:

- Determine loop uncertainties for the pressurizer pressure reactor trip functions, ESFAS SI initiation and block functions, control board indication and PPCS indication.
- Determine Operability Limits (OL) for the reactor trip and ESFAS functions.
- Determine the Limiting Trip Setpoints (LTSP) for the reactor trip and ESFAS functions.
- Evaluate existing Field Trip Setpoints (FTSP) for the reactor trip and ESFAS functions.
- Determine Acceptable As-Found/As-Left Calibration Tolerances for the applicable devices listed in Table 1.5-1.
- Determine Channel Check Tolerance.
- Develop scaling values for the calibration procedures for the reactor trip and ESFAS functions.

Other pressurizer pressure functions such as RCS pressure control setpoints, PORV control setpoints and high and low pressure alarm setpoints are discussed in calculation PBNP-IC-45.

1.5 Instrumentation Evaluated

This calculation evaluates the plant equipment (for Units 1 and 2) listed in the table below. See Sections 6.2 and 6.3 of this calculation for instrument specifications, parameters, and loop configurations.

Table 1.5-1. Instrumentation List

Pressure Transmitters	Power Supplies	High Pressure Bistables (RPS)	Lead/Lag	Low Pressure Bistables (RPS)	SI Bistables (ESFAS)	I/I Converters	Indicators
1(2) PT-429	1(2) PQ-429	1(2) PC-429A	1(2) PM-429B	1(2) PC-429E	1(2) PC-429D/C	1(2) PM-429A	1(2) PI-429
1(2) PT-430	1(2) PQ-430	1(2) PC-430A	1(2) PM-430C	1(2) PC-430H	1(2) PC-430E/F	1(2) PM-430A	1(2) PI-430
1(2) PT-431	1(2) PQ-431	1(2) PC-431A	1(2) PM-431C	1(2) PC-431J	1(2) PC-431I/G	1(2) PM-431A	1(2) PI-431
1(2) PT-449	1(2) PQ-449	N/A	1(2) PM-449B	1(2) PC-449A	N/A	1(2) PM-449A	1(2) PI-449

1.6 Superseded Station Calculations

Existing calculations PBNP-IC-12 and PBNP-IC-31 will be superseded upon issuance of this calculation.

2.0 ACCEPTANCE CRITERIA

2.1 Positive margin is required between the Limiting Trip Setpoint (LTSP) and the Field Trip Setpoint (FTSP) for primary trips. The LTSP is calculated to ensure that the instrument channel trip occurs at or before the associated AL is reached. The LTSP is then compared to the FTSP to ensure that margin exists between the LTSP and the FTSP. Margin exists if the FTSP is less than the LTSP (for increasing setpoints) or the FTSP is greater than the LTSP (for decreasing setpoints). This criterion only applies to primary trips because backup trip functions and permissives lack an analytical limit and therefore are not required to trip at a particular value to support the accident analyses.

2.2 The Margin-to-Trip values determined from the Low and High PZR Pressure Reactor Trip FTSPs must be below the peak process pressure for the low trip and above the minimum process pressure for the high trip.

2.3 The FTSP for the Low PZR Pressure SI Actuation must be no lower than 1715 psig, as detailed in Reference G.55.

2.4 The Operability Limits calculated for primary trips must be more conservative than the corresponding Limiting Trip Setpoint. This will allow the Technical Specification tables for RPS and ESFAS trip functions to be revised to insert the LTSPs as new Allowable Values for the primary trip functions but use the more restrictive Operability Limits for channel operability determination during surveillance (COT) testing.

2.5 Channel Check Tolerance (CCT) is the maximum expected deviation between channel indications when performing a qualitative assessment of channel behavior during operation. The calculated CCT will be compared to the existing CCT to ensure that the existing CCT is ≤ the calculated CCT. If the existing CCT is non-conservative, a recommendation will be made to revise the existing CCT to satisfy the calculated CCT limit.

3.0 ABBREVIATIONS

3.1	AL	Analytical Limit
3.2	AV	Allowable Value
3.3	BAL	Bistable Acceptable As-Left Tolerance
3.4	BAF	Bistable Acceptable As-Found Tolerance
3.5	CCT	Channel Check Tolerance
3.6	COT	Channel Operational Test
3.7	DNBR	Departure from Nucleate Boiling Ratio
3.8	EOP	Emergency Operating Procedure
3.9	ESFAS	Engineered Safety Features Actuation System
3.10	FSAR	Final Safety Analysis Report
3.11	FTSP	Existing Field Trip Setpoint
3.12	HELB	High Energy Line Break
3.13	IAF	Indicator Acceptable As-Found Tolerance
3.14	IAL	Indicator Acceptable As-Left Tolerance
3.15	I/I	Current-to-Current Converter
3.16	I/IAF	Current-to-Current Converter Acceptable As-Found Tolerance
3.17	I/IAL	Current-to-Current Converter Acceptable As-Left Tolerance
3.18	LLAF	Lead/Lag Module Acceptable As-Found Tolerance
3.19	LLAL	Lead/Lag Module Acceptable As-Left Tolerance
3.20	LOCA	Loss of Coolant Accident
3.21	LTSP	Limiting Trip Setpoint
3.22	M&TE	Measurement and Test Equipment
3.23	MSLB	Main Steam Line Break
3.24	PBNP	Point Beach Nuclear Plant
3.25	OC	Outside Containment
3.26	OL	Operability Limit
3.27	PL	Process Limit
3.28	PS	Process Span (engineering unit)
3.29	PZR	Pressurizer
3.30	RAD	Radiation Absorbed Dose
3.31	RE	Rack Error
3.32	RPS	Reactor Protection System
3.33	SAF	Sensor Acceptable As-Found Tolerance
3.34	SAL	Sensor Acceptable As-Left Tolerance
3.35	SI	Safety Injection
3.36	SBLOCA	Small Break Loss of Coolant Accident
3.37	SLB	Steam Line Break
3.38	SP	Setpoint
3.39	SR	Surveillance Requirement
3.40	SSE	Safe Shutdown Earthquake
3.41	SRSS	Square Root of the Sum of the Squares
3.42	Tech Spec	Technical Specifications
3.43	TLE	Total Loop Error
3.44	XMTR	Transmitter

4.0 REFERENCES

The revisions and/or dates of the references in this section are current as of 1/05/2009.

4.1 General

G.1 Point Beach Nuclear Plant Design Guideline DG-I01, Instrument Setpoint Methodology, Rev. 4

G.2 Point Beach Nuclear Plant Technical Specifications Section 3.3.1 (Amendments 201/206) and Bases B 3.3.1; Section 3.3.2 (Amendments 201/206) and Bases B 3.3.2; Section 3.4.1 (Amendments 201/206) and Bases B 3.4.1; Section 3.6.4 (Amendments 206/211) and Bases B 3.6.4; Section 3.6.5 (Amendments 201/206) and Bases B 3.6.5.

G.3 Point Beach Final Safety Analysis Report, Section 7.2 (2007 update); Section 7.3.3 (2008 update); Section 9.5 (1999 update); Section 9.8.1 (2008 update); Section 11.6 (2002 update); Section 14.0 (2007 update); Section 14.1.9 (2002 update); Sections 14.2.5 (2008 update), and 14.3.1 (2006 update); Section 14.3.2 (2008 update); and Section 14.3.4 (2006 update).

[Note: Reference numbers G.4 through G.11 are not used]

G.12 ASME Steam Tables For Industrial Use (Based on the IAPWS Industrial Formulation 1997), CRTD - Vol. 58, copyrighted 2000

G.13 PBNP Condition Report A/R 141685 (CR 95-109) Evaluation, dated February 22, 1995

G.14 Westinghouse Correspondence WEP-06-23, dated March 28, 2006, "Input for Current Analysis of Record (RPS/ESFAS)"

G.15 WCAP-8587, Rev. 6-A, "Methodology for Qualifying Westinghouse WRD Supplied NSSS Safety Related Electrical Equipment", dated March 1983

G.16 Bechtel Specification No. 6118-M-40, Rev.1, "Specification for Heating, Ventilating and Air Conditioning Controls"

G.17 Modification Package IC-259, "Seismic Pressure and Differential Pressure (Unit 1)", completed 7/25/85

G.18 Modification Package IC-260, "Seismic Pressure and Differential Pressure (Unit 2)", completed 7/25/85

G.19 SPEC-0852, Rev. 2, "Structural Design Criteria for the Point Beach Nuclear Plant", dated July 1967

G.20 WEP-05-209, dated July 16, 2005, "High Head Safety Injection Pump Spin-Up Time Accident Analysis Evaluation"

G.21 NPC-36703, Seismic Evaluation Report, USNRC Generic Letter 87-02, USI A-46 Resolution, Revision 1, dated January 1996

G.22 NPC 2002-00282-V1, "Power Uprate Project – NSSS Engineering Report", dated April 2002

G.23 Report 1-PM-429B, "Instrument Traveler Sheet – Refurbishment Project", dated 04/17/89

G.24 Report 1-PM-430C, "Instrument Traveler Sheet – Refurbishment Project", dated 04/24/90

G.25 Report 1-PM-431C, "Instrument Traveler Sheet – Refurbishment Project", dated 04/24/89

G.26 Report 1-PM-449B, "Instrument Traveler Sheet – Refurbishment Project", dated 04/19/90

G.27 Report 2-PM-429B, "Instrument Traveler Sheet – Refurbishment Project", dated 10/07/89

G.28 Report 2-PM-430C, "Instrument Traveler Sheet – Refurbishment Project", dated 10/16/89

G.29 Report 2-PM-431C, "Instrument Traveler Sheet – Refurbishment Project", dated 10/11/89

G.30 Report 2-PM-449B, "Instrument Traveler Sheet – Refurbishment Project", dated 10/07/89

G.31 PBF-2034, Rev. 70, "Daily Logsheet, Control Room Log – Unit 1", pages 90, 91 and 92

G.32 PBF-2035, Rev. 70, "Daily Logsheet, Control Room Log – Unit 2", pages 90, 91 and 92

G.33 WEP-97-522, dated May 29, 1997, "Containment Analysis Assuming Reduced Fan Cooler Performance"

G.34 PBNP DIT No. CRR-I&C-006, dated 2/17/2006, Regarding Elevated Temperature Impacts on Control Room Indicators

G.35 EQCK-RAYC-006, Rev. 0, "Checklist for Environmental Qualification Assessment of Original Plant (DOR) Raychem/Bechtel Splices at Westinghouse Canister Penetrations per Bechtel Drawings SK-E-165, Revision 1"

G.36 Westinghouse Topical Report WCAP 7410-L, Volume II of II, "Environmental Testing of Engineered Safety Features Related Equipment (NSSS – NONSTANDARD SCOPE)"

G.37 PBNP CARDS Records for the following cables (printed 9/5/05):

Transmitter	Cable Number
1PT-429	ZK1I429-Q
2PT-429	ZP2I429-Q
1PT-430	1I430-O
2PT-430	ZQ2I430-O
1PT-431	ZM1I431 -7
2PT-431	2I431-7
1PT-449	1I449-H
2PT-449	2I449-H

G.38 WEP-05-283, dated September 23, 2005, "Final Evaluation of the Impact of Degradation to Containment Spray Pump and Fan Cooler Performance"

G.39 Westinghouse Report PEN-TR-83-13, Rev. 2, "Records Research of Cables Supplied to Wisconsin Electric Power Company Point Beach Nuclear Units #1 and #2"

G.40 Franklin Research Test Report F-C3594, dated January 1974, "Type Test Cable Qualification Program and Data for Nuclear Plant Designed Life Simulation Through Simultaneous Exposure"

G.41 EQCK-OKON-007, Rev. 0, "Checklist for Environmental Qualification Assessment of Okonite Company Okotherm (Silicone Rubber) Insulated Instrumentation Cables"

G.42 E-mail from Robert Francis of Wyle Laboratories to Asif Mohiuddin of S&L, confirmation of telecon regarding the relationship between LOCA/HELB Temperature Effect and Radiation Effect, dated 8/14/2006 (Attachment C)

G.43 BIW Report B901, "Flame and Radiation Resistant Cables for Nuclear Power Plants", dated September 1969

G.44 Walkdown Record Regarding Minor Divisions for PZR Pressure Indicators (PI-429, PI-430, PI-431 and PI-449A) (Attachment D)

G.45 Wisconsin Electric Nuclear Power Business Unit Design and Installation Guidelines, DG-I02, Rev. 0, "Instrument Scaling Methodology"

G.46 WCAP-7116, dated October 1969, "Precautions, Limitations and Set Points for Nuclear Steam Supply Systems"

G.47 WE Correspondence WES-74-41, dated 5/14/74, Regarding Setpoint Changes Resulting from Fuel Densification and Low Pressure Operation, Cycle 3

G.48 NPC-26697, dated 8/26/75, Docket No. 50-266, Amendment to Facility Operating License

G.49 WE Correspondence WEP-94-875, dated 12/15/94, Resolution of Questions on PBNP ESFAS Draft DBD

G.50 Wyle Laboratories Test Report 58442-1, dated May 15, 1980, "Environmental Qualification Test Report for Raychem WCSF-N Nuclear In-Line Cable Splice Assemblies for Raychem Corporation, Menlo Park, California"

G.51 WCAP-15934, dated November 2002, "Point Beach Nuclear Plant, Units 1 and 2, Steamline Break Mass and Energy Release Analysis Outside Containment"

G.52 NPC 1999-05997, Rev. 2, "Reload Transition Safety Report"

G.53 NPC-28427, dated September 1, 1983, "Implementation of Regulatory Guide 1.97 for Emergency Response Capability, Point Beach Nuclear Plant, Units 1 and 2"

G.54 Westinghouse Owners Group, ERG Footnote Basis Document, Footnotes A.01 through A.08, March 2001

G.55 WEP-07-31, "Westinghouse Responses to Point Beach Low PZR Pressure Related SI and Reactor Trip Analytical Limits Questions", dated May 4, 2007

G.56 NPM 2007-0151, "Position Paper on Transmitter Environmental Uncertainties for PBNP-IC-12, 'Pressurizer Pressure Uncertainty/Setpoint Calculation'", dated April 27, 2007 (Attachment F)

G.57 Specification 6118-E-30D, Rev. 1 , "Specification for Instrumentation and Special Cable", Item #4, dated May 26, 1968

G.58 Design Information Transmittal (DIT) CRR-I&C-014 dated 8/23/07, Supplement to Section 3.3.8 of PBNP Design Guide DG-I01 Rev 4, Methodology to determine the Operability Limit

G.59 Westinghouse letter WEP-09-2: "RPS/ESFAS Safety Analysis Limit Setpoint Change for the Point Beach Uprate Program" dated 1/8/09

4.2 Drawings

D.1 BD-10 JOB 10668, Rev. 4, "Block Diagram-Instrument, Reactor Protection System, Pressurizer Pressure Control, PBNP Unit 1"

D.2 BD-10 JOB 10665, Rev. 3, "Block Diagram-Instrument, Reactor Protection System, Pressurizer Pressure Control, PBNP Unit 2"

D.3 BD-13, Sheet 1, Rev. 14, "Block Diagram-Instrument, Reactor Control System, Pressurizer Pressure Control, PBNP Unit 1"

D.4 BD-13, Rev. 16, "Block Diagram-Instrument, Reactor Control System, Pressurizer Pressure Control, PBNP Unit 2"

D.5 0082, Sheet 10 (977-82, Sheet 10), Rev. 9, "Cable Spreading Room Air Conditioning System Rack C58"

D.6 CD-2 JOB 10668, Sheet 2, Rev. 10, "Wiring Diagram – Interconnect, Reactor Control System Rack 1R1 (1C111) Bottom", PBNP Unit 1

D.7 CD-4 JOB 10668, Sheet 2, Rev. 12, "Wiring Diagram – Interconnect, Reactor Control System Rack 1W1 (1C113) Bottom", PBNP Unit 1

D.8 CD-6 JOB 10668, Sheet 2, Rev. 11, "Wiring Diagram – Interconnect, Reactor Control System Rack 1B1 (1C116) Bottom", PBNP Unit 1

D.9 CD-8 JOB 10668, Sheet 2, Rev. 8, "Wiring Diagram – Interconnect, Reactor Protection System Rack 1-Y1 (1C118) Bottom", PBNP Unit 1

D.10 CD-2 JOB 10665, Sheet 2, Rev. 6, "Wiring Diagram – Interconnect, Reactor Control System Rack 2R1 (2C111) Bottom", PBNP Unit 2

D.11 CD-4 JOB 10665, Sheet 2, Rev. 9, "Wiring Diagram – Interconnect, Reactor Control System Rack 2W1 (2C113) Bottom", PBNP Unit 2

D.12 CD-6 JOB 10665, Sheet 2, Rev. 7, "Wiring Diagram – Interconnect, Reactor Control System Rack 2B1 (2C116) Bottom", PBNP Unit 2

D.13 CD-8 JOB 10665, Sheet 2, Rev. 6, "Wiring Diagram – Interconnect, Reactor Protection System Rack 2-Y1 (2C118) Bottom", PBNP Unit 2

D.14 PW-2, Sheet 1, Rev. 9, "Wiring Diagram – Term. Blocks, Reactor Protection System, Rack 1R1 (1C111)", PBNP Unit 1

D.15 PW-2 JOB 10665, Rev. 8, "Wiring Diagram – Term. Blocks, Reactor Protection System, Rack 2R1 (2C111)", PBNP Unit 2

D.16 PW-4, Sheet 1, Rev. 11, "Wiring Diagram – Term. Blocks, Reactor Protection System, Rack 1W1 (1C113)", PBNP Unit 1

D.17 PW-4 JOB 10665, Rev. 10, "Wiring Diagram – Term. Blocks, Reactor Protection System, Rack 2W1 (2C113)", PBNP Unit 2

D.18 PW-6, Sheet 1, Rev. 10, "Wiring Diagram – Term. Blocks, Reactor Protection System, Rack 1B1 (1C116)", PBNP Unit 1

D.19 PW-6 JOB 10665, Rev. 7, "Wiring Diagram – Term. Blocks, Reactor Protection System, Rack 2B1 (2C116)", PBNP Unit 2

D.20 PW-8, Sheet 1, Rev. 10, "Wiring Diagram – Term. Blocks, Reactor Protection System, Rack 1Y1 (1C118)", PBNP Unit 1

D.21 PW-8, Rev. 8, "Wiring Diagram – Term. Blocks, Reactor Protection System, Rack 2Y1 (2C118)", PBNP Unit 2

D.22 E-94, Sheet 28, Rev. 14, "Connection Diagram, Local Control Boards and Racks, Rack No. 1C111", PBNP Unit 1

D.23 E-2094, Sheet 28, Rev. 11, "Connection Diagram, Local Control Boards and Racks, Rack #2C111", PBNP Unit 2

D.24 E-94, Sheet 30, Rev. 19, "Connection Diagram, Local Control Boards and Racks, Rack No. 1C113", PBNP Unit 1

D.25 E-2094, Sheet 30, Rev. 12, "Connection Diagram, Local Control Boards and Racks, Rack #2C113", PBNP Unit 2

D.26 E-94, Sheet 33, Rev. 13, "Connection Diagram, Local Control Boards and Racks, Rack No. 1C116", PBNP Unit 1

D.27 E-2094, Sheet 33, Rev. 8, "Connection Diagram, Local Control Boards and Racks, Rack No. 2C116", PBNP Unit 2

D.28 E-94, Sheet 35, Rev. 14, "Connection Diagram, Local Control Boards and Racks, Rack No. 1C118", PBNP Unit 1

D.29 E-2094, Sheet 35, Rev. 9, "Connection Diagram, Local Control Boards and Racks, Rack No. 2C118", PBNP Unit 2

D.30 E-99, Sheet 6, Rev. 26, "Connection Diagram, 1Q06 1Q11 1Q24", PBNP Unit 1

D.31 E-2099, Sheet 6, Rev. 23, "Connection Diagram, Penetration 2Q06, 2Q11, & 2Q24", PBNP Unit 2

D.32 E-99, Sheet 7, Rev. 25, "Connection Diagram, Penetration 1Q12, 1Q19, 1Q25, 1Q55, 1Q56", PBNP Unit 1

D.33 E-2099, Sheet 7, Rev. 20, "Connection Diagram, Penetration 2Q12, 2Q19, 2Q25, 2Q55 & 2Q56", PBNP Unit 2

D.34 E-98, Sheet 30, Rev. 47, "Connection Diagram, Local Devices – Instrumentation" PBNP Unit 1

D.35 E-2098, Sheet 21, Rev. 41, "Connection Diagram, Local Devices – Instrumentation", PBNP Unit 2

D.36 SKE-165, Rev. 2, "Penetration Lead Wire Splicing Requirements", Unit 1 & 2

D.37 883D195, Sheet 2, Rev. 9, "Logic Diagrams, Reactor Trip Signals", PBNP Units 1 & 2

D.38 883D195, Sheet 7, Rev. 21, "Logic Diagrams, Safeguards Actuation Signals", PBNP Units 1 & 2

D.39 883D195, Sheet 12, Rev. 10, "Logic Diagram – Nuclear Instr. Permissive & Blocks", PBNP Units 1 & 2

D.40 883D195, Sheet 13, Rev. 5, "Logic Diagram, Pressurizer Trip Signals", PBNP Units 1&2

4.3 Procedures

P.1 Deleted per Rev. 4 of this calculation

P.2 1ICP 02.001BL, Rev. 12, "Reactor Protection and Engineered Safety Features Blue Channel Analog 92 Day Surveillance Test"

P.3 1ICP 02.001RD, Rev. 9, "Reactor Protection and Engineered Safety Features Red Channel Analog 92 Day Surveillance Test"

P.4 1ICP 02.001WH, Rev. 11, "Reactor Protection and Engineered Safety Features White Channel Analog 92 Day Surveillance Test"

P.5 1ICP 02.001YL, Rev. 10, "Reactor Protection and Engineered Safety Features Yellow Channel Analog 92 Day Surveillance Test"

P.6 Deleted per Rev. 4 of this calculation

P.7 2ICP 02.001BL, Rev. 15, "Reactor Protection and Engineered Safety Features Blue Channel Analog 92 Day Surveillance Test"

P.8 2ICP 02.001RD, Rev. 11, "Reactor Protection and Engineered Safety Features Red Channel Analog 92 Day Surveillance Test"

P.9 2ICP 02.001WH, Rev. 11, "Reactor Protection and Engineered Safety Features White Channel Analog 92 Day Surveillance Test"

P.10 2ICP 02.001YL, Rev. 13, "Reactor Protection and Engineered Safety Features Yellow Channel Analog 92 Day Surveillance Test"

P.11 1ICP 04.001H, Rev. 5, "Reactor Protection and Safeguards Analog Racks Pressurizer Pressure Outage Calibration"

P.12 2ICP 04.001H, Rev. 6, "Reactor Protection and Safeguards Analog Racks Pressurizer Pressure Outage Calibration"

P.13 1ICP 04.004-1, Rev. 11, "Event V Test Pressure, RCS Wide Range, RC Hot Leg, Pressurizer, and RV Head Vent Pressure Instruments Outage Calibration"

P.14 2ICP 04.004-1, Rev. 10, "Event V Test Pressure, RCS Wide Range, RC Hot Leg, Pressurizer, and RV Head Vent Pressure Instruments Outage Calibration"

P.15 ICI 12, Rev. 8, "Selection of M&TE for Field Calibrations"

P.16 ICP 11.27, Rev. 0, "Special Maintenance Procedure, Installation of Seismic/ Environmental Qualified Transmitters 1LT-426, 1PT-429 and Seismic Support of 1PT-420, Modification Request IC-259"

P.17 ICP 11.28, Rev. 0, "Special Maintenance Procedure, Installation of Seismic/ Environmental Qualified Transmitters 1LT-427, 1PT-430, Modification Request IC-259"

P.18 ICP 11.29, Rev. 0, "Special Maintenance Procedure, Installation of Seismic/ Environmental Qualified Transmitters 1LT-428, 1PT-431, Modification Request IC-259"

P.19 ICP 11.30, Rev. 0, "Special Maintenance Procedure, Installation of Seismic/ Environmental Qualified Transmitters 1LT-433, 1PT-449 and Seismic Support of 1PT-493, Modification Request IC-259"

P.20 ICP 11.300, Rev. 0, "Special Maintenance Procedure, Installation of Seismic/ Environmental Qualified Transmitters 2LT-426, 2PT-429 and Seismic Support of 2PT-420, Modification Request IC-260"

P.21 ICP 11.301, Rev. 0, "Special Maintenance Procedure, Installation of Seismic/ Environmental Qualified Transmitters 2LT-427, 2PT-430, Modification Request IC-260"

P.22 ICP 11.302, Rev. 0, "Special Maintenance Procedure, Installation of Seismic/ Environmental Qualified Transmitters 2LT-428, 2PT-431, Modification Request IC-260"

P.23 ICP 11.133, Rev. 0, "Special Maintenance Procedure, Installation of Seismic/ Environmental Qualified Transmitters 2LT-433, 2PT-449 and Seismic Support of 2PT-493, Modification Request IC-260"

P.24 1ICP 02.020BL, Rev. 10, "Post-Refueling Pre-Startup RPS and ESF Blue Channel Analog Surveillance Test"

P.25 1ICP 02.020RD, Rev. 11, "Post-Refueling Pre-Startup RPS and ESF Red Channel Analog Surveillance Test"

P.26 1ICP 02.020WH, Rev. 10, "Post-Refueling Pre-Startup RPS and ESF White Channel Analog Surveillance Test"

P.27 1ICP 02.020YL, Rev. 10, "Post-Refueling Pre-Startup RPS and ESF Yellow Channel Analog Surveillance Test"

P.28 2ICP 02.020BL, Rev. 10, "Post-Refueling Pre-Startup RPS and ESF Blue Channel Analog Surveillance Test"

P.29 2ICP 02.020RD, Rev. 10, "Post-Refueling Pre-Startup RPS and ESF Red Channel Analog Surveillance Test"

P.30 2ICP 02.020WH, Rev. 10, "Post-Refueling Pre-Startup RPS and ESF White Channel Analog Surveillance Test"

P.31 2ICP 02.020YL, Rev. 10, "Post-Refueling Pre-Startup RPS and ESF Yellow Channel Analog Surveillance Test"

4.4 Vendor

V.1 Foxboro Instrumentation Composite Book 4, VTM 00623A4, Rev. 11 – Foxboro Specifications "Model 63U-B Duplex Alarm / Model 63U-F Duplex Difference Alarm", Sections 18-692, dated January 1969

V.2 Foxboro Instrumentation Composite Book 4, VTM 00623A4, Rev. 11 – Foxboro Specifications "Model 63U-A Duplex Alarm / Model 63U-E Duplex Difference Alarm", Sections 18-690, dated January 1969

V.3 Foxboro Instrumentation Composite Book 4, VTM 00623A4, Rev. 11 – Foxboro Technical Information TI 39-162c, dated February 1968, "66B Series Current Repeater, Style D"

V.4 Foxboro Instrumentation Composite Book 4, VTM 00623A4, Rev. 11 – Foxboro Specifications "Model 610A Power Supply, Styles B and C", Sections 18-635, dated November 1969

V.5 Foxboro Instrumentation Composite Book 4, VTM 00623A4, Rev. 11 – Foxboro Specifications G-3981 "Model 66R Dynamic Compensator (Lead/Lag and Impulse Units)", dated March 1973, Section 18-509

V.6 Foxboro Corporate Product Specification CPS-0804, Rev. G, "Nuclear Electronic Gauge Pressure Transmitters N-E11GM Series, Style A&B", VTM 00432, Rev. 21.

V.7 Westinghouse Component Instruction Manual, Main Control Board – Part 1, VTM 00132A, Rev. 25.

V.8 Johnson Controls Temperature Composite Book 2, VTM 00309B, Rev. 5 – T-4000 Series Pneumatic Room Thermostats (Tab – Thermostats & Thermometers)

V.9 User Guide HP 34401A Multimeter, VTM 01692, Rev. 0

4.5 Calculations

C.1 Westinghouse CN-TA-08-22, Rev. 0, "OPTOAX Analysis for Extended Power Uprate Program"

C.2 Westinghouse CN-TA-08-22, Rev. 1, "OPTOAX Analysis for Extended Power Uprate Program – Revision 1"

C.3 PBNP-IC-13, Rev. 0, "Foxboro N-E11GM Transmitters Drift Calculation".

C.4 WEP-SPT-21, Rev. 3, "Pressurizer Pressure EOP Setpoints"

C.5 PBNP-IC-11, Rev. 0, "Foxboro 63U-AC Bistable Drift Calculation".

C.6 PBNP-IC-32, Rev. 3, "Pressurizer Pressure Scaling Calculation.

C.7 PBNP-IC-06, Rev. 0, "Foxboro 63U-BC Bistable Drift Calculation".

C.8 PBNP-IC-07, Rev. 0, "Westinghouse 252 Indicator Drift Calculation".

C.9 Engineering Evaluation No. 2005-0006, Rev. 0, "Drift Calculations Evaluation".

C.10 2003-0073, Rev. 0, "Re-evaluation of One Year Integrated Gamma Dose Level Inside Containment Based on PBNP Specific Containment Net Free Volume".

C.11 S&L Calculation 2006-16540, Rev. 0, "Foxboro Pressure Transmitters Acceptable Accuracy Limits During and After Postulated Seismic Event" (Attachment B)

C.12 Westinghouse CN-CRA-01-70, Rev. 0, "Point Beach SLB and Containment Response at 102% of 1524.5 MWt with FRV Failure"

C.13 Westinghouse CN-CRA-05-016, Rev. 1, "Point Beach Margin to Overfill"

C.14 Westinghouse CN-CRA-96-58, Rev. 1, "Steam Generator Tube Rupture Analysis for the Point Beach Units 1 & 2"

C.15 WEP-SPT-29-01-A, Rev. 0, "Containment Parameter EOP Setpoints / Addendum for M.13"

C.16 Westinghouse CN-LIS-08-15, Rev 1, "Extended Power Uprate (EPU) Small Break LOCA (SBLOCA) Analysis"

C.17 Westinghouse CN-LIS-08-91 Rev 0, "Extended Power Uprate BELOCA ASTRUM Analysis: Units 1 and 2 (WEP/WIS) Uncertainty Analysis"

C.18 Westinghouse CN-TA-08-60, Rev. 0, "Loss to Load/Turbine Trip (LOL/TT) Analysis for the Extended Power Uprate (EPU) Program"

C.19 Westinghouse CN-CRA-08-19, Rev. 2, "EPU Steamline Break Mass and Energy Releases Outside Containment"

C.20 Westinghouse CN-CPS-08-20, Rev. 0, "Plant Operability Margin to Trip and EOC Coastdown Analysis for Point Beach Units 1 and 2 Extended Power Uprate Program"

C.21 Westinghouse CN-CRA-08-6, Rev 1, "Point Beach Units 1 and 2 (WEP/WIS) LOCA Mass and Energy Release and Containment Response Analysis for the EPU Program"

C.22 Westinghouse CN-CRA-08-43, Rev 0, "Point Beach EPU: Units 1 (WEP) and 2 (WIS) SLB Inside Containment Response"

5.0 ASSUMPTIONS

5.1 Validated Assumptions

5.1.1 It is assumed that the maximum power supply effect for the I/I Converters (current isolators) is 1.0 % span and this effect is considered a random error.

Basis: PBNP evaluation of A/R 141685 (CR 95-109) (Ref. G.8) indicates that the I/I Converter output fluctuates between 0.5 to 1.0 % due to the effect on the non-regulated portion of the internal 50 volt power supply in which the I/I converter is connected. Furthermore, this error should be treated as random not a bias. Therefore, the maximum fluctuation of ± 1 % is used in this calculation as the power supply effect for the I/I Converter.

5.1.2 It is assumed that the As-Left setting tolerances for the instruments evaluated in this calculation are as follows:

Transmitters	=	± 0.20 mAdc
Bistables	=	± 0.002 Vdc
Lead/Lag Module	=	± 0.002 Vdc
Current-to-Current Converter	=	± 0.10 mAdc
Control Board Indicator	=	± 0.80 mAdc

Basis: These As-Left setting tolerance values have historically provided acceptable instrument performance and consistency in the calibration program. These As-Left setting tolerances are routinely achievable for the installed instruments, consistent with safety limits and test equipment capability. They are currently used in practice at the station, and implemented by calibration procedures listed in References P.2 through P.5 and P.7 through P.14. As-Found setting tolerances are to be determined in this calculation.

5.1.3 It is assumed that the maximum environmental temperature of Control Room and Computer Room instrumentation is 120 °F.

Basis: Table 6-1 of WCAP-8587 (Ref. G.15) states that when the HVAC is non-safety related, a normal temperature of 120 °F (loss of chiller) should be used. Since the Control Room and Computer Room HVAC System chiller is not powered from an essential power bus, the Control Room and Computer Room HVAC System is considered as a non-safety related system.

5.1.4 If an analytical limit is beyond the calibrated range of a transmitter, it is assumed that the starting point for the setpoint evaluation is considered to be the upper or lower limit (for increasing or decreasing setpoints, respectively) of the calibrated range.

Basis: WEP-07-31, "Westinghouse Responses to Point Beach Low PZR Pressure Related SI and Reactor Trip Analytical Limits Questions", dated May 4, 2007 (Reference G.55).

5.2 Unvalidated Assumptions

None

6.0 DESIGN INPUTS

6.1 Loop Definitions

The PZR Pressure instrument loops analyzed in this calculation are shown in block diagram format in References D.1 through D.4 for Units 1 and 2, and explained in more detail in the following sections (6.2 and 6.3).

6.2 Loop Block Diagram

The block diagrams below (Figures 6.2-1 and 6.2-2) show the component configuration for the PZR Pressure instrument loops that are addressed in this calculation. The diagrams are generic for loops P-429, P-430, P-431 and P-449 for both Units 1 and 2. See References D.1 – D.4 and D.6 – D.13 for more details.

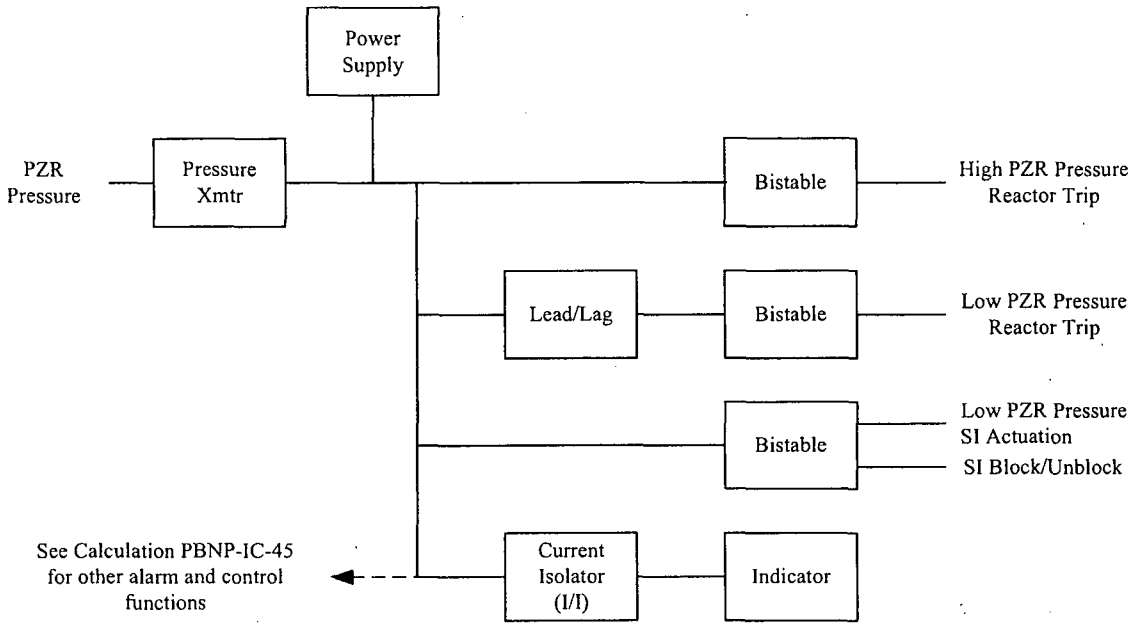

Figure 6.2-1 PZR Pressure Instrument Loops P-429, 430 & 431

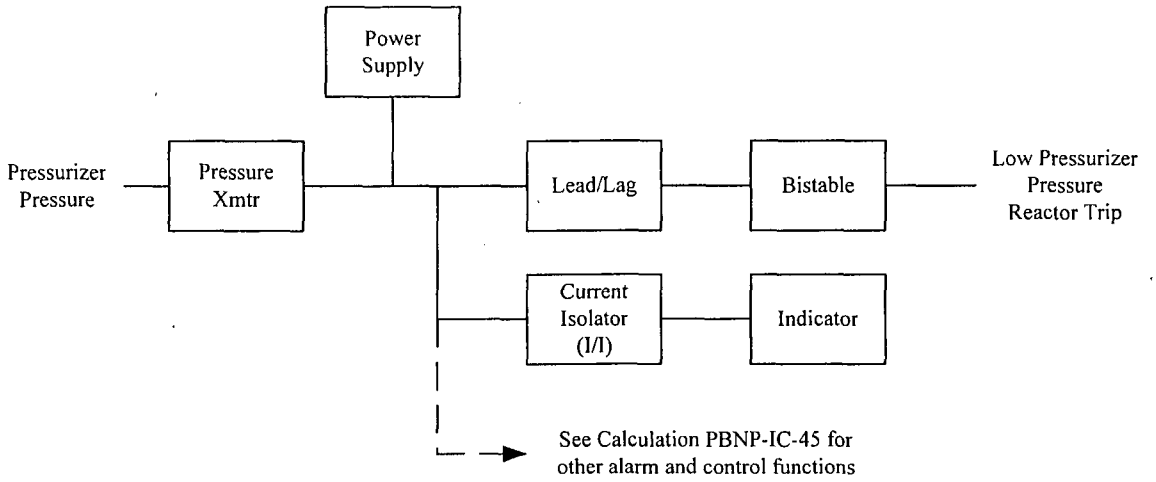

Figure 6.2-2 PZR Pressure Instrument Loop P-449

6.3 Component Models and Tag Numbers

The following table identifies each component shown in Figures 6.2-1 and 6.2-2 for each of the PZR Pressure instrument loops (these tag numbers are applicable to both Units 1 and 2) addressed in this calculation, and provides the associated plant information for use throughout this calculation.

Table 6.3-1 PZR Pressure Instruments

Component	Model	P-429	P-430	P-431	P-449	Reference(s)
Transmitter	Foxboro N-E11GM-HIE1-BEL	PT-429	PT-430	PT-431	PT-449	G.17, G.18
Power Supply	Foxboro 610AC-O	PQ-429	PQ-430	PQ-431	PQ-449	D.1, D.2
Lead/Lag	Foxboro 66RC	PM-429B	PM-430C	PM-431C	PM-449B	D.1, D.2
PZR Low-Pressure Reactor Trip Bistable	Foxboro 63U-AC-OHAA	PC-429E	PC-430H	PC-431J	PC-449A	D.1, D.2
PZR High Pressure Reactor Trip Bistable	Foxboro 63U-AC-OHBA	PC-429A	PC-430A	PC-431A	N/A	D.1, D.2
PZR Pressure Low SI / SI Unblock Bistable	Foxboro 63U-BC-OHEA	PC-429D/C	PC-430E/F	PC-431I/G	N/A	D.1, D.2
Current-to-Current Converter (Current Isolator)	Foxboro 66BC-O	PM-429A	PM-430A	PM-431A	PM-449A	D.1, D.2
PZR Pressure Control Board Indicator	Westinghouse HX-252	PI-429	PI-430	PI-431	PI-449	P.11, P.12

6.4 Environmental Considerations

The PZR Pressure channels P-429, P-430, P-431 and P-449, shown in block diagram form in Figures 6.2-1 and 6.2-2, provide input to the Engineered Safety Features Actuation System (ESFAS), Reactor Protection System (RPS) and indication in the control room.

Reference G.53 classifies PZR Pressure as a Regulatory Guide 1.97 Type B, C and D variable. However, in accordance with Westinghouse Owners Group Emergency Response Guideline (ERG) guidance (Ref. G.54), instrument uncertainties are not included in the determination of PZR Pressure EOP setpoints. Therefore, even though PZR Pressure is a Reg. Guide 1.97 variable, only normal operating environmental conditions are considered for the control room indicators.

The Control Room Indicators are also used to monitor PZR Pressure for Tech Spec compliance (SR 3.3.1.1, and SR 3.3.2.1 and SR 3.4.1.1) (Ref. G.2). PZR Pressure values are monitored and recorded in operator logs (Ref. G.31 and G.32) to ensure Tech Spec compliance. Routine surveillance of Control Room Indication for Tech Spec compliance for a specific process is performed during normal plant operating conditions only.

As Listed in Tech Spec Tables 3.3.1-1 and 3.3.2-1 (Ref. G.2), the three PZR Pressure loops P-429, P-430, and P-431 provide input to the ESFAS by initiating a SI Signal on Low PZR Pressure. The three PZR Pressure loops plus loop P-449 also provide input to the RPS by initiating a Reactor Trip signal on High and Low PZR Pressure. The SI and Reactor Trip signals are safety-related functions.

The general environmental considerations for each individual RPS and ESFAS function are discussed in Attachment E and summarized below:

Table 6.4-1 Attachment E Environmental Conditions

Function	Environmental Conditions
Low PZR Pressure Reactor Trip – Dropped Rod at current power	Normal
Low PZR Pressure Reactor Trip – SBLOCA at current power	Accident
Low PZR Pressure Reactor Trip – OTPOAX at EPU power	Normal
High PZR Pressure Reactor Trip – Loss of Load (both current and EPU power levels)	Normal
Low PZR Pressure SI – SLB(OC)	Normal
Low PZR Pressure SI – SBLOCA	Accident
PZR Pressure SI Block/Unblock	Normal

6.4.1 Containment Building

Per References P.13 and P.14, the PZR Pressure Transmitters are located inside the containment, outside the secondary shield wall.

Point Beach Structural Design Criteria (Reference G.19) states that the design temperature inside the containment is 286 °F. Tech Spec Bases B 3.6.5

(Reference G.2) supports the design air temperature of 286 °F but also identifies 291 °F as being the maximum containment air temperature associated with a Loss of Coolant (LOCA) event.

The maximum air temperature of 291 °F identified by Reference G.2 reflects superheated steam conditions that occur, as the heat sinks become effective. This superheated steam is ineffective at heat transfer and the dominant heat transfer mechanism will be steam condensation on surfaces of concrete and steel in the containment building. This is consistent with the guidance provided in NUREG-0800, Section 6.2.1.5 and NUREG-0588, Revision 1. Therefore, 286°F is considered the maximum adverse temperature for this calculation.

For EPU, containment integrity analyses were revised in calculations CN-CRA-08-6 (LOCA) and CN-CRA-08-43 (SLB) for the EPU condition [References C.21 and C.22]. Both analyses demonstrate that the peak containment temperature did not increase above 286°F. The peak temperature under EPU conditions is 279.9°F for LOCA and 284.4°F for SLB.

Per Ref. G.13, the Containment Building maximum normal temperature outside the secondary shield wall is 120 °F and the minimum is 65 °F. This maximum temperature is consistent with the Containment temperature limit found in Technical Specifications (Reference G.2). In accordance with Section 3.3.4.7 of Reference G.1, the minimum temperature of 65 °F is conservatively used as the calibration temperature. Per Reference G.13, the Containment Building maximum normal humidity is 70 % and the maximum radiation is $< 3.5 \times 10^4$ RADs (40-year dose).

Per Sections A.2 and C.8 of Attachment E, the PZR Pressure Transmitters should be evaluated for post-accident containment environmental conditions for both the low pressure SI actuation and reactor trip functions. Per Reference G.56 (Attachment F), the maximum transmitter temperature in this case is 180°F. In order to differentiate this condition with the normal containment temperature condition discussed above, the elevated temperature condition will hereto forth be referred to as an accident condition. Furthermore, per Attachment E and F, normal radiation levels should be considered when evaluating for accident conditions.

Table 6.4-2 Containment Ambient Environmental Conditions

Conditions	Calibration Temp. (°F)	Max. Temp. (°F)	Humidity (%)	Radiation (RADs)
Normal	65	120	70	$< 3.5 \times 10^4$
Accident	65	286	70	$< 3.5 \times 10^4$
Accident (Transmitter Only)	65	180	70	$< 3.5 \times 10^4$

6.4.2 Control Room and Computer Room

The rack components are located in the Control Room (Ref. P.2 – P.5, P.7 – P.12 and D.6 – D.13).

The Control Room HVAC System controls the temperature of the Control Room and the Computer Room at 75 °F per Reference G.14. Per FSAR Section 9.8.1 (Ref. G.3), the temperature can vary ± 10 °F, resulting in a normal temperature range of 65 °F to 85 °F. This temperature variation is supported by the fact that the Johnson Controls T-4002-202 thermostat (Ref. D.5) in the Control Room is capable of controlling the room temperature (Ref.V.8) within these bounds. In accordance with Section 3.3.4.7 of Reference G.1, the minimum calibration temperature may conservatively be used and therefore the minimum temperature of 65°F is used as the calibration temperature for the components in the Control Room and Computer Room.

Since Tech Spec compliance surveillance monitoring (channel check) is only performed during normal plant operating conditions, 85 °F is used as the maximum temperature for this function. Per Assumption 5.1.3, the maximum expected temperature is 120 °F (loss of chiller). This maximum temperature of 120 °F is used for the trip function (safety-related variable). This function necessitates the instrumentation to operate under compromised environmental conditions caused by a loss of the HVAC Cooling Unit.

The Control Room humidity of 50% and 95% (loss of chiller) is documented in Reference G.13. Section 11.6.2 (fifth paragraph) of FSAR (Ref. G.3) states that the control room is in Zone I and FSAR Table 11.6-1 states the maximum dose rate in Zone I is 1.0 mrem/hr.

Table 6.4-3 Control Room and Computer Room Ambient Environmental Conditions

Function	Calibration Temp. (°F)	Max. Temperature (°F)	Humidity (%)	Radiation (RADs)
For Tech Spec Surveillance	65	85	50	1 mrem/hr
For Trip Actuation	65	120	95	1 mrem/hr

6.5 Existing Analytical Limit (AL), Tech Spec Allowable Value (AV) and Field Trip Setpoint (FTSP)

The Analytical Limits (AL) for RPS and ESFAS actuation parameters at Point Beach Unit 1 & 2 are discussed in Attachment E and summarized in Table 6.5-1. These limits are discussed further in Section 6.7 and Attachment E.

Table 6.5-1 PZR Pressure ESFAS/RPS Setpoints and Limits

ESFAS Trip Function	Current Analytical Limit (Attachment E)	EPU Analytical Limit (Attachment E)	Existing Tech Spec AV (Ref. G.2)	Field Trip Setpoint (Ref. P.2 – P.5 and P.7 – P.10)
Low PZR Pressure Reactor Trip	Dropped Rod ($AL_{L-RPS-ROD}$) – 1830 psia (1815 psig)	OPTOAX ($AL_{L-RPS-OPTOAX}$) 1855 psia (1840 psig)	≥ 1905 psig	1925.0 psig
	SBLOCA ($AL_{L-RPS-LOCA}$) – 1648 psig			
High PZR Pressure Reactor Trip	Loss of Load (AL_{H-RPS}) – 2425 psia (2410 psig)	Loss of Load ($AL_{H-RPS-LOL}$) 2418 psia (2403 psig)	≤ 2385 psig	2365.0 psig
Low PZR Pressure – SI Actuation	SBLOCA ($AL_{L-SI-LOCA}$) – 1649 psia (1625 psig)	SBLOCA ($AL_{L-SI-EPU-SBLOCA}$) – 1633 psia (1618 psig)	≥ 1715 psig	1735.0 psig
	SLB (OC) ($AL_{L-SI-SLB}$) – 1663 psia (1648 psig)	LBLOCA ($AL_{L-SI-EPU-LBLOCA}$) – 1663 psia (1648 psig)		
PZR Pressure SI Unblock	N/A	N/A	≤ 1800 psig	1775.0 psig
PZR Pressure SI Block	N/A	N/A	N/A	1765.0 psig

6.6 Accident Ambient Pressure Consideration

In the event of a high energy line break (HELB) in containment, such as a LOCA, the release of mass and energy to containment will cause the temperature and pressure to increase. Since the Low PZR Pressure reactor trip and the Low PZR Pressure SI Actuation are required to function following a SBLOCA (Reference G.12), the effects of any increase in containment temperature or pressure must be considered in evaluating these setpoints.

As discussed in Section 6.10 of this calculation, if the ambient temperature exceeds 220°F, the insulation resistance of the cable may be adversely affected. The effect of this degradation of the insulation is to add a bias which increases the total loop error. However, a high energy line break that causes the containment temperature to increase would also cause the containment pressure to increase, which introduces another bias. Attachment G demonstrates that, in an accident situation, the containment pressure will exceed 15 psig before the containment reaches the temperature (220°F) at which the insulation resistance must be taken into account.

6.7 Trip Actuation Requirement

A detailed discussion of the analytical (or other) limits and associated environmental conditions for the PZR Pressure protection functions is contained in Attachment E of this calculation. The results are summarized below.

6.7.1 Low PZR Pressure Reactor Trip – Current Power Level

The following analytical limits must be considered in establishing the Low PZR Pressure Reactor Trip limiting trip setpoint. For each limit, the appropriate environmental conditions must be included in the setpoint evaluation.

- Dropped rod: 1830 psia, normal containment environment
- SBLOCA: 1648 psig, post-accident containment environment

The analytical limit for the SBLOCA lies outside the PZR pressure transmitters' calibrated range of 1700 – 2500 psig (References P.13 and P.14). Per Assumption 5.1.4, the starting point of the setpoint evaluation is considered to be the lower limit of the pressure transmitter range. Therefore the limiting trip setpoint for the Low PZR Pressure Reactor Trip (SBLOCA) will be evaluated using the following limit:

- SBLOCA: 1700 psig, post-accident containment environment

The setpoint plus instrument uncertainty under normal containment environmental conditions should also remain below the following:

- Margin-to-Trip: 2136 psia

Because there are two analytical limits to consider, the limiting trip setpoint will be selected from the more limiting value determined by applying the TLE for the function and environment to the corresponding analytical limit.

6.7.2 Low PZR Pressure Reactor Trip – EPU

From Attachment E, the following analytical limit must be considered in establishing the Low PZR Pressure Reactor Trip limiting trip setpoint for EPU. The appropriate environmental conditions from Attachment E should be included in the setpoint evaluation.

- OPTOAX: 1855 psia, normal containment environment

<u>Margin-to-Trip</u>

Westinghouse Calculation CN-CPS-08-20 [Reference C.20] determined that normal operational transients under EPU conditions would not cause a low pressurizer pressure reactor trip, with margin. Refer to the calculation for the specific margin provided for different transients.

6.7.3 High PZR Pressure Reactor Trip – Current Power Level

The following analytical limit must be considered in establishing the High PZR Pressure Reactor Trip limiting trip setpoint. The appropriate environmental conditions must be included in the setpoint evaluation.

- Loss of load: 2425 psia, normal containment environment

The setpoint minus instrument uncertainty under normal containment environmental conditions should also remain above the following:

- Margin-to-Trip: 2351 psia

6.7.4 High PZR Pressure Reactor Trip – EPU

The following analytical limit must be considered in establishing the High PZR Pressure Reactor Trip limiting trip setpoint for EPU. The appropriate environmental conditions from Attachment E must be included in the setpoint evaluation.

- Loss of load: 2418 psia, normal containment environment

Margin-to-Trip

Westinghouse Calculation CN-CPS-08-20 [Reference C.20] determined that normal operational transients under EPU conditions would not cause a high pressurizer pressure reactor trip, with margin. Refer to the calculation for the specific margin provided for different transients.

6.7.5 Low PZR Pressure – SI Actuation

The following analytical limits must be considered in establishing the Low PZR Pressure – SI Actuation limiting trip setpoint. For each limit, the appropriate environmental conditions must be included in the setpoint evaluation.

- SBLOCA: 1625 psig, post-accident containment environment
- SLB (OC): 1663 psia, normal containment environment

The analytical limits lie outside the PZR pressure transmitter calibrated range of 1700 – 2500 psig (References P.13 and P.14). Per Assumption 5.1.4, the starting point of the setpoint evaluation is considered to be the lower limit of the pressure transmitter range. Since the starting point for both the SBLOCA and SLB(OC) cases would be the same, the SBLOCA case yields the more conservative setpoint evaluation due to the consideration of a post-accident containment environment. Therefore the limiting trip setpoint for the Low PZR Pressure SI Actuation will be evaluated using the following limit:

- 1700 psig, post-accident containment environment

The setpoint should also be no lower than the following:

- SGTR: 1715 psig

Margin-to-Trip

Westinghouse Calculation CN-CPS-08-20 [Reference C.20] determined that normal operational transients under EPU conditions would not cause a low pressurizer pressure SI actuation, with margin. Refer to the calculation for the specific margin provided for different transients.

6.7.6 PZR Pressure SI Block/Unblock

The pressurizer pressure safety injection block/unblock is a permissive. It is not credited as a primary or backup trip in any safety analysis (Ref. G.12).

The block setpoint should be higher than 1735 psig.

The unblock setpoint should be lower than 2185 psig.

Per Attachment E, it is recommended that the block permissive reset (unblock) value be established at 2000 psig and that the block permissive value be established below the block permissive reset value of 2000 psig but above the desired value of 1950 psig at which the operator would perform the manual block action. No formal calculation of the instrument uncertainty for either the block or block permissive reset (unblock) setpoints is required.

6.8 Signal Cables

The Following table lists the PZR Pressure Transmitter cables inside the containment and the relevant information required to calculate the Insulation Resistance (IR) effects:

Table 6.8-1 CARDS Cable Information

Transmitter	Cables	Length (ft)	MFR/ Type	Insulation	Penetration Number	References
1PT-429	ZK1I429-Q	175	Okonite, 2/C, #16	Silicone Rubber	1Q55	D.14, D.22, D.32, D.34, G.37
2PT-429	ZP2I429-Q	100	Okonite, 2/C, #16	Silicone Rubber	2Q55	D.15, D.23, D.33, D.35, G.37
1PT-430	1I430-O (ZL1I430-O)	170	Okonite, 2/C, #16	Silicone Rubber	1Q24	D.16, D.24, D.30, D.34, G.37
2PT-430	ZQ2I430-O	100	Okonite. 2/C, #16	Silicone Rubber	2Q24	D.17, D.25, D.31, D.35, G.37
1PT-431	ZM1I431 -7	105	Okonite, 2/C, #16	Silicone Rubber	1Q56	D.18, D.26, D.32, D.34, G.37
2PT-431	2I431-7 (ZR2I4317)	95	Okonite, 2/C, #16	Silicone Rubber	2Q56	D.19, D.27, D.33, D.35, G.37
1PT-449	1I449-H (ZN1I449H)	115	Okonite, 2/C, #16	Silicone Rubber	1Q19	D.20, D.28, D.32, D.34, G.37
2PT-449	2I449-H (ZS2I449H)	84	Okonite, 2/C, #16	Silicone Rubber	2Q19	D.21, D.29, D.33, D.35, G.37

6.9 Calibrated Ranges

The following table lists the calibrated input and output signal of each component of the PZR Pressure Instrument loops (Ref. P.2 through P.5 and P.7 through P.14). Note, calibration ranges shown with 0.1 to 0.5 Vdc is due to a 10 Ω resistor connected across the test point (Ref. D.6 through D.13).

Table 6.9-1 PZR Pressure Instruments Calibrated Ranges

Instrument Number	Input Range	Output Range	Reference
Pressure Transmitters 1(2)PT-429 1(2)PT-430 1(2)PT-431 1(2)PT-449	1700 – 2500 psig (span = 800 psi)	10 – 50 mAdc* (span = 40 mAdc)	D.1, D.2
Lead/Lag Modules 1(2)PM-429B 1(2)PM-430C 1(2)PM-431C 1(2)PM-449B	0.1000 – 0.5000 Vdc (span = 0.40 Vdc)	0.1000 – 0.5000 Vdc (span = 0.40 Vdc)	P.11, P.12
Bistables 1(2)PC-429A, E, D/C 1(2)PC-430A, H, E/F 1(2)PC-431A, J, I/G 1(2)PC-449A	0.1000 – 0.5000 Vdc (span = 0.40 Vdc)	Contact	P.2 – P.5, P.7 – P.10
I/I Converters 1(2)PM-429A 1(2)PM-430A 1(2)PM-431A 1(2)PM-449A	0.1000 – 0.5000 Vdc (span = 0.40 Vdc)	10 – 50 mAdc (span = 40 mAdc)	P.11, P.12
Indicators 1(2)PI-429 1(2)PI-430 1(2)PI-431 1(2)PI-449A	10.00 – 50.00 mAdc (span = 40 mAdc)	1700 – 2500 psig (span = 800 psi)	P.11, P.12

* The transmitters are calibrated from 9.47 mAdc to 49.47 mAdc (Ref. P.13 and P.14) to account for head corrections.

6.10 Insulation Resistance Effect Consideration

Per Reference G.37, the PZR pressure transmitter cables are code S6 cables. Reference G.57 states that S6 cables have a PVC jacket rated for 105 °C (approximately 220 °F). Insulation resistance effects result from the degradation of cable insulation, which should not occur at temperatures below the rated jacket temperature. Therefore, insulation resistance effects are only applicable at containment temperatures exceeding 220 °F.

It should be noted that the insulation resistance effect calculated in Section 8.1.51 is very conservative, and is used solely due to the lack of more appropriate test data. The test report cited in Section 8.1.51 provides an insulation resistance value at LOCA conditions, where the cables are submitted to a temperature of 315°F and high humidity and radiation. Per Table 6.4-2, the containment accident conditions considered in this calculation are a maximum temperature of 286°F and normal humidity and radiation. Therefore, it is deemed unlikely that insulation resistance would reach the extreme values determined in Section 8.1.51, and the use of these values is considered to be a very conservative approach.

7.0 METHODOLOGY

7.1 Uncertainty Determination

The uncertainties and loop errors are calculated in accordance with Point Beach Nuclear Plant's Instrument Setpoint Methodology, DG-I01 (Ref. G.1). This methodology uses the square root of the sum of the squares (SRSS) method to combine random and independent errors, and algebraic addition of non-random or bias errors. Clarifications to this methodology are noted below:

A) Treatment of 95/95 and 75/75 Values

To convert 95/95 uncertainty values to 75/75 uncertainty values; this calculation uses the conversion factor specified in Section 3.3.3.13 of Reference G.1. All individual instrument uncertainties are evaluated and shown as 95/95 values, and are combined under the Total Loop Error radical as such. Conversion to a 75/75 value is performed after the 95/95 TLE radical is computed.

B) Treatment of Significant Digits and Rounding

This uncertainty calculation will adhere to the rules given below for the treatment of numerical results.

1. For values less than 10^2, the rounding of discrete calculated instrument uncertainties (e.g. reference accuracy, temperature effect, etc.) should be performed such that the numerical value is restricted to three (3) or less digits shown to the right of the decimal point.

   For example, an uncertainty calculated as 0.6847661 should be listed (and carried through the remainder of the calculation) as 0.685.

   An uncertainty calculated as 53.235487 should be listed (and carried through the remainder of the calculation) as 53.235.

2. For values less than 10^3, but greater than or equal to 10^2, the rounding of discrete calculated instrument uncertainties (e.g. reference accuracy, temperature effect, etc.) should be performed such that the numerical value is restricted to two (2) or less digits shown to the right of the decimal point.

   For example, an uncertainty calculated as 131.6539 should be listed (and carried through the remainder of the calculation) as 131.65.

3. For values greater than or equal to 10^3, the rounding of discrete calculated instrument uncertainties (e.g. reference accuracy, temperature effect, etc.) should be performed such that the numerical value is restricted to one (1) or less digits shown to the right of the decimal point.

   For example, an uncertainty calculated as 2251.4533 should be listed (and carried through the remainder of the calculation) as 2251.5.

4. For Total Loop Uncertainties and Channel Check Tolerances, the calculated result should be rounded to the numerical precision that is readable on the associated loop indication or recorder. If the loop of interest does not have an indicator or recorder, the Total Loop Error should be rounded to the numerical precision currently used in the associated calibration procedure for the end device in that loop (e.g. trip unit or alarm unit).

5. For calibration tolerances, the calculated result should be rounded to the numerical precision currently used in the associated calibration procedure.

These rules are intended to preserve a value's accuracy, while minimizing the retention of insignificant or meaningless digits. In all cases, the calculation preparer shall exercise judgment when rounding and carrying numerical values, to ensure that the values are kept practical with respect to the application of interest.

C) Determination of Channel Check Tolerance (CCT)

Per Section 3.3.8.7 of Reference G.1, the CCT value is considered a 75/75 value. However, converting the CCT from 95/95 into a 75/75 value restricts the tolerance allowed for the indication loop devices and essentially makes it more difficult for the plant to meet their requirements. This approach is considered to be overly conservative. Therefore, this calculation will determine CCT as a 95/95 value.

Although Reference G.1 does not discuss the rounding techniques for CCT values, it is typical for tolerance values to be rounded down. This approach tightens the tolerance band, thus creating a conservative tolerance value. However, in the case of CCT, when a channel is determined non-operational, it is most likely to be found grossly out of tolerance, i.e., the difference between the channel readings far surpasses the allowable CCT value. Therefore, in an effort to reduce the occurrence of false out of tolerance CCT readings, this calculation will round the CCT value up to the precision that is readable on the indication device.

D) Seismic Consideration

Seismic uncertainty must be evaluated as a contributor to overall loop error for some (not all) RPS/ESFAS trip setpoints. The specific setpoints that require evaluation for seismic effects are those that are credited as primary trips for accidents/transients that could credibly occur as the result of a seismic event. These setpoints are found in the Seismic Evaluation Report, USNRC Generic Letter 87-02, USI A-46 Resolution (Ref. G.21) and are listed below.

Table 7.1-1 Credible Accidents/Transients During or Following a SSE

FSAR Section	Accident/Transient	Primary Reactor Trip Variable
14.1.3	Rod Cluster Control Assembly (RCCA) Drop	Low Pressurizer Pressure
14.1.6	Reduction in Feedwater Enthalpy	None Required
14.1.7	Excessive Load Increase	None Required
14.1.8	Loss of Reactor Coolant Flow	Low RCS flow
14.1.9	Loss of External Electrical Load	Over Temp – Delta T High Pressurizer Pressure Low-Low S/G Level
14.1.10	Loss of Normal Feedwater	Low-Low S/G Level
14.1.11	Loss of All AC Power to the Auxiliaries	Low-Low S/G Level
14.2.5	Stuck Open Steam Dump or S/G Safety Valve	None Required

Trip setpoints not shown in the above table do not need to include a seismic uncertainty term because their trip function is not required during or following a seismic event.

Seismic versus Harsh Environment

Seismic events do not create a harsh environment. Therefore, seismic uncertainties and harsh environment uncertainties need not be combined in a single calculation of total loop error. If any of the above trips credited during a seismic event are also credited as primary trips during a LOCA/MSLB that creates a harsh environment, then the uncertainty term (seismic or harsh environment) that results in the worst-case (largest) of the two TLEs should be applied for determining the limiting trip setpoint.

7.1.1 Sources of Uncertainty

Per Ref. G.1, the device uncertainties to be considered for normal and adverse environmental conditions include the following:

Sensor Accuracy	(Sa)
Sensor Drift	(Sd)
Sensor M&TE	(Sm)
Sensor Setting Tolerance	(Sv)
Sensor Power Supply Effect	(Sp)
Sensor Temperature Effect	(St_n and St_a)
Sensor Humidity Effect	(Sh)
Sensor Radiation Effect	(Sr)
Sensor Seismic Effect	(Ss_n, Ss_{a1} and Ss_{a2})
Sensor Static Pressure Effect	(Sspe)
Sensor Overpressure Effect	(Sope)
Bistable Accuracy	(Ba)
Bistable Drift	(Bd)
Bistable M&TE	(Bm)
Bistable Setting Tolerance	(Bv)
Bistable Power Supply Effect	(Bp)
Bistable Temperature Effect	(Bt)
Bistable Humidity Effect	(Bh)
Bistable Radiation Effect	(Br)
Bistable Seismic Effect	(Bs)
Lead/Lag Module Accuracy	(LLa)
Lead/Lag Module Drift	(LLd)
Lead/Lag Module M&TE	(LLm)
Lead/Lag Module Setting Tolerance	(LLv)
Lead/Lag Module Power Supply Effect	(LLp)
Lead/Lag Module Temperature Effect	(LLt)
Lead/Lag Module Humidity Effect	(LLh)
Lead/Lag Module Radiation Effect	(LLr)
Lead/Lag Module Seismic Effect	(LLs)
Current-to-Current Converter Accuracy	(I/Ia)
Current-to-Current Converter Drift	(I/Id)

Current-to-Current Converter M&TE	(I/Im)
Current-to-Current Converter Setting Tolerance	(I/Iv)
Current-to-Current Converter Power Supply Effect	(I/Ip)
Current-to-Current Converter Temperature Effect	(I/It)
Current-to-Current Converter Humidity Effect	(I/Ih)
Current-to-Current Converter Radiation Effect	(I/Ir)
Current-to-Current Converter Seismic Effect	(I/Is)
Indicator Accuracy	(Ia)
Indicator Drift	(Id)
Indicator M&TE	(Im)
Indicator Setting Tolerance	(Iv)
Indicator Power Supply Effect	(Ip)
Indicator Temperature Effect	(It)
Indicator Humidity Effect	(Ih)
Indicator Radiation Effect	(Ir)
Indicator Seismic Effect	(Is)
Indicator Readability Effect	(Irea)
Process Error	(PE_n and PE_a)
Ambient Pressure Effect	(PA_n and PA_a)
Insulation Resistance Effect	(IR)

The uncertainties will be generally calculated in percent of span and converted to the pressure units as required.

Per Section 3.3.3.13 of Ref. G.1, the uncertainties listed above are considered 2 sigma (95% probability/95% confidence) unless otherwise specified.

Per Sections 3.1 and 3.2 of Reference G.1, the PZR Pressure functions are classified into the following categories:

- The High and Low PZR Pressure Trip Setpoints, which provide inputs to RPS and ESFAS, are classified as a Category A function. Therefore, the total loop error should be expressed as 95/95 (95% probability at a 95% confidence level) value.
- The Control Room indication loop, which is a Regulatory Guide 1.97 type B, C, D variable and used for Tech Spec compliance monitoring, is classified as a Category B function. Therefore, the total loop error should be expressed as a 75/75 value.

7.1.2 Total Loop Error Equation Summary

The Total Loop Error for instrument loops is determined in accordance with the requirements of Reference G.1. This methodology uses the square root of the sum of the squares (SRSS) method to combine the applicable random and independent errors, and algebraic addition of non-random or bias errors (of like sign).

Per Section 3.3.1 of Reference G.1, bias errors may be offsetting where it can be proven that the conditions causing the errors will always occur at the same time and at the same magnitude. Per Section 6.6, this is the case with insulation

resistance and ambient pressure biases discussed in Sections 8.1.50 and 8.1.51, respectively. Furthermore, Section 6.10 describes that the insulation resistance calculation uses an overly conservative approach. As such, it is deemed appropriate that these biases are offset when calculating total loop errors.

The equations have been modified accordingly to only include uncertainties applicable to the instrumentation loops treated in this calculation.

7.1.2.1 Total High PZR Pressure Reactor Trip Error ($TLE_{H\text{-}RPS}$)

Per Figure 6.2-1, the total loop error for the High PZR Pressure Reactor Trip consists of uncertainties for the pressure transmitter and bistable. Per Section 6.4, the loop uncertainty is evaluated under normal environmental conditions. Since High PZR Pressure is a trip variable included in Table 7.1-1, the seismic effect must be considered.

$$TLE_{H\text{-}RPS} = \pm\sqrt{\begin{array}{l} Sa^2 + Ba^2 + Sd^2 + Bd^2 + Sm^2 + Bm^2 \\ + Sv^2 + Bv^2 + Sp^2 + Bp^2 + St_n{}^2 + Bt^2 \\ + Sh^2 + Bh^2 + Sr^2 + Br^2 \\ + Ss_{al}{}^2 + Bs^2 + Sspe^2 + Sope^2 + PA_n{}^2 \end{array}} + \text{Biases} \qquad \text{(Eq 7.1.2-1)}$$

7.1.2.2 Total Low PZR Pressure Reactor Trip – Dropped Rod Error ($TLE_{L\text{-}RPS\text{-}ROD}$)

Per Figures 6.2-1 and 6.2-2, the total loop error for the Low PZR Pressure Reactor Trip – Dropped Rod consists of uncertainties for the pressure transmitter, Lead/Lag module and bistable. Per Section 6.4, the loop uncertainty is evaluated under normal environmental conditions.

$$TLE_{L\text{-}RPS\text{-}ROD} = \pm\sqrt{\begin{array}{l} Sa^2 + LLa^2 + Ba^2 + Sd^2 + LLd^2 + Bd^2 \\ + Sm^2 + LLm^2 + Bm^2 + Sv^2 + LLv^2 + Bv^2 \\ + Sp^2 + LLp^2 + Bp^2 + St_n{}^2 + LLt^2 + Bt^2 \\ + Sh^2 + LLh^2 + Bh^2 + Sr^2 + LLr^2 + Br^2 \\ + Ss_{al}{}^2 + LLs^2 + Bs^2 + Sspe^2 + Sope^2 + PA_n{}^2 \end{array}} + \text{Biases}$$

(Eq 7.1.2-2)

7.1.2.3 Total Low PZR Pressure Reactor Trip – SBLOCA Error ($TLE_{L\text{-}RPS\text{-}LOCA}$)

Per Figures 6.2-1 and 6.2-2, the total loop error for the Low PZR Pressure Reactor Trip – SBLOCA consists of uncertainties for the pressure transmitter, Lead/Lag module and bistable. Per Section 6.4, the loop uncertainty is evaluated under accident environmental conditions.

$$TLE_{L\text{-}RPS\text{-}LOCA} = \pm\sqrt{\begin{array}{l} Sa^2 + LLa^2 + Ba^2 + Sd^2 + LLd^2 + Bd^2 \\ + Sm^2 + LLm^2 + Bm^2 + Sv^2 + LLv^2 + Bv^2 \\ + Sp^2 + LLp^2 + Bp^2 + St_a{}^2 + LLt^2 + Bt^2 \\ + Sh^2 + LLh^2 + Bh^2 + Sr^2 + LLr^2 + Br^2 \\ + Ss_{a2}{}^2 + LLs^2 + Bs^2 + Sspe^2 + Sope^2 \end{array}} + \text{Biases}$$

(Eq 7.1.2-3)

7.1.2.4 Total Low PZR Pressure SI Actuation ($TLE_{L\text{-}SI}$)

Per Figure 6.2-1, the total loop error for the Low PZR Pressure SI Actuation consists of uncertainties of the pressure transmitter and bistable. Per Section 6.4, the loop uncertainty is evaluated under accident environmental conditions.

$$TLE_{L\text{-}SI} = \pm\sqrt{\begin{array}{l} Sa^2 + Ba^2 + Sd^2 + Bd^2 + Sm^2 + Bm^2 \\ + Sv^2 + Bv^2 + Sp^2 + Bp^2 + St_a{}^2 + Bt^2 \\ + Sh^2 + Bh^2 + Sr^2 + Br^2 \\ + Ss_{a2}{}^2 + Bs^2 + Sspe^2 + Sope^2 \end{array}} + \text{Biases} \qquad \text{(Eq 7.1.2-4)}$$

7.1.2.5 Total Normal Indicator Loop Error ($TLE_{N\text{-}IND}$)

Per Figures 6.2-1 and 6.2-2, the total error for the PZR Pressure Indication consists of pressure transmitter, Current-to-Current Converter and indicator at normal operating conditions (see Section 6.4).

$$TLE_{N\text{-}IND} = \pm\sqrt{\begin{array}{l} Sa^2 + I/Ia^2 + Ia^2 + Sd^2 + I/Id^2 + Id^2 \\ + Sm^2 + I/Im^2 + Im^2 + Sv^2 + I/Iv^2 + Iv^2 \\ + Sp^2 + I/Ip^2 + Ip^2 + St_n{}^2 + I/It^2 + It^2 \\ + Sh^2 + I/Ih^2 + Ih^2 + Sr^2 + I/Ir^2 + Ir^2 \\ + Ss_n{}^2 + I/Is^2 + Is^2 + Sspe^2 + Sope^2 + Irea^2 + PA_n{}^2 \end{array}} + \text{Biases}$$

(Eq. 7.1.2-5)

7.1.3 As-Found Tolerance Equation Summary

As-Found Tolerances are calculated independently for each of the loop components. The equations shown are adapted from Section 3.3.8.6 of Reference G.1 for use in this calculation.

7.1.3.1 Sensor As-Found Tolerance (SAF)

The acceptable As-Found Tolerance for the Sensor is calculated by the following equation:

$$SAF = \pm \sqrt{Sv^2 + Sd^2 + Sm^2} \qquad \text{(Eq. 7.1.3-1)}$$

where:

Sv = Sensor Tolerance
Sd = Sensor Drift
Sm = Sensor M&TE error

7.1.3.2 Bistable As-Found Tolerance (BAF)

The acceptable As-Found Tolerance for the Bistable is calculated by the following equation:

$$BAF = \pm \sqrt{Bv^2 + Bd^2 + Bm^2} \qquad \text{(Eq. 7.1.3-2)}$$

where:

Bv = Bistable Tolerance
Bd = Bistable Drift
Bm = Bistable M&TE error

7.1.3.3 Current-to-Current Converter As-Found Tolerance (I/IAF)

The acceptable As-Found Tolerance for the I/I Converter is calculated by the following equation:

$$I/IAF = \pm \sqrt{I/Iv^2 + I/Id^2 + I/Im^2} \qquad \text{(Eq. 7.1.3-3)}$$

where:

I/Iv = I/I Converter Setting Tolerance
I/Id = I/I Converter Drift
I/Im = I/I Converter M&TE error

7.1.3.4 Lead/Lag Module As-Found Tolerance (LLAF)

The acceptable As-Found Tolerance for the Lead/Lag Module is calculated by the following equation:

$$LLAF = \pm \sqrt{LLv^2 + LLd^2 + LLm^2} \qquad \text{(Eq. 7.1.3-4)}$$

where:

LLv = Lead/Lag Module Setting Tolerance
LLd = Lead/Lag Module Drift
LLm = Lead/Lag Module M&TE error

7.1.3.5 Indicator As-Found Tolerance (IAF)

The acceptable As-Found Tolerance for the indicator is calculated by the following equation:

$$IAF = \pm \sqrt{Iv^2 + Id^2 + Im^2} \qquad \text{(Eq. 7.1.3-5)}$$

where:

Iv = Indicator Setting Tolerance
Id = Indicator Drift
Im = Indicator M&TE error

7.1.4 As-Left Tolerance Equation Summary

As-Left Tolerances are calculated independently for each of the loop components. The equations shown are adapted from Section 3.3.8.6 of Reference G.1 for use in this calculation.

7.1.4.1 Sensor As-Left Tolerance (SAL)

The As-Left Tolerance for the Sensor is equal to the setting tolerance:

$$SAL = \pm Sv \qquad \text{(Eq. 7.1.4-1)}$$

Where:

Sv = Sensor Setting Tolerance

7.1.4.2 Bistable As-Left Tolerance (BAL)

The As-Left Tolerance for the Bistable is equal to the setting tolerance:

$$BAL = \pm Bv \qquad \text{(Eq. 7.1.4-2)}$$

Where:

Bv = Bistable Setting Tolerance

7.1.4.3 Current-to-Current Converter As-Left Tolerance (I/IAL)

The As-Left Tolerance for the I/I Converter is equal to its setting tolerance:

$$I/IAL = \pm I/Iv \qquad \text{(Eq. 7.1.4-3)}$$

Where:

I/Iv = I/I Converter Setting Tolerance

7.1.4.4 Lead/Lag Module As-Left Tolerance (LLAL)

The As-Left Tolerance for the Lead/Lag Module is equal to its setting tolerance:

$$LLAL = \pm LLv \qquad \text{(Eq. 7.1.4-4)}$$

Where:

LLv = Lead/Lag Module Setting Tolerance

7.1.4.5 Indicator As-Left Tolerance (IAL)

The As-Left Tolerance for the Indicator is equal to its setting tolerance:

$$IAL = \pm Iv \qquad \text{(Eq. 7.1.4-5)}$$

Where:

Iv = Indicator Setting Tolerance

7.1.5 Limiting Trip Setpoint (LTSP) Equation Summary

Per Section 3.3.8.4 of Reference G.1, when a setpoint is approached from one direction and the uncertainties are normally distributed, a reduction factor of 1.645/1.96 = 0.839 may be applied to a 95/95 (95% probability at a 95% confidence level) TLE. The reduction factor should only be applied to the random portion of the TLE that has been statistically derived using the SRSS method. Therefore, this calculation expands upon the methodology of DG-I01 (Reference G.1), and separates the TLE into random and bias terms in order to apply the reduction factor solely to the random portion of the TLE.

For a process increasing toward the analytical limit, the calculated Limiting Trip Setpoint is as follows:

$$LTSP\uparrow = AL + [(0.839)^* TLE_{rdm}^- + TLE_{bias}^-]PS \qquad \text{(Eq. 7.1.5-1)}$$

For a process decreasing from normal operation toward the analytical limit, the calculated Limiting Trip Setpoint is determined as follows:

$$LTSP\downarrow = AL + [(0.839)^* TLE_{rdm}^+ + TLE_{bias}^+]PS \qquad \text{(Eq. 7.1.5-2)}$$

Per Section 3.3.8.4 of Reference G.1, when a setpoint is not approached from one direction or is approached from both directions, the setpoint is determined by subtracting (or adding for a decreasing setpoint) the total loop error from the analytical limit. Per Section 3.4 of Reference G.1, for a process without an Analytical Limit (AL), a limiting value established by system design requirements is considered a Process Limit (PL) and is used for the setpoint determination. The calculated setpoint (SP) is as follows:

Increasing Setpoints $\quad SP\uparrow = PL + (TLE^- * PS) \qquad$ (Eq. 7.1.5-3)

Decreasing Setpoints $\quad SP\downarrow = PL + (TLE^+ * PS) \qquad$ (Eq. 7.1.5-4)

7.1.6 Operability Limit (OL) Equation Summary

Per Section 3.3.8.2 of Reference G.58, the Operability Limit (OL) is defined as a calculated limiting value that the As-Found bistable setpoint is allowed to have during a Technical Specification surveillance Channel Operational Test (COT), beyond which the instrument channel is considered inoperable and corrective action must be taken. Two OLs are calculated, one on each side of the FTSP as-left tolerance band, incorporating a calculated 3-sigma (3σ) drift value. A channel found drifting beyond its 3σ drift value is considered to be operating abnormally (i.e., is inoperable).

Per Section 3.3.8.4 of Reference G.58, the OL on each side of the FTSP is calculated as follows:

$$OL^{+} = FTSP + [RAL^{2} + Rd_{3\sigma}^{2}]^{1/2} \qquad \text{(Eq. 7.1.6-1)}$$

$$OL^{-} = FTSP - [RAL^{2} + Rd_{3\sigma}^{2}]^{1/2} \qquad \text{(Eq. 7.1.6-2)}$$

Where:

the FTSP is expressed in percent of span
OL^{+} is the Operability Limit above the FTSP
OL^{-} is the Operability Limit below the FTSP
RAL is the rack as-left tolerance (typically the bistable tolerance)
$Rd_{3\sigma}$ is the 3σ rack drift value determined as follows:

$$Rd_{3\sigma} = (1.5)\, Rd_{2\sigma} \qquad \text{(Eq. 7.1.6-3)}$$

The rack drift value ($Rd_{2\sigma}$) is the 2-sigma drift value for components checked during the COT, typically the bistable drift.

7.1.7 Channel Check Tolerance (CCT) Equation Summary

Per Reference G.1, the channel check tolerance (CCT) represents the maximum expected deviation between channel indications that monitor the same plant process parameter. The CCT is determined for instrument loops that require a qualitative assessment of channel behavior during operation. This assessment involves an observed comparison of the channel indication/status.

As stated in Section 3.3.8.7 of Reference G.1, the CCT is determined by combining the reference accuracy (a), setting tolerance (v), drift (d), and readability (rea) of each device, including the sensor, in the indication loop. A channel check involves a comparison of two indications independent of the number of redundant loops. The channel check tolerance is the combination of these uncertainties (in % span) using the SRSS method shown below:

$$CCT = \pm\sqrt{\begin{aligned}&(Sa^{2} + I/Ia^{2} + Ia^{2} + Sd^{2} + I/Id^{2} + Id^{2} + Sv^{2} + I/Iv^{2} \\ &+ Iv^{2} + Irea^{2})_{ind\,a} + (Sa^{2} + I/Ia^{2} + Ia^{2} + Sd^{2} + I/Id^{2} + Id^{2} \\ &+ Sv^{2} + I/Iv^{2} + Iv^{2} + Irea^{2})_{ind\,b}\end{aligned}} \qquad \text{(Eq. 7.1.7-1)}$$

7.1.8 Scaling

Per Reference G.45, for an instrument with a linear input and output relationship, the output signal can be determined as follows:

$$y - y_1 = m * (x - x_1) \quad \text{(Eq. 7.1.8-1)}$$

$$m = (y_2 - y_1) / (x_2 - x_1) \quad \text{(Eq. 7.1.8-2)}$$

$$y = m * (x - x_1) + y_1 \quad \text{(Eq. 7.1.8-3)}$$

Where:

x = Process value variable, a known input (psig)
x_1 = Process value variable, at 0 % span (psig)
x_2 = Process value variable, at 100 % span (psig)
y = Analog value variable, an unknown output (mAdc)
y_1 = Analog value at 0 % span (mAdc)
y_2 = Analog value at 100 % span (mAdc)
m = Slope, or gain of the function, scale factor

7.2 Drift Considerations

The drift values established in References C.3, C.5, C.7 and C.8 will be utilized for the transmitters, bistables, Lead/Lag modules and indicators.

Use of the aforementioned drift value (as design input to this calculation) is based on justification provided by Engineering Evaluation 2005-0006 (Ref. C.9). This evaluation reviews the station's M&TE and M&TE control programs, based on requirements imposed by the methodology used to prepare instrument setpoint and uncertainty calculations for the station (Ref. G.1). The evaluation concludes that the station's M&TE and M&TE control programs have remained equivalent or improved since the drift calculations were initially prepared, and therefore, renders the drift calculations acceptable for use in current (present-day) calculation revisions performed for the station.

7.3 Multiple Analytical Limits Considerations

In the case where multiple Analytical Limits have been identified pertaining to one setpoint, the Limiting Trip Setpoint associated with each Analytical Limit will have to be calculated. The worst-case Limiting Trip Setpoint will be established and shall be bounded by the selected Field Trip Setpoint.

7.4 Margin-to-Trip Evaluation

A "margin-to-trip" analysis is performed to determine the peak value of a particular process parameter during design basis transient conditions for which the reactor is not expected to trip (Reference G.52). The peak value will be compared to the FTSP, with an allowance for instrument uncertainty under normal environmental conditions, to demonstrate that a reactor trip is not expected during the design basis transient condition of interest. Therefore,

Increasing Setpoint:

Margin-to-Trip = FTSP – (TLE*PS) (Eq. 7.4-1)
Margin-to-Trip > Peak Process Parameter

Decreasing Setpoint:

Margin-to-Trip = FTSP + (TLE*PS) (Eq. 7.4-2)
Margin-to-Trip < Peak Process Parameter

8.0 BODY OF CALCULATION

8.1 Device Uncertainty Analysis

This section will determine all applicable uncertainties for the devices that comprise the PZR Pressure Instrumentation Loops shown in Figures 6.2-1 and 6.2-2.

From Section 3.3.4.3 of Reference G.1, the drift values calculated from As-Found/As-Left instrument calibration data normally include the error effects under normal conditions of drift, accuracy, power supply, plant vibration, calibration temperature, normal radiation, normal humidity, M&TE used for calibration, and instrument readability. If it is determined that the calibration conditions are indicative of the normal operating conditions, the environmental effects need not be included separately. All device uncertainty terms are considered random and independent unless otherwise noted.

Per References P.2 – P.5, P.7 – P.14, all the components in the loops are individually calibrated.

8.1.1 Sensor Accuracy (Sa)

Reference C.3 has determined the historical drift values for the PZR Pressure Transmitters. Per Reference G.1, when drift error values have been statistically derived from As-Found/As-Left calibration data, the Sensor Accuracy of the transmitter is included in the instrument drift value. Therefore,

Sa = ± 0.000 % span

8.1.2 Sensor Drift (Sd)

Reference C.3 has determined the historical drift values for the PZR Pressure Transmitters. Per SR 3.3.2.8 and 3.3.1.11 of Technical Specifications (Ref. G.2) the channel calibration is performed every 22.5 months (18 months plus 25% allowance). Per Reference C.3, Table 8.2, the 95/95 Sensor Drift value (conservatively using the two-year value) is given as ± 0.844 % span with no bias.

Sd = ± 0.844 % span

Bias = ± 0.000 % span

8.1.3 Sensor M&TE (Sm)

Reference C.3 has determined the historical drift values for the PZR Pressure Transmitters. Per Reference G.1, when drift error values have been statistically derived from as-found/As-Left calibration data, the Sensor M&TE effects of the transmitters is included in the instrument drift value. Therefore,

Sm = ± 0.000 % span

8.1.4 Sensor Setting Tolerance (Sv)

Per References P.13, P.14 and Assumption 5.1.2, the sensor setting tolerance is ± 0.20 mAdc, and the calibrated span is 40 mAdc (Section 6.8). Therefore,

Sv = (sensor setting tolerance/calibrated span) * 100%
Sv = (± 0.20 mAdc/40 mAdc) * 100%

Sv = ± 0.500 % span

8.1.5 Sensor Power Supply Effect (Sp)

Reference C.3 has determined the historical drift values for the PZR Pressure Transmitters. Per Reference G.1, when drift error values have been statistically derived from As-Found/As-Left calibration data, the Sensor Power Supply Effect of the transmitters is included in the instrument drift value. Therefore,

Sp = ± 0.000 % span

8.1.6 Sensor Temperature Effect (St_n and St_a)

From Table 6.3-1, the PZR Pressure Transmitters are Foxboro Model N-E11GM-HIE1-BEL with an upper span limit of 2000 psig (Ref. V.6). The calibrated span is 800 psi (Section 6.8), which is 40% of the upper span limit.

The Temperature Effect specified in Reference V.6 consists of:

- a zero shift span error of ± 2.5 % per 100 °F for a calibrated span between 20% and 50% of max span (or upper span limit), and
- a span error of ± 1.25 % per 100 °F.

These errors are combined using the SRSS method per Reference G.1.

From Section 6.4.1, the transmitters are located in the Containment Building where the normal ambient temperature range is 65 to 120 °F.

Zero Shift error (St_{ZERO}) at normal conditions (65 to 120 °F)

St_{ZERO} = ± (2.5 % span/100 °F) * (120 – 65 °F)
St_{ZERO} = ± 1.375 % span

Span error (St_{SPAN}) at normal conditions (65 to 120 °F)

St_{SPAN} = ± (1.25 % span/100 °F) * (120 – 65 °F)
St_{SPAN} = ± 0.688 % span

Sensor Temperature Effect at normal conditions (65 to 120 °F) (St_n)

$St_n = \pm [(St_{ZERO})^2 + (St_{SPAN})^2]^{1/2}$
$St_n = \pm [(1.375\ \%\ span)^2 + (0.688\ \%\ span)^2]^{1/2}$

St_n = ± 1.538 % span

Per Section 6.4.1, the transmitter accident temperature range is 65 to 180 °F.

Zero Shift error (St_{ZERO}) at accident conditions (65 to 180 °F)

St_{ZERO} = ± (2.5 % span/100 °F) * (180 – 65 °F)
St_{ZERO} = ± 2.875 % span

Span error (St_{SPAN}) at accident conditions (65 to 180 °F)

St_{SPAN} = ± (1.25 % span/100 °F) * (180 – 65 °F)
St_{SPAN} = ± 1.438 % span

Sensor Temperature Effect at accident conditions (65 to 180 °F) (St_a)

$St_a = \pm [(St_{ZERO})^2 + (St_{SPAN})^2]^{1/2}$
$St_a = \pm [(2.875\ \%\ span)^2 + (1.438\ \%\ span)^2]^{1/2}$

St_a = ± 3.215 % span

8.1.7 Sensor Humidity Effect (Sh)

Per Section 3.3.3.20 of Reference G.1, changes in ambient humidity have a negligible effect on the uncertainty of the instruments used in this calculation. Therefore,

Sh = ± 0.000 % span

8.1.8 Sensor Radiation Effect (Sr)

Reference C.3 has determined the historical drift values for the PZR Pressure Transmitters. Per Reference G.1, when drift error values have been statistically derived from As-Found/As-Left calibration data, the normal Sensor Radiation Effect of the transmitters is included in the instrument drift value.

Sr = ± 0.000 % span

8.1.9 Sensor Seismic Effect (Ss_n and Ss_a)

Reference C.3 has determined the historical drift values for the PZR Pressure Transmitters. Per Reference G.1, when drift error values have been statistically derived from As-Found/As-Left calibration data, the effect of normal vibration is included in the instrument drift value. Therefore,

Ss_n = ± 0.000 % span

The PZR Pressure Reactor Trip is a variable included in Table 7.1-1, and therefore, seismic effect must be evaluated. Reference C.11 states that the PZR Pressure Transmitters are qualified transmitters and the seismic effect during and after a seismic event is ± 1 % span. Since the High PZR Pressure Reactor Trip mitigates the loss of load event (see Section 6.7.2), the seismic effect must be included, per Table 7.1-1. Per Table 7.1-1 the seismic effect must also be included for the Low PZR Pressure Reactor Trip ('dropped rod' case only). Therefore,

Ss_{a1} = ± 1.000 % span

Per Table 7.1-1, Low PZR Pressure Reactor Trip Setpoint (SBLOCA case only) and SI actuation do not require the evaluation of a seismic uncertainty term. Therefore,

Ss_{a2} = ± 0.000 % span

8.1.10 Sensor Static Pressure Effect (Sspe)

Per Reference G.1, Section 3.3.4.11, static pressure effects due to change in process pressure only apply to differential pressure instruments in direct contact with process. Therefore,

Sspe = ± 0.000 % span

8.1.11 Sensor Overpressure Effect (Sope)

The PZR Pressure Transmitters are rated for a maximum overrange pressure of 3000 psig (Ref. V.6), which is well above the maximum PZR operating pressure of 2250 psia (Ref. G.22). Therefore, the sensor overpressure effect is considered negligible.

Sope = ± 0.000 % span

8.1.12 Bistable Accuracy (Ba)

References C.5 and C.7 have determined the historical drift values for Foxboro Model 63U-AC and 63U-BC bistables. Per Reference G.1, when drift error values have been statistically derived from As-Found/As-Left calibration data, the Accuracy of the bistable is included in the instrument drift value. Therefore,

Ba = ± 0.000 % span

8.1.13 Bistable Drift (Bd)

From References P.2 – P.5 and P.7 – P.10, the bistables are separately calibrated every 92 days or quarterly. References C.5, Table 8.1 and C.7, Table 8.2 have determined the historical drift values for Foxboro Model 63U-AC and 63U-BC bistables, respectively and the quarterly 95/95 Bistable Drift values (no bias) are:

Bd_{AC} = ± 0.222 % span
Bd_{BC} = ± 0.212 % span

The drift value for Foxboro Model 63U-AC is used as the bounding drift value for both types of bistables. Therefore,

Bd = ± 0.222% span

Bias = ± 0.000 % span

8.1.14 Bistable M&TE Effect (Bm)

References C.5 and C.7 have determined the historical drift values for Foxboro Model 63U-AC and 63U-BC bistables. Per Reference G.1, when drift error values have been statistically derived from As-Found/As-Left calibration data, the M&TE Effect of the bistables is included in the instrument drift value. Therefore,

Bm = ± 0.000 % span

8.1.15 Bistable Setting Tolerance (Bv)

From References P.2 – P.5 and P.7 – P.10, the current bistable setting tolerances are one-sided around the FTSP, as follows:

1(2)PC-429A	+0.0/- 0.002 Vdc	(High Pressure Trip)
1(2)PC-430A	+0.0/- 0.002 Vdc	(High Pressure Trip)
1(2)PC-431A	+0.0/- 0.002 Vdc	(High Pressure Trip)
1(2)PC-429D	+0.0/- 0.002 Vdc	(SI Unblock)
1(2)PC-430F	+0.0/- 0.002 Vdc	(SI Unblock)
1(2)PC-431I	+0.0/- 0.002 Vdc	(SI Unblock)
1(2)PC-429E	+0.002/- 0.0 Vdc	(Low Pressure Trip)
1(2)PC-430H	+0.002/- 0.0 Vdc	(Low Pressure Trip)
1(2)PC-431J	+0.002/- 0.0 Vdc	(Low Pressure Trip)
1(2)PC-429C	+0.002/- 0.0 Vdc	(SI)
1(2)PC-430E	+0.002/- 0.0 Vdc	(SI)
1(2)PC-431G	+0.002/- 0.0 Vdc	(SI)
1(2)PC-449A	+0.002/- 0.0 Vdc	(Low Pressure Trip)

However, per Assumption 5.1.2, these values are to be converted to symmetrical as-left tolerances of ±0.002 Vdc. Per Section 6.8, the calibrated span is 0.4 Vdc. Therefore,

Bv = (bistable setting tolerance/calibrated span) * 100%
Bv = (± 0.002 Vdc/0.4 Vdc) * 100%

Bv = ± 0.500 % span

8.1.16 Bistable Power Supply Effect (Bp)

References C.5 and C.7 have determined the historical drift values for Foxboro Model 63U-AC and 63U-BC bistables. Per Reference G.1, when drift error values have been statistically derived from As-Found/As-Left calibration data, the Power Supply Effect of the bistables is included in the instrument drift value. Therefore,

Bp = ±0.000 % span

8.1.17 Bistable Temperature Effect (Bt)

As stated in Section 6.4.2, the bistables are located in the Control Room, which has an ambient temperature between 65 °F to 120 °F (for trip actuation). From vendor information (Ref. V.1 and V.2), the bistable has an operating range of +40°F to +120°F with no associated temperature effect. Therefore,

Bt = ± 0.000 % span

8.1.18 Bistable Humidity Effect (Bh)

Per Section 3.3.3.20 of Reference G.1, changes in ambient humidity have a negligible effect on the uncertainty of the instruments used in this calculation. Therefore,

Bh = ± 0.000 % span

8.1.19 Bistable Radiation Effect (Br)

Per Section 6.4.2, the bistables are located in the Control Room, which has a mild radiological environment during normal and accident conditions. References C.5 and C.7 have determined the historical drift values for Foxboro Model 63U-AC and 63U-BC bistables. Per Reference G.1, when drift error values have been statistically derived from As-Found/As-Left calibration data, the Radiation Effect of the bistables is included in the instrument drift value. Therefore,

Br = ± 0.000 % span

8.1.20 Bistable Seismic Effect (Bs)

There is no seismic effect provided by the vendor for the bistables (Ref. V.1 and V.2). Per Section 3.3.4.10 of Reference G.1, the effects of seismic or vibration events for non-mechanical instrumentation are considered zero unless vendor or industry experience indicates otherwise. Therefore,

Bs = ± 0.000 % span

8.1.21 Lead/Lag Module Accuracy (LLa)

Per References G.23 through G.30, the accuracy of the Lead/Lag modules is ± 0.2 mAdc. Section 6.8 indicates that the output span of the module is 40 mAdc. Therefore,

LLa = (module accuracy/calibrated span) * 100%
LLa = (± 0.2 mAdc/40 mAdc) * 100% span

LLa = ± 0.500 % span

8.1.22 Lead/Lag Module Drift (LLd)

Reference V.5 does not provide drift specification for the Lead/Lag module. Per Section 3.3.3.15 of Reference G.1, when drift is not specified by the vendor, the accuracy of the component is used as the drift for the entire calibration period. Therefore

LLd = ± 0.500 % span

8.1.23 Lead/Lag Module M&TE Effect (LLm)

Per References P.11 and P.12, the PZR Pressure Lead/Lag modules are calibrated using a multimeter appropriate for 0.1-0.5 Vdc at the module input and output (due to a 10-Ω resistor connected across the calibration point per Ref. D.6 – D.13). The M&TE effect is due to the multimeter used at the module input and output. According to calibration procedure ICI-12 (Ref. P.15), the following M&TE are capable of performing this measurement.

<u>For the HP 34401A multimeter (6.5 digit display, 1.0 Vdc range) (Ref. V.9):</u>

RA_{mte} = ± (0.0040 % reading + 0.0007 % range)
RA_{mte} = ± [0.0040 % (0.5 Vdc) + 0.0007 % (1.0 Vdc)]
RA_{mte} = ± 0.000027 Vdc

RA_{std} = 0
RD_{mte} = ± 0.000001 Vdc

From Section 3.3.4.4 of Reference G.1, M&TE uncertainty is calculated using the following equation:

$$m = \pm\sqrt{RA^2_{mte} + RA^2_{std} + RD^2_{mte}}$$

$$LLm_{HP} = \pm\sqrt{0.000027^2 + 0^2 + 0.000001^2} = \pm 0.000027 \text{ Vdc}$$

LLm_{HP} = ± 0.000027 Vdc * (100% span / 0.4 Vdc)
LLm_{HP} = ± 0.0068 % span

<u>For the Fluke 45 multimeter (5 digit display, 3.0 Vdc range)</u>

RA_{mte} = ± 0.025% reading
RA_{mte} = ± 0.025% reading * 0.5 Vdc
RA_{mte} = ± 0.000125 Vdc
RA_{std} = 0
RD_{mte} = ± 2 DG * 0.0001 Vdc
RD_{mte} = ± 0.0002 Vdc

From Section 3.3.4.4 of Reference G.1, M&TE uncertainty is calculated using the following equation:

$$m = \pm\sqrt{RA^2_{mte} + RA^2_{std} + RD^2_{mte}}$$

$$LLm_{45} = \pm\sqrt{0.000125^2 + 0^2 + 0.0002^2} = \pm 0.000236 \text{ Vdc}$$

LLm_{45} = uncertainty * (100% span / calibrated span)
LLm_{45} = ± 0.000236 Vdc * (100% span / 0.4 Vdc)
LLm_{45} = ± 0.059 % span

<u>For the Fluke 8842A multimeter (6.5 digit display, 2.0 Vdc range)</u>

RA_{mte} = ± 0.003% reading
RA_{mte} = ± 0.003% reading * 0.5 Vdc
RA_{mte} = ± 0.000015 Vdc
RA_{std} = 0
RD_{mte} = ± 2 DG * 0.00001 Vdc
RD_{mte} = ± 0.00002 Vdc

From Section 3.3.4.4 of Reference G.1, M&TE uncertainty is calculated using the following equation:

$$m = \pm\sqrt{RA^2_{mte} + RA^2_{std} + RD^2_{mte}}$$

$$LLm_{8842} = \pm\sqrt{0.000015^2 + 0^2 + 0.00002^2} = \pm 0.000025 \text{ Vdc}$$

LLm_{8842} = uncertainty * (100% span / calibrated span)
LLm_{8842} = ± 0.000025 Vdc * (100% span / 0.4 Vdc)
LLm_{8842} = ± 0.00625 % span

The worst case and bounding input and output M&TE error is $LLm_{45} = \pm 0.059\%$ span.

The total M&TE uncertainty for the calibration of the Lead/Lag Module is calculated using the multiple M&TE equation given in Section 3.3.4.4 of Reference G.1:

$$m = \pm\sqrt{m_1^2 + m_2^2 + \ldots m_n^2}$$

$$LLm = \pm\sqrt{0.059^2 + 0.059^2}$$

LLm = ± 0.083 % span

8.1.24 Lead/Lag Module Setting Tolerance (LLv)

Per Ref. P.13, P.14 and Assumption 5.1.2, the Lead/Lag Module setting tolerance is ± 0.002 Vdc, and the calibrated span is 0.40 Vdc (Section 6.8). Therefore,

LLv = (module setting tolerance/calibrated span) * 100%
LLv = (± 0.002 Vdc/0.4 Vdc) * 100% span

LLv = ± 0.500 % span

8.1.25 Lead/Lag Module Power Supply Effect (LLp)

The vendor does not provide any power supply effect for the Lead/Lag Module (Ref. V.5). Section 3.3.3.16 of Ref. G.1 states that industry experience with similar devices should be considered in the absence of vendor data. Review of similar devices from the same vendor does not provide power supply effect information. Therefore, the Lead/Lag Module Power Supply Effect is considered negligible.

LLp = ± 0.000 % span

8.1.26 Lead/Lag Module Temperature Effect (LLt)

The vendor has not provided a temperature effect specification for the Lead/Lag Module (Ref. V.5). Per Section 6.4.2, the Lead/lag modules are located in the Control Room, which has an ambient temperature between 65 °F to 120 °F (for trip actuation). From the vendor information in Reference V.5, the Lead/Lag Module is specified to operate in an ambient temperature range of 40 to 120 °F with no associated temperature effect. Therefore,

LLt = ± 0.000 % span

8.1.27 Lead/Lag Module Humidity Effect (LLh)

Per Section 3.3.3.20 of Reference G.1, changes in ambient humidity have a negligible effect on the uncertainty of the instruments used in this calculation. Therefore,

LLh = ± 0.000 % span

8.1.28 Lead/Lag Module Radiation Effect (LLr)

The Lead/Lag modules are located in the Computer Room, which has a mild radiological environment under all plant conditions. Per Section 3.3.3.21 of Reference G.1, radiation errors are considered to be included in the drift error. Therefore,

LLr = ± 0.000 % span

8.1.29 Lead/Lag Module Seismic Effect (LLs)

There is no seismic effect provided by the vendor for the Lead/Lag Module (Ref. V.5). Per Section 3.3.4.10 of Ref. G.1, the effects of seismic or vibration events for non-mechanical instrumentation are considered zero unless vendor or industry experience indicates otherwise. Therefore,

LLs = ± 0.000 % span

8.1.30 Current-to-Current Converter Accuracy (I/Ia)

Per Reference V.3, the accuracy of the I/I Converter is ± 0.5 % span. Therefore,

I/Ia = ± 0.500 % span

8.1.31 Current-to-Current Converter Drift (I/Id)

Reference V.5 does not provide a drift specification for the I/I Converter. Per Section 3.3.3.15 of Reference G.1, when drift is not specified by the vendor, the accuracy of the component is used as the drift for the entire calibration period. Therefore,

I/Id = ± 0.500 % span

8.1.32 Current-to-Current Converter M&TE Effect (I/Im)

Per Ref. P.11 and P.12, the PZR Pressure I/I Converters are calibrated using a multimeter appropriate for 0.1-0.5 Vdc at the input (due to a 10-Ω resistor connected across the calibration point per Ref. D.6 – D.13) and 10-50 mAdc at the output. The M&TE effect is due to the multimeter used at the isolator input and output. According to calibration procedure ICI-12 (Ref. P.15), the following M&TE are capable of performing this measurement.

<u>HP 34401A multimeter (6.5 digit display, 1.0 Vdc range) (Ref. V.9) - Input:</u>

RA_{mte} = ± (0.0040 % reading + 0.0007 % range)
RA_{mte} = ± [0.0040 % (0.5 Vdc) + 0.0007 % (1.0 Vdc)]
RA_{mte} = ± 0.000027 Vdc
RA_{std} = 0
RD_{mte} = ± 0.000001 Vdc

From Section 3.3.4.4 of Reference G.1, M&TE uncertainty is calculated using the following equation:

$$m = \pm\sqrt{RA^2_{mte} + RA^2_{std} + RD^2_{mte}}$$

$I/Im_{HP-1} = \pm\sqrt{0.000027^2 + 0^2 + 0.000001^2} = \pm 0.000027$ Vdc

I/Im_{HP-1} = ± 0.000027 Vdc * (100% span / 0.4 Vdc)
I/Im_{HP-1} = ± 0.0068 % span

Fluke 45 multimeter (5 digit display, 3.0 Vdc range) - Input

RA_{mte} = ± 0.025% reading
RA_{mte} = ± 0.025% reading * 0.5 Vdc
RA_{mte} = ± 0.000125 Vdc
RA_{std} = 0
RD_{mte} = ± 2 DG * 0.0001 Vdc
RD_{mte} = ± 0.0002 Vdc

From Section 3.3.4.4 of Reference G.1, M&TE uncertainty is calculated using the following equation:

$$m = \pm\sqrt{RA^2_{mte} + RA^2_{std} + RD^2_{mte}}$$

$I/Im_{45-1} = \pm\sqrt{0.000125^2 + 0^2 + 0.0002^2} = \pm 0.000236$ Vdc

I/Im_{45-1} = uncertainty * (100% span / calibrated span)
I/Im_{45-1} = ± 0.000236 Vdc * (100% span / 0.4 Vdc)
I/Im_{45-1} = ± 0.059 % span

Fluke 8842A multimeter (6.5 digit display, 2.0 Vdc range) - Input

RA_{mte} = ± 0.003% reading
RA_{mte} = ± 0.003% reading * 0.5 Vdc
RA_{mte} = ± 0.000015 Vdc
RA_{std} = 0
RD_{mte} = ± 2 DG * 0.00001 Vdc
RD_{mte} = ± 0.00002 Vdc

From Section 3.3.4.4 of Reference G.1, M&TE uncertainty is calculated using the following equation:

$$m = \pm\sqrt{RA^2_{mte} + RA^2_{std} + RD^2_{mte}}$$

$I/Im_{8842} = \pm\sqrt{0.000015^2 + 0^2 + 0.00002^2} = \pm 0.000025$ Vdc

I/Im_{8842} = uncertainty * (100% span / calibrated span)
I/Im_{8842} = ± 0.000025 Vdc * (100% span / 0.4 Vdc)
I/Im_{8842} = ± 0.00625 % span

The worst case and bounding input M&TE error is I/Im_{45-1} = ±0.059% span.

Fluke 45 multimeter (5-digit display, 100-mAdc range) - Output

RA_{mte} = ± 0.05% reading
RA_{mte} = ± 0.05% reading * 50 mAdc
RA_{mte} = ± 0.025 mAdc
RA_{std} = 0

RD_{mte} = ± 2 DG * 0.01 mAdc
RD_{mte} = ± 0.02 mAdc

From Section 3.3.4.4 of Reference G.1, M&TE uncertainty is calculated using the following equation:

$$m = \pm\sqrt{RA^2_{mte} + RA^2_{std} + RD^2_{mte}}$$

$$I/I\,m_{45\text{-}2} = \pm\sqrt{0.025^2 + 0^2 + 0.02^2} = \pm 0.0320 \text{ mAdc}$$

$I/Im_{45\text{-}2}$ = ± 0.0320 mAdc * (100% span / 40 mAdc)
$I/Im_{45\text{-}2}$ = ± 0.080 % span

<u>HP 34401A multimeter (6.5 digit display, 100 mAdc range) (Ref. V.9) - Output:</u>

RA_{mte} = ± (0.050 % reading + 0.005 % range)
RA_{mte} = ± [0.050 % (50 mAdc) + 0.005 % (100 mAdc)]
RA_{mte} = ± 0.030 mAdc
RA_{std} = 0
RD_{mte} = ± 0.0001 mAdc

From Section 3.3.4.4 of Reference G.1, M&TE uncertainty is calculated using the following equation:

$$m = \pm\sqrt{RA^2_{mte} + RA^2_{std} + RD^2_{mte}}$$

$$I/Im_{HP\text{-}2} = \pm\sqrt{0.030^2 + 0^2 + 0.0001^2} = \pm 0.030 \text{mAdc}$$

$I/Im_{HP\text{-}2}$ = ± 0.030 mAdc * (100% span / 40 mAdc)
$I/Im_{HP\text{-}2}$ = ± 0.075 % span

The worst case and bounding output M&TE error is $I/Im_{45\text{-}2}$ = ±0.080 % span.

The total M&TE uncertainty for the calibration of the Lead/Lag Module is calculated using the multiple M&TE equation given in Section 3.3.4.4 of Reference G.1:

$$m = \pm\sqrt{m_1^2 + m_2^2 + \ldots m_n^2}$$

$$I/I\,m = \pm\sqrt{0.059^2 + 0.080^2}$$

I/Im = ± 0.099 % span

8.1.33 Current-to-Current Converter Setting Tolerance (I/Iv)

Per Ref. P.11, P.12 and Assumption 5.1.2, the setting tolerance of the I/I Converter is ± 0.1 mAdc, and the calibrated span at the output is 40 mAdc (Section 6.8). Therefore,

I/Iv = ± (setting tolerance / calibrated span) * 100%
I/Iv = ± (0.1 mAdc / 40 mAdc) * 100%

I/Iv = ± 0.250 % span

8.1.34 Current-to-Current Converter Power Supply Effect (I/Ip)

From Reference G.8, the I/I Converter has been shown to experience a random power supply effect caused by the non-regulated portion of the internal 50-volt power supply. This primarily affects only the I/I Converters or current isolators. Therefore, per Assumption 5.1.1,

I/Ip = ± 1.000 % span

8.1.35 Current-to-Current Converter Temperature Effect (I/It)

Per Section 6.4.2, the Current-to-Current Converters are rack components located in the Control Room, which has an ambient temperature between 65 °F to 85 °F (for Tech Spec surveillance). From vendor information (Ref. V.3), the I/I Converter has an operating range of +40°F to +120 °F with no associated temperature effect. Therefore, the temperature effect is considered negligible.

I/It = ± 0.000 % span

8.1.36 Current-to-Current Converter Humidity Effect (I/Ih)

Per Section 3.3.3.20 of Reference G.1, changes in ambient humidity have a negligible effect on the uncertainty of the instruments used in this calculation. Therefore,

I/Ih = ± 0.000 % span

8.1.37 Current-to-Current Converter Radiation Effect (I/Ir)

The I/I Converters are located in the Control Room, which has a mild radiological environment under all plant conditions. Per Section 3.3.3.21 of Reference G.1, radiation errors are considered to be included in the drift error. Therefore,

I/Ir = ± 0.000 % span

8.1.38 Current-to-Current Converter Seismic Effect (I/Is)

There is no seismic effect provided by the vendor for the I/I Converter (Ref. V.3). Per Section 3.3.4.10 of Reference G.1, the effects of seismic or vibration events for non-mechanical instrumentation are considered zero unless vendor or industry experience indicates otherwise. Therefore,

I/Is = ± 0.000 % span

8.1.39 Indicator Accuracy (Ia)

Reference C.8 has determined the historical drift values for the indicator. Per Reference G.1, when drift error values have been statistically derived from As-Found/As-Left calibration data, the Accuracy of the indicator is included in the drift value. Therefore,

Ia **= ± 0.000 % span**

8.1.40 Indicator Drift (Id)

Per References P.11 and P.12, the PZR Pressure Indicators are Westinghouse HX-252 and they are calibrated individually. Reference C.8 is the As-Found/As-Left drift analysis for Westinghouse HX-252 indicators that are either string calibrated with Foxboro 66BC-O isolators or individually calibrated. Although the drift analysis performed in Reference C.8 does not specifically include the As-Found/As-Left data of the PZR Pressure Indicator, the 95/95 drift value calculated for an individually calibrated Westinghouse HX-252 indicator therein is considered representative of the indicators experienced at PBNP. Since the PZR Pressure Indicator are calibrated every 18 months (Ref. P.11 and P.12), the 100%, 2-year 95/95 drift value (Table 8.2 of Ref. C.8) is conservatively used. Therefore,

Id **= ± 1.028 % span**

Bias **= ± 0.000 % span**

8.1.41 Indicator M&TE Effect (Im)

Reference C.8 has determined the historical drift values for the indicator. Per Reference G.1, when drift error values have been statistically derived from As-Found/As-Left calibration data, the M&TE Effect of the indicator is included in the drift value. Therefore,

Im **= ± 0.000 % span**

8.1.42 Indicator Setting Tolerance (Iv)

Per References P.11, P.12 and Assumption 5.1.2, the setting tolerance is ± 0.8 mAdc, and the calibrated span is 40 mAdc (Section 6.8). Therefore,

Iv = ± (setting tolerance / calibrated span) * 100%
Iv = ± (0.8 mAdc / 40 mAdc) * 100%

Iv **= ± 2.000 % span**

8.1.43 Indicator Power Supply Effect (Ip)

Reference C.8 has determined the historical drift values for the indicator. Per Reference G.1, when drift error values have been statistically derived from As-Found/As-Left calibration data, the Power Supply Effect of the indicator is included in the drift value. Therefore,

Ip **= ± 0.000 % span**

8.1.44 Indicator Temperature Effect (It)

Per Section 6.4.2, the indicators are rack components located in the Control Room, which is environmentally controlled between 65 °F to 85 °F (for Tech Spec surveillance). The vendor information (Ref. V.7) does not provide

temperature effects for the indicators. Per Reference G.34, the temperature effect is included in the drift value. Therefore,

It = ± 0.000 % span

8.1.45 Indicator Humidity Effect (Ih)

Per Section 3.3.3.20 of Reference G.1, changes in ambient humidity have a negligible effect on the uncertainty of the instruments used in this calculation. Therefore,

Ih = ± 0.000 % span

8.1.46 Indicator Radiation Effect (Ir)

Per Section 6.4.2, the indicators are located in the Control Room, which has a mild radiological environment under all plant conditions. Reference C.8 has determined the historical drift values for the indicator string. Per Reference G.1, when drift error values have been statistically derived from As-Found/As-Left calibration data, the Radiation Effect of the indicator string is included in the drift value. Therefore,

Ir = ± 0.000 % span

8.1.47 Indicator Seismic Effect (Is)

There is no seismic effect provided by the vendor for the indicators (Ref. V.7). Vendor information also shows that the indicators are seismically qualified with no additional seismic effect specified. Therefore,

Is = ± 0.000 % span

8.1.48 Indicator Readability Effect (Irea)

Reference C.8 has determined the historical drift values for the indicator. Per Reference G.1, when drift error values have been statistically derived from As-Found/As-Left calibration data, the Readability Effect of the indicator is included in the drift value. Therefore,

Irea = ± 0.000 % span

8.1.49 Process Error (PE)

The uncertainties due to process considerations take into account transmitter calibration values, transmitter mounting elevation and sensing line density variations caused by the ambient temperature changes. The Process Error is conservatively considered as a bias.

Per Section 8.1 of Reference C.6, the height of the water leg of each of the transmitters is as shown below:

	Water Leg Height			
	PT-429	**PT-430**	**PT-431**	**PT-449**
Unit 1	279.25"	288.25"	276.25"	294.25"
Unit 2	285.75"	285.25"	279.25"	285.25"

The height varies from the maximum height of 294.25" (1PT-449) to a minimum height of 276.25" (1PT-431). Therefore, these limits are used as the bounding limits for the instrument loops.

Per Section 8.2 of Reference C.6, the transmitter calibration is applicable to water at 68 °F with a head correction of 10.6 psig. Section 6.4.1 of this calculation indicates that the transmitters are located inside the Containment Building, where the ambient temperature, and hence the water leg temperature, varies from 65 °F to 120 °F during normal operation, and up to 180 °F during an accident condition.

Per Section 6.8, the transmitter calibrated span is 800 psi.

The process error due to the density difference between the transmitter calibration temperature of 68 °F (62.3146 lb/ft^3) (Ref. G.5) and the minimum operating temperature of 65°F (62.3344 lb/ft^3) is small and considered negligible. The largest error will occur when the ambient temperature swings to the maximum normal and accident temperatures.

Normal Operating Conditions

Per Reference G.5, the density at the maximum operating temperature of 120 °F is,

ρ_{120} = 61.7093 lb/ft^3

The head correction ($H_{120\text{-}MAX}$) at the maximum water leg height of 294.25" is

$H_{120\text{-}MAX}$ = 294.25" * 61.7093 lb/ft^3 * 0.0005787 ft^3/in^3
$H_{120\text{-}MAX}$ = 10.508 psi

The head correction ($H_{120\text{-}MIN}$) at the minimum water leg height of 276.25" is

$H_{120\text{-}MIN}$ = 276.25" * 61.7093 lb/ft^3 * 0.0005787 ft^3/in^3
$H_{120\text{-}MIN}$ = 9.865 psi

The Process Error (PE) is,

PE = (Indicated Value – Ideal Value) * 100% span / calibrated span

$PE_{120\text{-}MAX}$ = (10.508 psi – 10.6 psi) * 100% span / 800 psi
$PE_{120\text{-}MAX}$ = -0.012 % span

$PE_{120\text{-}MIN}$ = (9.865 psi – 10.6 psi) * 100% span / 800 psi
$PE_{120\text{-}MIN}$ = -0.092 % span

From the above, the bounding process error under normal conditions is -0.092 % span and considered as a bias. Therefore,

PE_n = -0.092 % span

Accident Conditions

Per Reference G.5, the density at the maximum accident condition of 286 °F is,

ρ_{286} = 57.7533 lb/ft^3

The head correction ($H_{a\text{-}MAX}$) at the maximum water leg height of 294.25" is

$H_{a\text{-}MAX}$ = 294.25" * 57.7533 lb/ft^3 * 0.0005787 ft^3/in^3
$H_{a\text{-}MAX}$ = 9.834 psi

The head correction ($H_{a\text{-}MIN}$) at the minimum water leg height of 276.25" is

$H_{a\text{-}MIN}$ = 276.25" * 57.7533 lb/ft^3 * 0.0005787 ft^3/in^3
$H_{a\text{-}MIN}$ = 9.233 psi

The Process Error (PE) is,

PE = (Indicated Value – Ideal Value) * 100% span / calibrated span

$PE_{a\text{-}MAX}$ = (9.834 psi – 10.6 psi) * 100% span / 800 psi
$PE_{a\text{-}MAX}$ = -0.096 % span

$PE_{a\text{-}MIN}$ = (9.233 psi – 10.6 psi) * 100% span / 800 psi
$PE_{a\text{-}MIN}$ = -0.171 % span

From the above, the bounding process error under accident conditions is -0.171 % span and considered as a bias. Therefore,

PE_a = -0.171 % span

8.1.50 Ambient Pressure (PA) Effect

The transmitters are located in the Containment Building (Section 6.4.1). Per Reference V.6, the Foxboro N-E11GM transmitters have one side of the sensing bellows vented to the atmosphere. According to Technical Specification 3.6.4, (Ref. G.2), the containment ambient pressure is normally maintained at ± 2 psig and per Section 6.8, the transmitter calibrated span is 800 psi. Since the containment pressure varies randomly, the ambient pressure effect during normal operation is also treated as a random error. Therefore,

PA_n = ± (2.0 psig * 100 % span) / 800 psi

PA_n = ± 0.250 % span

In the event of a high energy line break (HELB) in containment, such as a LOCA, the containment pressure could exceed the normal 2 psig limit. Since some increase in pressure is expected following any HELB, this ambient pressure effect during accident conditions should be considered a bias. In such a situation, the protective functions of interest are the low pressurizer pressure reactor trip and the low pressurizer pressure safety injection, both of which involve decreasing pressurizer pressure. The effect of increased *containment* pressure is to make the indicated value of *pressurizer* pressure less than ideal and, thus, to bring it closer to the actuation setpoint. It is therefore conservative to ignore the accident ambient pressure effect. However, per Sections 6.6 and 6.10, the same conditions cause both the accident ambient pressure and the insulation resistance effects. The accident ambient pressure bias is therefore calculated to offset the insulation resistance bias, per Section 7.1.2.

Attachment G calculates the accident ambient pressure to be 15 psig, therefore,

Error = Indicated Value – Ideal Value

PA_a = [(-15 psig-0 psig) * 100 % span] / 800 psi

PA_a = -1.875 % span

8.1.51 Accident Insulation Resistance Effect (IR)

Leakage currents during accident conditions (HELB or LOCA) cause a reduction in insulation resistance of the cables, penetrations and splices for the PZR Pressure loop configuration. The instrument loop is a 10 to 50 mAdc current loop with a Foxboro N-E11GM transmitter. If the leakage current develops in the loop due to cable insulation degradation, the path is represented as a shunt resistance in parallel to the transmitter. From References D.14 through D.36 and P.16 through P.23, the PZR Pressure sensor circuit can be represented as follows:

Figure 8.1.51-1
Signal Transmission Components

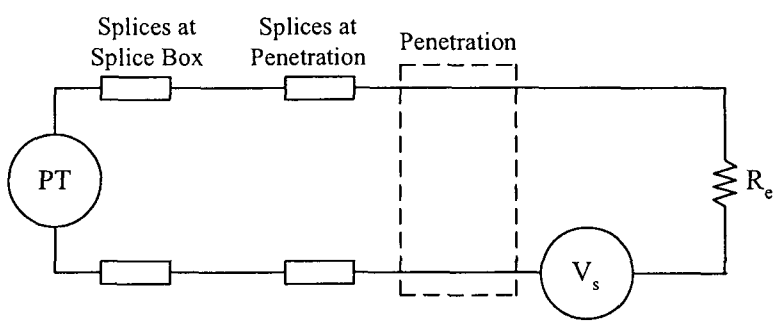

The signal transmission components (signal cables, splices and penetrations) are in the harsh environment (in the containment) and are subject to IR degradation during an accident.

The equivalent circuit schematic representing the above wiring diagram showing IR leakage path is shown below:

Figure 8.1.51-2
Equivalent Circuit Schematic

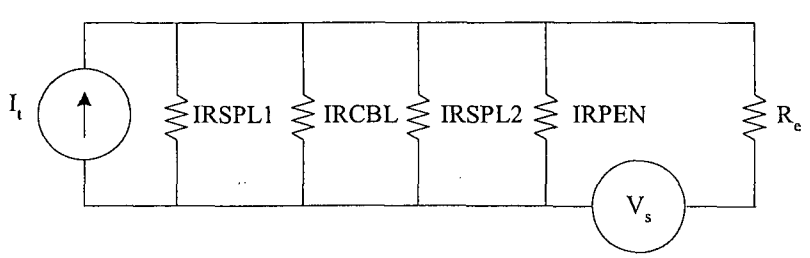

where,

I_t = Device output current at point of interest.
IRCBL = IR value of the signal cable.
IRSPL = IR value of the splice at the penetration.

IRPEN = IR value of the penetration cable.
V_s = Source Voltage in volts
R_e = Input load impedance in ohms

The above circuit (Figure 8.1.51-2) can be further simplified as follows:

Figure 8.1.51-3
Simplified Circuit

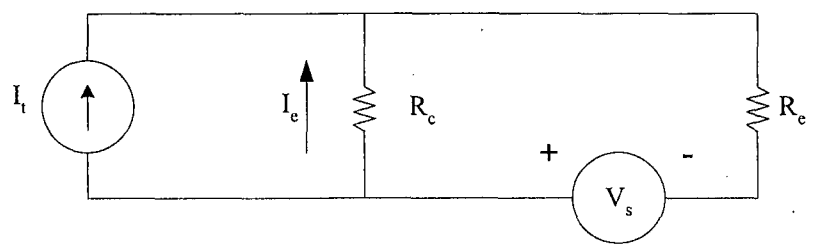

where,

$$\frac{1}{R_c} = \frac{1}{IRSPL1} + \frac{1}{IRCBL} + \frac{1}{IRSPL2} + \frac{1}{IRPEN} \qquad \text{(Eq. 8.1.51-1)}$$

The signal cables run from the transmitters, through a splice box near the transmitter, then splice into the electrical penetration assemblies (EPA) and exit the containment through EPA 1(2)Q19, 1(2)Q24, 1(2)Q55 and 1(2)Q56.

The environmental conditions in the containment are defined in Section 6.4.1.

- References G.17, G.18 and P.16 through P.23 indicate that the splices at the splice box near the transmitter use Raychem Type WCSF-N splices. From Table 1 of Reference G.50, the lowest IR value is $1.2 \times 10^7\ \Omega$ at 314 °F. Therefore,

  IRSPL1 $= 1.2 \times 10^7\ \Omega$

- From Section 6.8, the longest cable length (from the transmitter to the penetration) is 175 feet (1PT-429) and the cable is manufactured by Okonite with silicone rubber insulation and a PVC jacket. Reference G.41, Note 1.1 indicates that specimen 4B of test sample Group II tested per Okonite Company Test Report F-C3694 (Ref. G.40) is representative of the Okonite cable installed in PBNP. Per Section 5.3 of Reference G.40, Table 3, the lowest cable insulation resistance measured during LOCA testing at 315 °F for specimen 4B is $1.9 \times 10^6\ \Omega$ for 20 feet of cable. Using the longest cable run of 175 feet to calculate the bounding cable IR value.

  IRCBL $= (1.9 \times 10^6\ \Omega) * (20\ ft/175\ ft) = 2.171 \times 10^5\ \Omega$

- References D.36 and G.35 indicates that the penetration splices are Raychem Type SFR. Reference G.35 indicates that the splices are tested and qualified per Westinghouse Report WCAP-7410-L (Ref. G.36). Per Reference G.36, Section 6, Table 11, at 5-3/4 hours after the start of the test, for the cable and splices with pair of conductors, the IR value is,

  IRSPL2 $= 0.340 \times 10^6\ \Omega = 3.4 \times 10^5\ \Omega$

- Per Reference G.39, the electrical penetration assemblies consist of #16 twisted shielded pair cables type 7244-H-002, manufactured by Boston Insulated Wire and Cable Co. (BIW). Reference G.39 also indicates that 12 feet of cable (pigtail) extend from the inboard end of the penetration assembly. Per Reference G.43, page 13, the measured IR at 316 °F and 500 Vdc is $8.0 \times 10^6\ \Omega$/foot. Therefore, the IR value of the penetration (IRPEN) is,

  $$IRPEN = (8.0 \times 10^6\ \Omega) * (1\ ft/12\ ft) = 6.667 \times 10^5\ \Omega$$

- Per Reference V.4, the nominal output voltage of the power supply is 80 Vdc. Therefore,

  $$V_s = 80\ Vdc$$

- From Figure 6.2-1 and References D.1 – D.4 and D.6 – D.13, the transmitter load consists of the Lead/Lag Module, I/I Converter, 2 bistables and four 10-Ω test resistors (including the one at the transmitter). Per References V1 – V.3, V.5 and V.6, the input resistance of the Lead/Lag Module is 200 Ω, the I/I Converter and the bistables are each 100 Ω. Therefore, the load around the loop is,

  $$R_c = 200\ \Omega + 100\ \Omega + 100\ \Omega + 100\ \Omega + 40\ \Omega = 540\ \Omega$$

Substituting the above values into Eq. 8.1.51-1 gives

$$\frac{1}{R_c} = \frac{1}{IRSPL1} + \frac{1}{IRCBL} + \frac{1}{IRSPL2} + \frac{1}{IRPEN}$$

$$\frac{1}{R_c} = \frac{1}{1.2 \times 10^7} + \frac{1}{2.171 \times 10^5} + \frac{1}{3.4 \times 10^5} + \frac{1}{6.667 \times 10^5}$$

$$R_c = 1.095 \times 10^5\ \Omega$$

Substituting the above values, together with the minimum input current, $I_t = 10$ mAdc (for maximum error) in Equation 1, Appendix G of Reference G.1 gives

$$I_e = \frac{V_s - (R_c)(I_t)}{R_c + R_e}$$

$$I_e = \frac{80 - (540)(10 \times 10^{-3})}{1.095 \times 10^5 + 540}$$

$$I_e = 0.000678\ A = 0.678\ mAdc$$

Substituting in Equation 2, Appendix G of Reference G.1 to obtain the error in percent span.

$$IR = \frac{I_e}{I_{max} - I_{min}} * 100\%$$

$$IR = \frac{0.678}{50 - 10} * 100\%$$

IR = + 1.695 % span

8.2 Device Uncertainty Summary

8.2.1 Sensor Uncertainties

Parameter	95/95 Uncertainty (% span)	Reference Section
Sensor Accuracy (Sa)	± 0.000	8.1.1
Sensor Drift (Sd) (Bias)	± 0.844 ± 0.000	8.1.2
Sensor M&TE (Sm)	± 0.000	8.1.3
Sensor Setting Tolerance (Sv)	± 0.500	8.1.4
Sensor Power Supply Effect (Sp)	± 0.000	8.1.5
Sensor Temperature Effect (St)	$St_n = \pm 1.538$ $St_a = \pm 3.215$	8.1.6
Sensor Humidity Effect (Sh)	± 0.000	8.1.7
Sensor Radiation Effect (Sr)	± 0.000	8.1.8
Sensor Seismic Effect (Ss)	$Ss_n = \pm 0.000$ $Ss_{a1} = \pm 1.000$ $Ss_{a2} = \pm 0.000$	8.1.9
Sensor Static Pressure Effect (Sspe)	± 0.000	8.1.10
Sensor Overpressure Effect (Sope)	± 0.000	8.1.11

8.2.2 Bistable Uncertainties

Parameter	95/95 Uncertainty (% span)	Reference Section
Bistable Accuracy (Ba)	± 0.000	8.1.12
Bistable Drift (Bd) (Bias)	± 0.222 ± 0.000	8.1.13
Bistable M&TE (Bm)	± 0.000	8.1.14
Bistable Setting Tolerance (Bv)	± 0.500	8.1.15
Bistable Power Supply Effect (Bp)	± 0.000	8.1.16
Bistable Temperature Effect (Bt)	± 0.000	8.1.17
Bistable Humidity Effect (Bh)	± 0.000	8.1.18
Bistable Radiation Effect (Br)	± 0.000	8.1.19
Bistable Seismic Effect (Bs)	± 0.000	8.1.20

8.2.3 Lead/Lag Module Uncertainties

Parameter	95/95 Uncertainty (% span)	Reference Section
Lead/Lag Module Accuracy (LLa)	± 0.500	8.1.21
Lead/Lag Module Drift (LLd)	± 0.500	8.1.22
Lead/Lag Module M&TE (LLm)	± 0.083	8.1.23
Lead/Lag Module Setting Tolerance(LLv)	± 0.500	8.1.24
Lead/Lag Module Power Supply Effect (LLp)	± 0.000	8.1.25
Lead/Lag Module Temperature Effect (LLt)	± 0.000	8.1.26
Lead/Lag Module Humidity Effect (LLh)	± 0.000	8.1.27
Lead/Lag Module Radiation Effect (LLr)	± 0.000	8.1.28
Lead/Lag Module Seismic Effect (LLs)	± 0.000	8.1.29

8.2.4 Current-to-Current Converter Uncertainties

Parameter	95/95 Uncertainty (% span)	Reference Section
Current-to-Current Converter Accuracy (I/Ia)	± 0.500	8.1.30
Current-to-Current Converter Drift (I/Id)	± 0.500	8.1.31
Current-to-Current Converter M&TE (I/Im)	± 0.099	8.1.32
Current-to-Current Converter Setting Tolerance(I/Iv)	± 0.250	8.1.33
Current-to-Current Converter Power Supply Effect (I/Ip)	± 1.000	8.1.34
Current-to-Current Converter Temperature Effect (I/It)	± 0.000	8.1.35
Current-to-Current Converter Humidity Effect (I/Ih)	± 0.000	8.1.36
Current-to-Current Converter Radiation Effect (I/Ir)	± 0.000	8.1.37
Current-to-Current Converter Seismic Effect (I/Is)	± 0.000	8.1.38

8.2.5 Indicator Uncertainties

Parameter	95/95 Uncertainty (% span)	Reference Section
Indicator Accuracy (Ia)	± 0.000	8.1.39
Indicator Drift (Id) (Bias)	± 1.028 ± 0.000	8.1.40
Indicator M&TE (Im)	± 0.000	8.1.41
Indicator Setting Tolerance(Iv)	± 2.000	8.1.42
Indicator Power Supply Effect (Ip)	± 0.000	8.1.43
Indicator Temperature Effect (It)	± 0.000	8.1.44
Indicator Humidity Effect (Ih)	± 0.000	8.1.45
Indicator Radiation Effect (Ir)	± 0.000	8.1.46
Indicator Seismic Effect (Is)	± 0.000	8.1.47
Indicator Readability Effect (Irea)	± 0.000	8.1.48

8.2.6 Process Considerations

Parameter	Uncertainty (% span)		Reference Section
	Normal Conditions	Accident Conditions	
Process Error (PE_n and PE_a)	PE_n = - 0.092	PE_a = - 0.171	8.1.49
Ambient Pressure Effect (PA_n and PA_a)	± 0.250 (random – 95/95)	-1.875	8.1.50
Insulation Resistance Effect (IR)	± 0.000	+ 1.695	8.1.51

8.3 Total Loop Errors

8.3.1 Total High PZR Pressure Reactor Trip Error ($TLE_{H\text{-}RPS}$)

The High PZR Pressure Reactor Trip is an increasing setpoint. Per Section 7.1.5, it is only necessary to calculate the negative TLE.

Using Eq. 7.1.2-1 (bias consists of PE_n from Section 8.2.6),

$$TLE_{H\text{-}RPS}^{-} = -\sqrt{\begin{array}{l} Sa^2 + Ba^2 + Sd^2 + Bd^2 + Sm^2 + Bm^2 \\ + Sv^2 + Bv^2 + Sp^2 + Bp^2 + St_n^{\ 2} + Bt^2 \\ + Sh^2 + Bh^2 + Sr^2 + Br^2 \\ + Ss_{al}^{\ 2} + Bs^2 + Sspe^2 + Sope^2 + PA_n^{\ 2} \end{array}} + Biases^{-}$$

Substituting,

$$TLE_{H\text{-}RPS\text{-}rdm}^{-} = -\sqrt{\begin{array}{l} 0^2 + 0^2 + 0.844^2 + 0.222^2 + 0^2 + 0^2 \\ + 0.500^2 + 0.500^2 + 0^2 + 0^2 + 1.538^2 + 0^2 \\ + 0^2 + 0^2 + 0^2 + 0^2 \\ + 1.000^2 + 0^2 + 0^2 + 0^2 + 0.250^2 \end{array}}$$

$TLE_{H\text{-}RPS\text{-}rdm}^{-}$ = - 2.166 % span **(95/95)**

$TLE_{H\text{-}RPS\text{-}bias}^{-}$ = - 0.092 % span

8.3.2 Total Low PZR Pressure Reactor Trip – Dropped Rod Error ($TLE_{L\text{-}RPS\text{-}ROD}$)

The Low PZR Pressure Reactor Trip is a decreasing setpoint. Per Section 7.1.5, it is only necessary to calculate the positive TLE.

Using Eq. 7.1.2-2,

$$TLE_{L\text{-}RPS\text{-}ROD}^{+} = +\sqrt{\begin{array}{l} Sa^2 + LLa^2 + Ba^2 + Sd^2 + LLd^2 + Bd^2 \\ + Sm^2 + LLm^2 + Bm^2 + Sv^2 + LLv^2 + Bv^2 \\ + Sp^2 + LLp^2 + Bp^2 + St_n^{\ 2} + LLt^2 + Bt^2 \\ + Sh^2 + LLh^2 + Bh^2 + Sr^2 + LLr^2 + Br^2 \\ + Ss_{al}^{\ 2} + LLs^2 + Bs^2 + Sspe^2 + Sope^2 + PA_n^{\ 2} \end{array}} + Biases^{+}$$

Substituting,

$$TLE_{L\text{-}RPS\text{-}ROD\text{-}rdm}{}^{+} = +\sqrt{\begin{array}{l} 0^2 + 0.500^2 + 0^2 + 0.844^2 + 0.500^2 + 0.222^2 \\ + 0^2 + 0.083^2 + 0^2 + 0.500^2 + 0.500^2 + 0.500^2 \\ + 0^2 + 0^2 + 0^2 + 1.538^2 + 0^2 + 0^2 \\ + 0^2 + 0^2 + 0^2 + 0^2 + 0^2 + 0^2 \\ + 1.000^2 + 0^2 + 0^2 + 0^2 + 0^2 + 0.250^2 \end{array}}$$

$$\mathbf{TLE_{L\text{-}RPS\text{-}ROD\text{-}rdm}{}^{+} = +\ 2.334\ \%\ span} \qquad \textbf{(95/95)}$$

$$\mathbf{TLE_{L\text{-}RPS\text{-}ROD\text{-}bias}{}^{+} = +\ 0.000\ \%\ span}$$

8.3.3 Total Low PZR Pressure Reactor Trip – SBLOCA Error ($TLE_{L\text{-}RPS\text{-}LOCA}$)

The Low PZR Pressure Reactor Trip is a decreasing setpoint. Per Section 7.1.5, it is only necessary to calculate the positive TLE. Per Section 7.1.2, the IR and PA biases are offsetting and may be algebraically combined. As shown for the accident conditions in Section 8.2.6, the negative PA bias has a greater magnitude than the positive IR bias, no positive bias is considered in the Low PZR Pressure Reactor Trip TLE.
Using Eq. 7.1.2-3,

$$TLE_{L\text{-}RPS\text{-}LOCA}{}^{+} = +\sqrt{\begin{array}{l} Sa^2 + LLa^2 + Ba^2 + Sd^2 + LLd^2 + Bd^2 \\ + Sm^2 + LLm^2 + Bm^2 + Sv^2 + LLv^2 + Bv^2 \\ + Sp^2 + LLp^2 + Bp^2 + St_a{}^2 + LLt^2 + Bt^2 \\ + Sh^2 + LLh^2 + Bh^2 + Sr^2 + LLr^2 + Br^2 \\ + Ss_{a2}{}^2 + LLs^2 + Bs^2 + Sspe^2 + Sope^2 \end{array}} + Biases^{+}$$

Substituting,

$$TLE_{L\text{-}RPS\text{-}LOCA\text{-}rdm}{}^{+} = +\sqrt{\begin{array}{l} 0^2 + 0.500^2 + 0^2 + 0.844^2 + 0.500^2 + 0.222^2 \\ + 0^2 + 0.083^2 + 0^2 + 0.500^2 + 0.500^2 + 0.500^2 \\ + 0^2 + 0^2 + 0^2 + 3.215^2 + 0^2 + 0^2 \\ + 0^2 + 0^2 + 0^2 + 0^2 + 0^2 + 0^2 \\ + 0^2 + 0^2 + 0^2 + 0^2 + 0^2 \end{array}}$$

$$\mathbf{TLE_{L\text{-}RPS\text{-}LOCA\text{-}rdm}{}^{+} = +\ 3.515\ \%\ span} \qquad \textbf{(95/95)}$$

$$\mathbf{TLE_{L\text{-}RPS\text{-}LOCA\text{-}bias}{}^{+} = +\ 0.000\ \%\ span}$$

8.3.4 Total Low PZR Pressure SI Actuation ($TLE_{L\text{-}SI}$)

The Low PZR Pressure SI Actuation is a decreasing setpoint. Per Section 7.1.5, it is only necessary to calculate the positive TLE. Per Section 7.1.2, the IR and PA biases are offsetting and may be algebraically combined. As shown for the accident conditions in Section 8.2.6, the negative PA bias has a greater magnitude than the positive IR bias, no positive bias is considered in the Low PZR Pressure SI Actuation TLE.

Using Eq. 7.1.2-4,

$$TLE_{L\text{-}SI}^{+} = +\sqrt{\begin{array}{l} Sa^2 + Ba^2 + Sd^2 + Bd^2 + Sm^2 + Bm^2 \\ + Sv^2 + Bv^2 + Sp^2 + Bp^2 + St_a^{\ 2} + Bt^2 \\ + Sh^2 + Bh^2 + Sr^2 + Br^2 \\ + Ss_{a2}^{\ 2} + Bs^2 + Sspe^2 + Sope^2 \end{array}} + Biases^{+}$$

Substituting,

$$TLE_{L\text{-}SI\text{-}rdm}^{+} = +\sqrt{\begin{array}{l} 0^2 + 0^2 + 0.844^2 + 0.222^2 + 0^2 + 0^2 \\ + 0.500^2 + 0.500^2 + 0^2 + 0^2 + 3.215^2 + 0^2 \\ + 0^2 + 0^2 + 0^2 + 0^2 \\ + 0^2 + 0^2 + 0^2 + 0^2 \end{array}}$$

$$\mathbf{TLE_{L\text{-}SI\text{-}rdm}^{+} = +\ 3.406\ \%\ span} \qquad \textbf{(95/95)}$$

$$\mathbf{TLE_{L\text{-}SI\text{-}bias}^{+} = +\ 0.000\%\ span}$$

8.3.5 Total Normal Indicator Loop Error ($TLE_{N\text{-}IND}$)

Using Eq. 7.1.2-5 (bias consists of PE_n from Section 8.2.6),

$$TLE_{N\text{-}IND} = \pm\sqrt{\begin{array}{l} Sa^2 + I/Ia^2 + Ia^2 + Sd^2 + I/Id^2 + Id^2 \\ + Sm^2 + I/Im^2 + Im^2 + Sv^2 + I/Iv^2 + Iv^2 \\ + Sp^2 + I/Ip^2 + Ip^2 + St_n^{\ 2} + I/It^2 + It^2 \\ + Sh^2 + I/Ih^2 + Ih^2 + Sr^2 + I/Ir^2 + Ir^2 \\ + Ss_n^{\ 2} + I/Is^2 + Is^2 + Sspe^2 + Sope^2 + Irea^2 + PA_n^{\ 2} \end{array}} + Biases$$

Substituting,

$$TLE_{N\text{-}IND\text{-}rdm} = \pm \sqrt{\begin{array}{l} 0^2 + 0.500^2 + 0^2 + 0.844^2 + 0.500^2 + 1.028^2 \\ + 0^2 + 0.099^2 + 0^2 + 0.500^2 + 0.250^2 + 2.000^2 \\ + 0^2 + 1.000^2 + 0^2 + 1.538^2 + 0^2 + 0^2 \\ + 0^2 + 0^2 + 0^2 + 0^2 + 0^2 + 0^2 \\ + 0^2 + 0^2 + 0^2 + 0^2 + 0^2 + 0^2 + 0.250^2 \end{array}}$$

$TLE_{N\text{-}IND\text{-}rdm}$ $= \pm 3.165$ (95/95)

Per Section 7.1.1, the random Total Normal Indicator Loop Error is expressed as a 75/75 value. Per Section 3.3.3.13 of Reference G.1, the Total Normal Indicator Loop Error ($TLE_{N\text{-}IND}$) is converted from 95/95 to 75/75 statistics as follows:

$TLE_{N\text{-}IND\text{-}rdm}$ $= \pm 3.165$ % span * (1.15/1.96)
$TLE_{N\text{-}IND\text{-}rdm}$ $= \pm 1.857$ % span (75/75)

$TLE_{N\text{-}IND\text{-}bias}$ $= -0.092$% span

$TLE_{N\text{-}IND}^{+}$ $= +1.857$ % span
$TLE_{N\text{-}IND}^{-}$ $= -1.857$ % span - 0.092 % span
$TLE_{N\text{-}IND}^{-}$ $= -1.949$ % span

The Total Normal Indicator Loop Error ($TLE_{N\text{-}IND}$) is conservatively considered to be ±1.949 % span.

$TLE_{N\text{-}IND}$ $= \pm 1.949$ % span **(75/75)**

From Section 6.8, the calibrated span in engineering units is 800 psi. Converting the Total Normal Indicator Loop Error ($TLE_{N\text{-}IND}$) to process units gives,

$TLE_{N\text{-}IND}$ $= \pm (1.949$ % span) * (800 psi) / 100%

$TLE_{N\text{-}IND}$ $= \pm 15.592$ psi (75/75)

Per Reference G.44, the Control Room indication for PZR Pressure (PI-429, PI-430, PI-431 and PI-449) has a minor division of 20 psi. The $TLE_{N\text{-}IND}$ value is rounded to the precision that is readable on the associated loop indicator. Per Section 3.3.5.3 of Reference G.1, the readability of these indicators is ± ½ the smallest division (or 10 psi). Therefore, the $TLE_{N\text{-}IND}$ value is rounded up to the nearest 10 psig interval.

$TLE_{N\text{-}IND}$ $= \pm 20.0$ psi **(75/75)**

8.4 Setpoint Evaluations

8.4.1 High PZR Pressure Reactor Trip Setpoint Evaluation – Current Power Level

For an increasing setpoint towards the Analytical Limit, Equation 7.1.5-1 is used.

$$LTSP_{H\text{-}RPS}\uparrow = AL_{H\text{-}RPS} + [(0.839)^* TLE_{H\text{-}RPS\text{-}rdm}^- + TLE_{H\text{-}RPS\text{-}bias}^-]PS$$

Where:

$AL_{H\text{-}RPS}$	= 2410 psig	Section 6.5
$TLE_{H\text{-}RPS\text{-}rdm}^-$	= - 2.166 % span	Section 8.3.1
$TLE_{H\text{-}RPS\text{-}bias}^-$	= - 0.092 % span	Section 8.3.1
PS	= 800 psi	Section 6.9

Substituting,

$$TLE_{H\text{-}RPS\text{-}total} = (0.839 * -2.166\% - 0.092\%) = -1.909\ \%\ \text{span}$$

$$LTSP_{H\text{-}RPS} = 2410\text{psig} + \frac{-1.909\% * 800\text{psi}}{100\%}$$

$$\mathbf{LTSP_{H\text{-}RPS} = 2394.7\ psig} \qquad \textbf{(95/95)}$$

From Section 6.5, the Field Trip Setpoint ($FTSP_{H\text{-}RPS}$) for High PZR Pressure Reactor Trip is 2365.0 psig. The $FTSP_{H\text{-}RPS}$ is less than the calculated $LTSP_{H\text{-}RPS}$. Per Section 2.0, the $FTSP_{H\text{-}RPS}$ is conservative and is acceptable.

<u>Margin-to-Trip Evaluation</u>

Per Attachment E, the Margin-to-Trip should remain above the peak process parameter of 2351 psia under normal operating conditions. Using Equation 7.4-1,

$$\text{Margin-to-Trip} = FTSP - (TLE^*PS)$$

$$= 2365\ \text{psig} + \frac{-1.909\% * 800\ \text{psi}}{100\%}$$

$$= 2349.7\ \text{psig or } 2364.4\ \text{psia}$$

Therefore, since the Margin-to-Trip (2364.4 psia) is greater than the Peak Process Parameter (2351 psia), the Field Trip Setpoint ($FTSP_{H\text{-}RPS}$) is acceptable.

The margin between $LTSP_{H\text{-}RPS}$ and $FTSP_{H\text{-}RPS}$ is calculated in accordance with Section 3.3.8.5 of Reference G.1:

$$\text{Margin} = LTSP_{H\text{-}RPS} - FTSP_{H\text{-}RPS}$$

Where:

$LTSP_{H\text{-}RPS}$	= 2394.7 psig	
$FTSP_{H\text{-}RPS}$	= 2365.0 psig	Section 6.5

Substituting,

$$\text{Margin} = 2394.7\ \text{psig} - 2365.0\ \text{psig}$$

$$\mathbf{Margin = 29.7\ psi}$$

8.4.2 High PZR Pressure Reactor Trip Setpoint Evaluation - EPU

For an increasing setpoint towards the Analytical Limit, Equation 7.1.5-1 is used.

$$LTSP_{H\text{-}RPS}\uparrow = AL_{H\text{-}RPS} + [(0.839)^* TLE_{H\text{-}RPS\text{-}rdm}^- + TLE_{H\text{-}RPS\text{-}bias}^-]PS$$

Where:

$AL_{H\text{-}RPS}$	= 2403 psig	Section 6.5
$TLE_{H\text{-}RPS\text{-}rdm}^-$	= - 2.166 % span	Section 8.3.1
$TLE_{H\text{-}RPS\text{-}bias}^-$	= - 0.092 % span	Section 8.3.1
PS	= 800 psi	Section 6.9

Substituting,

$$TLE_{H\text{-}RPS\text{-}total} = (0.839 * -2.166\% - 0.092\%) = -1.909\ \%\ \text{span}$$

$$LTSP_{H\text{-}RPS} = 2403\ \text{psig} + \frac{-1.909\% * 800\text{psi}}{100\%}$$

$$\mathbf{LTSP_{H\text{-}RPS} = 2387.7\ psig} \qquad \textbf{(95/95)}$$

From Section 6.5, the Field Trip Setpoint ($FTSP_{H\text{-}RPS}$) for High PZR Pressure Reactor Trip is 2365.0 psig. The $FTSP_{H\text{-}RPS}$ is less than the calculated $LTSP_{H\text{-}RPS}$. Per Section 2.0, the $FTSP_{H\text{-}RPS}$ is conservative and is acceptable.

<u>Margin-to-Trip Evaluation</u>

Per Attachment E, the Margin-to-Trip should remain above the peak process parameter of 2351 psia under normal operating conditions. Using Equation 7.4-1,

$$\text{Margin-to-Trip} = FTSP - (TLE^*PS)$$

$$= 2365\ \text{psig} + \frac{-1.909\% * 800\ \text{psi}}{100\%}$$

$$= 2349.7\ \text{psig or } 2364.4\ \text{psia}$$

Therefore, since the Margin-to-Trip (2364.4 psia) is greater than the Peak Process Parameter (2351 psia), the Field Trip Setpoint ($FTSP_{H\text{-}RPS}$) is acceptable.

The margin between $LTSP_{H\text{-}RPS}$ and $FTSP_{H\text{-}RPS}$ is calculated in accordance with Section 3.3.8.5 of Reference G.1:

$$\text{Margin} = LTSP_{H\text{-}RPS} - FTSP_{H\text{-}RPS}$$

Where:

$LTSP_{H\text{-}RPS}$	= 2387.7 psig	
$FTSP_{H\text{-}RPS}$	= 2365.0 psig	Section 6.5

Substituting,

$$\text{Margin} = 2387.7\ \text{psig} - 2365.0\ \text{psig}$$

$$\mathbf{Margin = 22.7\ psi}$$

8.4.3 Low PZR Pressure Reactor Trip Setpoint Evaluation – Current Power Level

Low PZR Pressure Reactor Trip – Dropped Rod

For a decreasing setpoint towards the Analytical Limit, Equation 7.1.5-2 is used.

$$LTSP_{L\text{-}RPS\text{-}ROD}\downarrow = AL_{L\text{-}RPS\text{-}ROD} + [(0.839)*TLE_{L\text{-}RPS\text{-}ROD\text{-}rdm}^{+} + TLE_{L\text{-}RPS\text{-}ROD\text{-}bias}^{+}]PS$$

Where:

$AL_{L\text{-}RPS\text{-}ROD}$	= 1815 psig	Section 6.5
$TLE_{L\text{-}RPS\text{-}ROD\text{-}rdm}^{+}$	= + 2.334 % span	Section 8.3.2
$TLE_{L\text{-}RPS\text{-}ROD\text{-}bias}^{+}$	= + 0.000 % span	Section 8.3.2
PS	= 800 psi	Section 6.9

Substituting,

$$TLE_{L\text{-}RPS\text{-}ROD\text{-}total} = (0.839 * 2.334\% + 0.000\%) = 1.958\ \%\ \text{span}$$

$$LTSP_{L\text{-}RPS\text{-}ROD}\downarrow = 1815\text{psig} + \frac{1.958\% * 800\text{psi}}{100\%}$$

$$\mathbf{LTSP_{L\text{-}RPS\text{-}ROD}\downarrow = 1830.7\ psig} \qquad \textbf{(95/95)}$$

Low PZR Pressure Reactor Trip – SBLOCA

For a decreasing setpoint towards the Analytical Limit, Equation 7.1.5-2 is used.

$$LTSP_{L\text{-}RPS\text{-}LOCA}\downarrow = AL_{L\text{-}RPS\text{-}LOCA} + [(0.839)*TLE_{L\text{-}RPS\text{-}LOCA\text{-}rdm}^{+} + TLE_{L\text{-}RPS\text{-}LOCA\text{-}bias}^{+}]PS$$

Where:

$AL_{L\text{-}RPS\text{-}LOCA}$	= 1648 psig	Section 6.5
$TLE_{L\text{-}RPS\text{-}LOCA\text{-}rdm}^{+}$	= + 3.515 % span	Section 8.3.3
$TLE_{L\text{-}RPS\text{-}LOCA\text{-}bias}^{+}$	= + 0.000 % span	Section 8.3.3
PS	= 800 psi	Section 6.9

Per Section 6.7.1, the Low PZR Pressure Reactor Trip (SBLOCA) analytical limit is lower than the calibrated span of the transmitter and should be replaced in the setpoint evaluation by the lower span limit of the transmitter.

$$LTSP_{L\text{-}RPS\text{-}LOCA}\downarrow = 1700\text{psig} + \frac{(0.839 * 3.515\% + 0.000\%) * 800\text{psi}}{100\%}$$

$$\mathbf{LTSP_{L\text{-}RPS\text{-}LOCA}\downarrow = 1723.6\ psig} \qquad \textbf{(95/95)}$$

The LTSP for the Low PZR Pressure Reactor Trip is taken to be the most conservative of the LTSPs calculated above. Therefore,

$$\mathbf{LTSP_{L\text{-}RPS} = 1830.7\ psig}$$

From Section 6.5, the Field Trip Setpoint ($FTSP_{L\text{-}RPS}$) for Low PZR Pressure Reactor Trip is 1925.0 psig. The $FTSP_{L\text{-}RPS}$ is greater than the calculated $LTSP_{L\text{-}RPS}$. Per Section 2.1, the $FTSP_{L\text{-}RPS}$ is conservative and is acceptable.

Margin-to-Trip Evaluation

Per Attachment E, the Margin-to-Trip should remain below the peak process parameter of 2136 psia under normal operating conditions. The loop uncertainty for normal environmental conditions is for the dropped rod case. Using Equation 7.4-2,

$$\text{Margin-to-Trip} = FTSP + (TLE*PS)$$

$$= 1925 \text{ psig} + \frac{1.958\% * 800\text{psi}}{100\%}$$

$$= 1940.7 \text{ psig or } 1955.4 \text{ psia}$$

Therefore, since the Margin-to-Trip (1955.4 psia) is less than the Peak Process Parameter (2136 psia), the Field Trip Setpoint ($FTSP_{L\text{-}RPS}$) is acceptable.

The worst-case margin between $LTSP_{L\text{-}RPS}$ and $FTSP_{L\text{-}RPS}$ is calculated in accordance with Section 3.3.8.5 of Reference G.1, based on the dropped rod event:

$$\text{Margin} = FTSP_{L\text{-}RPS} - LTSP_{L\text{-}RPS}$$

Where:

$LTSP_{L\text{-}RPS}$ = 1830.7 psig
$FTSP_{L\text{-}RPS}$ = 1925.0 psig — Section 6.5

Substituting,

$$\text{Margin} = 1925.0 \text{ psig} - 1830.7\text{psig}$$

Margin = 94.3 psi

8.4.4 Low PZR Pressure Reactor Trip Setpoint Evaluation - EPU

Low PZR Pressure Reactor Trip – OPTOAX

For a decreasing setpoint towards the Analytical Limit, Equation 7.1.5-2 is used. As discussed in Appendix E, the containment environment is normal for the accidents analyzed under OPTOAX. Therefore, the same random and bias TLE terms used for a rod drop accident LTSP calculation in 8.4.3 above are applied to this LTSP calculation.

$$LTSP_{L\text{-}RPS\text{-}OPTOAX}\downarrow = AL_{L\text{-}RPS\text{-}OPTOAX} + [(0.839)*TLE_{L\text{-}RPS\text{-}ROD\text{-}rdm}^{+} + TLE_{L\text{-}RPS\text{-}ROD\text{-}bias}^{+}]PS$$

Where:

$AL_{L\text{-}RPS\text{-}OPTOAX}$	= 1840 psig	Section 6.5
$TLE_{L\text{-}RPS\text{-}ROD\text{-}rdm}^{+}$	= + 2.334 % span	Section 8.3.2
$TLE_{L\text{-}RPS\text{-}ROD\text{-}bias}^{+}$	= + 0.000 % span	Section 8.3.2
PS	= 800 psi	Section 6.9

Substituting,

$$TLE_{L\text{-}RPS\text{-}ROD\text{-}total} = (0.839 * 2.334\% + 0.000\%) = 1.958\ \%\ \text{span}$$

$$LTSP_{L\text{-}RPS\text{-}OPTOAX} = 1840\ \text{psig} + \frac{1.958\% * 800\text{psi}}{100\%}$$

$$LTSP_{L\text{-}RPS\text{-}OPTOAX} = \mathbf{1855.7\ psig} \qquad \textbf{(95/95)}$$

The LTSP for the Low PZR Pressure Reactor Trip for Extended Power Uprate is the LTSP calculated above. Therefore,

$$\mathbf{LTSP_{L\text{-}RPS} = 1855.7\ psig}$$

From Section 6.5, the Field Trip Setpoint ($FTSP_{L\text{-}RPS}$) for Low PZR Pressure Reactor Trip is 1925.0 psig. The $FTSP_{L\text{-}RPS}$ is greater than the calculated $LTSP_{L\text{-}RPS}$. Per Section 2.1, the $FTSP_{L\text{-}RPS}$ is conservative and is acceptable.

Margin-to-Trip Evaluation

Per Attachment E, the Margin-to-Trip should remain below the peak process parameter of 2136 psia under normal operating conditions. The loop uncertainty for normal environmental conditions is for the dropped rod case. Using Equation 7.4-2,

$$\text{Margin-to-Trip} = FTSP + (TLE*PS)$$

$$= 1925\ \text{psig} + \frac{1.958\% * 800\text{psi}}{100\%}$$

$$= 1940.7\ \text{psig or } 1955.4\ \text{psia}$$

Therefore, since the Margin-to-Trip (1955.4 psia) is less than the Peak Process Parameter (2136 psia), the Field Trip Setpoint ($FTSP_{L\text{-}RPS}$) is acceptable.

The worst-case margin between $LTSP_{L\text{-}RPS}$ and $FTSP_{L\text{-}RPS}$ is calculated in accordance with Section 3.3.8.5 of Reference G.1, based on the dropped rod event:

$$\text{Margin} = FTSP_{L\text{-}RPS} - LTSP_{L\text{-}RPS}$$

Where:

$LTSP_{L\text{-}RPS}$ = 1855.7 psig
$FTSP_{L\text{-}RPS}$ = 1925.0 psig — Section 6.5

Substituting,

$$\text{Margin} = 1925.0\ \text{psig} - 1855.7\text{psig}$$

$$\mathbf{Margin = 69.3\ psi}$$

8.4.5 Low PZR Pressure SI Actuation Setpoint Evaluation

For a decreasing setpoint towards the Analytical Limit, Equation 7.1.5-2 is used.

$$LTSP_{L\text{-}SI}\downarrow = AL_{L\text{-}SI} + [(0.839)*TLE_{L\text{-}SI\text{-}rdm}^{+} + TLE_{L\text{-}SI\text{-}bias}^{+}]PS$$

Where:

$AL_{L\text{-}SI}$	= 1625 psig or 1648 psig	Section 6.5
$TLE_{L\text{-}SI\text{-}rdm}^{+}$	= + 3.406 % span	Section 8.3.4
$TLE_{L\text{-}SI\text{-}bias}^{+}$	= + 0.000 % span	Section 8.3.4
PS	= 800 psi	Section 6.9

Per Section 6.7.3, the SI Actuation analytical limit is lower than the lower span limit of the transmitter and should be replaced in the setpoint evaluation by the lower span limit.

$$LTSP_{L\text{-}SI}\downarrow = 1700\text{psig} + \frac{(0.839*3.406\% + 0.000\%)*800\text{psi}}{100\%}$$

$$\mathbf{LTSP_{L\text{-}SI}\downarrow = 1722.9\ psig} \qquad \textbf{(95/95)}$$

From Section 6.5, the Field Trip Setpoint ($FTSP_{L\text{-}SI}$) for Low PZR Pressure SI Actuation is 1735.0 psig. The $FTSP_{L\text{-}SI}$ is greater than the calculated $LTSP_{L\text{-}SI}$. Per Section 2.1, the $FTSP_{L\text{-}SI}$ is conservative and is acceptable.

Per Attachment E and Section 2.3, the Low PZR Pressure SI Actuation FTSP must be no lower than 1715 psig. The FTSP is 1735.0 psig, which is greater than 1715 psig, and therefore, acceptable.

The worst-case margin between $LTSP_{L\text{-}SI}$ and $FTSP_{L\text{-}SI}$ is calculated in accordance with Section 3.3.8.5 of Reference G.1:

$$\text{Margin} = FTSP_{L\text{-}SI} - LTSP_{L\text{-}SI}$$

Where:

$LTSP_{L\text{-}SI}$	= 1722.9 psig	
$FTSP_{L\text{-}SI}$	= 1735.0 psig	Section 6.5

Substituting,

$$\text{Margin} = 1735.0\ \text{psig} - 1722.9\ \text{psig}$$

$$\mathbf{Margin = 12.1\ psi}$$

8.4.6 PZR Pressure SI Unblock Setpoint Evaluation (Proposed Setpoint)

Per Section 6.7.4, the SI Block permissive reset (Unblock) FTSP should be revised to be set at 2000 psig. Therefore,

$$\mathbf{FTSP_{SI\text{-}UNB} = 2000\ psig}$$

The current SI Unblock setpoint of 1775 psig is a nominal value based on an RCS operating pressure of 2000 psia, which is no longer applicable. Per Section 6.7.4, no formal uncertainty calculation of this nominal setpoint is necessary.

8.4.7 PZR Pressure SI Block Setpoint Evaluation (Proposed Setpoint)

Per Section 6.7.4, the SI Block permissive FTSP should be set above 1950 psig. PBNP employs a 10-psi difference between the SI Block and Unblock setpoints. This difference between the setpoints is considered acceptable by PBNP and should be retained because this helps prevent spurious operations of the bistable. Therefore, the SI Block setpoint is established at 10 psi less than the SI Unblock setpoint:

$$FTSP_{SI\text{-}B} = FTSP_{SI\text{-}UNB} - 10 \text{ psi}$$
$$FTSP_{SI\text{-}B} = 2000 \text{ psig} - 10 \text{ psi}$$
$$\mathbf{FTSP_{SI\text{-}B} = 1990 \text{ psig}}$$

8.5 Operability Limit Determination

This section determines Operability Limits for each RPS and ESFAS pressurizer pressure protective function. Operability Limits are established for the as-found value of the trip bistable during the Tech Spec Channel Operational Test (COT) surveillance, to determine if the bistable is operating within its 3-sigma drift limits. Two Operability Limits are determined for each trip function, one on each side of the FTSP.

Per Section 7.1.6, the OL on each side of the FTSP is calculated by applying the square-root-sum-of-the-squares combination of As-Left tolerance and 3σ drift to the FTSP.

8.5.1 High PZR Pressure Reactor Trip Operability Limit

Using Equation 7.1.6-3 to determine the bistable 3σ drift value,

$Rd_{3\sigma} = (1.5)\ Rd_{2\sigma}$ (Eq. 7.1.6-3)
$Rd_{3\sigma} = (1.5)\ 0.222\ \%$ span ($Rd_{2\sigma}$ from Section 8.1.13)
$Rd_{3\sigma} = \pm\ 0.333\ \%$ span

The FTSP for the high pressurizer pressure trip of 2365 psig (Section 6.5), expressed as percent span, is:

$FTSP = ([2365 - 1700] \div 800) * 100 = 83.13\ \%$ span

Using Equation 7.1.6-1, the OL^+ is determined as:

$OL^+ = FTSP + [RAL^2 + Rd_{3\sigma}^2]^{1/2}$ (Eq. 7.1.6-1)
$OL^+ = 83.13\ \% + (0.500^2 + 0.333^2)^{1/2}$ (RAL is B_v from Section 8.1.15)
$OL^+ = 83.13\ \% + 0.60$
$OL^+ = 83.73\ \%$ span

Expressed in psig, $OL^+ = (0.837 * 800) + 1700 =$ **2370 psig**

Using Equation 7.1.6-2, the OL^- is determined as:

$OL^- = FTSP - [RAL^2 + Rd_{3\sigma}^2]^{1/2}$ (Eq. 7.1.6-2)
$OL^- = 83.13\ \% - (0.500^2 + 0.333^2)^{1/2}$
$OL^- = 83.13\ \% - 0.60$
$OL^- = 82.53\ \%$ span

Expressed in psig, $OL^- = (0.825 * 800) + 1700 =$ **2360 psig**

Because the High Pressurizer Pressure Reactor Trip is an increasing trip, the positive OL^+ value of 2370 psig should be the limit compared to the COT as-found value to determine Technical Specification operability of the channel. However, an as-found value found outside either the OL^+ or OL^- indicates that the channel is operating abnormally.

From Section 8.4.1, the Limiting Trip Setpoint for the high Pressurizer Pressure Reactor Trip is 2387.7 psig. For this increasing trip, the OL^+ value of 2370 psig

is more conservative (i.e., restrictive) than the LTSP. Per Section 2.4, the OL^+ value is acceptable to use for channel operability determination during COT.

8.5.2 Low PZR Pressure Reactor Trip Operability Limit

Using Equation 7.1.6-3 to determine the bistable 3σ drift value,

$Rd_{3\sigma} = (1.5)\ Rd_{2\sigma}$ (Eq. 7.1.6-3)
$Rd_{3\sigma} = (1.5)\ 0.222$ % span ($Rd_{2\sigma}$ from Section 8.1.13)
$Rd_{3\sigma} = \pm 0.333$ % span

The FTSP for the low pressurizer pressure reactor trip of 1925 psig (Section 6.5), expressed as percent span, is:

FTSP = ([1925 – 1700] ÷ 800) * 100 = 28.13 % span

Using Equation 7.1.6-1, the OL^+ is determined as:

$OL^+ = FTSP + [RAL^2 + Rd_{3\sigma}^2]^{1/2}$ (Eq. 7.1.6-1)
$OL^+ = 28.13\ \% + (0.500^2 + 0.333^2)^{1/2}$ (RAL is B_v from Section 8.1.15)
$OL^+ = 28.13\ \% + 0.60$
$OL^+ = 28.73$ % span

Expressed in psig, OL^+ = (0.287 * 800) + 1700 = **1930 psig**

Using Equation 7.1.6-2, the OL^- is determined as:

$OL^- = FTSP - [RAL^2 + Rd_{3\sigma}^2]^{1/2}$ (Eq. 7.1.6-2)
$OL^- = 28.13\ \% - (0.500^2 + 0.333^2)^{1/2}$
$OL^- = 28.13\ \% - 0.60$
$OL^- = 27.53$ % span

Expressed in psig, OL^- = (0.275 * 800) + 1700 = **1920 psig**

Because the Low Pressurizer Pressure Reactor Trip is a decreasing trip, the negative OL^- value of 1920 psig should be the limit compared to the COT as-found value to determine Technical Specification operability of the channel. However, an as-found value found outside either the OL^+ or OL^- indicates that the channel is operating abnormally.

From Section 8.4.2, the Limiting Trip Setpoint for the low Pressurizer Pressure Reactor Trip is 1855.7 psig. For this decreasing trip, the OL^- value of 1920 psig is more conservative (i.e., restrictive) than the LTSP. Per Section 2.4, the OL^- value is acceptable to use for channel operability determination during COT.

8.5.3 Low PZR Pressure SI Actuation Operability Limit

Using Equation 7.1.6-3 to determine the bistable 3σ drift value,

$Rd_{3\sigma} = (1.5)\ Rd_{2\sigma}$ (Eq. 7.1.6-3)
$Rd_{3\sigma} = (1.5)\ 0.222\ \%$ span ($Rd_{2\sigma}$ from Section 8.1.13)
$Rd_{3\sigma} = \pm\ 0.333\ \%$ span

The FTSP for the low pressurizer pressure SI Actuation of 1735 psig (Section 6.5), expressed as percent span, is:

$FTSP = ([1735 - 1700] \div 800) * 100 = 4.38\ \%$ span

Using Equation 7.1.6-1, the OL^+ is determined as:

$OL^+ = FTSP + [RAL^2 + Rd_{3\sigma}^2]^{1/2}$ (Eq. 7.1.6-1)
$OL^+ = 4.38\ \% + (0.500^2 + 0.333^2)^{1/2}$ (RAL is B_v from Section 8.1.15)
$OL^+ = 4.38\ \% + 0.60$
$OL^+ = 4.98\ \%$ span

Expressed in psig, $OL^+ = (0.05 * 800) + 1700 =$ **1740 psig**

Using Equation 7.1.6-2, the OL^- is determined as:

$OL^- = FTSP - [RAL^2 + Rd_{3\sigma}^2]^{1/2}$ (Eq. 7.1.6-2)
$OL^- = 4.38\ \% - (0.500^2 + 0.333^2)^{1/2}$
$OL^- = 4.38\ \% - 0.60$
$OL^- = 3.78\ \%$ span

Expressed in psig, $OL^- = (0.038 * 800) + 1700 =$ **1730 psig**

Because the Low Pressurizer Pressure SI Actuation Trip is a decreasing trip, the negative OL^- value of 1730 psig should be the limit compared to the COT as-found value to determine Technical Specification operability of the channel. However, an as-found value found outside either the OL^+ or OL^- indicates that the channel is operating abnormally.

From Section 8.4.3, the Limiting Trip Setpoint for the low Pressurizer Pressure SI Actuation is 1722.9 psig. For this decreasing trip, the OL^- value of 1730 psig is more conservative (i.e., restrictive) than the LTSP. Per Section 2.4, the OL^- value is acceptable to use for channel operability determination during COT.

8.5.4 PZR Pressure SI Unblock Operability Limit (Existing)

Operability Limits are determined for the SI Unblock function because the unblock function is the safety function for the bistable (automatically restoring the SI actuation function on increasing pressure). Separate OLs for the block function are not necessary for Technical Specification compliance because the block enable function on decreasing pressure is not safety-related.

Using Equation 7.1.6-3 to determine the bistable 3σ drift value,

$Rd_{3\sigma} = (1.5)\ Rd_{2\sigma}$ (Eq. 7.1.6-3)
$Rd_{3\sigma} = (1.5)\ 0.222\ \%$ span (Section 8.1.13)
$Rd_{3\sigma} = \pm\ 0.333\ \%$ span

The FTSP for the SI Unblock setting of 1775 psig (Section 6.5), expressed as percent span, is:

$$FTSP = ([1775 - 1700] \div 800) * 100 = 9.38\ \%\ \text{span}$$

Using Equation 7.1.6-1, the OL^+ is determined as:

$OL^+ = FTSP + [RAL^2 + Rd_{3\sigma}{}^2]^{1/2}$ (Eq. 7.1.6-1)
$OL^+ = 9.38\ \% + (0.500^2 + 0.333^2)^{1/2}$ (RAL is B_v from Section 8.1.15)
$OL^+ = 9.38\ \% + 0.60$
$OL^+ = 9.98\ \%$ span

Expressed in psig, $OL^+ = (0.10 * 800) + 1700 =$ **1780 psig**

Using Equation 7.1.6-2, the OL^- is determined as:

$OL^- = FTSP - [RAL^2 + Rd_{3\sigma}{}^2]^{1/2}$ (Eq. 7.1.6-2)
$OL^- = 9.38\ \% - (0.500^2 + 0.333^2)^{1/2}$
$OL^- = 9.38\ \% - 0.60$
$OL^- = 8.78\ \%$ span

Expressed in psig, $OL^- = (0.088 * 800) + 1700 =$ **1770 psig**

Because the SI Unblock function occurs on an increasing signal, the positive OL^+ value of 1780 psig should be the limit compared to the COT as-found value to determine Technical Specification operability of the channel. However, an as-found value found outside either the OL^+ or OL^- indicates that the channel is operating abnormally.

The SI Unblock function does not have any LTSP for comparison to the OL values. The OL^+ and OL^- limits are both acceptable to use for channel operability determination during COT.

The existing FTSP is based on an RCS operating pressure of 2000 psia that is no longer applicable to PBNP operation. See the next section for SI Unblock OL values and a proposed FTSP change to 2000 psig to correspond to a normal RCS operating pressure of 2250 psia.

8.5.5 PZR Pressure SI Unblock Operability Limit (Proposed)

As recommended in Section 8.4.4, a new nominal FTSP of 2000 psig is proposed for the pressurizer pressure SI Unblock function. The following are proposed Operability Limits based on adjusting the SI Unblock bistable FTSP to this new value.

Using Equation 7.1.6-3 to determine the bistable 3σ drift value,

$Rd_{3\sigma} = (1.5)\ Rd_{2\sigma}$ (Eq. 7.1.6-3)
$Rd_{3\sigma} = (1.5)\ 0.222\ \%$ span (Section 8.1.13)
$Rd_{3\sigma} = \pm\ 0.333\ \%$ span

The proposed FTSP for the SI Unblock trip of 2000 psig, expressed as percent span, is:

FTSP = ([2000 – 1700] ÷ 800) * 100 = 37.5 % span

Using Equation 7.1.6-1, the OL^+ is determined as:

$OL^+ = FTSP + [RAL^2 + Rd_{3\sigma}^2]^{1/2}$ (Eq. 7.1.6-1)
$OL^+ = 37.5\ \% + (0.500^2 + 0.333^2)^{1/2}$ (RAL is B_v from Section 8.1.15)
$OL^+ = 37.5\ \% + 0.60$
$OL^+ = 38.1\ \%$ span

Expressed in psig, OL^+ = (0.381 * 800) + 1700 = **2005 psig**

Using Equation 7.1.6-2, the OL^- is determined as:

$OL^- = FTSP - [RAL^2 + Rd_{3\sigma}^2]^{1/2}$ (Eq. 7.1.6-2)
$OL^- = 37.5\ \% - (0.500^2 + 0.333^2)^{1/2}$
$OL^- = 37.5\ \% - 0.60$
$OL^- = 36.9\ \%$ span

Expressed in psig, OL^- = (0.369 * 800) + 1700 = **1995 psig**

Because the SI Unblock function is the safety function (the SI Block Enable function from the same bistable is not a safety function) and SI Unblock occurs on an increasing signal, the proposed OL^+ value of 2005 psig should be the limit compared to the COT as-found value to determine Technical Specification operability of the channel. However, an as-found value found outside either the OL^+ or OL^- indicates that the channel is operating abnormally.

The SI Unblock function does not have an LTSP for comparison to the OL values. The proposed OL^+ and OL^- limits are both acceptable to use for channel operability determination during COT after the FTSP is changed by license amendment (see Section 9.2).

8.6 Acceptable As-Left and As-Found Calibration Tolerances

8.6.1 Acceptable As-Left Calibration Tolerances

Per Section 3.3.8.6 of Reference G.1, the As-Left Tolerance is determined using the equations shown in Section 7.1.4 of this calculation.

References P.2 through P.5 and P.7 through P.14 show that each device analyzed in this calculation is calibrated separately. Therefore, the As-Left Tolerance for each device is calculated independently. The tolerances are calculated with the 95/95 uncertainty values.

8.6.1.1 Sensor As-Left Tolerances (SAL)

Using Equation 7.1.4-1, the Acceptable As-Left Tolerance for the Sensor (transmitter) is:

SAL = ± Sv
SAL = ± 0.500 % span Section 8.1.4

Converting to mAdc and rounding to procedure precision:

SAL = ± 0.5 % span * (40 mAdc / 100 %)

SAL = ± 0.20 mAdc

8.6.1.2 Bistable As-Left Tolerances (BAL)

Using Equation 7.1.4-2, the Acceptable As-Left Tolerance for the Bistable is:

BAL = ± Bv
BAL = ± 0.500 % span Section 8.1.15

Converting to Vdc (Section 6.8) and rounding to procedure precision:

BAL = ± 0.5 % span * (40 mAdc / 100 %) * (10 Ω / 1000 mAdc/A)

BAL = ± 0.002 Vdc

Converting to process units (Section 6.8) and rounding to procedure precision:

BAL = ± 0.5 % span * (800 psi / 100 %)

BAL = ± 4.0 psig

8.6.1.3 Current-to-Current Converter As-Left Tolerances (I/IAL)

Using Equation 7.1.4-3, the Acceptable As-Left Tolerance for the I/I Converter is:

I/IAL = ± I/Iv
I/IAL = ± 0.250 % span Section 8.1.33

Converting to mAdc and rounding to procedure precision,

I/IAL = ± 0.250 % span * (40 mAdc / 100 %)

I/IAL = ± 0.10 mAdc

8.6.1.4 Lead/Lag Module As-Left Tolerances (LLAL)

Using Equation 7.1.4-4, the Acceptable As-Left Tolerance for the Lead/Lag Module is:

LLAL = ± LLv
LLAL = ± 0.500 % span Section 8.1.24

Converting to Vdc (Section 6.8) and rounding to procedure precision:

LLAL = ± 0.500 % span * (40 mAdc / 100 %) * (10 Ω / 1000 mAdc/A)

LLAL = ± 0.002 Vdc

8.6.1.5 Indicator As-Left Tolerances (IAL)

Using Equation 7.1.4-5, the Acceptable As-Left Tolerance for the Indicator is:

IAL = ± Iv
IAL = ± 2.000 % span Section 8.1.42

Converting to mAdc and rounding to procedure precision:

IAL = ± 2.000 % span * (40 mAdc / 100 %)

IAL = ± 0.80 mAdc

8.6.2 Acceptable As-Found Calibration Tolerances

Per Section 3.3.8.6 of Reference G.1, the As-Found Tolerance is determined using the equations shown in Section 7.1.3 of this calculation.

Per References P.2 through P.5 and P.7 through P.14 each device analyzed in this calculation is calibrated separately. Therefore, the As-Found Tolerance for each device is calculated independently. The tolerances are calculated with the 95/95 uncertainty values.

8.6.2.1 Sensor As-Found Tolerance (SAF)

Using Equation 7.1.3-1, the Acceptable As-Found Tolerance for the Sensor (transmitter) is:

$$SAF = \pm \sqrt{Sv^2 + Sd^2 + Sm^2}$$

where:

Sv	= ± 0.500 % span	Section 8.1.4
Sd	= ± 0.844 % span	Section 8.1.2
Sm	= ± 0.000 % span	Section 8.1.3

$$SAF = \pm \sqrt{0.500^2 + 0.844^2 + 0.000^2}$$

SAF = ± 0.981 % span

Converting to mAdc and rounding to procedure precision:

SAF = ± 0.981 % span * (40 mAdc / 100 %)

SAF = ± 0.39 mAdc

8.6.2.2 Bistable As-Found Tolerance (BAF)

Using Equation 7.1.3-2, the Acceptable As-Found Tolerance for the Bistable is:

$$BAF = \pm \sqrt{Bv^2 + Bd^2 + Bm^2}$$

where:

Bv	= ± 0.500 % span	Section 8.1.15
Bd	= ± 0.222 % span	Section 8.1.13
Bm	= ± 0.000 % span	Section 8.1.14

$$BAF = \pm \sqrt{0.500^2 + 0.222^2 + 0^2} + 0$$

BAF = ± 0.547 % span

Converting to Vdc (Section 6.8) and rounding to procedure precision:

BAF = ± 0.547 % span * (40 mAdc / 100 %) * (10 Ω / 1000 mAdc/A)

BAF = ± 0.0022 Vdc

Converting to process units (Section 6.8) and rounding to procedure precision:

BAF = ± 0.547 % span * (800 psi / 100 %)

BAF = ± 4.4 psig

8.6.2.3 Current-to-Current Converter As-Found Tolerance (I/IAF)

Using Equation 7.1.3-3, the Acceptable As-Found Tolerance for the I/I Converter is:

$$I/IAF = \pm \sqrt{I/Iv^2 + I/Id^2 + I/Im^2}$$

where:

I/Iv	= ± 0.250 % span	Section 8.1.33
I/Id	= ± 0.500 % span	Section 8.1.31
I/Im	= ± 0.099 % span	Section 8.1.32

$$I/IAF = \pm \sqrt{0.250^2 + 0.500^2 + 0.099^2}$$

I/IAF = ± 0.568 % span

Converting to mAdc and rounding to procedure precision

I/IAF = ± 0.568 % span * (40 mAdc / 100 %))

I/IAF = ± 0.23 mAdc

8.6.2.4 Lead/Lag Module As-Found Tolerance (LLAF)

Using Equation 7.1.3-4, the Acceptable As-Found Tolerance for the Lead/Lag Module is:

$$LLAF = \pm \sqrt{LLv^2 + LLd^2 + LLm^2}$$

where:

LLv	= ± 0.500 % span	Section 8.1.24
LLd	= ± 0.500 % span	Section 8.1.22
LLm	= ± 0.083 % span	Section 8.1.23

$$LLAF = \pm \sqrt{0.500^2 + 0.500^2 + 0.083^2}$$

LLAF = ± 0.712 % span

Converting to Vdc (Section 6.8) and rounding to procedure precision:

LLAF = ± 0.712 % span * (40 mAdc / 100 %) * (10 Ω / 1000 mAdc/A)

LLAF = ± 0.0028 Vdc

8.6.2.5 Indicator As-Found Tolerance (IAF)

Using Equation 7.1.3-5, the Acceptable As-Found Tolerance for the Indicator is:

$$IAF = \pm \sqrt{Iv^2 + Id^2 + Im^2}$$

where:

Iv	= ± 2.000 % span	Section 8.1.42
Id	= ± 1.028 % span	Section 8.1.40
Im	= ± 0.000 % span	Section 8.1.41

$$IAF = \pm \sqrt{2.000^2 + 1.028^2 + 0^2}$$

IAF = ± 2.249 % span

Converting to mAdc and rounding to procedure precision:

IAF = ± 2.249 % span * (40 mAdc / 100 %)

IAF = ± 0.90 mAdc

8.7 Channel Check Tolerances

Using Equation 7.1.7-1, the Channel Check Tolerance is determined as follows (at a 95/95 value):

$$CCT = \pm \sqrt{\begin{array}{l}(Sa^2 + I/Ia^2 + Ia^2 + Sd^2 + I/Id^2 + Id^2 + Sv^2 + I/Iv^2 \\ + Iv^2 + Irea^2)_{ind\,a} + (Sa^2 + I/Ia^2 + Ia^2 + Sd^2 + I/Id^2 + Id^2 \\ + Sv^2 + I/Iv^2 + Iv^2 + Irea^2)_{ind\,b}\end{array}}$$

where:

Sa	= ± 0.000 % span	Section 8.1.1
Sd	= ± 0.844 % span	Section 8.1.2
Sv	= ± 0.500 % span	Section 8.1.4
I/Ia	= ± 0.500 % span	Section 8.1.30
I/Id	= ± 0.500 % span	Section 8.1.31
I/Iv	= ± 0.250 % span	Section 8.1.33
Ia	= ± 0.000 % span	Section 8.1.39
Id	= ± 1.028 % span	Section 8.1.40
Iv	= ± 2.000 % span	Section 8.1.42
Irea	= ± 0.000 % span	Section 8.1.48

Substituting to calculate a 95/95 value:

$$CCT = \pm \sqrt{\begin{array}{l}(0^2 + 0.500^2 + 0^2 + 0.844^2 + 0.500^2 + 1.028^2 + 0.500^2 + 0.250^2 \\ + 2.000^2 + 0^2)_{ind\,a} + (0^2 + 0.500^2 + 0^2 + 0.844^2 + 0.500^2 + 1.028^2 \\ + 0.500^2 + 0.250^2 + 2.000^2 + 0^2)_{ind\,b}\end{array}}$$

CCT = ± 3.628 % span **(95/95)**

Converting to process units using the calibrated span of 800 psi (Section 6.8),

CCT = ± (3.628 % span * 800 psi) / 100 %

CCT = ± 29.024 psi **(95/95)**

Per Reference G.44, the Control Room indication for PZR Pressure (PI-429, PI-430, PI-431 and PI-449A) has a minor division of 20 psi. Per Section 7.1.C, the CCT value should be rounded to the precision that is readable on the associated loop indicator. Per Section 3.3.5.3 of Reference G.1, the readability of these indicators is ± ½ the smallest division (or 10 psi). Therefore, the CCT value is rounded up to the nearest 10 psi interval.

CCT = ± 30.0 psi **(95/95)**

The CCT is used by the operator in the periodic surveillance of the PZR Pressure per References G.31 and G.32. From References G.31 and G.32, the existing CCT for PZR Pressure is ± 30 psi. The existing CCT is equal to the calculated CCT. Per Section 2.0, the existing CCT is acceptable and may be retained.

8.8 Scaling

From Section 6.9, the PZR Pressure loop is calibrated to measure a pressure input of 1700 to 2500 psig corresponding to an output of 10 to 50 mAdc.

Using Equation 7.1.8-2,

$$m = (y_2 - y_1) / (x_2 - x_1)$$

Where:

x_1 = 1700 psig
x_2 = 2500 psig
y_1 = 10 mAdc
y_2 = 50 mAdc

Substituting,

m = (50 mAdc - 10 mAdc) / (2500 psig - 1700 psig)
m = 40 mAdc/ 800 psi

8.8.1 High PZR Pressure Reactor Trip FTSP and Operability Limits

Solving for the equivalent signal in mAdc corresponding to the FTSP of 2365 psig (Section 6.5) using Equation 7.1.8-3,

$$y = m * (x - x_1) + y_1$$

where:

x = 2365 psig
x_1 = 1700 psig
y = FTSP (in mAdc)
y_1 = 10 mAdc

Substituting,

y = [(40 mAdc/ 800 psi) * (2365 psig – 1700 psig)] + 10 mAdc

y = 43.25 mAdc

Converting to Vdc due to a 10-Ω resistor across the calibration point (Ref. D.6 through D.13)

y = 43.25 mAdc * 10 Ω / 1000 mVdc per Vdc

y = 0.4325 Vdc

For an OL^+ of 2370 psig (Section 8.5.1), the equivalent equation is:

y = [(40 mAdc/ 800 psi) * (2370 psig – 1700 psig)] + 10 mAdc

y = 43.50 mAdc

Converting to Vdc :

y = 43.5 mAdc * 10 Ω / 1000 mVdc per Vdc

y = 0.4350 Vdc

For an OL^- of 2360 psig (Section 8.5.1), the equivalent equation is:

y = [(40 mAdc/ 800 psi) * (2360 psig – 1700 psig)] + 10 mAdc

y = 43.00 mAdc

Converting to Vdc :

y = 43.00 mAdc * 10 Ω / 1000 mVdc per Vdc

y = 0.4300 Vdc

Table 8.8-1
1(2) PC-429A, 430A, 431A – High PZR Pressure Bistable Calibration – Reactor Trip

Function	Input (psig)	Output (mAdc)	Output (Vdc)
OL^+	2370	43.50	0.4350
FTSP↑	2365	43.25	0.4325
OL^-	2360	43.00	0.4300

8.8.2 Low PZR Pressure Reactor Trip FTSP and Operability Limits

Solving for the equivalent signal in mAdc corresponding to the FTSP of 1925 psig (Section 6.5) using Equation 7.1.8-3,

$$y = m * (x - x_1) + y_1$$

where:

x = 1925 psig
x_1 = 1700 psig
y = FTSP (in mAdc)
y_1 = 10 mAdc

Substituting,

y = [(40 mAdc/ 800 psi) * (1925 psig – 1700 psig)] + 10 mAdc

y = 21.25 mAdc

Converting to Vdc due to a 10-Ω resistor across the calibration point (Ref. D.6 through D.13)

y = 21.25 mAdc * 10 Ω / 1000 mVdc per Vdc

y = 0.2125 Vdc

For an OL^+ of 1930 psig (Section 8.5.2), the equivalent equation is:

y = [(40 mAdc/ 800 psi) * (1930 psig – 1700 psig)] + 10 mAdc

y = 21.50 mAdc

Converting to Vdc :

y = 21.5 mAdc * 10 Ω / 1000 mVdc per Vdc

y = 0.2150 Vdc

For an OL^- of 1920 psig (Section 8.5.2), the equivalent equation is:

y = [(40 mAdc/ 800 psi) * (1920 psig – 1700 psig)] + 10 mAdc

y = 21.00 mAdc

Converting to Vdc :

y = 21.00 mAdc * 10 Ω / 1000 mVdc per Vdc

y = 0.2100 Vdc

Table 8.8-2
1(2) PC-429E, 430H, 431J, 449A – Low PZR Pressure Bistable Calibration – Reactor Trip

Function	Input (psig)	Output (mAdc)	Output (Vdc)
OL^+	1930	21.50	0.2150
FTSP↓	1925	21.25	0.2125
OL^-	1920	21.00	0.2100

8.8.3 Low PZR Pressure SI Actuation FTSP and Operability Limits

Solving for the equivalent signal in mAdc corresponding to the FTSP of 1735 psig (Section 6.5) using Equation 7.1.8-3,

$$y = m * (x - x_1) + y_1$$

where:

x = 1735 psig
x_1 = 1700 psig
y = FTSP (in mAdc)
y_1 = 10 mAdc

Substituting,

y = [(40 mAdc/ 800 psi) * (1735 psig – 1700 psig)] + 10 mAdc

y = 11.75 mAdc

Converting to Vdc due to a 10-Ω resistor across the calibration point (Ref. D.6 through D.13)

y = 11.75 mAdc * 10 Ω / 1000 mVdc per Vdc

y = 0.1175 Vdc

For an OL^+ of 1740 psig (Section 8.5.3), the equivalent equation is:

y = [(40 mAdc/ 800 psi) * (1740 psig – 1700 psig)] + 10 mAdc

y = 12.00 mAdc

Converting to Vdc :

y = 12.00 mAdc * 10 Ω / 1000 mVdc per Vdc

y = 0.1200 Vdc

For an OL^- of 1730 psig (Section 8.5.3), the equivalent equation is:

y = [(40 mAdc/ 800 psi) * (1730 psig – 1700 psig)] + 10 mAdc

y = 11.50 mAdc

Converting to Vdc :

y = 11.50 mAdc * 10 Ω / 1000 mVdc per Vdc

y = 0.1150 Vdc

Table 8.8-3
1(2) PC-429C, 430E, 431G – Low PZR Pressure Bistable Calibration – SI Actuation

Function	Input (psig)	Output (mAdc)	Output (Vdc)
OL^+	1740	12.00	0.1200
FTSP↓	1735	11.75	0.1175
OL^-	1730	11.50	0.1150

8.8.4 PZR Pressure SI Unblock FTSP and Operability Limits (Existing)

For the existing SI Unblock nominal FTSP of 1775 psig (Section 6.5), using Equation 7.1.8-3,

$$y = m * (x - x_1) + y_1$$

where:

x = 1775 psig — Section 8.5.1
x_1 = 1700 psig
y = FTSP (in mAdc)
y_1 = 10 mAdc

Substituting,

y = [(40 mAdc/ 800 psi) * (1775 psig – 1700 psig)] + 10 mAdc

y = 13.75 mAdc

Converting to Vdc due to a 10-Ω resistor across the calibration point (Ref. D.6 through D.13)

y = 13.75 mAdc * 10 Ω / 1000 mVdc per Vdc

y = 0.1375 Vdc

For an OL^+ of 1780 psig (Section 8.5.4), the equivalent equation is:

y = [(40 mAdc/ 800 psi) * (1780 psig – 1700 psig)] + 10 mAdc

y = 14.0 mAdc

Converting to Vdc :

y = 14.0 mAdc * 10 Ω / 1000 mVdc per Vdc

y = 0.1400 Vdc

For an OL^- of 1770 psig (Section 8.5.4), the equivalent equation is:

y = [(40 mAdc/ 800 psi) * (1770 psig – 1700 psig)] + 10 mAdc

y = 13.5 mAdc

Converting to Vdc :

y = 13.5 mAdc * 10 Ω / 1000 mVdc per Vdc

y = 0.1350 Vdc

Table 8.8-4
1(2) PC-429D, 430F, 431I – PZR Pressure Bistable Calibration – SI Unblock (existing)

Function	Input (psig)	Output (mAdc)	Output (Vdc)
OL^+	1780	14.00	0.1400
FTSP↑	1775	13.75	0.1375
OL^-	1770	13.50	0.1350

8.8.5 PZR Pressure SI Block Enable FTSP (Existing)

Solving for the equivalent signal in mAdc corresponding to the existing SI Block Enable FTSP of 1765 psig (Section 6.5) using Equation 7.1.8-3,

$$y = m * (x - x_1) + y_1$$

where:

x = 1765 psig
x_1 = 1700 psig
y = Setpoint (mAdc)
y_1 = 10 mAdc

Substituting,

y = [(40 mAdc/ 800 psi) * (1765 psig – 1700 psig)] + 10 mAdc

y = **13.25 mAdc**

Converting to Vdc due to a 10-Ω resistor across the calibration point (Ref. D.6 through D.13)

y = 13.25 mAdc * 10 Ω / 1000 mVdc per Vdc

y = **0.1325 Vdc**

Table 8.8-5
1(2) PC-429D, 430F, 431I – PZR Pressure Bistable Calibration – SI Block Enable (existing)

Function	Input (psig)	Output (mAdc)	Output (Vdc)
FTSP↓	1765	13.25	0.1325

8.8.6 PZR Pressure SI Unblock FTSP and Operability Limits (Proposed)

Solving for the equivalent signal in mAdc corresponding to the proposed FTSP of 2000 psig (Section 8.4.4) using Equation 7.1.8-3,

$$y = m * (x - x_1) + y_1$$

where:

x = 2000 psig
x_1 = 1700 psig
y = FTSP (in mAdc)
y_1 = 10 mAdc

Substituting,

y = [(40 mAdc/ 800 psi) * (2000 psig – 1700 psig)] + 10 mAdc

y = **25.0 mAdc**

Converting to Vdc due to a 10-Ω resistor across the calibration point (Ref. D.6 through D.13)

y = 25.0 mAdc * 10 Ω / 1000 mVdc per Vdc

y = **0.250 Vdc**

For an OL^+ of 2005 psig (Section 8.5.5), the equivalent equation is:

y = [(40 mAdc/ 800 psi) * (2005 psig – 1700 psig)] + 10 mAdc

y = **25.25 mAdc**

Converting to Vdc :

y = 25.25 mAdc * 10 Ω / 1000 mVdc per Vdc

y = **0.2525 Vdc**

For an OL^- of 1995 psig (Section 8.5.5), the equivalent equation is:

y = [(40 mAdc/ 800 psi) * (1995 psig – 1700 psig)] + 10 mAdc

y = 24.75 mAdc

Converting to Vdc :

y = 24.75 mAdc * 10 Ω / 1000 mVdc per Vdc

y = 0.2475 Vdc

Table 8.8-6
1(2) PC-429D, 430F, 431I – PZR Pressure Bistable Calibration – SI Unblock (proposed)

Function	Input (psig)	Output (mAdc)	Output (Vdc)
OL^+	2005	25.25	0.2525
FTSP↑	2000	25.00	0.2500
OL^-	1995	24.75	0.2475

8.8.7 PZR Pressure SI Block Enable FTSP (Proposed)

Solving for the equivalent signal in mAdc corresponding to the proposed SI Block Enable FTSP of 1990 psig (Section 8.4.5) using Equation 7.1.8-3,

$$y = m * (x - x_1) + y_1$$

where:

x = 1990 psig
x_1 = 1700 psig
y = Setpoint (mAdc)
y_1 = 10 mAdc

Substituting,

y = [(40 mAdc/ 800 psi) * (1990 psig – 1700 psig)] + 10 mAdc

y = 24.50 mAdc

Converting to Vdc due to a 10-Ω resistor across the calibration point (Ref. D.6 through D.13)

y = 24.50 mAdc * 10 Ω / 1000 mVdc per Vdc

y = 0.2450 Vdc

Table 8.8-7
1(2) PC-429D, 430F, 431I – PZR Pressure Bistable Calibration – SI Block Enable (proposed)

Function	Input (psig)	Output (mAdc)	Output (Vdc)
FTSP↓	1990	24.50	0.2450

9.0 RESULTS AND CONCLUSIONS, WITH LIMITATIONS

9.1 Analytical Limits (AL)

The applicable Analytical Limits for the primary trip functions are discussed in Attachment E. The most restrictive Analytical Limits used for determining the Limiting Trip Setpoints are summarized below:

Table 9.1-1 Most Restrictive Analytical Limits

Function	Analytical Limit Current Power Level	Analytical Limit Extended Power Uprate	Reference
Low PZR Pressure Reactor Trip	**Dropped Rod – 1830 psia (1815 psig)***	**OTPOAX – 1855 psia (1840 psig)**	**Attachment E Section 6.7.1**
High PZR Pressure Reactor Trip	**Loss of Load – 2425 psia (2410 psig)**	**Loss of Load – 2418 psia (2403 psig)**	**Attachment E Section 6.7.2**
Low PZR Pressure SI Actuation	**1700 psig****	**1700 psig****	**Section 6.7.3**

* The Low PZR Pressure Reactor Trip has multiple Analytical Limits – see Table 6.5-1. Only the most limiting AL is shown above, as determined in Section 8.4.2.

** The Low PZR Pressure SI Actuation has multiple Analytical Limits – see Table 6.5-1. The transmitter lower range limit of 1700 psig is more restrictive than any of the Analytical Limits, per Section 6.7.3.

9.2 Limiting Trip Setpoints, Operability Limits (OL), and Recommended Tech Spec Changes

AR 896611 determined that the Technical Specification Allowable Values for several protection system functions in TS 3.3.1 (RPS) and TS 3.3.2 (ESFAS) were non-conservative. As a result, the I&C calibration procedures were revised to install temporary administrative limits (termed Allowable Limits in the ICPs) on the trip bistable as-found values until a license amendment is approved to revise the TS sections.

The Limiting Trip Setpoints for primary trip functions determined in this calculation provide new Technical Specification limits (Allowable Values) for channel operability to protect the accident analyses Analytical Limits. The LTSPs also satisfy the definition of a Limiting Safety System Setting in 10CFR50.36. Backup trips and permissives do not have a LTSP that can be used as an Allowable Value in Technical Specifications because there is no analytical limit to "anchor" the LTSP. Therefore, it is recommended that the LTSPs for the primary trip functions be included in a license amendment to revise RPS TS Table 3.3.1-1 and ESFAS TS Table 3.3.2-1 Allowable Values.

To make the Technical Specification Allowable Values easier to remember, it is recommended that the LTSP values be rounded (in the conservative direction) to the nearest 5 psig. For example, the LTSP for the high pressurizer pressure reactor trip for EPU is 2387.7 psig. For use in Technical Specification 3.3.1, the Allowable Value should be rounded down to 2385 psig.

Operability Limits have been determined for all trip functions (primary trips, backup trips, and the SI Block/Unblock function). The OLs provide new limits to be applied in the I&C calibration procedures for establishing Technical Specification operability of the trip channels during Channel Operational Testing (COT).

It is recommended that the Operability Limits for both primary and backup trips be included in the Technical Requirements Manual (TRM) as limits (more restrictive than the LTSPs) for establishing channel operability during channel surveillance testing. The reason for including OLs in the TRM rather than the Technical Specifications is to allow the station flexibility to revise the field setpoint values, along with their as-left, as-found, and OL values, without requiring prior NRC approval. The LTSPs, which provide protection for the accident analyses, are the appropriate Allowable Values for the protection functions in the Specifications and would remain bounding limits for the primary trips (only).

It is also recommended that a license amendment be submitted to revise the PZR Pressure SI Unblock Allowable Value (currently ≤1800 psig in TS Table 3.3.2-1 based on an outdated 2000 psig operating pressure) with a new SI Unblock Allowable Value of ≤2005 psig based on a new nominal FTSP of 2000 psig, consistent with a normal RCS operating pressure of 2250 psia. Table 9.2-1 also lists the proposed replacement OL values for this function.

It is also recommended that the "Function" description for Item 8 in Tech Spec Table 3.3.2-1 (Ref. G.2) be changed from "SI Block – Pressurizer Pressure" to "SI Unblock – Pressurizer Pressure". This recommendation is made because the SI Unblock function is a safety function required by IEEE 279 to reinstate protective features (SI initiation on low RCS pressure or low steam pressure) automatically on increasing RCS pressure, whereas the SI Block function on decreasing RCS pressure is an operational bypass feature to prevent unnecessary SI actuation, but is not a safety function. The safety function (SI Unblock) to restore protective features should be monitored in Tech Specs.

The following Operability Limits are proposed to be added to the bistable calibration procedures, as shown in the procedure markups in Attachment A.

Table 9.2-1 Operability Limits

Function	Calculated OL^+ and OL^-	Reference
High PZR Pressure Reactor Trip	OL^+ 2370 psig OL^- 2360 psig	**Section 8.5.1**
Low PZR Pressure Reactor Trip	OL^+ 1930 psig OL^- 1920 psig	**Section 8.5.2**
Low PZR Pressure SI Actuation	OL^+ 1740 psig OL^- 1730 psig	**Section 8.5.3**
PZR Pressure SI Unblock (existing)	OL^+ 1780 psig OL^- 1770 psig	**Section 8.5.4**
PZR Pressure SI Unblock (proposed)	OL^+ 2005 psig OL^- 1995 psig	**Section 8.5.5**

9.3 Calculated Limiting Trip Setpoints (LTSP) and Existing Field Trip Setpoints (FTSP)

For the three primary trip setpoints that have an Analytical Limit (AL), this calculation has determined that the existing Field Trip Setpoints (FTSP) for High PZR Pressure Reactor Trip, Low PZR Pressure Reactor Trip and Low PZR Pressure SI actuation are each conservative with respect to their calculated LTSP, with margin.

Table 9.3-1 Calculated Limiting Trip Setpoints/Existing Field Trip Setpoints

Function	Calculated LTSP	Recommended TS AV	Existing FTSP	Margin	Reference
High PZR Pressure Reactor Trip – Current Power Level	**2394.7 psig**	**2390 psig**	**2365 psig**	**29.7 psi**	**Section 8.4.1**
High PZR Pressure Reactor Trip – Extended Power Level	**2387.7 psig**	**2385 psig**	**2365 psig**	**22.7 psi**	**Section 8.4.2**
Low PZR Pressure Reactor Trip – Current Power Level	**1830.7 psig**	**1835 psig**	**1925 psig**	**94.3 psi**	**Section 8.4.3**
Low PZR Pressure Reactor Trip – Extended Power Level	**1855.7 psig**	**1860 psig**	**1925 psig**	**69.3 psi**	**Section 8.4.4**
Low PZR Pressure SI Actuation	**1722.9 psig**	**1725 psig**	**1735 psig**	**12.1 psi**	**Section 8.4.5**

For the High PZR Pressure Reactor Trip and the Low PZR Pressure Reactor Trip, the Margin-to-Trip values (>2364.4 psia and <1955.4 psia, respectively) are conservative with respect to the peak process parameter values (>2351 psia and <2136 psia, respectively), per Sections 8.4.1 and 8.4.2. Therefore, the existing FTSPs for these functions may be retained.

This calculation also recommends changes to the existing Field Trip Setpoints (FTSP) for the PZR Pressure SI Block Enable and SI Unblock functions, to return these two setpoints to the correct values for an RCS operating pressure of 2250 psia, as follows:

Table 9.3-2 Recommended Field Trip Setpoint Changes

Function	Existing FTSP	Recommended FTSP	Reference
PZR Pressure SI Unblock	**1775 psig↑**	**2000 psig↑**	**Section 8.4.4**
PZR Pressure SI Block Enable	**1765 psig↓**	**1990 psig↓**	**Section 8.4.5**

As mentioned in Section 9.2, changing the FTSP for the SI Block and Unblock functions will require a license amendment to first change the Technical Specification limit for the Unblock setting from the current value of ≤ 1800 psig to ≤ 2000 psig.

9.4 Tech Spec Surveillance

The Indicator loops are used to monitor the PZR Pressure for Tech Spec Surveillance SR 3.4.1.1 compliance. The normal loop uncertainties are summarized below:

Table 9.4-1 Normal Loop Uncertainties

	Indicator Loop Uncertainties		**Reference**
	% span	psi	
75/75 Confidence	**± 1.949**	**± 20.0**	**Section 8.3.5**

9.5 Channel Check Tolerances

The Channel Check Tolerances for control board indicators are summarized below. The existing CCT value is acceptable and may be retained.

Table 9.5-1 Channel Check Tolerances

	Channel Check Tolerances		**Existing Channel Check Tolerance**	**Reference**
95/95 Confidence	**± 3.628 % span**	**± 30.0 psi**	**± 30.0 psi**	**Section 8.7**

9.6 Acceptable As-Left and As-Found Tolerances

This Calculation has determined the Acceptable As-Found and As-Left Tolerances for the instruments listed in Section 1.5 (Table 1-1). The calibration procedures listed in Section 10 should be revised as appropriate.

Table 9.6-1 As-Left/As-Found Values

Instrument	**As-Left Tolerance**	**As-Found Tolerance**	**Reference**
Transmitters 1(2)PT-429, 1(2)PT-430, 1(2)PT-431, 1(2)PT-449	± 0.20 mAdc	± 0.39mAdc	8.6.1.1 8.6.2.1

Instrument	As-Left Tolerance	As-Found Tolerance	Reference
Bistables 1(2)PC-429A, 1(2)PC-430A, 1(2)PC-431A, 1(2)PC-429E, 1(2)PC-430H, 1(2)PC-431J, 1(2)PC-449A, 1(2)PC-429D/C, 1(2)PC-430E/F, 1(2)PC-431I/G	± 0.002 Vdc, ± 4.0 psig	± 0.0022 Vdc, ± 4.4 psig	8.6.1.2 8.6.2.2
Current-to-Current Converters 1(2)PM-429A, 1(2)PM-430A, 1(2)PM-431A, 1(2)PM-449A	± 0.10 mAdc	± 0.23 mAdc	8.6.1.3 8.6.2.3
Lead/Lag Modules 1(2)PM-429B, 1(2)PM-430C, 1(2)PM-431C, 1(2)PM-449B	± 0.002 Vdc	± 0.0028 Vdc	8.6.1.4 8.6.2.4
Control Board Indicators 1(2)PI-429, 1(2)PI-430, 1(2)PI-431, 1(2)PI-449A	± 0.80 mAdc	± 0.90 mAdc	8.6.1.5 8.6.2.5

9.7 Scaling

Table 9.7-1 Scaling Values

Setpoints	Function	Input (psig)	Output (mAdc)	Output (Vdc)	Reference
High PZR Pressure Reactor Trip	OL^+	2370	43.50	0.4350	8.8.1 8.6.1.2 8.6.2.2
	As-Found $^+$	2369.4	43.47	0.4347	
	As-Left $^+$	2369	43.45	0.4345	
	FTSP↑	2365	43.25	0.4325	
	As-Left $^-$	2361	43.05	0.4305	
	As-Found $^-$	2360.6	43.03	0.4303	
	OL^-	2360	43.00	0.4300	
Low PZR Pressure Reactor Trip	OL^+	1930	21.50	0.2150	8.8.2 8.6.1.2 8.6.2.2
	As-Found $^+$	1929.4	21.47	0.2147	
	As-Left $^+$	1929	21.45	0.2145	
	FTSP↓	1925	21.25	0.2125	
	As-Left $^-$	1921	21.05	0.2105	
	As-Found $^-$	1920.6	21.03	0.2103	
	OL^-	1920	21.00	0.2100	
Low PZR SI Actuation	OL^+	1740	12.00	0.1200	8.8.3 8.6.1.2 8.6.2.2
	As-Found $^+$	1739.4	11.97	0.1197	
	As-Left $^+$	1739	11.95	0.1195	
	FTSP↓	1735	11.75	0.1175	
	As-Left $^-$	1731	11.55	0.1155	
	As-Found $^-$	1730.6	11.53	0.1153	
	OL^-	1730	11.50	0.1150	
PZR Pressure SI	OL^+	1780	14.00	0.1400	8.8.4

Setpoints	Function	Input (psig)	Output (mAdc)	Output (Vdc)	Reference
Unblock (existing)	As-Found +	1779.4	13.97	0.1397	8.6.1.2 8.6.2.2
	As-Left +	1779	13.95	0.1395	
	FTSP↑	1775	13.75	0.1375	
	As-Left -	1771	13.55	0.1355	
	As-Found -	1770.6	13.53	0.1353	
	OL-	1770	13.50	0.1350	
PZR Pressure SI Block (existing)	As-Found +	1769.4	13.47	0.1347	8.8.5 8.6.1.2 8.6.2.2
	As-Left +	1769	13.45	0.1345	
	FTSP↓	1765	13.25	0.1325	
	As-Left -	1761	13.05	0.1305	
	As-Found -	1760.6	13.03	0.1303	
PZR Pressure SI Unblock (proposed)	OL+	2005	25.25	0.2525	8.8.6 8.6.1.2 8.6.2.2
	As-Found +	2004.4	25.22	0.2522	
	As-Left +	2004	25.20	0.2520	
	FTSP↑	2000	25.00	0.2500	
	As-Left -	1996	24.80	0.2480	
	As-Found -	1995.6	24.78	0.2478	
	OL-	1995	24.75	0.2475	
PZR Pressure SI Block (proposed)	FTSP↓	1990	24.50	0.2450	8.8.7

9.8 Limitations

9.8.1 M&TE Limitations

To preserve the validity of this calculation's results, this calculation requires that all future calibrations of the equipment (addressed in this calculation) be performed using the M&TE mentioned below (equivalent or better may also be used).

Table 9.8.1-1 M&TE

M&TE	Range	Accuracy	Readability	Reference
1(2)ICP 04.001H (PM-429B, 430C, 431C and 449B)				
HP 34401A	0-1.0 Vdc	± (0.0040% reading + 0.0007 % range)	± 0.000001 Vdc	8.1.23
Fluke 45	0-3.0 Vdc	± 0.025 % reading	± 0.0002 Vdc	8.1.23
Fluke 8842A	0-2.0 Vdc	± 0.003 % reading	± 0.00002 Vdc	8.1.23
1(2)ICP 04.001H (PM-429A, 430A, 431A and 449A)				
HP 34401A	0-1.0 Vdc	± (0.0040% reading + 0.0007 % range)	± 0.000001 Vdc	8.1.32

M&TE	Range	Accuracy	Readability	Reference
Fluke 45	0-3.0 Vdc	± 0.025 % reading	± 0.0002 Vdc	8.1.32
Fluke 8842A	0-2.0 Vdc	± 0.003 % reading	± 0.00002 Vdc	8.1.32
Fluke 45 (fast rate)	0-100 mAdc	± 0.05 % reading	± 0.02 mAdc	8.1.32
HP 34401A	0-100 mAdc	± (0.050% reading + 0.005 % range)	± 0.0001 mAdc	8.1.32

9.8.2 Temperature Limitations

The results of this calculation are valid only if the temperature inside the Control/Computer Room instrumentation panels does not exceed 120 °F. GAR 01031654 has been generated to track this limitation.

9.8.3 Implementation Limitation

Changes recommended by this calculation, such as the SI Block Enable setpoint, the SI Unblock setpoint, the revised Technical Specification Allowable Values and new operability limits, and As-Found and As-Left Tolerances for calibration sheets, are NOT to be implemented without approval of the PBNP Design Authority or the appointed designee.

9.9 Graphical Representation of Setpoint Parameters

9.9.0 Overview of Setpoint Diagrams

There are four setpoint diagrams for different functions and their pressure ranges, as shown below.

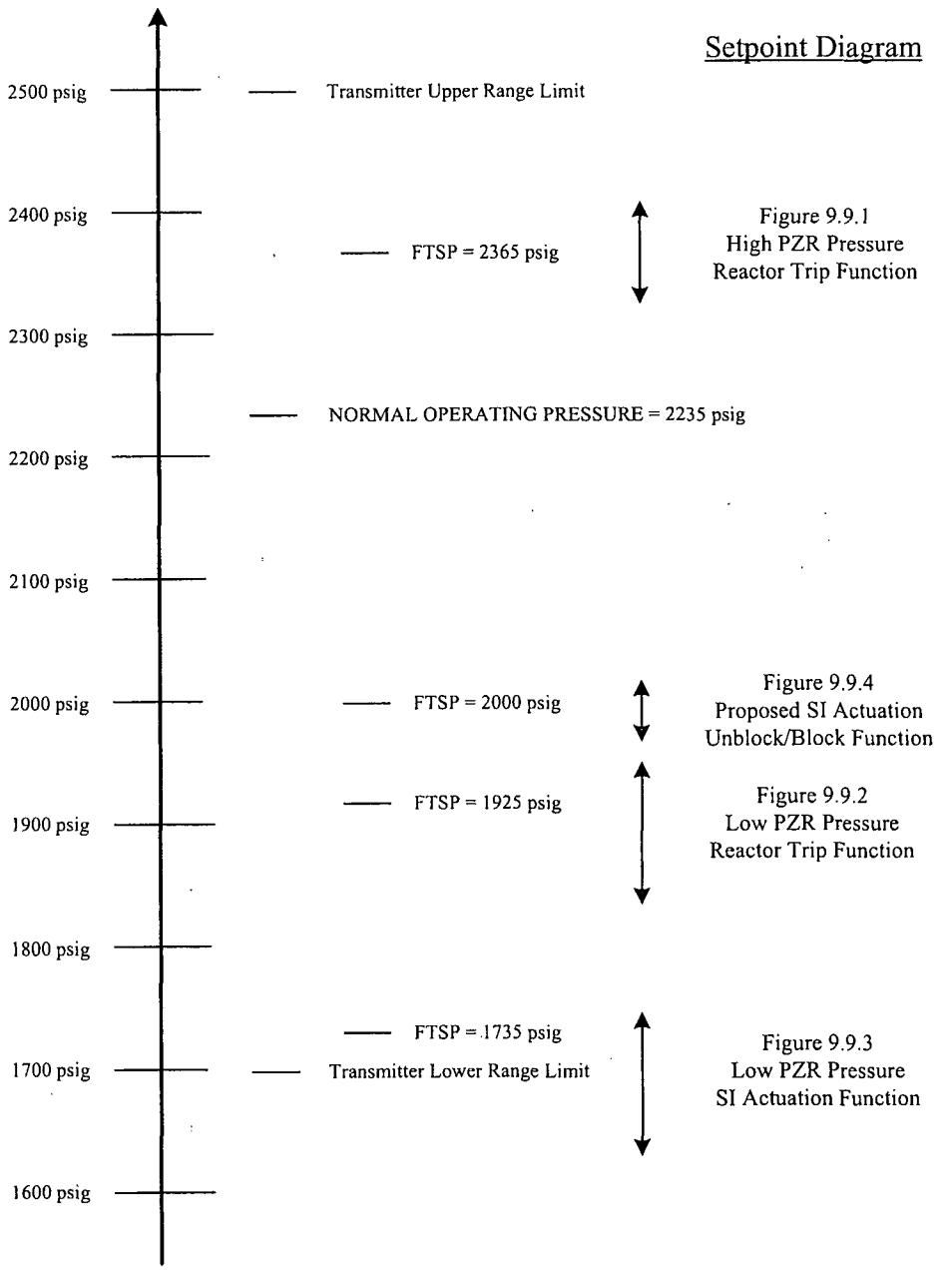

9.9.1 High PZR Pressure Reactor Trip Setpoint

Figure 9.9.1a

High PZR Pressure Reactor Trip Function – Current Power Level
(PC-429A, 430A, 431A)

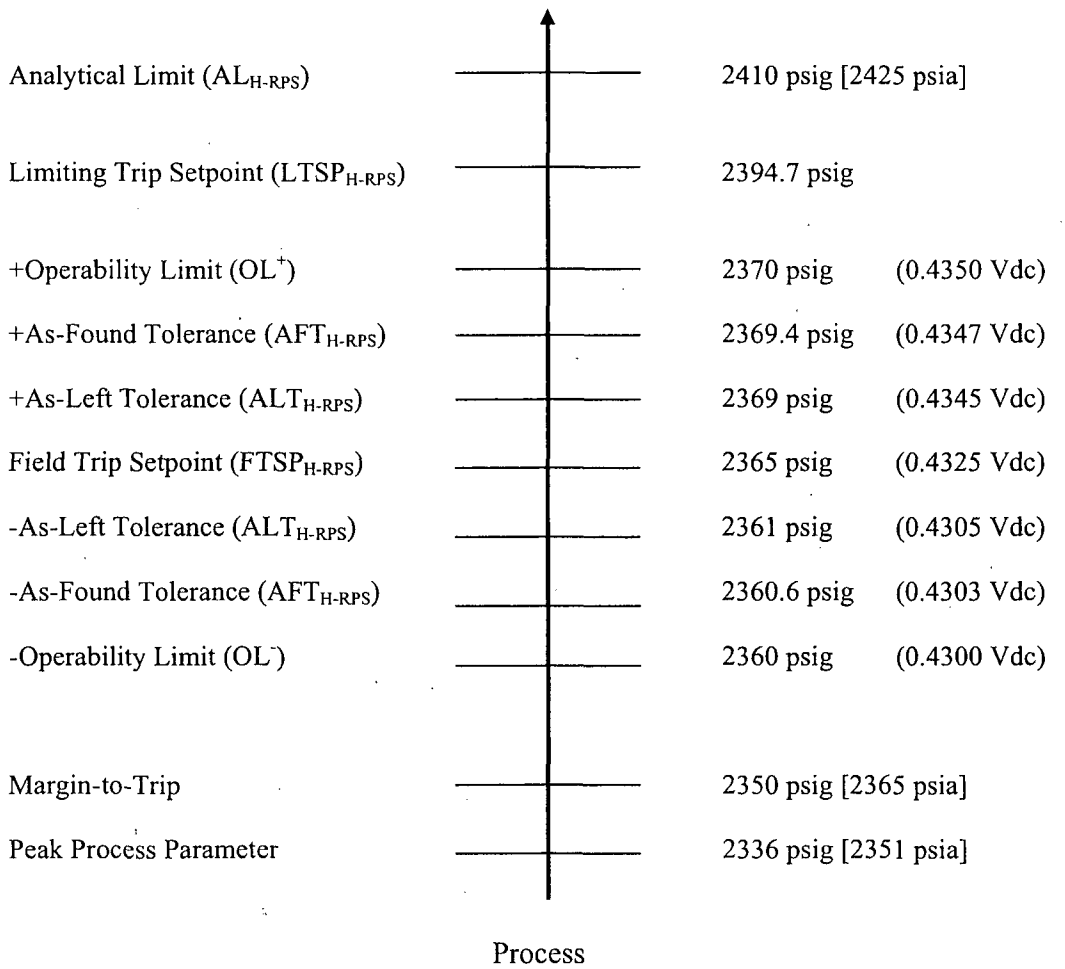

Figure 9.9.1b

High PZR Pressure Reactor Trip Function – EPU
(PC-429A, 430A, 431A)

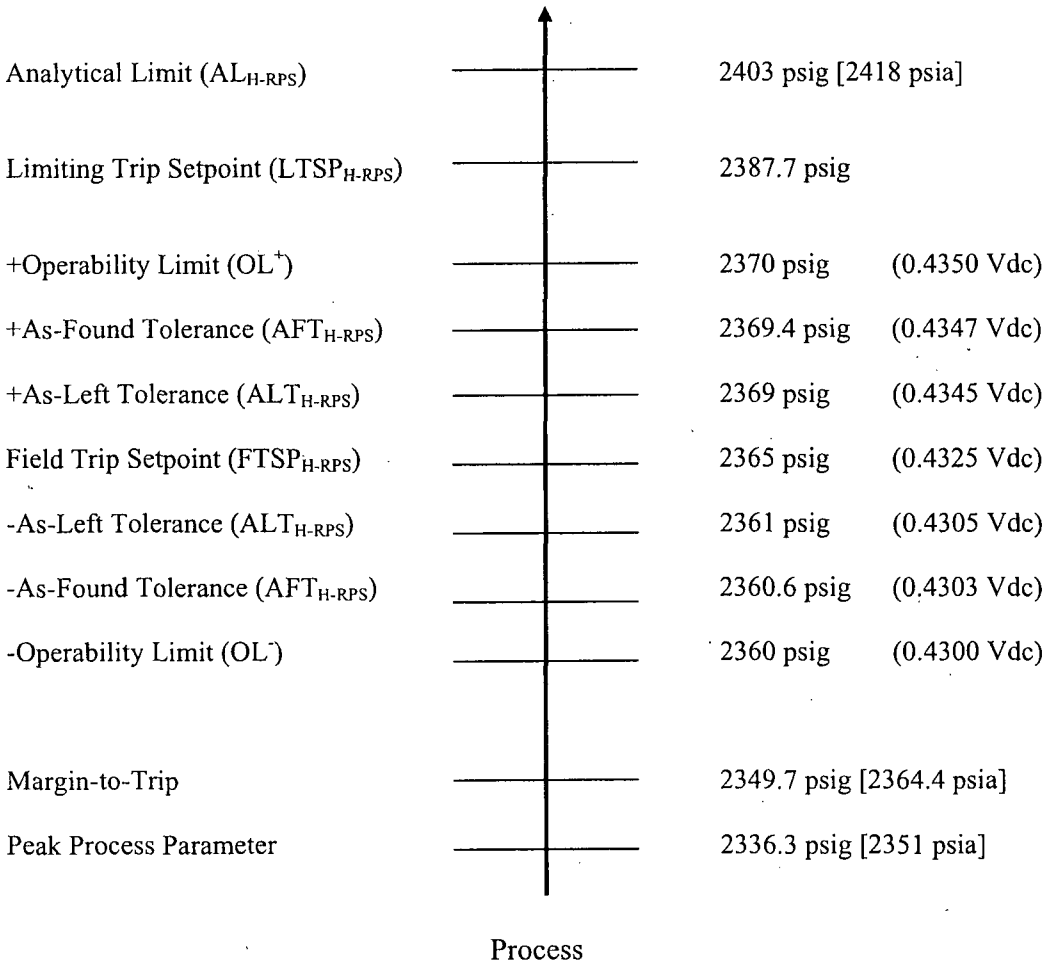

9.9.2 Low PZR Pressure Reactor Trip Setpoint

Figure 9.9.2a

Low PZR Pressure Reactor Trip Bistable – Current Power Level
(PC-429E, 430H, 431J, 449A)

Process

Peak Process Parameter	2121.3 psig [2136 psia]	
Margin-to-Trip	1940.7 psig [1955.4 psia]	
+Operability Limit (OL^+)	1930 psig	(0.2150 Vdc)
+As-Found Tolerance ($AFT_{L\text{-}RPS}$)	1929.4 psig	(0.2147 Vdc)
+As-Left Tolerance ($ALT_{L\text{-}RPS}$)	1929 psig	(0.2145 Vdc)
Field Trip Setpoint ($FTSP_{L\text{-}RPS}$)	1925 psig	(0.2125 Vdc)
-As-Left Tolerance ($ALT_{L\text{-}RPS}$)	1921 psig	(0.2105 Vdc)
-As-Found Tolerance ($AFT_{L\text{-}RPS}$)	1920.6 psig	(0.2103 Vdc)
-Operability Limit (OL^-)	1920 psig	(0.2100 Vdc)
Limiting Trip Setpoint ($LTSP_{L\text{-}RPS}$)	1830.7 psig	
Analytical Limit ($AL_{L\text{-}RPS\text{-}ROD}$)	1815 psig [1830 psia]	
Limiting Trip Setpoint ($LTSP_{L\text{-}RPS\text{-}LOCA}$)	1723.6 psig	
Setpoint Evaluation Starting Limit	1700 psig	
Analytical Limit ($AL_{L\text{-}RPS\text{-}LOCA}$)	1648.0 psig	

Figure 9.9.2b

Low PZR Pressure Reactor Trip Bistable – EPU
(PC-429E, 430H, 431J, 449A)

Process

Peak Process Parameter	2121.3 psig [2136 psia]	
Margin-to-Trip	1940.7 psig [1955.4 psia]	
+Operability Limit (OL^+)	1930 psig	(0.2150 Vdc)
+As-Found Tolerance ($AFT_{L\text{-}RPS}$)	1929.4 psig	(0.2147 Vdc)
+As-Left Tolerance ($ALT_{L\text{-}RPS}$)	1929 psig	(0.2145 Vdc)
Field Trip Setpoint ($FTSP_{L\text{-}RPS}$)	1925 psig	(0.2125 Vdc)
-As-Left Tolerance ($ALT_{L\text{-}RPS}$)	1921 psig	(0.2105 Vdc)
-As-Found Tolerance ($AFT_{L\text{-}RPS}$)	1920.6 psig	(0.2103 Vdc)
-Operability Limit (OL^-)	1920 psig	(0.2100 Vdc)
Limiting Trip Setpoint ($LTSP_{L\text{-}RPS}$)	1855.7 psig	
Analytical Limit ($AL_{L\text{-}RPS\text{-}OTPOAX}$)	1840 psig [1855 psia]	

9.9.3 Low PZR Pressure SI Actuation Setpoint

Figure 9.9.3

Low PZR Pressure SI Actuation Bistable
(PC-429C, 430E, 431G)

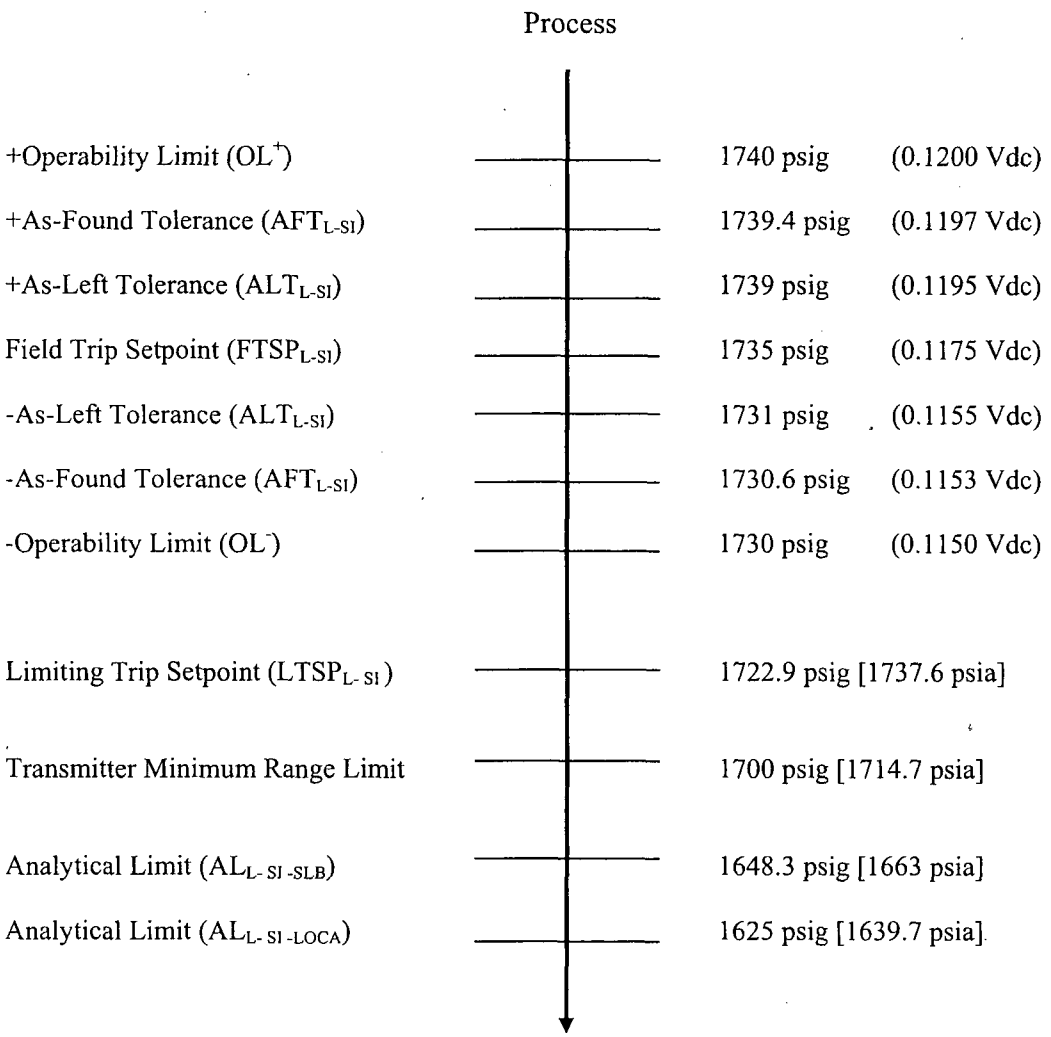

9.9.4 PZR Pressure SI Unblock and Block Enable (Proposed)

Figure 9.9.4

High PZR Pressure SI Unblock/Block Enable Settings (Proposed)
(PC-429D, 430F, 431I)

	Process Limit ($PL_{SI\text{-}UNB}$)	2185 psig	
	+Operability Limit (OL^{+})	2005 psig	(0.2525 Vdc)
	+As-Found Tolerance ($AFT_{SI\text{-}UNB}$)	2004.4 psig	(0.2522 Vdc)
	+As-Left Tolerance ($ALT_{SI\text{-}UNB}$)	2004 psig	(0.2520 Vdc)
(Unblock)	Field Trip Setpoint ($FTSP_{SI\text{-}UNB}$)	2000 psig↑	(0.2500 Vdc)
	-As-Left Tolerance ($ALT_{SI\text{-}UNB}$)	1996 psig	(0.2480 Vdc)
	-As-Found Tolerance ($AFT_{SI\text{-}UNB}$)	1995.6 psig	(0.2478 Vdc)
	-Operability Limit (OL^{-})	1995 psig	(0.2475 Vdc)
	+As-Found Tolerance ($AFT_{SI\text{-}B}$)	1994.4 psig	(0.2472 Vdc)
	+As-Left Tolerance ($ALT_{SI\text{-}B}$)	1994 psig	(0.2470 Vdc)
(Block Enable)	Field Trip Setpoint ($FTSP_{SI\text{-}B}$)	1990 psig↓	(0.2450 Vdc)
	-As-Left Tolerance ($ALT_{SI\text{-}B}$)	1986 psig	(0.2430 Vdc)
	-As-Found Tolerance ($AFT_{SI\text{-}B}$)	1985.6 psig	(0.2428 Vdc)
	Process Limit ($PL_{SI\text{-}B}$)	1735 psig	

Process

10.0 IMPACT ON PLANT DOCUMENTS

Note: Passport Engineering Change (EC) Number for Calculation 2009-0001 Rev 0 is 13243.

- PBNP-IC-31, Rev. 2, "PZR Pressure – Low Safety Injection and High Unblock Safety Injection Instrument Loop Uncertainty/Setpoint Calculation"

  Calculation PBNP-IC-31 was placed on Administrative Hold via CAP 062255 and has been folded into this calculation. The calculation should be superseded.

- WEP-SPT-21, "Pressurizer Pressure EOP Setpoints", Rev. 3

  This calculation provides input to Calculation WEP-SPT-21 for EOP setpoint evaluation.

- 1ICP 04.001H, Rev. 5, "Reactor Protection and Safeguards Analog Racks Pressurizer Pressure Outage Calibration"

  New As-Found Tolerances for Lead/Lag Modules, Current-to-Current Converters and Indicators for Loops 1P-429, 1P-430, 1P-431 and 1P-449 need to be incorporated. Passport A/R No. 01136898 will track the generated change to this document.

- 2ICP 04.001H, Rev. 6, "Reactor Protection and Safeguards Analog Racks Pressurizer Pressure Outage Calibration"

  New As-Found Tolerances for Lead/Lag Modules, Current-to-Current Converters and Indicators for Loops 2P-429, 2P-430, 2P-431 and 2P-449 need to be incorporated. Passport A/R No. 01136898 will track the generated change to this document.

- 1ICP 04.004-1, Rev. 11, "Event V Test Pressure, RCS Wide Range, RC Hot Leg, Pressurizer, and RV Head Vent Pressure Instruments Outage Calibration"

  New As-Found Tolerances for Transmitters 1PT-429, 1PT-430, 1PT-431 and 1PT-449 need to be incorporated. Passport A/R No. 01136898 will track the generated change to this document.

- 2ICP 04.004-1, Rev. 10, "Event V Test Pressure, RCS Wide Range, RC Hot Leg, Pressurizer, and RV Head Vent Pressure Instruments Outage Calibration"

  New As-Found Tolerances for Transmitters 2PT-429, 2PT-430, 2PT-431 and 2PT-449 need to be incorporated. Passport A/R No. 01136898 will track the generated change to this document.

- 1ICP 02.001RD, Rev. 8, "Reactor Protection and Engineered Safety Features Red Channel Analog 92 Day Surveillance Test"

  New As-Left Tolerances, As-Found Tolerances, and Operability Limits for Bistables 1PC-429A, C/D, and E need to be incorporated. Passport A/R No. 01136898 will track the generated change to this document.

- 2ICP 02.001RD, Rev. 11, "Reactor Protection and Engineered Safety Features Red Channel Analog 92 Day Surveillance Test"

  New As-Left Tolerances, As-Found Tolerances, and Operability Limits for Bistables 2PC-429A, C/D, and E need to be incorporated. Passport A/R No. 01136898 will track the generated change to this document.

- 1ICP-02.001BL, Rev. 12, "Reactor Protection and Engineered Safety Features Blue Channel Analog 92 Day Surveillance Test"

New As-Left Tolerances, As-Found Tolerances, and Operability Limits for Bistables 1PC-431A, I/G, and J need to be incorporated. Passport A/R No. 01136898 will track the generated change to this document.

- 2ICP-02.001BL, Rev. 15, "Reactor Protection and Engineered Safety Features Blue Channel Analog 92 Day Surveillance Test"

  New As-Left Tolerances, As-Found Tolerances, and Operability Limits for Bistables 2PC-431A, I/G, and J need to be incorporated. Passport A/R No. 01136898 will track the generated change to this document.

- 1ICP-02.001WH, Rev. 11, "Reactor Protection and Engineered Safety Features White Channel Analog 92 Day Surveillance Test"

  New As-Left Tolerances, As-Found Tolerances, and Operability Limits for Bistables 1PC-430A, E/F, and H need to be incorporated. Passport A/R No. 01136898 will track the generated change to this document.

- 2ICP-02.001WH, Rev. 11, "Reactor Protection and Engineered Safety Features White Channel Analog 92 Day Surveillance Test".

  New As-Left Tolerances, As-Found Tolerances, and Operability Limits for Bistables 2PC-430A, E/F, and H need to be incorporated. Passport A/R No. 01136898 will track the generated change to this document.

- 1ICP-02.001YL, Rev. 10, "Reactor Protection and Engineered Safety Features Yellow Channel Analog 92 Day Surveillance Test"

  New As-Left Tolerances, As-Found Tolerances, and Operability Limits for Bistable 1PC-449A need to be incorporated. Passport A/R No. 01136898 will track the generated change to this document.

- 2ICP-02.001YL, Rev. 13, "Reactor Protection and Engineered Safety Features Yellow Channel Analog 92 Day Surveillance Test"

  New As-Left Tolerances, As-Found Tolerances, and Operability Limits for Bistable 2PC-449A need to be incorporated. Passport A/R No. 01136898 will track the generated change to this document.

- 1ICP 02.020RD, Rev. 11, "Post-Refueling Pre-Startup RPS and ESF Red Channel Analog Surveillance Test"

  New As-Left Tolerances, As-Found Tolerances, and Operability Limits for Bistables 1PC-429A, C/D, and E need to be incorporated.

  Passport A/R No. 01136898 will track the generated change to this document.

- 2ICP 02.020RD, Rev. 10, "Post-Refueling Pre-Startup RPS and ESF Red Channel Analog Surveillance Test"

  New As-Left Tolerances, As-Found Tolerances, and Operability Limits for Bistables 2PC-429A, C/D, and E need to be incorporated.

  Passport A/R No. 01136898 will track the generated change to this document.

- 1ICP 02.020BL, Rev. 10, "Post-Refueling Pre-Startup RPS and ESF Blue Channel Analog Surveillance Test"

  New As-Left Tolerances, As-Found Tolerances, and Operability Limits for Bistables 1PC-431A, I/G, and J need to be incorporated.

Passport A/R No. 01136898 will track the generated change to this document.

- 2ICP 02.020BL, Rev. 10, "Post-Refueling Pre-Startup RPS and ESF Blue Channel Analog Surveillance Test"

  New As-Left Tolerances, As-Found Tolerances, and Operability Limits for Bistables 2PC-431A, I/G, and J need to be incorporated.

  Passport A/R No. 01136898 will track the generated change to this document.

- 1ICP 02.020WH, Rev. 10, "Post-Refueling Pre-Startup RPS and ESF White Channel Analog Surveillance Test"

  New As-Left Tolerances, As-Found Tolerances, and Operability Limits for Bistables 1PC-430A, E/F, and H need to be incorporated.

  Passport A/R No. 01136898 will track the generated change to this document.

- 2ICP 02.020WH, Rev. 10, "Post-Refueling Pre-Startup RPS and ESF White Channel Analog Surveillance Test"

  New As-Left Tolerances, As-Found Tolerances, and Operability Limits for Bistables 2PC-430A, E/F, and H need to be incorporated.

  Passport A/R No. 01136898 will track the generated change to this document.

- 1ICP 02.020YL, Rev. 10, "Post-Refueling Pre-Startup RPS and ESF Yellow Channel Analog Surveillance Test"

  New As-Left Tolerances, As-Found Tolerances, and Operability Limits for Bistable 1PC-449A need to be incorporated.

  Passport A/R No. 01136898 will track the generated change to this document.

- 2ICP 02.020YL, Rev. 10, "Post-Refueling Pre-Startup RPS and ESF Yellow Channel Analog Surveillance Test"

  New As-Left Tolerances, As-Found Tolerances, and Operability Limits for Bistable 2PC-449A need to be incorporated.

  Passport A/R No. 01136898 will track the generated change to this document.

- Setpoint Documents STPT 1.4, Rev. 9, "Pressurizer Pressure and Level"

  High and Low PZR Pressure Reactor Trip Tech Spec AV values and Low PZR Pressure Reactor Trip setpoint have been verified. No changes are required.

- Setpoint Documents STPT 2.1, Rev. 3, "Safety Injection"

  Low PZR Pressure – SI Actuation setpoints have been verified. No changes are required.

  New SI Block (1990 psig), Unblock (2000 psig) setpoints and SI Unblock AV values (2005 psig) need to be incorporated. Passport A/R No. 01136898 will track the generated change to this document.

- Daily Logsheet PBF-2034, pages 90, 91 and 92 of 186, Rev. 74, Control Room Log – U1

  CCT has been verified. No changes are required.

- Daily Logsheet PBF-2035, pages 90, 91 and 92 of 186, Rev. 74, Control Room Log – U2

  CCT has been verified. No changes are required.

- DBD-25 Section A, Rev. 3, NSSS Control Systems Pressurizer Pressure Control

Revise High and Low Pressurizer Reactor Trip Setpoints, SI Block setpoint and SI Block Auto Reset point in Figure A.2.2-1. Marked-up sheet (1 page) is separately transmitted. (Note: Keywords used in searching all DBDs are: "pressurizer pressure", "Reactor Trip", "psig" "allowable" and "analytical".)

Passport A/R No. 01136898 will track the generated change to this document.

- DBD-24, Rev. 4, ESF Actuation System

  Revise Pressurizer Pressure (SI Actuation) channel accuracy in Table 2-6. Revise SI Block and SI Block automatic reset point in Section 5.1. Marked-up sheets (2 pages) are separately transmitted. Passport A/R No. 01136898 will track the generated change to this document.

- DBD-27, Rev. 4, Reactor Protection System

  Revise definition of Allowable Value. Revise Analytical Limits and response time in Table 2-1. Revise setpoint and response time in Note 5 of Table 2-1. Revise Operating Limit in Table 2-2 and delete note 7 of the table. Marked-up sheets (5 pages) are separately transmitted. Passport A/R No. 01136898 will track the generated change to this document.

- Tech Spec 3.3.1, Table 3.3.1-1, Item 7

  If a licensing amendment to revise pressurizer pressure setpoints for current power operation is implemented, revise the "Pressurizer Pressure – Low" and "Pressurizer Pressure – High" reactor trip Allowable Values to ≥ 1835 psig and ≤ 2390 psig, respectively, and eliminate Notes (h) and (i) in Table 3.3.1-1.

  If the EPU licensing amendment is implemented instead, revise the "Pressurizer Pressure – Low" and "Pressurizer Pressure – High" reactor trip Allowable Values to ≥ 1860 psig and ≤ 2385 psig, respectively, and eliminate Notes (h) and (i) in Table 3.3.1-1.

  Passport A/R No. 01136898 will track the generated change to this document.

- Tech Spec 3.3.2, Table 3.3.2-1, Item 8

  After a license amendment is approved to make the change, revise the Item 8 "Function" description from "SI-Block – Pressurizer Pressure" to "SI Unblock – Pressurizer Pressure". Also, revise "SI Unblock – Pressurizer Pressure" Allowable Value from ≤ 1800 psig to ≤ 2005 psig and SI Actuation – Pressurizer Pressure AV value from ≥ 1715 psig to ≥ 1725 psig.

  Passport A/R No. 01136898 will track the generated change to this document.

- Operations Procedure OP 1A, Rev. 95, Cold Shutdown to Hot Standby

  In Sections 3.1.6 and 5.62, revise the reference to SI Unblock setpoint of 1775 psig to 2000 psig. Also, in the "Caution" block of Section 5.61, the SI Unblock AV value should be revised from 1800 psig to 2005 psig.

  Passport A/R No. 01136898 will track the generated change to this document.

- Operations Procedure OP 3C, Rev. 106, Hot Standby to Cold Shutdown

  In Sections 3.1.7 and 5.3.7 revise the reference to SI Block setpoint of 1765 psig to 1990 psig. Also, in the "Caution" block of Section 5.3.6, the SI Unblock value should be revised from 1775 psig to 2000 psig.

  Passport A/R No. 01136898 will track the generated change to this document.

11.0 ATTACHMENTS LIST

Attachment A	Instrument Scaling (7 pages)
Attachment B	S&L Calculation 2006-16540, Rev. 0, "Foxboro Pressure Transmitters Acceptable Accuracy Limits During and After Postulated Seismic Event" (16 pages)
Attachment C	E-mail from Robert Francis of Wyle Laboratories to Asif Mohiuddin of S&L, confirmation of telecon regarding the relationship between LOCA/HELB Temperature Effect and Radiation Effect, dated 8/14/2006 (2 pages)
Attachment D	Walkdown Record Regarding Minor Divisions for PZR Pressure Indicators (PI-429, PI-430, PI-431 and PI-449A) (2 pages)
Attachment E	Pressurizer Pressure Analytical Limits (11 pages)
Attachment F	Reference G.56 – NPM 2007-0151, "Position Paper on Transmitter Environmental Uncertainties for PBNP-IC-12, 'Pressurizer Pressure Uncertainty/Setpoint Calculation'" (11 pages)
Attachment G	Accident Ambient Containment Pressure Calculation (4 pages)

12.0 10 CFR 50.59 REVIEW

10 CFR 50.59 screening SCR 2006-0249 Rev 1 was prepared to support implementing the calibration limits determined by this calculation into the associated I&C calibration procedures. The screening concluded that a 50.59 evaluation and UFSAR change are not required as a result of the addition of calibration limits listed in Section 9.7 above. The calibration limits include the as-left, as-found, and Operability limits for each pressurizer pressure reactor trip and ESFAS field setpoint, as summarized in Section 9.7.

NRC prior approval of a licensing amendment is required in order to implement the revised values in the Technical Specifications for the RPS and ESFAS Allowable values associated with the reactor trip, ESF actuation, and SI Unblock functions. The purpose of a 50.59 review is to determine if prior NRC approval is necessary to implement changes to the plant. No 50.59 review is necessary for revising the Technical Specification values because a license amendment is already acknowledged to be required. The present intent is to include the TS changes identified in this calculation for RPS and ESFAS setpoints in the Extended Power Uprate License Amendment Request.

Note that EPU implementation after the EPU license amendment is received from NRC will require separate screening and possibly full 50.59 evaluation of individual changes being made. For future EPU implementation, a separate 50.59 screening number (SCR 2008-178) and a separate 50.59 evaluation number (SE 2008-014) have been reserved.

Attachment A

Instrument Scaling

This calculation has determined Acceptable As-Found Tolerances for all instruments identified in Section 1.5. The following tables illustrate the necessary modifications to calibration procedures P.2 through P.14 to account for these new tolerance values. The area within the bolded box represent the necessary changes, all other fields are provided for convenience only.

1(2)ICP 04.004-1 (Ref. P.13 and P.14)

1(2)PT-429, 430, 431, 449 T-1 PZR Pressure Transmitter							
Input	Output (mAdc)			As- Found Limits (mAdc)		As- Left Limits (mAdc)	
psig	Ideal	As-Found	As-Left	Low	High	Low	High
1700.0	9.47			9.08	9.86	9.27	9.67
1900.0	19.47			19.08	19.86	19.27	10.67
2100.0	29.47			29.08	29.86	29.27	29.67
2300.0	39.47			39.08	39.86	39.27	39.67
2500.0	49.47			49.08	49.86	49.27	49.67
2300.0	39.47			39.08	39.86	39.27	39.67
2100.0	29.47			29.08	29.86	29.27	29.67
1900.0	19.47			19.08	19.86	19.27	19.67
1700.0	9.47			9.08	9.86	9.27	9.67

1(2)ICP 04.001H (Ref. P.11 and P.12)

1(2)PM-429B, 430C, 431C, 449B Pressurizer Pressure Dynamic Comp							
PZR Press Input	Comp Press Output (Vdc)			As- Found Limits (Vdc)		As- Left Limits (Vdc)	
Vdc	Ideal	As-Found	As-Left	Low	High	Low	High
0.1000	0.1000			0.0972	0.1028	0.0980	0.1020
0.2000	0.2000			0.1972	0.2028	0.1980	0.2020
0.3000	0.3000			0.2972	0.3028	0.2980	0.3020
0.4000	0.4000			0.3972	0.4028	0.3980	0.4020
0.5000	0.5000			0.4972	0.5028	0.4980	0.5020

Attachment A

1(2)ICP 04.001H (Ref. P.11 and P.12)

1(2)PM-429A, 430A, 431A, 449A Pressurizer Pressure I/I Conv							
PZR Press Input	Comp Press Output (mAdc)			As- Found Limits (mAdc)		As- Left Limits (mAdc)	
Vdc	Ideal	As-Found	As-Left	Low	High	Low	High
0.1000	10.00			9.77	10.23	9.90	10.10
0.2000	20.00			19.77	20.23	19.90	20.10
0.3000	30.00			29.77	30.23	29.90	30.10
0.4000	40.00			39.77	40.23	39.90	40.10
0.5000	50.00			49.77	50.23	49.90	50.10

1(2)ICP 04.001H (Ref. P.11 and P.12)

1(2)PI-429, 430, 431, 449A Pressurizer Pressure Indicator							
OUTPUT	INPUT (mAdc)			As- Found Limits (mAdc)		As- Left Limits (mAdc)	
psig	Ideal	As-Found	As-Left	Low	High	Low	High
1700.0	10.00			9.10	10.90	9.20	10.80
1900.0	20.00			19.10	20.90	19.20	20.80
2100.0	30.00			29.10	30.90	29.20	30.80
2300.0	40.00			39.10	40.90	39.20	40.80
2500.0	50.00			49.10	50.90	49.20	50.80
2300.0	40.00			39.10	40.90	39.20	40.80
2100.0	30.00			29.10	30.90	29.20	30.80
1900.0	20.00			19.10	20.90	19.20	20.80
1700.0	10.00			9.10	10.90	9.20	10.80

Attachment A

Section 5.18.1 of 1(2) ICP 02.001BL (Ref. P.2 and P.7) and Section 5.12.1 of 1(2) ICP 02.020BL (Ref. P.24 and P.28)

Pressurizer Pressure	Bistable Light	Process Setpoint psig	Output (PZR Press)			As-Left Limits		As-Found Limits		Operability Limits	
			Setpoint Vdc	As-Found Vdc	As-Left Vdc	Low Vdc	High Vdc	Low Vdc	High Vdc	Low Vdc	High Vdc
1(2)-PC-431A	High Press Trip	2365	0.4325↑			0.4305	0.4345	0.4303	0.4347	0.4300	0.4350
1(2)-PC-431I/G	SI G (R)	1735	0.1175↓			0.1155	0.1195	0.1153	0.1197	0.1150	0.1200
1(2)-PC-431I/G	Unblock SI I (G)	1775	0.1375↑			0.1355	0.1395	0.1353	0.1397	0.1350	0.1400
1(2)-PC-431I/G SI Block Enable	Unblock SI I (G) (Light ON)	1765	0.1325↓			0.1305	0.1345	0.1303	0.1347	None	None
			Output (Comp Press)								
1(2)-PC-431J	Low Press Trip	1925	0.2125↓			0.2105	0.2145	0.2103	0.2147	0.2100	0.2150

- Operability Limits • 1(2)-PC-431A ≥ 0.4300 Vdc (≥ 2360 psig) and ≤ 0.4350 Vdc (≤ 2370 psig) (Ref: Calculation 2009-0001 Rev 0)
- High PZR Pressure Trip Function Technical Specification Limit • 1(2)-PC-431A ≤ 0.4425 Vdc (≤ 2385 psig)

- Operability Limits • 1(2)-PC-431G ≥ 0.1150 Vdc (≥ 1730 psig) and ≤ 0.1200 Vdc (≤ 1740 psig) (Ref: Calculation 2009-0001 Rev 0)
- Low PZR Pressure SI Actuation Function Technical Specification Limit • 1(2)-PC-431G ≥ 0.1075 Vdc (≥ 1715 psig)

- Operability Limits • 1(2)-PC-431I ≥ 0.1350 Vdc (≥ 1770 psig) and ≤ 0.1400 Vdc (≤ 1780 psig) (Ref: Calculation 2009-0001 Rev 0)
- Unblock SI Function Technical Specification Limit • 1(2)-PC-431I ≤ 0.1500 Vdc (≤ 1800 psig)

- Operability Limits • 1(2)-PC-431J ≥ 0.2100 Vdc (≥ 1920 psig) and ≤ 0.2150 Vdc (≤ 1930 psig) (Ref: Calculation 2009-0001 Rev 0)
- Low PZR Pressure Trip Function Technical Specification Limit • 1(2)-PC-431J ≥ 0.2025 Vdc (≥ 1905 psig)

Attachment A

Section 5.18.1 of 1(2) ICP 02.001RD (Ref. P.3 and P.8) and Section 5.13.1 of 1(2) ICP 02.020RD (Ref. P.25 and P.29)

Pressurizer Pressure	Bistable Light	Process Setpoint psig	Output (PZR Press)			As-Left Limits		As-Found Limits		Operability Limits	
			Setpoint Vdc	As-Found Vdc	As-Left Vdc	Low Vdc	High Vdc	Low Vdc	High Vdc	Low Vdc	High Vdc
1(2)-PC-429A	High Press Trip	2365	0.4325↑			0.4305	0.4345	0.4303	0.4347	0.4300	0.4350
1(2)-PC-429C/D	SI C (R)	1735	0.1175↓			0.1155	0.1195	0.1153	0.1197	0.1150	0.1200
1(2)-PC-429C/D	Unblock SI D (G)	1775	0.1375↑			0.1355	0.1395	0.1353	0.1397	0.1350	0.1400
1(2)-PC-429C/D SI Block Enable	Unblock SI D (G) (Light ON)	1765	0.1325↓			0.1305	0.1345	0.1303	0.1347	None	None
			Output (Comp Press)								
1(2)-PC-429E	Low Press Trip	1925	0.2125↓			0.2105	0.2145	0.2103	0.2147	0.2100	0.2150

- Operability Limits • 1(2)-PC-429A ≥ 0.4300 Vdc (≥ 2360 psig) and ≤ 0.4350 Vdc (≤ 2370 psig) (Ref: Calculation 2009-0001 Rev 0)
- High PZR Pressure Trip Function Technical Specification Limit • 1(2)-PC-429A ≤ 0.4425 Vdc (≤ 2385 psig)

- Operability Limits • 1(2)-PC-429C ≥ 0.1150 Vdc (≥ 1730 psig) and ≤ 0.1200 Vdc (≤ 1740 psig) (Ref: Calculation 2009-0001 Rev 0)
- Low PZR Pressure SI Actuation Function Technical Specification Limit • 1(2)-PC-429C ≥ 0.1075 Vdc (≥ 1715 psig)

- Operability Limits • 1(2)-PC-429D ≥ 0.1350 Vdc (≥ 1770 psig) and ≤ 0.1400 Vdc (≤ 1780 psig) (Ref: Calculation 2009-0001 Rev 0)
- Unblock SI Function Technical Specification Limit • 1(2)-PC-429D ≤ 0.1500 Vdc (≤ 1800 psig)

- Operability Limits • 1(2)-PC-429E ≥ 0.2100 Vdc (≥ 1920 psig) and ≤ 0.2150 Vdc (≤ 1930 psig) (Ref: Calculation 2009-0001 Rev 0)
- Low PZR Pressure Trip Function Technical Specification Limit • 1(2)-PC-429E ≥ 0.2025 Vdc (≥ 1905 psig)

Attachment A

Section 5.18.1 of 1(2) ICP 02.001WH (Ref. P.4 and P.9) and Section 5.12.1 of 1(2) ICP 02.020WH (Ref. P.26 and P.30)

Pressurizer Pressure	Bistable Light	Process Setpoint psig	Output (PZR Press)			As-Left Limits		As-Found Limits		Operability Limits	
			Setpoint Vdc	As-Found Vdc	As-Left Vdc	Low Vdc	High Vdc	Low Vdc	High Vdc	Low Vdc	High Vdc
1(2)-PC-430A	High Press Trip	2365	0.4325↑			0.4305	0.4345	0.4303	0.4347	0.4300	0.4350
1(2)-PC-430E/F	SI E (R)	1735	0.1175↓			0.1155	0.1195	0.1153	0.1197	0.1150	0.1200
1(2)-PC-430E/F	Unblock SI F (G)	1775	0.1375↑			0.1355	0.1395	0.1353	0.1397	0.1350	0.1400
1(2)-PC-430E/F SI Block Enable	Unblock SI F (G) (Light ON)	1765	0.1325↓			0.1305	0.1345	0.1303	0.1347	None	None
			Output (Comp Press)								
1(2)-PC-430H	Low Press Trip	1925	0.2125↓			0.2105	0.2145	0.2103	0.2147	0.2100	0.2150

- Operability Limits • 1(2)-PC-430A ≥ 0.4300 Vdc (≥ 2360 psig) and ≤ 0.4350 Vdc (≤ 2370 psig) (Ref: Calculation 2009-0001 Rev 0)
- High PZR Pressure Trip Function Technical Specification Limit • 1(2)-PC-430A ≤ 0.4425 Vdc (≤ 2385 psig)

- Operability Limits • 1(2)-PC-430E ≥ 0.1150 Vdc (≥ 1730 psig) and ≤ 0.1200 Vdc (≤ 1740 psig) (Ref: Calculation 2009-0001 Rev 0)
- Low PZR Pressure SI Actuation Function Technical Specification Limit • 1(2)-PC-430E ≥ 0.1075 Vdc (≥ 1715 psig)

- Operability Limits • 1(2)-PC-430F ≥ 0.1350 Vdc (≥ 1770 psig) and ≤ 0.1400 Vdc (≤ 1780 psig) (Ref: Calculation 2009-0001 Rev 0)
- Unblock SI Function Technical Specification Limit • 1(2)-PC-430F ≤ 0.1500 Vdc (≤ 1800 psig)

- Operability Limits • 1(2)-PC-430H ≥ 0.2100 Vdc (≥ 1920 psig) and ≤ 0.2150 Vdc (≤ 1930 psig) (Ref: Calculation 2009-0001 Rev 0)
- Low PZR Pressure Trip Function Technical Specification Limit • 1(2)-PC-430H ≥ 0.2025 Vdc (≥ 1905 psig)

Attachment A

Section 5.16.1 of 1(2) ICP 02.001YL (Ref. P.5 and P.10) and Section 5.11.1 of 1(2) ICP 02.020YL (Ref. P.27 and P.31)

Pressurizer Pressure	Bistable Light	Process Setpoint psig	Output (PZR Press)			As-Left Limits		As-Found Limits		Operability Limits	
			Setpoint Vdc	As-Found Vdc	As-Left Vdc	Low Vdc	High Vdc	Low Vdc	High Vdc	Low Vdc	High Vdc
1(2)-PC-449A	Low Press Trip	1925	0.2125↓			0.2105	0.2145	0.2103	0.2147	0.2100	0.2150

- Operability Limits • 1(2)-PC-449A ≥ 0.2100 Vdc (≥ 1920 psig) and ≤ 0.2150 Vdc (≤ 1930 psig) (Ref: Calculation 2009-0001 Rev 0)
- Low PZR Pressure Trip Function Technical Specification Limit • 1(2)-PC-449A ≥ 0.2025 Vdc (≥ 1905 psig)

Attachment A

Per Section 9.8.1, to preserve the validity of this calculation's results, this calculation requires that all future calibrations of the equipment (addressed in this calculation) be performed using the M&TE indicated below (or better). This table needs to be implemented in the indicated calibration procedures to provide the calibrator with a list of acceptable M&TE equipment.

M&TE	Range	Accuracy	Readability	Reference
1(2)ICP 04.001H (PM-429B, 430C, 431C and 449B)				
HP 34401A	0-1.0 Vdc	± (0.0040% reading + 0.0007 % range)	± 0.000001 Vdc	8.1.23
Fluke 45	0-3.0 Vdc	± 0.025 % reading	± 0.0002 Vdc	8.1.23
Fluke 8842A	0-2.0 Vdc	± 0.003 % reading	± 0.00002 Vdc	8.1.23
1(2)ICP 04.001H (PM-429A, 430A, 431A and 449A)				
HP 34401A	0-1.0 Vdc	± (0.0040% reading + 0.0007 % range)	± 0.000001 Vdc	8.1.32
Fluke 45	0-3.0 Vdc	± 0.025 % reading	± 0.0002 Vdc	8.1.32
Fluke 8842A	0-2.0 Vdc	± 0.003 % reading	± 0.00002 Vdc	8.1.32
Fluke 45 (fast rate)	0-100 mAdc	± 0.05 % reading	± 0.02 mAdc	8.1.32
HP 34401A	0-100 mAdc	± (0.050% reading + 0.005 % range)	± 0.0001 mAdc	8.1.32

Attachment B

ISSUE SUMMARY
Form SOP-0402-07, Revision 7A

DESIGN CONTROL SUMMARY

CLIENT:	NUCLEAR MANAGEMENT COMPANY (NMC)	UNIT NO.: 1 & 2	PAGE NO.: 1
PROJECT NAME:	POINT BEACH NUCLEAR PLANT		
PROJECT NO:	11165-041	☒ NUCLEAR SAFETY-RELATED	
CALC NO.:	2006-16540	☐ NOT NUCLEAR SAFETY-RELATED	
TITLE:	FOXBORO PRESSURE TRANSMITTERS ACCEPTABLE ACCURACY LIMITS DURING AND AFTER POSTULATED SEISMIC EVENT		
EQUIPMENT NO.:	1/2LT- 461, 462, 463, 471, 472, 473 1/2PT-429, 430, 431, 449		

IDENTIFICATION OF PAGES ADDED/REVISED/SUPERCEDED/VOIDED AND REVIEW METHOD

Original issue.

INPUTS / ASSUMPTIONS
☒ VERIFIED
☐ UNVERIFIED

REVIEW METHOD:	Detailed Review		REV. 0
STATUS:	Approved		DATE for REV.: 12-20-06
PREPARER:	L. Sorkin	L. Sorkin	DATE: 12-20-06
REVIEWER:	H. Kullegowda	H. Kullegowda	DATE: 12-20-06
APPROVER:	I. T. Kisisel	Ismail Kisisel	DATE: 12-20-06

IDENTIFICATION OF PAGES ADDED/REVISED/SUPERCEDED/VOIDED AND REVIEW METHOD

INPUTS / ASSUMPTIONS
☐ VERIFIED
☐ UNVERIFIED

REVIEW METHOD: DETAILED REVIEW	
STATUS: APPROVED	DATE for REV.:
PREPARER:	DATE:
REVIEWER:	DATE:
APPROVER:	DATE:

IDENTIFICATION OF PAGES ADDED/REVISED/SUPERCEDED/VOIDED AND REVIEW METHOD

INPUTS / ASSUMPTIONS
☐ VERIFIED
☐ UNVERIFIED

REVIEW METHOD: DETAILED REVIEW	
STATUS: APPROVED	DATE for REV.:
PREPARER:	DATE:
REVIEWER:	DATE:
APPROVER:	DATE:

The reviewer's signature indicates compliance with S&L procedure SOP-0402 and the verification of, as a minimum, the following items: correctness of mathematics for manual calculations, appropriateness of input data, appropriateness of assumptions, and appropriateness of the calculation method.

NOTE: PRINT AND SIGN IN THE SIGNATURE AREAS

Attachment B

TABLE OF CONTENTS

SECTION		PAGE
CALCULATION COVER SHEET		1
TABLE OF CONTENTS		2
1.	PURPOSE AND SCOPE	3
2.	DESIGN INPUT	3
3.	ASSUMPTIONS	6
4.	METHODOLOGY AND ACCEPTANCE CRITERIA	6
5.	REFERENCES	7
6.	CALCULATIONS	10
7.	CONCLUSIONS	12

ATTACHMENTS		PAGES
A	Foxboro Transmitters Seismic Mounting Assemblies, Excerpt from Foxboro Publication PL 008-548	A1-A1
B	Mounting Support Bracket for Foxboro N-E13DM Transmitters, Component ID's 1/2LT-461, 462, 463, 471, 472, 473	B1-B1
C	Mounting Support Bracket for Foxboro N-E11GM Transmitters, Component ID's 1/2PT-429, 430, 431, 449	C1-C1
D	Wyle Report 45592-4, Table VIII-3, Transmitter Errors for 5-Point Calibration Checks During Seismic Tests	D1-D1

Attachment B

1. PURPOSE AND SCOPE

The purpose of this calculation is to assess the support flexibility of Foxboro N-E10 Series Pressure Transmitters, as well as to verify the acceptable accuracy limits pertaining to safety related function of transmitters under the applicable seismic conditions. The components have been identified as follows:

- Component IDs 1/2LT-461, 462, 463, 471, 472, 473

  These components are Foxboro Model N-E13DM Differential Pressure Transmitters installed on wall-mounted supports in Containment Building at Elevation 21' (References 5.1.1, 5.1.2 and 5.1.3)

- Component IDs 1/2PT-429, 430, 431, 449

  These components are Foxboro Model N-E11GM Gauge Pressure Transmitters installed on wall-mounted support in Containment Building at Elevation 46' (References 5.2.1, 5.2.2 and 5.2.3)

The seismic qualification test program for Foxboro N-E10 Series Pressure Transmitters is documented in Wyle Laboratories Test Report No. 45592-4 (Reference 5.5). The representative transmitters qualified by this test report are:

- Differential Pressure Transmitters Model Nos. N-E13DM-IIM1, N-E13DH-HIM1 and N-E13DH-IIH1

- Gauge Pressure Transmitters Model Nos. N-E11GM-HIE2 and N-E11GH-IIM2

The field-mounting configuration of instrument supports is not bounded by seismic tests. In addition, because of the generic nature of the qualification test program, the pressure transmitter output shifts specified by the manufacturer (+/-5% for seismic and +/-1% for post-seismic conditions) are identified in the report as the acceptable error values. However, the data in the seismic section of the report shows that for all tested transmitters the outputs have shifted by less than +/-1% of span.

The scope of this calculation is to:

1. Evaluate the actual in-field installations of the transmitters to determine whether the Reference 5.5 report is usable for the subject transmitters, and

2. Review the data in the seismic section of the report to verify the acceptable accuracy limits.

2. DESIGN INPUT

2.1 Similarity Between Installed and Tested Transmitters

Foxboro Document No. OOAAC12 (Reference 5.6) establishes the qualification of the installed transmitters by similarity to the representative transmitters qualified by generic seismic tests. The details of similarity between test specimens and the actual installed transmitters are presented on the following pages.

Attachment B

Model N-E13DM

The tested transmitter is Model N-E13DM-IIM1, which represents the basic Model N-E13DM transmitter with options IIM1. As provided by Reference 5.7, the options available with the basic model are:

Output Signal:	H = 10 to 50 mA, 60 to 95 Vdc I = 4 to 20 mA, 25 to 42 Vdc
Base and Cover Material:	I = cast iron A = aluminum
Sensor Code:	M = 20 to 205 inches H_2O H = 200 to 850 inches H_2O
Process Connections:	1 = ¼ NPT 2 = ½ NPT
Mounting bracket:	A = horizontal pipe mounting B = vertical pipe mounting C = wall mounting (identical to vertical pipe mounting)

The basis for qualification by similarity of Model N-E13DM transmitters with any of the option codes listed above is as follows:

- No distinction is made between the two output signals offered. For the output signal codes H and I, performance results are the same under all qualified conditions; thus all units are qualified either output option.
- The approximate weights of transmitters with cast iron and aluminum base and cover materials are 42 lbs. and 25 lbs., respectively (Reference 5.7). This results in difference between centers of gravity. However, the heavier transmitter was tested which is the worst case with regards to the dynamic response and stresses to the bolting and bracket.
- Two measurement sensors or bellow capsules representing a range variety from 20 to 850 inches H_2O are available with the basic model. The tested sensor is a code M bellows with a range of 20 to 205 inches H_2O. Due to the fact that the range of N-E13DM transmitters is 30 to 140 inches H_2O, this measurement sensor is smaller than the sensor code H. However, Model N-E13DH-IIH1 was also tested, and since material of construction fill fluid and function of the larger capsule are identical to the DM transmitters, all sensor codes are qualified.
- The tested transmitter was provided with ¼ NPT process connection. This is smaller than ½ NPT connection, however since ¼ NPT is qualified, ½ NPT is also qualified because it is a stronger connection.
- Both the horizontal and vertical pipe mount brackets were tested with the N-E13DH cast iron construction transmitters. The seismic brackets were attached to simulated pipe fixture in the worst case bolted configuration. The N-E13DH cast iron construction transmitters represent the maximum transmitter mass; thus, the mounting of N-E13DM transmitters is enveloped.

Attachment B

Model N-E11GM

The tested transmitter is Model N-E11GM-HIE2, which represents the basic Model N-E11GM transmitter with options HIE2. As provided by Reference 5.7, the options available with the basic model are:

Output Signal:	H = 10 to 50 mA, 60 to 95 Vdc I = 4 to 20 mA, 25 to 42 Vdc
Base and Cover Material:	I = cast iron A = aluminum
Sensor Code (span):	A = 10 to 80 psi B = 20 to 200 psi C = 40 to 400 psi D = 100 to 1000 psi E = 200 to 2000 psi
Process Connections:	1 = ¼ NPT 2 = ½ NPT
Mounting bracket:	A = horizontal pipe mounting B = vertical pipe mounting C = wall mounting (identical to vertical pipe mounting)

The basis for qualification by similarity of Model N-E11GM transmitters with any of the option codes listed above is as follows:

- No distinction is made between the two output signals offered. For the output signal codes H and I, performance results are the same under all qualified conditions; thus all units are qualified either output option.
- The approximate weights of transmitters with cast iron and aluminum base and cover materials are 35 lbs. and 18 lbs., respectively (Reference 5.7). This results in difference between centers of gravity. However, the heavier transmitter was tested which is the worst case with regards to the dynamic response and stresses to the bolting and bracket.
- Five measurement sensors or bellow capsules representing a wide range variety from 10 to 2000 psi are available with the basic model. The tested sensor is a code E bellows with a range of 200 to 2000 psi; thus, all other sensor codes are enveloped. In addition, performance specifications under Design Basis Events are the same regardless of capsule designation.
- The tested transmitter was provided with ½ NPT process connection. This is larger than ¼ NPT connection. However, ¼ NPT connection was tested with Model N-E13DM, and it is also qualified.
- Only the vertical seismic pipe bracket was tested with the cast iron construction transmitter. This combination was chosen as the worst case stress combination versus the horizontal pipe seismic bracket. Thus, the tested vertical seismic mounting qualifies all the similarity transmitters including the vertical and horizontal seismic brackets.

Attachment B

2.2 Mounting Configurations

Each pressure transmitter is supplied with the kit that includes mounting bracket and two sets of screws (Reference 5.9, Attachment A). One set of screws is used to mount the transmitter on bracket, and the other is for attaching transmitter/bracket assembly to instrument support. As shown in Section 2.1, the tested components including mounting brackets are similar to the components used in actual installation; thus, the mounting hardware provided by the manufacturer is bounded by seismic tests.

Model N-E13DM Pressure Transmitters, Component IDs 1/2LT-461, 462, 463, 471, 472, 473 are installed on wall-mounted support as shown on Drawing No. 13754.22-SK-CA-002 (Reference 5.3, Attachment B). The field-mounting configuration of instrument support is not bounded by seismic tests.

Model N-E11GM Pressure Transmitters, Component IDs 1/2PT-429, 430, 431, 449 are installed on wall-mounted support as shown on Drawing No. 13754.22-SK-CA-001 (Reference 5.4, Attachment C). The field-mounting configuration of instrument support is not bounded by seismic tests.

2.3 Seismic Demand for Equipment Qualification

The seismic demand for equipment qualification is based on rigidity of the structural support. For rigid support, the seismic demand is defined in terms of the floor response spectra (RRS) provided by Screening Evaluation Work Sheets (Reference 5.8).

3. ASSUMPTIONS

None.

4. METHODOLOGY AND ACCEPTANCE CRITERIA

The natural frequency of the support is determined for the most flexible portion of the support by treating it as a cantilever beam with the entire load concentrated at the free end. It is the intent to demonstrate that the natural frequency of the support is greater than the 20 Hz cut-off frequency indicated on the seismic demand spectra (Reference 5.8). This insures that the support is rigid and the equipment mounted on support will experience the floor response spectra without any amplification.

The seismic qualification test report is reviewed with respect to the components structural integrity and operability. The transmitters are seismically qualified provided the following conditions are satisfied:

- The seismic demand for equipment qualification (RRS) is enveloped by the test response spectra (TRS).
- No anomalies occurred during seismic testing which would have affected performance and/or integrity of the transmitters.

Meeting the above conditions insures that the data in the seismic section of the report showing that for all tested transmitters the outputs have shifted by less than +/-1% of span is applicable to use at Point Beach Nuclear Plant.

Attachment B

5. REFERENCES

5.1 Drawings and Procedures for Foxboro Model N-E13DM Pressure Transmitters:

5.1.1 Installation Drawings:

(a) S&W Drawing No. 13754.22-SK-1028, Rev. 4, Instrument Installation 1LT-461
(b) S&W Drawing No. 13754.22-SK-1032, Rev. 4, Instrument Installation 1LT-462
(c) S&W Drawing No. 13754.22-SK-1036, Rev. 6, Instrument Installation 1LT-463
(d) S&W Drawing No. 13754.22-SK-1030, Rev. 4, Instrument Installation 1LT-471
(e) S&W Drawing No. 13754.22-SK-1029, Rev. 6, Instrument Installation 1LT-472
(f) S&W Drawing No. 13754.22-SK-1025, Rev. 4, Instrument Installation 1LT-473
(g) S&W Drawing No. 13754.22-SK-1171, Rev. 3, Instrument Installation 2LT-461
(h) S&W Drawing No. 13754.22-SK-1162, Rev. 2, Instrument Installation 2LT-462
(i) S&W Drawing No. 13754.22-SK-1165, Rev. 4, Instrument Installation 2LT-463
(j) S&W Drawing No. 13754.22-SK-1179, Rev. 3, Instrument Installation 2LT-471
(k) S&W Drawing No. 13754.22-SK-1173, Rev. 3, Instrument Installation 2LT-472
(l) S&W Drawing No. 13754.22-SK-1167, Rev. 3, Instrument Installation 2LT-473

5.1.2 Maintenance Procedures, Modification Request IC-259:

(a) ICP 11.34, Installation of 1LT-461
(b) ICP 11.35, Installation of 1LT-462
(c) ICP 11.36, Installation of 1LT-463
(d) ICP 11.43, Installation of 1LT-471
(e) ICP 11.44, Installation of 1LT-472
(f) ICP 11.45, Installation of 1LT-473

5.1.3 Maintenance Procedures, Modification Request IC-260:

(a) ICP 11.107, Installation of 2LT-461
(b) ICP 11.108, Installation of 2LT-462
(c) ICP 11.109, Installation of 2LT-463
(d) ICP 11.117, Installation of 2LT-471
(e) ICP 11.118, Installation of 2LT-472
(f) ICP 11.119, Installation of 2LT-473

Attachment B

5.2 Drawings and Procedures for Foxboro Model N-E11GM Pressure Transmitters:

5.2.1 Installation Drawings:

(a) S&W Drawing No. 13754.22-SK-1208, Rev. 4, Instrument Installation 1PT-429
(b) S&W Drawing No. 13754.22-SK-1211, Rev. 4, Instrument Installation 1PT-430
(c) S&W Drawing No. 13754.22-SK-1214, Rev. 4, Instrument Installation 1PT-431
(d) S&W Drawing No. 13754.22-SK-1054, Rev. 5, Instrument Installation 1PT-449
(e) S&W Drawing No. 13754.22-SK-1198, Rev. 3, Instrument Installation 2PT-429
(f) S&W Drawing No. 13754.22-SK-1201, Rev. 4, Instrument Installation 2PT-430
(g) S&W Drawing No. 13754.22-SK-1204, Rev. 4, Instrument Installation 2PT-431
(h) S&W Drawing No. 13754.22-SK-1182, Rev. 3, Instrument Installation 2PT-449

5.2.2 Maintenance Procedures, Modification Request IC-259:

(a) ICP 11.27, Installation of 1PT-429
(b) ICP 11.28, Installation of 1PT-430
(c) ICP 11.29, Installation of 1PT-431
(d) ICP 11.30, Installation of 1PT-449

5.2.3 Maintenance Procedures, Modification Request IC-260:

(a) ICP 11.300, Installation of 2PT-429
(b) IC P11.301, Installation of 2PT-430
(c) ICP 11.302, Installation of 2PT-431
(d) ICP 11.133, Installation of 2PT-449

5.3 Mounting Support Bracket for Model N-13DM Transmitters, Drawing No. 13754.22-SK-CA-002, Rev. 4, Wall Mounted Transmitter and Manifold Bracket (Attachment B)

5.4 Mounting Support Bracket for Model N-11GM Transmitters, Drawing No. 13754.22-SK-CA-001, Rev. 4, Wall Mounted Transmitter Bracket (Attachment C)

5.5 Foxboro Document QOAAC11, Rev. A, Qualification Test Report of N-E10 Series Transmitters for Class 1E Qualification (includes Wyle Laboratories Test Report 45592-4, Dated May 18, 1983)

5.6 Foxboro Document QOAAC12, Rev. D, Qualification by Similarity of N-E10 Series Transmitters per Qualification Tested N-E10 Series Transmitters

5.7 Foxboro Product Specification PSS 9-1B1 A, N-E11 and N-E13 Series Nuclear Electronic Pressure Transmitters, 1984 Issue

5.8 Screening Evaluation Work Sheets (SEWS) for Pressure Transmitters:

(a) SQ-000853, Component ID 1LT-461
(b) SQ-000854, Component ID 2LT-461
(c) SQ-000855, Component ID 1LT-462
(d) SQ-000856, Component ID 2LT-462

Attachment B

(e) SQ-000857, Component ID 1LT-463
(f) SQ-000858, Component ID 2LT-463
(g) SQ-000863, Component ID 1LT-471
(h) SQ-000864, Component ID 2LT-471
(i) SQ-000865, Component ID 1LT-472
(j) SQ-000866, Component ID 2LT-472
(k) SQ-000867, Component ID 1LT-473
(l) SQ-000868, Component ID 2LT-473
(m) SQ-000923, Component ID 1PT-429
(n) SQ-000924, Component ID 2PT-429
(o) SQ-000925, Component ID 1PT-430
(p) SQ-000926, Component ID 2PT-430
(q) SQ-000927, Component ID 1PT-431
(r) SQ-000928, Component ID 2PT-431
(s) SQ-000929, Component ID 1PT-449
(t) SQ-000930, Component ID 2PT-449

5.9 Excerpt from Foxboro Bulletin PL 008-548, Transmitters Seismic Mounting Assemblies (Attachment A)

5.10 Calculation NMB-132-CZC, Rev. 0, Seismic Analysis of Wall Mounted Pipe Stand for Foxboro Transmitters

5.11 Crane Co. Catalog No. 60, Valves and Fittings, 1960 Printing

5.12 AISC Manual of Steel Construction, 8TH Edition

Attachment B

6. CALCULATIONS

6.1 Natural Frequency of Support

Model N-E11GM transmitters 1/2PT-429, 430, 431, 449

As shown on Drawing No. 13754.22-SK-CA-001 (Reference 5.4, Attachment C), the actual support for these transmitters includes 2" Schedule 40 pipe. The pipe is welded to a plate, which in turn is anchored to the containment wall. The adequacy of the support is determined in Reference 5.10 calculation using the finite element model. The computer model was constructed with Model N-E13DH transmitter. Review of Reference 5.6 reveals that this model is the heaviest transmitter with the highest center of gravity; thus the computer model provides worse case conditions for analysis.

Two mounting arrangements were evaluated; one with transmitter mounted on the side of the support (Reference 5.10, Pages 14, 15), and one with transmitter mounted on the front of the support (Reference 5.10, Pages 17, 18). The calculated natural frequencies of two models are provided on Page 10 of reference calculation as follows:

- 36.7 Hz - instrument mounted on the side of the support
- 34.9 Hz - instrument mounted on the front of the support

The calculated frequencies of support are greater than the 20 Hz cut-off frequency indicated on the seismic demand spectra; thus the support is rigid.

Model N-E13DM transmitters 1/2LT-461, 462, 463, 471, 472, 473

As shown on Drawing No. 13754.22-SK-CA-002 (Reference 5.3, Attachment B), the actual support for these transmitters includes 4" x 4" x ¼" structural steel box. The box is welded to a plate, which in turn is anchored to the containment wall. This box support is evaluated by comparison to the pipe support modeled in Reference 5.10 calculation.

Support Configuration	Cross Section Area	Moment of Inertia	Support Length
2" Schedule 40 Pipe	1.08 in^2 (Ref. 5.11)	0.67 in^3 (Ref. 5.11)	12" (Ref. 5.10)
4" x 4" x ¼" Box	3.59 in^2 (Ref. 5.12)	8.22 in^3 (Ref. 5.12)	12" (Ref. 5.3)

The comparison of section properties indicates that 4" x 4" x ¼" box is more rigid than 2" Schedule 40 pipe. Also, the length of support is same as the one modeled in Reference 5.10 calculation. Thus, it is concluded that the frequency of 4" x 4" x ¼" support is greater than the 20 Hz cut-off frequency indicated on the seismic demand spectra, and the support is rigid.

Attachment B

6.2 Seismic Demand / Seismic Capacity Comparison

As indicated above, the frequency of the wall-mounted supports is in the rigid range. Thus, the seismic demand for equipment qualification is the RRS for containment building wall.

The minimum qualified G-levels (Reference 5.5, Page VIII-31) are:

	OBE	SSE
Horizontal:	4.3 g ZPA	6.6 g ZPA
Vertical:	1.9 g ZPA	3.9 g ZPA

From the floor RRS (Reference 5.8), the maximum peak acceleration is 0.9 g. This RRS peak acceleration is enveloped by the test minimum ZPA with more than 10% margin. Therefore, the test response spectra (TRS) from the qualification report envelop the required response spectra (RRS).

6.3 Acceptable Accuracy Limits

The seismic tests were conducted in accordance with detailed procedures as described on Pages VIII-2, VIII-3 and VIII-4 of Reference 5.5. During the entire seismic simulation period, the transmitters were energized, as applicable, and pressurized to 75% of their calibrated span. The input and output voltage were continuously monitored. The 5-point calibration check was performed prior to, three times during, and at the completion of the seismic tests. Each span point shift was calculated using the pre-seismic calibration check data as a baseline.

No anomalies occurred during seismic testing which would have affected performance and/or integrity of the transmitters. Results for the tested transmitters indicate that for all tested transmitters the outputs had shifted by less than +/-1% of calibrated span (Reference 5.5, Page VIII-33). This data is included in the Attachment D of the calculation.

Attachment B

7. CONCLUSION

As shown in Section 6.1 of the calculation, the frequencies of the wall-mounted instrument supports are greater than the 20 Hz cut-off frequency indicated on the seismic demand spectra provided by Screening Evaluation Work Sheets; thus the supports are rigid.

As shown in Section 6.2 of the calculation, the RRS peak acceleration is enveloped by the test minimum ZPA with more than 10% margin.

No anomalies occurred during seismic testing which would have affected performance and/or integrity of the transmitters. Since the test results envelop the seismic requirements, the anticipated output shift for the subject transmitters is +/-1% of calibrated span.

Attachment B

Calculation No.: 2006-16540	Revision: 0	Attachment A Page A1/Final

PL 008-548
Page 4

Seismic Mounting Assemblies

Horizontal Pipe Mounting

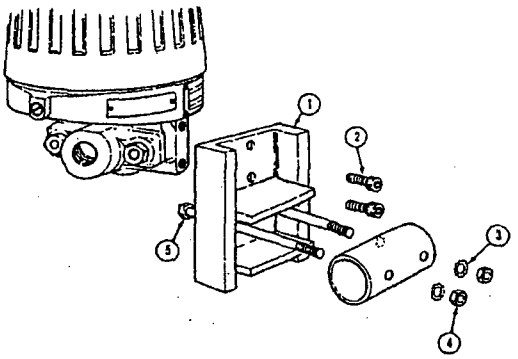

Figure E2334A

Item	Part No.		Qty.	Part Name
—	N0150RG		—	Horizontal Pipe Mounting Kit
1	N0150RK	(+)	1	Mounting Bracket
2	X0134EM		2	Screw, Socket H., 0.375-24 x 1.000
3	0041724		2	Lockwasher
4	X0124CD		2	Nut, 0.375-16
5	X0100LS		2	Screw, Hex H., 0.375-16 x 5.000

Vertical Pipe Mounting

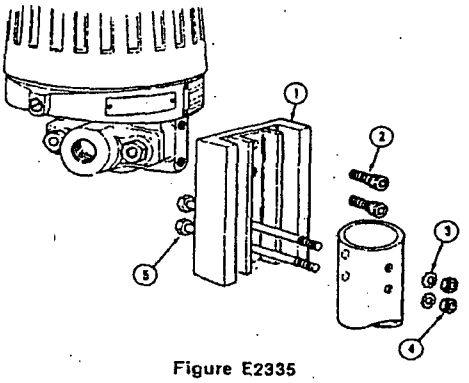

Figure E2335

Item	Part No.		Qty.	Part Name
—	N0150RH		—	Vertical Pipe Mounting Kit
1	N0150RL	(+)	1	Bracket Assembly
2	X0172YR		2	Screw, Socket H., 0.375-24 x 1.250
3	0041724		2	Lockwasher
4	X0142CD		2	Nut, 0.375-16
5	X0137XF		2	Screw, Hex H., 0.375-16 x 4.500

(+)Title 10, Code of Federal Regulation, Part 21 (10CFR-21) applies only to these parts. All other parts are commercial grade.

*Parts preceded by asterisks are recommended spare parts.
For quantities see RSPL 008-548.

Aminco is a trademark of American Instrument Company.
Lubriplate is a trademark of Lubriplate Division of Fiske Brothers Refining Company.
Viton is a trademark of E.I. duPont de Nemours and Company.

Attachment B

Calculation No.: 2006-16540	Revision: 0	Attachment B Page B1/Final

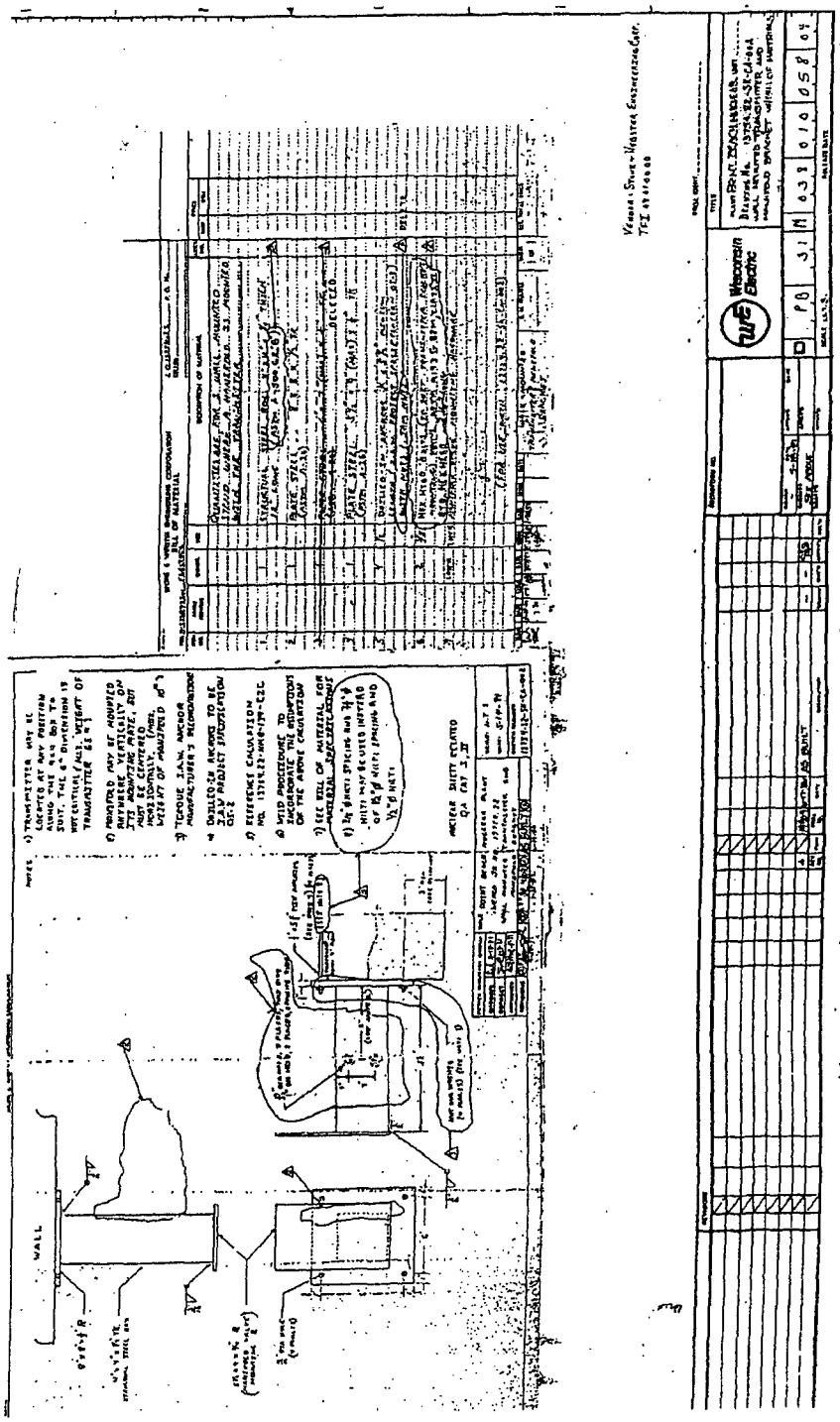

Attachment B

Calculation No.: 2006-16540	Revision: 0	Attachment C Page C1/Final

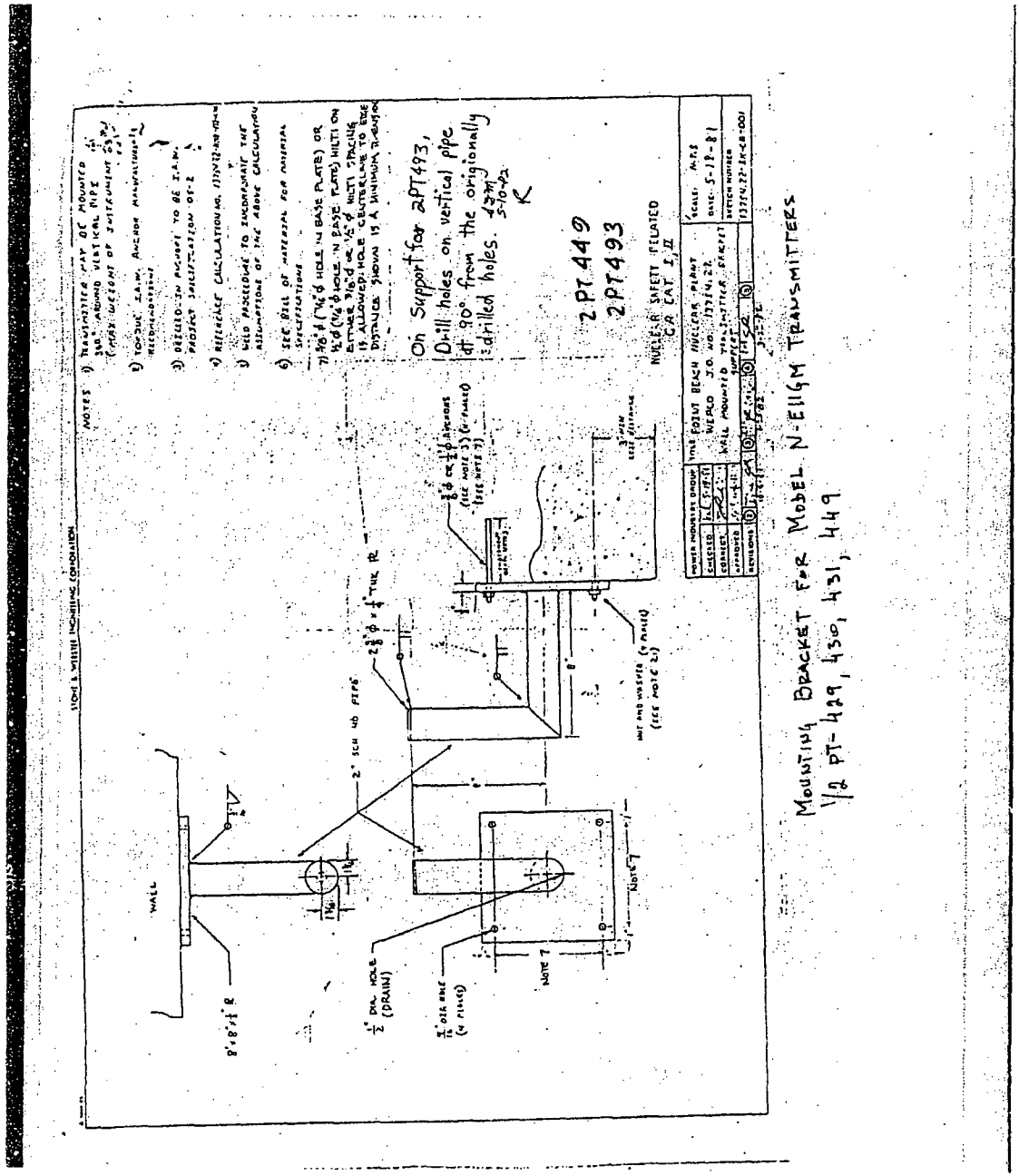

Attachment B

Test Sep 01-No. 45592-4
Page No VIII-33

TABLE VI (1-3)

TRANSMITTER ERROR AND SPAN SHIFT
GENERIC SEISMIC TESTS

I.D. NO.	% OF SPAN	PRE-SEISMIC	5-OSE TESTS IN EACH AXIS UP	% ERROR	5-OSE TESTS DOWN	% ERROR	5-OSE TESTS AVERAGE	% ERROR AND SPAN SHIFT	1-SSE TEST IN EACH AXIS RUN 1 UP	% ERROR	1-SSE TEST RUN 1 DOWN	% ERROR	1-SSE TEST RUN 2 UP	% ERROR	1-SSE TEST RUN 2 DOWN	% ERROR	1-SSE TEST RUN 3 UP	% ERROR	1-SSE TEST RUN 3 DOWN	% ERROR	1-SSE TEST AVERAGE	% ERROR AND SPAN SHIFT
	0	0.962	0.970	0.20	0.963	0.02	0.967	0.12	0.964	0.05	0.959	-0.01	0.959	-0.07	0.960	0.17	0.969	0.17	0.964	0.05	0.964	0.05
	25	1.973	1.913	0.13	1.974	0.16	1.974	0.16	1.982	0.35	1.974	0.16	1.983	0.30	1.978	0.25	1.973	0.13	1.974	0.16	1.977	0.21
F1	50	2.972	2.970	-0.09'	2.972	-0.04	2.971	-0.06	2.976	0.06	2.978	0.11	2.977	0.09	2.976	0.06	2.977	0.09	2.8110	0.16	2.971	0.09
	75	3.971	3.97')	-0.01	3.961	-0.45	3.970	-0.13	3.978	-0.03	3.976		3.976	-0.08	3.983	-0.40	3.973	-0.18	3.972	-0.18	3.973	-0.16
	100	4.985	4.986	0.02	-		4.986	0.02	4.986	0.27			4.986	0.02			4.919	0.10			4.990	0.12
	SPAN	4.023					4.019	-0.10	-			-			-	-				-	4.026	0.07
	0	1.003	0.999	-0.10	1.000	-0.08	1.000	-0.00	0.994	-0.23	0.993	-0.25	0.993	-0.25	0.997	-0.28	0.992	-0.28	0.993	-0.25	0.993	-0.25
	25	2.025	2.073	0.51	2.031	0.46	2.022	0.61	2.015	0.31	2.018	0.34	2.016	0.34	2.017	0.36	2.017	0.36	2.018	0.39	2.017	0.36
F2	50	3.031	3.028	0.65	3.077	0.63	3.028	0.65	3.019	0.43	3.020	0.45	3.019	0.43	3.021	0.48	3.022	0.50	3.021	0.48	3.020	0.45
	75	4.021	4.020	0.48	4.017	0.39	4.019	0.44	4.012	0.26	4.011	0.24	4.008	0.19	4.010	0.21	4.010	0.21	4.011	0.24	4.011	0.24
	100	5.001	5.000	-0.03	-		5.000	-0.03	4.993	-0.20			4.990	-0.28			4.980	-0.30			4.991	-0.25
	SPAN	3.998					4.000	0.05	-						-	-					3.998	0.00
	0	0.996	0.998	0.00	0.985	0.28	0.996	0.00	0.996	0.00	0.997	-0.03	0.997	-0.03	0.996	0.00	0.996	0.00	0.997	-0.03	0.997	
	25	2.000	2.001	-0.21	2.000	-0.18	2.001	-0.21	2.001	-0.21	2.001	-0.21	2.001	-0.21	2.000	-0.18	2.001	-0.21	2.001	-0.21	2.001	-0.21
F3	50	2.998	2.991	-0.04	2.990	-0.01	2.991	-0.04	2.992	-0.08	2.992	-0.08	2.993	-0.08	2.991	-0.04	2.992	-0.06	2.991	-0.04	2.992	-0.06
	75	3.983	3.984	0.06	3.9213	0.00	3.984	0.06	3.985	0.03	3.985	0.03	3.985	0.03	3.985	0.03	3.985	0.03	3.984	0.06	3.985	0.03
	100	4.983	4.9115	-0.05	-		4.985	-0.05	4.905	-0.05			4.505	-0.05			4.986	-0.08			4.985	-0.05
	SPAN	3.987					3.909	0.05	-						-	-					3.908	0.03
	0	0.998	0.993	-0.12	0.993	-0.12	0.993	-0.12	0.991	-0.17	0.991	0.17	0.991	-0.17	0.981	-0.17	0.991	-0.11	0.991	-0.11	0.991	-0.17
	25	2.004	2.000	0.04	2.000	0.04	2.000	0.04	1.998	-0.01	1.998	-0.01	1.999	0.02	1.998	-0.01	1.998	-0.01	1.998	-0.01	1.998	-0.01
F4	50	3.010	3.007	0.21	3.008	0.19	3.007	0.21	3.004	0.14	3.003	0.11	3.003	0.10	3.003	0.11	3.004	0.14	3.003	0.11	3.004	0.14
	75	4.009	4.007	0.21	4.008	0.18	4.007	0.21	4.005	0.16	4.003	0.11	4.005	0.16	4.003	0.11	4.004	0.13	4.003	0.11	4.004	0.12
	100	4.999	4.996	-0.07	-		4.996	-0.07	4.993	-0.15			4.993	-0.15			4.993	-0.15			4.993	-0.15
	SPAN	4.001		-	-		4.003	0.05	-												4.002	0.02
	0	0.904	0.985	0.02	0.905	0.02	0.965	0.02	0.984	0.00	0.984	0.00	0.984	0.00	0.984	0.00	0.984	0.00	0.985	0.02	0.984	0.00
	25	2.000	2.007	0.28	2.000	0.23	2.001	0.25	2.004	0.33	2.001	0.25	2.004	0.33	2.001	0.25	2.004	0.33	2.002	0.28	2.003	0.30
F5	50	3.011	3.015	0.43	3.012	0.38	3.014	0.41	3.018	0.51	3.013	0.43	3.018	0.51	3.015	0.43	3.019	0.53	3.015	0.43	3.017	0.48
	75	4.016	4.021	0.42	4.018	0.34	4.020	0.38	4.026	0.54	4.023	0.47	4.025	0.52	4.023	0.47	4.028	0.54	4.024	0.49	4.025	0.52
	100	5.011	5.018	0.12	-		5.018	0.12	5.022	0.27			5.022	0.27			5.023	0.30			5.027	0.27
	SPAN	4.027					4.031	0.10	-						-	-					4.030	0.27

NOTE: Outputs are in VDC.
% Error is % of calibrated span.

*All span point voltages are averaged from the 3-run calibration check.

Attachment C

ASIF MOHIUDDIN/Sargentlundy
08/15/2006 10:19 AM

To ASIF MOHIUDDIN/Sargentlundy,
cc
bcc
Subject Fw: Telecon

"Francis, Robert" <Robert.Francis@wylelabs.com>
08/14/2006 04:02 PM

To <ASIF.MOHIUDDIN@sargentlundy.com>
cc
Subject RE: Telecon

I agree with your telecon summary. Please note that the review of the test report was performed in a very short time period. However, based on the review, the information you provided is accurate to the best of my knowledge.

RF

-----Original Message-----
From: ASIF.MOHIUDDIN@sargentlundy.com
[mailto:ASIF.MOHIUDDIN@sargentlundy.com]
Sent: Monday, August 14, 2006 3:57 PM
To: Francis, Robert
Subject: Fw: Telecon

Hello Robert,

Greetings!

Thank you very much for helping us out with the antique Wyle Report on the
Foxboro transmitters. I admire the retrievability of your system. I would
appreciate if you review the following regarding our telecon on Friday, 8/11/2006, about the assessment of LOCA/HELB Temperature Effect for Foxboro
Pressure-Type Transmitters.

Wyle Laboratories Test Report 45594-2, dated May 18, 1983, and Test Procedure 45592-2, dated July 1, 1981, document the environmental qualifications for Foxboro N-E10 series transmitters (which includes the N-E11GM and N-E13DM series transmitters). The sequence of transmitter testing is performed in accordance with the procedures contained in Section
11 of the report. ' After reviewing the procedure and the sequence in which
the transmitters were tested, it is concluded that the given LOCA/HELB

Attachment C

Temperature Effect of +/- 8% in Foxboro Corporate Product Specification includes the radiation effect.

Please confirm this telecon by e-mail.

Thanks,

Attachment D

PART 1 - WALKDOWN REQUEST FORM

Calculation No. PBNP-IC-12

Walkdown Location (Bldg/Elev/Room/Column Lines)
Control Building / Elevation 44' 0" / Control Room, CB 1(2)C04

Scope

1. Determine the minor division of the following Pressurizer Pressure indicators on Control Board C04.

- 1PI-429
- 1PI-430
- 1PI-431
- 1PI-449A
- 2PI-429
- 2PI-430
- 2PI-431
- 2PI-449A

References:

Data Tolerance Requirements

S&L Lead W. Barasa Signature W A Barasa Date 8-26-06

Attachment D

PART 2 - WALKDOWN DATA COLLECTION FORM

The minor division for the following indicators is 20 psig.

1PI-429
1PI-430
1PI-431
1PI-449A
2PI-429
2PI-430
2PI-431
2PI-449A

[illegible]	[signature]	[illegible]
Data Taker Name	Signature	Date
Robert L. Marsh	Robert L Marsh	8-26-06
Independent Verifier Name	Signature	Date

Attachment E

Pressurizer Pressure Analytical Limits

The pressurizer pressure instrumentation channels are credited with the following reactor protection system (RPS) or engineered safety feature actuation system (ESFAS) functions:

- Low pressurizer pressure reactor trip
- High pressurizer pressure reactor trip
- Low pressurizer pressure safety injection
- Pressurizer pressure safety injection block/unblock

The following discussion addresses Analytical Limits that are applied to each function in the plant accident analyses. For the two reactor trip functions, a separate discussion of the current and EPU Analytical Limits is provided, so that Limiting Trip Setpoints can be determined for both the current and post-EPU conditions. Post-EPU Limiting Trip Setpoints are needed to support the EPU license amendment request (LAR).

A. Low Pressurizer Pressure Reactor Trip - Current

The low pressurizer pressure reactor trip is credited as a primary trip in two accident analyses (Ref. G.12):

1. Dropped Rod
2. Small break loss of coolant accident (SBLOCA)

This trip is also considered a backup/anticipatory trip for several other events. Process limits for the low pressurizer pressure reactor trip are provided for three such events.

3. Steam line break inside containment (SLB (IC))
4. Steam line break outside containment (SLB (OC))
5. Steam generator tube rupture (margin to overfill)

There are two additional constraints placed on the low pressurizer pressure reactor trip:

6. Limit the range of ΔT protection
7. Margin to trip

Each of these will be discussed in turn.

1. Dropped Rod

The analytical limit provided is 1830 psia. No process sensor functional time is provided (Ref. G.12).

The dropped rod event does not involve any significant release of mass or energy to containment. Therefore, only normal containment environmental conditions need to be considered when evaluating the setpoint with respect to this analytical limit.

Attachment E

2. SBLOCA

The analytical limit provided is 1648 psig. No process sensor functional time is provided (Ref. G.12).

An SBLOCA is expected to involve significant releases of mass and energy to the containment, which could affect the containment environmental conditions. Reference G.56 provides the post-accident containment environmental conditions for the low pressurizer pressure safety injection function. These same conditions should be used in evaluating the low pressurizer pressure reactor trip setpoint with respect to the above analytical limit.

3. Steam line break inside containment (SLB (IC))

The process limit provided is 1775 psia. No process sensor functional time is provided (Ref. G.12).

In the analysis of a steam line break inside containment (Ref. C.12), multiple reactor trip signals are used as inputs. The results of the analysis show that the reactor trip is actuated by the high containment pressure safety injection signal. Since the low pressurizer pressure reactor trip signal did not produce the reactor trip—and, therefore, is not credited as the primary trip in this accident analysis—it functions as a backup trip. Hence, although the value of 1775 psia was used as an input to the analysis, this value should not be used in determining the limiting trip setpoint (LTSP).

Furthermore, because, in this case, the signal functions as a backup trip and because the low pressurizer pressure reactor trip field trip setpoint (FTSP) historically has been set at a value greater than this process limit of 1775 psia, it is not necessary to give further consideration to this process limit.

4. Steam line break outside containment (SLB (OC))

The process limit provided is 1775 psia. No process sensor functional time is provided (Ref. G.12).

In the analysis of a steam line break outside containment (Ref. G.51), multiple reactor trip signals are used as inputs. The results of the analysis show that the reactor trip is actuated by either the power range high flux, the overpower ΔT, the overtemperature ΔT, or the low-low steam generator level signals. Since the low pressurizer pressure reactor trip signal did not produce the reactor trip—and, therefore, is not credited as the primary trip in this accident analysis—it functions as a backup trip. Hence, although the value of 1775 psia was used as an input to the analysis, this value should not be used in determining the limiting trip setpoint (LTSP).

5. Steam generator tube rupture (SGTR (margin to overfill))

Reference G.14 indicates that the low pressurizer pressure reactor trip functions as a backup/anticipatory trip for the SGTR (margin to overfill) analysis and that the process limit is 1905 psig. No process sensor functional time is provided.

The margin to overfill analysis for a steam generator tube rupture (Ref. C.13) is not a licensing basis analysis. Rather, it is a "better estimate" analysis performed to support validation of the emergency operating procedures, and it uses nominal values for setpoints and other process parameters.

Since (1) the PBNP margin to overfill analysis is not a licensing basis analysis, (2) nominal values are used, and (3) the low pressurizer reactor trip is not the primary trip, the process limit of 1905 psig should

Attachment E

not be used in establishing the limiting trip setpoint for the low pressurizer pressure reactor trip. Therefore, this limit need not be considered further.

6. Limit the range of ΔT protection

The low pressurizer pressure reactor trip limits the range of required protection from the overpower and overtemperature ΔT trips, as discussed in FSAR 7.2.3.1(Ref. G.3). The low pressurizer pressure reactor trip value used for this function is 1775 psia, as shown in FSAR Table 14.0-3 and FSAR Figure 14.0-1 (Ref. G.3).

Since none of the events for which the ΔT trips are credited as primary trips involves any significant release of mass or energy to containment, only normal containment environmental conditions would need to be considered when evaluating the low pressurizer pressure reactor trip setpoint with respect to this limit. However, since this limit is bounded by (i.e., is less than) the analytical limit for the dropped rod event (1830 psia), this limit need not be considered further.

7. Margin-to-trip

In order to avoid unnecessary challenges to the reactor protection system, several design basis transients, during which the reactor should not trip, are evaluated to show that there is margin between the peak (maximum or minimum) transient value of pressurizer pressure and the reactor trip setpoint (Section 6.1 of Ref. G.52). The minimum pressurizer pressure during the most limiting event is 2136 psia.

Therefore, in order to avoid unnecessary challenges to the reactor protection system, the plant setpoint plus an allowance for instrument uncertainty under normal containment environmental conditions should be lower than this value.

8. Summary of low pressurizer pressure reactor trip considerations

The following analytical limits must be considered in establishing the limiting trip setpoint. For each limit, the appropriate environmental conditions must be included in the setpoint evaluation.

- Dropped rod: 1830 psia, normal containment environment
- SBLOCA: 1648 psig, post-accident containment environment, based on Reference G.56

The setpoint plus instrument uncertainty under normal containment environmental conditions should also remain below the following:

- Margin-to-trip: 2136 psia

B. <u>Low Pressurizer Pressure Reactor Trip</u> - EPU

In addition to the discussion above for the current power level, the Extended Power Uprate project accident analyses are revising the Analytical Limits for some setpoints to adjust to the higher reactor power level. An OPTOAX analysis for Extended Power Uprate [Westinghouse calculation CN-TA-08-22 Revision 0] establishes an analysis limit on the low pressurizer pressure reactor trip function at 1855 psia (1840 psig) [References G.59 and C.1]. For the low pressurizer pressure reactor trip function, this value is more restrictive for setpoint determination than the current power level Analytical Limit of 1830 psia.

Attachment E

[Note: Revision 1 of CN-TA-08-22 (Reference C.2) was also issued for EPU, but does not require any change to the 1855 psia Analytical Limit for the low pressurizer pressure reactor trip function established in Revision 0.]

A new analysis for steam line break (outside containment) mass and energy releases was performed for EPU under CN-CRA-08-19 Revision 2 [Reference C.19]. The calculation assumed that a low pressurizer pressure reactor trip would occur at 1855 psia (1840 psig). This analysis limit is the same value assumed for the low pressurizer pressure reactor trip limit in the OPTOAX analysis.

Regarding which environmental conditions to apply to the uncertainties for the revised Analytical Limit, page 13 of CN-TA-08-22 Rev 0 states that it is expected that either OTDT or OPDT will be credited in the analyses of the following three accidents:

- Uncontrolled RCCA Withdrawal at Power
- Loss of Load/Turbine Trip
- Steam Line Break at Power

For the low pressurizer pressure reactor trip function to be credited as a restriction for the OPTOAX analysis, the most restrictive containment environment occurring under these three accidents should also be applied to the low pressurizer pressure reactor trip function.

Of the three accidents above, an RCCA Withdrawal and a Loss of Load will not produce an adverse containment environment. Only a steam line break inside containment would produce an abnormal containment environment. However, the same justification given in Attachment F of this calculation for using normal containment uncertainties for the SI actuation function can also be applied to the reactor trip function. The Foxboro transmitters that provide the pressurizer pressure signal will respond to a low RCS pressure condition rapidly during a steam line break before the transmitter electronics is affected by an elevated containment temperature caused by the steam line break.

For the same reasons given in Attachment F, a normal containment environment can be applied to the loop uncertainties for the purpose of determining the total loop error for the low pressurizer pressure reactor trip Limiting Trip Setpoint.

Margin-to-Trip

Westinghouse Calculation CN-CPS-08-20 [Reference C.20] determined that normal operational transients under EPU conditions would not cause a low pressurizer pressure reactor trip, with margin. Refer to the calculation for the specific margin provided for different transients.

C. <u>High Pressurizer Pressure Reactor Trip</u> - Current

The high pressurizer pressure reactor trip is credited as a primary trip in one accident analysis (Ref. G.12):

1. Loss of load

This trip is also considered a backup/anticipatory trip for several other events. However, no process limits for the high pressurizer pressure reactor trip are provided for these events.

Attachment E

There are two additional constraints placed on the high pressurizer pressure reactor trip:

2. Limit the range of ΔT protection
3. Margin to trip

Each of these will be discussed in turn.

1. Loss of load

The analytical limit provided is 2425 psia. The process sensor functional time provided is 6.4 seconds (Ref. G.12).

The loss of load event does not involve any significant release of mass or energy to containment. Therefore, only normal containment environmental conditions need to be considered when evaluating the setpoint with respect to this analytical limit.

2. Limit the range of ΔT protection

The high pressurizer pressure reactor trip limits the range of required protection from the overpower and overtemperature ΔT trips, as discussed in Reference FSAR 7.2.3.1(Ref. G.3). The high pressurizer pressure reactor trip value used for this function is 2425 psia, as shown on FSAR Table 14.0-3 and FSAR Figure 14.0-1 (Ref. G.3).

Since none of the events for which the ΔT trips are credited as primary trips involves any significant release of mass or energy to containment, only normal containment environmental conditions would need to be considered when evaluating the high pressurizer pressure reactor trip setpoint with respect to this limit. However, since this limit and the associated environmental conditions are the same as the analytical limit and environmental conditions for the loss of load event (2425 psia), the ΔT protection limit need not be considered further.

3. Margin-to-trip

In order to avoid unnecessary challenges to the reactor protection system, several design basis transients, during which the reactor should not trip, are evaluated to show that there is margin between the peak (maximum or minimum) transient value of pressurizer pressure and the reactor trip setpoint (Section 6.1 of Ref. G.52). The maximum pressurizer pressure during the most limiting event is 2351 psia.

Therefore, in order to avoid unnecessary challenges to the reactor protection system, the plant setpoint minus an allowance for instrument uncertainty under normal containment environmental conditions should be higher than this value.

4. Summary of high pressurizer pressure reactor trip considerations

The following analytical limit must be considered in establishing the limiting trip setpoint. The appropriate environmental conditions must be included in the setpoint evaluation.

- Loss of load: 2425 psia, normal containment environment

Attachment E

The setpoint minus instrument uncertainty under normal containment environmental conditions should also remain above the following:

- Margin-to-trip: 2351 psia

D. <u>High Pressurizer Pressure Reactor Trip</u> - EPU

In addition to the discussion above for the current power level, the Extended Power Uprate project is revising the accident analysis for Loss of Load [Westinghouse calculation CN-TA-08-60 Revision 0] to credit the high pressurizer pressure reactor trip function as a primary trip occurring at a lower pressure of 2418 psia (2403 psig) [References G.59 and C.18]. For the high pressurizer pressure reactor trip function, this value is more restrictive for setpoint determination than the current power level LOL Analytical Limit of 2425 psia.

Regarding which environmental conditions to apply to the uncertainties for the revised Analytical Limit, the Loss of Load event does not create an abnormal containment environment. Therefore, normal containment environmental parameters can be used to determine the total loop error for the high pressurizer pressure reactor trip Limiting Trip Setpoint.

Margin-to-Trip

Westinghouse Calculation CN-CPS-08-20 [Reference C.20] determined that normal operational transients under EPU conditions would not cause a high pressurizer pressure reactor trip, with margin. Refer to the calculation for the specific margin provided for different transients.

E. <u>Low Pressurizer Pressure Safety Injection</u>

The low pressurizer pressure safety injection actuation is credited as a primary trip in the following accident analyses (Ref. G.12):

1. Rupture of a steam pipe (with 1 loop in service – core response)
2. Steam line break outside containment
3. Small break loss of coolant accident (SBLOCA)
4. Large break loss of coolant accident (LBLOCA)
5. LOCA mass and energy release for pumped safety injection
6. Steam generator tube rupture (SGTR)

This actuation is also considered a backup/anticipatory trip for the following event, and a process limit is provided.

7. Steam line break inside containment

Each of these will be discussed in turn.

1. Rupture of a steam pipe (with 1 loop in service – core response)

The analytical limit provided is 1640 psia. A note in Reference G.14 explains that although a value of 1663 psia was used in the analysis, it has been confirmed that the results would not be adversely impacted if the setpoint were 1640 psia. Therefore, the analytical limit for this event is considered to be 1640 psia

Attachment E

The process sensor functional time provided is 20.7 seconds. A note in Reference G.14 explains that this time is based on the modeled setpoint of 1663 psia and that the limiting point in the analysis occurs prior to this time. Reference G.56 provides the post-accident containment environmental conditions for the low pressurizer pressure safety injection function.

However, this analytical limit (1640 psia) is the same as the analytical limit for the SBLOCA case, discussed below. Since (1) the analytical limit for the rupture of a steam pipe (with 1 loop in service – core response) is the same as the analytical limit for the SBLOCA case and (2) the setpoint evaluation for the SBLOCA case will also incorporate the instrument uncertainties associated with post-accident containment environmental conditions, the rupture of a steam pipe – core response case is considered to be enveloped by the SBLOCA case.

2. Steam line break outside containment (SLB (OC))

The analytical limit provided is 1663 psia. The process sensor functional time provided is 333 seconds (Ref. G.12)

Since the break is outside containment, the containment environmental conditions would remain normal for the first 333 seconds of the event. Therefore, the instrument uncertainties used in evaluating the setpoint with respect to this analytical limit should include normal containment environmental conditions.

3. SBLOCA

The analytical limit provided is 1625 psig. No process sensor functional time is provided (Ref. G.12).

An SBLOCA is expected to involve significant releases of mass and energy to the containment, which could affect the containment environmental conditions. Reference G.56 provides the post-accident containment environmental conditions for the low pressurizer pressure safety injection function. These conditions should be used in evaluating the low pressurizer pressure safety injection setpoint with respect to the above analytical limit.

4. LBLOCA

The analytical limit provided is 1625 psig. No process sensor functional time is provided (Ref. G.12).

An LBLOCA is expected to involve significant releases of mass and energy to the containment, which could affect the containment environmental conditions. Reference G.56 provides the post-accident containment environmental conditions for the low pressurizer pressure safety injection function. However, the analytical limit for the LBLOCA (1640 psig) is the same as the analytical limit for the SBLOCA case, discussed above. Since (1) the analytical limit for the LBLOCA is the same as the analytical limit for the SBLOCA case and (2) the setpoint evaluation for the SBLOCA case will incorporate the larger instrument uncertainties associated with post-accident containment environmental conditions, the LBLOCA case is considered to be enveloped by the SBLOCA case

5. LOCA mass and energy release for pumped safety injection

Attachment E

Reference G.14 indicates that the low pressurizer pressure safety injection setpoint functions as a primary trip for the LOCA mass and energy release analysis and that the analytical limit is 1700 psia. No process sensor functional time is provided (Ref. G.12).

However, for the following reasons, the 1700 psia value is not a true analytical limit.

Reference G.14 cites several source documents for this item, including WEP-97-522 (Ref. G.33), WEP-05-209 (Ref. G.20), and WEP-05-283 (Ref. G.38). The current LOCA mass and energy release analysis and the current containment integrity analysis are documented in References G.33, G.20 and G.38 and provide confirmation that varying certain plant parameters has no effect on the results of the two analyses.

The LOCA mass and energy release analysis provides input to the containment integrity analysis. References G.20 and G.38 both state that the results and conclusions of Reference G.33 are based on Westinghouse evaluation models which did not credit condensation of steam in Reactor Coolant System (RCS) by the SI or limit energy release to the containment based on SI performance. Thus, SI merely serves as a mechanism to transfer the core energy to the containment as it is produced. Therefore, reductions in SI due either to flow reductions or delays in delivery, would result in less mass and energy release to the containment resulting in a reduction in the calculated peak pressure. Therefore, any increase in the time for the ECCS pumps to reach full speed will have no effect on the results and conclusions presented in Reference G.33.

Normally, if a protection setpoint is actuated by a decreasing process parameter, moving the setpoint lower *increases* the challenge to a safety limit. An allowance for instrument uncertainty is added to the analytical limit to establish a limiting trip setpoint, which ensures the protection function is actuated in time to protect the safety limit. However, in this case, moving the setpoint lower—which would delay the delivery of safety injection—*reduces* the challenge to a safety limit (viz., the containment design pressure and design temperature). Therefore, it is not appropriate to add instrument uncertainty to this analytical limit and then use the result to establish a limiting trip setpoint.

The LOCA mass and energy release analysis was done a long time ago and reflects a Westinghouse methodology that has since been replaced by a more current methodology. Nevertheless, the analysis remains the PBNP analysis of record. It appears that the 1700 psia "analytical limit" represents a nominal setpoint selected for use in the analysis. Because of how safety injection is modeled in the analysis—in particular, the fact that no credit is taken for limiting the energy release to the containment based on the performance of the safety injection system—a lower value for the setpoint in the analysis under this methodology does not adversely impact the mass and energy release results.

Therefore, the analytical limit used in the LOCA mass and energy release analysis is considered a nominal value, which should not be used in establishing the limiting trip setpoint. In addition, the use of the value of 1700 psia in the LOCA mass and energy release analysis should not impose any limit or restriction on the plant setpoint.

6. Steam generator tube rupture (SGTR)

Reference G.14 indicates that the low pressurizer pressure safety injection actuation functions as a primary trip for the SGTR analysis. Neither a specific analytical limit nor a process sensor functional time is provided (Ref. G.12). However, the following note is provided by Westinghouse:

Attachment E

> "The SGTR hand calculation methodology assumes reactor trip and SI actuation occur simultaneously, and models post-trip steam releases until 30 minutes past break. The Point Beach SGTR hand calculation analyzes a range of low pressurizer pressure SI actuation setpoints between 1715 psig and 1865 psig to bound the operational setpoint. A lower SI actuation setpoint causes a later reactor trip, resulting in higher break flow. A higher SI actuation setpoint causes an earlier reactor trip, resulting in higher post-trip steam releases. Both high break flow and high post-trip steam releases are conservative for the SGTR radiological analysis. If the SI actuation operational setpoint is within the range analyzed, then the SGTR analysis remains valid."

The relevant requirement here is that the actual plant ("operational") setpoint be maintained no lower than 1715 psig. As explained in Reference C.14, Appendix C:

> "In the SGTR analysis methodology utilized for the Point Beach Units 1 and 2 analysis, reactor trip and safety injection actuation are assumed to occur simultaneously, and can be assumed to occur at the reactor trip setpoint or the safety injection setpoint. The nominal Technical Specification values for the low pressurizer pressure safety injection and reactor trip setpoints without uncertainty are used in this methodology. Thus, the range of values proposed for the low pressurizer pressure safety injection setpoint represents the range between the nominal safety injection and reactor trip setpoints. The application of this SGTR analysis methodology based on using the nominal Technical Specification values is considered to provide appropriately conservative results and has been accepted by the NRC ..."

Therefore, this value of 1715 psig is considered a nominal value, which should not be used in establishing the limiting trip setpoint. However, to ensure the plant configuration remains consistent with the analyses of record, the field trip setpoint (FTSP) must be no less than 1715 psig.

7. Steam line break inside containment (SLB (IC))

The process limit provided is 1663 psia. No process sensor functional time is provided (Ref. G.12).

In the analysis of a steam line break inside containment (Ref. C.12), all three automatic safety injection signals—high containment pressure, low pressurizer pressure, and low steam line pressure—were used as inputs. The results of the analysis show that safety injection is actuated by the high containment pressure safety injection signal. Since the low pressurizer pressure safety injection signal did not produce the reactor trip—and, therefore, is not credited as the primary trip in this accident analysis—it functions as a backup trip. Hence, although the value of 1663 psia was used as an input to the analysis, this value should not be used in determining the limiting trip setpoint (LTSP).

Furthermore, because, in this case, the signal functions as a backup trip and because the low pressurizer pressure safety injection field trip setpoint (FTSP) historically has been set at a value greater than this process limit of 1663 psia, it is not necessary to give further consideration to this process limit.

8. Summary of low pressurizer pressure safety injection considerations

The following analytical limits must be considered in establishing the limiting trip setpoint. For each limit, the appropriate environmental conditions must be included in the setpoint evaluation.

- SBLOCA: 1625 psig, post-accident containment environment, based on Reference G.56

Attachment E

- SLB (OC): 1663 psia, normal containment environment

The setpoint should also be no lower than the following:

- SGTR: 1715 psig

F. Low Pressurizer Pressure Safety Injection – EPU

Reference G.59 provides the updated safety analysis limits for EPU. For the Low Pressurizer Pressure SI function, Reference G.59 provides two new EPU analysis limits. Westinghouse Small Break LOCA calculation CN-LIS-08-15 Revision 1 [Reference C.16] assumes SI actuation occurs at 1633 psia. Westinghouse Best Estimate Large Break LOCA calculation CN-LIS-08-15 Revision 0 [Reference C.17] assumes SI actuation occurs at 1663 psia. Both EPU Analytical Limits are less than the lower transmitter range limit of 1700 psig used to determine the SI actuation Limiting Trip Setpoint in Section 8.4.5. Therefore, the Limiting Trip Setpoint calculation for Low Pressurizer Pressure SI actuation in Section 8.4.5 is not affected by the new EPU analytical limits provided in References G.59, C.16, and C.17.

Margin-to-Trip

Westinghouse Calculation CN-CPS-08-20 [Reference C.20] determined that normal operational transients under EPU conditions would not cause a low pressurizer pressure SI actuation, with margin. Refer to the calculation for the specific margin provided for different transients.

G. Pressurizer Pressure Safety Injection Block/Unblock

The pressurizer pressure safety injection block/unblock is a permissive. It is not credited as a primary or backup trip in any accident analysis (Ref. G.12). Therefore, no analytical limit or process limit is given in Reference G.12.

Nevertheless, the basis for recommended pressurizer pressure safety injection block and unblock setpoint values is provided in the following paragraphs.

Tech Spec Basis B 3.3.2 (Ref. G.2) describes the PZR Pressure SI block function as follows:

> *"To allow some flexibility in unit operations, the Pressurizer pressure SI Block is included as part of the ESFAS.*
>
> *The block permits a normal unit cooldown and depressurization without actuation of SI. With two-out-of-three pressurizer pressure channels ... less than the setpoint, the operator can manually block the Pressurizer Pressure-Low and Steam Line Pressure-Low SI signals. With two-out-of-three pressurizer pressure channels above the setpoint, the Pressurizer Pressure-Low and Steam Line Pressure-Low SI signals are automatically enabled...*
>
> *This Function must be OPERABLE in MODES 1, 2, and 3 to allow automatic initiation of SI actuation on Pressurizer Pressure-Low or Steam line Pressure-Low signals..."*

Thus, the SI block actually performs two separate functions: (1) a *block permissive*, which allows the operator to manually block the low PZR Pressure and low Steam Line Pressure Safety Injection signals, and (2) an automatic *block permissive reset*, which allows automatic initiation of the low PZR Pressure and low Steam Line Pressure Safety Injection signals. However, these two functions involve the trip and

Attachment E

reset of a single bistable in each channel. Because it ensures that the low pressurizer pressure safety injection and low steam line pressure safety injection will be available when needed, the *block permissive reset (or SI Unblock)* performs a safety function. The *block permissive* ensures that an inadvertent safety injection will not occur during a plant shutdown/cooldown—this is not considered a safety function but an important operational constraint.

The block permissive and subsequent manual block constitute an "operating bypass", as described in FSAR 7.2.1.1.o (Reference G.3), which is necessary to prevent a safety injection (a protective function) as the reactor coolant system is depressurized during a normal plant shutdown. FSAR 7.2.1.1.o states that the bypass must be "automatically removed whenever the permissive conditions are not met." Originally, the value of the block permissive reset was established by Westinghouse at 2000 psig (Reference G.46, Section 1.1.1(3))—the PBNP operators would perform the manual block at approximately 1950 psig. Establishing the block permissive reset at 2000 psig and performing the manual block at approximately 1950 psig is desirable because this 50 psig margin reduces the likelihood that the pressure will drift back up above the block permissive reset value (or SI Unblock), while the operator performs other activities related to the shutdown, thereby setting the stage for an inadvertent safety injection during the subsequent depressurization.

During the development of the PBNP Design Basis Documents, Westinghouse was asked about the value of the pressurizer pressure block permissive. Westinghouse replied (Reference G.49, item 21):

> *"There is no 'required' value for low pressurizer pressure to block SI. It appears that this is an arbitrary value which is high enough to block SI prior to the pressurizer pressure reaching the low pressure SI setpoint or the steam line pressure reaching the low pressure SI setpoint level and low enough to ensure SI actuation for the initial conditions of the accident analyses."*

As Westinghouse states, the value of the block permissive should be "high enough to block SI prior to the pressurizer pressure reaching the low pressurizer pressure safety injection setpoint level or the steam line pressure reaching the low steam line pressure safety injection setpoint level". Since the current field trip setpoint for low pressure safety injection is 1735 psig (see Sections 6.5), the block permissive should be set above 1735 psig.

The value for the block permissive reset should be "low enough to ensure SI actuation for the initial conditions of the accident analysis". A review of FSAR Tables 14.0-1, 14.0-2, 14.3.1-1, and 14.3.2-4 (Reference G.3) indicates that, for the accident analyses, the initial condition for RCS pressure is 2250 $\pm$ 50 psia. The lower end of this band is 2250 – 50 = 2200 psia = 2185 psig. This means that the block permissive reset (or SI Unblock) should be set less than 2185 psig.

Establishing the block permissive reset at the originally specified value of 2000 psig and the block permissive below the block permissive reset value of 2000 psig, but above the desired value of 1950 psig at which the operator would perform the manual block action, provides sufficient room between these setpoints and the limits just discussed to allow for operating margin and instrument uncertainty. Because the block permissive and block permissive reset involve a permissive function only, these are considered nominal setpoints and no formal calculation of the instrument uncertainty for this instrument loop is required.

Therefore, it is recommended the block permissive reset (unblock) value be established at 2000 psig and the block permissive value be established below the block permissive reset value of 2000 psig, but above the desired value of 1950 psig at which the operator would perform the manual block action.

Attachment F

NMC
Committed to Nuclear Excellence

INTERNAL CORRESPONDENCE

NPM 2007-0151

To: File

From: Kim Strickland, CRR Project Engineer

Date: April 27, 2007

Subject: Position Paper on Transmitter Environmental Uncertainties for PBNP-IC-12, "Pressurizer Pressure Uncertainty/Setpoint Calculation"

Copy To: J. Thorgersen, K. Holt, J. Nagell, K. Strickland, File

---

The attached paper titled "Use of normal or harsh transmitter environmental uncertainties to determine the Low Pressurizer Pressure SI setpoint", should be used as technical justification for applying normal transmitter temperature and radiation uncertainties in calculation PBNP-IC-12 to determine the Low Pressurizer Pressure SI Actuation setpoint.

Originator: Kim Strickland — 4/27/07 Date

Reviewed by: Jim Nagell — 4/27/07 Date

Approved by: Kelly Holt — 4-27-07 Date

Attachment

Attachment F

Use of normal or harsh transmitter environmental uncertainties
to determine the Low Pressurizer Pressure SI actuation setpoint
(4/27/07)

Purpose

To determine whether normal or harsh transmitter environmental uncertainties should be used to determine the Low Pressurizer Pressure SI actuation setpoint in calculation PBNP-IC-12.

Background

The Low Pressurizer Pressure SI actuation function is credited as a primary protective action for the core response analysis for Loss of Coolant Accidents (SBLOCA and LBLOCA) in FSAR Sections 14.3.1 and 14.3.2. The Low Pressurizer Pressure SI function is also credited for some non-LOCA accidents (steam line break and SG tube rupture) listed in Westinghouse letter WEP-06-23 dated 3/28/06.

The LOCA events are of particular interest for this paper because a LOCA creates a harsh containment environment for the three pressurizer pressure transmitters that supply the primary trip signals to perform the SI actuation function in the Engineered Safety Features Actuation System (ESFAS). The transmitters (PT-429, PT-430, and PT-431) are Foxboro N-E11GM pressure transmitters with a calibrated range of 1700 psig to 2500 psig.

A harsh containment environment increases the transmitter signal uncertainties due to elevated temperature and radiation effects beyond "normal" environmental conditions. This effect has been quantified in environmental qualification (EQ) test reports (see Reference 1) performed on the Foxboro N-E10 series pressure transmitters, which includes the N-E11 and N-E13 models discussed below.

Discussion

Transmitter Temperature Uncertainties for Analyzed LOCAs

The "time-to-trip" for the Low Pressurizer Pressure SI actuation function is a critical parameter for determining whether normal or harsh environmental conditions should be applied to the SI actuation trip setpoint, for reasons explained below. A LBLOCA is not discussed further because the SBLOCA cases all have longer (and therefore bounding) time-to-trip values.

FSAR Table 14.3.1-2 provides the SBLOCA sequence-of-events for each of three break sizes (2 inch, 3 inch, and 4 inch). The FSAR table includes the SI actuation time for each case. The smallest break size (2 inch) takes the longest time of the three cases to depressurize the RCS. Therefore, this break also has the longest time-to-trip (84 seconds) before SI actuation occurs. The **84 second time-to-trip** represents the largest *analyzed* time for determining whether normal or harsh environmental conditions should be applied to the pressurizer pressure transmitters (*unanalyzed* times-to-trip are discussed separately in a later section).

The low pressurizer pressure SI function is also credited in the "rupture of a steam pipe" accident analysis (FSAR Section 14.2.5). If the steam line break is inside containment, this accident would also create a transmitter harsh environment. FSAR Table 14.2.5-2 provides the sequence of events for various steam line breaks, including the SI actuation times on low pressurizer pressure. All of the Table 14.2.5-2 SI actuation times are under 25 seconds, which

Attachment F

is less than the 84 second time-to-trip for a 2-inch SBLOCA. Therefore, the time-to-trip for the 2-inch SBLOCA analysis bounds the steam line break analysis for this discussion.

Time-to-trip is critical to this discussion because a harsh containment environment does not instantaneously create larger transmitter uncertainties. A Foxboro transmitter is protected by a heavy, screwed-on metal housing and o-ring seals that prevent the containment atmosphere from entering the internal mechanism that generates the transmitter's 10-50 mA output signal. Similarly, the signal wire connection is sealed to prevent air/steam intrusion. For this reason, temperature changes inside the transmitter are delayed until conduction through the housing heats the internals. The time it takes to heat the transmitter internals was determined by qualification testing.

In 1983, Wyle Laboratories performed EQ testing to determine how quickly Foxboro transmitter internals heated when immersed in a hot oil bath (simulating a hot steam environment). The results are contained on page X-259 of Test Report 45592-4 (attached). The results show that from an initial transmitter temperature of 75°F and an initial oil bath temperature of 347°F, the immersed transmitter's internals reached temperatures between 90°F and 116°F in the first two minutes (120 seconds) with the oil bath at or above 324°F (the bath cooled to this value due to the transmitter immersion). For the worst-case temperature rise (measured at the base of the transmitter force motor), the internals increased (116 – 75) = 41°F in 120 seconds.

From this testing, it can be concluded that the largest temperature rise for the Foxboro transmitter internals would be **less than 41°F** for the 2-inch SBLOCA SI actuation occurring at 84 seconds, which bounds all PBNP-analyzed LOCAs and steam line breaks.

Foxboro product specification sheet PSS 9-1B1 A (attached) for the N-E11 and N-E13 Series pressure transmitters shows that the normal operating temperature range specified for these transmitters is 32°F to 180°F, although the transmitters have been qualified up to 420°F. It can be concluded from the vendor information that the Foxboro transmitters will continue to function normally (with normal temperature uncertainty effects) up to their normal operating temperature limit of 180°F.

Containment temperature is maintained ≤120°F by PBNP Technical Specifications. Assuming that the initial containment temperature prior to the LOCA is the maximum allowed value of 120°F, a 41°F temperature rise would result in the transmitter internals reaching (120 + 41) = 161°F at the time the SI actuation occurred. This maximum temperature is conservatively high because the 84 second time-to-trip is less than the tested soak time of 120 seconds, the containment temperature at the trip time will be well below the tested oil bath temperature, and the electronic circuitry will not reach the same temperature as the metal force balance base in the transmitter (as shown in the test report).

Regardless of these conservatisms, a 161°F maximum temperature assumed for the transmitter internals when SI actuation occurs is within the 180°F operating limit for the transmitters. Once actuation occurs, any further increase in the internal temperature is not a concern for the SI function, although it may be necessary to consider for post-accident monitoring uncertainties.

<u>Conclusion #1</u>:

> Foxboro pressurizer pressure transmitter internal temperatures will be in the normal operating temperature region (<180°F) when SI actuation occurs in the plant LBLOCA and SBLOCA analyses. Transmitter internal temperatures up to 180°F should be used to determine the low pressurizer pressure SI actuation setpoint uncertainties.

Attachment F

What about break sizes under 2 inches?

The 2-inch SBLOCA bounds any larger break in this evaluation. This is because breaks above 2 inches depressurize the RCS more rapidly than the 2-inch break and therefore have shorter times-to-trip. This makes the 2-inch break bounding for determining the largest temperature exposure (soak) time before SI actuation occurs for any larger break size.

Breaks under 2 inches are not analyzed in the FSAR. However, smaller breaks will result in a longer time-to-trip and a larger soak time, potentially causing higher transmitter internal temperatures. For example, a very small (< 0.5 inch) break with flow just above the charging pump makeup capacity could theoretically take an hour or more to depressurize the RCS to the SI actuation setpoint. Although operator manual action would occur long before this happened, a delayed time-to-trip could potentially drive transmitter internal temperatures above 180°F.

The technical justification for not considering larger transmitter temperature effects from breaks below 2 inches is based on crediting SI actuation from a diverse trip under these unanalyzed small break conditions. The source is the containment high pressure SI actuation. This diverse trip will occur when containment pressure reaches approximately 6 psig (the analytical limit assumed for the trip).

A LOCA creates a steam/air mixture inside containment. The partial pressures of this mixture result in containment reaching the 6 psig setpoint at an air temperature of approximately 173°F (Reference 4). This means that small breaks under 2 inches will create one of two situations: either a) SI actuation on high containment pressure will occur as air temperature increases to 173°F, or b) the containment air temperature will remain below 173°F long enough that the low pressurizer pressure SI actuation will occur while the transmitter internals are within their normal operating temperature range. In either case, the pressurizer pressure transmitters will not exceed their normal temperature range of 180°F while SI actuation is occurring.

Because small breaks in this category (< 2 inches) are not analyzed in the FSAR, there is no safety analysis or licensing requirement to demonstrate that a specific trip parameter will perform the SI actuation function. Therefore, crediting high containment pressure is as valid as crediting low pressurizer pressure to accomplish the SI actuation function for breaks below 2 inches.

This same argument is applicable to small steam line breaks below the sizes analyzed in FSAR Section 14.2.5.

Conclusion #2:

For RCS breaks below 2 inches and small steam line breaks inside containment (i.e., those breaks not analyzed in the FSAR), high containment pressure performs a diverse SI actuation function from low pressurizer pressure. Because this category of breaks is not analyzed, SI actuation due to either parameter may be credited prior to the pressurizer pressure transmitters reaching their normal operating temperature limit of 180°F. Therefore, for SI actuation setpoint determination, transmitter temperature effects do not need to consider heatup effects beyond 180°F.

Attachment F

Radiation

No harsh environment radiation effects need to be considered in the determination of the low pressurizer pressure SI actuation setpoint for the following reasons:

1. During a Large Break LOCA, even if immediate core damage is assumed, the low pressurizer pressure SI actuation will occur within seconds of the event before any core release to containment occurs. The transmitter will not be exposed to post-accident radiation during the few seconds it takes to generate the SI actuation signal after the break occurs. Even if there was instantaneous core release, the dose received over these few seconds would be negligible.

2. The Small Break LOCA analyses demonstrate that the core remains intact. Fuel cladding temperatures are maintained below required limits in 10CFR 50.46. Therefore, the radiation level at the transmitters during the initial period of a SBLOCA is essentially the same as the normal operation dose rate, and no harsh environment radiation effects need to be considered for determining the low pressurizer pressure SI actuation setpoint.

Conclusion #3:

Normal containment radiation effects need to be considered for the determination of the low pressurizer pressure SI actuation setpoint. Harsh (post-accident) radiation effects do not need to be considered.

Summary

The SI actuation setpoint for low pressurizer pressure calculated in PBNP-IC-12 should be based on normal transmitter internal temperatures up to 180°F and normal containment radiation levels. Harsh (adverse) containment environmental effects should NOT be used to determine the setpoint.

References

1. Wyle Labs Test Report 45592-4, Foxboro N-E10 Series Pressure Transmitters
2. Foxboro Specification Sheet PSS 9-1B1 A for Model N-E11 and N-E13 Pressure Transmitters
3. FSAR Table 14.3.1-2, Small Break LOCA Time Sequence of Events
4. Calculation WEP-SPT-29-01-A, "Containment Parameter EOP Setpoints M.13, M.14, and M.25", dated 1/4/07

Attachment F

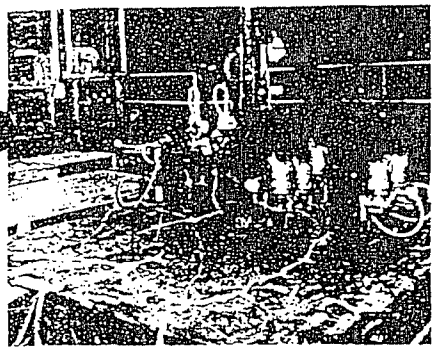

Test Report

REPORT NO. 45592-4

WYLE JOB NO. 45592

CUSTOMER P. O. NO. A-61348

PAGE 1 OF 1420 PAGE REPORT

DATE May 18, 1983

SPECIFICATION (S) See References in Paragraph 5.0

1.0 CUSTOMER Wisconsin Electric Power Company (Representative - Utility Transmitter Qualification Group)

ADDRESS 231 W. Michigan, Milwaukee, Wisconsin 53201

2.0 TEST SPECIMEN Foxboro N-E10 Series Pressure Transmitters

3.0 MANUFACTURER Foxboro

4.0 SUMMARY

The Qualification Test Program was performed to satisfy the intent of IEEE Std. 323-1974, "Standard for Qualifying Class 1E Equipment for Nuclear Power Generating Stations," and IEEE Std. 344-1975, "Recommended Practices for Seismic Qualification of Class 1E Equipment for Nuclear Power Generating Stations," in accordance with Category I of NUREG-0588, "Interim Staff Position on Environmental Qualification of Safety-Related Electrical Equipment," December, 1979.

(DNRM)

STATE OF ALABAMA
COUNTY OF MADISON

California Professional Engineering Reg. No. 2635

James E. Gleason, being duly sworn, deposes and says: The information contained in this report is the result of complete and carefully conducted tests and is to the best of his knowledge true and correct in all respects.

SEAL

SUBSCRIBED and sworn to before me this 20th day of May, 19 83

Notary Public in and for the State of Alabama at large

My Commission expires Jan. 30, 19 85

Wyle shall have no liability for damages of any kind to person or property, including special or consequential damages, resulting from Wyle's providing the service covered by this report.

PREPARED BY James E. Gleason 5-19-83

APPROVED BY Larry Gamblin

WYLE Q. A. W. B. Roberts 5/20/83

W. B. Roberts

WYLE LABORATORIES SCIENTIFIC SERVICES & SYSTEMS GROUP
HUNTSVILLE, ALABAMA

0082 0001

Attachment F

5.0 Summary of Test Results

5.1 Test No. 1

E13DM-1SAMX Electronic d/p Transmitter
S/N 2592439
N0148NL Amplifier No. 6

A. Simulated DBA Test - Thermal Response Measurements

Note: Thermocouples, T-	Location
1	Output Transistor (Q3)
2	Amplifier Webbing
3	Air inside amplifier
4	Base of force motor
5	Air inside cover
6	Silicon Oil

Test Time Min	Thermocouples, T-	Temperature °F 1	2	3	4	5	6
0		75	75	75	75	75	347
1		76	76	76	80	113	333
2		90	90	96	116	182	324
3		103	103	102	142	215	324
4		116	116	122	156	235	324
5		129	129	136	175	251	327
10		195	195	202	238	297	334
15		248	248	248	274	317	334
20		281	281	281	298	324	334
30		317	317	317	320	333	334
40		330	330	330	333	334	334
50		334	334	334	334	334	334
60		334	334	334	334	334	334
70		334	334	334	334	334	334
102		251	251	251	251	251	251
180		150	150	150	150	150	150
See Graph Nos.		1	1	1	2	2	1 & 2

Attachment F

5.0 Test Procedure

Test unit was placed horizontally into an insulated steel tank which was filled with Dow Corning 210H silicon oil.

Heaters were placed into the tank and a controller controlled the temperature points at the required level. The oil was continuously stirred for uniformity of temperature.

The test units were powered continuously and the input signal was maintained at 80% except when specific calibration point tests were made.

The output signal of the unit was also recorded and a digital voltmeter was used to take output readings across a precision resistor.

For thermal response measurements of Test No. 1 six thermocouples were placed at various locations within the transmitter and in the silicon oil. The thermocouples were read on a multi-record thermocouple recorder.

See Diagram No. 1.

Attachment F

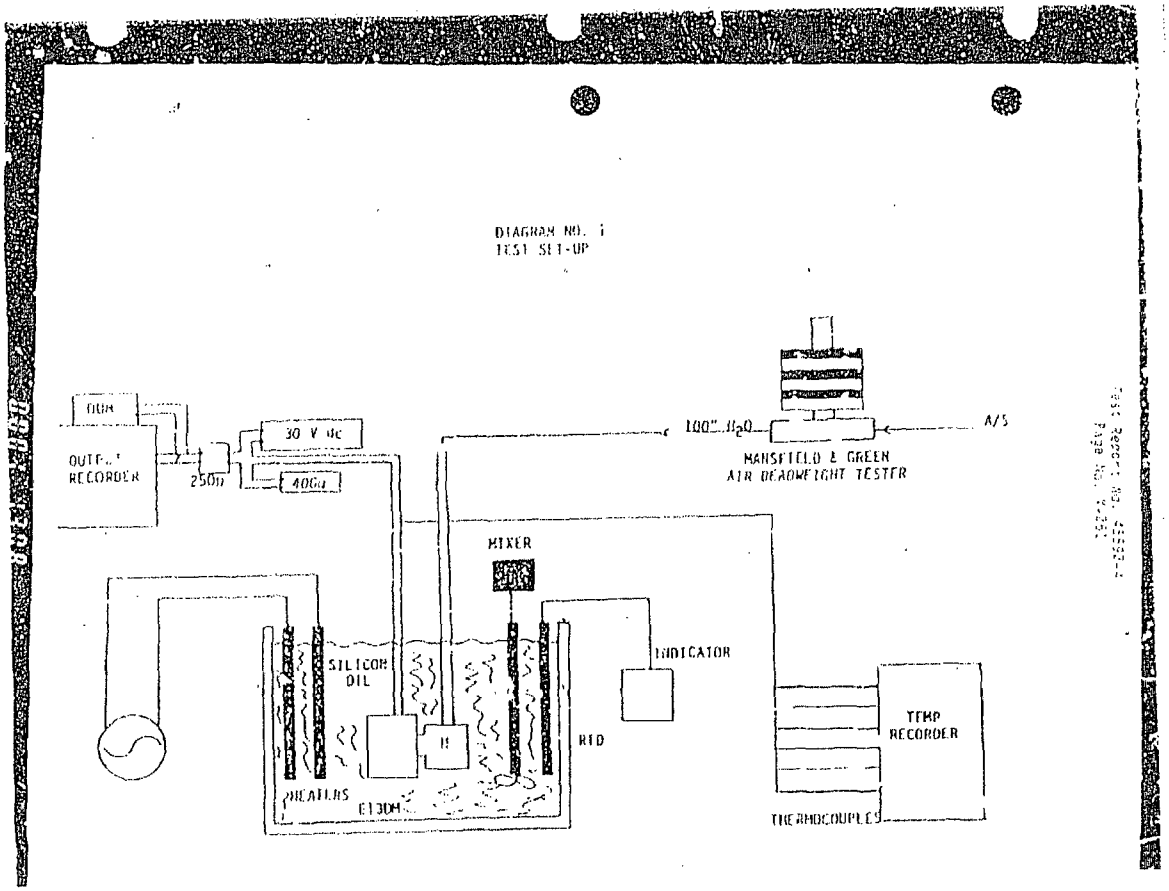

Attachment F

Product Specifications PSS 9-1B1 A

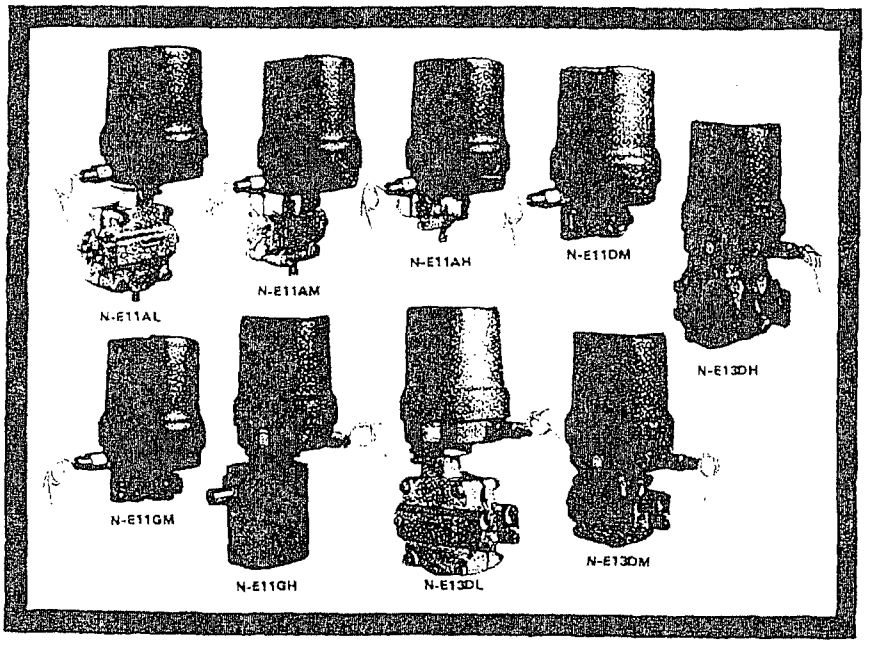

N-E11 AND N-E13 SERIES NUCLEAR ELECTRONIC PRESSURE TRANSMITTERS

These transmitters measure absolute pressure, gauge pressure, or differential pressure, and transmit a proportional 4 to 20 or 10 to 50 mA dc signal. They are 2-wire transmitters that have been type-tested for applications under seismic, radiation, aging, and loss-of-cooling accident (LOCA) environments of Nuclear Power Plants per IEEE 323-1974 and 344-1975 requirements.

QUALIFIED FOR NUCLEAR APPLICATIONS

A Design Control and Quality Assurance Program has been established which complies with ANSI N45.2 and Code of Federal Regulations 10CFR50, Appendix B. Certificates of Testing are provided with each transmitter including burst, cleaning, hydrostatic testing, and calibration. Production transmitters have been type tested to demonstrate their performance under typical accident conditions, for Class IE, in-containment applications of *Nuclear Power Generating Stations*. Type test reports (user documents) are available.

SERVICEABILITY

The complete line of N-E11 and N-E13 Series transmitters are supplied with detailed instructions and parts lists that provide the user considerable flexibility and capability for field repair.

SPEED 2002 - 562
P

Weed Instrument
Temperature, Pressure, and Fiber Optic Technology

Attachment F

PSS 9-1B1 A
Page 2

FIELD INTERFACE

Optional junction box allows quick and easy field wiring to terminal blocks without the need for nuclear splices or seals. Optional seismic mounting brackets allow vertical or horizontal pipe mounting, or wall mounting.

OPERATING CONDITIONS

Influence	Reference Operating Conditions	Normal Operating Conditions Limits (OBE)	Operative Limits (DBE)
Ambient Temperature (Topworks with Amplifier)	24 ± 2°C (75 ± 3°F)	0 and 80°C (32 and 180°F)	-18 and + 216°C[a] (0 and 420°F)
Process Temperature	24 ± 2°C (75 ± 3°F)	0 and 80°C (32 and 180°F)	-18 and + 120°C[a] (0 and 250°F)
Relative Humidity	50 ± 10%	No Limit	No Limit
Ambient Pressure	101 kPa (14.7 psi) (Atmospheric)	94 and 108 kPa (13.7 and 15.7 psi)	585 kPa (85 psi)
Vibration and Seismic ("g" load in any plane)	Negligible	Per OBE Test Profile (see Figure 1)	Per SSE Test Profile (see Figure 2)
Position	Upright	0 to 90° tilt in any plane	No Limit
Radiation Rate (Gamma)	Negligible	0.2 rad/h	3×10^6 rad/h[b]
Total Integrated Dose (TID) (Gamma-Air Equivalent)	Negligible	3.5×10^4 rad	2.0×10^8 rad[c]

[a] LOCA peak is 216°C (420°F) for a 3-minute duration, and 178°C (350°F) for a 10-minute duration. Refer to LOCA/HELB test profile, Figure 5.
[b] Accident dose rate is 3×10^6 rad/h for 2 hours, then 1×10^6 rad/h.
[c] TID includes 1.5×10^8 rad accident dosage plus 0.3×10^8 rad gamma equivalent for a beta TID of 1.5×10^9 rad. Margin also included in TID.

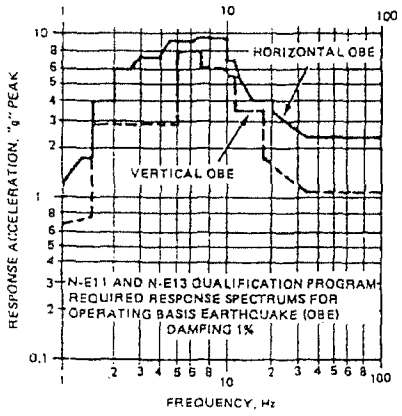

Figure 1.

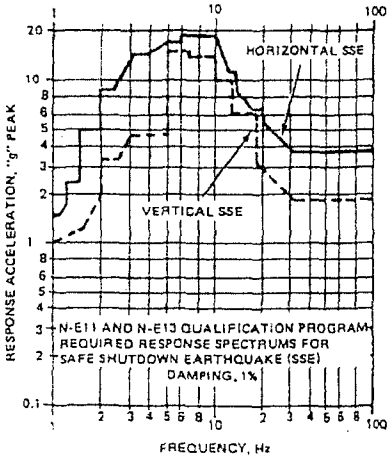

Figure 2.

SPEED 2002-062

Attachment G

Accident Ambient Containment Pressure Calculation

As discussed in section 6.10 of this calculation, if the ambient temperature exceeds 220°F, the insulation resistance of the cable may be adversely affected. The effect of this degradation of the insulation is to add a bias which increases the total loop error. However, a high energy line break that causes the containment temperature to increase would also cause the containment pressure to increase, which introduces another bias. This attachment demonstrates that the containment pressure will exceed 15 psig before the containment temperature reaches 220°F.

The pressure in containment that corresponds to a particular post-accident containment temperature depends on the conditions in containment just prior to the accident. The specific parameters of interest are the initial containment pressure, temperature, and humidity. During plant operation, these three parameters vary. The containment temperature is limited to 120°F (Reference G.2), while the containment pressure is limited to a value between -2.0 psig and +2.0 psig (Reference G.2). There is no Technical Specification limit on humidity—in theory, the relative humidity could vary between 0 and 100%.

Reference C.15 demonstrates, using conservative but realistic values for these parameters, that the containment pressure will exceed 6 psig before the containment temperature reaches 180°F. However, if, instead, the extreme values for these parameters given in the previous paragraph are assumed to occur simultaneously, which is considered unrealistically conservative, the following discussion shows that the containment pressure will exceed 15 psig before the containment temperature reaches 220°F.

The initial partial pressure of the air is given by the following relationship:

$$P_{a1} = P_1 - P_v(T_1) \qquad \text{(Eq G-1)}$$

where:

P_1 = initial containment pressure (psia)
T_1 = initial containment temperature (°F)
$P_v(T_1)$ = partial pressure of water vapor at the initial containment temperature (psia)

and this last expression is equivalent to:

$$P_v(T_1) = \phi_1 \times P_{sat}(T_1) \qquad \text{(Eq G-2)}$$

where:

ϕ_1 = initial containment relative humidity (fraction)
$P_{sat}(T_1)$ = saturation pressure at initial containment temperature (psia) [from Reference G.5]

Attachment G

During accident conditions, hot water from the RCS is released to the containment and saturates the air at the atmospheric temperature. Thus, when the containment temperature reaches the temperature of interest—that is, the temperature (T_2) at which the insulation resistance effect must be considered—the containment pressure will be:

$$P_2 = P_a + P_v(T_2) \qquad \text{(Eq G-3)}$$

where:

the partial pressure of the air $= P_a = (P_{a1}) \times \left(\frac{T_2}{T_1}\right)$

T_1 = initial containment temperature (R)

T_2 = final containment temperature (R)

the partial pressure of the water vapor $= P_v(T_2) =$ saturation pressure at T_2 (psia)

The containment integrity analysis for a Large Break LOCA predicts a small amount of superheat early in the transient after which the containment atmosphere reaches saturation conditions (Reference G.3). Superheated steam is not nearly as effective a heat transfer mechanism as is the condensation of saturated steam. In a Small Break LOCA, the energy release rate is much lower than in a Large Break LOCA, and even this brief period of superheat is not expected. Therefore, it is appropriate to use the saturation pressure at T_2 for the partial pressure of the water vapor.

After substituting the expression for the partial pressure of the air, the equation for the containment pressure at which the limiting temperature, T_2 , is reached (Eq. G-3) becomes:

$$P_2 = \left[(P_{a1}) \times \left(\frac{T_2}{T_1}\right)\right] + P_v(T_2) \qquad \text{(Eq G-4)}$$

The temperature of interest is then substituted into the equation as the limiting temperature, T_2, and the equation is solved to determine the containment pressure, P_2, at which the limiting containment temperature will occur.

By review of Equations G-1, G-2 and G-4, it is clear that the calculated pressure is minimized by maximizing initial temperature (T_1), minimizing initial pressure (P_1) and maximizing initial relative humidity (ϕ_1). Thus, the initial conditions are:

- containment temperature = 120°F
- containment pressure = -2 psig
- containment relative humidity = 100%

Attachment G

The initial partial pressure of the air can be found from the relationship:

$$P_{a1} = P_1 - P_v(T_1)$$

where:

P_1 = initial containment pressure = -2 psig = 12.7 psia
T_1 = initial containment temperature = 120°F = 580R
$P_v(T_1)$ = partial pressure of water vapor at the initial containment temperature

and this last expression is equivalent to:

$$P_v(T_1) = \phi_1 \times P_{sat}(T_1)$$

where:

ϕ_1 = initial containment relative humidity = 1.0
$P_{sat}(T_1)$ = saturation pressure at initial containment temperature of 120°F
= 1.7 psia (Reference G.5)

so that:

$$P_{a1} = 12.7 - (1.0)(1.7) = 11.0 \text{ psia}$$

Then, when the containment temperature reaches the limiting temperature, T_2 (= 220°F = 680R), the containment pressure will be:

$$P_2 = P_a + P_v(T_2)$$

where:

the partial pressure of the air = $P_a = (P_{a1}) \times \left(\frac{T_2}{T_1}\right)$
the partial pressure of the water vapor = $P_v(T_2)$ = saturation pressure at 220°F
= 17.2 psia (Reference G.5)

so that the containment pressure at which the limiting temperature, 220°F , is reached is given by:

$$P_2 = \left[(P_{a1}) \times \left(\frac{T_2}{T_1}\right)\right] + P_v(T_2)$$

Attachment G

$$P_2 = \left[(11.0 \text{ psia}) \times \left(\frac{(680 \text{ R})}{580 \text{ R}} \right) \right] + P_v (220^\circ \text{F})$$

$$= 12.9 \text{ psia} + 17.2 \text{ psia} = 30.1 \text{ psia} = \underline{15.4 \text{ psig}}$$

ENCLOSURE 3

NEXTERA ENERGY POINT BEACH, LLC
POINT BEACH NUCLEAR PLANT, UNITS 1 AND 2

LICENSE AMENDMENT REQUEST 261
EXTENDED POWER UPRATE
RESPONSE TO REQUEST FOR ADDITIONAL INFORMATION

TURBINE IMPULSE PRESSURE LOW POWER PERMISSIVE P-7
INSTRUMENT SCALING AND UNCERTAINTY CALCULATION

63 pages follow

TURBINE IMPULSE PRESSURE LOW POWER PERMISSIVE P-7 INSTRUMENT SCALING AND UNCERTAINTY CALCULATION

TABLE OF CONTENTS

1.0 BACKGROUND, PURPOSE AND SCOPE OF CALCULATION 7
- **1.1 Background 7**
- **1.2 Purpose 7**
- **1.3 Purpose for Revision 7**
- **1.4 Scope 7**
- **1.5 Instrumentation Evaluated 8**
- **1.6 Superseded Station Calculations 8**

2.0 ACCEPTANCE CRITERIA 9

3.0 ABBREVIATIONS 10

4.0 REFERENCES 11
- **4.1 General 11**
- **4.2 Drawings 12**
- **4.3 Procedures 13**
- **4.4 Vendor 14**
- **4.5 Calculations 14**

5.0 ASSUMPTIONS 15
- **5.1 Validated Assumptions 15**
- **5.2 Unvalidated Assumptions 16**

6.0 DESIGN INPUTS 17
- **6.1 Loop Definitions 17**
- **6.2 Loop Block Diagram 17**
- **6.3 Component Model and Tag Numbers 18**
- **6.4 Range List 18**
- **6.5 Environmental Considerations 18**
- **6.6 Process Considerations 20**
- **6.7 Full-Load Impulse Pressure 20**

7.0 METHODOLOGY 21
7.1 Scaling Determination 21
7.2 Uncertainty Determination 22
7.3 Drift Considerations 23
7.4 Sources of Uncertainty 23
7.5 As-Found Tolerance Equation Summary 24
7.6 As-Left Tolerance Equation Summary 25
7.7 Operability Limit (OL) Equation Summary 26
7.8 Allowable Value 27
8.0 BODY OF CALCULATION 28
8.1 Transmitter Scaling 28
8.2 Device Uncertainty Analysis 29
8.3 Uncertainty Summary 37
8.4 Setpoint Evaluation 38
8.5 Operability Limit Determination 39
8.6 Allowable Value 41
8.7 Acceptable As-Found Tolerances 41
8.8 Acceptable As-Left Tolerances 43
9.0 RESULTS AND CONCLUSIONS WITH LIMITATIONS 45
9.1 Transmitter Scaling 45
9.2 Setpoint, Operability Limits and Allowable Value Evaluation 45
9.3 Acceptable As-Left and As-Found Tolerances 46
9.4 Setpoint Diagram 47
9.5 M&TE Limitations 48
9.6 Temperature Limitations 48
9.7 Implementation Limitation 48
10.0 IMPACT ON PLANT DOCUMENTS 49
11.0 ATTACHMENT LIST 51
12.0 10 CFR 50.59 REVIEW 51

ATTACHMENTS

1.0 BACKGROUND, PURPOSE AND SCOPE OF CALCULATION

1.1 Background

The Low Power Reactor Trips Block, interlock P-7, automatically blocks certain reactor trips when the plant power level is below approximately 10%. The safety function of this interlock is to automatically enable (or "unblock") these same trips when the power level is above the P-7 setpoint. Per the FSAR, the following reactor trips are blocked and unblocked by P-7:

- Pressurizer Pressure - Low
- Pressurizer Water Level - High
- Reactor Coolant Flow – Low (Two Loops)
- Reactor Coolant Pump Breaker Position (Two Loops)
- Undervoltage Bus A01 and A02
- Turbine Generator Trip

The P-7 interlock (or "permissive") is actuated by input from either Power Range Neutron Flux or Turbine Impulse Pressure. Power Range Neutron Flux provides a measure of reactor power, while Turbine Impulse Pressure provides a measure of turbine power. The input from the Power Range Neutron Flux channels is addressed in calculation 2009-0002 (formerly PBNP-IC-38). The input from the Turbine Impulse Pressure channels is the subject of this calculation.

1.2 Purpose

This calculation establishes the Field Trip Setpoint (FTSP), Operability Limits (OL) and calculates the Allowable Value (AV) for the turbine impulse pressure input to the P-7 permissive unblock function at the present power level. This calculation also determines turbine impulse pressure instrument scaling values.

1.3 Purpose for Revision

Calculation 2007-0001 is a new calculation and has no revisions. This calculation establishes the Operability Limits and expresses the setpoint values in terms of % turbine full load. The usage of % turbine full-load will support both current power operation and Extended Power Uprate (EPU) as the EPU turbine modifications are expected to change the 1st stage impulse pressure for 100% turbine load from the current pressure value. When the turbine modifications are completed this calculation will require revision to support the calibration procedures.

1.4 Scope

The scope of this calculation is listed below:

- Determine the relationship between turbine impulse pressure and the associated pressure transmitter output
- Establish a Field Trip Setpoint (FTSP) for the turbine impulse pressure input to the P-7 permissive reactor trip unblock

- Establish an Allowable Value (AV) for the turbine impulse pressure input to the P-7 permissive reactor trip unblock
- Establish the Operability limits (OL) for the turbine impulse pressure input to the P-7 permissive reactor trip unblock
- Establish acceptable As-Found calibration tolerances for devices shown in Table 1.5-1
- Establish acceptable As-Left calibration tolerances for devices shown in Table 1.5-1

1.5 Instrumentation Evaluated

This calculation evaluates the turbine impulse pressure instrumentation listed in the table below. See Sections 6.2, 6.3 and 6.4 for instrument specifications, parameters and loop configurations.

Table 1.5-1

Component	Equipment ID Numbers
Pressure Transmitter	1(2)PT-485, 1(2)PT-486
Bistable*	1(2)PC-485A/B, 1(2)PC-486A/B
Current-to-Current Converter	1(2)PM485A, 1(2)PM-486A, 1(2)PM-485B
PPCS	1(2)P-485, 1(2)P-486
Indicator	1(2)PI-485, 1(2)PI-486

*This calculation only evaluates 1(2)PC-485A and 1(2)PC-486A; however, the full bistable equipment number, as used in Passport, is shown above for clarity.

1.6 Superseded Station Calculations

The following existing calculations will be superseded upon issuance of Calculation 2007-0001 Rev. 0:

- PBNP I&C Calculation Book, Section 3.7 (1 Page), "First Stage Pressure Input to P-7 and Load Limit Reduction" (portion pertaining to first stage pressure input to P-7 only)

2.0 ACCEPTANCE CRITERIA

The uncertainty values determined in this calculation are considered acceptable if calculated in accordance with the Point Beach Nuclear Plant Instrument Setpoint Methodology (Reference G.1) and the Point Beach Nuclear Plant Instrument Scaling Methodology (Reference G.2).

This calculation establishes a new FTSP, Operability Limits and AV based on the discussion in Section 6.6 and Attachment D and the requirements of Attachment B. As such, the adequacy of the existing values is not evaluated, and no specific acceptance criteria are associated with the determination of the FTSP, Operability Limits and AV.

3.0 ABBREVIATIONS

3.1	AV	Allowable Value
3.2	CTS	Custom Technical Specifications
3.3	ESFAS	Engineered Safety Features Actuation System
3.4	FSAR	Final Safety Analysis Report
3.5	FTSP	Field Trip Setpoint
3.6	HELB	High Energy Line Break
3.7	I/I	Current-to-Current (Converter)
3.8	ITS	Improved Technical Specifications
3.9	LOCA	Loss of Coolant Accident
3.10	LTSP	Limiting Trip Setpoint
3.11	M&TE	Measurement and Test Equipment
3.12	OL	Operability Limit
3.13	PBNP	Point Beach Nuclear Plant
3.14	PL	Process Limit
3.15	PLS	Precautions, Limitations and Setpoint Document
3.16	PPCS	Plant Process Computer System
3.17	RAD	Radiation Absorbed Dose
3.18	RPS	Reactor Protection System
3.19	SRSS	Square Root of the Sum of the Squares
3.20	Tech Spec	Technical Specifications
3.21	TLE	Total Loop Error
3.22	WOG STS	Westinghouse Owners Group Standard Technical Specifications

4.0 REFERENCES

The revisions and/or dates of the References per this section are current as of 06/27/07.

4.1 General

G.1 Point Beach Nuclear Plant Design & Installation Guidelines Manual, DG-I01, "Instrument Setpoint Methodology", Rev. 4

G.2 Wisconsin Electric Nuclear Power Business Unit Design and Installation Guideline, DG-I02, "Instrument Scaling Methodology", Rev. 0

G.3 Point Beach Final Safety Analysis Report

Section 9.8.1 (dated August 2006)
Section 11.6.2 (dated June 2003)
Section 7.2 (dated August 2005)

G.4 Point Beach Nuclear Plant Technical Specifications

Section 3.3.1, Amendment 201 (Unit 1), 206 (Unit 2)
Section B 3.3.1, Amendment 201 (Unit 1), 206 (Unit 2)

G.5 Not Used

G.6 Bechtel Corporation Specification No. 6118-M-40, Rev. 1, "Specification for Heating, Ventilating, and Air Conditioning Controls"

G.7 WCAP-8587, Rev. 6-A, "Methodology for Qualifying Westinghouse WRD Supplied NSSS Safety Related Electrical Equipment," dated March 1983

G.8 WCAP-7116, "Point Beach Nuclear Plant: Precautions, Limitations and Setpoints for Nuclear Steam Supply Systems", dated October 1969

G.9 NUREG-1431, Volume 1, Rev. 3.0, "Standard Technical Specifications Westinghouse Plants", June 2004, Table 3.3.1-1

G.10 WCAP-7451, Rev. 1, "Steam Systems Design Manual", Section V-12

G.11 NPL 2001-0032, Dockets 50-266 and 50-301 Supplement 9 to Application for Amendment to Facility Operating License Appendix A: Technical Specifications Improvement Project Response to RAI on ITS Sections 3.3.1 and 5.0, Point Beach Nuclear Plant, Units 1 and 2", dated February 06, 2001

G.12 STPT 3.1, Revs. 0, 1, 4 and 11, "P6, P7, P8, P9 and P10"

G.13 NPC 1999-05675-V3, "PBNP Units 1 and 2 Technical Specifications Improvement Project, November 1999, Volume 3, Section 3.3.1", 11/15/99 WOG STS

G.14 DIT CRR-I&C-013, "Calculation 2007-0001 First Stage Pressure", dated 06/07/07

G.15 PBNP Condition Report A/R 141685 (CR 95-109) Evaluation, dated February 22, 1995

G.16 PB 634, Specification for the Safety Assessment System and Plant Process Computer System for the Point Beach Nuclear Plant PPCS 2000, Revision 3

G.17 PBNP Modification Request MR 98-002-C, "PPCS Changeover from Old to New PPCS", dated April 20, 2005

G.18 Westinghouse Report WEPB-PCS-NAP-FL-001-FS-02, "WEPB Plant Computer Replacement Project Functional Design Specification Document-Flow and Level Corrections", dated October 10, 2001

G.19 Westinghouse Report WEPB-PCS-NAP-IT-001-FS-02, "WEPB Plant Computer Replacement Project Functional Design Specification Document-Incore Thermocouples", dated October 08, 2001

G.20 Passport Preventive Maintenance frequency check for Computer Analog to Digital Converters (located on D080 panel under PMID 17263)

G.21 CT-20214, Rev. 1, "Wisconsin-Michigan Power Company, Point Beach Nuclear Unit, 503191 KW Turbine Generator"

G.22 DIT CRR-I&C-012, "Treatment of Backup Trips and Permissives", dated 06/04/07 (Attachment B)

G.23 Design Information Transmittal (DIT) CRR-I&C-014 dated 8/23/07, Supplement to Section 3.3.8 of PBNP Design Guide DG-I01 Rev 4, Methodology to determine the Operability Limit

4.2 Drawings

D.1 Foxboro BD-3, Sh. 1, Rev. 7, "Block Diagram-Instrument Reactor Protection System ΔT-T_{AVG} Loop A-2", Unit 1

D.2 Foxboro BD-4, Sh. 1, Rev. 7, "Block Diagram-Instrument Reactor Protection System Loop B-1", Unit 1

D.3 Foxboro BD-3, Rev. 6, "Block Diagram-Instrument Reactor Protection System ΔT-T_{AVG} Loop A-2", Unit 2

D.4 Foxboro BD-4, Rev. 6, "Block Diagram-Instrument Reactor Protection System ΔT-T_{AVG} Loop B-1", Unit 2

D.5 Foxboro CD-4, Sh. 2 of 2, Rev. 12, "Wiring Diagram-Interconnect Reactor Control System Rack 1W1 (1C113) Bottom", Unit 1

D.6 Foxboro CD-4, Sh. 2 of 2, Rev. 9, "Wiring Diagram-Interconnect Reactor Control System Rack 2W1 (2C113) Bottom", Unit 2

D.7 Foxboro CD-6, Sh. 2 of 2, Rev. 11, "Wiring Diagram-Interconnect Reactor Control System Rack 1B1 (1C113) Bottom", Unit 1

D.8 Foxboro CD-6, Sh. 2 of 2, Rev. 7, "Wiring Diagram-Interconnect Reactor Control System Rack 2B1 (2C116) Bottom", Unit 2

D.9 Foxboro BD-15, Rev. 12, "Block Diagram-Instrument Reactor Control System Rod Control", Unit 1

D.10 Foxboro BD-15, Rev. 11, "Block Diagram-Instrument Reactor Control System Rod Drive Control", Unit 2

D.11 Foxboro BD-17, Rev. 12, "Block Diagram-Instrument Reactor Control System Rod Speed & Steam Dump", Unit 1

D.12 Foxboro BD-17, Rev. 11, "Block Diagram-Instrument Reactor Control System Rod Speed & Steam Dump", Unit 2

D.13 0082, Sh. 10, Rev. 9, "Cable Spreading Room Air Conditioning System Rack C58"

4.3 Procedures

P.1 1ICP 02.020WH, Rev. 10, "Post-Refueling Pre-Startup RPS and ESF White Channel Analog Surveillance Test"

P.2 2ICP 02.020WH, Rev. 10, "Post-Refueling Pre-Startup RPS and ESF White Channel Analog Surveillance Test"

P.3 1ICP 02.020BL, Rev. 10, "Post-Refueling Pre-Startup RPS and ESF Blue Channel Analog Surveillance Test"

P.4 2ICP 02.020BL, Rev. 10, "Post-Refueling Pre-Startup RPS and ESF Blue Channel Analog Surveillance Test"

P.5 1ICP 04.010-1, Rev. 7, "First Stage Pressure Outage Calibrations"

P.6 2ICP 04.010-1, Rev. 7, "First Stage Pressure Outage Calibrations"

P.7 1ICP 04.001J, Rev. 4, "Reactor Protection and Safeguards Analog Racks Pressurizer Level and First Stage Pressure Outage Calibration"

P.8 2ICP 04.001J, Rev. 6, "Reactor Protection and Safeguards Analog Racks Pressurizer Level and First Stage Pressure Outage Calibration"

P.9 ICP 5.18, Rev. 28, "Rod Speed Control"

P.10 ICI 12, Rev. 8, "Selection of M&TE for Field Calibrations"

4.4 Vendor

V.1 Johnson Controls Temperature Composite Book 2, VTM #00309B, Rev. 5, dated 8/15/94 – T-4000 Series Pneumatic Room Thermostats (Tab – Thermostats & Thermometers)

V.2 Foxboro 611GM Force Balance Pressure Transmitter – Foxboro Composite Books, PBNP VTM # 00623A, Book 3 – Rev. 4, Section 18-175

V.3 Foxboro 63U-B and 63U-F Duplex Alarm Specification – Foxboro Composite Books, PBNP VTM # 00623A, Book 4 - Rev. 11, Section 18-692.

V.4 User Guide HP 34401A Multimeter, VTM # 01692, Rev. 0

V.5 #1250-C694, "KW Steam Turbine Operation and Control", Rev. 79, VTM 00119A, Book 1

V.6 Foxboro 66B Current Repeater Specifications – Foxboro Composite Books, PBNP VTM # 00623A, Book 4 - Rev. 11, Sections 18-655 – 18-657

V.7 Combustion Engineering, Inc., "SAS/PPCS Computer System – Volume 21 – Manual Reinstated 5/30/03 Equipment in Plant", PBNP VTM #01055U, Revision 11, Tab F, "RTP7436/10 Digital and Analog Loopback and Calibration Card."

V.8 Combustion Engineering, Inc. 1485-ICE 1234, Rev. 2, "Functional Design Description for Seismic Safety Parameter Display System (SSPDS)", PBNP VTM #01209, Book 4, Rev. 21

V.9 Combustion Engineering, Inc. 1485-ICE 1239, Rev. 2, "Functional Design Description for Safety Assessment System and Plant Process Computer System", PBNP VTM #01209, Book 5, Rev. 21.

4.5 Calculations

C.1 Calculation PBNP-IC-06, Rev. 0, "Foxboro 63U-BC Bistable Drift Calculation"

C.2 EE 2005-0006, Rev. 0, "Drift Calculations Evaluation"

C.3 Calculation No. PBNP-IC-07, Rev. 0, "Westinghouse 252 Indicator Drift Calculation"

5.0 ASSUMPTIONS

5.1 Validated Assumptions

5.1.1 It is assumed that the As-Left setting tolerances for the instruments evaluated in this calculation are as follows:

Transmitter	= ± 0.20 mAdc
Bistable	= ± 2.0 mVdc
I/I Converter	= ± 0.20 mAdc
PPCS	= ± 3.25 psig
Indicator	= ± 0.80 mAdc

Basis: These As-Left setting tolerance values have historically provided acceptable instrument performance and consistency in the calibration program. These As-Left setting tolerances are routinely achievable for the installed instruments, consistent with safety limits and test equipment capability. They are currently used in practice at the station, and implemented by calibration procedures listed in Section 4.3. As-Found setting tolerances are to be determined in this calculation.

5.1.2 It is assumed that the environmental temperature of the Control Room and Computer Room instrumentation is 120 °F.

Basis: Table 6-1 of WCAP-8587 (Reference G.7) states that when the HVAC is non-safety related, a normal temperature of 120 °F (loss of chiller) should be used. Since the Control Room and Computer Room HVAC System chiller is not powered from an essential power bus, the Control Room and Computer Room HVAC System is considered a non-safety related system.

5.1.3 It is assumed that the accuracy of the PPCS display loop is ± 0.51 % of full scale. This accuracy value applies to the loop from the PPCS analog input field terminations to the PPCS printed and/or display output devices. The accuracy value includes the temperature effect, power supply effect, humidity effect, radiation effect, seismic (vibration) effect, and drift over the entire PPCS normal operating range.

Basis: Per Reference G.16, the PPCS replacement modification shall process inputs and outputs from existing I/O devices. As such, the existing signal processing I/O isolation and signal conversion cards were not replaced as a result of Modification Request 98-002 (Reference G.17). References V.8 and V.9 document that under normal operating environments, the maximum total system error for the old PPCS computer system from field terminations to the printed and/or display output shall be within ± 0.5 % of the full scale (excluding errors before input of the analog input).

A review of all Westinghouse Plant Computer Replacement Reports revealed that the output values for all newly installed PPCS equipment (not including the existing I/O devices discussed in the above paragraph) shall be within 0.1 % of hand calculated results, with the following two exceptions:

1) For results based on polynomial curves, the output values shall be within 1.0 % of hand calculated results (Reference G.18)

2) For results based on steam tables, the output values shall be within 0.5 % of hand calculated results (References G.18 and G.19).

The PPCS points considered in this calculation display the turbine impulse pressure (in units of %) based on a 10.00-50.00 mAdc input signal from the loop rack components. Since the turbine impulse pressure loop is not a component of References G.18 or G.19, accuracy values associated with polynomial curves and steam tables are not applicable and the accuracy of the newly installed PPCS equipment (not including the existing I/O devices) is considered to be 0.1%.

Therefore, to determine the overall PPCS system accuracy, the specified values of 0.1% (for newly installed PPCS equipment) and 0.5% (for existing PPCS equipment) are combined using the SRSS methodology as follows:

$$\text{PPCS a} \quad = \pm\sqrt{0.5^2 + 0.1^2} \quad = \pm 0.51\%$$

In accordance with Section 3.3.3.3 of Reference G.1, if the manufacturer does not specify environmental errors associated with the subject normal environmental accuracy ratings these effects are considered to be included in the specified accuracy ratings or are considered to be negligible.

Per Reference V.7, the PPCS analog-to-digital (A/D) converters have a drift value of ± 0.01 % for a period of 1-year. This value is not significant when compared to the much larger accuracy value of ± 0.51 %. Per Reference G.20, the A/D converters are calibrated approximately every 36 weeks to eliminate any potential drift. In addition these components historically never need to be calibrated because they do not drift. Therefore, the vendor specified drift value is considered negligible.

Per Section 3.3.3.15 of Reference G.1, in the absence of a vendor specified drift value, it is typical for the device accuracy to be substituted in place of drift. However, in the case of PPCS, considering an additional ± 0.51 % for calculating the As-Found Tolerance would create a value large enough to allow PPCS degradation to go undetected. Conversely, by assuming that the drift value is included in the accuracy value, the As-Found Tolerance would remain tight enough to detect PPCS degradation prior to system failure. Therefore, the PPCS drift is conservatively encompassed by the ± 0.51 % accuracy value.

5.2 Unvalidated Assumptions

None

6.0 DESIGN INPUTS

6.1 Loop Definitions

The turbine impulse pressure trip instrumentation loop analyzed in this calculation is shown in block diagram format in Figure 6.2-1, and is explained in more detail in Sections 6.3 and 6.4.

6.2 Loop Block Diagram

The loop diagram shown below (Figure 6.2-1) shows the component configuration (per References D.1 – D.12) for the instrument loop analyzed in this calculation. The diagram below applies to both units. Note that the instrument loops shown with dotted line are not evaluated in this calculation and are shown solely for completeness.

Figure 6.2-1: Loop Block Diagram

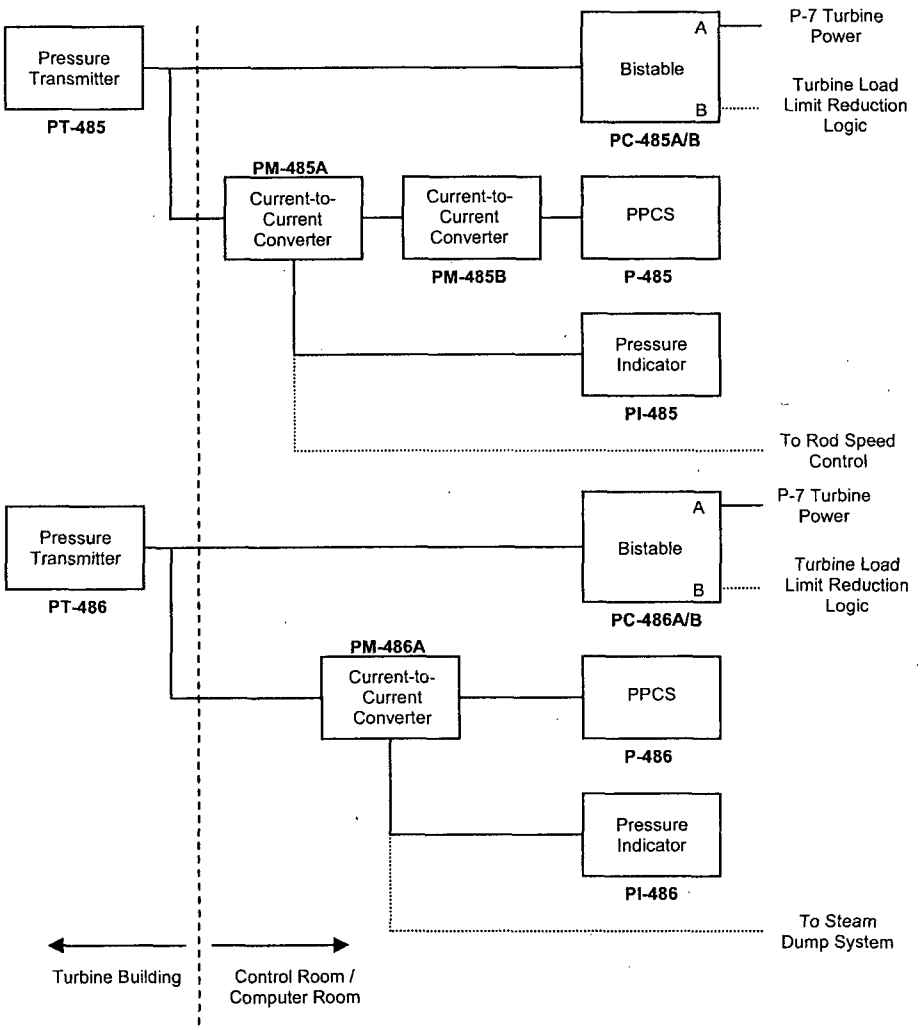

6.3 Component Model and Tag Numbers

Table 6.3-1: Turbine Impulse Pressure Trip Instruments

Component	Make / Model	Equipment Tag Number	Reference
Pressure Transmitter	Foxboro 611GM	1(2)PT-485, 1(2)PT-486	P.5, P.6
Bistable	63U-BC	1(2)PC-485A, 1(2)PC-486A	D.1 – D.12
I/I Converter	66BC-O	1(2)PM-485A, 1(2)PM-486A, 1(2)PM-485B	D.1 – D.12
PPCS	-	1(2)P-485, 1(2)P-486	P.7 – P.9
Indicator	Westinghouse HX-252	1(2)PI-485, 1(2)PI-486	P.7 – P.9

6.4 Range List

Table 6.4-1: Range List

Component	Instrument Numbers	Input	Output	Reference
Pressure Transmitter	1(2)PT-485 1(2)PT-486	0.0 – 650.0 psig	10.00 – 50.00 mAdc	P.5, P.6
Bistable	1(2)PC-485A 1(2)PC-486A	10.00 – 50.00* mAdc	-	P.1 – P.4
I/I Converter	1(2)PM-485A 1(2)PM-486A 1(2)PM-485B	10.00 – 50.00* mAdc	10.00 – 50.00 mAdc	P.7 – P.9
PPCS	1(2)P-485 1(2)P-486	10.00 – 50.00 mAdc	0.00 – 650.00 psig	P.7 – P.9
Indicator	1(2)PI-485 1(2)PI-486	10.00 – 50.00 mAdc	0.0 – 650 psig	P.7 – P.9

*During calibration, the inputs of the bistables and I/I converters 2PM-485A, 1(2)PM-485B and 2PM-486A are read across 10 ohm resistors, resulting in calibration input ranges of 0.1000 – 0.5000 Vdc (References P.7 – P.9).

6.5 Environmental Considerations

The P-7 permissive blocks or unblocks reactor trips during power operation; therefore, the turbine impulse pressure trip setpoint is only evaluated under normal environmental conditions.

Since the unblocking of the P-7 permissive enables certain reactor trips, the turbine impulse pressure input to P-7 is considered to be safety related.

6.5.1 Turbine Building

The pressure transmitters evaluated in this calculation are located at elevation 44' in the Turbine Building (References P.5 and P.6).

Reference G.6 states that the temperature in the Turbine Building may range from 65°F to 115°F, based on a maximum exterior temperature range of -15°F to 95°F.

Per Reference G.7, the peak humidity in the Turbine Building for normal conditions is 70%.

According to Table 6-3 of Reference G.7, areas outside containment have a maximum radiation of 400 RAD (40-year normal dose). As such, this value will be considered the maximum radiation dose for the Turbine Building.

Table 6.5-1: Turbine Building Ambient Environmental Conditions

Plant Conditions	Environmental Loop Classification	Min. Temp. (°F)	Calibration Temp. (°F)	Max. Temp. (°F)	Max. Humidity (%)	Max. Radiation (RAD)
Normal	Safety Related	65	65	115	70	400

6.5.2 Control Room and Computer Room

The rack devices evaluated in this calculation are located in the Computer Room (References P.1 – P.4).

The Control Room HVAC System controls the temperature of the Control Room and the Computer Room at 75 °F per Reference G.6. Per FSAR Section 9.8.1 (Reference G.3), the temperature can vary ± 10 °F, resulting in a minimum temperature of 65 °F. This temperature variation is supported by the fact that the Johnson Controls T-4002-202 thermostat (Reference D.13) in the Control Room is capable of controlling the room temperature (Reference V.1) within these bounds. In accordance with Section 3.3.4.7 of Reference G.1, a calibration temperature of 65°F is chosen for the components in the Control Room and Computer Room.

Per Assumption 5.1.2, a maximum Control Room temperature of 120°F is chosen for the subject instrument loops. This maximum temperature corresponds to the environmental conditions associated with a loss of the Control Room HVAC cooling unit. The choice of this maximum temperature is justified by the intended function of the turbine impulse pressure bistables (i.e. these components are safety-related, and are required to operate correctly under compromised environmental conditions).

The Control Room maximum humidity of 50% and 95 % (loss of chiller) is documented in Table 6-1 of Reference G.7. The fifth paragraph of FSAR Section 11.6.2 (Reference G.3) states that the Control Room is in Zone I, and Table 11.6-1 states that the maximum dose rate in Zone I is 1.0 mrem/hr.

Table 6.5-2: Control Room and Computer Room Ambient Environmental Conditions

Plant Conditions	Environmental Loop Classification	Min. Temp. (°F)	Calibration Temp. (°F)	Max. Temp. (°F)	Max. Humidity (%)	Max. Radiation (mrem/hr)
Normal	Safety Related	65	65	120	95	1.0

6.6 Process Considerations

Turbine Impulse Pressure

The PBNP high pressure turbine is a double flow element, consisting of a central control stage followed by ten stages of reaction blading (Reference V.5). Steam enters the high pressure turbine near the center and flows axially in opposite directions: first, through a control stage—a nozzle block and a single stage of rotating impulse blading (which together form a "Rateau" stage)—and then through the ten reaction stages. The pressure in the chamber where the impulse blading is located is called either "impulse pressure" or "first-stage pressure".

In the design of a Westinghouse pressurized water reactor, turbine impulse pressure serves as an index of turbine power and is used for both control and protection functions (Reference G.10). Since turbine impulse pressure serves as an index of turbine power, the value for the impulse pressure permissive setpoint is supposed to simply be a percentage of the full-load turbine impulse pressure, and no process correction is necessary to account for the relationship between turbine impulse pressure expressed in psia and turbine power. Reference G.21 (CT-20214) expresses the linear relationship between turbine power and impulse pressure (1st stage pressure).

As discussed in Attachment D, it is recommended that the nominal field trip setpoint for the turbine impulse pressure input to the P-7 permissive be changed from the current setting of 8% of full-load turbine impulse pressure to the originally recommended value of 10% of full-load turbine impulse pressure where impulse pressure is expressed in psia. This is the value at which the low power reactor trips will be automatically unblocked on increasing power.

6.7 Full-Load Impulse Pressure

Per modification packages MR 02-019 and MR 02-020 and calculation PBNP-IC-48-01-B, the full-load impulse pressure was projected to be 553 psig following the 1.4% power uprate. This value was determined by simply increasing the former full-load value of 545 psig by a factor of 1.014. Actual plant data, however, shows that impulse pressure at full-load conditions never reaches the projected limit of 553 psig.

Reference G.14 (Attachment C) establishes the full-load impulse pressure to be 558.7 psia (544 psig) using PPCS data at the present power level. This value is nominal and is used as the starting point for the P-7 trip setpoint evaluation.

Calculation PBNP-IC-48-01-B is not impacted nor is it superseded by this calculation. The difference between the projected first stage pressure in PBNP-IC-48-01-B and Reference G.14 (Attachment C) is tracked via A/R 01096811.

7.0 METHODOLOGY

7.1 Scaling Determination

7.1.1 Transmitter Scaling

In accordance with DG-I02, "Instrument Scaling Methodology" (Reference G.2), an instrument's output is determined by converting process values to a scaled output signal range via the applicable scaling equation. If the process is linear, the process values can be converted to the appropriate output engineering units via the standard algebraic 'point-slope' equation.

From Section 3.4.3 of Reference G.2, the point-slope equation is used as follows:

$$y - y_1 = m * (x - x_1)$$
$$m = (y_2 - y_1) / (x_2 - x_1)$$
$$y = m * (x - x_1) + y_1$$

where:

x	=	Process value variable, a known input
x_1	=	Process value variable, at 0 % span
x_2	=	Process value variable, at 100 % span
y	=	Analog value variable, an unknown output
y_1	=	Analog value at 0 % span
y_2	=	Analog value at 100 % span
m	=	Slope, or gain of the function, scale factor

Per Section 6.6, the turbine impulse pressure serves as an index of turbine power; however, per the original PBNP heat balance design (Reference G.21), the relationship between turbine impulse pressure and power is based on absolute pressure. Since the transmitter scaling is based on a span of 0-650 psig, there will be an offset in the impulse pressure transmitter's representation of turbine power (other than at 100% power), due to the difference between absolute and gauge pressure.

7.1.2 Bistable Scaling

The turbine impulse pressure trip bistable is scaled as follows:

$$\text{Setpoint(Vdc)} = \left(\frac{(\text{full - load pressure})(\text{Setpoint}(\%))}{\text{transmitter calibrated span}}\right)(\text{bistable span}) + (0\% \text{ bistable span})$$

This methodology is used for both FTSP, Operability limits and AV setpoints.

7.2 Uncertainty Determination

Uncertainties and loop errors are calculated in accordance with Point Beach Nuclear Plant's Instrument Setpoint Methodology, DG-I01 (Reference G.1). This methodology uses the square root of the sum of the squares (SRSS) method to combine random and independent errors, and algebraic addition of non-random or bias errors. Any deviations from this methodology are noted accordingly.

A) Treatment of 95/95 and 75/75 Values

To convert 95/95 uncertainty values to 75/75 uncertainty values (when applicable), this calculation uses the conversion factor specified in Section 3.3.3.13 of Reference G.1. All individual instrument uncertainties are evaluated and shown as 95/95 values, and are combined under the Total Loop Error radical as such. Conversion to a 75/75 value is performed after the 95/95 TLE radical is computed.

B) Treatment of Significant Digits and Rounding

This uncertainty calculation adheres to the rules below for the treatment of numerical results.

1) For values less than 10^2, the rounding of discrete calculated instrument uncertainties (e.g. reference accuracy, temperature effect, etc.) should be performed such that the numerical value is restricted to three (3) or less digits shown to the right of the decimal point.

   For example, an uncertainty calculated as 0.6847661 should be listed (and carried through the remainder of the calculation) as 0.685.

   An uncertainty calculated as 53.235487 should be listed (and carried through the remainder of the calculation) as 53.235.

2) For values less than 10^3, but greater than or equal to 10^2, the rounding of discrete calculated instrument uncertainties (e.g. reference accuracy, temperature effect, etc.) should be performed such that the numerical value is restricted to two (2) or less digits shown to the right of the decimal point.

   For example, an uncertainty calculated as 131.6539 should be listed (and carried through the remainder of the calculation) as 131.65.

3) For values greater than or equal to 10^3, the rounding of discrete calculated instrument uncertainties (e.g. reference accuracy, temperature effect, etc.) should be performed such that the numerical value is restricted to one (1) or less digits shown to the right of the decimal point.

   For example, an uncertainty calculated as 2251.4533 should be listed (and carried through the remainder of the calculation) as 2251.5.

4) For Total Loop Uncertainties, the calculated result should be rounded to the numerical precision that is readable on the associated loop indication or

recorder. If the loop of interest does not have an indicator or recorder, the Total Loop Error should be rounded to the numerical precision currently used in the associated calibration procedure for the end device in that loop (e.g. trip unit or alarm unit).

5) For calibration tolerances, the calculated result should be rounded to the numerical precision currently used in the associated calibration procedure.

These rules are intended to preserve a value's accuracy, while minimizing the retention of insignificant or meaningless digits. In all cases, the calculation preparer shall exercise judgment when rounding and carrying numerical values to ensure that the values are kept practical with respect to the application of interest.

7.3 Drift Considerations

The drift values established in Reference C.1 are utilized for the bistables based on the justification included in Reference C.2.

Use of the aforementioned drift value (as design input to this calculation) is based on justification provided by Engineering Evaluation 2005-0006 (Reference C.2). This evaluation reviews the station's M&TE and M&TE control programs, based on requirements imposed by the methodology used to prepare instrument setpoint and uncertainty calculations for the station (Reference G.1). The evaluation concludes that the station's M&TE and M&TE control programs have remained equivalent or improved since the drift calculations were initially prepared, therefore rendering the drift calculations acceptable for use in current (present-day) calculation revisions performed for the station.

7.4 Sources of Uncertainty

Per Reference G.1, the device uncertainties to be considered for normal environmental conditions include the following:

Sensor Drift	(Sd)
Sensor M&TE	(Sm)
Sensor Setting Tolerance	(Sv)
Bistable Drift	(Bd)
Bistable M&TE	(Bm)
Bistable Setting Tolerance	(Bv)
Current-to-Current Converter Drift	(I/Id)
Current-to-Current Converter M&TE	(I/Im)
Current-to-Current Converter Setting Tolerance	(I/Iv)
PPCS Drift	(PPCSd)
PPCS M&TE	(PPCSm)
PPCS Setting Tolerance	(PPCSv)
Indicator Drift	(Id)

Indicator M&TE	(Im)
Indicator Setting Tolerance	(Iv)

The uncertainties will be calculated in percent of span and converted to the process units as required.

Per Section 3.3.3.13 of Reference G.1, the uncertainties listed above are considered 2 sigma (95% probability/95% confidence) unless otherwise specified.

7.5 As-Found Tolerance Equation Summary

As-Found tolerances are calculated independently for each of the loop components. The equations shown are adapted from Section 3.3.8.6 of Reference G.1 for use in this calculation.

7.5.1 Sensor As-Found Tolerance (SAF)

The acceptable As-Found tolerance for the sensor is calculated by the following equation:

$$SAF = \pm \sqrt{Sv^2 + Sd^2 + Sm^2} \qquad \text{(Eq. 7.5.1)}$$

where:

Sv = Sensor Tolerance
Sd = Sensor Drift
Sm = Sensor M&TE error

7.5.2 Bistable As-Found Tolerance (BAF)

The acceptable As-Found tolerance for the bistable is calculated by the following equation:

$$BAF = \pm \sqrt{Bv^2 + Bd^2 + Bm^2} \qquad \text{(Eq. 7.5.2)}$$

where:

Bv = Bistable Tolerance
Bd = Bistable Drift
Bm = Bistable M&TE error

7.5.3 Current-to-Current Converter As-Found Tolerance (I/IAF)

The acceptable As-Found tolerance for the current-to-current converter is calculated by the following equation:

$$I/IAF = \pm \sqrt{I/Iv^2 + I/Id^2 + I/Im^2} \qquad \text{(Eq. 7.5.3)}$$

where:

I/Iv = Current-to-Current Converter Tolerance
I/Id = Current-to-Current Converter Drift
I/Im = Current-to-Current Converter M&TE error

7.5.4 PPCS As-Found Tolerance (PPCSAF)

The acceptable As-Found tolerance for the PPCS is calculated by the following equation:

$$PPCSAF = \pm \sqrt{PPCSv^2 + PPCSd^2 + PPCSm^2} \qquad \text{(Eq. 7.5.4)}$$

where:

PPCSv = PPCS Tolerance
PPCSd = PPCS Drift
PPCSm = PPCS M&TE error

7.5.5 Indicator As-Found Tolerance (IAF)

The acceptable As-Found tolerance for the indicator is calculated by the following equation:

$$IAF = \pm \sqrt{Iv^2 + Id^2 + Im^2} \qquad \text{(Eq. 7.5.5)}$$

where:

Iv = Indicator Tolerance
Id = Indicator Drift
Im = Indicator M&TE error

7.6 As-Left Tolerance Equation Summary

Per Section 3.3.8.5 of Reference G.1, the As-Left tolerances are calculated independently for the rack components, sensor and indicator.

7.6.1 Sensor As-Left Tolerance (SAL)

The As-Left tolerance for the sensor is equal to its setting tolerance:

$$SAL = \pm Sv \qquad \text{(Eq. 7.6.1)}$$

where:

Sv = Sensor Setting Tolerance

7.6.2 Bistable As-Left Tolerance (BAL)

The As-Left tolerance for the bistable is equal to its setting tolerance:

$$BAL = \pm Bv \quad \text{(Eq. 7.6.2)}$$

where:

Bv = Bistable Setting Tolerance

7.6.3 Current-to-Current Converter As-Left Tolerance (I/IAL)

The As-Left tolerance for the current-to-current converter is equal to its setting tolerance:

$$I/IAL = \pm I/Iv \quad \text{(Eq. 7.6.3)}$$

where:

I/Iv = Current-to-Current Converter Setting Tolerance

7.6.4 PPCS As-Left Tolerance (PPCSAL)

The As-Left tolerance for the PPCS is equal to its setting tolerance:

$$PPCSAL = \pm PPCSv \quad \text{(Eq. 7.6.4)}$$

where:

PPCSv = PPCS Setting Tolerance

7.6.5 Indicator As-Left Tolerance (IAL)

The As-Left tolerance for the indicator is equal to its setting tolerance:

$$IAL = \pm Iv \quad \text{(Eq. 7.6.5)}$$

where:

Iv = Indicator Setting Tolerance

7.7 Operability Limit (OL) Equation Summary

Per Section 3.3.8.2 of Reference G.23, the Operability Limit (OL) is defined as a calculated limiting value that the As-Found bistable setpoint is allowed to have during a Technical Specification surveillance Channel Operational Test (COT), beyond which the instrument channel is considered inoperable and corrective action must be taken. Two OLs are calculated, one on each side of the FTSP as-left tolerance band, incorporating a calculated 3-sigma (3σ) drift value. A channel found drifting beyond its 3σ drift value is considered to be operating abnormally (i.e., is inoperable).

Per Section 3.3.8.4 of Reference G.23, the OL on each side of the FTSP is calculated as follows:

$$OL^{+} = FTSP + [BAL^{2} + Bd_{3\sigma}^{2}]^{1/2} \quad \text{(Eq. 7.7-1)}$$

$$OL^{-} = FTSP - [BAL^{2} + Bd_{3\sigma}^{2}]^{1/2} \quad \text{(Eq. 7.7-2)}$$

Where:

the FTSP is expressed in percent of span
OL^{+} is the Operability Limit above the FTSP
OL^{-} is the Operability Limit below the FTSP
BAL is the rack as-left tolerance (typically the bistable tolerance)
$Bd_{3\sigma}$ is the 3σ rack drift value determined as follows:

$$Bd_{3\sigma} = (1.5)\, Bd_{2\sigma} \quad \text{(Eq. 7.7-3)}$$

The rack drift value ($Bd_{2\sigma}$) is the 2-sigma drift value for components checked during the COT, typically the bistable drift.

The FTSP is defined in terms of percent of full-load turbine impulse pressure (544 psig) and the instrument uncertainties are defined in terms of percent of span (650 psi). The OLs are calculated in percent span and then converted to percent of full-load turbine pressure.

7.8 Allowable Value

Reference G.1 does not provide a methodology for determining the AV for a permissive trip. As such, this calculation determines the AV according to the methodology set forth in DIT CRR-I&C-012 (Reference G.22). The AV as defined in CRR-I&C-012 is equivalent to the operability Limit (OL^{+}) defined in Section 7.7., therefore the AV is equal to the OL^{+}.

8.0 BODY OF CALCULATION

8.1 Transmitter Scaling

Per Section 7.1.1,

$$y - y_1 = m * (x - x_1)$$
$$m = (y_2 - y_1) / (x_2 - x_1)$$
$$y = m * (x - x_1) + y_1$$

where:

x = Process value variable, a known input
x_1 = Process value variable, at 0 %Span
x_2 = Process value variable, at 100 %Span
y = Analog value variable, an unknown output
y_1 = Analog value at 0 %Span
y_2 = Analog value at 100 %Span
m = Slope, or gain of the function, scale factor

Per Section 7.1.1, the transmitter is scaled for a span of 0.0 – 650.0 psig. Per Table 6.4-1, the transmitter output is 10.00 – 50.00 mAdc. Therefore,

x_1 = 0.0 psig
x_2 = 650.0 psig
y_1 = 10.00 mAdc
y_2 = 50.00 mAdc

m = (50.00 mAdc – 10.00 mAdc) / (650.0 psig – 0.0 psig)
m = (40.00 mAdc) / (650.0 psig)

y = (40.00 mAdc) / (650.0 psig) * (x – 0.0 psig) + 10.00 mAdc

Input (psig)	Output (mAdc)
0.0	10.00
150.0	19.23
300.0	28.46
450.0	37.69
650.0	50.00

8.2 Device Uncertainty Analysis

8.2.1 Sensor Drift (Sd)

Per Reference V.2, the sensor accuracy is ± 0.5% of the output span. Drift is unspecified by the vendor (Reference V.2). Per Section 3.3.3.15 of Reference G.1, in the absence of an appropriate drift analysis and when drift is unspecified by the vendor, the instrument's accuracy is used to represent the instrument drift over the entire calibration period.

Sd = ± 0.500 % span

8.2.2 Sensor M&TE (Sm)

Per References P.5 and P.6, the sensor is calibrated with a pressure tester capable of measuring 650 psig on the input and a multimeter capable of measuring 10-50 mAdc on the output.

Input M&TE:
For the Ashcroft Pressure Gauge (range of 1500 psig) – (Reference P.10):

RA_{mte} = uncertainty * instrument range
RA_{mte} = ± 0.25 % full scale * 1500 psig
RA_{mte} = ± 3.75 psig
RA_{std} = 0
RD_{mte} = ± 2.5 psig

Using the equations in Section 3.3.4.4 of Reference G.1:

$$Sm_A = \pm\sqrt{3.75^2 + 0^2 + 2.5^2} = \pm 4.507 \text{ psig}$$

For the Heise Pressure Gauge (range of 1000 psig) – (Reference P.10):

RA_{mte} = uncertainty * instrument range
RA_{mte} = ± 0.1 % full scale * 1000 psig
RA_{mte} = ± 1 psig
RA_{std} = 0
RD_{mte} = ± 0.5 psig

Using the equations in Section 3.3.4.4 of Reference G.1:

$$Sm_H = \pm\sqrt{1.0^2 + 0^2 + 0.5^2} = \pm 1.118 \text{ psig}$$

For conservatism, the uncertainty of the Ashcroft Pressure Gauge (Sm_A) is selected as the sensor input M&TE (Sm_{PT}) because it is the least accurate of the potential input M&TE instruments. Converting from psig into % span:

Sm_{PT} = ± uncertainty * (100 % span / calibrated span)

Sm_{PT} = ± 4.507 psig * (100 % span / 1000 psig)
Sm_{PT} = ± 0.451 % span

Output M&TE:

<u>For the Fluke 45 Multimeter (fast resolution, 5 digit display, 100 mAdc range) – (Reference P.10):</u>

RA_{mte} = uncertainty * max reading
RA_{mte} = ± 0.05 % reading * 50 mAdc
RA_{mte} = ± 0.025 mAdc
RA_{std} = 0
RD_{mte} = ± 2 DGTS * 0.01 mAdc
RD_{mte} = ± 0.02 mAdc

Using the equations in Section 3.3.4.4 of Reference G.1:

$$Sm_{45} = \pm\sqrt{0.025^2 + 0^2 + 0.02^2} = \pm 0.032\,\text{mAdc}$$

Sm_{45} = uncertainty * (100% span / calibrated span)
Sm_{45} = ± 0.032 mAdc * (100% span / 40 mAdc)
Sm_{45} = ± 0.080 % span

<u>For the HP 34401A multimeter (6.5 digit display, 100 mAdc range) – (Reference V.4):</u>

RA_{mte} = ± (0.050 % reading + 0.005 % range)
RA_{mte} = ± [0.050 % (50 mAdc) + 0.005 % (100 mAdc)]
RA_{mte} = ± 0.03 mAdc
RA_{std} = 0
RD_{mte} = ± 0.0001 mAdc

Using the equations in Section 3.3.4.4 of Reference G.1:

$$Sm_{HP} = \pm\sqrt{0.03^2 + 0^2 + 0.0001^2} = \pm 0.03\,\text{mAdc}$$

Sm_{HP} = uncertainty * (100 % span / calibrated span)
Sm_{HP} = ± 0.03 mAdc * (100 % span / 40 mAdc)
Sm_{HP} = ± 0.075 % span

For conservatism, the uncertainty of the Fluke 45 (Sm_{45}) is selected as the sensor output M&TE (Sm_{MM}) because it is the least accurate of the potential output M&TE instruments.

Using the equations in Section 3.3.4.4 of Reference G.2 to combine the total effects of all M&TE used in calibrating the sensor:

$$Sm = \pm\sqrt{Sm_{MM}^{\ 2} + Sm_{PT}^{\ 2}}$$

Sm $= \pm\sqrt{0.451^2 + 0.080^2}$

Sm = ± 0.458 % span

8.2.3 Sensor Setting Tolerance (Sv)

Per Section 5.1.1, the sensor setting tolerance is ± 0.20 mAdc.

Sv = sensor setting tolerance / calibrated span * 100%
Sv = ± 0.20 mAdc / 40 mAdc * 100%

Bv = ± 0.500 % span

8.2.4 Bistable Drift (Bd)

Reference C.1 has determined the historical drift values for Foxboro Model 63U-BC bistables. The quarterly bistable drift value is ± 0.212% span. Per References P.1 – P.4, the bistables are calibrated during reactor outages, every 18 months. Per Section 3.3.4.3 of Reference G.1, the drift value is extended by 25%. Therefore,

Bd = ± 0.212 % span * (18 months / 3 months) * 1.25 %
Bd = ± 1.59 % span

8.2.5 Bistable M&TE (Bm)

Reference C.1 has determined the historical drift values for Foxboro Model 63U-BC bistables. Per Section 3.3.3.15 of Reference G.1, when drift values have been statistically derived from As-Found/As-Left calibration data, the M&TE uncertainty is included in the instrument drift value. Therefore,

Bm = ± 0.000 % span

8.2.6 Bistable Setting Tolerance (Bv)

Per Section 5.1.1, the bistable setting tolerance is ± 2.0 mVdc.

Bv = bistable setting tolerance / calibrated span * 100%
Bv = ± 2.0 mVdc / 400 mVdc * 100%

Bv = ± 0.500 % span

8.2.7 Current-to-Current Drift (I/Id)

Reference V.6 does not provide a drift specification for the current-to-current converter. Per Section 3.3.3.15 of Reference G.1, when drift is not specified by the vendor, the accuracy of the component is used as the drift for the entire calibration period. Therefore,

I/Id = ± 0.500 % span

8.2.8 Current-to-Current M&TE (I/Im)

Per References P.7 – P.9, the current-to-current converter is calibrated with a multimeter capable of measuring 0.1000 – 0.5000 Vdc or 10.00 – 50.00 mAdc on the input and 10.00 – 50.00 mAdc on the output. The Fluke 45 and HP 34401A are capable of performing these measurements.

Input M&TE:

For the HP 34401A multimeter (6.5 digit display, 1.0 Vdc range) (Ref. V.4):

RA_{mte} = ± (0.0040 % RDG + 0.0007 % range)
RA_{mte} = ± [0.0040 % (0.5 Vdc) + 0.0007 % (1.0 Vdc)]
RA_{mte} = ± 0.000027 Vdc
RA_{std} = 0
RD_{mte} = ± 0.000001 Vdc

From Section 3.3.4.4 of Reference G.1, M&TE uncertainty is calculated using the following equation:

$$m = \pm\sqrt{RA^2_{mte} + RA^2_{std} + RD^2_{mte}}$$

$$I/Im_{HP} = \pm\sqrt{0.000027^2 + 0^2 + 0.000001^2} = \pm 0.000027 \text{ Vdc}$$

I/Im_{HP} = ± 0.000027 Vdc * (100% span / 0.4 Vdc)
I/Im_{HP} = ± 0.0068 % span

For the Fluke 45 multimeter (5 digit display, 3.0 Vdc range) (Ref. P.10):

RA_{mte} = ± 0.025% * RDG
RA_{mte} = ± 0.025% * 0.5 Vdc
RA_{mte} = ± 0.000125 Vdc
RA_{std} = 0
RD_{mte} = ± 2 DG * 0.0001 Vdc
RD_{mte} = ± 0.0002 Vdc

From Section 3.3.4.4 of Reference G.1, M&TE uncertainty is calculated using the following equation:

$$m = \pm\sqrt{RA^2_{mte} + RA^2_{std} + RD^2_{mte}}$$

$$I/Im_{45\text{-}1} = \pm\sqrt{0.000125^2 + 0^2 + 0.0002^2} = \pm 0.000236 \text{ Vdc}$$

$I/Im_{45\text{-}1}$ = uncertainty * (100% span / calibrated span)
$I/Im_{45\text{-}1}$ = ± 0.000236 Vdc * (100% span / 0.4 Vdc)
$I/Im_{45\text{-}1}$ = ± 0.059 % span

Input/Output M&TE:

Fluke 45 multimeter (5 digit display, 100 mAdc range) (Ref. P.10):

RA_{mte} = uncertainty * max reading
RA_{mte} = ± 0.05% RDG * 50 mAdc
RA_{mte} = ± 0.025 mAdc
RA_{std} = 0 (per Reference G.1)
RD_{mte} = ± 2 DGTS * 0.01 mAdc
RD_{mte} = ± 0.02 mAdc

From Section 3.3.4.4 of Reference G.1, M&TE uncertainty is calculated using the following equation:

$$m = \pm\sqrt{RA^2_{mte} + RA^2_{std} + RD^2_{mte}}$$

$$I/I\,m_{45\text{-}2} = \pm\sqrt{0.025^2 + 0^2 + 0.02^2} = \pm 0.0320 \text{ mAdc}$$

$I/Im_{45\text{-}2}$ = ± 0.0320 mAdc * (100% span / 40 mAdc)
$I/Im_{45\text{-}2}$ = ± 0.080 % span

HP 34401A multimeter (6.5 digit display, 100 mAdc range) (Ref. V.4):

RA_{mte} = ± (0.050 % RDG + 0.005 % range)
RA_{mte} = ± [0.050 % (50 mAdc) + 0.005 % (100 mAdc)]
RA_{mte} = ± 0.030 mAdc
RA_{std} = 0 (per Reference G.1)
RD_{mte} = ± 0.0001 mAdc

From Section 3.3.4.4 of Reference G.1, M&TE uncertainty is calculated using the following equation:

$$m = \pm\sqrt{RA^2_{mte} + RA^2_{std} + RD^2_{mte}}$$

$$I/Im_{HP} = \pm\sqrt{0.030^2 + 0^2 + 0.0001^2} = \pm 0.030 \text{ mAdc}$$

I/Im_{HP} = ± 0.030 mAdc * (100% span / 40 mAdc)
I/Im_{HP} = ± 0.075 % span

The worst case and bounding input and output M&TE error is $I/Im_{45\text{-}2}$ = ±0.080 % span.

Total M&TE:

The total M&TE uncertainty for the calibration of the current-to-current converter is calculated using the multiple M&TE equation given in Section 3.3.4.4 of Reference G.1:

$$I/Im = \pm\sqrt{m_1^2 + m_2^2 + \ldots m_n^2}$$

I/Im $= \pm\sqrt{0.080^2 + 0.080^2}$

I/Im = ± 0.113 % span

8.2.9 Current-to-Current Setting Tolerance (I/Iv)

Per Section 5.1.1, the current-to-current converter setting tolerance is ± 0.20 mAdc.

I/Iv = setting tolerance / calibrated span * 100%
I/Iv = ± 0.20 mAdc / 40 mAdc * 100%

I/Iv = ± 0.500 % span

8.2.10 PPCS Drift (PPCSd)

Per Assumption 5.1.3, the drift for the PPCS is included in the accuracy term. Therefore, drift is considered negligible.

PPCSd = 0.000 % span

8.2.11 PPCS M&TE (PPCSm)

Per References P.7 – P.9, the PPCS display is calibrated using a multimeter appropriate for 10 – 50 mAdc at the PPCS input and reading the PPCS display at the output. The M&TE effect is due to the multimeter used at the PPCS input and the reading error at the output.

Input:

Fluke 45 multimeter (5 digit display, 100 mAdc range) (Ref. P.10):

RA_{mte} = uncertainty * max reading
RA_{mte} = ± 0.05% RDG * 50 mAdc
RA_{mte} = ± 0.025 mAdc
RA_{std} = 0 (per Reference G.1)
RD_{mte} = ± 2 DGTS * 0.01 mAdc
RD_{mte} = ± 0.02 mAdc

From Section 3.3.4.4 of Reference G.1, M&TE uncertainty is calculated using the following equation:

$$m = \pm\sqrt{RA^2_{mte} + RA^2_{std} + RD^2_{mte}}$$

$$PPCSm_{45} = \pm\sqrt{0.025^2 + 0^2 + 0.02^2} = \pm 0.0320 \text{ mAdc}$$

$PPCSm_{45}$ = ± 0.0320 mAdc * (100% span / 40 mAdc)
$PPCSm_{45}$ = ± 0.080 % span

HP 34401A multimeter (6.5 digit display, 100 mAdc range) (Ref. V.4):

RA_{mte} = ± (0.050 % RDG + 0.005 % range)
RA_{mte} = ± [0.050 % (50 mAdc) + 0.005 % (100 mAdc)]
RA_{mte} = ± 0.030 mAdc
RA_{std} = 0 (per Reference G.1)
RD_{mte} = ± 0.0001 mAdc

From Section 3.3.4.4 of Reference G.1, M&TE uncertainty is calculated using the following equation:

$$m = \pm\sqrt{RA^2_{mte} + RA^2_{std} + RD^2_{mte}}$$

$$PPCSm_{HP} = \pm\sqrt{0.030^2 + 0^2 + 0.0001^2} = \pm 0.030\,mAdc$$

$PPCSm_{HP}$ = ± 0.030 mAdc * (100% span / 40 mAdc)
$PPCSm_{HP}$ = ± 0.075 % span

For conservatism, the uncertainty of the Fluke 45 ($PPCSm_{45}$) is selected as the PPCS output M&TE because it is the least accurate of the potential output M&TE instruments.

Output:
Per Reference P.7 – P.9, the impulse pressure PPCS indication has a scale of 0.00 psig - 650.00 psig. Per Reference P.7 – P.9, the PPCS display has two decimal places. Per Reference G.1, Section 3.3.5.3, the readability error for a digital display is the least significant digit.

Therefore,

$PPCSm_{REA}$ = ± 0.002 % span

The total M&TE uncertainty for the calibration of the PPCS is calculated using the multiple M&TE equation given in Section 3.3.4.4 of Reference G.1:

$$m = \pm\sqrt{m_1^2 + m_2^2 + \ldots m_n^2}$$

$$PPCSm = \pm\sqrt{PPCSm_{45}^2 + PPCSm_{REA}^2}$$

$$PPCS\,m = \pm\sqrt{0.080^2 + 0.002^2}$$

PPCSm = ±0.080 %Span

8.2.12 PPCS Setting Tolerance (PPCSv)

Per Assumption 5.1.1, the PPCS Setting Tolerance is ± 3.25 psig. Therefore,

PPCSv = ± calibration tolerance * (100 % span /650 psig)
= ± 3.25 psig * (100 % span / 650 psig)

PPCSv = ± 0.500 % span

8.2.13 Indicator Drift (Id)

Reference C.3 has determined historical drift values for the Westinghouse indicators. Since the indicators are calibrated every 18 months (References P.7 – P.9), the 2-year drift value is conservatively used. Per Reference C.3, the indicator drift is as follows:

Id = ± 1.028 % span (2 year interval)

8.2.14 Indicator M&TE (Im)

Reference C.3 has determined historical drift values for the Westinghouse indicators. Per Reference G.1, when drift error values have been statistically derived from As-Found/As-Left calibration data, the indicator M&TE effects are included in the instrument drift value.

Im = ± 0.000 % span

8.2.15 Indicator Setting Tolerance (Iv)

Per Assumption 5.1.1, the indicator setting tolerance is ± 0.80 mAdc. Therefore,

Iv = ± calibration tolerance * (100 % span / 40.00 mAdc)
= ± 0.80 mAdc * (100 % span / 40.00 mAdc)

Iv = ± 2.000 % span

8.3 Uncertainty Summary

8.3.1 Sensor

Parameter	Uncertainty	Reference Section
Sensor Drift (Sd)	± 0.500 % span	8.2.1
Sensor M&TE (Sm)	± 0.458 % span	8.2.2
Sensor Setting Tolerance (Sv)	± 0.500 % span	8.2.3

8.3.2 Bistable

Parameter	Uncertainty	Reference Section
Bistable Drift (Bd)	± 1.590 % span	8.2.4
Bistable M&TE (Bm)	± 0.000 % span	8.2.5
Bistable Setting Tolerance (Bv)	± 0.500 % span	8.2.6

8.3.3 Current-to-Current Converter

Parameter	Uncertainty	Reference Section
Current-to-Current Converter Drift (I/Id)	± 0.500 % span	8.2.7
Current-to-Current Converter M&TE (I/Im)	± 0.113 % span	8.2.8
Current-to-Current Converter Setting Tolerance (I/Iv)	± 0.500 % span	8.2.9

8.3.4 PPCS

Parameter	Uncertainty	Reference Section
PPCS Drift (PPCSd)	± 0.000 % span	8.2.10
PPCS M&TE (PPCSm)	± 0.080 % span	8.2.11
PPCS Setting Tolerance (PPCSv)	± 0.500 % span	8.2.12

8.3.5 Indicator

Parameter	Uncertainty	Reference Section
Indicator Drift (Id)	± 1.028 % span	8.2.13
Indicator M&TE (Im)	± 0.000 % span	8.2.14
Indicator Setting Tolerance (Iv)	± 2.000 % span	8.2.15

8.4 Setpoint Evaluation (for current power level)

Per Section 6.6, the Field Trip Setpoint (FTSP) is established at 10% full-load turbine impulse pressure. Per Section 6.7, the full-load turbine impulse pressure is 544 psig (558.7 psia). The FTSP is calculated as follows (results are rounded down for conservatism):

FTSP = 10% (558.7 psia)
FTSP = 55.87 psia
FTSP = 41.1 psig

When the FTSP is expressed in % span,

FTSP = (41.1 psig) / (650 psi) = 6.32 % span

Per Section 7.1.2,

$$\text{FTSP(Vdc)} = \left(\frac{\text{FTSP}}{\text{transmitter calibrated span}}\right)(\text{bistable span}) + (0\%\ \text{bistable span})$$

Substituting,

$$\text{FTSP(Vdc)} = \left(\frac{41.1\ \text{psig}}{650\ \text{psi}}\right)(400.0\ \text{mVdc}) + (100.0\ \text{mVdc})$$

Therefore, the bistable is scaled as follows:

FTSP(Vdc) = 125.2 mVdc

Per References P.1 – P.4, the existing FTSP is set at 44.24 psig (127.2 mVdc). Since the calculated FTSP is less than the existing FTSP, the existing FTSP should be revised, per Section 2.0.

8.5 Operability Limit Determination

Operability Limits are established for the as-found value of the trip bistable during the Tech Spec Channel Operational Test (COT) surveillance, to determine if the bistable is operating within its 3-sigma drift limits. Two Operability Limits are determined for the trip function, one on each side of the FTSP.

Per Section 7.7, the OL on each side of the FTSP is calculated by applying the square-root-sum-of-the-squares combination of As-Left tolerance and 3σ drift to the FTSP.

8.5.1 $Bd_{3\sigma}$ Evaluation

Using Equation 7.7-3 to determine the bistable 3σ drift value,

$Bd_{3\sigma} = (1.5)^* Rd_{2\sigma}$ (Eq. 7.7-3)
$Bd_{3\sigma} = 1.5^* \pm 1.590$ % span ($Bd_{2\sigma}$ from Section 8.3.2)
$Bd_{3\sigma} = \pm 2.385$ % span

8.5.2 OL^+ Evaluation

Using Equation 7.7-1, the OL^+ is determined as:

$OL^+ = FTSP + [BAL^2 + Rd_{3\sigma}^2]^{1/2}$ (Eq. 7.7-1)

$OL^+ = [(41.1psig)*(100\%/650psi)] + (0.500^2 + 2.385^2)^{1/2}$ (BAL is B_v from Section 8.3.2)

$OL^+ = 6.32\%$ Span + 2.44% Span

$OL^+ = 8.76$ % span

Because the turbine impulse pressure transmitter measures gauge pressure (not absolute pressure) and is spanned 0-650 psig, converting OL^+ from % span to psig: Expressed in psig:

$OL^+ = (0.0876 * 650psi) = 56.94$ psig

Converting to psia:

$OL^+ = 56.94$ psig + 14.7 psi = 71.64 psia

Because turbine full-load impulse pressure is 558.7 psia, converting to % turbine full-load;

$OL^+ = (71.64$ psia$)/(558.7$ psia$) = 12.82\%$ turbine full load

Because OL^+ will be used as the P-7 Unblock Allowable Value, the value is conservatively rounded down to one decimal place:

OL^+ = **12.8% turbine full load**

The impulse pressure in psia and psig corresponding to a conservative 12.8% is:

OL^+ = (12.8%)*(558.7 psi) = **71.51 psia**

OL^+ = 71.51 psia - 14.7 psi = **56.81 psig**

Scaling OL^+ in Vdc per Section 7.1.2,

OL^+ (Vdc) =(OL^+ / Transmitter Span)*(Bistable Span) + (0% Bistable Span)

OL^+ (Vdc) =(56.81 psig / 650 psi)*(400.0 mVdc) + (100.0 mVdc)

OL^+ (Vdc) = **134.96 mVdc**

The value is rounded for calibration readability to 135.0 mVdc.

8.5.3 OL^- Evaluation

Using Equation 7.7-2, the OL^- is determined as:

$OL^- = FTSP - [BAL^2 + Bd_{3\sigma}^2]^{1/2}$ (Eq. 7.7-2)

$OL^- = [(41.1psig)*(100\%/650psi)]$
$- (0.500^2 + 2.385^2)^{1/2}$
$OL^- = 6.32\%$ Span - 2.44% Span
$OL^- = 3.88$ % span

Expressed in psig:

OL^- = (0.0388 * 650psi) = **25.22 psig**

Converting to psig:

OL^- = 25.22 psig + 14.7 psi = **39.92 psia**

Converting to % turbine full-load;

OL^- = (39.92 psia)/(558.7 psia) = **7.15% turbine full load**

Per Section 7.1.2,

OL^- (Vdc) =(OL^- / Transmitter Span)*(Bistable Span) + (0% Bistable Span)

OL^- (Vdc) =(25.22 psig / 650 psi)*(400.0 mVdc) + (100.0 mVdc)

OL^- (Vdc) = **115.52 mVdc**

The value is rounded for calibration readability to 115.5 mVdc.

8.5.4 COT Evaluation

Because the Turbine Full-Load (P-7) is an increasing setpoint, the positive OL^+ value of 56.81 psig (≤ 12.8% turbine full load) should be the limit compared to the COT as-found value to determine Technical Specification operability of the channel. However, an as-found value found outside either the OL^+ or OL^- indicates that the channel is operating abnormally.

8.6 Allowable Value

The AV according to Section 7.8 is equivalent to the OL^+ as evaluated in Section 8.5. Therefore:

AV = OL^+ = **≤ 12.8% turbine full load**

Per Attachment D, this calculation determines a new AV. Therefore, the existing AV should be revised to reflect the value calculated above.

8.7 Acceptable As-Found Tolerances

8.7.1 Sensor As-Found Tolerance (SAF)

Using Equation 7.5.1,

$$SAF = \pm \sqrt{Sv^2 + Sd^2 + Sm^2}$$

where:

Sv = 0.500 % span
Sd = 0.500 % span
Sm = 0.458 % span

$$SAF = \pm \sqrt{0.500^2 + 0.500^2 + 0.458^2}$$

SAF = ± 0.842 % span

Converting from % span to mAdc and rounding to procedure precision:

SAF = ± 0.842 % span * (40 mAdc / 100% span)
SAF = ± 0.34 mAdc

8.7.2 Bistable As-Found Tolerance (BAF)

Using Equation 7.5.2,

$$BAF = \pm \sqrt{Bv^2 + Bd^2 + Bm^2}$$

where:

Bv = 0.500 % span
Bd = 1.590 % span
Bm = 0.000 % span

$$BAF = \pm \sqrt{0.500^2 + 1.590^2 + 0.000^2}$$

BAF = ± 1.667 % span

Converting from % span to mVdc and rounding to procedure precision:

BAF = ± 1.667% span * (400 mVdc / 100% span)
BAF = ± 6.7 mVdc

Converting from % span to process units and rounding to procedure precision:

BAF = ± 1.667% span * (650 psi / 100% span)

BAF = ± 10.8 psi

8.7.3 Current-to-Current Converter As-Found Tolerance (I/IAF)

Using Equation 7.5.3,

$$I/IAF = \pm \sqrt{I/Iv^2 + I/Id^2 + I/Im^2}$$

where:

I/Iv = 0.500 % span
I/Id = 0.500 % span
I/Im = 0.113 % span

$$I/IAF = \pm \sqrt{0.500^2 + 0.500^2 + 0.113^2}$$

I/IAF = ± 0.716 % span

Converting from % span to mAdc and rounding to procedure precision:

I/IAF = ± 0.716 % span * (40 mAdc / 100% span)
I/IAF = ± 0.29 mAdc

8.7.4 PPCS As-Found Tolerance (PPCSAF)

Using Equation 7.5.4,

$$PPCSAF = \pm \sqrt{PPCSv^2 + PPCSd^2 + PPCSm^2}$$

where:

PPCSv = 0.500 % span
PPCSd = 0.000 % span
PPCSm = 0.080 % span

$$PPCSAF = \pm \sqrt{0.500^2 + 0.000^2 + 0.080^2}$$

PPCSAF = ± 0.506 % span

Converting from % span to psig and rounding to procedure precision:

PPCSAF = ± 0.506 % span * (650.00 psi / 100% span)
PPCSAF = ± 3.30 psi

8.7.5 Indicator As-Found Tolerance (IAF)

Using Equation 7.5.5,

$$IAF = \pm \sqrt{Iv^2 + Id^2 + Im^2}$$

where:

Iv = 2.000 % span
Id = 1.028 % span
Im = 0.000 % span

$$IAF = \pm \sqrt{2.000^2 + 1.028^2 + 0.000^2}$$

IAF = ± 2.249 % span

Converting from % span to mAdc and rounding to procedure precision:

IAF = ± 2.249 % span * (40 mAdc / 100% span)
IAF = ± 0.90 mAdc

8.8 Acceptable As-Left Tolerances

8.8.1 Sensor As-Left Tolerance (SAL)

SAL = ± Sv — Equation 7.6.1
SAL = ± 0.500% span — Section 8.3.1

Converting from % span to mAdc and rounding to procedure precision:

SAL = ± 0.500% span * (40 mAdc / 100 % span)
SAL = ± 0.20 mAdc

8.8.2 Bistable As-Left Tolerance (BAL)

BAL = ± Bv — Equation 7.6.2
BAL = ± 0.500% span — Section 8.3.2

Converting from % span to mVdc and rounding to procedure precision:

BAL = ± 0.500% span * (400.0 mVdc / 100 % span)
BAL = ± 2.0 mVdc

Converting from % span to process units and rounding to procedure precision:

BAL = ± 0.500% span * (650 psi / 100 % span)
BAL = ± 3.3 psi

8.8.3 Current-to-Current Converter As-Left Tolerance (I/IAL)

I/IAL = ± I/Iv — Equation 7.6.3
I/IAL = ± 0.500% span — Section 8.3.3

Converting from % span to mAdc and rounding to procedure precision:

I/IAL = ± 0.500% span * (40.0 mAdc / 100 % span)
I/IAL = ± 0.20 mAdc

8.8.4 PPCS As-Left Tolerance (PPCSAL)

PPCSAL= ± PPCSv — Equation 7.6.4
PPCSAL= ± 0.500% span — Section 8.3.4

Converting from % span to psig and rounding to procedure precision:

PPCSAL= ± 0.500% span * (650.00 psi / 100 % span)
PPCSAL= ± 3.25 psi

8.8.5 Indicator As-Left Tolerance (IAL)

IAL = ± Iv — Equation 7.6.5
IAL = ± 2.000% span — Section 8.3.5

Converting from % span to mAdc and rounding to procedure precision:

IAL = ± 2.000% span * (40.00 mAdc / 100 % span)
IAL = ± 0.80 mAdc

9.0 RESULTS AND CONCLUSIONS WITH LIMITATIONS

9.1 Transmitter Scaling

The transmitter scaling values shown below are determined in Sections 8.1.

Input (psig)	Output (mAdc)
0.0	**10.00**
150.0	**19.23**
300.0	**28.46**
450.0	**37.69**
650.0	**50.00**

It should be noted that the scaling results are in terms of psig, as detailed in Section 7.1.1.

9.2 Setpoint, Operability Limits and Allowable Value Evaluation

The FTSP, Operability Limits and AV are calculated in terms of percent of full-load turbine impulse pressure. The full-load impulse pressure value used in this calculation is per Reference G.14 (Attachment C), and differs from the value established in calculation PBNP-IC-48-01-B. A/R 01096811 tracks the difference between these two full-load impulse pressure values.

Per Sections 8.4, 8.5 and 8.6, the turbine impulse pressure P-7 permissive FTSP, Operability Limits and AV are as follows:

	Calculated/Recommended	Existing
FTSP	10 % turbine full-load	8 % turbine full-load
in psig:	41.1 psig	44.24 psig
in mVdc:	125.2 mVdc	127.2 mVdc
OL^+	12.8 % turbine full-load	None
in psig:	56.81 psig	
in mVdc:	135.0 mVdc	
OL^-	7.15 % turbine full-load	
in psig:	25.22 psig	
in mVdc:	115.5 mVdc	
AV	≤ 12.8 % turbine full-load	< 10 % turbine full-load
in psig:	≤ 56.81 psig	< 55.3 psig
in mVdc:	≤ 135.0 mVdc	< 134.0 mVdc

The existing FTSP and AV should be replaced with the calculated values shown above.

9.3 Acceptable As-Left and As-Found Tolerances

This calculation has determined acceptable As-Found and As-Left tolerances for the instruments listed in Section 1.5. The calibration procedures identified in Section 10.0 should be revised as appropriate. No changes to the existing As-Left tolerances are found to be necessary.

Instruments	As-Found / As-Left	Tolerance	Reference
1(2)PT-485 1(2)PT-486	SAF	± 0.34 mAdc	Section 8.6.1
1(2)PC-485A 1(2)PC-486A	BAF	± 6.7 mVdc ± 10.8 psi	Section 8.6.2
1(2)PM-485A 1(2)PM-485B 1(2)PM-486A	I/IAF	± 0.29 mAdc	Section 8.6.3
1(2)P-485 1(2)P-486	PPCSAF	± 3.30 psi	Section 8.6.4
1(2)PI-485 1(2)PI-486	IAF	± 0.90 mAdc	Section 8.6.5
1(2)PT-485 1(2)PT-486	SAL	± 0.20 mAdc	Section 8.7.1
1(2)PC-485A 1(2)PC-486A	BAL	± 2.0 mVdc ± 3.3 psi	Section 8.7.2
1(2)PM-485A 1(2)PM-485B 1(2)PM-486A	I/IAL	± 0.20 mAdc	Section 8.7.3
1(2)P-485 1(2)P-486	PPCSAL	± 3.25 psi	Section 8.7.4
1(2)PI-485 1(2)PI-486	IAL	± 0.80 mAdc	Section 8.7.5

9.4 Setpoint Diagram

Figure 9.4: Proposed P-7 Unblock Setpoint Relationship

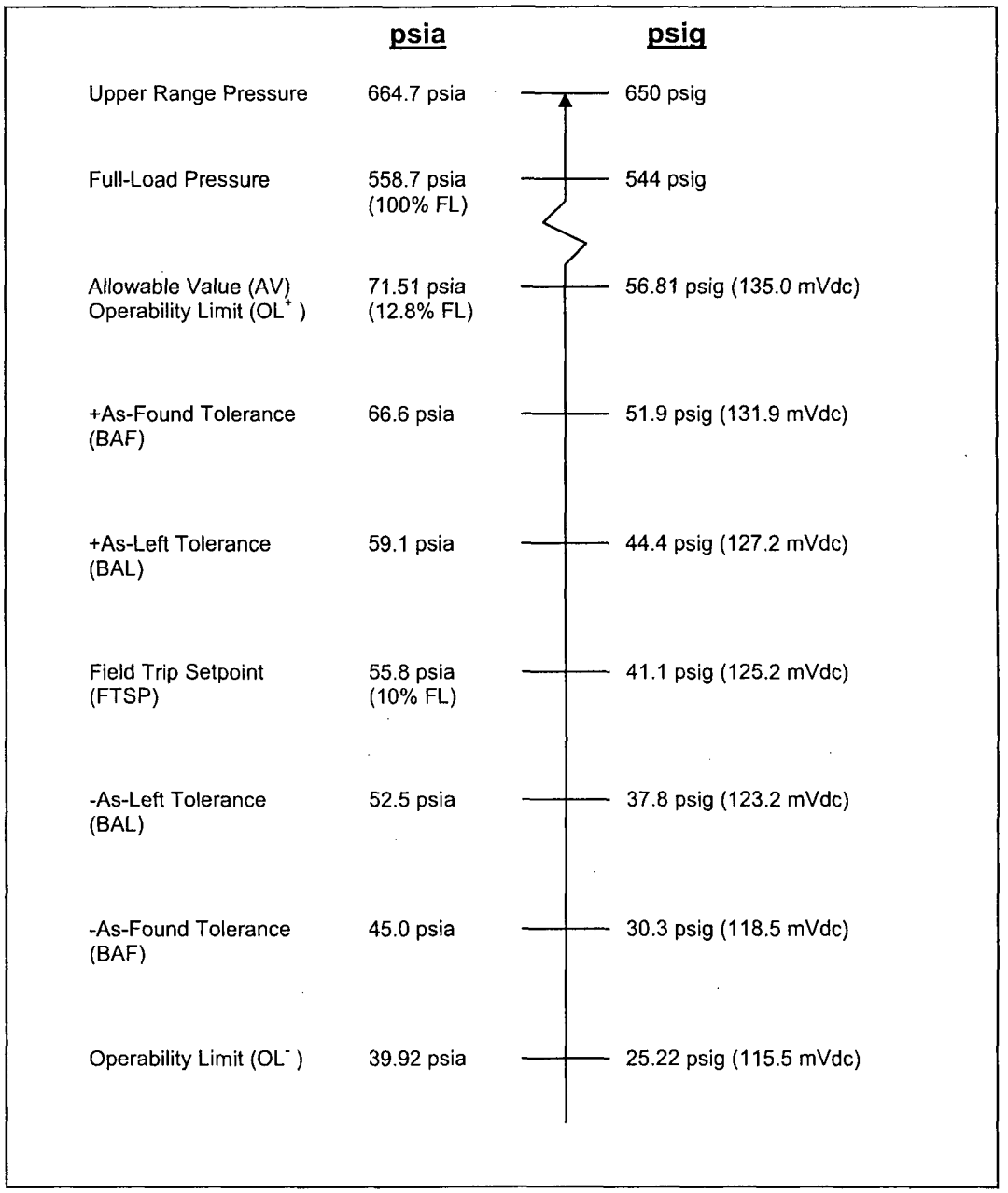

9.5 M&TE Limitations

To preserve the validity of this calculation's results, this calculation requires that all future calibrations of the equipment (addressed in this calculation) be performed using the M&TE mentioned below (or better).

M&TE	Range	Accuracy	Readability	Reference
Ashcroft Pressure Gauge	0 – 1500 psig	± 0.25 % FS	2.5 psi	Section 8.2.2
Fluke 45	0 – 100 mAdc	± 0.05 % RDG	0.02 mAdc	Section 8.2.2, Section 8.2.8, Section 8.2.11
Fluke 45	0 – 3Vdc	± 0.25 % RDG	0.0002 Vdc	Section 8.2.8
HP 34401A	0 – 100 mAdc	± 0.050 % RDG + 0.005 % range	0.0001 mAdc	Section 8.2.2, Section 8.2.8, Section 8.2.11
HP 34401A	0 – 1 Vdc	± 0.0040 % RDG + 0.0007 % range	0.001 mVdc	Section 8.2.8

9.6 Temperature Limitations

The results of this calculation are valid only if the temperature inside of the Control /Computer Room instrumentation panels does not exceed 120 °F. GAR 01031656 has been generated to track this limitation.

9.7 Implementation Limitation

Changes recommended by this calculation, such as revised P-7 permissive unblock FTSP, Operability Limits, AV values and new As-Found and As-Left tolerances, are NOT to be implemented without approval of the PBNP Design Authority or the appointed designee.

10.0 IMPACT ON PLANT DOCUMENTS

Note: Passport Engineering Change (EC) Number for calculation 2007-0001 Rev. 0 is EC 10078.

- 1ICP 02.020WH, Rev. 10, "Post-Refueling Pre-Startup RPS and ESF White Channel Analog Surveillance Test"

  Revise the bistable setpoint to reflect the FTSP established in this calculation and incorporate new AV, Operability Limits and As-Found tolerances determined in this calculation for 1PC-485A. Passport A/R No. 1075501 will track the generated change to this document.

- 2ICP 02.020WH, Rev. 10, "Post-Refueling Pre-Startup RPS and ESF White Channel Analog Surveillance Test"

  Revise the bistable setpoint to reflect the FTSP established in this calculation and incorporate new AV, Operability Limits and As-Found tolerances determined in this calculation for 2PC-485A. Passport A/R No. 1075501 will track the generated change to this document.

- 1ICP 02.020BL, Rev. 10, "Post-Refueling Pre-Startup RPS and ESF Blue Channel Analog Surveillance Test"

  Revise the bistable setpoint to reflect the FTSP established in this calculation and incorporate new AV, Operability Limits and As-Found tolerances determined in this calculation for 1PC-486A. Passport A/R No. 1075501 will track the generated change to this document.

- 2ICP 02.020BL, Rev. 10, "Post-Refueling Pre-Startup RPS and ESF Blue Channel Analog Surveillance Test"

  Revise the bistable setpoint to reflect the FTSP established in this calculation and incorporate new AV, Operability Limits and As-Found tolerances determined in this calculation for 2PC-486A. Passport A/R No. 1075501 will track the generated change to this document.

- 1ICP 04.010-1, Rev. 7, "First Stage Pressure Outage Calibrations"

  Incorporate the new transmitter As-Found tolerances determined in this calculation. Passport A/R No. 1075501 will track the generated change to this document.

- 2ICP 04.010-1, Rev. 7, "First Stage Pressure Outage Calibrations"

  Incorporate the new transmitter As-Found tolerances determined in this calculation. Passport A/R No. 1075501 will track the generated change to this document.

- STPT 3.1, Rev. 11, "Point Beach Nuclear Plant Setpoint Document; Reactor Trip Interlocks"

  Revise the bistable setpoint to reflect the FTSP determined in this calculation. Passport A/R No. 1075501 will track the generated change to this document.

- PBNP Technical Specifications, Section 3.3.1, Amendment 201 (Unit 1), 206 (Unit 2)

The Allowable Value shown in the Tech Spec should be revised to reflect the value determined in this calculation.

- 1ICP 04.001J, Rev. 4, "Reactor Protection and Safeguards Analog Racks Pressurizer Level and First Stage Pressure Outage Calibration"

  Incorporate new As-Found tolerances determined in this calculation for 1PM-485A, 1PM-486A, 1PI-485, 1PI-486 and 1P-486. Passport A/R No. 1075501 will track the generated change to this document.

- 2ICP 04.001J, Rev. 4, "Reactor Protection and Safeguards Analog Racks Pressurizer Level and First Stage Pressure Outage Calibration"

  Incorporate new As-Found tolerances determined in this calculation for 2PM-485A, 2PM-486A, 2PI-485, 2PI-486 and 2P-486. Passport A/R No. 1075501 will track the generated change to this document.

- ICP 5.18, Rev. 28, "Rod Speed Control"

  Incorporate new As-Found tolerances determined in this calculation for 1(2)PM-485B and 1(2)P-485. Passport A/R No. 1075501 will track the generated change to this document.

- PBNP Technical Specifications Bases, Section 3.3.1, Amendment 201 (Unit 1), 206 (Unit 2)

  Revise the list of reactor trips associated with the P-7 permissive to match that of the FSAR. Passport GAR No. 01096811 has been initiated to track this change.

11.0 ATTACHMENT LIST

Attachment A, Instrument Scaling (6 pages)

Attachment B, DIT CRR-I&C-012, Reference G.22 (5 pages)

Attachment C, DIT CRR-I&C-013, Reference G.14 (3 pages)

Attachment D, Setpoint for Turbine Impulse Pressure Input to P-7 (2 pages)

12.0 10 CFR 50.59 Review

10 CFR 50.59 screening SCR 2007-0081-00 was prepared to support implementing the limits determined by this calculation into the associated calibration procedures. The screening concluded that a 50.59 evaluation and UFSAR change are not required as a result of the addition of calibration limits listed in Section 9.7 above.

NRC prior approval of a licensing amendment is required in order to implement the revised values in the Technical Specifications for the RPS Allowable Value (Operability Limits) associated with the P-7 permissive functions. The purpose of a 50.59 review is to determine if prior NRC approval is necessary to implement changes to the plant. No 50.59 review is necessary for revising the Technical Specification values because a license amendment is already acknowledged to be required. The present intent is to include the TS changes identified as EPU changes in this calculation for RPS and ESFAS setpoints in the Extended Power Uprate License Amendment Request.

Note that EPU implementation after the EPU license amendment is received from NRC will require separate screening and possibly full 50.59 evaluation of individual changes being made. For future EPU implementation, a separate 50.59 screening number (SCR 2008-178) and a separate 50.59 evaluation number (SE 2008-014) have been reserved.

ATTACHMENT A

Instrument Scaling

This calculation has determined Acceptable As-Found tolerances for all instruments identified in Section 1.4. The following tables illustrate the necessary modifications to calibration procedures P.1 - P.6 to account for these new tolerance values. The boxed-in fields represent the necessary changes; all other fields are provided for convenience only.

1(2) ICP 02.020WH:

TURBINE FIRST STAGE PRESSURE 1(2)PC-485A/B	BISTABLE LIGHT	PROCESS SETPOINT psig	SETPOINT Vdc	OUTPUT (Vdc)		LIMITS (Vdc)					
				AS-FOUND	AS-LEFT	AS-FOUND		OPERABILITY LIMITS		AS-LEFT	
						LOW	HIGH	LOW	HIGH	LOW	HIGH
Turb Pwr > 10.0% for (P7) Unblock	Turb Pwr >X% A(G)	41.1	0.1252↑			0.1185	0.1319	0.1155	0.1350	0.1232	0.1272
Reset A(G)											
• Technical Specification Limit • 1(2)-PC-485A ≤ 0.1350 Vdc (≤ 12.8 % full power turbine pressure)											
Load Limit Reduction	Load Limit Reduction Lo B(R)	442.4	0.3722↓			0.3655	0.3722	N/A	N/A	0.3702	0.3722
Reset B(R)											

1(2) ICP 02.020BL:

TURBINE FIRST STAGE PRESSURE 1(2)PC-486A/B	BISTABLE LIGHT	PROCESS SETPOINT psig	SETPOINT Vdc	OUTPUT (Vdc)		LIMITS (Vdc)					
				AS-FOUND	AS-LEFT	AS-FOUND		OPERABILITY LIMITS		AS-LEFT	
						LOW	HIGH	LOW	HIGH	LOW	HIGH
Turb Pwr > 10.0% for (P7) Unblock	Turb Pwr >X% A(G)	41.1	0.1252↑			0.1185	0.1319	0.1155	0.1350	0.1232	0.1272
Reset A(G)											
• Technical Specification Limit • 1(2)-PC-486A ≤ 0.1350 Vdc (≤ 12.8 % full power turbine pressure)											
Load Limit Reduction	Load Limit Reduction Lo B(R)	442.4	0.3722↓			0.3655	0.3722	N/A	N/A	0.3702	0.3722
Reset B(R)											

ATTACHMENT A

1(2) ICP 04.010-1:

EQUIP. ID: 1(2)PT-485 & 1(2)PT-486					MANUFACTURER: Foxboro		
DESCRIPTION: HP Turbine First Stage Pressure					MODEL: 611GM		
SCALING: 0.0 – 650.0 psig / 10.00 – 50.00 mAdc					LOCATION: El. 44′, Turbine Building		
INPUT	OUTPUT (mAdc)						
	IDEAL	AS-FOUND	LIMITS		AS-LEFT	LIMITS	
psig			LOW	HIGH		LOW	HIGH
0.0	10.00		9.66	10.34		9.80	10.20
150.0	19.23		18.89	19.57		19.03	19.43
300.0	28.46		28.12	28.80		28.26	28.66
450.0	37.69		37.35	38.03		37.49	37.89
650.0	50.00		49.66	50.34		49.80	50.20
450.3	37.69		37.35	38.03		37.49	37.89
300.0	28.46		28.12	28.80		28.26	28.66
150.0	19.23		18.89	19.57		19.03	19.43
0.0	10.00		9.66	10.34		9.80	10.20

ATTACHMENT A

1(2) ICP 04.001J:

EQUIP. ID: 1(2)PM-485A & 1(2)PM-486A					MANUFACTURER: Foxboro		
DESCRIPTION: Turbine 1st Stage Pressure I/I Converter					MODEL: 66BC-O		
SCALING: 10.00 – 50.00 mAdc / 10.00 – 50.00 mAdc					LOCATION: El. 44′, CB, CR		
TURBINE 1ST STG PRESS INPUT mAdc	OUTPUT (mAdc)						
	IDEAL	AS-FOUND	LIMITS		AS-LEFT	LIMITS	
			LOW	HIGH		LOW	HIGH
10.00	10.00		9.71	10.29		9.80	10.20
20.00	20.00		19.71	20.29		19.80	20.20
30.00	30.00		29.71	30.29		29.80	30.20
40.00	40.00		39.71	40.29		39.80	40.20
50.00	50.00		49.71	50.29		49.80	50.20

EQUIP. ID: 1(2)PI-485 & 1(2)PI-486					MANUFACTURER: Westinghouse		
DESCRIPTION: Turbine 1st Stage Press Indicator					MODEL: HX-252		
SCALING: 10.00 – 50.00 mAdc / 0.0 – 650.0 psig					LOCATION: El. 44′, CB, CR		
TURBINE 1ST STG PRESS OUTPUT psig	INPUT (mAdc)						
	IDEAL	AS-FOUND	LIMITS		AS-LEFT	LIMITS	
			LOW	HIGH		LOW	HIGH
0.0	10.00		9.10	10.90		9.20	10.80
170.0	20.46		19.56	21.36		19.66	21.26
330.0	30.31		29.41	31.21		29.51	31.11
490.0	40.15		39.25	41.05		39.35	40.95
650.0	50.00		49.10	50.90		49.20	50.80
490.0	40.15		39.25	41.05		39.35	40.95
330.0	30.31		29.41	31.21		29.51	31.11
170.0	20.46		19.56	21.36		19.66	21.26
0.0	10.00		9.10	10.90		9.20	10.80

EQUIP. ID: 2PM-485A & 2PM-486A					MANUFACTURER: Foxboro		
DESCRIPTION: Turbine 1st Stage Pressure I/I Converter					MODEL: 66BC-O		
SCALING: 10.00 – 50.00 mAdc / 10.00 – 50.00 mAdc					LOCATION: El. 44′, CB, CR		
TURBINE 1ST STG PRESS INPUT Vdc	OUTPUT (mAdc)						
	IDEAL	AS-FOUND	LIMITS		AS-LEFT	LIMITS	
			LOW	HIGH		LOW	HIGH
0.1000	10.00		9.71	10.29		9.80	10.20
0.2000	20.00		19.71	20.29		19.80	20.20
0.3000	30.00		29.71	30.29		29.80	30.20
0.4000	40.00		39.71	40.29		39.80	40.20
0.5000	50.00		49.71	50.29		49.80	50.20

ATTACHMENT A

EQUIP. ID: 1(2)P-486 PPCS Point ID					LOCATION: CT-9 1(2)C107		
DESCRIPTION: Turbine 1st Stage Pressure STM Dump							
SCALING: 10.00 – 50.00 mAdc / 0.00 – 650 psig							
INPUT	OUTPUT (psig)						
	IDEAL	AS-FOUND	LIMITS		AS-LEFT	LIMITS	
mAdc			LOW	HIGH		LOW	HIGH
10.00	0.00		-3.30	3.30		-3.25	3.25
20.00	162.50		159.20	165.80		159.25	165.75
30.00	325.00		321.70	328.30		321.75	328.25
40.00	487.50		484. 20	490.80		484.25	490.75
50.00	650.00		646.70	653.30		646.75	653.25

ATTACHMENT A

ICP 5.18

EQUIP. ID: 1(2)PM-485B					MANUFACTURER: Foxboro		
DESCRIPTION: Turbine 1st Stage Pressure to CI					MODEL: 66BC-O		
SCALING: 10.00 – 50.00 mAdc / 10.00 – 50.00 mAdc					LOCATION: El. 44', CB, CR		
TURBINE 1ST STG PRESS INPUT mAdc	OUTPUT (mAdc)						
	IDEAL	AS-FOUND	LIMITS		AS-LEFT	LIMITS	
			LOW	HIGH		LOW	HIGH
0.1000	10.00		9.71	10.29		9.80	10.20
0.2000	20.00		19.71	20.29		19.80	20.20
0.3000	30.00		29.71	30.29		29.80	30.20
0.4000	40.00		39.71	40.29		39.80	40.20
0.5000	50.00		49.71	50.29		49.80	50.20

EQUIP. ID: 1(2)P-485 PPCS Point ID					LOCATION:		
DESCRIPTION: Turbine 1st Stage Pressure to CI							
SCALING: 10.00 – 50.00 mAdc / 0.00 – 650 psig							
INPUT mAdc	OUTPUT (psig)						
	IDEAL	AS-FOUND	LIMITS		AS-LEFT	LIMITS	
			LOW	HIGH		LOW	HIGH
10.00	0.00		-3.30	3.30		-3.25	3.25
20.00	162.50		159.20	165.80		159.25	165.75
30.00	325.00		321.70	328.30		321.75	328.25
40.00	487.50		484.20	490.80		484.25	490.75
50.00	650.00		646.70	653.30		646.75	653.25

ATTACHMENT A

Per Section 9.8, to preserve the validity of this calculation's results, this calculation requires that all future calibrations of the equipment (addressed in this calculation) be performed using the M&TE mentioned below (or better). This table needs to be implemented in calibration procedures to provide the calibrator with a list of acceptable M&TE equipment.

M&TE	Range	Accuracy	Readability
Ashcroft Pressure Gauge	0 – 1500 psig	± 0.25 % FS	2.5 psig
Fluke 45	0 – 100 mAdc	± 0.05 % RDG	0.02 mAdc
Fluke 45	0 – 3Vdc	± 0.25 % RDG	0.0002 Vdc
HP 34401A	0 – 100 mAdc	± 0.050 % RDG + 0.005 % range	0.0001 mAdc
HP 34401A	0 – 1 Vdc	± 0.0040 % RDG + 0.0007 % range	0.001 mVdc

ATTACHMENT B

QF-0545 (FP-E-MOD-11) Rev. 0

NMC Committed to Nuclear Excellence
Fleet Modification Process

Design Information Transmittal (DIT)

From: Jim Nagell / Kim Strickland - Point Beach Nuclear Plant

To: Dean Crumpacker - Sargent & Lundy

Mod or Tracking Number: CRR Project Date: 6/4/07 DIT No: CRR-I&C-012

Mod Title: Treatment of Backup Trips and Permissives

Plant: PBNP Unit 1 ☐ Unit 2 ☐ Common ☒ Quality Classification: QA

SUBJECT: Backup trips and permissive setpoints lack an analytical limit for establishing a limiting trip setting. Allowable values for backup trips and permissives should be determined by applying a "3-sigma" drift value. DG-I01 does not currently address this issue. It will be revised to do so and until then the information provided by this DIT and Figure 3.3.8-2 gives sufficient information for use within CRR calculation revisions.

Check if applicable:

☐ **This DIT confirms information previously transmitted orally on _____ by _____.**

☐ **This information is preliminary. See explanation below.**

SOURCE OF INFORMATION (Source documents should be uniquely identified)

Graded Approach ISA-TR67.04.09-2005

DESCRIPTION OF INFORMATION (Write the information being transmitted or list each document being transmitted)

"Insert to DG-IO1 Section 3.3.8," position statement "Treatment of Backup Trips and Permissives."

ATTACHMENT B

QF-0545 (FP-E-MOD-11) Rev. 0

NMC Committed to Nuclear Excellence — Fleet Modification Process	Design Information Transmittal (DIT)

DISTRIBUTION (Recipients should receive all attachments unless otherwise indicated. All attachments are uncontrolled unless otherwise indicated)

PREPARED BY (The Preparer and Approver may be the same person.)

Preparer Name	Position	Signature	Date
Jim Nagell	Sr. Engineer	Jim Nagell	6/4/07

APPROVED BY (The cognizant Engineering Supervisor has release authority. Consult the Design Interface Agreement or local procedures to determine who else has release authority.)

Approver Name	Position	Signature	Date
Kelly Holt	Supv. Engineering	[illegible]	6-6-07

A copy of the DIT (along with any attachments not on file) should be sent to the modification fille

ATTACHMENT B

Insert to DG-I01 Section 3.3.8

Treatment of Backup Trips and Permissives

Backup/anticipatory trips and permissives are protection system features that are not credited in accident analyses for performing primary protective functions. Therefore, setpoints for these features lack an analytical limit for establishing a limiting trip setting. Although they are not credited in analyses, backup/anticipatory trips enhance overall reliability and diversity of the protection systems (i.e., provide defense-in-depth). Permissives (also called "operating bypasses" in IEEE-279) automatically enable protective functions at predetermined settings. For these reasons, backup trips and permissives are regarded as safety functions of the protection system, but perform no active role as trip functions assumed in accident analyses. By using a "graded approach" (ISA-TR67.04.09-2005) philosophy toward setpoints that lack analytical limits, backup trips and permissives can be calculated with less rigor than primary protection functions.

Based on discussion and correspondence[1] with Westinghouse regarding how setpoints are determined for backup trips and permissives, instrument uncertainties are neither required nor necessary to establish these setpoints. Setpoint uncertainties are not required because, unlike primary protective trips that have analytical limits, backup trips and permissives have no limit against which the uncertainties are applied. Instead, the setpoints for these protection system features are nominal values. These nominal values were typically provided for original plant operation (e.g., in WCAP-7116, Precautions, Limitations, and Settings) or have proven to be acceptable for safe and reliable operation over the years since plant startup. Therefore, historical precedent is an acceptable technical basis for establishing the nominal setpoint value for backup trips and permissives.

Some accident analyses may contain a "process limit" value for a backup trip as an input to the analysis. This analysis input may have been used to determine which of several trip functions occurred first in the accident, to determine which parameter performed the primary trip function. When the analysis demonstrates that a backup trip occurring at the process limit does not perform the primary trip function, the process limit should not be regarded as an analytical limit.

Although uncertainties are not needed to determine a nominal setpoint for backup trips and permissives, an evaluation should be made to verify that the nominal setpoint does not interfere with other operational limits/settings for the same parameter. Loop uncertainties may also be needed for other non-protection reasons such as determining setting tolerances.

Technical Specification Values for Backup Trips and Permissives

NRC regulation 10CFR50.36 requires that Limiting Safety System Settings (LSSS) be specified for protection system trips that protect Safety Limits. As discussed above, backup trips and permissives are not based on safety analysis limits. As a result, these functions do not meet the strict definition of a LSSS. However, backup/permissive functions are currently assigned a Tech Spec Allowable Value, even though the AV term is only appropriate for primary trips.

[1] Page 6 of Westinghouse letter WEP-94-525 dated 2/1/94.

ATTACHMENT B

As defined in the Technical Specifications, Allowable Values are as-found limits that apply to the portion of an instrument loop that is tested periodically during the Channel Operational Test (COT). Any uncertainties used to determine the Allowable Value are limited to the portion of the loop tested during the COT. The COT typically applies to the bistable portion, excluding the field sensor.

Allowable Values for backup trips and permissives should be determined by applying a "3-sigma" drift value for the COT-tested instruments to the as-left setting tolerance for the COT-tested instruments (i.e., the rack as-left tolerance), rather than a 2-sigma drift value used to determine the as-found limit. A 3σ drift value is an appropriate outlier criterion for an Allowable Value for backup trips and permissives that lack an analytical limit. Applying the 3σ drift to the rack as-left tolerance ensures that drift occurring beyond the AV limit is significant to 99.7% probability and that a channel exhibiting 3σ drift is declared inoperable rather than just evaluated for operability (which is the purpose of a Technical Specification Allowable Value, as compared to an as-found limit).

The rack as-left tolerance (RAL) applied during the COT should either be derived in the calculation or justified as a calculation assumption. See Section 3.3.8.6 [of DG-J01] for how to determine the rack as-left setting tolerance.

The rack 3σ drift value ($Rd_{3\sigma}$) can be derived from the 2σ rack drift value (Rd) by multiplying Rd by 1.5.

$$Rd_{3\sigma} = (1.5)\,Rd$$

As discussed in Section 3.3.8.6, the 2σ rack drift value should be obtained either from as-left/as-found drift analysis of the COT instrument string, or from the SRSS of the individual COT instrument drift values.

For an increasing trip, the Allowable Value for backup trips and permissives is then determined using the SRSS of RAL and $Rd_{3\sigma}$, as follows:

$$AV = FTSP + [RAL^2 + Rd_{3\sigma}^2]^{1/2}$$

A diagram of the relationship between the FTSP, RAL, RAF, and Allowable Value for backup trips and permissives is shown in Figure 3.3.8-2.

ATTACHMENT B

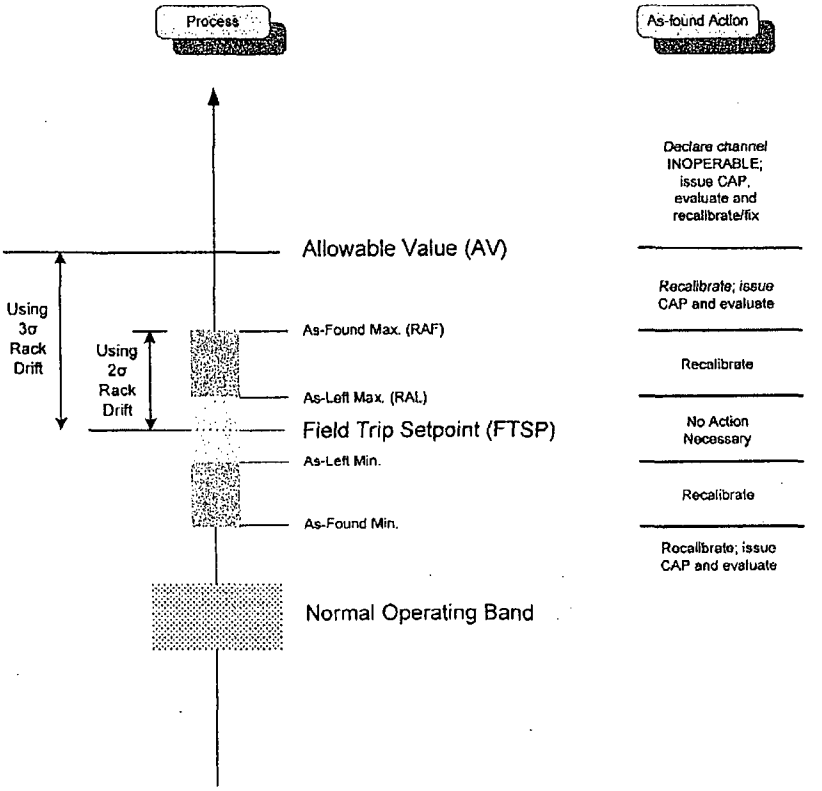

Figure 3.3.8-2

Backup Trip/Permissive Allowable Value
(for increasing trip)

ATTACHMENT C

QF-0545 (FP-E-MOD-11) Rev. 0

NMC Committed to Nuclear Excellence
Fleet Modification Process

Design Information Transmittal (DIT)

From: Jim Nagell - Point Beach Nuclear Plant

To : Dean Crumpacker - Sargent & Lundy

Mod or Tracking Number: Calculation 2007-0001 Date: 6/7/07 DIT No: CRR-I&C-013

Mod Title: Calculation 2007-0001 First Stage Pressure

Plant: Point Beach Unit 1 ☐ Unit 2 ☐ Common ☒ Quality Classification: QA

SUBJECT: Provide value for use as Turbine First Stage Pressue at full load for calculation 2007-0001.

Check if applicable:

☐ **This DIT confirms information previously transmitted orally on _____ by _____.**

☐ **This information is preliminary. See explanation below.**

SOURCE OF INFORMATION (Source documents should be uniquely identified)

Pressure data provided by PPCS of main turbine first stage pressure. The electronic file of the PPCS data run is maintained in the CRR project files with calculation 2007-0001. This data is reproducible from history records generated by the PBNP PPCS.

DESCRIPTION OF INFORMATION (Write the information being transmitted or list each document being transmitted)

Signed Statement of results and conclusion of PPCS main turbine first stage pressue with recommendation of specific first stage pressue for use in calculation 2007-0001.

DISTRIBUTION (Recipients should receive all attachments unless otherwise indicated. All attachments are uncontrolled unless otherwise indicated)

Dean Crumpacker - Sargent & Lundy and Greg Rainey - Sargent & Lundy

PREPARED BY (The Preparer and Approver may be the same person.)

Preparer Name	Position	Signature	Date
Jim Nagell	Sr. Engineer	Jim Nagell	6/7/07

APPROVED BY (The cognizant Engineering Supervisor has release authority. Consult the Design Interface Agreement or local procedures to determine who else has release authority.)

Approver Name	Position	Signature	Date
Kelly Holt	Supervisor	Kelly Holt	6-7-07

A copy of the DIT (along with any attachments not on file) should be sent to the modification fille

ATTACHMENT C

6/7/07

Turbine First Stage Pressure at Full Power

Data points for turbine first stage pressure were retrieved from the PPCS for the time frame of 5-25-07 to 6-3-07 taken at 1 hour intervals.

The results of this data recovery for the first stage pressures are as follows:

	Unit 1		Unit 2	
	Ch. P- 485	Ch. P-486	Ch. P-485	Ch. P-486
Average = Per Channel (in psig)	540.42056	544.91767	543.93195	545.6846
Average = Of the 4 Channels (in psig)	543.73869			

This value is rounded up to the next increment of average for all 4 channels to 544 psig.

Using the value of 544 psig for all channels, the following difference between the four channel average and each channel is as follows.

	Unit 1		Unit 2	
	Ch. P-485	Ch. P-486	Ch. P-485	Ch. P-486
	544	544	544	544
	- 540.42056	- 544.91767	543.93195	545.6846
Delta = Per Unit (in psig)	3.57944	- 0.91767	0.06805	- 1.6846

Observation of the four channels shows that the P-485 channel for unit 1 is some what lower than the other three channels but at the same time the other three channels are not differing by a large delta. This difference could potentially be explained by considering the normal transmitter accuracy of +/- 0.5 % Span (650 psig) or +/- 3.25 psi. Examination of 2007 post outage data for the Unit 1 P-485 channel shows that the full power pressure is now in line (approximately 544 psig) with the other channels due to instrument calibration.

ATTACHMENT C

6/7/07

Turbine First Stage Pressure at Full Power

In conclusion it is recommended that a turbine first stage pressure for full power operation be established at 544 psig with a process measurement error of +/- 2 psig.

Robert J Kowalk

6-7-07

ATTACHMENT D

Setpoint for Turbine Impulse Pressure Input to P-7

The original setpoint for the turbine impulse pressure input to the P-7 permissive was specified in WCAP-7116, "PBNP Precautions, Limitations and Setpoints for Nuclear Steam Supply Systems" (Reference G.8), along with other Reactor Protection System (RPS) and Engineered Safety Features Actuation System (ESFAS) setpoint values. This document states that the setpoint for this function is 10% of the full-load turbine impulse pressure.

At around the same time, limiting RPS and ESFAS values were placed in the PBNP Tech Specs. These were limiting values for the setpoints—that is, the "field setting" or "field trip setpoint" could be any value up to and including this limiting value. Putting these limiting values in the Tech Specs satisfies the requirement of 10 CFR 50.36 that limiting safety system settings for variables having significant safety functions be placed in the plant Technical Specifications.

At the time of the original PBNP design and licensing, the relationship between analytical limits, limiting safety system settings, allowable values, limiting trip setpoints, and field trip setpoints was understood somewhat differently than it is today. In fact, not all of these concepts had been clearly formulated at that time.

In some cases, the setpoint value specified in the PLS (Reference G.8) was more conservative than the limiting value in the Tech Specs. However, in other cases, such as the turbine impulse pressure setpoint used as an input to permissive P-7, there was no difference between the setpoint value specified in the PLS and the limiting value in the Tech Specs. Because, in such a situation, the field trip setpoint was the same as the Tech Spec limit, any slight change in the setpoint value over the operational cycle—for example, due to instrument drift—would, if the trip setpoint were found outside the Tech Spec limit when the channel was tested, cause a Tech Spec violation. As a result, the field trip setpoint was moved away from the Tech Spec limiting value by some small amount that was considered adequate to prevent this problem. At a later date, if the results of the channel test were still too close to the Tech Spec limit, the field setpoint could be moved again.

The originally specified setpoint for the turbine impulse pressure setpoint used as an input to permissive P-7 was 10% of full load turbine impulse pressure (Reference G.8). At some point, this setpoint was lowered to 9.5% (Reference G.12, Rev. 0). The setpoint was then lowered again—to 9.0% (Reference G.12, Rev. 1). Finally, the setpoint was lowered to 8% to allow for the increased drift associated with a longer time between calibrations (Reference G.12, Rev. 4).

During the conversion of the PBNP custom Technical Specifications (CTS) to the "improved" Technical Specifications (ITS), which were based on the Westinghouse Owners Group (WOG) Standard Technical Specifications (STS), the values that had appeared in the CTS were declared to be "Allowable Values" (Reference G.11). Since, in many cases, the field setpoint had been established by backing off from the Tech Spec value to account for changes (e.g., drift) over the course of the operating cycle, the CTS values could be considered, in some sense, equivalent to Allowable Values.

However, there was no calculation that established the relationship of the CTS Tech Spec value to the value of the field setpoint—rather, for the reasons described above, this relationship was somewhat arbitrary. As a result, the Allowable Values in the ITS were taken directly from the values which had been in the CTS and which, in turn, had originally been considered to be limiting values for the field

ATTACHMENT D

trip setpoint. In the case of the turbine impulse pressure setpoint used as an input to permissive P-7, the limiting value of 10% that had appeared in the CTS became the ITS Allowable Value. The field trip setpoint remained at 8%.

As described above, the originally specified field setpoint for this function was 10% of full load turbine impulse pressure. This is the typical nominal trip setpoint value established by Westinghouse for this function. However, at PBNP, over time, this value was converted into an Allowable Value and the field setpoint was lowered to 8%. The WOG STS (References G.13 and G.9), on which the PBNP ITS are based, lists a typical nominal trip setpoint value of 10% for this function and a higher value (12.2%) for a typical Allowable Value. It is evident that the approach used in the WOG STS for this function is to first establish a nominal trip setpoint and then calculate an Allowable Value based on the nominal trip setpoint for that function.

Therefore, in line with the approach outlined in the above paragraphs, the following setpoint value is used in this calculation for the turbine impulse pressure input to P-7: a nominal field trip setpoint of 10% of full load turbine impulse pressure, which is based on the originally recommended (PLS) setpoint of 10% of full load turbine impulse pressure.

ENCLOSURE 4

NEXTERA ENERGY POINT BEACH, LLC
POINT BEACH NUCLEAR PLANT, UNITS 1 AND 2

LICENSE AMENDMENT REQUEST 261
EXTENDED POWER UPRATE
RESPONSE TO REQUEST FOR ADDITIONAL INFORMATION

CONTAINMENT PRESSURE LOW RANGE CALCULATION

99 pages follow

1.0 BACKGROUND, PURPOSE, AND SCOPE OF CALCULATION

1.1 Background

This section is not affected by this minor revision.

1.2 Purpose of this Minor Revision

The purpose of this minor revision is to remove the parametric values for Containment Pressure Low Range and incorporate the instrument uncertainty into the Tech Spec values. This calculation provides the technical basis for a Tech Spec value that includes instrument uncertainty and thereby eliminates the need for a parametric value to meet Tech Spec surveillance requirements.

1.3 Scope

The scope of this minor revision is to evaluate the Containment Pressure Low Range indicator instrument uncertainty used to satisfy the Tech Specs Surveillance Requirement (SR) 3.6.4.1, and recommend a new Tech Spec value that includes the instrument uncertainty. This minor revision will revise sections of PBNP-IC-17 that are impacted by this change. All associated documents and values that are impacted by this minor revision have been listed and marked-up to reflect this change. The changes impacted by this revision are shown on the revised page attached and are shown with a revision bar.

1.4 Applicability

This minor revision is valid upon approval of License Amendment Request 262 by the NRC.

2.0 ACCEPTANCE CRITERIA

This section is not affected by this minor revision.

3.0 ABBREVIATIONS

This section is not affected by this minor revision.

4.0 REFERENCES

This section is not affected by this minor revision.

5.0 ASSUMPTIONS

This section is not affected by this minor revision.

6.0 DESIGN INPUTS

6.4 Environmental Conditions

The Low Range Containment Pressure channels P-945, P-947 and P-949, shown in block diagram form in Figure 6.2-1, provide input to the Engineered Safety

Features Actuation System (ESFAS) and indication in the control room and at the PPCS.

The Control Room Indication and PPCS display are used to monitor Low Range Containment Pressure. Routine surveillance of instrumentation (in the Control Room) to determine Tech Spec Compliance for a specific process is performed during normal plant operating conditions only.

The Control Room Indication to monitor Low Range Containment Pressure also provides input for EOP operator actions. References G.32 and G.38 classify Low Range Containment Pressure as a Regulatory Guide 1.97, Type A, B and C variable. FSAR Table 7.6-1 (Ref. G.24) and the Q Basis codes 7 and 21 in Passport (Ref. G.38) identify the instrumentation as a Category 1 variable (Note: PBNP is in the process of adding Reg. Guide 1.97 Category values into Passport). Q Basis codes 7 and 21 are defined in Fleet Procedure FP-E-RTC-02 (Ref. P.20).

Tech Spec Table 3.3.2-1 (Ref. G.14) indicates that Low Range Containment Pressure channels P-945, P-947 and P-949 provide input to ESFAS by initiating a Safety Injection (SI) Signal on High Containment Pressure and Containment Spray Actuation Signal on High-High Containment Pressure to mitigate a LOCA/HELB event. The Low Range Containment Pressure channels also initiate a Condensate Isolation Signal on High Containment Pressure. The condensate isolation function serves as a backup protection function in the event of a Main Steam Line Break inside the containment with the failure of the Main Feedwater to isolate. Initiation of SI signal, Containment Spray Actuation Signal and Condensate Isolation Signal are safety-related functions.

6.4.1 Auxiliary building

Per References D.5 through D.10 and G.33, the Low Range Containment Pressure transmitters are located in the non-harsh area of the Auxiliary Building at the following locations:

Table 6.4-1 - Transmitter Locations

Transmitters	Location	Room Area
1PT-945	N-10, El. 26'-0"	Pipeway #2
1PT-947	M-10, El. 8'-0"	Pipeway #2
1PT-949	J-8, El. 8'-0"	Pipeway #1
2PT-945	N-13, El. 26'-0"	Pipeway #3
2PT-947	M-13, El. 8'-0"	Pipeway #3
2PT-949	J-15, El. 8'-0"	Pipeway #4

The design temperatures for the Auxiliary Building HVAC system per Ref. G.23 are 65°F during winter and 85°F during summer. The HVAC unit keeps the minimum normal temperature above 65°F during the outage. In accordance with Section 3.3.4.7 of Reference G. 1, the minimum calibration temperature may conservatively be used and therefore 65°F is to be used as the calibration temperature in this calculation.

FSAR Section 9.5 (Ref. G.24) states that the Auxiliary Building HVAC is nonsafety related. From Table 6-1 of Reference G.22, the Auxiliary Building

maximum temperature for normal conditions is 104°F. For a non-safety related HVAC system, the maximum temperature is 120°F due to a loss of the HVAC Cooling Unit (Ref. G.22, Table 6-1). Since Tech Spec compliance surveillance on control room and PPCS indicators is only performed during normal plant operating conditions, 104°F is used as the maximum temperature. The trip functions (SI, Condensate Isolation and Containment Spray) will also use 104°F as the maximum temperature. These trips are shown to happen a short duration after the accident that they are required for (Ref G.24), and the HVAC system can be assumed to be functioning prior to the event (assumption 5.1.13). Previous revisions of this calculation have used 120°F as the maximum temperature. However, based on the assumed availability of the HVAC system, the trips occurring quickly during a LOCA or MSLB, and the max design temperature of 85°F (Ref G.23) of the PAB; using 104°F as the maximum temperature is considered conservative. For EOP (Regulatory Guide 1.97 Category 1 variables), 120°F is used as the maximum temperature since the instrumentation is expected to operate under compromised environmental conditions caused by a loss of the HVAC Cooling Unit.

Per Reference C.5, a new HELB barrier was installed per MR 99-003 (Ref. G.34) to confine postulated HELB to the CCW HX/BAT room and thereby prevent the steam from entering other areas of the Auxiliary Building. Hence, these areas do not experience environmental effects from postulated HELB. The areas where the transmitters are located are not in the CCW HX/BAT room, and therefore, do not experience the elevated temperature effects from the postulated accidents (LOCA or HELB). However, the highest radiation at the transmitter locations due to recirculation of coolant during a LOCA is 7.82×10^5 RADs (Ref. C.7). The elevated radiation effects are not applicable to the Containment High-High Pressure Containment Spray, Containment High Pressure Safety Injection, and Condensate Isolation trip setpoint, since the initiation of the trips are assumed to occur before containment sump recirculation is started (Assumptions 5.1.11 and 5.1.12).

The Auxiliary Building normal humidity of 70% and radiation of 400 RADs (40-year dose) is documented in Reference G.22.

Table 6.4-2 - Auxiliary Building Ambient Temperature Conditions

Function	**Calibration Temp. (°F)**	**Maximum Temp. (°F)**	**Humidity (%)**	**Radiation (Rads)**
Normal (For Tech Spec values)	65	104	70	400 (40-year dose)
Normal (For EOP Input)	65	120	70	400 (40-year dose)
Accident (For EOP Input)	65	120	70	7.82×10^5 Rads
Accident (For SI and Condensate Isolation Trips)	65	104	70	400 (40-year dose)

Accident (For Containment Spray Trip)	65	104	70	400 (40-year dose)

6.4.2 Control Room and Computer Room

The rack components and control board indicators are located in the Control Room (Ref. P. 1 and P.2). The Control Room HVAC System controls the temperature of the Control Room and the Computer Room at 75° per Reference G.23. Per FSAR Section 9.8.1 (Ref. G.24), the temperature can vary by 10°F, resulting in a normal temperature range of 65°F to 85°F. This temperature variation is supported by the fact that the Johnson Controls T-4002-202 thermostat (Ref. D. 11) in the Control Room is capable of controlling the room temperature (Ref.V.7) within these bounds. In accordance with Section 3.3.4.7 of Reference G.1, the minimum calibration temperature may conservatively be used and therefore the minimum temperature of 65°F is used as the calibration temperature for the components in the Control Room and Computer Room.

Since Tech Spec compliance surveillance of Control Room Indicators and PPCS displays is only performed during normal plant operating conditions, 85°F is used as the maximum temperature for this function (Note: the maximum temperature limit for the PPCS is 95°F per Assumption 5.1.10). Per Assumption 5.1.9, the maximum expected temperature is 120°F. This maximum temperature of 120°F will be used and is justified by the intended functions of the Low Range Containment Pressure loops (safety-related and Regulatory Guide 1.97 Category 1 variable). These functions necessitate the instrumentation to operate under compromised environmental conditions caused by a loss of the WAC Cooling Unit. The Control Room humidity of 50% and 95% (loss of chiller) is documented in Reference G.22. Section 1 1.6.2 (fifth paragraph) of FSAR (Ref. G.24) states that the control room is in Zone I and Table 11.6-1 states the maximum dose rate in Zone I is 1.0 mrem/hr.

Table 6.4-3 - Control Room and Computer Room Ambient Environmental Conditions

Function	Calibration Temp. (°F)	Maximum Temp. (°F)	Humidity (%)	Radiation
For Tech Spec Values	65	85	50	1 mrem/hr
For Trips and EOP Input	65	120	95	1 mrem/hr

6.5 Existing Analytical Limit (AL), Tech Spec Allowable Value (AV), and Field Trip Setpoint (FTSP)

This section is not affected by this minor revision.

6.6 Technical Surveillance Requirement

The existing Technical Specification LCO 3.6.4 (Ref. G.14) requires operators to verify that containment pressure is 0 ± 2 psig. Sections 8.4.3 and 8.4.4 of this calculation provide the technical basis for requiring operators to verify that indicated containment pressure is 0±1 psig and PPCS containment pressure is 0 ± 1.3 psig.

7.0 METHODOLOGY

7.1 Uncertainty Determination

This section is not affected by this minor revision.

7.1.1 Sources of Uncertainty

Change the last bulleted paragraph in Section 7.1.1 to read:

The PPCS display and Control Room Indication are associated with the TS values per References G.30 and G.31, and are classified as a Category B function. Therefore, the total loop error should be expressed as a 75/75 value.

7.1.9 Technical Specification Values

The Tech Spec (TS) values are operating limits that include instrument uncertainty. The TS values are calculated as follows:

TS Values = (Process Limits – $TLE_{IND\text{-}NRM}$) (Eq. 7.1.9-1)

Where:

$TLE_{IND\text{-}NRM}$ = The 75/75 value of the Total Loop Error for the indicator loop and/or PPCS loop as required in the Operator Daily Logsheet

8.0 BODY OF CALCULATION

8.4 Total Loop Errors

8.4.3 Total Normal Indicator Loop Error ($TLE_{IND\text{-}NORM}$)

As stated in Section 6.4 of this calculation , Low range Containment Pressure control room indication is associated with a TS process limit, classified as a Category B function, and is combined into a 75/75 total loop error. Applicable uncertainties are listed in Section 8.2 and summarized in Section 8.3.

Per Section 6.4, routine surveillance of the indicator loop associated with a Tech Spec process limit is performed only during normal operating conditions. Using Equation 7.1.2-2a, the Total Normal Indicator Loop Error ($TLE_{IND\text{-}NORM}$) is determined as follows:

$$TLE_{IND\text{-}NORM} = \pm \sqrt{\begin{array}{l} Sa^2 + I/Ia^2 + Ia^2 + Sd^2 + I/Id^2 + Id^2 \\ + Sm^2 + I/Im^2 + Im^2 + Sv^2 + I/Iv^2 + Iv^2 \\ + Sp^2 + I/Ip^2 + Ip^2 + ISt_{n1}{}^2 + SI/It^2 + It^2 \\ + Sh_n{}^2 + I/Ih^2 + Ih^2 + Sr_n{}^2 + I/Ir^2 + Ir^2 \\ + Ss_n{}^2 + I/Is^2 + Is^2 + Sspe_n{}^2 + Sope_n{}^2 + Irea^2 \end{array}} \pm PE_n \pm Bias$$

Substituting for the Total Normal indicator Loop Error ($TLE_{IND\text{-}NORM}$):

$$TLE_{IND\text{-}NORM} = \pm \sqrt{\begin{array}{l} 0^2 + 0.500^2 + 0^2 + 0.518^2 + 0.500^2 + 1.028^2 \\ + 0^2 + 0.095^2 + 0^2 + 0.500^2 + 0.250^2 + 1.750^2 \\ + 0^2 + 1.000^2 + 0^2 + 1.090^2 + 0^2 + 0^2 \\ + 0^2 + 0^2 + 0^2 + 0^2 + 0^2 + 0^2 \\ + 0^2 + 0^2 + 0^2 + 0^2 + 0^2 + 0^2 \end{array}} + 0 + 0$$

$TLE_{IND\text{-}NORM} = \pm 2.720\%$ span

Per Section 3.3.3.13 of Reference G.1, the total Normal Indicator Loop Error ($TLE_{IND\text{-}NORM}$) is converted from 95/95 to 75/75 statistics as follows:

$TLE_{IND\text{-}NORM} = \pm 2.720$ % span * (1.15/1.96)

$TLE_{IND\text{-}NORM} = \pm 1.596$ % span

Per Reference P.1 and P.2, the calibrated span in engineering units is 60 psi. Converting the 75/75 Total Normal Indicator Loop ($TLE_{IND\text{-}NORM}$) to process units gives,

$TLE_{IND\text{-}NORM} = \pm (1.596$ % span) * (60 psi)/100 %

$TLE_{IND\text{-}NORM} = \pm 0.958$ psi (75/75)

Per Reference G.36, the Control Room indication for the Low range Containment Pressure (PI-945, PI-947 and PI-949) has a minor division of 1 psi. Per Section 7.1, the $TLE_{IND\text{-}NORM}$ value should be rounded to the precision that is readable on the associated loop indicator. Per Section 3.3.5.3 of Reference G.1, the readability of there indicators is ± ½ the smallest division (or 0.5 psig).

Therefore, the $TLE_{IND\text{-}NORM}$ value is conservatively rounded up to the nearest 0.5 psig interval.

$TLE_{IND\text{-}NORM} = \pm 1.00$ psi (75/75)

The TS values are determined using Eq. 7.1.9-1. The current TS limits without instrument uncertainty per section 6.6 are 0 ± 2 psig. The new TS values with instrument uncertainty are as follows:

TS values = ± (2.0 psig – 1.0 psig) = ±1.0 psig

Low Range Containment Pressure Tech Spec Limits (Control board Indicators PI-945, PI-947 and PI-949) are:

Low Range Containment Pressure = 0 ± 1 psig (75/75)

8.4.4 Total PPCS Loop Error (TLE_{PPCS})

As stated in Section 7.1.1 of this calculation, Low range Containment Pressure PPCS indication is classified as a Category B function and is combined into a 75/75 total loop error. Applicable uncertainties are listed in Section 8.2 and summarized in Section 8.3.

Using Equation 7.1.2-3, the Total PPCS Loop Error is determined as follows:

$$TLE_{PPCS} = \pm \sqrt{\begin{array}{l} Sa^2 + I/Ia^2 + PPCSa^2 + Sd^2 + I/Id^2 + PPCSd^2 \\ + Sm^2 + I/Im^2 + PPCSm^2 + Sv^2 + I/Iv^2 + PPCSv^2 \\ + Sp^2 + I/Ip^2 + PPCSp^2 + ISt_{n1}{}^2 + SI/It^2 + PPCSt^2 \\ + Sh_n{}^2 + I/Ih^2 + PPCSh^2 + Sr_n{}^2 + I/Ir^2 + PPCSr^2 \\ + Ss_n{}^2 + I/Is^2 + PPCSs^2 + Sspe_n{}^2 + Sope_n{}^2 + PPCSrea^2 \end{array}} \pm PE_n \pm Bias$$

Substituting for normal Total PPCS Loop Error (TLE_{PPCS}):

$$TLE_{PPCS} = \pm \sqrt{\begin{array}{l} 0^2 + 0.500^2 + 0.510^2 + .0518^2 + 0.500^2 + 0^2 \\ + 0^2 + 0.095^2 + 0.075^2 + 0.500^2 + 0.250^2 + 0.500^2 \\ + 0^2 + 1.000^2 + 0^2 + 1.090^2 + 0^2 + 0^2 \\ + 0^2 + 0^2 + 0^2 + 0^2 + 0^2 + 0^2 \\ + 0^2 + 0^2 + 0^2 + 0^2 + 0^2 + 0.017^2 \end{array}} \pm PE_n \pm Bias$$

TLE_{PPCS} = ± 1.948 % span (95/95)

Per Section 3.3.3.13 of Reference G.1, the Total PPCS Loop Error (TLE_{PPCS}) is converted from 95/95 to 75/75 statistics as follows:

TLE_{PPCS} = ± 1.948 % span * (1.15/1.96)

TLE_{PPCS} = ± 1.143 % span (75/75)

Per Reference P.1 and P.2, the calibrated span in engineering units is 60 psi. Converting the 75/75 Total PPCS Loop Error (TLE_{PPCS}) to process units and rounding to the calibration procedure precision.

TLE_{PPCS} = ± (1.143 % span) * (60 psi)/100 %

TLE_{PPCS} = ± 0.7 psi (75/75)

The TS values are determined using Eq. 7.1.9-1. The current TS limits without instrument uncertainty per section 6.6 are 0 ± 2.0 psig. Tthe new Tech Specs with instrument uncertainty are as follows:

TS values = ± (2.0 psig – 0.7 psig) = ±1.3 psig

Low Range Containment Pressure Technical Specification Limits (PPCS P-945, P-947 and P-949) are :

Low Range Containment Pressure = 0 ± 1.3 psig (75/75)

9.0 RESULTS AND CONCLUSIONS, WITH LIMITATIONS

9.4 Technical Specification Surveillance

The indicator and PPCS loop are associated with Tech Spec Surveillance compliance. The Normal loop uncertainties are summarized below:

Table 9.4-1 Normal Loop Uncertainties

	Indicator loop Uncertainties		PPCS Loop Uncertainties		Reference
75/75 Confidence	±1.596% span	±1.00 psi	±1.143% span	±0.7 psi	Section 8.4.3 Section 8.4.4

From Section 6.6, the Tech Spec Limits are ≥ -2.0 psig and ≤ + 2.0 psig. The Tech Spec limits that include loop uncertainties (rounded to the indicator and PPCS readability) are:

Low Range Containment Pressure limits (Control Board Indicators, PI-945, PI-947 and PI-949):

Low Range Containment Pressure (Indicated) = 0 ± 1 psig **(Section 8.4.3)**

Low Range Containment Pressure limits (PPCS display, P-945, P-947 and P-949):

Low Range Containment Pressure (PPCS) = 0 ± 1.3 psig **(Section 8.4.4)**

10.0 IMPACT ON PLANT DOCUMENTS

PBNP-IC-17-003-A is tracked under EC 13891. Impacted document changes not explicitly showing a PCR are being tracked under GAR 01150916.

10.1 Point Beach Nuclear Plant Technical Specifications Bases 3.6.4, Amendment 201 (Unit 1), 206 (Unit 2)

The basis for Surveillance Requirement 3.6.4.1 should be changed to reflect the new Tech Spec with indicator uncertainty. This change is being tracked under License Amendment Request 262.

10.2 Point Beach Nuclear Plant Technical Specifications 3.6.4, Amendment 217 (Unit 1), 222 (Unit 2)

This is the Tech Spec for the Containment Pressure Low Range. Surveillance Requirement 3.6.4.1 should be changed to reflect the new Tech Spec with indicator uncertainty. This change is being tracked under License Amendment Request 262.

10.3 OM 1.1, Conduct of Plant Operations Rev 29, Point Beach Specific

OM 1.1 contains the current Tech Spec and parametric values for Containment Pressure Low Range. OM 1.1 should be revised to remove the portion indicating the different Tech Spec and Parametric Value. PCR 01149789 will track the generated change to this document.

10.4 PBF-2034 Rev. 75, Control Room Log – U1

The operator logs covering Containment Pressure Low Range reference Parametric Values for these plant parameters. These references should be removed as the Tech Specs (See Sec. 10.1). PCR 01149790 will track the generated change to this document.

10.5 PBF-2035 Rev. 75, Control Room Log – U2

The operator logs covering Containment Pressure Low Range reference Parametric Values for these plant parameters. These references should be removed as the Tech Specs (See Sec. 10.1). PCR 01149791 will track the generated change to this document.

10.6 ARP 1-PPCS-018 Rev. 2, Priority Alarm Containment Pressure Unit 1

PPCS alarm setpoints should be revised in accordance with the new recommended TS values.

10.7 ARP 2-PPCS-018 Rev. 2, Priority Alarm Containment Pressure Unit 2

PPCS alarm setpoints should be revised in accordance with the new recommended TS values.

10.8 TS 32 Miscellaneous Equipment Checks (Monthly) Unit 1, Rev. 17

The containment channel check tolerance should be revised in accordance with the new recommended TS values.

10.9 TS 32 Miscellaneous Equipment Checks (Monthly) Unit 2, Rev. 17

The containment channel check tolerance should be revised in accordance with the new recommended TS values.

10.10 DBD-11 Safety Injection and Containment Spray System, Rev. 11

Item 8.158 in DBD-11 references calculation 2001-0032 and Parametric Values. This reference should be removed and PBNP-IC-17 added as the referenced document for containment pressure.

10.11 DBD-24 ESF (Safeguards) Actuation System, Rev. 5

Table 2-2 references TS values that are revised by this calculation and should be revised to reflect the new TS values.

10.12 DBD-30 Containment Heating and Ventilation Systems, Rev. 11

Sections 2.2.3 and 5.1.1 reference TS values being revised by this calculation and should be revised to reflect the new TS values.

10.13 PBF-2061 Control Room Shift Turnover Checklist Unit 1, Rev. 31

PPCS pressure ranges are affected by this calc, and should be revised to reflect the new TS values.

10.14 PBF-2062 Control Room Shift Turnover Checklist Unit 1, Rev. 35

PPCS pressure ranges are affected by this calc, and should be revised to reflect the new TS values.

10.15 OP 9C, Containment Venting and Purging Unit 1, Rev. 3

OP 9C references Parametric Values in OM 1.1 which are being removed. This reference should be changed to reference the Tech Specs.

10.16 OP 9C, Containment Venting and Purging Unit 2, Rev. 3

OP 9C references Parametric Values in OM 1.1 which are being removed. This reference should be changed to reference the Tech Specs.

11.0 50.59/72.48 REVIEW

The activity of revising this calculation is in support of license amendment request (LAR) 262. This LAR will incorporate instrument uncertainty into Technical Specification values that have been identified to not currently account for uncertainty.

The conclusions of this minor revision have determined a value that is more conservative than the current Technical Specification, however under the provisions of 10 CFR 50.59, any activity that requires a change to the Technical Specifications requires prior NRC approval to implement. And as such, the new recommended Technical Specification determined by this calculation cannot be implemented until approval of LAR 262 is received from the NRC.

Upon LAR 262 approval, per FP-E-SE-03, a 10 CFR 50.59 screening/evaluation will not need to be performed for the implementing documents as long as the change is covered in full by the approved license amendment. These changes would be covered by pre-screening criterion 5; "the NRC reviewed and approved the activity in its entirety as proposed at PBNP."

Table of Contents

1.0 BACKGROUND, PURPOSE, AND SCOPE OF CALCULATION 11
1.1 Background 11
1.2 Purpose 11
1.3 Purpose of This Revision 11
1.4 Scope 11
1.5 Instrumentation Evaluated 12
1.6 Superseded Station Calculations 12
2.0 ACCEPTANCE CRITERIA 14
3.0 ABBREVIATIONS 14
4.0 REFERENCES 15
4.1 General 15
4.2 Drawings 17
4.3 Procedures 18
4.4 Vendor 19
4.5 Calculations 20
5.0 ASSUMPTIONS 21
5.1 Validated Assumptions 21
5.2 Unvalidated Assumptions 24
6.0 DESIGN INPUTS 25
6.1 Loop Definitions 25
6.2 Loop Block Diagram 25
6.3 Component Models and Tag Numbers 25
6.4 Environmental Considerations 26
6.5 Existing Analytical Limit (AL), Tech Spec Allowable Value (AV) and Field Trip Setpoint (FTSP) 29
6.6 Technical Surveillance Requirement 30
7.0 METHODOLOGY 31
7.1 Uncertainty Determination 31
7.2 Drift Considerations 42
8.0 BODY OF CALCULATION 43

8.1 Determination of Process Error (PE) 43
8.2 Device Uncertainty Analysis 43
8.3 Device Uncertainty Summary 57
8.4 Total Loop Errors 60
8.5 Acceptable As-Left and As-Found Calibration Tolerances 65
8.6 Setpoint Evaluations 71
8.7 Operability Limit Evaluations 73
8.8 Channel Check Tolerances 74
8.9 Scaling 76
9.0 RESULTS AND CONCLUSIONS, WITH LIMITATIONS 80
9.1 Analytical Limits (AL) 80
9.2 Operability Limits (OL) 80
9.3 Limiting Trip Setpoints (LTSP) and Field Trip Setpoints (FTSP) 81
9.4 Tech Spec Surveillance 81
9.5 EOP Inputs 82
9.6 Channel Check Tolerance 82
9.7 Acceptable As-Left and As-Found Tolerances 82
9.8 Scaling 83
9.9 Limitations 84
9.10 Graphical Representation of Setpoint Parameters 85
10.0 IMPACT ON PLANT DOCUMENTS 86
11.0 ATTACHMENT LIST 89
12.0 10.CFR 50.59/72.48 REVIEW 89

1.0 BACKGROUND, PURPOSE, AND SCOPE OF CALCULATION

1.1 Background

The Low Range Containment Pressure Channels, P-945, P-947, and P-949, provide input to the engineered safety features actuation system (ESFAS) and indication to the control room operators.

The Low Range Containment Pressure Channels utilize a two-out-of-three coincidence circuit to provide input for three separate ESFAS functions: (1) actuation of safety injection, (2) actuation of condensate isolation, and (3) actuation of containment spray (Note: the containment spray signal is initiated by a 2-out-of-3 logic of the High-High Low Range Containment Pressure signal and a 2-out-of-3 logic of the High-High Intermediate Range Containment Pressure signal). The values of containment pressure at which these actuations occur are controlled as ESFAS setpoints.

Low Range Containment Pressure indication is used by the operators to verify that containment pressure is within the values allowed by the Technical Specifications LCO 3.6.4 (Reference G.14). It is also used to ensure specific safety functions are accomplished in the emergency operating procedures (EOPs). The particular values of containment pressure that appear in the EOPs are controlled as EOP setpoints.

1.2 Purpose

The purpose of this calculation is to determine the instrument and loop uncertainties, Limiting Trip Setpoints, Operability Limits, As-Found Tolerance and As-Left Tolerance associated with the Low Range Containment Pressure ESFAS functions and control room indication. In WEP-SPT-29, "Containment Parameter EOP Setpoints", the indication uncertainties are used to calculate specific EOP setpoints.

1.3 Purpose of this Revision

The purpose of this revision is to determine Operability Limits (OL) and to re-evaluate the Limiting Trip Setpoint (LTSP) associated with the Low Range Containment Pressure ESFAS functions. This revision will also include elevated radiation effects under accident conditions for the indication uncertainties used to calculate the EOP setpoints. The Operability Limits will be as-found limits for each function during Channel Operational Testing (COT), beyond which the function will be considered inoperable. The OL values may also be incorporated into licensing documents (e.g., the TRM) and the calibration procedures for the purpose of determining operability within the plant Technical Specifications. The LTSP will be re-evaluated based on temperature and radiation effects that are less (i.e. closer to actual plant conditions) than those used in the previous revision. The transmitters used for EOP indication are located in an area of the auxiliary building that will receive a large radiation dose during the recirculation phase of a LOCA. These transmitters are part of the loop required for some EOP actions, and therefore need to include this uncertainty in the total loop error calculation.

1.4 Scope

The scope of this calculation is listed below:

- Determine uncertainties associated with the Indication Loop under normal and accident environmental conditions. These uncertainties are then used in the EOP (WEP-SPT-29, "Containment Parameter EOP Setpoints") setpoint evaluations.
- Determine the Limiting Trip Setpoint (LTSP) and Operability Limits (OL) for High Containment Pressure – Safety Injection actuation setpoint, the High-High Containment Pressure – Containment Spray actuation setpoint, and the High Containment Pressure-Condensate Isolation actuation setpoint.
- Evaluate the existing Field Trip Setpoints (FTSP) for High Containment Pressure – Safety Injection actuation, High-High Containment Pressure – Containment Spray actuation, and High Containment Pressure – Condensate Isolation actuation.
- Determine Acceptable As-Found/As-Left Calibration Tolerances for applicable devices.
- Determine Channel Check Tolerance.
- Develop a scaling calculation for the High Containment Pressure – Safety Injection actuation, High-High Containment Pressure – Containment Spray actuation, and High Containment Pressure – Condensate Isolation actuation setpoints and Operability Limits.
- Determine indication and PPCS loop uncertainties used to determine compliance with the station's parametric value for Low Range Containment Pressure.
- Determine the Containment Pressure Parametric Values to be used for Tech Spec surveillance.

1.5 Instrumentation Evaluated

This calculation evaluates the plant equipment (for Units 1 and 2) listed in the table below. See Sections 6.2 and 6.3 of this calculation for instrument specifications, parameters, and loop configurations.

Table 1.5-1 Instrumentation List

Pressure Transmitters	Power Supplies	Bistables	Current-to-Current Repeaters	Indicators	PPCS
1(2)PT-945	1(2)PQ-945	1(2)PC-945A/B	1(2)PM-945	1(2)PI-945	1(2)P-945
1(2)PT-947	1(2)PQ-947	1(2)PC-947A/B	1(2)PM-947	1(2)PI-947	1(2)P-947
1(2)PT-949	1(2)PQ-949	1(2)PC-949A/B	1(2)PM-949	1(2)PI-949	1(2)P-949

1.6 Superseded Station Calculations

The following existing calculation(s) will be superseded upon issuance of Revision 3 of PBNP-IC-17:

- PBNP-IC-17– Low Range Containment Pressure Instrument Loop Uncertainty/Setpoint Calculation, Revision 2.
- PBNP-IC-17– Low Range Containment ressure Instrument Loop Uncertainty/Setpoint Calculation, Revision 2A.
- PBNP-IC-17– Low Range Containment ressure Instrument Loop Uncertainty/Setpoint Calculation, Revision 2B.
- EE 2001-0032, Rev. 6, "Parametric Values" – only the portions that apply to Low Range Containment Pressure.

2.0 ACCEPTANCE CRITERIA

The Tech Spec OL and FTSP are acceptable if the following criteria are met:

- The LTSP is established to ensure that the instrument channel trip occurs before the AL is reached. The LTSP is compared to the FTSP to ensure that the FTSP is less than or equal to the LTSP (for increasing setpoint) or the FTSP is greater than or equal to the LTSP (for decreasing setpoint).
- The Operability Limits for primary trips are intended to be more conservative than the corresponding Limiting Trip Setpoint, i.e. closer to the FTSP than the LTSP. The OL establishes whether the trip bistable portion of the channel is performing acceptably during the channel operational test. This will allow the Technical Specification tables for RPS and ESFAS trip functions to be revised to insert the LTSPs as new Allowable Values for the primary trip functions. Backup trip functions and permissives do not have a LTSP and therefore are not considered to require an Allowable Value in the TS. However, all trip functions will have operability limits.
- Channel Check Tolerance (CCT) is the maximum expected deviation between channel indications when performing a qualitative assessment of channel behavior during operation. The calculated CCT is compared to the existing CCT to ensure that the existing CCT is less than or equal to the calculated CCT.

3.0 ABBREVIATIONS

3.1	AL	Analytical Limit
3.2	AV	Allowable Value
3.3	BAF	Bistable As-Found Tolerance
3.4	BAL	Bistable As-Left Tolerance
3.5	DBE	Design Basis Event
3.6	EOP	Emergency Operating Procedure
3.7	ESF	Engineered Safety Features
3.8	FSAR	Final Safety Analysis Report
3.9	FTSP	Field Trip Setpoint
3.10	HELB	High Energy Line Break
3.11	IAF	Indicator As-Found Tolerance
3.12	IAL	Indicator As-Left Tolerance
3.13	I/I	Current-to-Current Converter
3.14	I/IAF	Current-to-Current Converter As-Found Tolerance
3.15	I/IAL	Current-to-Current Converter As-Left Tolerance
3.16	IND	Indicator
3.17	LOCA	Loss of Coolant Accident
3.18	LTSP	Limiting Trip Setpoint
3.19	M&TE	Measurement and Test Equipment
3.20	MSLB	Main Steam Line Break
3.21	OL	Operability Limit
3.22	PBNP	Point Beach Nuclear Plant
3.23	PE	Process Error
3.24	PPCS	Plant Process Computer System
3.25	PPCSAF	Plant Process Computer System As-Found Tolerance
3.26	PPCSAL	Plant Process Computer System As-Left Tolerance

3.27	PS	Process Span (engineering unit)
3.28	RAD	Radiation Absorbed Dose
3.29	RE	Rack Error
3.30	SAF	Sensor Acceptable As-Found
3.31	SAL	Sensor Acceptable As-Left
3.32	SLB	Steam Line Break
3.33	SI	Safety Injection
3.34	SR	Surveillance Requirements
3.35	SRSS	Square Root of the Sum of the Squares
3.36	Tech Spec	Technical Specifications
3.37	TLE	Total Loop Error
3.38	XMTR	Transmitter

4.0 REFERENCES

The revisions and/or dates of the References per this section are current as of 10/26/2006.

4.1 General

G.1 Point Beach Nuclear Plant Design Guideline DG-I01, Instrument Setpoint Methodology, Rev. 4

G.2 Deleted per Rev. 2 of this calculation.

G.3 Deleted per Rev. 2 of this calculation.

G.4 Deleted per Rev. 2 of this calculation.

G.5 Deleted per Rev. 2 of this calculation.

G.6 Deleted per Rev. 2 of this calculation.

G.7 Deleted per Rev. 2 of this calculation.

G.8 PBNP Condition Report A/R 141685 (CR 95-109) Evaluation, dated February 22, 1995

G.9 Deleted per Rev. 2 of this calculation.

G.10 Deleted per Rev. 2 of this calculation

G.11 Deleted per Rev. 2 of this calculation

G.12 Deleted per Rev. 2 of this calculation.

G.13 Deleted per Rev. 2 of this calculation.

G.14 Point Beach Nuclear Plant Technical Specifications, Section 3.3.2, Table 3.3.2-1, Items #1 and #2, dated November 2001; and Section 3.6.4, dated December 2002. Technical Specification Bases B 3.6.4, dated January 2006 and B 3.3.2, November 2001

G.15 Deleted per Rev. 2 of this calculation.

G.16 Deleted per Rev. 2 of this calculation.

G.17 Deleted per Rev. 2 of this calculation.

G.18 Deleted per Rev. 2 of this calculation.

G.19 Deleted per Rev. 2 of this calculation.

G.20 Deleted per Rev. 2 of this calculation.

G.21 Deleted per Rev. 2 of this calculation.

G.22 WCAP-8587, Rev. 6-A, "Methodology for Qualifying Westinghouse WRD Supplied NSSS Safety Related Electrical Equipment", dated March 1983

G.23 Bechtel Specification No. 6118-M-40, Rev.1, "Specification for Heating, Ventilating and Air Conditioning Controls"

G.24 Point Beach Nuclear Plant FSAR Section 6.4 dated June 2007, Section 7.6, dated June 2007, Section 9.8.1, dated June 2007, Section 11.6, dated June 2003, Section 9.5, dated June 2000, and Section 14 for applicable accident analysis

G.25 Westinghouse Correspondence WEP-06-23, dated March 28, 2006, "Input for Current Analysis of Record (RPS/ESFAS)"

G.26 Not used.

G.27 Modification Package IC-259, "Seismic Pressure and Differential Pressure (Unit 1)", completed 7/25/1985

G.28 Modification Package IC-260, "Seismic Pressure and Differential Pressure (Unit 2)", completed 7/25/1985

G.29 PB 634, Rev. 3, "Specification for Safety Assessment System and Plant Process Computer System for the Point Beach Nuclear Plant PPCS 2000"

G.30 PBF-2034, Rev. 74 – Control Room Log – Unit 1, pages 119,120 and 121

G.31 PBF-2035, Rev. 74 – Control Room Log – Unit 2, pages 119, 120 and 121

G.32 NPC-28427, dated September 1, 1983, "Implementation of Regulatory Guide 1.97 for Emergency Response Capability, Point Beach Nuclear Plant, Units 1 and 2".

G.33 EQML (Environmental Qualification Master List), Page 16 of 30, Rev. 29

G.34 Modification Package MR 99-003, "HELB Walls Doors and Blow-Off Panel in the CCW HX Room to Resolve HELB Issue", completed 12/09/2003

G.35 Wisconsin Electric Nuclear Power Business Unit Design and Installation Guidelines, DG-I02, Rev. 0, "Instrument Scaling Methodology"

G.36 Walkdown Record Regarding Minor Divisions for Low Range Containment Pressure Indicators (PI-945, PI-947 and PI-949) – Attachment B

G.37 DIT No. CRR-I&C-006, dated 2/17/2006, Regarding Elevated Temperature Impacts on Control Room Indicators

G.38 Passport Q-Basis Information for PT-945, PT-947 and PT-949 (in "Attribute" tab)

G.39 SPEC-0852, Rev. 2, "Structural Design Criteria for the Point Beach Nuclear Plant", dated July 1967

G.40 Westinghouse Report WEPB-PCS-NAP-FL-001-FS-02, "WEPB Plant Computer Replacement Project Functional Design Specification Document-Flow and Level Corrections", dated October 10, 2001

G.41 Westinghouse Report WEPB-PCS-NAP-IT-001-FS-02, "WEPB Plant Computer Replacement Project Functional Design Specification Document-Incore Thermocouples", dated October 08, 2001

G.42 Passport Preventive Maintenance frequency check for Computer Analog to Digital Converters (located on D080 panel under PMID 17263)

G.43 PBNP Modification Request MR 98-002-C, "PPCS Changeover from Old to New PPCS", dated April 20, 2005

G.44 NPC-36703, Rev. 1, Seismic Evaluation Report, USNRC Generic Letter 87-02, USI A-46 Resolution, dated January 1996

G.45 Design Information Transmittal (DIT) CRR-I&C-014 dated 8/23/07, Supplement to Section 3.3.8 of PBNP Design Guide DG-I01 Rev 4, Methodology to determine the Operability Limit

4.2 Drawings

D.1 BD-12, Sheet 1, Rev. 4, "Block Diagram-Instrument, Reactor Protection System, Reactor Coolant Flow & Containment Press.", PBNP Unit 1

D.2 BD-14, Sheet 1, Rev. 8, "Block Diagram-Instrument, Reactor Control System, Pressurizer Level Control", PB NP Unit 1

D.3 BD-12, Rev. 3, "Block Diagram-Instrument, Reactor Protection System, Reactor Coolant Flow & Containment Press.", PBNP. Unit 2

D.4 BD-14, Rev. 9, "Block Diagram-Instrument, Reactor Control System, Pressurizer Level Control", PBNP Unit 2

D.5 SK-1042, Sheets 1, 2 (13754.22-SK-1042-4, Sheets 1 & 2), Rev. 4, "Replacement Instrument Installation 1-PT945"

D.6 SK-1159, Sheets 1, 2 (13754.22-SK-1159-3, Sheets 1 & 2), Rev. 3, "Replacement Instrument Installation 2-PT945"

D.7 SK-1077 Job WP 22, Sheets 1, 2, 3 (13754.22-SK-1077-4, Sheets 1, 2 & 3), Rev. 4, "Replacement Instrument Installation, 1-PT947 & 1-PT948"

D.8 SK-1132, Sheets 1, 2 (13754.22-SK-1132-4, Sheets 1 & 2), Rev. 4, "Replacement Instrument Installation, 2-PT947 & 2-PT948"

D.9 SK-1056, Sheets 1, 2 (13754.22-SK-1056-4, Sheets 1 & 2), Rev. 4, "Replacement Instrument Installation 1-PT949"

D.10 SK-1127, Sheets 1, 2 (13754.22-SK-1127-3, Sheets 1 & 2), Rev. 3, "Replacement Instrument Installation 2-PT949"

D.11 0082, Sheet 10 (977-82, Sheet 10), Rev. 9, "Cable Spreading Room Air Conditioning System Rack C58"

D.12 CD-3 JOB 10668, Sheet 2, Rev. 8, "Wiring Diagram – Interconnect, Reactor Control System Rack 1R2 (1C112) Bottom", PBNP Unit 1

D.13 CD-5 JOB 10668, Sheet 3, Rev. 4, "Wiring Diagram – Interconnect, Reactor Protection System Rack 1W2 (1C114) Bottom", PBNP Unit 1

D.14 CD-7 JOB 10668, Sheet 3, Rev. 5, "Wiring Diagram – Interconnect, Reactor Control System Rack 1B2 (1C115) Bottom", PBNP Unit 1

D.15 CD-3 JOB 10665, Sheet 2, Rev. 6, "Wiring Diagram – Interconnect, Reactor Control System Rack 2R2 (2C112) Bottom", PBNP Unit 2

D.16 CD-5 JOB 10665, Sheet 3, Rev. 3, "Wiring Diagram – Interconnect, Reactor Protection System Rack 2W2 (2C114) Bottom", PBNP Unit 2

D.17 CD-7 JOB 10665, Sheet 3, Rev. 2, "Wiring Diagram – Interconnect, Reactor Control System Rack 2B2 (2C115) Bottom", PBNP Unit 2

4.3 Procedures

P.1 1ICP 13.016L, Rev. 5, "Reactor Protection and Safeguards Analog Racks Containment Pressure 18 Month Calibration"

P.2 2ICP 13.016L, Rev. 5, "Reactor Protection and Safeguards Analog Racks Containment Pressure 18 Month Calibration"

P.3 1ICP 04.006-2, Rev. 7, "Containment Pressure Transmitter Outage Calibrations"

P.4 2ICP 04.006-2, Rev. 8, "Containment Pressure Transmitter Outage Calibrations"

P.5 Deleted per Rev. 2 of this calculation

P.6 Deleted per Rev. 2 of this calculation

P.7 Deleted per Rev. 2 of this calculation

P.8 Deleted per Rev. 2 of this calculation

P.9 Deleted per Rev. 2 of this calculation.

P.10 Deleted per Rev. 2 of this calculation

P.11 Deleted per Rev. 2 of this calculation.

P.12 Deleted per Rev. 2 of this calculation.

P.13 1ICP 02.001RD, Rev. 9, "Reactor Protection and Engineered Safety Features Red Channel Analog 92 Day Surveillance Test"

P.14 2ICP 02.001RD, Rev. 11, "Reactor Protection and Engineered Safety Features Red Channel Analog 92 Day Surveillance Test"

P.15 1ICP 02.001BL, Rev. 12, "Reactor Protection and Engineered Safety Features Blue Channel Analog 92 Day Surveillance Test"

P.16 2ICP 02.001BL, Rev. 15, "Reactor Protection and Engineered Safety Features Blue Channel Analog 92 Day Surveillance Test"

P.17 1ICP 02.001WH, Rev. 11, "Reactor Protection and Engineered Safety Features White Channel Analog 92 Day Surveillance Test"

P.18 2ICP 02.001WH, Rev. 11, "Reactor Protection and Engineered Safety Features White Channel Analog 92 Day Surveillance Test"

P.19 ICI 12, Rev. 8, "Selection of M&TE for Field Calibrations"

P.20 Fleet Procedure FP-E-RTC-02, Rev. 1, "Equipment Classification – Q-List"

P.21 1ICP 02.020BL, Rev. 10, "Post-Refueling Pre-Startup RPS and ESF Blue Channel Analog Surveillance Test"

P.22 1ICP 02.020RD, Rev. 11, "Post-Refueling Pre-Startup RPS and ESF Red Channel Analog Surveillance Test"

P.23 1ICP 02.020WH, Rev. 10, "Post-Refueling Pre-Startup RPS and ESF White Channel Analog Surveillance Test"

P.24 2ICP 02.020BL, Rev. 10, "Post-Refueling Pre-Startup RPS and ESF Blue Channel Analog Surveillance Test"

P.25 2ICP 02.020RD, Rev. 10, "Post-Refueling Pre-Startup RPS and ESF Red Channel Analog Surveillance Test"

P.26 2ICP 02.020WH, Rev. 10, "Post-Refueling Pre-Startup RPS and ESF White Channel Analog Surveillance Test"

P.27 OM 1.1, Rev. 28, "Conduct of Plant Operations, PBNP Specific"

P.28 ARP 1-PPCS-018, Rev 0, "Priority Alarm Containment Pressure Unit 1"

P.29 ARP 2-PPCS-018, Rev 0, "Priority Alarm Containment Pressure Unit 2"

4.4 Vendor

V.1 Foxboro EQ Transmitters Manual, VTM #00432, Rev. 21

V.2 Foxboro Corporate Product Specification CPS-0804, Rev. G, "Nuclear Electronic Gauge Pressure Transmitters N-E11GM Series, Style A&B", VTM #00432, Rev. 21

V.3 Foxboro Instrumentation Composite Book 4, VTM #00623A4, Rev. 11 – Foxboro Technical Information 18-692, dated January 1969, "Model 63U-B Duplex Alarm / Model 63U-F Duplex Difference Alarm"

V.4 Westinghouse Component Instruction Manual, Main Control Board – Part 1, VTM #00132A, Rev. 25

V.5 Foxboro Instrumentation Composite Book 4, VTM #00623A4, Rev. 11 – Foxboro Technical Information 39-162c, dated February 1968, "66B Series Current Repeater, Style D"

V.6 Combustion Engineering, Inc. 1485-ICE 1234, Rev. 2, "Functional Design Description for Seismic Safety Parameter Display System (SSPDS)", PBNP VTM #01209, Book 4, Rev. 21

V.7 Johnson Controls Temperature Composite Book 2, VTM #00309B, Rev. 5 – T-4000 Series Pneumatic Room Thermostats (Tab – Thermostats & Thermometers)

V.8 Foxboro Instrumentation Composite Book 4, VTM #00623A4, Rev. 11 – Foxboro Technical Information 18-635, dated November 1969, "Model 610A Power Supply, Styles B and C"

V.9 Combustion Engineering, Inc. 1485-ICE 1239, Rev. 2, "Functional Design Description for Safety Assessment System and Plant Process Computer System", PBNP VTM #01209, Book 5, Rev. 21

V.10 Combustion Engineering, Inc., "SAS/PPCS Computer System – Volume 21 – Manual Reinstated 5/30/03 Equipment in Plant", PBNP VTM #01055U, Revision 11, Tab F, "RTP7436/10 Digital and Analog Loopback and Calibration Card"

V.11 User Guide HP 34401A Multimeter, VTM # 01692, Rev. 0

4.5 Calculations

C.1 PBNP-IC-13, Rev. 0, "Foxboro N-E11GM Transmitters Drift Calculation"

C.2 PBNP-IC-06, Rev. 0, "Foxboro 63U-BC Bistable Drift Calculation"

C.3 PBNP-IC-07, Rev. 0, "Westinghouse 252 Indicator Drift Calculation"

C.4 Engineering Evaluation No. 2005-0006, Rev. 0, "Drift Calculations Evaluation"

C.5 M-09334-357-HE.1, Appendix L, Rev. 3, "Environmental Effects of a HELB in the CCW Heat Exchanger Room with Vent Path to the Turbine Building"

C.6 Deleted

C.7 97-0140, Rev. 2, "Revised Radiation Dose to Equipment Outside of Containment Following a Design Basis LOCA"

C.8 Engineering Evaluation No. 2001-0032 Rev 6, "Parametric Values"

5.0 ASSUMPTIONS

5.1 Validated Assumptions

5.1.1 Deleted per Rev. 2 of this calculation.

5.1.2 Deleted per Rev. 2 of this calculation.

5.1.3 Deleted per Rev. 2 of this calculation.

5.1.4 Deleted per Rev. 2 of this calculation.

5.1.5 It is assumed that the maximum power supply effect for the I/I converters (isolators) is 1.0 % span and this effect is considered a random error.

Basis: PBNP evaluation of A/R 141685 (CR 95-109) (Ref. G.8) indicates that the I/I Converter output fluctuates between 0.5 to 1.0 % due to the effect on the non-regulated portion of the internal 50 volt power supply in which the I/I converter is connected. Furthermore, this error should be treated as random not a bias. Therefore, the maximum fluctuation of ± 1 % is used in this calculation as the power supply effect for the I/I Converter.

5.1.6 Deleted per Rev. 2 of this calculation.

5.1.7 It is assumed that the accuracy of the PPCS display loop is ± 0.51 % of full scale. This accuracy value applies to the loop from the PPCS analog input field terminations to the PPCS printed and/or display output devices. The accuracy value includes the temperature effect, power supply effect, humidity effect, radiation effect, seismic (vibration) effect, and drift over the entire PPCS normal operating range.

Basis: Per Reference G.29, the PPCS replacement modification shall process inputs and outputs from existing I/O devices. As such, the existing signal processing I/O isolation and signal conversion cards were not replaced as a result of Modification Request 98-002. References V.6 and V.9 document that the maximum total system error for the old PPCS computer system, during normal operating environments, from field terminations to the printed and/or display output shall be within ± 0.5 % of the full scale (excluding errors before input of the analog input).

A review of all Westinghouse Plant Computer Replacement Reports revealed that the output values for all newly installed PPCS equipment (not including the existing I/O devices discussed in the above paragraph) shall be within 0.1 % of hand calculated results, with the following two exceptions:

1) For results based on polynomial curves, the output values shall be within 1.0 % of hand calculated results (Reference G.40)

2) For results based on steam tables, the output values shall be within 0.5 % of hand calculated results (References G.40 and G.41).

The PPCS points considered in this calculation display the Low Range Containment Pressure (in units of psig) based on a 10-50 mAdc input signal from the loop rack components. Since the Low Range Containment Pressure loop is not

a component of References G.40 or G.41, accuracy values associated with polynomial curves and steam tables are not applicable, and the accuracy of the newly installed PPCS equipment (not including the existing I/O devices) is considered to be 0.1 %.

Therefore, to determine the overall PPCS system accuracy, the specified values of 0.1 % (for newly installed PPCS equipment) and 0.5 % (for existing PPCS equipment) are combined using the SRSS methodology as follows:

$$\text{PPCSa} \quad = \pm\sqrt{0.5^2 + 0.1^2} \quad = \pm 0.51\%$$

In accordance with Section 3.3.3.3 of Reference G.1, if the manufacturer does not specify environmental errors associated with the subject normal environmental accuracy ratings these effects are considered to be included in the specified accuracy ratings or are considered to be negligible.

Per Reference V.10, the PPCS analog-to-digital (A/D) converters have a drift value of ± 0.01 % for a period of 1-year. This value is not significant when compared to the much larger accuracy value of ± 0.51 %. Per Reference G.42, the A/D converters are calibrated approximately every 36 weeks to eliminate any potential drift. In addition these components historically never need to be calibrated because they do not drift. Therefore, the vendor specified drift value is considered negligible.

Per Section 3.3.3.15 of Reference G.1, in the absence of a vendor specified drift value, it is typical for the device accuracy to be substituted in place of drift. However, in the case of PPCS, considering an additional ± 0.51 % for calculating the As-Found Tolerance would create a value large enough to allow PPCS degradation to go undetected. Conversely, by assuming that the drift value is included in the accuracy value, the As-Found Tolerance would remain tight enough to detect PPCS degradation prior to system failure. Therefore, the PPCS drift is conservatively encompassed by the ± 0.51 % accuracy value.

5.1.8 It is assumed that the existing As-Left setting tolerances for the instruments evaluated in this calculation are as follows:

Transmitters	= ± 0.20 mAdc
Bistables	= ± 0.002 Vdc; to be reduced to ± 0.001 Vdc*
Current-to-Current Converter	= ± 0.20 mAdc; to be reduced to ± 0.10 mAdc*
Control Board Indicator	= ± 0.80 mAdc; to be reduced to ± 0.70 mAdc*
PPCS Indication	= ± 0.3 psig

Basis: These As-Left setting tolerance values have historically provided acceptable instrument performance and consistency in the calibration program. These As-Left setting tolerances are routinely achievable for the installed instruments, consistent with safety limits and test equipment capability. They are currently used in practice at the station, and implemented by calibration procedures listed in References P.1 through P.4 and P.13 through P.18.

*However, in an effort to minimize the total loop error for trip setpoints and the indicating loop for Tech Spec surveillance to within manageable tolerances,

PBNP has decided to reduce the setting tolerance of the I/I Converter, bistable and control room indicator by 0.25% span. Therefore, the setting tolerance for the I/I Converter, bistable and control room indicator used in this calculation is the existing setting tolerance minus 0.25% span.

As-Found setting tolerances are to be determined in this calculation.

5.1.9 It is assumed that the maximum environmental temperature of Control Room and Computer Room instrumentation is 120 °F.

Basis: Table 6-1 of WCAP-8587 (Ref. G.22) states that when the HVAC is non-safety related, a normal temperature of 120 °F (loss of chiller) should be used. Since the Control Room and Computer Room HVAC System chiller is not powered from an essential power bus, the Control Room and Computer Room HVAC System is considered as a non-safety related system (see Assumption 5.1.10 for maximum temperature used for PPCS evaluation).

5.1.10 It is assumed that the maximum environmental operating temperature for the existing installed PPCS system is 95 °F.

Basis: Reference G.43 (Attachments 1 and 5) identifies that the most temperature sensitive component of the new PPCS system is the non-ruggedized Sparc computer, which has an operating temperature limit of 95 °F. Note: the maximum temperature used for evaluating PPCS uncertainties is 85 °F, which is bounded by the PPCS operating temperature limit.

5.1.11 It is assumed that the elevated radiation levels in the Auxiliary Building, which could occur following initiation of containment sump recirculation, have no radiation effect on the Containment High Pressure Safety Injection and containment High-High Pressure Containment Spray initiation setpoints.

Basis: At the time containment sump recirculation is initiated, the level in the Refueling Water Storage Tank (RWST) has fallen significantly. This can only occur if a safety injection has already occurred. Therefore, once containment sump recirculation is initiated, the safety injection function on High Containment Pressure has already occurred. Similarly, during LOCA, containment spray actuation occurs during the injection phase contributing to the RWST depletion prior to recirculation. FSAR section 6.4 (Ref G.24) states that Containment Spray action is only credited during the injection phase and it is expected that Containment Spray is no longer required during the recirculation phase. In any case the automatic CS actuation would only occur during the injection phase. Therefore when the elevated radiation levels in the Auxiliary building following containment sump recirculation could occur, the High-High Pressure Containment Spray initiation function is no longer required.

5.1.12 It is assumed that the elevated radiation levels in the Auxiliary Building, which could occur following initiation of containment sump recirculation, have no radiation effect on the Containment High Pressure Condensate Isolation trip setpoint.

Basis: The condensate isolation function serves as a backup protection function in the event of a steam line break inside containment with a failure of the main feedwater lines to isolate. A single failure of a main feedwater regulating valve to

close on a safety injection signal could allow feedwater addition to the faulted steam generator, leading to containment overpressure as described in Section 7 of Tech Spec Bases B3.3.2 (Ref. G.14).

A steam line break inside containment does not release significant radioactivity to the containment (similar to a steam line break outside containment that releases directly to the environment). The CPCI trip will occur rapidly without any transmitter exposure to elevated radiation. Therefore, there is no source of radiation that needs to be considered for the sensor uncertainty in determining the error for this trip function.

5.1.13 It is assumed that the temperature of the containment pressure transmitters located in the PAB will not be above 104°F prior to the time when the High and High-High containment pressure ESFAS trips occur.

Basis: The High Containment Pressure SI actuation function and High-High Containment pressure CS initiation are both credited as primary trips in the steam line break inside containment integrity analysis. The High-High containment pressure CS initiation function is also credited in the LBLOCA containment integrity analysis (Reference letter WEP-06-23). For each of these accidents the containment pressure rapidly increases above the setpoints within the first few minutes of the accident as shown in FSAR section 14 (Ref G.24)

Revision 2 of this calculation used maximum normal operating temperature as 104°F for normal conditions, and 120°F for accident conditions in the auxiliary building. However, the design temperatures for normal operating conditions in the auxiliary building are 65°F in the winter and 85°F in the summer (Ref G.23). Loss of PAB ventilation does not need to be assumed prior to the applicable accidents (Ref G.24), but for conservative purposes, this revision will use 104°F for the maximum temperature conditions of the transmitters to account for local temperature variations. See section 6.4.for further environmental conditions.

5.2 Unvalidated Assumptions

None

6.0 DESIGN INPUTS

6.1 Loop Definitions

The Low Range Containment Pressure Control Loops (channels) analyzed in this calculation are shown in References D.1 through D.4 for Units 1 and 2, explained in more detail in the following sections (6.2 and 6.3).

6.2 Loop Block Diagram

The block diagram below (Fig. 6.2-1) shows the component configuration for the Low Range Containment Pressure instrument loops that are addressed in this calculation. The diagram is generic and applies to loops P-945, P-947 and P-949 for both Units 1 and 2. See References D.1 through D.4 for more details.

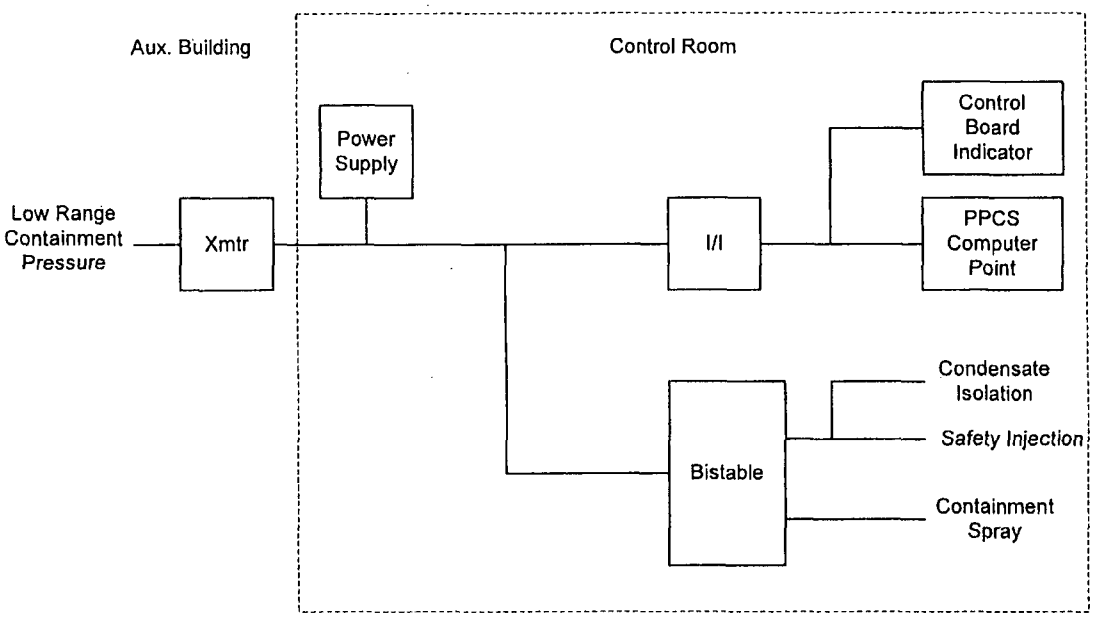

Figure 6.2-1 Low Range Containment Pressure Loop Block Diagram

6.3 Component Models and Tag Numbers

The following table identifies each component shown in Figure 6.2-1 for each of the three Low Range Containment Pressure instrument loops (these tag numbers are applicable to both Units 1 and 2), and provides the associated plant information for use throughout this calculation.

Table 6.3-1 Low Range Containment Pressure Instruments

Component	Model	P-945	P-947	P-949	Reference(s)
Transmitter	Foxboro N-E11GM-HIB1-BEL/AEL	PT-945	PT-947	PT-949	G.27, G.28, V.1, V.2, P.3, P.4, D.1 – D.10
Power Supply	Foxboro 610AC-O	PQ-945	PQ-947	PQ-949	V.8, D.1 – D.4
Containment Pressure Safety Injection/Containment Spray Bistable	Foxboro 63U-BC-OHEA	PC-945A/B	PC-947A/B	PC-949A/B	P.13 – P.18, V.3, D.1 – D.4
Isolator (Current-to-Current Converter)	Foxboro 66BC-O	PM-945	PM-947	PM-949	P.1, P.2, V.5, D.1 – D.4
Low Range Containment Pressure Control Board Indicator	Westinghouse HX-252	PI-945	PI-947	PI-949	P.1, P.2, V.4, D.1 – D.4
PPCS	N/A	P-945	P-947	P-949	P.1, P.2

6.4 Environmental Considerations

The Low Range Containment Pressure channels P-945, P-947 and P-949, shown in block diagram form in Figure 6.2-1, provide input to the Engineered Safety Features Actuation System (ESFAS) and indication in the control room and at the PPCS.

The Control Room Indication and PPCS display are used to monitor Low Range Containment Pressure and are associated with Parametric Values (Ref. G.30 and G.31). Parametric values are limits or tolerances due to indication uncertainties to be included in the operator logs (Ref. G.30 and G.31) to ensure that the Tech Spec limits are not violated. Routine surveillance of instrumentation (in the Control Room) for parametric values to determine Tech Spec Compliance for a specific process is performed during normal plant operating conditions only.

The Control Room Indication to monitor Low Range Containment Pressure also provides input for EOP operator actions. References G.32 and G.38 classify Low Range Containment Pressure as a Regulatory Guide 1.97, Type A, B and C variable. FSAR Table 7.6-1 (Ref. G.24) and the Q Basis codes 7 and 21 in Passport (Ref. G.38) identify the instrumentation as a Category 1 variable (Note: PBNP is in the process of adding Reg. Guide 1.97 Category values into Passport). Q Basis codes 7 and 21 are defined in Fleet Procedure FP-E-RTC-02 (Ref. P.20).

Tech Spec Table 3.3.2-1 (Ref. G.14) indicates that Low Range Containment Pressure channels P-945, P-947 and P-949 provide input to ESFAS by initiating a Safety Injection (SI) Signal on High Containment Pressure and Containment Spray Actuation Signal on High-High Containment Pressure to mitigate a LOCA/HELB event. The Low Range Containment Pressure channels also initiate a Condensate Isolation Signal on High Containment Pressure. The condensate isolation function serves as a backup protection function in the event of a Main Steam Line Break inside the containment with the failure

of the Main Feedwater to isolate. Initiation of SI signal, Containment Spray Actuation Signal and Condensate Isolation Signal are safety-related functions.

6.4.1 Auxiliary Building

Per References D.5 through D.10 and G.33, the Low Range Containment Pressure transmitters are located in the non-harsh area of the Auxiliary Building at the following locations:

Table 6.4-1 Transmitter Locations

Transmitters	Location	Room Area
1PT-945	N-10, El. 26'-0"	Pipeway #2
1PT-947	M-10, El. 8'-0"	Pipeway #2
1PT-949	J-8, El. 8'-0"	Pipeway #1
2PT-945	N-13, El. 26'-0"	Pipeway #3
2PT-947	M-13, El. 8'-0"	Pipeway #3
2PT-949	J-15, El. 8'-0"	Pipeway #4

The design temperatures for the Auxiliary Building HVAC system per Ref. G.23 are 65 °F during winter and 85 °F during summer. The HVAC unit keeps the minimum normal temperature above 65 °F during the outage. In accordance with Section 3.3.4.7 of Reference G.1, the minimum calibration temperature may conservatively be used and therefore 65°F is to be used as the calibration temperature in this calculation.

FSAR Section 9.5 (Ref. G.24) states that the Auxiliary Building HVAC is non-safety related. From Table 6-1 of Reference G.22, the Auxiliary Building maximum temperature for normal conditions is 104 °F. For a non-safety related HVAC system, the maximum temperature is 120 °F due to a loss of the HVAC Cooling Unit (Ref. G.22, Table 6-1). Since Tech Spec compliance surveillance is only performed during normal plant operating conditions, for the indication and PPCS loops associated with parametric values, 104 °F is used as the maximum temperature. The trip functions (SI, Condensate Isolation and Containment Spray) will also use 104 °F as the maximum temperature. These trips are shown to happen a short duration after the accident that they are required for (Ref G.24), and the HVAC system can be assumed to be functioning prior to the event (assumption 5.1.13). Previous revisions of this calculation have used 120 °F as the maximum temperature. However, based on the assumed availability of the HVAC system, the trips occurring quickly during a LOCA or MSLB, and the max design temperature of 85°F (Ref G.23) of the PAB; using 104 °F as the maximum temperature is considered conservative. For EOP (Regulatory Guide 1.97 Category 1 variables), 120 °F is used as the maximum temperature since the instrumentation is expected to operate under compromised environmental conditions caused by a loss of the HVAC Cooling Unit.

Per Reference C.5, a new HELB barrier was installed per MR 99-003 (Ref. G.34) to confine postulated HELB to the CCW HX/BAT room and thereby prevent the steam from entering other areas of the Auxiliary Building. Hence, these areas do not experience environmental effects from postulated HELB. The areas where

the transmitters are located are not in the CCW HX/BAT room, and therefore, do not experience the elevated temperature effects from the postulated accidents (LOCA or HELB). However, the highest radiation at the transmitter locations due to recirculation of coolant during a LOCA is 7.82×10^5 RADs (Ref. C.7). The elevated radiation effects are not applicable to the Containment High-High Pressure Containment Spray, Containment High Pressure Safety Injection, and Condensate Isolation trip setpoint, since the initiation of the trips are assumed to occur before containment sump recirculation is started (Assumptions 5.1.11 and 5.1.12).

The Auxiliary Building normal humidity of 70 % and radiation of 400 RADs (40-year dose) is documented in Reference G.22.

Table 6.4-2 Auxiliary Building Ambient Environmental Conditions

Function	Calibration Temp. (°F)	Max. Temperature (°F)	Humidity (%)	Radiation (RADS)
Normal (For Parametric Values)	65	104	70	400 (40 year dose)
Normal (For EOP Input)	65	120	70	400 (40 year dose)
Accident (For EOP Input)	65	120	70	7.82×10^5 RADs
Accident (For SI and Condensate Isolation Trips	65	104	70	400 (40 year dose)
Accident (For Containment Spray Trip)	65	104	70	400 (40 year dose)

6.4.2 Control Room and Computer Room

The rack components and control board indicators are located in the Control Room (Ref. P.1 and P.2).

The Control Room HVAC System controls the temperature of the Control Room and the Computer Room at 75 °F per Reference G.23. Per FSAR Section 9.8.1 (Ref. G.24), the temperature can vary ± 10 °F, resulting in a normal temperature range of 65 °F to 85 °F. This temperature variation is supported by the fact that the Johnson Controls T-4002-202 thermostat (Ref. D.11) in the Control Room is capable of controlling the room temperature (Ref.V.7) within these bounds. In accordance with Section 3.3.4.7 of Reference G.1, the minimum calibration temperature may conservatively be used and therefore the minimum temperature of 65°F is used as the calibration temperature for the components in the Control Room and Computer Room.

Since Tech Spec compliance surveillance of Control Room Indicators and PPCS displays associated with parametric values is only performed during normal plant operating conditions, 85 °F is used as the maximum temperature for this function (Note, the maximum temperature limit for the PPCS is 95 °F per Assumption 5.1.10). Per Assumption 5.1.9, the maximum expected temperature is 120 °F. This maximum temperature of 120 °F will be used and is justified by the intended functions of the Low Range Containment Pressure loops (safety-related and Regulatory Guide 1.97 Category 1 variable). These functions necessitate the instrumentation to operate under compromised environmental conditions caused by a loss of the HVAC Cooling Unit. The Control Room humidity of 50% and 95% (loss of chiller) is documented in Reference G.22. Section 11.6.2 (fifth paragraph) of FSAR (Ref. G.24) states that the control room is in Zone I and Table 11.6-1 states the maximum dose rate in Zone I is 1.0 mrem/hr.

Table 6.4-3 Control Room and Computer Room Ambient Environmental Conditions

Function	Calibration Temp. (°F)	Max. Temperature (°F)	Humidity (%)	Radiation (RADs)
For Parametric Values	65	85	50	1 mrem/hr
For Trips and EOP Input	65	120	95	1 mrem/hr

6.5 Existing Analytical Limit (AL), Tech Spec Allowable Value (AV) and Field Trip Setpoint (FTSP)

Per Reference G.25, High Containment Pressure-Safety Injection / High Containment Pressure-Condensate Isolation of 6 psig is credited only in the steam line break (SLB) analyses for PBNP. High-High Containment Pressure-Containment Spray trip of 30 psig is credited in the steam line break (SLB) and the loss of coolant accident (LOCA) analyses for PBNP.

Table 6.5-1 ESFAS Trip Function

ESFAS Trip Function	Analytical Limit (Ref. G.25)	Tech Spec Allowable Value (Ref. G.14)	Field Trip Setpoint (Ref. P.13 through P.18)
High Containment Pressure – Safety Injection and Condensate Isolation	6 psig	≤ 6 psig	5 psig
High-High Containment Pressure – Containment Spray	30 psig	≤ 30 psig	25 psig

6.6 Technical Surveillance Requirement

From the Technical Specifications LCO 3.6.4 (Ref. G.14), the low range containment pressure indication is used by the operators to verify that containment pressure shall be ≥ -2.0 psig and ≤ +2.0 psig.

7.0 METHODOLOGY

7.1 Uncertainty Determination

The uncertainties and loop errors are calculated in accordance with Point Beach Nuclear Plant's Instrument Setpoint Methodology, DG-I01 (Ref. G.1). This methodology uses the square root of the sum of the squares (SRSS) method to combine random and independent errors, and algebraic addition of non-random or bias errors. Clarifications to this methodology are noted below:

A) Treatment of 95/95 and 75/75 Values

To convert 95/95 uncertainty values to 75/75 uncertainty values (when applicable); this calculation uses the conversion factor specified in Section 3.3.3.13 of Reference G.1. All individual instrument uncertainties are evaluated and shown as 95/95 values, and are combined under the Total Loop Error radical as such. Conversion to a 75/75 value is performed after the 95/95 TLE radical is computed.

B) Treatment of Significant Digits and Rounding

This uncertainty calculation will adhere to the rules given below for the treatment of numerical results.

1. For values less than 10^2, the rounding of discrete calculated instrument uncertainties (e.g. reference accuracy, temperature effect, etc.) should be performed such that the numerical value is restricted to three (3) or less digits shown to the right of the decimal point.

   For example, an uncertainty calculated as 0.6847661 should be listed (and carried through the remainder of the calculation) as 0.685.

   An uncertainty calculated as 53.235487 should be listed (and carried through the remainder of the calculation) as 53.235.

2. For values less than 10^3, but greater than or equal to 10^2, the rounding of discrete calculated instrument uncertainties (e.g. reference accuracy, temperature effect, etc.) should be performed such that the numerical value is restricted to two (2) or less digits shown to the right of the decimal point.

   For example, an uncertainty calculated as 131.6539 should be listed (and carried through the remainder of the calculation) as 131.65.

3. For values greater than or equal to 10^3, the rounding of discrete calculated instrument uncertainties (e.g. reference accuracy, temperature effect, etc.) should be performed such that the numerical value is restricted to one (1) or less digits shown to the right of the decimal point.

   For example, an uncertainty calculated as 2251.4533 should be listed (and carried through the remainder of the calculation) as 2251.5.

4. For Total Loop Uncertainties and Channel Check Tolerances, the calculated result should be rounded to the numerical precision that is readable on the

associated loop indication or recorder. If the loop of interest does not have an indicator or recorder, the Total Loop Error should be rounded to the numerical precision currently used in the associated calibration procedure for the end device in that loop (e.g. trip unit or alarm unit).

Note: To avoid excessive rounding in the determination of EOP setpoints in WEP-SPT-29, this calculation will provide the Total Loop Error as calculated for EOP input. WEP-SPT-29 will round resultant EOP setpoint values to the numerical precision that is readable on the associated indicator.

5. For calibration tolerances, the calculated result should be rounded to the numerical precision currently used in the associated calibration procedure.

These rules are intended to preserve a value's accuracy, while minimizing the retention of insignificant or meaningless digits. In all cases, the calculation preparer shall exercise judgment when rounding and carrying numerical values, to ensure that the values are kept practical with respect to the application of interest.

C) Determination of Channel Check Tolerance (CCT)

Per Section 3.3.8.7 of Reference G.1, the CCT value is considered a 75/75 value. However, converting the CCT from 95/95 into a 75/75 value restricts the tolerance allowed for the indication loop devices and essentially makes it more difficult for the plant to meet their requirements. This approach is considered to be overly conservative. Therefore, this calculation will determine CCT as a 95/95 value.

Although Reference G.1 does not discuss the rounding techniques for CCT values, it is typical for tolerance values to be rounded down. This approach tightens the tolerance band, thus creating a conservative tolerance value. However, in the case of CCT, when a channel is determined non-operational, it is most likely to be found grossly out of tolerance, i.e., the difference between the channel readings far surpasses the allowable CCT value. Therefore, in an effort to reduce the occurrence of false out of tolerance CCT readings, this calculation will round the CCT value up to the precision that is readable on the indication device.

D) Seismic Consideration for Trip Setpoints

Seismic uncertainty must be evaluated as a contributor to overall loop error for some (not all) RPS/ESFAS trip setpoints. The specific setpoints that require evaluation for seismic effects are those that are credited as primary trips for accidents/transients that could credibly occur as the result of a seismic event. These setpoints are found in the Seismic Evaluation Report, USNRC Generic Letter 87-02, USI A-46 Resolution (Ref. G.44) and are listed below.

Table 7.1-1 Credible Accidents/Transients During or Following a SSE

FSAR Section	Accident/Transient	Primary Reactor Trip Variable
14.1.3	Rod Cluster Control Assembly (RCCA) Drop	Low Pressurizer Pressure
14.1.6	Reduction in Feedwater Enthalpy	None Required
14.1.7	Excessive Load Increase	None Required
14.1.8	Loss of Reactor Coolant Flow	Low RCS flow
14.1.9	Loss of External Electrical Load	Over Temp – Delta T High Pressurizer Pressure Low-Low S/G Level
14.1.10	Loss of Normal Feedwater	Low-Low S/G Level
14.1.11	Loss of All AC Power to the Auxiliaries	Low-Low S/G Level
14.2.5	Stuck Open Steam Dump or S/G Safety Valve	None Required

Trip setpoints not shown in the above table do not need to include a seismic uncertainty term because their trip function is not required during or following a seismic event.

Seismic versus Harsh Environment

Seismic events do not create a harsh environment. Therefore, seismic uncertainties and harsh environment uncertainties need not be combined in a single calculation of total loop error. If any of the above trips credited during a seismic event are also credited as primary trips during a LOCA/MSLB that creates a harsh environment, then the uncertainty term (seismic or harsh environment) that results in the worst-case (largest) of the two TLEs should be applied for determining the limiting trip setpoint.

E) Seismic Consideration for EOP Inputs

The PBNP EOP setpoints are developed in accordance with the recommendations of the Westinghouse Owners Group Emergency Response Guidelines (ERGs). The NRC reviews and approves the ERGs and plants with a Westinghouse NSSS are expected to follow them, documenting any plant-specific differences.

The ERG Executive Volume provides guidance on the subject of instrument uncertainty as it relates to EOP setpoints,. This guidance includes a discussion of the following components that contribute to the total instrument channel accuracy:

process measurement accuracy
primary element accuracy
sensor allowable deviation
reference accuracy
temperature effect
pressure effect

drift
rack allowable deviation
rack calibration accuracy
rack environmental effects
rack drift
comparator setting accuracy

environmental allowance due to the effects of being exposed to a high-energy line break: temperature, pressure, humidity, radiation, chemical spray, acceleration, vibration, and reference leg heatup

indicator allowable deviation

Nowhere in this detailed guidance is there any mention of a seismic term. (It should be noted that, as is clear from the context, the vibration and acceleration terms mentioned in the above list refer only to the vibration or acceleration associated with a high-energy line break.) That is, the ERG recommendations do not require that seismic effects be included in the determination of instrument uncertainty for EOP setpoints.

Therefore, seismic effects will not be considered in the instrument loop uncertainties used in determining EOP setpoints.

7.1.1 Sources of Uncertainty

Per Reference G.1, the device uncertainties to be considered for normal and adverse environmental conditions include the following:

Process Error	(PE_n and PE_a)
Sensor Accuracy	(Sa)
Sensor Drift	(Sd)
Sensor M&TE	(Sm)
Sensor Setting Tolerance	(Sv)
Sensor Power Supply Effect	(Sp)
Sensor Temperature Effect	(St_{n1}, St_{n2} and St_a)
Sensor Humidity Effect	(Sh_n and Sh_a)
Sensor Radiation Effect	(Sr_n, Sr_{a1} and Sr_{a2})
Sensor Seismic Effect	(Ss_n and Ss_a)
Sensor Static Pressure Effect	($Sspe_n$ and $Sspe_a$)
Sensor Overpressure Effect	($Sope_n$ and $Sope_a$)
Bistable Accuracy	(Ba)
Bistable Drift	(Bd)
Bistable M&TE	(Bm)
Bistable Setting Tolerance	(Bv)
Bistable Power Supply Effect	(Bp)
Bistable Temperature Effect	(Bt)
Bistable Humidity Effect	(Bh)
Bistable Radiation Effect	(Br)
Bistable Seismic Effect	(Bs)

Current-to-Current Converter Accuracy	(I/Ia)
Current-to-Current Converter Drift	(I/Id)
Current-to-Current Converter M&TE	(I/Im)
Current-to-Current Converter Setting Tolerance	(I/Iv)
Current-to-Current Converter Power Supply Effect	(I/Ip)
Current-to-Current Converter Temperature Effect	(I/It)
Current-to-Current Converter Humidity Effect	(I/Ih)
Current-to-Current Converter Radiation Effect	(I/Ir)
Current-to-Current Converter Seismic Effect	(I/Is)
Indicator Accuracy	(Ia)
Indicator Drift	(Id)
Indicator M&TE	(Im)
Indicator Setting Tolerance	(Iv)
Indicator Power Supply Effect	(Ip)
Indicator Temperature Effect	(It)
Indicator Humidity Effect	(Ih)
Indicator Radiation Effect	(Ir)
Indicator Seismic Effect	(Is)
Indicator Readability Effect	(Irea)
PPCS Accuracy	(PPCSa)
PPCS Drift	(PPCSd)
PPCS M&TE	(PPCSm)
PPCS Setting Tolerance	(PPCSv)
PPCS Power Supply Effect	(PPCSp)
PPCS Temperature Effect	(PPCSt)
PPCS Humidity Effect	(PPCSh)
PPCS Radiation Effect	(PPCSr)
PPCS Seismic Effect	(PPCSs)
PPCS Readability Effect	(PPCSrea)

The uncertainties will be generally calculated in percent of span and converted to the process units as required.

Per Section 3.3.3.13 of Ref. G.1, the uncertainties listed above are considered 2 sigma (95% probability/95% confidence) unless otherwise specified.

Per Sections 3.1 and 3.2 of Reference G.1, the Low Range Containment Pressure functions are classified into the following categories:

- The High and High-High Containment Pressure Trip Setpoints, which provide inputs to ESFAS, are classified as a Category A function. Therefore, the total loop error should be expressed as 95/95 (95% probability at a 95% confidence level) value.
- As indicated in Section 6.4, the Control Room indication total loop error, which provides input to EOP operator actions, is a Regulatory Guide 1.97, Type A, B and C, Category 1 variable. Per Section 3.1 of Reference G.1, the instrument loop is classified as Category A and C

functions. Therefore, the total loop error should be expressed as 95/95 and 75/75 values.

- The PPCS display and Control Room Indication are associated with the parametric values per References G.30 and G.31, and are classified as a Category B function. Therefore, the total loop error should be expressed as a 75/75 value.

7.1.2 Total Loop Error (TLE) Equation Summary

The Total Loop Error for instrument loops is determined in accordance with the requirements of Reference G.1. This methodology uses the square root of the sum of the squares (SRSS) method to combine the applicable random and independent errors, and algebraic addition of non-random or bias errors (of like sign).

The equations have been modified accordingly to only include uncertainties applicable to the instrumentation loops treated in this calculation.

7.1.2.1 Total Trip Loop Error (TLE_{TRIP})

Per Figure 6.2-1, the Total Trip Loop Error for the Low Range Containment High Pressure SI / Condensate Isolation and High-High Pressure Containment Spray actuation (TLE_{TRIP}) consists of the following uncertainties (per Assumption 5.1.11 and 5.1.12, high radiation effect is not applicable to these trips):

$$TLE_{TRIP} = \pm\sqrt{\begin{array}{l} Sa^2 + Ba^2 + Sd^2 + Bd^2 + Sm^2 + Bm^2 \\ + Sv^2 + Bv^2 + Sp^2 + Bp^2 + St_{nl}{}^2 + Bt^2 \\ + Sh_a{}^2 + Bh^2 + Sr_{al}{}^2 + Br^2 + Ss_a{}^2 + Bs^2 \\ + Sspe_a{}^2 + Sope_a{}^2 \end{array}} \pm PE_a \pm \text{Bias} \quad \text{(Eq. 7.1.2-1)}$$

7.1.2.2 Total Indicator Loop Error (TLE_{IND})

Per Figure 6.2-1, the Total Loop Error for the Low Range Containment Pressure Normal and EOP Indications consist of the following uncertainties:

$$TLE_{IND\text{-}NORM} = \pm\sqrt{\begin{array}{l} Sa^2 + I/Ia^2 + Ia^2 + Sd^2 + I/Id^2 + Id^2 \\ + Sm^2 + I/Im^2 + Im^2 + Sv^2 + I/Iv^2 + Iv^2 \\ + Sp^2 + I/Ip^2 + Ip^2 + St_{nl}{}^2 + I/It^2 + It^2 \\ + Sh_n{}^2 + I/Ih^2 + Ih^2 + Sr_n{}^2 + I/Ir^2 + Ir^2 \\ + Ss_n{}^2 + I/Is^2 + Is^2 + Sspe_n{}^2 + Sope_n{}^2 + Irea^2 \end{array}} \pm PE_n \pm \text{Bias} \quad \text{(Eq. 7.1.2-2a)}$$

where:

$TLE_{IND\text{-}NORM}$ = Total Normal Indicator Loop Error

$$TLE_{IND\text{-}EOP\,(normal)} = \pm\sqrt{\begin{array}{l} Sa^2 + I/Ia^2 + Ia^2 + Sd^2 + I/Id^2 + Id^2 \\ + Sm^2 + I/Im^2 + Im^2 + Sv^2 + I/Iv^2 + Iv^2 \\ + Sp^2 + I/Ip^2 + Ip^2 + St_{n2}{}^2 + I/It^2 + It^2 \\ + Sh_n{}^2 + I/Ih^2 + Ih^2 + Sr_{a1}{}^2 + I/Ir^2 + Ir^2 \\ + Ss_n{}^2 + I/Is^2 + Is^2 + Sspe_n{}^2 + Sope_n{}^2 + Irea^2 \end{array}} \pm PE_n \pm Bias$$

(Eq. 7.1.2-2b)

where:

$TLE_{IND\text{-}EOP(normal)}$ = Total Loop Error for EOP Indication under normal conditions

$$TLE_{IND\text{-}EOP\,(accident)} = \pm\sqrt{\begin{array}{l} Sa^2 + I/Ia^2 + Ia^2 + Sd^2 + I/Id^2 + Id^2 \\ + Sm^2 + I/Im^2 + Im^2 + Sv^2 + I/Iv^2 + Iv^2 \\ + Sp^2 + I/Ip^2 + Ip^2 + St_{n2}{}^2 + I/It^2 + It^2 \\ + Sh_n{}^2 + I/Ih^2 + Ih^2 + Sr_{a2}{}^2 + I/Ir^2 + Ir^2 \\ + Ss_n{}^2 + I/Is^2 + Is^2 + Sspe_n{}^2 + Sope_n{}^2 + Irea^2 \end{array}} \pm PE_n \pm Bias$$

(Eq. 7.1.2-2c)

where:

$TLE_{IND\text{-}EOP(accident)}$ = Total Loop Error for EOP Indication under accident conditions

7.1.2.3 Total PPCS Loop Error (TLE_{PPCS})

Per Figure 6.2-1, the Total Loop Error for the Low Range Containment Pressure PPCS display consists of the following uncertainties:

$$TLE_{PPCS} = \pm\sqrt{\begin{array}{l} Sa^2 + I/Ia^2 + PPCSa^2 + Sd^2 + I/Id^2 + PPCSd^2 \\ + Sm^2 + I/Im^2 + PPCSm^2 + Sv^2 + I/Iv^2 + PPCSv^2 \\ + Sp^2 + I/Ip^2 + PPCSp^2 + St_{n1}{}^2 + I/It^2 + PPCSt^2 \\ + Sh_n{}^2 + I/Ih^2 + PPCSh^2 + Sr_n{}^2 + I/Ir^2 + PPCSr^2 \\ + Ss_n{}^2 + I/Is^2 + PPCSs^2 + Sspe_n{}^2 + Sope_n{}^2 + PPCSrea^2 \end{array}} \pm PE_n \pm Bias$$

(Eq. 7.1.2-3)

7.1.3 As-Found Tolerance Equation Summary

As-Found Tolerances are calculated independently for each of the loop components. The equations shown are adapted from Section 3.3.8.6 of Reference G.1 for use in this calculation.

7.1.3.1 Sensor As-Found Tolerance (SAF)

The acceptable As-Found Tolerance for the Sensor is calculated by the following equation:

$$SAF = \pm \sqrt{Sv^2 + Sd^2 + Sm^2} \qquad \text{(Eq. 7.1.3-1)}$$

where:

Sv = Sensor Tolerance
Sd = Sensor Drift
Sm = Sensor M&TE error

7.1.3.2 Bistable As-Found Tolerance (BAF)

The acceptable As-Found Tolerance for the Bistable is calculated by the following equation:

$$BAF = \pm \sqrt{Bv^2 + Bd^2 + Bm^2} \qquad \text{(Eq. 7.1.3-2)}$$

where:

Bv = Bistable Tolerance
Bd = Bistable Drift
Bm = Bistable M&TE error

7.1.3.3 Current-to-Current Converter As-Found Tolerance (I/IAF)

The acceptable As-Found Tolerance for the I/I Converter is calculated by the following equation:

$$I/IAF = \pm \sqrt{I/Iv^2 + I/Id^2 + I/Im^2} \qquad \text{(Eq. 7.1.3-3)}$$

where:

I/Iv = I/I Converter Setting Tolerance
I/Id = I/I Converter Drift
I/Im = I/I Converter M&TE error

7.1.3.4 Indicator As-Found Tolerance (IAF)

The acceptable As-Found Tolerance for the indicator is calculated by the following equation:

$$IAF = \pm \sqrt{Iv^2 + Id^2 + Im^2} \qquad \text{(Eq. 7.1.3-4)}$$

where:

Iv = Indicator Setting Tolerance
Id = Indicator Drift
Im = Indicator M&TE error

7.1.3.5 PPCS As-Found Tolerance (PPCSAF)

The acceptable As-Found Tolerance for the PPCS is calculated by the following equation:

$$PPCSAF = \pm \sqrt{PPCSv^2 + PPCSd^2 + PPCSm^2} \qquad \text{(Eq. 7.1.3-5)}$$

where:

PPCSv = PPCS Setting Tolerance
PPCSd = PPCS Drift
PPCSm = PPCS M&TE error

7.1.4 As-Left Tolerance Equation Summary

Per Section 3.3.8.6 of Reference G.1, the As-Left Tolerances are calculated independently for both the rack and the sensor.

7.1.4.1 Sensor As-Left Tolerance (SAL)

The As-Left Tolerance for the Sensor is equal to the setting tolerance:

$$SAL = \pm Sv \qquad \text{(Eq. 7.1.4-1)}$$

Where:

Sv = Sensor Setting Tolerance

7.1.4.2 Bistable As-Left Tolerance (BAL)

The As-Left Tolerance for the Bistable is equal to the setting tolerance:

$$BAL = \pm Bv \qquad \text{(Eq. 7.1.4-2)}$$

Where:

Bv = Bistable Setting Tolerance

7.1.4.3 Current-to-Current Converter As-Left Tolerance (I/IAL)

The As-Left Tolerance for the I/I Converter is equal to its setting tolerance:

$$I/IAL = \pm I/Iv \qquad \text{(Eq. 7.1.4-3)}$$

Where:

I/Iv = I/I Converter Setting Tolerance

7.1.4.4 Indicator As-Left Tolerance (IAL)

The As-Left Tolerance for the Indicator is equal to its setting tolerance:

$$IAL = \pm Iv \qquad \text{(Eq. 7.1.4-4)}$$

Where:

Iv = Indicator Setting Tolerance

7.1.4.5 PPCS As-Left Tolerance (PPCSAL)

The As-Left Tolerance for the PPCS is equal to its setting tolerance:

$$PPCSAL = \pm PPCSv \qquad \text{(Eq. 7.1.4-5)}$$

Where:

PPCSv = PPCS Setting Tolerance

7.1.5 Channel Check Tolerance (CCT) Equation Summary

Per Reference G.1, the channel check tolerance (CCT) represents the maximum expected deviation between channel indications that monitor the same plant process parameter. The CCT is determined for instrument loops that require a qualitative assessment of channel behavior during operation. This assessment involves an observed comparison of the channel indication/status.

Per Ref. G.1, Section 3.3.8.7, the CCT is determined by combining the reference accuracy (a), setting tolerance (v), drift (d), and readability (rea) of each device, including the sensor, in the indication loop. A channel check involves a comparison of two indications independent of the number of redundant loops. The channel check tolerance is the combination of these uncertainties for each indication loop, ind_a and ind_b (in % span) using the SRSS method shown below:

$$CCT = \pm \sqrt{\begin{array}{l}(Sa^2 + I/Ia^2 + Ia^2 + Sd^2 + I/Id^2 + Id^2 + Sv^2 + I/Iv^2 \\ + Iv^2 + Irea^2)_{ind\,a} + (Sa^2 + I/Ia^2 + Ia^2 + Sd^2 + I/Id^2 + Id^2 \\ + Sv^2 + I/Iv^2 + Iv^2 + Irea^2)_{ind\,b}\end{array}} \qquad \text{(Eq. 7.1.5-1)}$$

7.1.6 Limiting Trip Setpoint (LTSP) Equation Summary

Per Section 3.3.8.4 of Reference G.1, when a setpoint is approached from one direction and the uncertainties are normally distributed, a reduction factor of 1.645/1.96 = 0.839 may be applied to a 95/95 confidence/probability TLE. Therefore, for a process increasing toward the analytical limit, the calculated Limiting Trip Setpoint is as follows:

$$LTSP\uparrow = AL - (0.839)^* TLE \qquad \text{(Eq. 7.1.6-1)}$$

For a process decreasing from normal operation toward the analytical limit, the calculated Limiting Trip Setpoint is determined as follows:

$$LTSP\downarrow = AL + (0.839)^* TLE \qquad \text{(Eq. 7.1.6-2)}$$

7.1.7 Operability Limit (OL) Equation Summary

Per Section 3.3.8.2 of Reference G.45, the Operability Limit (OL) is defined as a calculated limiting value that the As-Found bistable setpoint is allowed to have during a Technical Specification surveillance Channel Operational Test (COT), beyond which the instrument channel is considered inoperable and corrective action must be taken. Two OLs are calculated, one on each side of the FTSP as-left tolerance band, based on a calculated 3-sigma (3σ) drift value. A channel found drifting beyond its 3σ drift value is considered to be operating abnormally.

Per Section 3.3.8.4 of Reference G.45, the OL on each side of the FTSP is calculated as follows:

$$OL^+ = FTSP + [BAL^2 + Rd_{3\sigma}^2]^{1/2} \qquad \text{(Eq. 7.1.7-1)}$$

$$OL^- = FTSP - [BAL^2 + Rd_{3\sigma}^2]^{1/2} \qquad \text{(Eq. 7.1.7-2)}$$

Where:

the FTSP is expressed in percent of span
OL^+ is the Operability Limit above the FTSP
OL^- is the Operability Limit below the FTSP
BAL is the rack as-left tolerance (typically the bistable tolerance)
$Rd_{3\sigma}$ is the 3σ rack drift value determined as follows:

$$Rd_{3\sigma} = (1.5)\, Rd_{2\sigma} \qquad \text{(Eq. 7.1.7-3)}$$

The rack drift value ($Rd_{2\sigma}$) is the 2-sigma drift value for components checked during the COT, typically the bistable drift.

7.1.8 Scaling

Per Reference G.35, for an instrument with a linear input and output relationship, the output signal can be determined as follows:

$$y - y_1 = m * (x - x_1) \qquad \text{(Eq. 7.1.8-1)}$$

$$m = (y_2 - y_1) / (x_2 - x_1) \qquad \text{(Eq. 7.1.8-2)}$$

$$y = m * (x - x_1) + y_1 \quad \text{(Eq. 7.1.8-3)}$$

Where:

x	= Process value variable, a known input (psig)
x_1	= Process value variable, at 0 % span (psig)
x_2	= Process value variable, at 100 % span (psig)
y	= Analog value variable, an unknown output (mAdc)
y_1	= Analog value at 0 % span (mAdc)
y_2	= Analog value at 100 % span (mAdc)
m	= Slope, or gain of the function, scale factor

7.1.9 Parametric Values

The parametric values are limits for process parameters to validate current limits in operator logs to ensure Tech Spec operating limits are not violated. The parametric values are calculated as follows:

$$\text{Parametric Values} = \pm\,(\text{Tech Spec Limits} - TLE_{IND\text{-}NORM}) \quad \text{(Eq. 7.1.9-1)}$$

Where:

$TLE_{IND\text{-}NORM}$ =The 75/75 value of the Total Loop Error for the indicator loop and/or PPCS loop as required in the Operator Daily Logsheet

7.2 Drift Considerations

The drift values established in References C.1, C.2 and C.3 will be utilized for the transmitters, bistables and indicators.

Use of the aforementioned drift value (as design input to this calculation) is based on justification provided by Engineering Evaluation 2005-0006 (Ref. C.4). This evaluation reviews the station's M&TE and M&TE control programs, based on requirements imposed by the methodology used to prepare instrument setpoint and uncertainty calculations for the station (Ref. G.1). The evaluation concludes that the station's M&TE and M&TE control programs have remained equivalent or improved since the drift calculations were initially prepared, and therefore, renders the drift calculations acceptable for use in current (present-day) calculation revisions performed for the station.

8.0 BODY OF CALCULATION

8.1 Determination of Process Error (PE)

The Low Range Containment Pressure transmitters monitor the containment pressure. There are no known physical or process conditions that would introduce errors into the measurement.

The transmitters are physically located in the Auxiliary Building (see Section 6.4.1). According to FSAR Section 9.5.2 (Ref. G.24), the Auxiliary Building Ventilation System is balanced to maintain the Auxiliary Building at a slightly negative pressure with respect to outside pressure and adjacent building pressure. This pressure gradient is typically less than 1 inwc. As compared to other errors, this error is small and considered negligible. Therefore,

$$\mathbf{PE_n} = \pm \mathbf{0.000\ \%\ span}$$

As stated in Section 6.4.1, the transmitters do not experience environmental effects from postulated accidents (LOCA and HELB). Therefore,

$$\mathbf{PE_a} = \pm \mathbf{0.000\ \%\ span}$$

8.2 Device Uncertainty Analysis

This section will introduce all applicable uncertainties for the devices that comprise the Low Range Containment Pressure Instrument Loop shown in Figure 6.2-1.

From Section 3.3.4.3 of Reference G.1, the drift values calculated from As-Found/As-Left instrument calibration data normally include the error effects under normal conditions of drift, accuracy, power supply, plant vibration, calibration temperature, normal radiation, normal humidity, M&TE used for calibration, and instrument readability. If it is determined that the calibration conditions are indicative of the normal operating conditions, the environmental effects need not be included separately. All device uncertainty terms are considered random and independent unless otherwise noted.

From References P.1 through P.4 and P.13 through P.18, the instruments in the Low Range Containment Pressure Loops are calibrated separately.

8.2.1 Sensor Accuracy (Sa)

Reference C.1 has determined the historical drift values for the Low Range Containment Pressure Transmitters. Per Reference G.1, when drift error values have been statistically derived from As-Found/As-Left calibration data, the Sensor Accuracy of the transmitter is included in the instrument drift value. Therefore,

$$\mathbf{Sa} = \pm \mathbf{0.000\ \%\ span}$$

8.2.2 Sensor Drift (Sd)

Ref. C.1 has determined the historical drift values for the Low Range Containment Pressure Transmitters. Per SR 3.3.2.8 of Technical Specifications

(Ref. G.14) the channel calibration is performed every 22.5 months (18 months plus a 25% allowance). Per Table 8.1 of Reference C.1, the 95% probability/95% confidence Sensor Drift value (the two-year value is conservatively used) is given as ± 0.518 % span with no bias. Therefore,

Sd = ± 0.518 % span **(95/95)**

Bias = ± 0.000 % span

8.2.3 Sensor M&TE (Sm)

Ref. C.1 has determined the historical drift values for the Low Range Containment Pressure Transmitters. Per Reference G.1, when drift error values have been statistically derived from As-Found/As-Left calibration data, the Sensor M&TE effects of the transmitter is included in the instrument drift value. Therefore,

Sm = ± 0.000 % span

8.2.4 Sensor Setting Tolerance (Sv)

Per References P.3 and P.4, and Assumption 5.1.8, the sensor setting tolerance is ± 0.20 mAdc, and the calibrated span is 40 mAdc. Therefore,

Sv = (sensor setting tolerance/calibrated span) * 100%
Sv = (± 0.20 mAdc/40 mAdc) * 100%

Sv = ± 0.500 % span **(95/95)**

8.2.5 Sensor Power Supply Effect (Sp)

Reference C.1 has determined the historical drift values for the Low Range Containment Pressure Transmitters. Per Reference G.1, when drift error values have been statistically derived from As-Found/As-Left calibration data, the Sensor Power Supply Effect of the transmitter is included in the instrument drift value. Therefore,

Sp = ± 0.000 % span

8.2.6 Sensor Temperature Effect (St_n)

From Table 6.3-1, the Low Range Containment Pressure transmitters are Foxboro Model N-E11GM-HIB1-BEL/AEL. Per Reference V.1, the upper span limit of these transmitters is 200 psig. Per References P.3 and P.4, the calibrated span is 60 psig, which is 30% of the upper span limit.

Per Section 6.4.1, the transmitters are evaluated for two different environmental conditions: 65 °F to 104 °F and 65 °F to 120 °F. Reference V.2 specifies a zero shift span error of ± 2.5 % per 100 °F for a calibrated span between 20% and 50% of max span (or upper span limit). Reference V.2 also specifies a span error of ± 1.25 % per 100 °F. These errors are combined using the SRSS method per Reference G.1.

Zero Shift error (St_{-ZERO}) at normal conditions (65 to 104 °F)

St_{-ZERO} = ± (2.5 % span/100 °F) * (104 – 65 °F)
St_{-ZERO} = ± 0.975 % span

Span Shift error (St_{-SPAN}) at normal conditions (65 to 104 °F)

St_{-SPAN} = ± (1.25 % span/100 °F) * (104 – 65 °F)
St_{-SPAN} = ± 0.488 % span

Sensor Temperature Effect at normal conditions (65 to 104 °F) (St_{n1})

St_{n1} = ± $[(St_{-ZERO})^2 + (St_{-SPAN})^2]^{1/2}$
St_{n1} = ± $[(0.975\ \%\ span)^2 + (0.488\ \%\ span)^2]^{1/2}$

St_{n1} = ± 1.090 % span **(95/95)**

Zero Shift error (St_{-ZERO}) at normal conditions (65 to 120 °F)

St_{-ZERO} = ± (2.5 % span/100 °F) * (120 – 65 °F)
St_{-ZERO} = ± 1.375 % span

Span Shift error (St_{-SPAN}) at normal conditions (65 to 120 °F)

St_{-SPAN} = ± (1.25 % span/100 °F) * (120 – 65 °F)
St_{-SPAN} = ± 0.688 % span

Sensor Temperature Effect at normal conditions (65 to 120 °F) (St_{n2})

St_{n2} = ± $[(St_{-ZERO})^2 + (St_{-SPAN})^2]^{1/2}$
St_{n2} = ± $[(1.375\ \%\ span)^2 + (0.688\ \%\ span)^2]^{1/2}$

St_{n2} = ± 1.538 % span **(95/95)**

The highest temperature the instruments would experience for the EOP input function during postulated accidents (LOCA and HELB) is 120 °F (Section 6.4.1). Therefore,

St_{n2} = ± 1.538 % span **(95/95)**

The highest temperature the transmitters would experience for the trip functions (SI, Condensate Isolation, Containment Spray) required during postulated accidents is 104 °F (Section 6.4.1). Therefore,

St_{n1} = ± 1.090 % span **(95/95)**

8.2.7 Sensor Humidity Effect (Sh_n and Sh_a)

Per Section 3.3.3.20 of Reference G.1, changes in ambient humidity have a negligible effect on the uncertainty of the instruments used in this calculation. Therefore,

Sh_n = ± 0.000 % span

Sh_a = ± 0.000 % span

8.2.8 Sensor Radiation Effect (Sr_n and Sr_a)

Reference C.1 has determined the historical drift values for the Low Range Containment Pressure Transmitters. Per Reference G.1, when drift error values have been statistically derived from As-Found/As-Left calibration data, the normal Sensor Radiation Effect of the transmitter is included in the instrument drift value. Therefore,

$$Sr_n = \pm 0.000 \text{ \% span}$$

The transmitters are located in areas of the Auxiliary Building that may experience high radiation with coolant recirculation during a LOCA event (Section 6.4.1). For Containment High Pressure Safety Injection, Condensate Isolation, and High-High Pressure Containment Spray initiation setpoints, the elevated radiation effects are not applicable (Assumptions 5.1.11 and 5.1.12). This effect is also not applicable to the EOP total loop error (TLE) under normal environment conditions. Therefore,

$$Sr_{a1} = \pm 0.000 \text{ \% span}$$

Per References V.1 and V.2, the accident radiation effect of the transmitter with a calibrated span less than the upper span limit is ± 6.0 % span. This effect is applicable to the EOP total loop error (TLE) under accident environment (recirculation) conditions. Therefore,

$$Sr_{a2} = \pm 6.000 \text{ \% span}$$

8.2.9 Sensor Seismic Effect (Ss_n and Ss_a)

Reference C.1 has determined the historical drift values for the Low Range Containment Pressure Transmitters. Per Reference G.1, when drift error values have been statistically derived from As-Found/As-Left calibration data, the effect of normal vibration is included in the instrument drift value. Therefore,

$$Ss_n = \pm 0.000 \text{ \% span}$$

Containment Pressure is not a trip variable included in Table 7.1-1, and hence, seismic effects are not considered for the trip function. Per Section 7.1.E, seismic effects are also not considered for EOP inputs. Furthermore, per Section 3.3.3.10 of Reference G.1, it is assumed that instrumentation will be recalibrated prior to any subsequent accident, thus negating any permanent shift that may have occurred due to the seismic event. Therefore,

$$Ss_a = \pm 0.000 \text{ \% span}$$

8.2.10 Sensor Static Pressure Effect ($Sspe_n$ and $Sspe_a$)

Per Reference G.1, Section 3.3.4.11, static pressure effects due to changes in process pressure only apply to differential pressure instruments in direct contact with the process. Therefore,

$Sspe_n$ = ± 0.000 % span

$Sspe_a$ = ± 0.000 % span

8.2.11 Sensor Overpressure Effect ($Sope_n$ and $Sope_a$)

The Low Range Containment transmitters are rated for a maximum over-range pressure of 350 psig (Ref. V.1), which is well above the containment design pressure (accident) of 60 psig (Ref. G.39). Therefore, the sensor overpressure effect is considered negligible.

$Sope_n$ = ± 0.000 % span

$Sope_a$ = ± 0.000 % span

8.2.12 Bistable Accuracy (Ba)

Reference C.2 has determined the historical drift values for Foxboro Model 63U-BC bistables. Per Reference G.1, when drift error values have been statistically derived from As-Found/As-Left calibration data, the Accuracy of the bistable is included in the instrument drift value. Therefore,

Ba = ± 0.000 % span

8.2.13 Bistable Drift (Bd)

Reference C.2 has determined the historical drift values for Foxboro Model 63U-BC bistables. Per References P.13 through P.18, the containment pressure bistables are calibrated every 92 days or quarterly. Per Table 8.2 of Reference C.2, the quarterly 95% probability/95% confidence Bistable Drift value is ±0.212 % span with no bias. Therefore,

Bd = ± 0.212% span

Bias = ± 0.000 % span

8.2.14 Bistable M&TE Effect (Bm)

Reference C.2 has determined the historical drift values for Foxboro Model 63U-BC bistables. Per Reference G.1, when drift error values have been statistically derived from As-Found/As-Left calibration data, the M&TE Effect of the bistable is included in the instrument drift value. Therefore,

Bm = ± 0.000 % span

8.2.15 Bistable Setting Tolerance (Bv)

Per References P.13 through P.18, the bistable setting tolerance is +0/- 0.002 VDC and the calibrated span is 0.4 VDC. Per Assumption 5.1.8, this value is a symmetrical ± 0.002 Vdc ((Note, the signal is in Vdc due to a 10 Ω resistor connected across the calibration point per Ref. D.12 through D.17). Therefore,

Bv = (bistable setting tolerance/calibrated span) * 100%
Bv = (± 0.002 VDC/0.4 VDC) * 100%
Bv = ± 0.500 % span

Per Assumption 5.1.8, the existing setting tolerance is reduced by 0.25 % span. Therefore,

Bv = ± (0.500 % span – 0.250 % span)

Bv = ± 0.250 % span

8.2.16 Bistable Power Supply Effect (Bp)

Reference C.2 has determined the historical drift values for Foxboro Model 63U-BC bistables. Per Reference G.1, when drift error values have been statistically derived from As-Found/As-Left calibration data, the Power Supply Effect of the bistable is included in the instrument drift value. Therefore,

Bp = ± 0.000 % span

8.2.17 Bistable Temperature Effect (Bt)

Per Section 6.4.2, the bistables are rack components located in the Control Room, which has a worst-case ambient temperature between 65 °F and 120 °F. From vendor information (Ref. V.3), the bistables have a normal operating range of +40°F to +120 °F with no associated temperature effect. Therefore,

Bt = ± 0.000 % span

8.2.18 Bistable Humidity Effect (Bh)

Per Section 3.3.3.20 of Reference G.1, changes in ambient humidity have a negligible effect on the uncertainty of the instruments used in this calculation. Therefore,

Bh = ± 0.000 % span

8.2.19 Bistable Radiation Effect (Br)

Per Section 6.4.2, the bistables are rack components located in the Computer Room, which is a radiologically mild environment. Reference C.2 has determined the historical drift values for Foxboro Model 63U-BC bistables. Per Reference G.1, when drift error values have been statistically derived from As-Found/As-Left calibration data, the Radiation Effect of the bistable is included in the instrument drift value. Therefore,

Br = ± 0.000 % span

8.2.20 Bistable Seismic Effect (Bs)

There is no seismic effect provided by the vendor for the bistables (Ref. V.3). Per Section 3.3.4.10 of Reference G.1, the effects of seismic or vibration events for non-mechanical instrumentation are considered zero unless vendor or industry experience indicates otherwise. Therefore,

Bs = ± 0.000 % span

8.2.21 Current-to-Current Converter Accuracy (I/Ia)

Per Reference V.5, the accuracy of the I/I Converter is ± 0.5 % span. Therefore,

I/Ia = ± 0.500 % span

8.2.22 Current-to-Current Converter Drift (I/Id)

Reference V.5 does not provide a drift specification for the I/I Converter. Per Section 3.3.3.15 of Reference G.1, when drift is not specified by the vendor, the accuracy of the component is used as the drift for the entire calibration period. Therefore,

I/Id = ± 0.500 % span

8.2.23 Current-to-Current Converter M&TE Effect (I/Im)

Per References P.1 and P.2, the I/I Converters are calibrated using a multimeter appropriate for 0.1-0.5 Vdc at the Converter input (a 10 Ω dropping resistor is connected at the input test point per Ref. D.12 through D.17), and a multimeter appropriate for 10-50 mAdc at the output. The M&TE effect is due to the multimeters used at the I/I Converter input and output. According to calibration procedure ICI 12 (Ref. P.19), the following M&TE are capable of performing this measurement.

<u>Fluke 45, fast rate (5 digit display, 100 mAdc range) - Output</u>

RA_{mte} = uncertainty * calibrated span
RA_{mte} = ± 0.05% reading * 50 mAdc
RA_{mte} = ± 0.025 mAdc
RA_{std} = 0
RD_{mte} = ± 3 DGTS * 0.001 mAdc
RD_{mte} = ± 0.003 mAdc

From Section 3.3.4.4 of Reference G.1, M&TE uncertainty is calculated using the following equation:

$$m = \pm\sqrt{RA^2_{mte} + RA^2_{std} + RD^2_{mte}}$$

$$m_{45} = \pm\sqrt{0.025^2 + 0^2 + 0.003^2} = \pm 0.025 \text{ mAdc}$$

HP 34401A multimeter (6.5 digit display, 100 mAdc range) (Ref. V.11) - Output:

RA_{mte} = ± (0.050 % reading + 0.005 % range)
RA_{mte} = ± [0.050 % (50 mAdc) + 0.005 % (100 mAdc)]
RA_{mte} = ± 0.030 mAdc
RA_{std} = 0
RD_{mte} = ± 0.0001 mAdc

From Section 3.3.4.4 of Reference G.1, M&TE uncertainty is calculated using the following equation:

$$m = \pm\sqrt{RA^2_{mte} + RA^2_{std} + RD^2_{mte}}$$

$$m_{HP} = \pm\sqrt{0.030^2 + 0^2 + 0.0001^2} = \pm 0.030 \text{ mAdc}$$

The uncertainty of HP 34401A (m_{HP} = ± 0.030 mAdc) is used as the bounding output M&TE because it is the less accurate of the two M&TE.

Converting to % span,

m_{HP} = ± (0.030 mAdc / 40 mAdc) * 100 % span

m_{HP} = ± 0.075 % span

HP 34401A multimeter (6.5 digit display, 1.0 Vdc range) (Ref. V.11) – Input

RA_{mte} = ± (0.0040 % reading + 0.0007 % range)
RA_{mte} = ± [0.0040 % (0.5 Vdc) + 0.0007 % (1.0 Vdc)]
RA_{mte} = ± 0.000027 Vdc
RA_{std} = 0
RD_{mte} = ± 0.000001 Vdc

From Section 3.3.4.4 of Reference G.1, M&TE uncertainty is calculated using the following equation:

$$m = \pm\sqrt{RA^2_{mte} + RA^2_{std} + RD^2_{mte}}$$

$$m_{HP} = \pm\sqrt{0.000027^2 + 0^2 + 0.000001^2} = \pm 0.000027 \text{ Vdc}$$

Fluke 45 multimeter (5 digit display, 3.0 Vdc range) – Input

RA_{mte} = uncertainty * max reading
RA_{mte} = ± 0.025% reading * 0.5 Vdc
RA_{mte} = ± 0.000125 Vdc
RA_{std} = 0
RD_{mte} = ± 2 DGTS * 0.0001 Vdc
RD_{mte} = ± 0.0002 Vdc

From Section 3.3.4.4 of Reference G.1, M&TE uncertainty is calculated using the following equation:

$$m = \pm\sqrt{RA^2_{mte} + RA^2_{std} + RD^2_{mte}}$$

$$m_{45} = \pm\sqrt{0.000125^2 + 0^2 + 0.0002^2} = \pm 0.000236 \text{ Vdc}$$

<u>Fluke 8842A multimeter (6.5 digit display, 2.0 Vdc range) – Input</u>

RA_{mte} = uncertainty * max reading
RA_{mte} = ± 0.003% reading * 0.5 Vdc
RA_{mte} = ± 0.000015 Vdc
RA_{std} = 0
RD_{mte} = ± 2 DGTS * 0.00001 Vdc
RD_{mte} = ± 0.00002 Vdc

From Section 3.3.4.4 of Reference G.1, M&TE uncertainty is calculated using the following equation:

$$m = \pm\sqrt{RA^2_{mte} + RA^2_{std} + RD^2_{mte}}$$

$$m_{8842} = \pm\sqrt{0.000015^2 + 0^2 + 0.00002^2} = \pm 0.000025 \text{ Vdc}$$

The uncertainty of Fluke 45 (m_{45} = ± 0.000236 Vdc) is used as the bounding input M&TE because it is the less accurate of the two M&TE.

Converting to % span,

m_{45} = ± (0.000236 Vdc / 0.4 Vdc) * 100 % span

m_{45} = ± 0.059 % span

The total M&TE uncertainty for the calibration of the I/I Converter is calculated using the multiple M&TE equation given in Section 3.3.4.4 of Reference G.1:

$$M = \pm\sqrt{m_1^2 + m_2^2 + \ldots m_n^2}$$

$$I/Im = \pm\sqrt{m_{45}^2 + m_{HP}^2}$$

$$I/Im = \pm\sqrt{0.059^2 + 0.075^2}$$

I/Im = ± 0.095 % span

8.2.24 Current-to-Current Converter Setting Tolerance (I/Iv)

Per References P.1 and P.2, and Assumption 5.1.8, the setting tolerance of the I/I Converter is ± 0.2 mAdc, and the calibrated span is 40 mAdc. Therefore,

I/Iv = ± (setting tolerance / calibrated span) * 100%
I/Iv = ± (0.2 mAdc / 40 mAdc) * 100%
I/Iv = ± 0.500 % span

Per Assumption 5.1.8, the existing setting tolerance is reduced by 0.25 % span. Therefore,

I/Iv = ± (0.500 % span – 0.250 % span)

I/Iv = ± 0.250 % span

8.2.25 Current-to-Current Converter Power Supply Effect (I/Ip)

From Reference G.8, the I/I Converter has been shown to experience a random power supply effect caused by the non-regulated portion of the internal 50-volt power supply. This primarily affects only the I/I converters or isolators. Therefore, per Assumption 5.1.5,

I/Ip = ± 1.000 % span

8.2.26 Current-to-Current Converter Temperature Effect (I/It)

Per Section 6.4.2, the I/I Converter is located in the Computer Room, which has a worst-case ambient temperature range of 65 °F to 120 °F. From vendor information (Ref. V.5), the I/I Converter has a normal operating range of +40°F to +120 °F with no associated temperature effect. Therefore, the temperature effect is considered negligible.

I/It = ± 0.000 % span

8.2.27 Current-to-Current Converter Humidity Effect (I/Ih)

Per Section 3.3.3.20 of Reference G.1, changes in ambient humidity have a negligible effect on the uncertainty of the instruments used in this calculation. Therefore,

I/Ih = ± 0.000 % span

8.2.28 Current-to-Current Converter Radiation Effect (I/Ir)

As stated in Section 6.4.2, the I/I Converter is located in the Computer Room, which has a mild radiological environment under all plant conditions. Per Section 3.3.3.21 of Reference G.1, radiation errors are considered to be included in the drift error. Therefore,

I/Ir = ± 0.000 % span

8.2.29 Current-to-Current Converter Seismic Effect (I/Is)

There is no seismic effect provided by the vendor for the I/I Converter (Ref. V.5). Per Section 3.3.4.10 of Reference G.1, the effects of seismic or vibration events for non-mechanical instrumentation are considered zero unless vendor or industry experience indicates otherwise. Therefore,

I/Is = ± 0.000 % span

8.2.30 Indicator Accuracy (Ia)

Reference C.3 has determined the historical drift values for the indicator. Per Ref. G.1, when drift error values have been statistically derived from As-Found/As-Left calibration data, the Accuracy of the indicator is included in the drift value. Therefore,

Ia = ± 0.000 % span

8.2.31 Indicator Drift (Id)

Per References P.1 and P.2, the Low Range Pressure Indicators are Westinghouse HX-252 switchboard indicators. Reference C.3 is the As-Found/As-Left drift analysis for Westinghouse HX-252 indicators. Although the drift analysis performed in Reference C.3 does not include the As-Found/As-Left data for the Low Containment Pressure indicators, the 95%/95% drift value calculated therein is considered representative of the Westinghouse HX-252 indicators experienced at PBNP, and therefore, is used to represent the drift of the Low Containment Pressure indicators. Since the Low Containment Pressure indicators are calibrated every 18 months (Ref. P.1 and P.2), the 100%, 2-year 95%/95% drift value of ± 1.028 % span with no bias from Table 8.2 of Reference C.3 is conservatively used. Therefore,

Id = ± 1.028 % span

Bias = ± 0.000 % span

8.2.32 Indicator M&TE Effect (Im)

Reference C.3 has determined the historical drift values for the indicator. Per Reference G.1, when drift error values have been statistically derived from As-Found/As-Left calibration data, the M&TE Effect of the indicator is included in the drift value. Therefore,

Im = ± 0.000 % span

8.2.33 Indicator Setting Tolerance (Iv)

Per References P.1 and P.2, and Assumption 5.1.8, the setting tolerance is ± 0.8 mA, and the calibrated span is 40 mA. Therefore,

Iv = ± (setting tolerance / calibrated span) * 100%

Iv = ± (0.8 mA / 40 mA) * 100%
Iv = ± 2.000 % span

Per Assumption 5.1.8, the existing setting tolerance is reduced by 0.25 % span. Therefore,

Iv = ± (2.000 % span – 0.250 % span)

Iv = ± 1.750 % span

8.2.34 Indicator Power Supply Effect (Ip)

Reference C.3 has determined the historical drift values for the indicator. Per Reference G.1, when drift error values have been statistically derived from As-Found/As-Left calibration data, the Power Supply Effect of the indicator is included in the drift value. Therefore,

Ip = ± 0.000 % span

8.2.35 Indicator Temperature Effect (It)

Per Section 6.4.2, the indicators are located in the Control Room, which has a worst-case ambient temperature between 65 °F to 120 °F. From vendor information (Ref. V.4), the indicators have a normal operating range of +40°F to +120 °F. Per Reference G.37, the temperature effect is included in the drift value. Therefore,

It = ± 0.000 % span

8.2.36 Indicator Humidity Effect (Ih)

Per Section 3.3.3.20 of Reference G.1, changes in ambient humidity have a negligible effect on the uncertainty of the instruments used in this calculation. Therefore,

Ih = ± 0.000 % span

8.2.37 Indicator Radiation Effect (Ir)

Per Section 6.4.2, the indicators are located in the Control Room, which is a radiologically mild environment. Reference C.3 has determined the historical drift values for the indicator. Per Reference G.1, when drift error values have been statistically derived from As-Found/As-Left calibration data, the Radiation Effect of the indicator is included in the drift value. Therefore,

Ir = ± 0.000 % span

8.2.38 Indicator Seismic Effect (Is)

There is no seismic effect provided by the vendor for the indicators (Ref. V.4). Vendor information also shows that the indicators are seismically qualified with no additional seismic effect specified. Therefore,

Is = ± 0.000 % span

8.2.39 Indicator Readability Effect (Irea)

Reference C.3 has determined the historical drift values for the indicator. Per Reference G.1, when drift error values have been statistically derived from As-Found/As-Left calibration data, the Readability Effect of the indicator is included in the drift value. Therefore,

Irea = ± 0.000 % span

8.2.40 PPCS Accuracy (PPCSa)

Per Assumption 5.1.7, the PPCS accuracy is ± 0.510% span. Therefore,

PPCSa = ± 0.510% span

8.2.41 PPCS Drift (PPCSd)

Per Assumption 5.1.7, the drift for the PPCS is included in the accuracy term. Therefore,

PPCSd = ± 0.000% span

8.2.42 PPCS M&TE Effect (PPCSm)

Per References P.1 and P.2, the Low Range Containment Pressure PPCS display is calibrated using a multimeter appropriate for 10-50 mAdc at the PPCS input and reading the PPCS display at the output (the readability effect is accounted for in Section 8.2.49). The M&TE effect is due to the multimeter used at the PPCS input. According to calibration procedure ICI 12 (Ref. P.19), the following M&TE are capable of performing this measurement.

<u>Fluke 45 multimeter (fast resolution, 5 digit display, 100 mAdc range):</u>

RA_{mte} = uncertainty * max reading
RA_{mte} = ±0.05% reading * 50 mAdc
RA_{mte} = ±0.025 mAdc
RA_{std} = 0
RD_{mte} = ± 3 DGTS * 0.001 mAdc
RD_{mte} = ± 0.003 mAdc

From Section 3.3.4.4 of Reference G.1, M&TE uncertainty is calculated using the following equation:

$$m = \pm\sqrt{RA^2_{mte} + RA^2_{std} + RD^2_{mte}}$$

$$m_{45} = \pm\sqrt{0.025^2 + 0^2 + 0.003^2} \quad \pm 0.025 \text{ mAdc}$$

<u>HP 34401A multimeter (6.5 digit display, 100 mAdc range) (Ref. V.11)</u>

RA_{mte} = ± (0.050 % reading + 0.005 % range)
RA_{mte} = ± [0.050 % (50 mAdc) + 0.005 % (100 mAdc)]
RA_{mte} = ± 0.030 mAdc
RA_{std} = 0
RD_{mte} = ± 0.0001 mAdc

From Section 3.3.4.4 of Reference G.1, M&TE uncertainty is calculated using the following equation:

$$m = \pm\sqrt{RA^2_{mte} + RA^2_{std} + RD^2_{mte}}$$

$$m_{HP} = \pm\sqrt{0.030^2 + 0^2 + 0.0001^2} = \pm 0.030 \text{ mAdc}$$

The uncertainty of HP 34401A (m_{HP} = ± 0.030 mAdc) is used as the bounding input M&TE because it is the less accurate of the two M&TE.

Converting to % span,

m_{HP} = ± (0.030 mAdc / 40 mAdc) * 100 % span

m_{HP} = ± 0.075 % span

Therefore, the M&TE uncertainty for the calibration of the PPCS is:

PPCSm = ± 0.075 % span

8.2.43 PPCS Setting Tolerance (PPCSv)

Per Reference P.1 and P.2, and Assumption 5.1.8, the setting tolerance is ± 0.3 psig, and the calibrated span is 60 psig. Therefore,

PPCSv = ± (setting tolerance / calibrated span) * 100%
PPCSv = ± (0.3 psig / 60 psig) * 100% span

PPCSv = ± 0.500 % span

8.2.44 PPCS Power Supply Effect (PPCSp)

Per Assumption 5.1.7, the power supply effect for the PPCS is included in the accuracy term. Therefore,

PPCSp = ± 0.000 % span

8.2.45 PPCS Temperature Effect (PPCSt)

Per Assumption 5.1.7, the temperature effect for the PPCS is included in the accuracy term. Therefore,

PPCSt = ± 0.000 % span

8.2.46 PPCS Humidity Effect (PPCSh)

Per Assumption 5.1.7, the humidity effect for the PPCS is included in the accuracy term. Therefore,

PPCSh = ± 0.000 % span

8.2.47 PPCS Radiation Effect (PPCSr)

Per Assumption 5.1.7, the radiation effect for the PPCS is included in the accuracy term. Therefore,

PPCSr = ± 0.000 % span

8.2.48 PPCS Seismic Effect (PPCSs)

Per Assumption 5.1.7, the seismic effect for the PPCS is included in the accuracy term. Therefore,

PPCSs = ± 0.000 % span

8.2.49 PPCS Readability Effect (PPCSrea)

Per Reference P.1 and P.2, the PPCS display has 2 decimal places and the span is 60 psig. Per Reference G.1, Section 3.3.5.3, the readability error for a digital display is the least significant digit. Therefore,

PPCSrea = ± (reading error / calibrated span) * 100%
PPCSrea = ± (0.01 psig / 60 psig) * 100%

PPCSrea = ± 0.017 % span

8.3 Device Uncertainty Summary

8.3.1 Sensor Uncertainties

Parameter	Uncertainty (% span) (95/95)		Reference Section
	Normal Conditions	Accident Conditions	
Sensor Accuracy (Sa)	± 0.000 % span	± 0.000 % span	8.2.1
Sensor Drift (Sd) (Bias)	± 0.518 % span ± 0.000 % span	± 0.518 % span ± 0.000 % span	8.2.2
Sensor M&TE Effect (Sm)	± 0.000 % span	± 0.000 % span	8.2.3
Sensor Setting Tolerance (Sv)	± 0.500 % span	± 0.500 % span	8.2.4
Sensor Power Supply Effect (Sp)	± 0.000 % span	± 0.000 % span	8.2.5
Sensor Temperature Effect (St)	± 1.090 % span (St_{n1}) ± 1.538 % span (St_{n2})	± 1.090 % span (St_{n1}) ± 1.538 % span(EOP)	8.2.6
Sensor Humidity Effect (Sh)	± 0.000 % span	± 0.000 % span	8.2.7
Sensor Radiation Effect (Sr)	± 0.000 % span	± 0.000 % span (Sr_a) ± 6.000 % span (Sr_{a2})	8.2.8
Sensor Seismic Effect (Ss)	± 0.000 % span	± 0.000 % span	8.2.9

Sensor Static Pressure Effect (Sspe))	± 0.000 % span	± 0.000 % span	8.2.10
Sensor Overpressure Effect (Sope)	± 0.000 % span	± 0.000 % span	8.2.11

8.3.2 Bistable Uncertainties

Parameter	Uncertainty (% span) (95/95)		Reference Section
	Normal Conditions	Accident Conditions	
Bistable Accuracy (Ba)	± 0.000 % span	± 0.000 % span	8.2.12
Bistable Drift (Bd) (Bias)	± 0.212 % span ± 0.000 % span	± 0.212 % span ± 0.000 % span	8.2.13
Bistable M&TE Effect (Bm)	± 0.000 % span	± 0.000 % span	8.2.14
Bistable Setting Tolerance (Bv)	± 0.250 % span	± 0.250 % span	8.2.15
Bistable Power Supply Effect (Bp)	± 0.000 % span	± 0.000 % span	8.2.16
Bistable Temperature Effect (Bt)	± 0.000 % span	± 0.000 % span	8.2.17
Bistable Humidity Effect (Bh)	± 0.000 % span	± 0.000 % span	8.2.18
Bistable Radiation Effect (Br)	± 0.000 % span	± 0.000 % span	8.2.19
Bistable Seismic Effect (Bs)	± 0.000 % span	± 0.000 % span	8.2.20

8.3.3 Current-to-Current Converter Uncertainties

Parameter	Uncertainty (% span) (95/95)		Reference Section
	Normal Conditions	Accident Conditions	
Current-to-Current Converter Accuracy (I/Ia)	± 0.500 % span	± 0.500 % span	8.2.21
Current-to-Current Converter Drift (I/Id)	± 0.500 % span	± 0.500 % span	8.2.22
Current-to-Current Converter M&TE Effect (I/Im)	± 0.095 % span	± 0.095 % span	8.2.23
Current-to-Current Converter Setting Tolerance (I/Iv)	± 0.250 % span	± 0.250 % span	8.2.24
Current-to-Current Converter Power Supply Effect (I/Ip)	± 1.000 % span	± 1.000 % span	8.2.25
Current-to-Current Converter Temperature Effect (I/It)	± 0.000 % span	± 0.000 % span	8.2.26
Current-to-Current Converter Humidity Effect (I/Ih)	± 0.000 % span	± 0.000 % span	8.2.27
Current-to-Current Converter Radiation Effect (I/Ir)	± 0.000 % span	± 0.000 % span	8.2.28
Current-to-Current Converter Seismic Effect (I/Is)	± 0.000 % span	± 0.000 % span	8.2.29

8.3.4 Indicator Uncertainties

Parameter	Uncertainty (% span) (95/95)		Reference Section
	Normal Conditions	Accident Conditions	
Indicator Accuracy (Ia)	± 0.000 % span	± 0.000 % span	8.2.30
Indicator Drift (Id) (Bias)	± 1.028 % span ± 0.000 % span	± 1.028 % span ± 0.000 % span	8.2.31
Indicator M&TE Effect (Im)	± 0.000 % span	± 0.000 % span	8.2.32
Indicator Setting Tolerance (Iv)	± 1.750 % span	± 1.750 % span	8.2.33
Indicator Power Supply Effect (Ip)	± 0.000 % span	± 0.000 % span	8.2.34
Indicator Temperature Effect (It)	± 0.000 % span	± 0.000 % span	8.2.35
Indicator Humidity Effect (Ih)	± 0.000 % span	± 0.000 % span	8.2.36
Indicator Radiation Effect (Ir)	± 0.000 % span	± 0.000 % span	8.2.37
Indicator Seismic Effect (Is)	± 0.000 % span	± 0.000 % span	8.2.38
Indicator Readability Effect (Irea)	± 0.000 % span	± 0.000 % span	8.2.39

8.3.5 PPCS Uncertainties

Parameter	Uncertainty (% span) (95/95)		Reference Section
	Normal Conditions	Accident Conditions	
PPCS Accuracy (PPCSa)	± 0.510 % span	± 0.510 % span	8.2.40
PPCS Drift (PPCSd)	± 0.000 % span	± 0.000 % span	8.2.41
PPCS M&TE Effect (PPCSm)	± 0.075 % span	± 0.075 % span	8.2.42
PPCS Setting Tolerance (PPCSv)	± 0.500 % span	± 0.500 % span	8.2.43
PPCS Power Supply Effect (PPCSp)	± 0.000 % span	± 0.000 % span	8.2.44
PPCS Temperature Effect (PPCSt)	± 0.000 % span	± 0.000 % span	8.2.45
PPCS Humidity Effect (PPCSh)	± 0.000 % span	± 0.000 % span	8.2.46
PPCS Radiation Effect (PPCSr)	± 0.000 % span	± 0.000 % span	8.2.47
PPCS Seismic Effect (PPCSs)	± 0.000 % span	± 0.000 % span	8.2.48
PPCS Readability Effect (PPCSrea)	± 0.017 % span	± 0.017 % span	8.2.49

8.3.6 Process Considerations

Parameter	Uncertainty (% span) (95/95) Normal Conditions	Accident Conditions	Reference Section
Process Error (PE)	± 0.000 % span	± 0.000 % span	8.1

8.4 Total Loop Errors

8.4.1 Total Trip Loop Error (TLE_{TRIP})

As stated in Section 7.1.1 of this calculation, Containment High and High-High Trip Setpoints are Category A functions and are combined into a 95/95 total loop error. Applicable uncertainties are listed in Section 8.2 and summarized in Section 8.3.

Using Equation 7.1.2-1, the Total Trip Loop Error (TLE_{TRIP}) for the Low Range Containment High Pressure SI / Condensate Isolation and High-High Pressure Containment Spray actuation is determined as follows:

$$TLE_{TRIP} = \pm\sqrt{\begin{array}{l} Sa^2 + Ba^2 + Sd^2 + Bd^2 + Sm^2 + Bm^2 \\ + Sv^2 + Bv^2 + Sp^2 + Bp^2 + St_{nl}{}^2 + Bt^2 \\ + Sh_a{}^2 + Bh^2 + Sr_a{}^2 + Br^2 + Ss_a{}^2 + Bs^2 \\ + Sspe_a{}^2 + Sope_a{}^2 \end{array}} \pm PE_a \pm Bias$$

Substituting for the Total Trip Loop Error (TLE_{TRIP}) for Low Range Containment High Pressure SI / Condensate Isolation and High-High Pressure Containment Spray actuation:

$$TLE_{TRIP} = \pm\sqrt{\begin{array}{l} 0^2 + 0^2 + 0.518^2 + 0.212^2 + 0^2 + 0^2 \\ + 0.500^2 + 0.250^2 + 0^2 + 0^2 + 1.090^2 + 0^2 \\ + 0^2 + 0^2 + 0^2 + 0^2 + 0^2 + 0^2 + 0^2 + 0^2 \end{array}} + 0 + 0$$

TLE_{TRIP} = ± 1.347 % span **(95/95)**

Per References P.3 and P.4, the calibrated span in engineering units is 60 psi. Converting the Total Trip Loop Error (TLE_{TRIP}) for Low Range Containment High Pressure SI / Condensate Isolation and High-High Pressure Containment Spray actuation to process units gives,

TLE_{TRIP} = ± (1.347 % span) * (60 psi) / 100%

TLE_{TRIP} = ± 0.808 psi **(95/95)**

8.4.2 Total Indicator Loop Error ($TLE_{IND\text{-}EOP}$) for EOP Input

As stated in Section 7.1.1 of this calculation, Low Range Containment Pressure control room indication for EOP operator action has both Category A and C functions and is combined into 95/95 and 75/75 total loop errors. Applicable uncertainties are listed in Section 8.2 and summarized in Section 8.3.

Using Equation 7.1.2-2b, the Total Loop Error for EOP Indication under normal environmental conditions ($TLE_{IND\text{-}EOP(normal)}$) is determined as follows:

$$TLE_{IND\text{-}EOP(normal)} = \pm\sqrt{\begin{array}{l} Sa^2 + I/Ia^2 + Ia^2 + Sd^2 + I/Id^2 + Id^2 \\ + Sm^2 + I/Im^2 + Im^2 + Sv^2 + I/Iv^2 + Iv^2 \\ + Sp^2 + I/Ip^2 + Ip^2 + St_{n2}{}^2 + I/It^2 + It^2 \\ + Sh_n{}^2 + I/Ih^2 + Ih^2 + Sr_{a1}{}^2 + I/Ir^2 + Ir^2 \\ + Ss_n{}^2 + I/Is^2 + Is^2 + Sspe_n{}^2 + Sope_n{}^2 + Irea^2 \end{array}} \pm PE_n \pm Bias$$

Substituting for the Total Loop Error for EOP Indication ($TLE_{IND\text{-}EOP(normal)}$):

$$TLE_{IND\text{-}EOP(normal)} = \pm\sqrt{\begin{array}{l} 0^2 + 0.500^2 + 0^2 + 0.518^2 + 0.500^2 + 1.028^2 \\ + 0^2 + 0.095^2 + 0^2 + 0.500^2 + 0.250^2 + 1.750^2 \\ + 0^2 + 1.000^2 + 0^2 + 1.538^2 + 0^2 + 0^2 \\ + 0^2 + 0^2 + 0^2 + 0^2 + 0^2 + 0^2 \\ + 0^2 + 0^2 + 0^2 + 0^2 + 0^2 + 0^2 \end{array}} + 0 + 0$$

$$\mathbf{TLE_{IND\text{-}EOP(normal)} = \pm\ 2.928\ \%\ span} \qquad \textbf{(95/95)}$$

Per Reference P.3 and P.4, the calibrated span in engineering units is 60 psi. Converting the 95/95 Total Loop Error for EOP Indication ($TLE_{IND\text{-}EOP}$) to process units gives,

$$TLE_{IND\text{-}EOP(normal)} = \pm\ (2.928\ \%\ span) * (60\ psi) / 100\%$$

$$\mathbf{TLE_{IND\text{-}EOP(normal)} = \pm\ 1.757\ psi} \qquad \textbf{(95/95)}$$

Per Section 3.3.3.13 of Reference G.1, the Total Loop Error for EOP Indication ($TLE_{IND\text{-}EOP}$) is converted from 95/95 to 75/75 statistics as follows:

$$TLE_{IND\text{-}EOP(normal)} = \pm\ 2.928\ \%\ span * (1.15/1.96)$$

$$\mathbf{TLE_{IND\text{-}EOP(normal)} = \pm\ 1.718\ \%\ span} \qquad \textbf{(75/75)}$$

Per Reference P.3 and P.4, the calibrated span in engineering units is 60 psi. Converting the 75/75 Total Loop Error for EOP Indication ($TLE_{IND\text{-}EOP}$) to process units gives,

$TLE_{IND\text{-}EOP(normal)} = \pm (1.718\ \%\ span) * (60\ psi) / 100\%$

$\mathbf{TLE_{IND\text{-}EOP(normal)} = \pm\ 1.031\ psi}$ **(75/75)**

Using Equation 7.1.2-2c, the Total Loop Error for EOP Indication under accident environmental conditions ($TLE_{IND\text{-}EOP(accident)}$) is determined as follows:

$$TLE_{IND\text{-}EOP(accident)} = \pm \sqrt{\begin{array}{l} Sa^2 + I/Ia^2 + Ia^2 + Sd^2 + I/Id^2 + Id^2 \\ + Sm^2 + I/Im^2 + Im^2 + Sv^2 + I/Iv^2 + Iv^2 \\ + Sp^2 + I/Ip^2 + Ip^2 + St_{n2}{}^2 + I/It^2 + It^2 \\ + Sh_n{}^2 + I/Ih^2 + Ih^2 + Sr_{a2}{}^2 + I/Ir^2 + Ir^2 \\ + Ss_n{}^2 + I/Is^2 + Is^2 + Sspe_n{}^2 + Sope_n{}^2 + Irea^2 \end{array}} \pm PE_n \pm Bias$$

Substituting for the Total Loop Error for EOP Indication ($TLE_{IND\text{-}EOP(accident)}$):

$$TLE_{IND\text{-}EOP(accident)} = \pm \sqrt{\begin{array}{l} 0^2 + 0.500^2 + 0^2 + 0.518^2 + 0.500^2 + 1.028^2 \\ + 0^2 + 0.095^2 + 0^2 + 0.500^2 + 0.250^2 + 1.750^2 \\ + 0^2 + 1.000^2 + 0^2 + 1.538^2 + 0^2 + 0^2 \\ + 0^2 + 0^2 + 0^2 + 0^2 + 6.000^2 + 0^2 \\ + 0^2 + 0^2 + 0^2 + 0^2 + 0^2 + 0^2 \end{array}} + 0 + 0$$

$\mathbf{TLE_{IND\text{-}EOP(accident)} = \pm\ 6.676\ \%\ span}$ **(95/95)**

Per Reference P.3 and P.4, the calibrated span in engineering units is 60 psi. Converting the 95/95 Total Loop Error for EOP Indication ($TLE_{IND\text{-}EOP}$) to process units gives,

$TLE_{IND\text{-}EOP(accident)} = \pm (6.676\ \%\ span) * (60\ psi) / 100\%$

$\mathbf{TLE_{IND\text{-}EOP(accident)} = \pm\ 4.006\ psi}$ **(95/95)**

Per Section 3.3.3.13 of Reference G.1, the Total Loop Error for EOP Indication ($TLE_{IND\text{-}EOP}$) is converted from 95/95 to 75/75 statistics as follows:

$TLE_{IND\text{-}EOP(accident)} = \pm\ 6.676\ \%\ span * (1.15/1.96)$

$\mathbf{TLE_{IND\text{-}EOP(accident)} = \pm\ 3.917\ \%\ span}$ **(75/75)**

Per Reference P.3 and P.4, the calibrated span in engineering units is 60 psi. Converting the 75/75 Total Loop Error for EOP Indication ($TLE_{IND\text{-}EOP}$) to process units gives,

$TLE_{IND\text{-}EOP(accident)} = \pm (3.917\ \%\ span) * (60\ psi) / 100\%$

$$\mathbf{TLE_{IND\text{-}EOP(accident)} = \pm\ 2.350\ psi} \qquad \mathbf{(75/75)}$$

8.4.3 Total Normal Indicator Loop Error ($TLE_{IND\text{-}NORM}$)

As stated in Section 6.4 of this calculation, Low Range Containment Pressure control room indication is associated with a parametric value, classified as a Category B function, and is combined into a 75/75 total loop error. Applicable uncertainties are listed in Section 8.2 and summarized in Section 8.3.

Per Section 6.4, routine surveillance of the indicator loop associated with a parametric value is performed only during normal operating conditions. Using Equation 7.1.2-2a, the Total Normal Indicator Loop Error ($TLE_{IND\text{-}NORM}$) is determined as follows:

$$TLE_{IND\text{-}NORM} = \pm \sqrt{\begin{array}{l} Sa^2 + I/Ia^2 + Ia^2 + Sd^2 + I/Id^2 + Id^2 \\ + Sm^2 + I/Im^2 + Im^2 + Sv^2 + I/Iv^2 + Iv^2 \\ + Sp^2 + I/Ip^2 + Ip^2 + St_{n1}{}^2 + I/It^2 + It^2 \\ + Sh_n{}^2 + I/Ih^2 + Ih^2 + Sr_n{}^2 + I/Ir^2 + Ir^2 \\ + Ss_n{}^2 + I/Is^2 + Is^2 + Sspe_n{}^2 + Sope_n{}^2 + Irea^2 \end{array}} \pm PE_n \pm Bias$$

Substituting for the Total Normal Indicator Loop Error ($TLE_{IND\text{-}NORM}$):

$$TLE_{IND\text{-}NORM} = \pm \sqrt{\begin{array}{l} 0^2 + 0.500^2 + 0^2 + 0.518^2 + 0.500^2 + 1.028^2 \\ + 0^2 + 0.095^2 + 0^2 + 0.500^2 + 0.250^2 + 1.750^2 \\ + 0^2 + 1.000^2 + 0^2 + 1.090^2 + 0^2 + 0^2 \\ + 0^2 + 0^2 + 0^2 + 0^2 + 0^2 + 0^2 \\ + 0^2 + 0^2 + 0^2 + 0^2 + 0^2 + 0^2 \end{array}} + 0 + 0$$

$$TLE_{IND\text{-}NORM} = \pm\ 2.720\ \%\ span \qquad (95/95)$$

Per Section 3.3.3.13 of Reference G.1, the Total Normal Indicator Loop Error ($TLE_{IND\text{-}NORM}$) is converted from 95/95 to 75/75 statistics as follows:

$$TLE_{IND\text{-}NORM} = \pm\ 2.720\ \%\ span * (1.15/1.96)$$

$$\mathbf{TLE_{IND\text{-}NORM} = \pm\ 1.596\ \%\ span} \qquad \mathbf{(75/75)}$$

Per Reference P.1 and P.2, the calibrated span in engineering units is 60 psi. Converting the 75/75 Total Normal Indicator Loop Error ($TLE_{IND\text{-}NORM}$) to process units gives,

$TLE_{IND\text{-}NORM}$ = ± (1.596 % span) * (60 psi) / 100%

$TLE_{IND\text{-}NORM}$ = ± 0.958 psi **(75/75)**

Per Reference G.36, the Control Room indication for Low Range Containment Pressure (PI-945, PI-947 and PI-949) has a minor division of 1 psi. Per Section 7.1, the $TLE_{IND\text{-}NORM}$ value should be rounded to the precision that is readable on the associated loop indicator. Per Section 3.3.5.3 of Reference G.1, the readability of these indicators is ± ½ the smallest division (or 0.5 psig). Therefore, the $TLE_{IND\text{-}NORM}$ value is conservatively rounded up to the nearest 0.5 psig interval.

$TLE_{IND\text{-}NORM}$ = ± 1.00 psi **(75/75)**

The parametric values are determined using Eq. 7.1.9-1. The Tech Spec limits per Section 6.6 are ≥ -2.0 psig and ≤ +2.0 psig. Therefore,

Parametric Values = ± (2 psig – 1.0 psi) = ± 1.0 psig

Low Range Containment Pressure Parametric Limits (Control Board Indicators PI-945, PI-947 and PI-949) are:

≥ -1.0 psig and ≤ +1.0 psig **(75/75)**

8.4.4 Total PPCS Loop Error (TLE_{PPCS})

As stated in Section 7.1.1 of this calculation, Low Range Containment Pressure PPCS indication is a parametric value, classified as a Category B function, and is combined into a 75/75 total loop error. Applicable uncertainties are listed in Section 8.2 and summarized in Section 8.3.

Using Equation 7.1.2-3, the Total PPCS Loop Error (TLE_{PPCS}) is determined as follows:

$$TLE_{PPCS} = \pm \sqrt{\begin{array}{l} Sa^2 + I/Ia^2 + PPCSa^2 + Sd^2 + I/Id^2 + PPCSd^2 \\ + Sm^2 + I/Im^2 + PPCSm^2 + Sv^2 + I/Iv^2 + PPCSv^2 \\ + Sp^2 + I/Ip^2 + PPCSp^2 + St_{n1}{}^2 + I/It^2 + PPCSt^2 \\ + Sh_n{}^2 + I/Ih^2 + PPCSh^2 + Sr_n{}^2 + I/Ir^2 + PPCSr^2 \\ + Ss_n{}^2 + I/Is^2 + PPCSs^2 + Sspe_n{}^2 + Sope_n{}^2 + PPCSrea^2 \end{array}} \pm PE_n \pm Bias$$

Substituting for normal Total PPCS Loop Error (TLE_{PPCS}):

$$TLE_{PPCS} = \pm \sqrt{\begin{array}{l} 0^2 + 0.500^2 + 0.510^2 + 0.518^2 + 0.500^2 + 0^2 \\ + 0^2 + 0.095^2 + 0.075^2 + 0.500^2 + 0.250^2 + 0.500^2 \\ + 0^2 + 1.000^2 + 0^2 + 1.090^2 + 0^2 + 0^2 \\ + 0^2 + 0^2 + 0^2 + 0^2 + 0^2 + 0^2 \\ + 0^2 + 0^2 + 0^2 + 0^2 + 0^2 + 0.017^2 \end{array}} + 0 + 0$$

TLE_{PPCS} = ± 1.948 % span (95/95)

Per Section 3.3.3.13 of Reference G.1, the Total PPCS Loop Error (TLE_{PPCS}) is converted from 95/95 to 75/75 statistics as follows:

TLE_{PPCS} = ± 1.948 % span * (1.15/1.96)

TLE_{PPCS} = ± 1.143 % span **(75/75)**

Per Reference P.1 and P.2, the calibrated span in engineering units is 60 psi. Converting the 75/75 Total PPCS Loop Error (TLE_{PPCS}) to process units and rounding to the calibration procedure precision.

TLE_{PPCS} = ± (1.143 % span) * (60 psi) / 100%

TLE_{PPCS} = ± 0.7 psi **(75/75)**

The parametric values are determined using Eq. 7.1.9-1. The Tech Spec limits per Section 6.6 are ≥ - 2.0 psig and ≤ +2.0 psig. Therefore,

Parametric Values = ± (2 psig – 0.7 psi) = ± 1.3 psig

Low Range Containment Pressure Parametric Limits (PPCS P-945, P-947 and P-949) are:

≥ - 1.3 psig and ≤ +1.3 psig **(75/75)**

8.5 Acceptable As-Left and As-Found Calibration Tolerances

8.5.1 Acceptable As-Left Calibration Tolerances

Per Section 3.3.8.6 of Reference G.1, the As-Left Tolerance is determined using the equations shown in Section 7.1.4 of this calculation.

References P.1 through P.4 and P.13 through P.18 show that each device analyzed in this calculation is calibrated separately. Therefore, the As-Left Tolerance for each device is calculated independently. The tolerances are calculated with the 95/95 uncertainty values.

8.5.1.1 Sensor As-Left Tolerances (SAL)

Using Equation 7.1.4-1, the Acceptable As-Left Tolerance for the Sensor (transmitter) is:

SAL = ± Sv
SAL = ± 0.500 % span Section 8.2.4

Converting to mAdc and rounding to procedure precision:

SAL = ± 0.5 % span * (40 mAdc / 100 %)

SAL = ± 0.20 mAdc

8.5.1.2 Bistable As-Left Tolerances (BAL)

Using Equation 7.1.4-2, the Acceptable As-Left Tolerance for the Bistable is:

BAL = ± Bv
BAL = ± 0.250 % span Section 8.2.15

Converting to Vdc and rounding to procedure precision (BAL is in Vdc due to the 10-ohm dropping resistor at the Test Point per Ref. D.12 through D.17):

BAL = ± 0.250 % span * (40 mAdc / 100 %) * (10 Ω / 1000 mAdc / A)

BAL = ± 0.001 Vdc

Converting to psig, using calibrated span of 60 psig (Ref. P.1 and P.2):

BAL = ± 0.250 % span * (60 psig / 100 %)

BAL = ± 0.15 psig

8.5.1.3 Current-to-Current Converter As-Left Tolerance (I/IAL)

Using Equation 7.1.4-3, the Acceptable As-Left Tolerance for the I/I Converter is:

I/IAL = ± I/Iv
I/IAL = ± 0.250 % span Section 8.2.24

Converting to mAdc and rounding to procedure precision:

I/IAL = ± 0.250 % span * (40 mAdc / 100 %)

I/IAL = ± 0.10 mAdc

8.5.1.4 Indicator As-Left Tolerances (IAL)

Using Equation 7.1.4-4, the Acceptable As-Left Tolerance for the Indicator is:

IAL = ± Iv
IAL = ± 1.750 % span — Section 8.2.33

Converting to mAdc and rounding to procedure precision:

IAL = ± 1.750 % span * (40 mAdc / 100 %)

IAL = ± 0.70 mAdc

8.5.1.5 PPCS As-Left Tolerances (PPCSAL)

Using Equation 7.1.4-5, the Acceptable As-Left Tolerance for the PPCS is:

PPCSAL = ± PPCSv
PPCSAL = ± 0.500 % span — Section 8.2.43

Converting to pressure units and rounding to procedure precision:

PPCSAL = ± 0.500 % span * (60 psig/ 100 %)

PPCSAL = ± 0.3 psig

8.5.2 Acceptable As-Found Calibration Tolerances

Per Section 3.3.8.6 of Reference G.1, the As-Found Tolerance is determined using the equations shown in Section 7.1.3 of this calculation.

Per References P.1 through P.4 and P.13 through P.18 each device analyzed in this calculation is calibrated separately. Therefore, the As-Found Tolerance for each device is calculated independently. The tolerances are calculated with the 95/95 uncertainty values.

8.5.2.1 Sensor As-Found Tolerance (SAF)

Using Equation 7.1.3-1, the Acceptable As-Found Tolerance for the Sensor (transmitter) is:

$$SAF = \pm \sqrt{Sv^2 + Sd^2 + Sm^2}$$

where:

Sv	= ± 0.500 % span	Section 8.2.4
Sd	= ± 0.518 % span	Section 8.2.2
Sm	= ± 0.000 % span	Section 8.2.3

$$SAF = \pm \sqrt{0.500^2 + 0.518^2 + 0.000^2}$$

$$SAF = \pm 0.720\ \%\ span$$

Converting to mAdc and rounding to procedure precision:

$$SAF = \pm 0.720\ \%\ span * (40\ mAdc / 100\ \%)$$

$$\mathbf{SAF = \pm 0.29\ mAdc}$$

8.5.2.2 Bistable As-Found Tolerance (BAF)

Using Equation 7.1.3-2, the Acceptable As-Found Tolerance for the Bistable is:

$$BAF = \pm \sqrt{Bv^2 + Bd^2 + Bm^2}$$

where:

Bv	= ± 0.250 % span	Section 8.2.15
Bd	= ± 0.212 % span	Section 8.2.13
Bm	= ± 0.000 % span	Section 8.2.14

$$BAF = \pm \sqrt{0.250^2 + 0.212^2 + 0^2}$$

$$BAF = \pm 0.328\ \%\ span$$

Converting to Vdc and rounding to procedure precision (BAF is in Vdc due to the 10-ohm dropping resistor at the Test Point per Ref. D.12 through D.17):

$$BAF = \pm 0.328\ \%\ span * (40\ mAdc / 100\ \%) * (10\ \Omega / 1000\ mAdc / A)$$

$$\mathbf{BAF = \pm 0.0013\ Vdc}$$

Converting to psig, using calibrated span of 60 psig (Ref. P.1 and P.2):

$$BAF = \pm 0.328\ \%\ span * (60\ psig / 100\ \%)$$

$$\mathbf{BAF = \pm 0.20\ psig}$$

8.5.2.3 Current-to-Current Converter As-Found Tolerance (I/IAF)

Using Equation 7.1.3-3, the Acceptable As-Found Tolerance for the I/I Converter is:

$$I/IAF = \pm \sqrt{I/Iv^2 + I/Id^2 + I/Im^2}$$

where:

I/Iv	= ± 0.250 % span	Section 8.2.24
I/Id	= ± 0.500 % span	Section 8.2.22
I/Im	= ± 0.095 % span	Section 8.2.23

$$I/IAF = \pm \sqrt{0.250^2 + 0.500^2 + 0.095^2}$$

$$I/IAF = \pm 0.567 \text{ \% span}$$

Converting to mAdc and rounding to procedure precision:

$$I/IAF = \pm 0.567 \text{ \% span} * (40 \text{ mAdc} / 100 \text{ \%})$$

$$\mathbf{I/IAF = \pm 0.23 \text{ mAdc}}$$

8.5.2.4 Indicator As-Found Tolerance (IAF)

Using Equation 7.1.3-4, the Acceptable As-Found Tolerance for the Indicator is:

$$IAF = \pm \sqrt{Iv^2 + Id^2 + Im^2}$$

where:

Iv	= ± 1.750 % span	Section 8.2.33
Id	= ± 1.028 % span	Section 8.2.31
Im	= ± 0.000 % span	Section 8.2.32

$$IAF = \pm \sqrt{1.750^2 + 1.028^2 + 0^2}$$

$$IAF = \pm 2.030 \text{ \% span}$$

Converting to mAdc and rounding to procedure precision:

$$IAF = \pm 2.030 \text{ \% span} * (40 \text{ mAdc} / 100 \text{ \%})$$

$$\mathbf{IAF = \pm 0.81 \text{ mAdc}}$$

8.5.2.5 PPCS As-Found Tolerance (PPCSAF)

Using Equation 7.1.3-5, the Acceptable As-Found Tolerance for the PPCS is:

$$PPCSAF = \pm \sqrt{PPCSv^2 + PPCSd^2 + PPCSm^2}$$

where:

PPCSv = ± 0.500 % span	Section 8.2.43
PPCSd = ± 0.000 % span	Section 8.2.41
PPCSm = ± 0.075 % span	Section 8.2.42

$$PPCSAF = \pm \sqrt{0.500^2 + 0.000^2 + 0.065^2}$$

PPCSAF = ± 0.506 % span

Converting to psig and rounding to procedure precision:

PPCSAF = ± 0.506 % span * (60 psig / 100 %)

PPCSAF = ± 0.30 psig

8.6 Setpoint Evaluations

8.6.1 High Containment Pressure – Safety Injection and Condensate Isolation Actuation Setpoint Evaluation

For an increasing setpoint towards Analytical Limit, Equation 7.1.6-1 is used.

$$LTSP = AL - (0.839) * TLE_{TRIP}$$

Where:

AL	= 6 psig	Section 6.5
TLE_{TRIP}	= ± 0.808 psi	Section 8.4.1

Substituting,

$$LTSP = 6 - (0.839) * 0.808 \text{ psi}$$

$$\mathbf{LTSP = 5.322 \text{ psig}} \qquad \textbf{(95/95)}$$

From Section 6.5, the Field Trip Setpoint (FTSP) for High Containment Pressure – Safety Injection and High Containment Pressure – Condensate Isolation is 5 psig. The FTSP is conservative compared to the calculated LTSP. Per Section 2.0, this setpoint is acceptable, and may be retained.

The margin between LTSP and FTSP is calculated in accordance with Section 3.3.8.5 of Reference G.1:

$$Margin = LTSP - FTSP$$

Where:

LTSP	= 5.322 psig	
FTSP	= 5.0 psig	Section 6.5

Substituting,

$$Margin = 5.322 \text{ psig} - 5.0 \text{ psig}$$

$$\mathbf{Margin = 0.322 \text{ psi}}$$

8.6.2 High-High Containment Pressure – Containment Spray Trip Setpoint Evaluation

For an increasing setpoint towards Analytical Limit, Equation 7.1.6-1 is used.

$$LTSP = AL - (0.839) * TLE_{TRIP}$$

Where:

AL	= 30 psig	Section 6.5
TLE_{TRIP}	= ± 0.808 psi	Section 8.4.1

Substituting,

$$LTSP = 30 - (0.839) * 0.808 \text{ psi}$$

LTSP = 29.322 psig **(95/95)**

From Section 6.5, the Field Trip Setpoint (FTSP) for High-High Containment Pressure – Containment Spray Actuation setpoint is 25 psig. The FTSP is conservative compared to the calculated LTSP. Per Section 2.0, this setpoint is acceptable, and may be retained.

The margin between LTSP and FTSP is calculated in accordance with Section 3.3.8.5 of Reference G.1:

Margin = LTSP – FTSP

Where:

LTSP = 29.322 psig
FTSP = 25.0 psig Section 6.5

Substituting,

Margin = 29.322 psig – 25.0 psig

Margin = 4.322 psi

8.7 Operability Limit (OL) Evaluations

This section determines Operability Limits for the low range containment pressure ESFAS protective functions. Operability Limits are limits for the as-found value of the trip bistable during the Tech Spec Channel Operational Test (COT) surveillance, to determine if the bistable is operating within its 3-sigma drift limits. There are two Operability Limits per trip function, one on each side of the FTSP.

Per Section 7.1.7 the OL on each side of the FTSP is calculated by applying the square-root-sum-of-the-squares combination of the bistable As-Left tolerance and 3σ drift to the FTSP.

8.7.1 High Containment Pressure – Safety Injection and Condensate Isolation Actuation Operability Limit Evaluation

Using Equation 7.1.7-3 to determine the bistable 3σ drift value,

$Rd_{3\sigma} = (1.5)\ Rd_{2\sigma}$ (Eq. 7.1.7-3)
$Rd_{3\sigma} = (1.5)\ 0.212\ \%$ span ($Rd_{2\sigma}$ from Section 8.2.13)
$Rd_{3\sigma} = \pm\ 0.318\ \%$ span

For the transmitter range of -6 psig to 54 psig, the FTSP for the high containment pressure – safety injection and condensate isolation actuation of 5 psig, expressed as percent span, is:

$FTSP = ([5 - (-6)] \div 60) * 100 = 18.333\ \%$ span

Using Equation 7.1.7-1, the OL^+ is determined as:

$OL^+ = FTSP + [BAL^2 + Rd_{3\sigma}^2]^{1/2}$ (Eq. 7.1.7-1)
$OL^+ = 18.333\ \% + (0.250^2 + 0.318^2)^{1/2}$ (BAL from Section 8.5.1.2)
$OL^+ = 18.333\ \% + 0.405$
$OL^+ = 18.738\ \%$ span

Expressed in psig, $OL^+ = (0.18738 * 60) + (-6) =$ **5.24 psig**

Using Equation 7.1.7-2, the OL^- is determined as:

$OL^- = FTSP - [BAL^2 + Rd_{3\sigma}^2]^{1/2}$ (Eq. 7.1.7-2)
$OL^- = 18.333\ \% - (0.250^2 + 0.318^2)^{1/2}$
$OL^- = 18.333\ \% - 0.405$
$OL^- = 17.928\ \%$ span

Expressed in psig, $OL^- = (0.17928 * 60) + (-6) =$ **4.76 psig**

Because the High Containment Pressure – Safety Injection and Condensate Isolation actuation is an increasing trip, the positive OL^+ value of 5.24 psig

should be the limit compared to the COT as-found value to determine Technical Specification operability of the channel. However, an as-found value found outside either the OL^+ or OL^- indicates that the channel is operating abnormally.

8.7.2 High-High Containment Pressure – Containment Spray Operability Limit Evaluation

Using Equation 7.1.7-3 to determine the bistable 3σ drift value,

$Rd_{3\sigma} = (1.5)\, Rd_{2\sigma}$ (Eq. 7.1.7-3)
$Rd_{3\sigma} = (1.5)\, 0.212\ \%$ span ($Rd_{2\sigma}$ from Section 8.2.13)
$Rd_{3\sigma} = \pm\, 0.318\ \%$ span

For the transmitter range of -6 psig to 54 psig, the FTSP for the High-High Containment Pressure – Containment Spray of 25 psig, expressed as percent span, is:

$$FTSP = ([25 - (-6)] \div 60) * 100 = 51.667\ \%\ \text{span}$$

Using Equation 7.1.7-1, the OL^+ is determined as:

$OL^+ = FTSP + [BAL^2 + Rd_{3\sigma}^2]^{1/2}$ (Eq. 7.1.7-1)
$OL^+ = 51.667\ \% + (0.250^2 + 0.318^2)^{1/2}$ (BAL from Section 8.5.1.2)
$OL^+ = 51.667\ \% + 0.405$
$OL^+ = 52.072\ \%$ span

Expressed in psig, $OL^+ = (0.52072 * 60) + (-6) =$ **25.24 psig**

Using Equation 7.1.7-2, the OL^- is determined as:

$OL^- = FTSP - [BAL^2 + Rd_{3\sigma}^2]^{1/2}$ (Eq. 7.1.7-2)
$OL^- = 51.667\ \% - (0.250^2 + 0.318^2)^{1/2}$
$OL^- = 51.667\ \% - 0.405$
$OL^- = 51.262\ \%$ span

Expressed in psig, $OL^- = (0.51262 * 60) + (-6) =$ **24.76 psig**

Because the High-High Containment Pressure – Containment Spray is an increasing trip, the positive OL^+ value of 25.24 psig should be the limit compared to the COT as-found value to determine Technical Specification operability of the channel. However, an as-found value found outside either the OL^+ or OL^- indicates that the channel is operating abnormally.

8.8 Channel Check Tolerances

Using Equation 7.1.5-1, the Channel Check Tolerance is determined as follows (at a 95/95 confidence value):

$$CCT = \pm \sqrt{\begin{array}{l}(Sa^2 + I/Ia^2 + Ia^2 + Sd^2 + I/Id^2 + Id^2 + Sv^2 + I/Iv^2 \\ + Iv^2 + Irea^2)_{ind\ a} + (Sa^2 + I/Ia^2 + Ia^2 + Sd^2 + I/Id^2 + Id^2 \\ + Sv^2 + I/Iv^2 + Iv^2 + Irea^2)_{ind\ b}\end{array}}$$

where:

Sa	= ± 0.000 % span	Section 8.2.1
Sd	= ± 0.518 % span	Section 8.2.2
Sv	= ± 0.500 % span	Section 8.2.4
I/Ia	= ± 0.500 % span	Section 8.2.21
I/Id	= ± 0.500 % span	Section 8.2.22
I/Iv	= ± 0.250 % span	Section 8.2.24
Ia	= ± 0.000 % span	Section 8.2.30
Id	= ± 1.028 % span	Section 8.2.31
Iv	= ± 1.750 % span	Section 8.2.33
Irea	= ± 0.000 % span	Section 8.2.39

Substituting to calculate a 95/95 confidence value:

$$CCT = \pm \sqrt{\begin{array}{l}(0^2 + 0.500^2 + 0^2 + 0.518^2 + 0.500^2 + 1.028^2 + 0.500^2 + 0.250^2 \\ + 1.750^2 + 0^2)_{ind\ a} + (0^2 + 0.500^2 + 0^2 + 0.518^2 + 0.500^2 + 1.028^2 \\ + 0.500^2 + 0.250^2 + 1.750^2 + 0^2)_{ind\ b}\end{array}}$$

CCT = ± 3.225 % span **(95/95)**

Converting to process units,

CCT = ± (3.225 % span * 60 psig) / 100 %

CCT = ± 1.935 psig **(95/95)**

Per Reference G.36, the Control Room indication for Low Range Containment Pressure (LI-945, LI-947 and LI-949) has a minor division of 1 psig. Per Section 7.1, the CCT value should be rounded to the precision that is readable on the associated loop indicator. Per Section 3.3.5.3 of Reference G.1, the readability of these indicators is ± ½ the smallest division (or 0.5 psig). Therefore, the CCT value is rounded up to the nearest 0.5 psig interval.

CCT = ± 2.00 psig **(95/95)**

The operator uses the CCT in the periodic surveillance of the Low Range Containment Pressure per References G.30 and G.31. From References G.30 and G.31, the existing CCT for Low Range Containment Pressure is ± 1.5 psig. The existing CCT is less than the calculated CCT. Per Section 2.0, the existing CCT is acceptable and may be retained.

8.9 Scaling

8.9.1 High Containment Pressure – Safety Injection and Condensate Isolation FTSP and Operability Limits

From Table 6.3-1, the model number of the transmitters is Foxboro N-E11GM-HIB1-BEL/AEL. From Reference V.2, the transmitters have a 10 to 50 mAdc output range corresponding to an input of –6 to 54 psig (Ref. P.3 and P.4).

$m = (y_2 - y_1) / (x_2 - x_1)$ Equation 7.1.8-2

Where:

x_1 = -6 psig
x_2 = 54 psig
y_1 = 10 mAdc
y_2 = 50 mAdc

Substituting,

m = [(50 mAdc) - (10 mAdc)] / [(54 psig) - (-6 psig)]
m = 40 mAdc/ 60 psi

Solving for the equivalent signal in mAdc corresponding to the FTSP of 5 psig

$y = m * (x - x_1) + y_1$ Equation 7.1.8-3

where:

x = 5 psig Section 8.7.1
x_1 = -6 psig
y = FTSP (mAdc)
y_1 = 10 mAdc

Substituting,

y = [(40 mAdc/ 60 psi) * (5 psig – (-6 psig))] + 10 mAdc

y = 17.33 mAdc

Converting to Vdc due to a 10 Ω resistor across the calibration point (Ref. D.12 through D.17)

y = 17.33 mAdc * 10 Ω / 1000 mVdc per Vdc

y = 0.1733 Vdc

For an OL^+ of 5.24 psig (Section 8.7.1) the equivalent equation is:

$y = m * (x - x_1) + y_1$ Equation 7.1.8-3

where:

x = 5.24 psig
x_1 = -6 psig
y = OL^+ (mAdc)
y_1 = 10 mAdc

Substituting,

y = [(40 mAdc/ 60 psi) * (5.24 psig – (-6 psig))] + 10 mAdc

y = 17.49 mAdc

Converting to Vdc due to a 10 Ω resistor across the calibration point (Ref. D.12 through D.17)

y = 17.49 mAdc * 10 Ω / 1000 mVdc per Vdc

y = 0.1749 Vdc

For an OL⁻ of 4.76 psig (Section 8.7.1) the equivalent equation is:

$y = m * (x - x_1) + y_1$ Equation 7.1.8-3

where:

x = 4.76 psig
x_1 = -6 psig
y = OL⁻ (mAdc)
y_1 = 10 mAdc

Substituting,

y = [(40 mAdc/ 60 psi) * (4.76 psig – (-6 psig))] + 10 mAdc

y = 17.17 mAdc

Converting to Vdc due to a 10 Ω resistor across the calibration point (Ref. D.12 through D.17)

y = 17.17 mAdc * 10 Ω / 1000 mVdc per Vdc

y = 0.1717 Vdc

Table 8.9-1
1(2)PC-945A/B, 947A/B 949A/B – High Containment Pressure Bistable Calibration – Safety Injection and Condensate Isolation

Function	Input (psig)	Output (mAdc)	Output (Vdc)
OL+	5.24	17.49	0.1749
FTSP↑	5	17.33	0.1733
OL-	4.76	17.17	0.1717

8.9.2 High-High Containment Pressure – Containment Spray FTSP and Operability Limits

Determine the current signal equivalent to the OL and FTSP:

$m = (y_2 - y_1) / (x_2 - x_1)$ Equation 7.1.8-2

Where:

x_1 = -6 psig
x_2 = 54 psig
y_1 = 10 mAdc
y_2 = 50 mAdc

Substituting,

m = [(50 mAdc) - (10 mAdc)] / [(54 psig) - (-6 psig)]
m = 40 mAdc/ 60 psi

Solving for the equivalent signal in mAdc corresponding to the FTSP of 25 psig

$y = m * (x - x_1) + y_1$ Equation 7.1.8-3

where:

x = 25 psig
x_1 = -6 psig
y = FTSP (mAdc)
y_1 = 10 mAdc

Substituting,

y = [(40 mAdc/ 60 psi) * (25 psig – (-6 psig))] + 10 mAdc

y = 30.67 mAdc

Converting to Vdc due to a 10 Ω resistor across the calibration point (Ref. D.12 through D.17)

y = 30.67 mAdc * 10 Ω / 1000 mVdc per Vdc

y = 0.3067 Vdc

For an OL^+ of 25.24 psig (Section 8.7.2) the equivalent equation is:

$y = m * (x - x_1) + y_1$ Equation 7.1.8-3

where:

x = 25.24 psig
x_1 = -6 psig
y = OL^+ (mAdc)
y_1 = 10 mAdc

Substituting,

y = [(40 mAdc/ 60 psi) * (25.24 psig – (-6 psig))] + 10 mAdc

y = 30.83 mAdc

Converting to Vdc due to a 10 Ω resistor across the calibration point (Ref. D.12 through D.17)

y = 30.83 mAdc * 10 Ω / 1000 mVdc per Vdc

y = **0.3083 Vdc**

For an OL^- of 24.76 psig (Section 8.7.2) the equivalent equation is:

$$y = m * (x - x_1) + y_1 \qquad \text{Equation 7.1.8-3}$$

where:

x = 24.76 psig
x_1 = -6 psig
y = OL^- (mAdc)
y_1 = 10 mAdc

Substituting,

y = [(40 mAdc/ 60 psi) * (24.76 psig – (-6 psig))] + 10 mAdc

y = **30.51 mAdc**

Converting to Vdc due to a 10 Ω resistor across the calibration point (Ref. D.12 through D.17)

y = 30.51 mAdc * 10 Ω / 1000 mVdc per Vdc

y = **0.3051 Vdc**

Table 8.9-2
1(2)PC-945A/B, 947A/B 949A/B – High-High Containment Pressure Bistable Calibration – Containment Spray

Function	Input (psig)	Output (mAdc)	Output (Vdc)
OL^+	25.24	30.83	0.3083
FTSP↑	25	30.67	0.3067
OL^-	24.76	30.51	0.3051

9.0 RESULTS AND CONCLUSIONS, WITH LIMITATIONS

9.1 Analytical Limits (AL)

The Analytical Limits are determined by Westinghouse (Ref. G.25) and are summarized below:

Table 9.1-1 Analytical Limits

ESFAS Function	Analytical Limit (AL)	Reference
High Containment Pressure – Safety Injection and Condensate Isolation	**6.0 psig**	**Section 6.5**
High-High Containment Pressure – Containment Spray	**30.0 psig**	**Section 6.5**

9.2 Limiting Trip Setpoints, Operability Limits (OL), and Recommended Tech Spec Changes

AR 896611 determined that the Technical Specification Allowable Values for several protection system functions in TS 3.3.1 (RPS) and TS 3.3.2 (ESFAS) were non-conservative. As a result, the I&C calibration procedures were revised to install temporary administrative limits (termed Allowable Limits in the ICPs) on the trip bistable as-found values until a license amendment is approved to revise the TS sections.

The Limiting Trip Setpoints for primary trip functions determined in this calculation provide new Technical Specification limits that will be termed as Allowable Values in tech specs for channel operability to protect the accident analyses Analytical Limits. The LTSPs also satisfy the definition of a Limiting Safety System Setting in 10CFR50.36. Backup trips and permissives do not have a LTSP that can be used as an Allowable Value in Tech Specs because there is no analytical limit to "anchor" the LTSP.

Operability Limits have been determined for all trip functions (primary trips, backup trips, and the SI Block/Unblock function). The OLs provide new limits to be applied in the I&C calibration procedures for establishing Technical Specification operability of the trip channels during Channel Operational Testing (COT).

It is recommended that the Operability Limits for both primary and backup trips be included in the Technical Requirements Manual as limits (more restrictive than the LTSPs) for establishing channel operability during channel surveillance testing. The reason for including OLs in the TRM rather than the Technical Specifications is to allow the station flexibility to revise the field setpoint values, along with their as-left, as-found, and OL values, without requiring prior NRC approval. The LTSPs, which provide protection for the accident analyses, are the appropriate Allowable Values for the protection functions in the Specifications and would remain bounding limits for the primary trips (only).

Table 9.2-1 Operability Limits

Function	Existing AV	Calculated OL^+ and OL^-	Recommended Tech Spec OL (for AV)	Reference
High Containment pressure – Safety Injection and Condensate Isolation Actuation	≤ 6 psig	OL^+ 5.24 psig OL^- 4.76 psig	≤ 5.322 psig	**Sections 8.7.1 8.6.1**
High-High Containment Pressure – Containment Spray	≤ 30 psig	OL^+ 25.24 psig OL^- 24.76 psig	≤ 29.322 psig	**Sections 8.7.2 8.6.2**

9.3 Limiting Trip Setpoints (LTSP) and Field Trip Setpoints (FTSP)

This calculation has determined that the existing Field Trip Setpoints (FTSP) for High Containment Pressure – Safety Injection and Condensate Isolation and High-High Containment Pressure –Containment Spray are conservative with respect to the calculated LTSP and may be retained.

Table 9.3-1 Limiting Trip Setpoints/Field Trip Setpoints

ESFAS Function	Calculated LTSP	FTSP	Margin	Reference
High Containment Pressure – Safety Injection and Condensate Isolation	**5.322 psig**	**5.0 psig**	**0.322 psi**	**Section 8.6.1**
High-High Containment Pressure – Containment Spray	**29.322 psig**	**25 psig**	**4.322 psi**	**Section 8.6.2**

9.4 Tech Spec Surveillance

The Indicator and PPCS loops are associated with the parametric values for Tech Spec Surveillance compliance. The normal loop uncertainties are summarized below:

Table 9.4-1 Normal Loop Uncertainties

	Indicator Loop Uncertainties		PPCS Loop Uncertainties		Reference
75/75 Confidence	**± 1.596 % span**	**± 1.00 psi**	**± 1.143 % span**	**± 0.7 psi**	**Section 8.4.3 Section 8.4.4**

From Section 6.6, the Tech Spec limits are ≥ -2.0 psig and ≤ +2 psig. The Tech Spec limits that include loop uncertainties for the parametric values (rounded to the indicator and PPCS readability) are:

Low Range Containment Pressure Limits (Control Board Indicators, PI-945, PI-947 and PI-949):

≥ -1.0 psig and ≤ +1.0 psig **(Section 8.4.3)**

Low Range Containment Pressure Limits (PPCS display, P-945, P-947 and P-949):

≥ -1.3 psig and ≤ +1.3 psig **(Section 8.4.4)**

The calculation of the parametric values above resolve the issues raised per A/R 01055221.

9.5 EOP Inputs

The indication loop uncertainties for input to EOP are summarized below.

Table 9.5-1 EOP Indication

	Indicator Loop Uncertainties		Reference
95/95 Confidence (normal conditions)	± 2.928 % span	± 1.757 psi	Section 8.4.2
75/75 Confidence (normal conditions)	± 1.718 % span	± 1.031 psi	Section 8.4.2
95/95 Confidence (accident conditions)	± 6.676 % span	± 4.006 psi	Section 8.4.2
75/75 Confidence (accident conditions)	± 3.917 % span	± 2.350 psi	Section 8.4.2

9.6 Channel Check Tolerance

The Channel Check Tolerance for control board indicators is summarized below. The existing CCT value is acceptable and may be retained.

Table 9.6-1 Channel Check Tolerances

	Calculated Channel Check Tolerances		Existing Channel Check Tolerance	Reference
95/95 Confidence	± 3.225 % span	± 2.0 psi	± 1.5 psi	Section 8.8

9.7 Acceptable As-Left and As-Found Tolerances

This Calculation has determined the Acceptable As-Found and As-Left Tolerances, summarized below, for the instruments listed in Section 1.5 (Table 1-1). The calibration procedures listed in Section 10 should be revised as appropriate.

Table 9.7-1 As-Left/As-Found Tolerances

Instrument	As-Left Tolerance	As-Found Tolerance	Reference
1(2)PT-945 1(2)PT-947 1(2)PT-949	**(SAL)** **± 0.20 mAdc**	**(SAF)** **± 0.29 mAdc**	**8.5.1.1** **8.5.2.1**
1(2)PC-945A/B 1(2)PC-947A/B 1(2)PC-949A/B	**(BAL)** **± 0.001 Vdc** **± 0.15 psig**	**(BAF)** **± 0.0013 Vdc** **±0.20 psig**	**8.5.1.2** **8.5.2.2**
1(2)PM-945 1(2)PM-947 1(2)PM-949	**(I/IAL)** **± 0.10 mAdc**	**(I/IAF)** **± 0.23 mAdc**	**8.5.1.3** **8.5.2.3**
1(2)PI-945 1(2)PI-947 1(2)PI-949	**(IAL)** **± 0.70 mAdc**	**(IAF)** **± 0.81 mAdc**	**8.5.1.4** **8.5.2.4**
1(2)P-945 1(2)P-947 1(2)P-949	**(PPCSAL)** **± 0.30 psig**	**(PPCSAF)** **± 0.30 psig**	**8.5.1.5** **8.5.2.5**

9.8 Scaling

Table 9.8-1 Scaling Values

Setpoints	Function	Input (psig)	Output (mAdc)	Output (Vdc)	Reference
High Containment Pressure – Safety Injection and Condensate Isolation	OL^+	5.24	17.49	0.1749	8.9.1
	As-Found	5.20	17.46	0.1746	8.5.2.2
	As-Left	5.15	17.43	0.1743	8.5.1.2
	FTSP↑	5	17.33	0.1733	6.5
	As-Left	4.85	17.23	0.1723	8.5.1.2
	As-Found	4.80	17.20	0.1720	8.5.2.2
	OL^-	4.76	17.17	0.1717	8.9.1
High-High Containment Pressure – Containment Spray	OL^+	25.24	30.83	0.3083	8.9.1
	As-Found	25.20	30.80	0.3080	8.5.2.2
	As-Left	25.15	30.77	0.3077	8.5.1.2
	FTSP↑	25	30.67	0.3067	6.5
	As-Left	24.85	30.57	0.3057	8.5.1.2
	As-Found	24.80	30.54	0.3054	8.5.2.2
	OL^-	24.76	30.51	0.3051	8.9.1

9.9 Limitations

9.9.1 M&TE Limitations

To preserve the validity of this calculation's results, this calculation requires that all future calibrations of the equipment (addressed in this calculation) be performed using the M&TE mentioned below (equivalent or better may also be used).

Table 9.9-1 M &TE

M&TE	Range	Accuracy	Reference
Current-to-Current Converters (output) and PPCS (Ref. P.1 and P.2)			
Fluke 45 (fast rate)	0-100 mAdc	± 0.025 mAdc (± 0.05 % RDG + 3 DG)	8.2.23 8.2.42
HP 34401A	0-100 mAdc	±0.030 mAdc (± 0.050 % RDG + 0.005% RNG)	8.2.23 8.2.42
Current-to-Current Converters (input) (Ref. P.1 and P.2)			
HP 34401A	0-1.0 Vdc	±0.000027 Vdc (± 0.004 % RDG + 0.0007% RNG)	8.2.23
Fluke 45	0-3.0 Vdc	±0.000236 Vdc (± 0.025 % RDG + 2 DG)	8.2.23
Fluke 8842A	0-2.0 Vdc	±0.000025 Vdc (± 0.003 % RDG + 2 DG)	8.2.23

9.9.2 Temperature Limitations

The results of this calculation are valid only if the temperature inside the Control/Computer Room instrumentation panels does not exceed 120 °F (For EOP inputs and trips). GAR 01031656 has been generated to track this limitation.

9.9.3 Implementation Limitation

Changes recommended by this calculation, such as As-Found and As-Left Tolerances to calibration sheets, and the Technical Specification Operability Limits, are NOT to be implemented without approval of the PBNP Design Authority or the appointed designee.

9.10 Graphical Representation of the Setpoints

9.10.1 High Containment Pressure – Safety Injection and Condensate Isolation Setpoints

Figure 9.10-1
High Containment Pressure – Safety Injection and Condensate Isolation Bistable
(PC-945A, 947A, 949A)

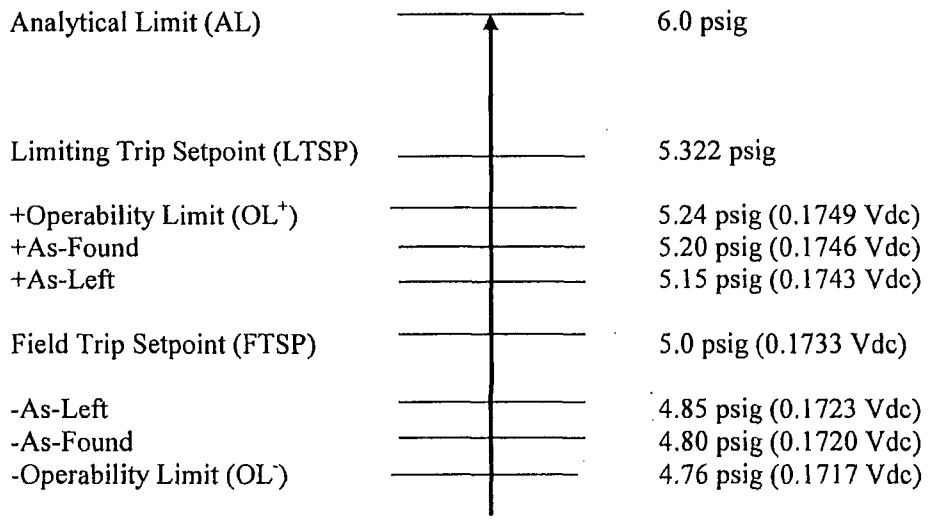

9.10.2 High-High Containment Pressure – Containment Spray Setpoint

Figure 9.10-2
High-High Containment Pressure – Containment Spray Bistable
(PC-945B, 947B, 949B)

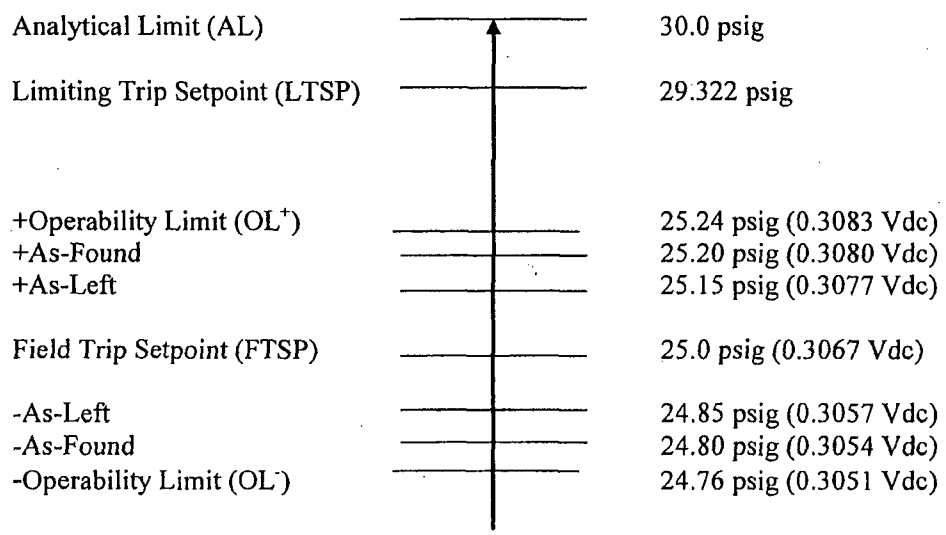

10.0 IMPACT ON PLANT DOCUMENTS

Note: Passport Engineering Change (EC) Number for Calculation PBNP-IC-17 is 12264.

- 1ICP 13.016L, Rev. 5, "Reactor Protection and Safeguards Analog Racks Containment Pressure 18 Month Calibration".

  New I/I Converter/Indicator As-Left Tolerances, I/I Converter/Indicator/PPCS As-Found Tolerances and specific PPCS M&TE for the P-945, P-947 and P-949 loops need to be incorporated. Passport A/R No. 01046198 will track the generated change to this document.

- 2ICP 13.016L, Rev. 5, "Reactor Protection and Safeguards Analog Racks Containment Pressure 18 Month Calibration".

  New I/I Converter/Indicator As-Left Tolerances, I/I Converter/Indicator/PPCS As-Found Tolerances and specific PPCS M&TE for the P-945, P-947 and P-949 loops need to be incorporated. Passport A/R No. 01046198 will track the generated change to this document.

- 1ICP 04.006-2, Rev. 8, "Containment Pressure Transmitter Outage Calibrations".

  New As-Found Tolerances for Transmitters 1PT-945, 1PT-947 and 1PT-949 need to be incorporated. Passport A/R No. 01046198 will track the generated change to this document.

- 2ICP 04.006-2, Rev. 8, "Containment Pressure Transmitter Outage Calibrations".

  New As-Found Tolerances for Transmitters 2PT-945, 2PT-947 and 2PT-949 need to be incorporated. Passport A/R No. 01046198 will track the generated change to this document.

- 1ICP 02.001RD, Rev. 9, "Reactor Protection and Engineered Safety Features Red Channel Analog 92 Day Surveillance Test".

  New As-Left Tolerances, As-Found Tolerances, and Operability Limits for Bistable 1PC-945A/B need to be incorporated. Passport A/R No. 01131513 will track the generated change to this document.

- 2ICP 02.001RD, Rev. 11, "Reactor Protection and Engineered Safety Features Red Channel Analog 92 Day Surveillance Test".

  New As-Left Tolerances, As-Found Tolerances, and Operability Limits for Bistable 2PC-945A/B need to be incorporated. Passport A/R No. 01131513 will track the generated change to this document.

- 1ICP-02.001BL, Rev. 12, "Reactor Protection and Engineered Safety Features Blue Channel Analog 92 Day Surveillance Test".

  New As-Left Tolerances, As-Found Tolerances and Operability Limits for Bistable 1PC-947A/B need to be incorporated. Passport A/R No. 01131513 will track the generated change to this document.

- 2ICP-02.001BL, Rev. 15, "Reactor Protection and Engineered Safety Features Blue Channel Analog 92 Day Surveillance Test".

  New As-Left Tolerances, As-Found Tolerances and Operability Limits for Bistable 2PC-947A/B need to be incorporated. Passport A/R No. 01131513 will track the generated change to this document.

- 1ICP-02.001WH, Rev. 11, "Reactor Protection and Engineered Safety Features White Channel Analog 92 Day Surveillance Test".

  New As-Left Tolerances, As-Found Tolerances, and Operability Limits for Bistable 1PC-949A/B need to be incorporated. Passport A/R No. 01131513 will track the generated change to this document.

- 2ICP-02.001WH, Rev. 11, "Reactor Protection and Engineered Safety Features White Channel Analog 92 Day Surveillance Test".

  □New As-Left Tolerances, As-Found Tolerances, and Operability Limits for Bistable 2PC-949A/B need to be incorporated. Passport A/R No. 01131513 will track the generated change to this document.

- 1ICP 02.020RD, Rev. 11, "Post-Refueling Pre-Startup RPS and ESF Red Channel Analog Surveillance Test"

  New As-Left Tolerances, As-Found Tolerances, and Operability Limits for Bistable 1PC-945A/B need to be incorporated. Passport A/R No. 01131513 will track the generated change to this document.

- 2ICP 02.020RD, Rev. 10, "Post-Refueling Pre-Startup RPS and ESF Red Channel Analog Surveillance Test"

  New As-Left Tolerances, As-Found Tolerances, and Operability Limits for Bistable 2PC-945A/B need to be incorporated. Passport A/R No. 01131513 will track the generated change to this document.

- 1ICP 02.020BL, Rev. 10, "Post-Refueling Pre-Startup RPS and ESF Blue Channel Analog Surveillance Test"

  New As-Left Tolerances, As-Found Tolerances, and Operability Limits for Bistable 1PC-947A/B need to be incorporated. Passport A/R No. 01131513 will track the generated change to this document.

- 2ICP 02.020BL, Rev. 10, "Post-Refueling Pre-Startup RPS and ESF Blue Channel Analog Surveillance Test"

  New As-Left Tolerances, As-Found Tolerances, and Operability Limits for Bistable 2PC-947A/B need to be incorporated. Passport A/R No. 01131513 will track the generated change to this document.

- 1ICP 02.020WH, Rev. 10, "Post-Refueling Pre-Startup RPS and ESF White Channel Analog Surveillance Test"

  New As-Left Tolerances, As-Found Tolerances, and Operability Limits for Bistable 1PC-949A/B need to be incorporated. Passport A/R No. 01131513 will track the generated change to this document.

- 2ICP 02.020WH, Rev. 10, "Post-Refueling Pre-Startup RPS and ESF White Channel Analog Surveillance Test"

  New As-Left Tolerances, As-Found Tolerances, and Operability Limits for Bistable 2PC-949A/B need to be incorporated. Passport A/R No. 01131513 will track the generated change to this document.

- STPT 2.1, Rev. 3, "Setpoint Document – Safety Injection".

Setpoint has been verified, no changes required. New Tech Spec Allowable Value needs to be incorporated. Passport A/R No. 01046198 will track the generated change to this document.

- STPT 2.3, Rev. 4, "Setpoint Document – Containment Pressure and LTOP".

  Setpoint has been verified, no changes required. New Tech Spec Allowable Value needs to be incorporated. Passport A/R No. 01046198 will track the generated change to this document.

- WEP-SPT-29, Rev. 0, "Containment Parameter EOP Setpoints".

  The uncertainties per this calculation are input to WEP-SPT-29. Calculation WEP-SPT-29 was placed on Administrative Hold via CAP 062255 and will be revised under the CRR Project.

- PBF-2034, Rev. 74 – Control Room Log – Unit 1, pages 119 and 120

  Channel Check Tolerances have been verified and no changes are required. New Parametric Values for PPCS points P-945, P-947 and P-947 need to be incorporated. Passport A/R No. 01046198 will track the generated change to this document.

- PBF-2035, Rev. 74 – Control Room Log – Unit 2, pages 119 and 120

  Channel Check Tolerances have been verified and no changes are required. New Parametric Values for PPCS points P-945, P-947 and P-947 need to be incorporated. Passport A/R No. 01046198 will track the generated change to this document.

- DBD-11, Rev. 10, "Safety Injection and Containment Spray System"

  Tech Spec Limits indicated in Item 8.135 need to be revised. Marked-up sheet is separately transmitted. (Key Words used in the search for all the DBDs are: "containment pressure", "30 psig", "25 psig", "15 psig", "psig", "steam line", "allowable value", and "analytical limit".) Passport A/R No. 01046198 will track the generated change to this document.

- DBD-24, Rev. 3, "ESF Actuation System"

  Analytical limits in Table 2-1, Containment pressure limits in Table 2-2, Channel Accuracy in Table 2-6 and Figure 2-4 need to be revised. Marked-up sheet is separately transmitted. Passport A/R No. 01046198 will track the generated change to this document.

- DBD-30, Rev. 10, "Containment Heating and Ventilation Systems"

  Instrument drift in Section 2.2.3, page 2-17 is incorrect and should be revised. Marked-up sheet is separately transmitted. Passport A/R No. 01046198 will track the generated change to this document.

- PBF-2061, Rev. 31, "Control Room Shift Turnover Checklist Unit 1"

  Revision 2 of this calculation has superseded EE 2001-0032, this form lists this engineering evaluation as the basis for action condition TS 3.6.4. The basis for this action condition is now PBNP-IC-17. Passport A/R No. 01116971 will track the generated change to this document.

- PBF-2062, Rev. 35, "Control Room Shift Turnover Checklist Unit 2"

  Revision 2 of this calculation has superseded EE 2001-0032, this form lists this engineering evaluation as the basis for action condition TS 3.6.4. The basis for this action condition is

now PBNP-IC-17. Passport A/R No. 01116987 will track the generated change to this document.

- TS-32 Unit 1, Miscellaneous Equipment Checks (Monthly). Channel Check Tolerances have been verified and no changes are required.
- TS-32 Unit 2, Miscellaneous Equipment Checks (Monthly). Channel Check Tolerances have been verified and no changes are required.
- Technical Specifications 3.3.2 (ESFAS) to be revised after NRC approval of License Amendment Request 250. Allowable Values for high and high-high containment pressure will be revised to the LTSP values shown on Figures 9.10-1 and 9.10-2. The TRM may also be revised to include the operability limits shown on these diagrams.
- OM 1.1, Conduct of Plant Operations, PBNP Specific. Parametric value for Low Range Containment Pressure has been verified and no changes are required.
- ARP 1-PPCS-018, Priority Alarm Containment Pressure Unit 1. New parametric value for Low Range Containment Pressure PPCS display P-945, P-947, and P-949 need to be incorporated. Passport A/R No. 01046198 will track the generated change to this document.
- ARP 1-PPCS-018, Priority Alarm Containment Pressure Unit 1. New parametric value for Low Range Containment Pressure PPCS display P-945, P-947, and P-949 need to be incorporated. Passport A/R No. 01046198 will track the generated change to this document.

11.0 ATTACHMENT LIST

Attachment A	Instrument Scaling (3 pages)
Attachment B	Walkdown Record Regarding Minor Divisions for Low Range Containment Pressure Indicators (PI-945, PI-947 and PI-949) (2 pages)
Attachment C	Daily Logsheets Changes (2 pages)

12.0 10 CFR 50.59/72.48 REVIEW

For this activity a 10CFR 72.48 screening is not required per FP-E-SE-03, Section 5.3.3.e. The proposed activity does not involve in any manner the dry fuel storage casks, the cask transfer or transport equipment or any ISFI facility monitoring.

A 10 CFR 50.59 screening was prepared under screening number SCR 2006-0104. The screening is summarized as follows:
The calculation is not changing or challenging the design function(s) of the Pressurizer. The uncertainties are used to evaluate setpoints to ensure adequate safety margin exists to protect the Analytical Limit. The calculation does not affect the method of performing or controlling the design function(s) of the Pressurizer Pressure.
The proposed activity of performing calculation PBNP-IC-17 does not adversely affect the design function of an SSC credited in the safety analysis. The calculation is used to ensure SSC's are capable of performing their design function and does not change how the SSC operates.

Instrument Scaling

This calculation has determined Acceptable As-Found Tolerances for all instruments identified in Section 1.5. The following tables illustrate the necessary modifications to calibration procedures P.2 through P.14 to account for these new tolerance values. The area within the bolded box represent the necessary changes, all other fields are provided for convenience only.

1(2)ICP 04.006-2 (Ref. P.3 and P.4)

1(2)PT-945, 947, 949 U1(2)C Low Range Pressure							
Input	**Output**			**As- Found Limits**		**As- Left Limits**	
psig	**Ideal mAdc**	**As-Found mAdc**	**As-Left mAdc**	**Low mAdc**	**High mAdc**	**Low mAdc**	**High mAdc**
0.0	14.00			13.71	14.29	13.80	14.20
9.0	20.00			19.71	20.29	19.80	20.20
24.0	30.00			29.71	30.29	29.80	30.20
39.0	40.00			39.71	40.29	39.80	40.20
54.0	50.00			49.71	50.29	49.80	50.20
39.0	40.00			39.71	40.29	39.80	40.20
24.0	30.00			29.71	30.29	29.80	30.20
9.0	20.00			19.71	20.29	19.80	20.20
0.0	14.00			13.71	14.29	13.80	14.20

1(2)ICP 13.016L (Ref. P.1 and P.2)

1(2)PM-945, 947, 949 Containment Pressure I/I Conv							
Containment Press Input Vdc	**Output**			**As- Found Limits**		**As- Left Limits**	
	Ideal mAdc	**As-Found mAdc**	**As-Left mAdc**	**Low mAdc**	**High mAdc**	**Low mAdc**	**High mAdc**
0.1000	10.00			9.77	10.23	9.90	10.10
0.2000	20.00			19.77	20.23	19.90	20.10
0.3000	30.00			29.77	30.23	29.90	30.10
0.4000	40.00			39.77	40.23	39.90	40.10
0.5000	50.00			49.77	50.23	49.90	50.10

Note: The As-Left Tolerance is changed to 0.250% span per Assumption 5.1.8 to tighten the indicator loop TLE to less than 1 psig.

1(2)ICP 13.016L (Ref. P.1 and P.2)

PI-945, 947, 949 Containment Pressure Indicator							
Output psig	Input			As- Found Limits		As- Left Limits	
	Ideal mAdc	As-Found mAdc	As-Left mAdc	Low mAdc	High mAdc	Low mAdc	High mAdc
-6.00	10.00			9.19	10.81	9.30	10.70
9.00	20.00			19.19	20.81	19.30	20.70
24.00	30.00			29.19	30.81	29.30	30.70
39.00	40.00			39.19	40.81	39.30	40.70
54.00	50.00			49.19	50.81	49.30	50.70
39.00	40.00			39.19	40.81	39.30	40.70
24.00	30.00			29.19	30.81	29.30	30.70
9.00	20.00			19.19	20.81	19.30	20.70
-6.00	10.00			9.19	10.81	9.30	10.70

Note: The As-Left Tolerance is changed to 1.750% span per Assumption 5.1.8 to tighten the indicator loop TLE to less than 1 psig.

1(2)ICP 13.016L (Ref. P.1 and P.2)

1(2)P-945, 947, 949 PPCS Point ID CNMT LR PRESS RED, BLU, WHT							
Input mAdc	Output			As- Found Limits		As- Left Limits	
	Ideal psig	As-Found psig	As-Left psig	Low psig	High psig	Low psig	High psig
10.00	-6.00			-6.30	-5.70	-6.30	-5.70
20.00	9.00			8.70	9.30	8.70	9.30
30.00	24.00			23.70	24.30	23.70	24.30
40.00	39.00			39.70	39.30	39.70	39.30
50.00	54.00			53.70	54.30	53.70	54.30

1(2)ICP 02.001RD, BL, WH (Ref. P.13 through P.18) and 1(2)ICP 02.020RD, BL, WH (Ref. P.21 through P.26)

1(2)PC-945A/B, 947A/B, 949A/B

Containment Pressure

Containment Pressure	Process Setpoint psig	Output (Containment Pressure)			As-Left Limits		As-Found Limits		Operability Limits	
		Setpoint Vdc	As-Found Vdc	As-Left Vdc	Low Vdc	High Vdc	Low Vdc	High Vdc	Low Vdc	High Vdc
Safety Injection	5.0	0.1733↑			0.1723	0.1743	0.1720	0.1746	0.1717	0.1749
Containment Spray Logic	25.0	0.3067↑			0.3057	0.3077	0.3054	0.3080	0.3051	0.3083

• Operability Limits • 1(2)-PC-945A, 947A, 949A ≤ 0.1749 Vdc (≤ 5.24 psig)
(Ref: Calculation PBNP-IC-17)

• Operability Limits • 1(2)-PC-945B, 947B, 949B ≤ 0.3083 Vdc (≤ 25.24 psig)
(Ref: Calculation PBNP-IC-17)

Per Section 9.9, to preserve the validity of this calculation's results, this calculation requires that all future calibrations of the equipment (addressed in this calculation) be performed using the M&TE indicated below (or better). This table needs to be implemented in the indicated calibration procedures to provide the calibrator with a list of acceptable M&TE equipment.

M&TE	Range	Accuracy
Current-to-Current Converters (output) and PPCS (Ref. P.1 and P.2)		
Fluke 45 (fast rate)	0-100 mAdc	± 0.025 mAdc (± 0.05 % RDG + 3 DG)
HP 34401A	0-100 mAdc	±0.030 mAdc (± 0.050 % RDG + 0.005% Range)
Current-to-Current Converters (input) (Ref. P.1 and P.2)		
HP 34401A	0-1.0 Vdc	±0.000027 Vdc (± 0.004 % RDG + 0.0007% Range)
Fluke 45	0-3.0 Vdc	±0.000236 Vdc (± 0.025 % RDG + 2 DG)
Fluke 8842A	0-2.0 Vdc	±0.000025 Vdc (± 0.003 % RDG + 2 DG)

PART 1 - WALKDOWN REQUEST FORM

Calculation No. WEP-SPT-20-02-B; WEP-SPT-29-01-A, WEP-SPT-35-01-A; 2005-0028

Walkdown Location (Bldg/Elev/Room/Column Lines)
Simulator Office

Scope
Determine the minor divisions for the following control room indicators:

Steam Generator pressure
Containment narrow range pressure
Low head SI flow
Containment air temperature (66' elevation)
Containment sump B temperature

References:

Data Tolerance Requirements

S&L Lead Robert L. Marsh Signature Robert Marsh/WAB Date 6-28-05

PART 2 - WALKDOWN DATA COLLECTION FORM

Results

Photographs of the control room indicators listed in Part I were reviewed. The identification numbers span, major divisions, and minor divisions for each indicator are as follows:

Steam Generator Pressure

The indicators checked are 1PI-468, 1PI-469, 1PI-479, 1PI-482A, 1PI-483A, 2PI-468, 2PI-469, 2PI-478, 2PI-479, 2PI-482A, and 2PI-483A. The span is 0 to 1400 psig. The major divisions correspond to 200 psig. The minor divisions correspond to 20 psig.

Containment Narrow Range Pressure

The indicators checked are 1PI-945, 1PI-947, PI-949, 2PI-945, 2PI-947 and 2PI-949. The span is – 6 psig to 54 psig. The major divisions correspond to 10 psig. The minor divisions correspond to 1 psig.

Low Head SI Flow

The indicators checked are 1FI-626A and 2FI-928, 2FI-626A and 2FI-928.

The span for indicators 1FI-626A and 2FI-626A is 0 to 4000 gpm. The major divisions correspond to 1000 gpm. The minor divisions correspond to 100 gpm.

The span for indicators 1FI-928 and 2FI-928 is 0 to 2500 gpm. The major divisions correspond to 500 gpm. The minor divisions correspond to 50 gpm.

Containment Air Temperature (66' Elevation)

The indicators checked are 1TI-3292, 1TI-3293, 2TI-3292, and 2TI-3293. The span is 50°F to 350°F. The major divisions correspond to 50°F. The minor divisions correspond to 5°F.

Containment Sump B Temperature

The indicators checked are 1TI-3294, 1TI-3295, 2TI-3294, and 2TI-3295. The span is 50°F to 350°F. The major divisions correspond to 50°F. The minor divisions correspond to 5°F.

Robert L. Marsh	Robert Marsh / [illegible]	6-28-05
Data Taker Name	Signature	Date
NICK VILLIONE	N. Vil	6/28/05
Independent Verifier Name	Signature	Date

This calculation has determined the Parametric Values for Tech Spec surveillance. The following tables illustrate the necessary modifications to the Control Room Logs (Ref. G.30 and G.31) to account for these new values. The area within the bolded box represent the necessary changes, all other fields are provided for convenience only.

Daily Logsheet

PBF-2034 Rev. 69 Control Room Log – U1

Sequence: 317, 318, 319	Station: 482, 483, 484	Equipment ID: 1PI-945, 947, 949	U-1 Containment Pressure
Minimum: -1.0	Units: PSIG	SI REQUIRED	Location: 44/CB/CR C-01
Maximum: 1.0	MISC: MODE 1,2,3,4,5,6	'TECH SPEC'	Appl DOW: Every

	Shift	Reading	Notes
1	MIDS		
2	DAYS		
3	SWINGS		
4	EXTRA 1		
5	EXTRA 2		
6	EXTRA 3		
7	EXTRA 4		

Special Instructions:
Containment pressure less than 0 psig may result in difficulty obtaining a satisfactory hatch door test.

If containment pressure is greater than 1 psig then ensure containment pressure as read on PPCS P-945, P-947, P-949 ~~or as read by I&C from the instrument racks~~ is less than or equal to ~~1.4 psig~~ *1.3 psig*.
LCO 3.6.4.A, modes 1-4 is not met if the following conditions are true:
-Containment pressure as read on control board instruments indicate greater than 1 psig, AND
-Containment pressure as read on PPCS P-945, P-947, P-949 ~~OR as read by I&C from the instrument racks~~ indicates greater than ~~or equal to 1.4 psig~~ *1.3 psig*, ~~OR if PPCS is NOT available AND I&C is unavailable to read the rack instruments.~~
Reference I&C callup PB0 I&C Miscellaneous Callup PB0-24, Loss of PPCS Data Taking.

Parametric values for modes 1-4, TS acceptance criteria is ~~>= -1 psig minimum and above stated maximum~~.
≥ -1 psig and ≤ 1 psig

Daily Logsheet

PBF-2035 Rev. 69 Control Room Log – U2

Sequence: 318, 319, 320	Station: 465, 467, 468	Equipment ID: 2PI-945, 947, 949		U-1 Containment Pressure
Minimum: -1	Units: PSIG	SI	REQUIRED	Location: 44/CB/CR C-01
Maximum: 1	MISC: MODE 1,2,3,4,5,6		'TECH SPEC'	Appl DOW: Every

	Shift	Reading	Notes
1	MIDS		
2	DAYS		
3	SWINGS		
4	EXTRA 1		
5	EXTRA 2		
6	EXTRA 3		
7	EXTRA 4		

Special Instructions:
Containment pressure less than 0 psig may result in difficulty obtaining a satisfactory hatch door test.

If containment pressure is greater than 1 psig then ensure containment pressure as read on PPCS P-945, P-947, P-949 ~~or as read by I&C from the instrument racks~~ is less than or equal to ~~1.4 psig~~ *1.3 psig*.
LCO 3.6.4.A, modes 1-4 is not met if the following conditions are true:
-Containment pressure as read on control board instruments indicate greater than 1 psig, AND
-Containment pressure as read on PPCS P-945, P-947, P-949 ~~OR as read by I&C from the instrument racks~~ indicates greater than ~~or equal to 1.4 psig~~ *1.3 psig*, ~~OR if PPCS is NOT available AND I&C is unavailable to read the rack instruments~~.
Reference I&C callup PB0 I&C Miscellaneous Callup PB0-24, Loss of PPCS Data Taking.

Parametric values for modes 1-4, TS acceptance criteria is ~~>= -1 psig minimum and above stated maximum.~~
≥ -1 psig and ≤ 1 psig

ENCLOSURE 5

NEXTERA ENERGY POINT BEACH, LLC
POINT BEACH NUCLEAR PLANT, UNITS 1 AND 2

LICENSE AMENDMENT REQUEST 261
EXTENDED POWER UPRATE
RESPONSE TO REQUEST FOR ADDITIONAL INFORMATION

AUXILIARY FEEDWATER PUMP LOW SUCTION PRESSURE
SERVICE WATER SWITCHOVER AND
PUMP TRIP INSTRUMENT LOOP UNCERTAINTY AND SETPOINT CALCULATION

87 pages follow

Table of Contents

1.0 BACKGROUND, PURPOSE, AND SCOPE OF CALCULATION 4
1.1 Background 4
1.2 Purpose 4
1.3 Purpose of This Revision 5
1.4 Scope 5
1.5 Instrumentation Evaluated 6
1.6 Superseded Station Calculations 6
2.0 ACCEPTANCE CRITERIA 7
3.0 ABBREVIATIONS 8
4.0 REFERENCES 9
4.1 General 9
4.2 Drawings 9
4.3 Procedures 10
4.4 Vendor 10
4.5 Calculations 11
5.0 ASSUMPTIONS 12
5.1 Validated Assumptions 12
5.2 Unvalidated Assumptions 13
6.0 DESIGN INPUTS 14
6.1 Loop Definitions 14
6.2 Loop Block Diagram 14
6.3 Component Models and Tag Numbers 15
6.4 Transmitter Operating Spans 16
6.5 Environmental Considerations 16
6.6 Analytical Limit 18
7.0 METHODOLOGY 20
7.1 Uncertainty Determination 20
7.2 As-Found Tolerance Equation Summary 23

Table of Contents

7.3 As-Left Tolerance Equation Summary 26
7.4 Calculated Setpoint (SP) Equation Summary 27
8.0 BODY OF CALCULATION 28
8.1 Device Uncertainty Analysis 28
8.2 Process Error (PE) 49
8.3 Device Uncertainty Summary 50
8.4 Total Loop Error 53
8.5 Acceptable As-Found and As-Left Calibration Tolerances 55
8.6 Setpoint Evaluation 61
9.0 RESULTS AND CONCLUSIONS, WITH LIMITATIONS 66
9.1 Loop Uncertainties 66
9.2 Field Trip Setpoint (FTSP) and Calculated Trip Setpoint (SP) 66
9.3 Acceptable As-Left and As-Found Tolerances 67
9.4 Limitations 67
9.5 Graphical Representation of Revised Setpoints and Tolerances 69
10.0 IMPACT ON PLANT DOCUMENTS 71
11.0 ATTACHMENT LIST 74

1.0 BACKGROUND, PURPOSE, AND SCOPE OF CALCULATION

1.1 Background

ECs 13400 through 13407 installs new MDAFW pumps, modifies controls for the existing TDAFW pumps and converts the existing MDAFW pumps to Standby Steam Generator (SSG) feed pumps. The SSG feed pumps are used in normal startup and shutdowns, receive no automatic start signals and are tripped on signals that would automatically initiate AFW flow.

The new MDAFW pumps will have their own connection to the Condensate Storage Tanks. This connection will be separate from the TDAFW pumps connection to the Condensate Storage Tank.

The Auxiliary Feedwater (AF) System automatically supplies feedwater to the steam generators to remove decay heat from the Reactor Coolant System upon a loss of normal feedwater supply. The AF system consists of two independent pump systems per unit; Motor Driven (MD) AFPs (1P-53 and 2P-53, and steam turbine-driven (TD) AFPs (1P-29 and 2P-29).

The normal source of water for the AFP is the Condensate Storage Tank (CST), and the safety-related supply is the Service Water (SW). The switch from the normal suction supply to the safety related supply is done automatically or manually.

A pressure transmitter is installed on the suction side of each AF pump that monitors AFP suction pressure. This pressure transmitter will initiate the switch to the safety related supply and trip of the pump on low suction pressure if the switchover was not successful to prevent pump damage. Additionally, an alarm before trip function provides annunciation prior to a trip and in the main control room.

The low-low suction SW switchover/pump trip and low suction alarm functions associated with each AFP are provided by a setpoint controlled bistable unit downstream of the Low Suction Pressure Transmitter, which provides a switchover/trip and alarm output. The outputs of each bistable unit are connected to a Time Delay Relay (TDR). The output of the bistable is delayed in order to minimize spurious switchovers/trips caused by normal transient drops in suction pressure during plant startup. The time delay function for the low suction pressure switchover/trip is evaluated in Calculation 97-0211, "AFW Pump Low Suction Pressure Trip Time Delay Relay Uncertainty Calculation".

The AF pump low suction pressure trip is a safety-related function per Passport equipment search.

1.2 Purpose

The purpose of this minor revision is to determine the instrument uncertainties, TDAFW Pump Low Suction Pressure Alarm Setpoint, and Low Suction Pressure Switchover/Pump Trip Setpoint associated with the Turbine-Driven Auxiliary Feedwater Pump (AFP) Low Suction Pressure Switchover/Trip instrument loop.

A subsequent minor revision will be prepared to evaluate the MDAFW pump low suction pressure switchover/trip and alarm uncertainties and setpoints

The low suction pressure trip circuits for the Standby Steam Generator (SSG) pumps are not modified. Uncertainties and setpoints for these circuits determined in revision 2 of this calculation remain valid.

Because the Low Suction Pressure Switchover/Trip is a safety-related function and is required to operate during/after a design basis event, this calculation will determine uncertainties for accident environmental conditions.

The results of this calculation, along with the results of I&C Calculations 97-0211 and PBNP-IC-42, are used as input to Calculation 97-0215 to ensure that sufficient water (including water pumped during the switchover/trip time delay) is available to supply the AFPs to allow an orderly switchover to the safety related supply or automatically trip if the switchover is unsuccessful following a loss of CSTs, thus preventing damage to the pump. (See Section 10.0).

1.3 Purpose of This Revision

This minor revision supports the modifications to the TDAFW low suction pressure switchover/trip circuits in EC-13407. The existing trip/alarm and indication will split into two loops:

1. SW Switchover/Pump Trip and alarm scaled from 0-30 psig (Sections 5.1.5 and 9.4.6).
2. Suction pressure indication scaled from 0-100 psig (Sections 5.1.5 and 9.4.6).

Since the suction pressure indication loops are not Reg. Guide 1.97 Cat 1 Type A variables and since they are no longer a part of the suction pressure trip alarms circuits, their uncertainties and setting tolerances are not addressed in this minor revision. Moreover, the parallel instrumentation legs fed by the pressure transmitters (e.g. control board indication and PPCS input) were not addressed in previous revisions of this calculation.

This minor revision creates imposed conditions of the design of EC-13407

1.4 Scope

The scope of this calculation is listed below:

- Determine uncertainties for the AFP Suction Pressure Switchover/Trip Instrumentation (excluding Time Delay Relay).

- Evaluate the Low Suction Pressure Alarm setpoint and the Low-low Suction Pressure Switchover/Trip Setpoint for the AFP.

- Determine Acceptable As-Found / As-Left Calibration Tolerances for AFP Suction Pressure Instrumentation.

1.5 Instrumentation Evaluated

This calculation evaluates the plant equipment listed in the table below (with the exception of the pumps). See Sections 6.2, 6.3 and 6.4 of this calculation for instrument specifications, parameters, ranges and loop configurations.

Table 1.5-1: Instrumentation List

Pump	Pressure Transmitter	Current-to-Voltage Converter	Voltage-to-Current Converter	Switchover & Trip / Alarm Bistable
1P-29 Steam driven	1PT-4044A	1PQ-4044	1PM-4044-3	1PC-4044-L 1PC-4044-LL
2P-29 Steam driven	2PT-4044A	2PQ-4044	2PM-4044-3	2PC-4044-L 2PC-4044-LL

1.6 Superseded Station Calculations

None

2.0 ACCEPTANCE CRITERIA

This calculation determines the following:

- The adequacy of Limiting Trip Setpoints (LTSP) for the TDAF Low-Low Suction Pressure Pump Switchover/Trip as added by the Extended Power Uprate

  The LTSP is acceptable if the following criteria are met:

  The calculated setpoint (SP) is established to ensure that the instrument channel pump trip initiation, i.e., actuation of the Time Delay Relay (see Calculation 97-0211) occurs before the AL is reached. The SP will be compared to the LTSP to ensure that the LTSP ≤ SP (for increasing process) or the LTSP ≥ SP (for decreasing process).

- The adequacy of existing Field Trip Setpoints (FTSP) for the TDAF Low-Low Suction Pressure Pump Switchover/Trip as added by the Extended Power Uprate

  The FTSP is acceptable if the following criteria are met:

  The calculated setpoint (SP) is established to ensure that the instrument channel pump trip initiation, i.e., actuation of the Time Delay Relay (see Calculation 97-0211) occurs before the AL is reached. The SP will be compared to the FTSP to ensure that the FTSP ≤ SP (for increasing process) or the FTSP ≥ SP (for decreasing process). In addition, the FTSP must provide sufficient margin to ensure that the LTSP is protected.

- The adequacy of existing Field Trip Setpoints (FTSP) for Low Suction Pressure Pump Alarm

  The FTSP is acceptable if the following criteria are met:

  1) The SP will be compared to the FTSP to ensure that the FTSP ≤ SP (for increasing process) or the FTSP ≥ SP (for decreasing process).

  2) The FTSP is 0.5 psig above the AFP Low-Low Suction Pressure Switchover/Trip Setpoint

- Uncertainties for the AFP Suction Pressure Instrumentation

  All uncertainty results are deemed acceptable so long as they are calculated in accordance with Point Beach Nuclear Plant's Instrument Setpoint Methodology (Ref. G.1). Any deviations from this methodology are noted where applicable.

3.0 ABBREVIATIONS

3.1	AL	Analytical Limit
3.2	AF	Auxiliary Feedwater
3.3	AFP	Auxiliary Feedwater Pump
3.4	AV	Allowable Value
3.5	BAF	Bistable As-Found Tolerance
3.6	BAL	Bistable As-Left Tolerance
3.7	COT	Channel Operational Test
3.8	CST	Condensate Storage Tank
3.9	EOP	Emergency Operating Procedures
3.10	FSAR	Final Safety Analysis Report
3.11	FTSP	Field Trip Setpoint
3.12	IVAF	Current-to-Voltage Converter As-Found Tolerance
3.13	IVAL	Current-to-Voltage Converter As-Left Tolerance
3.14	LSSS	Limiting Safety System Setting
3.15	LTSP	Limiting Trip Setpoint
3.16	M&TE	Measurement and Test Equipment
3.17	NPSH	Net Positive Suction Head
3.18	PBNP	Point Beach Nuclear Plant
3.19	PL	Process Limit
3.20	PS	Process Span
3.21	PT	Pressure Transmitter (Section 6.6) /Pressure Tester (remainder of calc)
3.22	RAD	Radiation Absorbed Dose
3.23	SAF	Sensor As-Found Tolerance
3.24	SAL	Sensor As-Left Tolerance
3.25	SP	Calculated Setpoint
3.26	SW	Service Water
3.27	SRSS	Square Root of the Sum of the Squares
3.28	SSG	Standy Steam Generator
3.29	TLE	Total Loop Error
3.30	URL	Upper Range Limit
3.31	VIAF	Voltage-to-Current Converter As-Found Tolerance
3.32	VIAL	Voltage-to-Current Converter As-Left Tolerance

4.0 REFERENCES

The revisions and/or dates of the References per this section are current as of 5/24/2009.

4.1 General

G.1 Point Beach Nuclear Plant Design & Installation Guidelines Manual DG-I01, "Instrument Setpoint Methodology", Rev. 4

G.2 Bechtel Corporation Specification No. 6118-M-40, Rev. 1, "Specification for Heating, Ventilating, and Air Conditioning Controls."

G.3 WCAP-8587, Rev. 6-A, "Methodology for Qualifying Westinghouse WRD Supplied NSSS Safety Related Electrical Equipment", dated March 1983

G.4 Point Beach Nuclear Plant FSAR:

- Section 9.8.1 (dated 2008)
- Section 9.5 (dated 2008)
- Section 11.6.2 (dated 2008)

G.5 Not used.

G.6 Walkdown, Pressure Transmitter Elevation and Pressure Tap Elevation (Attachment A)

G.7 ASME Steam Tables for Industrial Use (Version 1997), Copyright 2000.

G.8 PBF-2032, Rev. 90, "Operations Daily Logsheet"

G.9 WE Letter NPC-28077 to NRC, "Response to NUREG-0737", dated 9/14/81

G.10 Letter NRC 200-0030, dated April 7,2009, "License Amendment 261, Extended Power Uprate"

G.11 Walkdown, ICTI-621 and ICTI-797 Readability (Attachment C)

4.2 Drawings

D.1 Bechtel 6118, Dwg. M-217, Sht. 1, Rev. 84, "P&ID Auxiliary Feedwater System", Point Beach N.P., Unit 1&2

D.2 Bechtel 6118, Dwg. M-217, Sht. 2, Rev. 22, "P&ID Auxiliary Feedwater System", Point Beach N.P., Unit 1&2

D.3 Foxboro 62550, Dwg. CD1-15-1, Rev. 0, "Point Beach N.P., Unit 1 Connection Diagram – Rack 1C171B-F/1C197"

D.4 Foxboro 62550, Dwg. CD2-15-1, Rev. 1, "Point Beach N.P., Unit 2 Connection Diagram – Rack 2C173B-F/2C-197"

D.5 Not Used.
D.6 Not Used.

D.7 977-82, Sheet 10, Rev. 9, "Cable Spreader Room Air Conditioning System Rack C58" (available in Passport as 0082).

4.3 Procedures

P.1 1ICP 04.003-5, Rev. 12, "Auxiliary Feedwater Flow and Pressure Instruments Outage Calibration", 8/30/05

P.2 2ICP 04.003-5, Rev. 13, "Auxiliary Feedwater Flow and Pressure Instruments Outage Calibration", 8/30/05

P.3 1ICP 04.032-1, Rev. 15, "Auxiliary Feedwater System and Charging Flow Electronic Outage Calibration", 11/15/05

P.4 2ICP 04.032-1, Rev. 13, "Auxiliary Feedwater System and Charging Flow Electronic Outage Calibration", 11/15/05

P.5 Not Used.

P.6 Not Used.

P.7 ICI 12, Rev. 8, "Selection of M&TE for Field Calibrations"

4.4 Vendor

V.1 Not Used.

V.2 Foxboro Spec 200 Composite Manual, PBNP VTM # 00580, Rev. 8, Foxboro Technical Information, TI 2AI-130, dated October 1977, "Current-to-Voltage Converters"

V.3 Foxboro Spec 200 Composite Manual, PBNP VTM # 00580, Rev. 8, Foxboro Technical Information, TI 2A0-130, dated October 1977, "Voltage-to-Current Converters, Model 2AO-VAI, Isolated, 4 to 20 mAdc, Adjustable Span & Zero"

V.4 Foxboro Spec 200 Composite Manual, PBNP VTM # 00580, Rev. 8, Foxboro Technical Information, TI 2AP-100, dated March 1977, "Spec 200 Nest Alarms"

V.5 Johnson Controls Temperature Composite Book 2, VTM # 00309B, Rev. 5, dated 8/15/94 – T-4000 Series Pneumatic Room Thermostats (Tab – Thermostats & Thermometers).

V.6 User Guide HP 34401A Multimeter, VTM 01692, Rev. 0

V.7 Rosemount Model 3051N Smart Pressure Transmitter for Nuclear Service, Reference Manual 00809-0100-4808, Rev. CA, June 2008, PBNP VTM # 01826.

4.5 Calculations

C.1 Calculation 97-0172, Rev. 2, "Available Water in Volume of Piping to the Auxiliary Feedwater Pumps Following Pipe Break at Elevation 25-6"

C.2 Calculation 2003-0062, Rev. 2, "AFW Pump NPSH Calculation and Condensate Storage Tank Required Fluid to Prevent Vortexing.", including 2003-0062-002-A and 2003-0062-002-B.

C.3 Calculation No. M-8992-02.TM, "Thermal Modes Evaluation Report for Point Beach-Units 1&2", Appendix L, Rev. 1

5.0 ASSUMPTIONS

5.1 Validated Assumptions

5.1.1 It is assumed that the environmental conditions in the Auxiliary Feedwater Pump Room (in the Control Building) are similar to the conditions inside the Auxiliary Building.

Basis: Section 2.1 of Bechtel Specification 6118-M-40 (Ref. G.2) does not specifically identify environmental conditions for the Auxiliary Feedwater Pump Room. Descriptions of the various plant HVAC systems and their controls are provided in Section 3.0 of Ref. G.2. A comparison of the description of the AF Pump Room ventilation to that of the areas listed in Section 2.1 indicates that the air conditioning features make this area comparable to the Auxiliary Building. Also, a review of PBF-2032 Daily Logsheet, page 59, (Ref. G.8) verifies that the maximum temperature inside the Auxiliary Feedwater Pump Room is the same as the maximum temperature inside the Auxiliary Building.

5.1.2 It is assumed that the maximum temperature (for accident conditions) in the Auxiliary Feedwater Pump Cubicle Area is 120 °F.

Basis: Table 6-1 of WCAP-8587 (Reference G.3) states that "abnormal operating parameters" apply to areas outside of containment when the HVAC System is non-safety related, resulting in a maximum temperature of 120 °F and humidity of 95%.

The Auxiliary Feedwater Pump Area HVAC system is non-safety related (Per Section 9.5 of Ref. G.4). Therefore, 120 °F is used as the maximum operating temperature in the Auxiliary Feedwater Pump Cubicle Area.

5.1.3 It is assumed that the maximum environmental temperature of the Control Room and Computer Room instrumentation is 120 °F.

Basis: Table 6-1 of WCAP-8587 (Reference G.3) states that when the HVAC is non-safety related, a temperature of 120 °F (loss of chiller) should be used. Since the Control Room and Computer Room HVAC System chiller is not powered from an essential power bus, the Control Room and Computer Room HVAC System is considered a non-safety related system.

5.1.4 It is assumed that the As-Left setting tolerances for the instruments evaluated in this calculation are as indicated in the tables below:

Steam Driven Pump Suction Pressure Instrumentation				
Pressure Transmitters 1(2)PT-4044A	**I/V Converters 1(2)PQ-4044**	**V/I Converters 1(2)PM-4044-3**	**Switchover & Trip / Alarm Bistable Units**	
			1(2)PC-4044-LL (Switchover / Trip)	**1(2)PC-4044-L (Alarm)**
± 0.04 mAdc	± 0.050 Vdc	± 0.08 mAdc	± 0.020 Vdc	± 0.03 mAdc

Basis: These As-Left setting tolerance values have historically provided acceptable instrument performance and consistency in the calibration program for similar instruments installed throughout the plant. These values are routinely achievable for the installed instruments, and are consistent with safety limits and test equipment capability. They are currently used in practice at the station, and implemented by calibration procedures P.1 – P.4. As-Found setting tolerances are to be determined in this calculation (see Section 8.5).

5.1.5 It is assumed that documents P.1, P.2, P.3, P.4, D.2, D.3, D.4 and all impacted equipment will be modified to incorporate the changes per EC-13407 and minor revisions of this calculation.

Basis: This minor revision creates an imposed condition for EC 13407 to install the pressure transmitters 1PT-4044A and 2PT-4044A which will function as the switchover/pump trip/alarm pressure transmitters. The transmitters installed by EC 13407 replace the pump trip and alarm functionality of existing transmitters (1PT-4044 and 2PT-4044) ranged from 0 - 100 psig with transmitters ranged from 0-30 psig to recapture uncertainty in order to provide the required CST level and have significant margin in the water volume. The existing transmitters 1PT-4044 and 2PT-4044 are required to provide indication. The results of this calculation are only valid upon installation of the steam driven pump suction pressure instrumentation according to the changes documented in EC 13407 and this minor revision.

5.2 Unvalidated Assumptions

5.2.1 This calculation creates an imposed condition requiring transmitters 1PT-4044A and 2PT-4044A to be installed at an elevation 12.08' or higher and orientation such that the Analytical Limit calculated in Section 6.6 is conservative and remains valid.

6.0 DESIGN INPUTS

6.1 Loop Definitions

The AFP Suction Pressure Instrumentation Loops that are analyzed in this calculation are shown in block diagram format in the figures (below), and are explained in more detail in Sections 6.2 and 6.3.

6.2 Loop Block Diagram

The block diagram below (Fig. 6.2-1) shows the component configuration for the AF loops addressed in this calculation. The block diagram below (Fig. 6.2-2) shows the component configuration for the AF loops in the previous revisions of this calculation.

Although not addressed in this calculation, the time delay relay that succeeds the SW switchover suction pressure bistable in each loop is shown for completeness (these time delay relays are addressed in 97-0211, "AFW Pump Low Suction Pressure Trip Time Delay Relay Uncertainty Calculation"). Other parallel instrumentation legs fed by the pressure transmitters (e.g. control board indication and PPCS input) are not shown, as they are not involved in the Low Suction Pressure Switchover/Alarm/Trip functions addressed in this calculation.

Figure 6.2-1
Steam Driven AF Pump Low Suction Pressure Instrumentation Post EC 13407

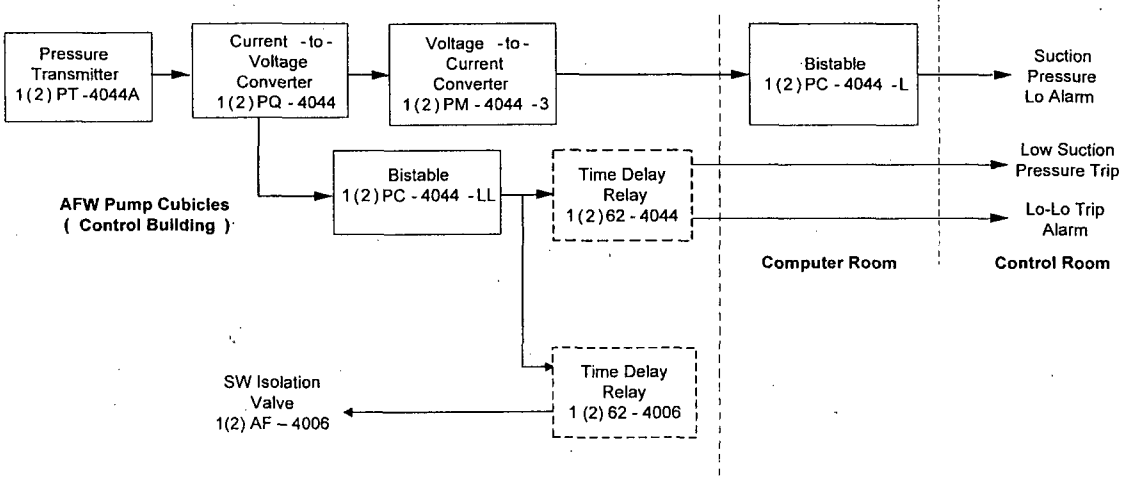

Figure 6.2-2
Steam Driven AF Pump Low Suction Pressure Instrumentation Prior to EC 13407

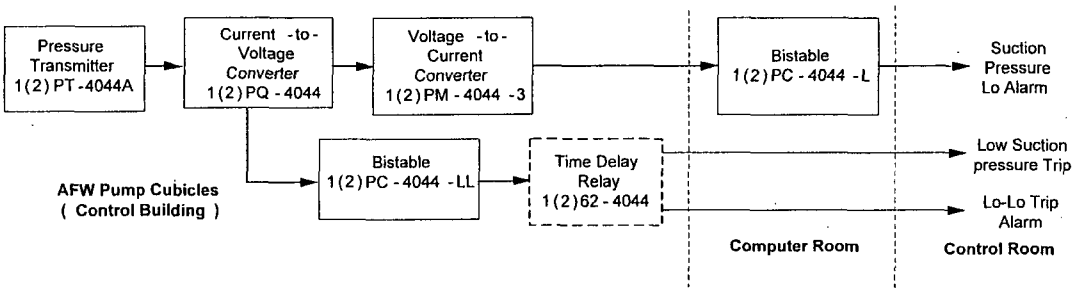

6.3 Component Models and Tag Numbers

The following table identifies each component shown in Figures 6.2-1 for the AFW Pump Low Suction Pressure Switchover/Trip instrument loops, and provides the associated equipment information for use throughout this calculation.

Table 6.3-1: Steam Driven AF Pump Suction Pressure Instrumentation

Component	Model	Equipment Tag Number	Reference(s)
Transmitter	Rosemount 3051NG3A02A1JH2B2	1(2)PT-4044A	V.7, D.3, D.4
Loop Power Supply / Current-to-Voltage Converter	Foxboro N-2AI-I2V	1(2)PQ-4044	D.3, D.4
Voltage-to-Current Converter	Foxboro N-2AO-VAI	1(2)PM-4044-3	D.3, D.4
Bistable Units	Foxboro N-2AP+ALM-AR	1(2)PC-4044-L	D.3, D.4
		1(2)PC-4044-LL	

6.4 Transmitter Operating Spans

The calibrated transmitter range is 0 - 30 psig (Sections 5.1.5 and 9.4.6). The output is a 4-20 mAdc signal (References P.1 and P.2). The Upper Range Limit (URL) is 1000 inH2O (Ref. V.7). The conversion factor from psig to inH2O is determined at 68 °F and 14.7 psia. This is consistent with the standard temperature and pressure used for calibration. Converting the URL from inH2O to psig:

Where 1 psig = 27.729 inH2O

URL = 1000 inH2O * (1 psig / 27.729 inH2O)

URL = 36.063 psig

6.5 Environmental Considerations

Per Ref. G.9, the AF Pump Suction Pressure Trip instrumentation loops are required to trip the corresponding AF Pump when suction pressure is inadequate. This is a pump protection feature used to control switchover from the normal AFP Supply (Condensate Storage Tank) to the alternative supply (Service Water). This function is safety related. The associated Low Suction Pressure Alarm function is not safety related. However, this calculation conservatively treats this function as safety related also.

6.5.1 Control Building (Auxiliary Feed Pump Room)

As shown in Figure 6.2-1 (and per References P.1 – P.4), the Steam Driven Pump Suction Pressure transmitters and rack components (except for 1(2)PC-4044-L) are located in the AF Pump Cubicles in the Control Building.

Accident Conditions

The minimum design temperature for the Auxiliary Building HVAC system (per Section 3.9.h of Ref. G.2) is 60 °F during winter. Therefore, per Assumption 5.1.1, 60 °F is taken as the minimum temperature for the Control Building Aux. Feed Pump Cubicle area.

Per Assumption 5.1.2, accident conditions in the Aux. Feed Pump Cubicle area will not exceed a temperature range of 120 °F, and a maximum relative humidity of 95%. Therefore, a maximum temperature of 120 °F and a maximum humidity of 95% are used for accident environmental conditions in this area.

While the Aux. Feed Pump Cubicle area is subject to the accident conditions described in the previous paragraph, these accident conditions do not include elevated radiation levels, as this area is not part of the Radiologically Controlled Area (RCA) at the station. Therefore, the 40-Year Dose of less than 400 RADs - taken for Normal Conditions - is also applicable to accident environmental conditions for the Aux. Feed Pump Cubicle area.

Table 6.5-1: Aux. Feed Pump Cubicle Area Environmental Conditions

Conditions	Minimum Temp. (°F)	Maximum Temperature (°F)	Humidity (%)	Radiation (RADs)
Accident	60	120	95	Less than 400 (40-year dose)

6.5.2 Main Control Room /Computer Room

The AFP Suction Pressure Instrument rack components for the Low Pressure Alarm Bistable (1(2)PC-4044-L) for the Steam Driven Pumps is located in the Computer Room (Per References P.3 – P.4).

The Control Room HVAC System controls the temperature of the Control Room and the Computer Room at 75 °F per Ref. G.2. Per Reference G.4, the temperature can vary +/-10 °F, resulting in a minimum temperature of 65 °F. This temperature variation is supported by the fact that the Johnson Controls T-4002-202 thermostat (Ref. D.7) in the Control Room is capable of controlling the room temperature (Ref. V.5) within these bounds. In accordance with Section 3.3.4.7 of Reference G.1, a minimum temperature of 65 °F is chosen for the components in the Main Control Room and Computer Room.

Per Assumption 5.1.3, a maximum Control Room /Computer Room temperature of 120 °F is chosen for the subject instrument loops. This maximum temperature corresponds to environmental conditions associated with a loss of the Control Room HVAC cooling unit. The choice of this maximum temperature is justified by the intended function of the AF Pump Suction Pressure Switchover/Trip (i.e. this function is safety related, and is required to operate correctly under compromised environmental conditions caused by a loss of the HVAC cooling unit).

The Control Room humidity of 95 % (95% R.H. due to loss of HVAC chiller) is documented in Table 6-1 of Ref. G.3.

FSAR Section 11.6.2 (fifth paragraph) (Ref. G.4) states that the Control Room is in Zone I and Table 11.6-1 states the maximum dose rate in Zone I is 1.0 mrem/hr.

Table 6.5-2: Control Room Environmental Conditions

Safety Related	Min. Temperature (°F)	Max. Temperature (°F)	Humidity (%)	Radiation (mrem/hr)
	65	120	95	1.0

6.6 Analytical Limit

The elevation in the Auxiliary Feedwater (AF) pump suction pipe at which the low suction pressure alarm /switchover/trip initiation will occur, i.e., actuation of the Time Delay Relay (see Calculation 97-0211) can be determined by the following equation:

EL Trip = (P Trip * CF) + EL PT

where:

EL Trip	= Elevation in the AF pump suction piping where switchover/trip initiation must occur.
P Trip	= Corresponding AF pump low suction switchover/trip initiation pressure.
CF	= Conversion factor from fluid height (ft) to pressure (psig).
EL PT	= Elevation of the AF pump suction pressure transmitters.

The Analytical Limit (AL) is the minimum pressure at which the switchover/trip initiation (actuation of the Time Delay Relay) must occur. This value is also considered P Trip. Therefore, rearranging the above formula to solve for the pressure trip setpoint (P Trip) determines the Analytical Limit:

AL = P Trip = (EL Trip – EL PT) / CF; where $CF = v_{(40^\circ F)} \cdot \frac{144 in.^2}{ft^2}$

Note: The conversion factor (CF) from fluid height to pressure is determined at 40 °F and 14.696 psia. This will result in the most conservative (higher) trip pressure setpoint (Reference G.7).

The AF Pump low suction pressure switchover/trip performs two functions:

1) To protect the pump from low NPSH conditions, and
2) To protect the pump from a loss of suction.

Calculation 2003-0062 (Reference C.2) determines that the lowest possible water level (NPSH) for the AF system is El. 19.8 feet. This height can be considered as the elevation at which the pump protection trip must occur, or EL Trip, to protect the pump from low NPSH conditions.

Calculation 97-0172 (Reference C.1) determines that, in the case of a seismic or tornado induced failure of the suction pipe, a minimum volume of 512 gallons in the protected piping (corresponding to El. 24.17 feet) is available to maintain protection to the AF pumps. This elevation in the AF piping is selected as the point where the switchover/trip initiation must occur. The minimum volume in the protected piping corresponding to EL 24.17 ft is used as an input to Calculation 97-0215 for ensuring that sufficient water (including water pumped during the associated switchover and trip time delays) is

available to supply the AFPs until they automatically switchover/trip, thus preventing damage to the pump (See Section 10.0).

The bounding analytical limit for the pump suction switchover/trip initiation is:

EL Trip = 24.17 ft

Per Reference G.6:

EL 1PT 4044 = 12.08 ft.
EL 2PT 4044 = 12.46 ft.

Note: Because the elevation of the pressure transmitter (EL PT) is subtracted from the elevation of the switchover/trip (EL Trip), and instrument loop instantiates action on decreasing signal (pressure),selecting the lowest elevation will result in a larger difference in height, thus generating a larger pressure value thereby ensuring a more conservative value . Therefore, the Analytical Limit is calculated only for the height of 12.08 ft. The generated value is conservatively utilized for all transmitters. Also, friction drop associated with the Analytical Limit creates a conservative (early) switchover/trip initiation and is therefore ignored in this calculation.

Substituting from above:

P Trip = (EL Trip – EL PT) / CF; $CF = 0.016019\,ft^3/lb \cdot \frac{144in^2}{ft^2}$ (Reference G.7)

P Trip = (24.17 ft – 12.08 ft) / (CF); $CF = 2.30674\ ft \cdot in^2/lb$

P Trip = (12.09 ft) / (2.30674 ft/psig) CF = 2.30674 ft/psig

P Trip = 5.241 psig

From above, P Trip is equal to the Analytical Limit. Therefore:

AL = 5.241 psig

7.0 METHODOLOGY

7.1 Uncertainty Determination

The uncertainties and loop errors are calculated in accordance with Point Beach Nuclear Plant's Instrument Setpoint Methodology, DG-I01 (Ref. G.1). This methodology uses the square root of the sum of the squares (SRSS) method to combine random and independent errors, and algebraic addition of non-random or bias errors. Clarifications to this methodology are noted below:

A) Treatment of 95/95 and 75/75 Values

The use of 95/95 values versus 75/75 values is dependent upon the instrument loop's "category" as defined by Section 3.1 of Ref. G.1. Per Section 3.1 of Reference G.1, the devices evaluated in this calculation are classified as Category A - "RPS / ESF Technical Specification Setpoint Instrument loops and RG 1. 97 Type A". This classification corresponds to a loop uncertainty expressed as a 95/95 value (95% probability at a 95% confidence level).

Based on the Category A classification (and based on the significance of the suction pressure switchover/trip function), the total loop uncertainty will be reported as a 95/95 value.

B) Treatment of Significant Digits and Rounding

This uncertainty calculation will adhere to the rules given below for the treatment of numerical results.

1. For values less than 10^2, the rounding of discrete calculated instrument uncertainties (e.g. reference accuracy, temperature effect, etc.) should be performed such that the numerical value is restricted to three (3) or less digits shown to the right of the decimal point.

   For example, an uncertainty calculated as 0.6847661 should be listed (and carried through the remainder of the calculation) as 0.685.

   An uncertainty calculated as 53.235487 should be listed (and carried through the remainder of the calculation) as 53.235.

2. For values less than 10^3, but greater than or equal to 10^2, the rounding of discrete calculated instrument uncertainties (e.g. reference accuracy, temperature effect, etc.) should be performed such that the numerical value is restricted to two (2) or less digits shown to the right of the decimal point.

   For example, an uncertainty calculated as 131.6539 should be listed (and carried through the remainder of the calculation) as 131.65.

3. For values greater than or equal to 10^3, the rounding of discrete calculated instrument uncertainties (e.g. reference accuracy, temperature effect, etc.) should be performed such that the numerical value is restricted to one (1) or less digits shown to the right of the decimal point.

   For example, an uncertainty calculated as 2251.4533 should be listed (and carried through the remainder of the calculation) as 2251.5.

4. For Total Loop Uncertainties, the calculated result should be rounded to the numerical precision that is readable on the associated loop indication or recorder. If the loop of interest does not have an indicator, the Total Loop Error should be rounded to the numerical precision currently used in the associated calibration procedure for the end device in that loop (e.g. trip unit or alarm unit).

5. For calibration tolerances, the calculated result should be rounded to the numerical precision currently used in the associated calibration procedure.

   These rules are intended to preserve a value's accuracy, while minimizing the retention of insignificant or meaningless digits. In all cases, the calculation preparer shall exercise judgment when rounding and carrying numerical values, to ensure that the values are kept practical with respect to the application of interest.

C) Seismic Considerations (Seismic versus Harsh Environment)

Per Reference C.1, the AF Pump Suction Pressure Transmitters are designed to detect a loss of pump supply water source due to a piping failure, caused by a seismic or tornadic event. Therefore, this calculation considers seismic plant conditions.

Per Reference G.1, Section 3.3.3.10, harsh environments associated with accident / post-accident conditions are not considered coincident to a seismic or tornado event. However, in the case of the AF Pump Suction Pressure Instrument loop, a pump trip protects a safety-related function from a non-safety related piping failure. Since the non-safety related section of AF piping cannot be relied upon to function in the event of an accident, it is reasonable to consider a non-safety related piping failure during or after an accident.

Therefore, this calculation takes exception to Section 3.3.3.10 of Reference G.1 and considers harsh environmental conditions coincidental to a seismic or tornado event.

7.1.1 Sources of Uncertainty

Per Reference G.1, the device uncertainties to be considered for accident and adverse (seismic event) environmental conditions include the following:

Sensor Accuracy	(Sa)
Sensor Drift	(Sd)
Sensor M&TE	(Sm)
Sensor Setting Tolerance	(Sv)
Sensor Power Supply Effect	(Sp)
Sensor Temperature Effect	(St)
Sensor Humidity Effect	(Sh)
Sensor Radiation Effect	(Sr)
Sensor Seismic Effect	(Ss)
Sensor Static Pressure Effect	(Sspe)
Sensor Overpressure Effect	(Sope)
Current-to-Voltage Converter Accuracy	(IVa)
Current-to-Voltage Converter Drift	(IVd)
Current-to-Voltage Converter M&TE	(IVm)
Current-to-Voltage Converter Setting Tolerance	(IVv)
Current-to-Voltage Converter Power Supply Effect	(IVp)
Current-to-Voltage Converter Temperature Effect	(IVt)
Current-to-Voltage Converter Humidity Effect	(IVh)
Current-to-Voltage Converter Radiation Effect	(IVr)
Current-to-Voltage Converter Seismic Effect	(IVs)
Voltage-to-Current Converter Accuracy	(VIa)
Voltage-to-Current Converter Drift	(VId)
Voltage-to-Current Converter M&TE	(VIm)
Voltage-to-Current Converter Setting Tolerance	(VIv)
Voltage-to-Current Converter Power Supply Effect	(VIp)
Voltage-to-Current Converter Temperature Effect	(VIt)
Voltage-to-Current Converter Humidity Effect	(VIh)
Voltage-to-Current Converter Radiation Effect	(VIr)
Voltage-to-Current Converter Seismic Effect	(VIs)
Bistable Accuracy	(Ba)
Bistable Drift	(Bd)
Bistable M&TE	(Bm)
Bistable Setting Tolerance	(Bv)
Bistable Power Supply Effect	(Bp)
Bistable Temperature Effect	(Bt)
Bistable Humidity Effect	(Bh)
Bistable Radiation Effect	(Br)
Bistable Seismic Effect	(Bs)
Process Error	(PE)
Bias Terms	(Bias)

Per Section 3.3.3.13 of Reference G.1, the uncertainties listed above are considered 2 sigma (95% probability/95% confidence) unless otherwise specified.

7.1.2 Total Loop Error Equation Summary (TLE)

The general equation for total instrument loop error is found in Ref. G.1. This methodology uses the square root of the sum of the squares (SRSS) method to combine the applicable random and independent errors, and algebraic addition of non-random or bias errors (of like sign).

7.1.2.1 Steam Driven Pump Switchover/Trip Total Loop Error ($TLE_{SWITCHOVER/TRIP\text{-}STEAM}$)

Per Figure 6.2-1, the total loop error for the steam driven pump suction pressure switchover/trip function contains the uncertainties for the Sensor, Current-to-Voltage Converter, and Bistable:

$$TLE_{SWITCHOVER/TRIP-STEAM} = \pm\sqrt{\begin{array}{l} Sa^2 + IVa^2 + Ba^2 + Sd^2 + IVd^2 + Bd^2 + Sm^2 + VIm^2 + Bm^2 + Sv^2 \\ + VIv^2 + Bv^2 + Sp^2 + IVp^2 + Bp^2 + St^2 + IVt^2 + Bt^2 + Sh^2 + IVh^2 \\ + Bh^2 + Sr^2 + IVr^2 + Br^2 + Ss^2 + IVs^2 + Bs^2 + Sspe^2 + Sope^2 \end{array}} \pm \text{Bias}$$

7.1.2.2 Steam Driven Pump Alarm Total Loop Error ($TLE_{ALARM\text{-}STEAM}$)

Per Figure 6.2-1, the total loop error for the steam driven pump low suction pressure alarm function contains the uncertainties for the Sensor, Current-to-Voltage Converter, Voltage-to-Current Converter, and Bistable:

$$TLE_{ALARM-STEAM} = \pm\sqrt{\begin{array}{l} Sa^2 + IVa^2 + VIa^2 + Ba^2 + Sd^2 + IVd^2 + VId^2 + Bd^2 + Sm^2 + IVm^2 \\ + VIm^2 + Bm^2 + Sv^2 + IVv^2 + VIv^2 + Bv^2 + Sp^2 + IVp^2 + VIp^2 + Bp^2 \\ + St^2 + IVt^2 + VIt^2 + Bt^2 + Sh^2 + IVh^2 + VIh^2 + Bh^2 + Sr^2 + IVr^2 \\ + VIr^2 + Br^2 + Ss^2 + IVs^2 + VIs^2 + Bs^2 + Sspe^2 + Sope^2 \end{array}} \pm \text{Bias}$$

7.2 As-Found Tolerance Equation Summary

As-Found Tolerances are calculated independently for each of the loop components. The equations shown are adapted from Section 3.3.8.6 of Reference G.1 for use in this calculation.

7.2.1 Sensor As-Found Tolerance (SAF)

The acceptable As-Found Tolerance for the Sensor (SAF) is calculated using the following equation:

$$SAF = \pm \sqrt{Sv^2 + Sd^2 + Sm^2}$$

where:

Sv = Sensor Setting Tolerance

Sd = Sensor Drift

Sm = Sensor M&TE error

7.2.2 Current-to-Voltage As-Found Tolerance (IVAF)

The acceptable As-Found Tolerance for the Current-to-Voltage Converter (IVAF) is calculated using the following equation:

$$IVAF = \pm \sqrt{IVv^2 + IVd^2 + IVm^2}$$

where:

IVv = Current-to-Voltage Converter Setting Tolerance

IVd = Current-to-Voltage Converter Drift

IVm = Current-to-Voltage Converter M&TE error

7.2.3 Voltage-to-Current As-Found Tolerance (VIAF)

The acceptable As-Found Tolerance for the Voltage-to-Current Converter (VIAF) is calculated using the following equation:

$$VIAF = \pm \sqrt{VIv^2 + VId^2 + VIm^2}$$

where:

VIv = Voltage-to-Current Converter Setting Tolerance

VId = Voltage-to-Current Converter Drift

VIm = Voltage-to-Current Converter M&TE error

7.2.4 Bistable As-Found Tolerance (BAF)

The acceptable As-Found Tolerance for the Bistable (BAF) is calculated using the following equation:

$$BAF = \pm \sqrt{Bv^2 + Bd^2 + Bm^2}$$

where:

Bv = Bistable Setting Tolerance

Bd = Bistable Drift

Bm = Bistable M&TE error

7.3 As-Left Tolerance Equation Summary

As-Left Tolerances are calculated independently for each of the loop components. The equations shown are adapted from Section 3.3.8.6 of Reference G.1 for use in this calculation.

7.3.1 Sensor As-Left Tolerance (SAL)

The As-Left Tolerance for the Sensor (SAL) is equal to its setting tolerance:

$SAL = \pm Sv$

Where:

Sv = Sensor Setting Tolerance

7.3.2 Current-to-Voltage Converter As-Left Tolerance (IVAL)

The As-Left Tolerance for the Current-to-Voltage Converter (IVAL) is equal to its setting tolerance:

$IVAL = \pm IVv$

Where:

IVv = Current-to-Voltage Converter Setting Tolerance

7.3.3 Voltage-to-Current Converter As-Left Tolerance (VIAL)

The As-Left Tolerance for the Voltage-to-Current Converter (VIAL) is equal to its setting tolerance:

$VIAL = \pm VIv$

Where:

VIv = Voltage-to-Current Converter Setting Tolerance

7.3.4 Bistable As-Left Tolerance (BAL)

The As-Left Tolerance for the Bistable (BAL) is equal to its setting tolerance:

$BAL = \pm Bv$

Where:

Bv = Bistable Setting Tolerance

7.4 Calculated Setpoint (SP) Equation Summary

Per Section 3.3.8.4 of Reference G.1, when a setpoint is approached from one direction and the uncertainties are normally distributed, a reduction factor of 1.645/1.96 = 0.839 may be applied to a 95/95 (95% probability at a 95% confidence level) TLE. The reduction factor should only be applied to the random portion of the TLE that has been statistically derived using the SRSS method. Therefore, this calculation expands upon the methodology of DG-I01 (Reference G.1), and separates the TLE into random and bias terms in order to apply the reduction factor solely to the random portion of the TLE.

For a process increasing toward the analytical limit, the calculated Setpoint is as follows:

$$SP\uparrow = AL + [(0.839)^* TLE_{rdm}^- + TLE_{bias}^-]PS \qquad \text{(Eq. 7.4-1)}$$

For a process decreasing from normal operation toward the analytical limit, the calculated Limiting Trip Setpoint is determined as follows:

$$SP\downarrow = AL + [(0.839)^* TLE_{rdm}^+ + TLE_{bias}^+]PS \qquad \text{(Eq. 7.4-2)}$$

Using the setpoint acceptance criteria prescribed in Section 2.0 for a decreasing setpoint.

$$LTSP \geq SP$$

The FTSP including the required margin to protect the LTSP is determined as follows:

$$Margin = LTSP - FTSP \qquad \text{(Eq. 7.4-3)}$$

8.0 BODY OF CALCULATION

8.1 Device Uncertainty Analysis

This section will determine all applicable uncertainties for the devices that comprise the AF Pump Suction Pressure Alarm/ Switchover/Trip functions shown in Figures 6.2-1 and 6.2-2.

Per References P.1 through P.4, all components in the loop are separately calibrated.

8.1.1 Sensor Accuracy (Sa)

Per Reference V.7, the reference accuracy of the transmitter is ± 0.075 % calibrated span from 1:1 to 10:1 Range Down Factor. This includes combined effects of terminal-based linearity, hysteresis and repeatability.

Sa = ± 0.075 % span

8.1.2 Sensor Drift (Sd)

Per Reference V.7, the drift value for the transmitters is ± 0.2 % URL for 30 months. Per References P.1 and P.2 the transmitters are calibrated every 18 months (or 22.5 months based on 25% extension). As such, the vendor specified thirty month drift value bounds the calibration frequency. Per Section 6.4, the calibrated span is 0 – 30 psig and the URL is 36.063 psig. As such, the drift value in terms of span is calculated below.

Sd = (± 0.20 % * URL) / span

Sd =(± 0.20% * 36.063 psig) / 30 psig

Sd = ± 0.240 % span

8.1.3 Sensor M&TE (Sm)

Per References P.1 and P.2, the transmitters are calibrated with the "Fluke Model 45, HP 34401A, or equivalent multimeter approved for current use on a 10.0 – 50 mAdc per ICI 12, Selection of M&TE for Field Calibrations." References P.1 and P.2 do not provide a required tolerance for a pressure tester with a range of 0 – 30 psig. Therefore, the ICI 12 Microsoft Access Data Base has been reviewed for an appropriate device per the requirements of References P.7 and G.1. M&TE uncertainties are calculated separately for the multimeter and pressure tester, and combined to find the total M&TE uncertainty associated with the calibration of the pressure transmitters.

Per References P.1 and P.2, either the Fluke Model 45, HP 34401A or an approved equivalent multimeter shall be used for calibration. Therefore, the uncertainties calculated for the Fluke Model 45 and HP 34401A will envelope

the uncertainties of any other multimeter permitted for use under References P.1 and P.2. Per ICI 12 ("Selection of M&TE for Field Calibrations"- Ref. P.7). There are 2 devices suited for use as a pressure tester with a range comparable to the instrument tested.

Per P.7 the accuracy of the Aschcroft and McDaniels gauges are ± 0.25 % Full Scale and ± 0.25 % Full Scale, respectively. Per G.11, the least significant digit of ICTI-621 is 3 digits to the right of the decimal. Therefore, the readability is + 0.001 psig. Per G.1 Section 3.3.4.4, the reading error associated with M&TE that employs an analog (graduated) scale, the associated uncertainty in this reading is ± ¼ of the smallest division. Per G.1 Section 3.3.5.3 is divisions are more closely spaced, ± 50% of the difference between divisions may be more appropriate. Per G.11, the minor division of the McDaniels gauge is 0.1 psig and should be considered closely spaced. Due to the close spacing ± 50% of the difference between divisions will be used to calculate the readability which is conservative, and therefore acceptable.

Per G.1 Section 3.3.4.4 of Reference G.1 based on the practices observed by the station, Calibration Standard Error (RAstd) is considered negligible.

Each of the equipment device uncertainties is calculated below:

Multimeter (Output M&TE):

<u>For the Fluke 45 multimeter (30 mA range, 5 digit display)</u>:

RA_{mte} = uncertainty * maximum reading
RA_{mte} = ± 0.05 % reading * 20 mAdc
RA_{mte} = ± 0.01 mAdc

RA_{std} = 0

RD_{mte} = ± 3 DGTS * 0.001 mAdc
RD_{mte} = ± 0.003 mAdc

From Section 3.3.4.4 of Reference G.1, M&TE uncertainty is calculated using the following equation:

$$m = \pm\sqrt{RA^2_{mte} + RA^2_{std} + RD^2_{mte}}$$

$$Sm_{MM\text{-}45} = \pm\sqrt{0.01^2 + 0^2 + 0.003^2} = \pm 0.0104 \text{ mAdc}$$

<u>HP 34401A multimeter (6.5 digit display, 100 mAdc range) (Ref. V.6)</u>

RA_{mte} = ± (0.050 % reading + 0.005 % range)
RA_{mte} = ± [0.050 % (20 mAdc) + 0.005 % (100 mAdc)]

RA_{mte} = ± 0.015 mAdc

RA_{std} = 0

RD_{mte} = ± 0.0001 mAdc

From Section 3.3.4.4 of Reference G.1, M&TE uncertainty is calculated using the following equation:

$$m = \pm\sqrt{RA^2_{mte} + RA^2_{std} + RD^2_{mte}}$$

$$Sm_{HP} = \pm\sqrt{0.015^2 + 0^2 + 0.0001^2} = \pm 0.015 \text{ mAdc}$$

The worst case and bounding output M&TE error is Sm_{HP} = ±0.015 mAdc.

Converting to % span:

Sm_{HP} = ± 0.015 mAdc * (100 % span / 16 mAdc)

Sm_{HP} = ± 0.094 % span

Pressure Testers (Input M&TE):

For the Ashcroft 452074SD02L 30 psig digital gauge

RA_{mte} = uncertainty * instrument range
RA_{mte} = ± 0.25 % full scale * 30 psig
RA_{mte} = ± 0.075 psig

RA_{std} = 0

RD_{mte} = ± 0.001 psig

From Section 3.3.4.4 of Reference G.1, M&TE uncertainty is calculated using the following equation:

$$Sm_{PT\text{-}Ashcroft} = \pm\sqrt{0.075^2 + 0^2 + 0.001^2} = \pm 0.075 \text{ psig}$$

For the McDaniels 30 psig gauge

RA_{mte} = uncertainty * instrument range
RA_{mte} = ± 0.5 % full scale * 30 psig
RA_{mte} = ± 0.15 psig

RA_{std} = 0

RD_{mte} = ± 50% of the difference between divisions
RD_{mte} = ±0.5*0.1 psig
RD_{mte} = ± 0.05 psig

From Section 3.3.4.4 of Reference G.1, M&TE uncertainty is calculated using the following equation:

$$Sm_{PT\text{-}Ashcroft} = \pm\sqrt{0.15^2 + 0^2 + 0.05^2} = \pm 0.158 \text{ psig}$$

The worst case and bounding input M&TE error is $Sm_{MCDaniels}$ = ± 0.158 psig.

Converting to % span:

Sm_{PT} = ± 0.158 psig * (100 % span / 30 psig)

Sm_{PT} = ± 0.527 % span

The total M&TE uncertainty for the calibration of the pressure transmitter is calculated using the multiple M&TE equation given in Section 3.3.4.4 of Reference G.1:

$$Sm = \pm\sqrt{Sm_{HP}^{\ 2} + Sm_{PT}^{\ 2}}$$

$$Sm = \pm\sqrt{0.094^2 + 0.527^2}$$

Sm = ± 0.535 % span

8.1.4 Sensor Setting Tolerance (Sv)

Per Assumption 5.1.4, pressure transmitters 1PT-4044A and 2PT-4044A have a setting tolerance of ± 0.04 mAdc.

<u>For 1(2)PT-4044A</u>:

Sv_{steam} = ± 0.04 mAdc * (100 % span / 16 mAdc)

Sv_{steam} = ± 0.25 % span

8.1.5 Sensor Power Supply Effect (Sp)

Per Reference V.2, the Current-to-Voltage Converters provide +24 Vdc to the transmitters via an internal dc-to-dc converter, which is supplied from the Spec

200 system 30 Vdc nest field bus. The rack power supply is a regulated ± 15 Vdc ± 5% power supply with an output voltage variation of:

(± 5% * 30 Vdc / 100 %) = ± 1.5 Vdc

Per Reference V.7, the transmitter has a power supply effect of less than ± 0.005% span per voltage change.

Sp = ± (0.005 % span / voltage change) * 1.5 Vdc

Sp = ± 0.0075 % span

8.1.6 Sensor Temperature Effect (St)

Per Reference V.7, the transmitter has a temperature effect of ± (0.0125 % URL + 0.0625 % span) from 1:1 to 5:1 per 50 °F (28 °C) ambient temperature change.

Per Section 6.5.1, the temperature range in the Auxiliary Feedwater Pump Cubicles (Control Building) is 60 °F to 120 °F. Therefore, the maximum temperature change for accident conditions is 60 °F.

St = ± [(0.0125 % * (36.063 psig / 30 psig) + (0.0625 %)] * (60 °F / 100 °F)

St = ± 0.047 % span

8.1.7 Sensor Humidity Effect (Sh)

Per Ref. V.7, the Rosemount 3051N will function correctly under 0 % - 100% relative humidity.

Per Section 6.5.1, the humidity in the Auxiliary Feedwater Pump Cubicles (Control Building) is 95%. This humidity is bounded by the humidity range specified by the vendor. Therefore,

Sh = ± 0.0 % span

8.1.8 Sensor Radiation Effect (Sr)

Per Section 6.5.1, the AF Pump Cubicle Area is outside the Radiologically Controlled Area (RCA), and is not subject to high radiation levels during accident conditions. Further, per Section 3.3.3.21 of Ref. G.1, radiation errors are typically small when compared with other instrument uncertainties, and are adjusted out at every instrument calibration. Therefore,

Sr = ± 0.0 % span

8.1.9 Sensor Seismic Effect (Ss)

Per Section 7.1.C, seismic uncertainties must be considered in this calculation. Reference V.7 indicates a seismic effect for the transmitter of ± 0.75 % URL during and ± 0.25 % of the span after seismic event. Per Section 6.4, the transmitter URL is 36.063 psig and the calibrated span is 30 psig. The uncertainty is calculated using the value during a seismic event to achieve a conservative result.

Ss = ± (0.75 % * 36.063 psig) * (100 % span / 30 psig)

Ss = ± 0.902 % span

8.1.10 Sensor Static Pressure Effect (Sspe)

Per Reference G.1, Section 3.3.4.11, static pressure effects due to change in process pressure only apply to differential pressure instruments in direct contact with the process. Therefore,

Sspe = ± 0.0 % span

8.1.11 Sensor Overpressure Effect (Sope)

The normal supply to the AF pumps is the CSTs which are vented tanks (Reference D.1). If the supply is switched to Service Water (due to a seismic event), the suction pressure would be 120 psig (Reference C.3). Per Reference V.7, the overpressure limit is 3626 psig and when exceed will cause a zero shift of ± 0.25 % URL for the Rosemount 3051N range code 3 transmitters. Since the pressure of the normal and alternate AF pump water sources is well below the maximum overpressure rating, the transmitter overpressure effect is considered to be negligible.

Sope = ± 0.0 % span

8.1.12 Current-to-Voltage Converter Accuracy (IVa)

Per Reference V.2, the Current-to-Voltage Converter Accuracy is ± 0.25 % of the output span.

IVa = ± 0.25 % span

8.1.13 Current-to-Voltage Converter Drift (IVd)

Per Reference V.2, the vendor does not specify a drift value for the IV converter. Per Section 3.3.3.15 of Ref. G.1, in the absence of an appropriate drift analysis and when drift is unspecified by the vendor, the instrument's accuracy is used as the instrument drift over the entire calibration period.

IVd = ± 0.25 % span

8.1.14 Current-to-Voltage Converter M&TE (IVm)

Per References P.3 through P.4, the Current-to-Voltage Converter is calibrated with a multimeter capable of measuring 0-10 Vdc (output M&TE) and 4-20 mAdc (input M&TE). Therefore, M&TE uncertainties are calculated separately for each of the multimeters, and combined to find the total M&TE uncertainty associated with the calibration of the IV converter.

Per G.1 Section 3.3.4.4 of Reference G.1 based on the practices observed by the station, Calibration Standard Error (RAstd) is considered negligible.

Per ICI 12 ("Selection of M&TE for Field Calibrations"- Ref. P.7), there are 2 devices that meet the required criteria for the output M&TE, and 2 devices that meet the required criteria for the input M&TE. Each of the equipment device uncertainties is calculated below:

Multimeter (Output M&TE):

<u>HP 34401A multimeter (6.5 digit display, 10.0 Vdc range) (Ref. V.6)</u>

RA_{mte} = ± (0.0035 % reading + 0.0005 % range)
RA_{mte} = ± [0.0035 % (10 Vdc) + 0.0005 % (10 Vdc)]
RA_{mte} = ± 0.0004 Vdc

RA_{std} = 0

RD_{mte} = ± 0.00001 Vdc

From Section 3.3.4.4 of Reference G.1, M&TE uncertainty is calculated using the following equation:

$$m = \pm\sqrt{RA^2_{mte} + RA^2_{std} + RD^2_{mte}}$$

$$IVm_{HP} = \pm\sqrt{0.0004^2 + 0^2 + 0.00001^2} = \pm 0.0004 \text{ Vdc}$$

<u>Fluke 45 multimeter (5 digit display, 10 Vdc range)</u>

RA_{mte} = ± 0.025% reading
RA_{mte} = ± 0.025% reading * 10 Vdc
RA_{mte} = ± 0.0025 Vdc

RA_{std} = 0

RD_{mte} = ± 6 DG * 0.001 Vdc

RD_{mte} = ± 0.006 Vdc

From Section 3.3.4.4 of Reference G.1, M&TE uncertainty is calculated using the following equation:

$$m = \pm\sqrt{RA^2_{mte} + RA^2_{std} + RD^2_{mte}}$$

$$IVm_{45} = \pm\sqrt{0.0025^2 + 0^2 + 0.006^2} = \pm 0.0065\,Vdc$$

The worst case and bounding output M&TE error is IVm_{45} = ±0.0065 Vdc.

Converting to % span:

IVm_{45} = ± 0.0065 Vdc * (100 % span / 10 Vdc)

IVm_{45} = ± 0.065 % span

Multimeter (Input M&TE):

<u>For the Fluke 45 multimeter (30 mA range, 5 digit display)</u>:

RA_{mte} = uncertainty * maximum reading
RA_{mte} = ± 0.05 % reading * 20 mAdc
RA_{mte} = ± 0.01 mAdc

RA_{std} = 0

RD_{mte} = ± 3 DGTS * 0.001 mAdc
RD_{mte} = ± 0.003 mAdc

From Section 3.3.4.4 of Reference G.1, M&TE uncertainty is calculated using the following equation:

$$m = \pm\sqrt{RA^2_{mte} + RA^2_{std} + RD^2_{mte}}$$

$$IVm_{45} = \pm\sqrt{0.01^2 + 0^2 + 0.003^2} = \pm 0.0104\ mAdc$$

<u>HP 34401A multimeter (6.5 digit display, 100 mAdc range) (Ref. V.6)</u>

RA_{mte} = ± (0.050 % reading + 0.005 % range)
RA_{mte} = ± [0.050 % (20 mAdc) + 0.005 % (100 mAdc)]
RA_{mte} = ± 0.015 mAdc

RA_{std} = 0

RD_{mte} = ± 0.0001 mAdc

From Section 3.3.4.4 of Reference G.1, M&TE uncertainty is calculated using the following equation:

$$m = \pm\sqrt{RA^2_{mte} + RA^2_{std} + RD^2_{mte}}$$

$$IVm_{HP} = \pm\sqrt{0.015^2 + 0^2 + 0.0001^2} = \pm 0.015 \text{ mAdc}$$

The worst case and bounding output M&TE error is $IVm_{HP} = \pm 0.015$ mAdc.

Converting to % span:

IVm_{HP} = ± 0.015 mAdc * (100 % span / 16 mAdc)

IVm_{HP} = ± 0.094 % span

The total M&TE uncertainty for the calibration of the current-to-voltage converter is calculated using the multiple M&TE equation given in Section 3.3.4.4 of Reference G.1:

$$IVm = \pm\sqrt{IVm_{45}^{\ 2} + IVm_{HP}^{\ 2}}$$

$$IVm = \pm\sqrt{0.065^2 + 0.094^2}$$

IVm = ± 0.114 % span

8.1.15 Current-to-Voltage Converter Setting Tolerance (IVv)

Per Assumption 5.1.4 and References P.3 through P.4, the Current-to-Voltage Converter Setting Tolerance is ± 0.05 Vdc.

IVv = calibration tolerance * (100% span / calibrated span)
IVv = ± 0.05 Vdc * (100% span /10 Vdc)

IVv = ± 0.5 % span

8.1.16 Current-to-Voltage Converter Power Supply Effect (IVp)

Per Reference V.2, the Current-to-Voltage Converter has a supply voltage effect of ± 0.2 % of span for a ± 5 % change in input voltage. As noted in Section 8.1.5, a ± 5% Vdc power supply change is considered. Therefore,

IVp = ± 0.2 % span

8.1.17 Current-to-Voltage Converter Temperature Effect (IVt)

Per Reference V.2, the Current-to-Voltage Converter Temperature Effect is ± 0.5 % of output span maximum for a 50 °F change within normal operating limits of 40 °F to 120 °F.

Per Section 6.5.1, the Current-to-Voltage converters employed in the Steam Driven AF Pump Suction Pressure Switchover/Trip/Alarm loops are located in the AF Pump Cubicles (Control Building).

Steam Driven Loop IV Converters (IVt_{steam})

Per Section 6.5.1, the temperature range in the Auxiliary Feedwater Pump Cubicles (Control Building) is 60 °F to 120 °F. Therefore, the maximum temperature change for accident conditions is 60 °F.

IVt_{steam} = ± (0.5 % * 10 Vdc) * (60 °F / 50 °F)
IVt_{steam} = ± (0.05 Vdc) * (1.2)
IVt_{steam} = ± 0.06 Vdc

Converting to % span:

IVt_{steam} = ± 0.06 Vdc * (100 % span / 10 Vdc)

IVt_{steam} = ± 0.6 % span

8.1.18 Current-to-Voltage Converter Humidity Effect (IVh)

Per Section 6.5.1, the Current-to-Voltage converters employed in the Steam Driven AF Pump Suction Pressure Switchover/Trip/Alarm loops are located in the AF Pump Cubicles (Control Building).

Per Section 3.3.3.20 of Ref. G.1, humidity effects should be incorporated when provided by the vendor. Otherwise, changes in humidity are assumed to have a negligible effect on the instrument uncertainty.

Per Ref. V.2, the vendor does not specify a humidity effect for the IV converters. Therefore,

IVh = ± 0.0 % span

8.1.19 Current-to-Voltage Converter Radiation Effect (IVr)

Per Section 6.5.1, the Current-to-Voltage converters employed in the Steam Driven AF Pump Suction Pressure Switchover/Trip/Alarm loops are located in the AF Pump Cubicles (Control Building).

Steam Driven Loop IV Converters (IVr_{steam})

Per Section 6.5.1, the radiation level in the Auxiliary Feedwater Pump Cubicles (Control Building) 400 RADs (40 year dose).

Per Section 6.5.1, the AF Pump Cubicle Area is outside the Radiologically Controlled Area (RCA), and is not subject to high radiation levels during accident conditions. Further, per Section 3.3.3.21 of Ref. G.1, radiation errors are typically small when compared with other instrument uncertainties, and are adjusted out at every instrument calibration. Therefore,

IVr_{steam} = ± 0.0 % span

8.1.20 Current-to-Voltage Converter Seismic Effect (IVs)

Per Section 3.3.4.10 of Reference G.1, the effects of seismic or vibration events for non-mechanical instrumentation are considered zero unless vendor or industry experience indicates otherwise.

The vendor does not report a seismic effect for the Current-to-Voltage Converter (Reference V.2). Therefore,

IVs = ± 0.0 % span

8.1.21 Voltage-to-Current Converter Accuracy (VIa)

Per Reference V.3, the Voltage-to-Current Converter Accuracy is ± 0.5 % of output span.

VIa = ± 0.5 % span

8.1.22 Voltage-to-Current Converter Drift (VId)

Per Reference V.3, the vendor does not specify a drift value for the V/I converter. Per Section 3.3.3.15 of Ref. G.1, in the absence of an appropriate drift analysis and when drift is unspecified by the vendor, the instrument's accuracy is used as the instrument drift over the entire calibration period.

VId = ± 0.5 % span

8.1.23 Voltage-to-Current Converter M&TE (VIm)

Per Reference P.3 – P.4, the Voltage-to-Current Converter is calibrated with a multimeter capable of measuring 4-20 mAdc (output M&TE) and 0-10 Vdc (input M&TE). Therefore, M&TE uncertainties are calculated separately for each of the multimeters, and combined to find the total M&TE uncertainty associated with the calibration of the VI converter.

Per G.1 Section 3.3.4.4 of Reference G.1 based on the practices observed by the station, Calibration Standard Error (RAstd) is considered negligible.

Per ICI 12 ("Selection of M&TE for Field Calibrations"- Ref. P.7), there are 2 devices that meet the required criteria for the output M&TE, and 2 devices that meet the required criteria for the input M&TE. Each of the equipment device uncertainties is calculated below:

Multimeter (Output M&TE):

For the Fluke 45 multimeter (30 mA range, 5 digit display):

RA_{mte} = uncertainty * maximum reading
RA_{mte} = ± 0.05 % reading * 20 mAdc
RA_{mte} = ± 0.01 mAdc

RA_{std} = 0

RD_{mte} = ± 3 DGTS * 0.001 mAdc
RD_{mte} = ± 0.003 mAdc

From Section 3.3.4.4 of Reference G.1, M&TE uncertainty is calculated using the following equation:

$$m = \pm\sqrt{RA^2_{mte} + RA^2_{std} + RD^2_{mte}}$$

$$VIm_{MM\text{-}45} = \pm\sqrt{0.01^2 + 0^2 + 0.003^2} = \pm 0.0104 \text{ mAdc}$$

HP 34401A multimeter (6.5 digit display, 100 mAdc range) (Ref. V.6)

RA_{mte} = ± (0.050 % reading + 0.005 % range)
RA_{mte} = ± [0.050 % (20 mAdc) + 0.005 % (100 mAdc)]
RA_{mte} = ± 0.015 mAdc

RA_{std} = 0

RD_{mte} = ± 0.0001 mAdc

From Section 3.3.4.4 of Reference G.1, M&TE uncertainty is calculated using the following equation:

$$m = \pm\sqrt{RA^2_{mte} + RA^2_{std} + RD^2_{mte}}$$

$$VIm_{HP} = \pm\sqrt{0.015^2 + 0^2 + 0.0001^2} = \pm 0.015 \text{ mAdc}$$

The worst case and bounding output M&TE error is VIm_{HP} = ±0.015 mAdc.

Converting to % span:

VIm_{HP} = ± 0.015 mAdc * (100 % span / 16 mAdc)

VIm_{HP} = ± 0.094 % span

Multimeter (Input M&TE):

HP 34401A multimeter (6.5 digit display, 10.0 Vdc range) (Ref. V.6)

RA_{mte} = ± (0.0035 % reading + 0.0005 % range)
RA_{mte} = ± [0.0035 % (10 Vdc) + 0.0005 % (10 Vdc)]
RA_{mte} = ± 0.0004 Vdc

RA_{std} = 0

RD_{mte} = ± 0.00001 Vdc

From Section 3.3.4.4 of Reference G.1, M&TE uncertainty is calculated using the following equation:

$$m = \pm\sqrt{RA^2_{mte} + RA^2_{std} + RD^2_{mte}}$$

$$VIm_{HP} = \pm\sqrt{0.0004^2 + 0^2 + 0.00001^2} = \pm 0.0004 \text{ Vdc}$$

Fluke 45 multimeter (5 digit display, 10 Vdc range)

RA_{mte} = ± 0.025% reading
RA_{mte} = ± 0.025% reading * 10 Vdc
RA_{mte} = ± 0.0025 Vdc

RA_{std} = 0

RD_{mte} = ± 6 DG * 0.001 Vdc
RD_{mte} = ± 0.006 Vdc

From Section 3.3.4.4 of Reference G.1, M&TE uncertainty is calculated using the following equation:

$$m = \pm\sqrt{RA^2_{mte} + RA^2_{std} + RD^2_{mte}}$$

$$VIm_{45} = \pm\sqrt{0.0025^2 + 0^2 + 0.006^2} = \pm 0.0065 \text{ Vdc}$$

The worst case and bounding input M&TE error is VIm_{45} = ±0.0065 Vdc.

Converting to % span:

VIm_{45} = ± 0.0065 Vdc * (100 % span / 10 Vdc)

VIm_{45} = ± 0.065 % span

The total M&TE uncertainty for the calibration of the current-to-voltage converter is calculated using the multiple M&TE equation given in Section 3.3.4.4 of Reference G.1:

$$VIm = \pm\sqrt{VIm_{45}^{2} + VIm_{HP}^{2}}$$

$$VIm = \pm\sqrt{0.065^2 + 0.094^2}$$

VIm = ± 0.114 % span

8.1.24 Voltage-to-Current Converter Setting Tolerance (VIv)

Per Assumption 5.1.4 and References P.3 – P.4, the Voltage-to-Current Converter Setting Tolerance is ± 0.08 mAdc.

VIv = setting tolerance * (100% span / calibrated span)
VIv = ± 0.08 mAdc * (100% span /16 mAdc)

VIv = ± 0.5 % span

8.1.25 Voltage-to-Current Converter Power Supply Effect (VIp)

Per Reference V.3, the Voltage-to-Current Converter has a supply voltage effect of ± 0.5 % of output span for a ± 5% change in input voltage. As noted in Section 8.1.5, a ± 5% Vdc power supply change is considered. Therefore,

VIp = ± 0.5 % span

8.1.26 Voltage-to-Current Converter Temperature Effect (VIt)

Per Reference V.3, the Voltage-to-Current Converter Temperature Effect is ± 0.5 % of output span maximum for a 50 °F change within normal operating limits of 40 °F to 120 °F.

Per Section 6.5.1, the Voltage-to-Current converters employed in the Steam Driven AF Pump Suction Pressure Switchover/Trip/Alarm loops are located in the AF Pump Cubicles (Control Building).

Per Section 6.5.1, the temperature range in the Auxiliary Feedwater Pump Cubicles (Control Building) is 60 °F to 120 °F. Therefore, the maximum temperature change is 60 °F.

VIt = ± (0.5 % * 16 mAdc) * (60 °F / 50 °F)
VIt = ± (0.08 mAdc) * (1.2)
VIt = ± 0.096 mAdc

Converting to % span:

VIt = ± 0.096 mAdc * (100 % span / 16 mAdc)

VIt = ± 0.6 % span

8.1.27 Voltage-to-Current Converter Humidity Effect (VIh)

Per Section 6.5.1, the Voltage-to-Converter converters employed in the Steam Driven AF Pump Suction Pressure Alarm loop is located in the AF Pump Cubicles (Control Building).

Per Section 3.3.3.20 of Ref. G.1, humidity effects should be incorporated when provided by the vendor. Otherwise, changes in humidity are assumed to have a negligible effect on the instrument uncertainty.

Per Ref. V.3, the vendor does not specify a humidity effect for the VI converters. Therefore,

VIh = ± 0.0 % span

8.1.28 Voltage-to-Current Converter Radiation Effect (VIr)

Per Section 6.5.1, the Voltage-to-Current converters employed in the Steam Driven AF Pump Suction Pressure Alarm loop is located in the AF Pump Cubicles (Control Building).

Per Section 6.5.1, the radiation level in the Auxiliary Feedwater Pump Cubicles (Control Building) is 400 RADs (40 year dose).

Per Section 6.5.1, the AF Pump Cubicle Area is outside the Radiologically Controlled Area (RCA), and is not subject to high radiation levels during accident conditions. Further, per Section 3.3.3.21 of Ref. G.1, radiation errors are typically small when compared with other instrument uncertainties, and are adjusted out at every instrument calibration. Therefore,

VIr = ± 0.0 % span

8.1.29 Voltage-to-Current Converter Seismic Effect (VIs)

Per Section 3.3.4.10 of Reference G.1, the effects of seismic or vibration events for non-mechanical instrumentation are considered zero unless vendor or industry experience indicates otherwise.

The vendor does not report a seismic effect for the Voltage-to-Current Converter (Reference V.3). Therefore,

VIs = ± 0.0 % span

8.1.30 Bistable Accuracy (Ba)

Per Reference V.4, the Bistable has a ± 0.5 % setpoint repeatability.

Ba = ± 0.5 % span

8.1.31 Bistable Drift (Bd)

Per Reference V.4, the vendor does not specify a drift value for the bistable unit. Per Section 3.3.3.15 of Ref. G.1, in the absence of an appropriate drift analysis and when drift is unspecified by the vendor, the instrument's accuracy is used as the instrument drift over the entire calibration period.

Bd = ± 0.5 % span

8.1.32 Bistable M&TE Effect (Bm)

M&TE Effect for 1(2)PC-4044-LL (switchover/trip), PC-4042L/LL, and PC-4043L/LL

Per Reference P.3 through P.4, these bistable units are calibrated by applying a voltage signal into the bistable unit, measuring the input signal via a multimeter capable of measuring 0-10 Vdc, and confirming a relay output on the bistable unit (at the desired setpoint).

Per G.1 Section 3.3.4.4 of Reference G.1 based on the practices observed by the station, Calibration Standard Error (RAstd) is considered negligible.

Per ICI 12 ("Selection of M&TE for Field Calibrations"- Ref. P.7), there are 2 devices that meet the required criteria for the M&TE. Each of the equipment device uncertainties is calculated below:

HP 34401A multimeter (6.5 digit display, 10.0 Vdc range) (Ref. V.6)

RA_{mte} = ± (0.0035 % reading + 0.0005 % range)
RA_{mte} = ± [0.0035 % (10 Vdc) + 0.0005 % (10 Vdc)]
RA_{mte} = ± 0.0004 Vdc

RA_{std} = 0

RD_{mte} = ± 0.00001 Vdc

From Section 3.3.4.4 of Reference G.1, M&TE uncertainty is calculated using the following equation:

$$m = \pm\sqrt{RA^2_{mte} + RA^2_{std} + RD^2_{mte}}$$

$$Bm_{HP} = \pm\sqrt{0.0004^2 + 0^2 + 0.00001^2} = \pm 0.0004 \text{ Vdc}$$

<u>Fluke 45 multimeter (5 digit display, 10 Vdc range)</u>

RA_{mte} = ± 0.025% reading
RA_{mte} = ± 0.025% reading * 10 Vdc
RA_{mte} = ± 0.0025 Vdc

RA_{std} = 0

RD_{mte} = ± 6 DG * 0.001 Vdc
RD_{mte} = ± 0.006 Vdc

From Section 3.3.4.4 of Reference G.1, M&TE uncertainty is calculated using the following equation:

$$m = \pm\sqrt{RA^2_{mte} + RA^2_{std} + RD^2_{mte}}$$

$$Bm_{45} = \pm\sqrt{0.0025^2 + 0^2 + 0.006^2} = \pm 0.0065 \text{Vdc}$$

The worst case and bounding M&TE error is Bm_{45} = ±0.0065 Vdc.

Converting to % span:

Bm_{45} = ± 0.0065 Vdc * (100 % span / 10 Vdc)

Bm_{45} = ± 0.065 % span

<u>M&TE Effect for 1(2)PC-4044-L (alarm)</u>

Per Reference P.3 – P.4, these bistable units are calibrated by injecting a current signal into the bistable unit (over a 500 Ω resistor connected across the calibration point per Ref. D.3 – D.4), measuring the input signal via a multimeter capable of measuring 4-20 mAdc, and confirming a relay output on the bistable unit (at the desired setpoint). This calculation does not consider any uncertainty

value associated with the 500 Ω resistor because effects are calibrated out during calibration.

Per G.1 Section 3.3.4.4 of Reference G.1 based on the practices observed by the station, Calibration Standard Error (RAstd) is considered negligible.

Per ICI 12 ("Selection of M&TE for Field Calibrations"- Ref. P.7), there are 2 devices that meet the required criteria for the M&TE. Each of the equipment device uncertainties is calculated below:

For the Fluke 45 multimeter (30 mA range, 5 digit display):

RA_{mte} = uncertainty * maximum reading
RA_{mte} = ± 0.05 % reading * 20 mAdc
RA_{mte} = ± 0.01 mAdc

RA_{std} = 0
RD_{mte} = ± 3 DGTS * 0.001 mAdc
RD_{mte} = ± 0.003 mAdc

From Section 3.3.4.4 of Reference G.1, M&TE uncertainty is calculated using the following equation:

$$m = \pm\sqrt{RA^2_{mte} + RA^2_{std} + RD^2_{mte}}$$

$$Bm_{45} = \pm\sqrt{0.01^2 + 0^2 + 0.003^2} = \pm 0.0104 \text{ mAdc}$$

HP 34401A multimeter (6.5 digit display, 100 mAdc range) (Ref. V.6)

RA_{mte} = ± (0.050 % reading + 0.005 % range)
RA_{mte} = ± [0.050 % (20 mAdc) + 0.005 % (100 mAdc)]
RA_{mte} = ± 0.015 mAdc

RA_{std} = 0

RD_{mte} = ± 0.0001 mAdc

From Section 3.3.4.4 of Reference G.1, M&TE uncertainty is calculated using the following equation:

$$m = \pm\sqrt{RA^2_{mte} + RA^2_{std} + RD^2_{mte}}$$

$$Bm_{HP} = \pm\sqrt{0.015^2 + 0^2 + 0.0001^2} = \pm 0.015 \text{ mAdc}$$

The worst case and bounding M&TE error Bm_{HP} = ±0.015 mAdc.

Converting to % span:

Bm_{HP} = ± 0.015 mAdc * (100 % span / 16 mAdc)

Bm_{HP} = ± 0.094 % span

8.1.33 Bistable Setting Tolerance (Bv)

Per Assumption 5.1.4 and References P.3 and P.4, bistables 1(2)PC-4044-LL (switchover/trip) have a setting tolerance of ± 0.020 Vdc. Note that this bistable is configured for single setpoint action (switchover/trip function).

Per Assumption 5.1.4 and References P.3 and P.4, bistables 1(2)PC-4044-L (alarm) have a setting tolerance of ± 0.03 mAdc (due to a 500 Ω resistor connected across the calibration point per Ref. D.3 – D.4). Note that this bistable is configured for single setpoint action (alarm function).

Steam Driven Loop Bistable (Switchover / Trip) Setting Tolerance ($Bv_{steam-LL}$)

$Bv_{steam-LL}$ = ± 0.020 Vdc * (100 % span / 10 Vdc)

$Bv_{steam-LL}$= ± 0.2 % span

Steam Driven Loop Bistable (Alarm) Setting Tolerance ($Bv_{steam-L}$)

$Bv_{steam-L}$ = ± 0.03 mAdc * (100 % span / 16 mAdc)

$Bv_{steam-L}$= ± 0.1875 % span

8.1.34 Bistable Power Supply Effect (Bp)

Per Reference V.4, the Bistable has a power supply effect of ± 0.25 % for a 5 % change in supply voltage. As noted in Section 8.1.5, a ± 5% Vdc power supply change is considered. Therefore,

Bp = ± 0.25 % span

8.1.35 Bistable Temperature Effect (Bt)

Per Reference V.4, the Bistable Unit Temperature Effect is ± 0.5 % of input span maximum for a 50 °F change within normal operating limits of 40 °F to 120 °F.

Per Section 6.5.1, the bistable unit employed in the Steam Driven AF Pump Suction Pressure Switchover / Trip is located in the AF Pump Cubicles (Control

Building). The bistable unit employed in the Steam Driven AF Pump Suction Pressure Alarm is located in the Computer Room.

Switchover/Trip Bistable Temperature Effect ($Bt_{steam-LL}$)

Per Section 6.5.1, the temperatures in the Auxiliary Feedwater Pump Cubicles (Control Building) are range from 60 °F to 120 °F. Therefore, the maximum temperature change is 60 °F.

$Bt_{steam-LL}$ = ± (0.5 % * 10 Vdc) * (60 °F / 50 °F)
$Bt_{steam-LL}$ = ± (0.05 Vdc) * (1.2)
$Bt_{steam-LL}$ = ± 0.06 Vdc

Converting to % span:

$Bt_{steam-LL}$ = ± 0.06 Vdc * (100 % span / 10 Vdc)

$Bt_{steam-LL}$ = ± 0.6 % span

Alarm Bistable Temperature Effect ($Bt_{steam-L}$)

Per Section 6.5.2, the temperatures in the computer room range from 65 °F to 120 °F (due to a loss of the non-safety related HVAC cooling unit). Therefore, the maximum temperature change is 55 °F.

$Bt_{steam-L}$ = ± (0.5 % * 16 mAdc) * (55 °F / 50 °F)
$Bt_{steam-L}$ = ± (0.08 mAdc) * (1.1)
$Bt_{steam-L}$ = ± 0.088 mAdc

Converting to % span:

$Bt_{steam-L}$ = ± 0.088 mAdc * (100 % span / 16 mAdc)

$Bt_{steam-L}$ = ± 0.55 % span

8.1.36 Bistable Humidity Effect (Bh)

Per Section 6.5.1, the bistable units employed in the Steam Driven AF Pump Suction Pressure Switchover/Trip loop is located in the AF Pump Cubicles (Control Building). Per Section 6.5.2, the bistable units employed in the Steam Driven AF Pump Suction Pressure Alarm loop are located in the Computer Room.

Per Section 3.3.3.20 of Ref. G.1, humidity effects should be incorporated when provided by the vendor. Otherwise, changes in humidity are assumed to have a negligible effect on the instrument uncertainty.

Per Ref. V.4, the vendor does not specify a humidity effect for the bistable units.

Bh = ± 0.0 % span

8.1.37 Bistable Radiation Effect (Br)

Per Section 6.5.1, the bistable unit employed in the Steam Driven AF Pump Suction Pressure Switchover/Trip is located in the AF Pump Cubicles (Control Building). The bistable unit employed in the Steam Driven AF Pump Suction Pressure Alarm is located in the Computer Room. Per Sections 6.5.1 and 6.5.2, the AF Pump Cubicles (Control Building) environmental conditions are harsher than in the Computer Room. As such, for simplicity purposes, all Steam Driven AF Pump Suction Bistables are conservatively evaluated under the AF Pump Cubicles (Control Building) environmental conditions.

Steam Driven Loop Bistable Units (Br_{steam})

Per Section 6.5.1, the radiation levels in the Auxiliary Feedwater Pump Cubicles (Control Building) is 400 RADs.

Per Section 6.5.1, the AF Pump Cubicle Area is outside the Radiologically Controlled Area (RCA), and is not subject to high radiation levels during accident conditions. Further, per Section 3.3.3.21 of Ref. G.1, radiation errors are typically small when compared with other instrument uncertainties, and are adjusted out at every instrument calibration. Therefore,

Br_{steam} = ± 0.0 % span

8.1.38 Bistable Seismic Effect (Bs)

Per Section 3.3.4.10 of Reference G.1, the effects of seismic or vibration events for non-mechanical instrumentation are considered zero unless vendor or industry experience indicates otherwise.

The vendor does not report a seismic effect for the bistable units (Reference V.4).

Bs = ± 0.0 % span

8.2 Process Error (PE)

The normal source of the Auxiliary Feedwater Pumps is the Condensate Storage Tanks. As pump suction pressure lowers to a predetermined value, the pressure instrument loops alarm and switchover/trip in order to prevent damage to the AF pumps. Since these pressure sensors (transmitters) are located in a location where environmental conditions, such as temperature, may vary, Process Error must be evaluated.

However, Section 6.6 utilized a temperature of 40 °F to determine the minimum pressure at which a switchover/trip initiation must occur to protect the AF pumps. This temperature is considered conservative because it provides the largest possible density of water in the AF piping, thus providing the highest possible minimum pressure. An increase or decrease in temperature (from 40 °F) will create a lower density of water, causing the transmitter to receive a lower pressure and consequently cause an early switchover/trip initiation. Therefore, process errors, due to changes in temperature, are accounted for in determining the conservative analytical limit (AL) value.

PE = ± 0.0 % span

8.3 Device Uncertainty Summary

8.3.1 Sensor Uncertainties

Parameter	Uncertainty (% span)	Ref. Section
Sensor Accuracy (Sa)	± 0.075 %	8.1.1
Sensor Drift (Sd)	± 0.240%	8.1.2
Sensor M&TE (Sm)	± 0.535 %	8.1.3
Sensor Setting Tolerance (Sv)	= ± 0.25 %	8.1.4
Sensor Power Supply Effect (Sp)	± 0.0075 %	8.1.5
Sensor Temperature Effect (St)	± 0.047 %	8.1.6
Sensor Humidity Effect (Sh)	± 0.0 %	8.1.7
Sensor Radiation Effect (Sr)	± 0.0 %	8.1.8
Sensor Seismic Effect (Ss)	± 0.902 %	8.1.9
Sensor Static Pressure Effect (Sspe)	± 0.0 %	8.1.10
Sensor Overpressure Effect (Sope)	± 0.0 %	8.1.11

8.3.2 Current-to-Voltage Converter Uncertainties

Parameter	Uncertainty (% span)	Ref. Section
Current-to-Voltage Converter Accuracy (IVa)	± 0.25 %	8.1.12
Current-to-Voltage Converter Drift (IVd)	± 0.25 %	8.1.13
Current-to-Voltage Converter M&TE (IVm)	± 0.114 %	8.1.14
Current-to-Voltage Converter Setting Tolerance (IVv)	± 0.5 %	8.1.15
Current-to-Voltage Converter Power Supply Effect (IVp)	± 0.2 %	8.1.16
Current-to-Voltage Converter Temperature Effect (IVt)	= ± 0.6%	8.1.17
Current-to-Voltage Converter Humidity Effect (IVh)	± 0.0 %	8.1.18
Current-to-Voltage Converter Radiation Effect (IVr)	± 0.0 %	8.1.19
Current-to-Voltage Converter Seismic Effect (IVs)	± 0.0 %	8.1.20

8.3.3 Voltage-to-Current Converter Uncertainties

Parameter	Uncertainty (% span)	Ref. Section
Voltage-to-Current Converter Accuracy (VIa)	± 0.5 %	8.1.21
Voltage-to-Current Converter Drift (VId)	± 0.5 %	8.1.22
Voltage-to-Current Converter M&TE (VIm)	± 0.114 %	8.1.23
Voltage-to-Current Converter Setting Tolerance (VIv)	± 0.5 %	8.1.24
Voltage-to-Current Converter Power Supply Effect (VIp)	± 0.5 %	8.1.25
Voltage-to-Current Converter Temperature Effect (VIt)	± 0.6%	8.1.26
Voltage-to-Current Converter Humidity Effect (VIh)	± 0.0 %	8.1.27
Voltage-to-Current Converter Radiation Effect (VIr)	± 0.0 %	8.1.28
Voltage-to-Current Converter Seismic Effect (VIs)	± 0.0 %	8.1.29

8.3.4 Bistable Uncertainties

Parameter	Uncertainty (% span)	Ref. Section
Bistable Accuracy (Ba)	± 0.5 %	8.1.30
Bistable Drift (Bd)	± 0.5 %	8.1.31
Bistable M&TE (Bm)	Bm_{45} = ± 0.065 %	8.1.32
	Bm_{HP} = ± 0.094 %	
Bistable Setting Tolerance (Bv)	$Bv_{steam\text{-}LL}$ = ± 0.2 %	8.1.33
	$Bv_{steam\text{-}L}$ = ± 0.1875 %	
Bistable Power Supply Effect (Bp)	± 0.25 %	8.1.34
Bistable Temperature Effect (Bt)	$Bt_{steam\text{-}LL}$ = ± 0.6 %	8.1.35
	$Bt_{steam\text{-}L}$ = ± 0.55%	
Bistable Humidity Effect (Bh)	± 0.0 %	8.1.36
Bistable Radiation Effect (Br)	± 0.0 %	8.1.37
Bistable Seismic Effect (Bs)	± 0.0 %	8.1.38

8.3.5 Process Considerations and Bias Terms

Parameter	Uncertainty (% span)	Ref. Section
Process Error (PE)	± 0.0 %	8.2
Bias Terms (Bias)	± 0.0 %	8.1.1 – 8.1.38

8.4 Total Loop Error

Per Section 7.1.2, the Total Loop Error is determined as follows:

8.4.1 Steam Driven Pump Switchover/Trip Total Loop Error ($TLE_{SWITCHOVER/TRIP-STEAM}$)

Per Section 7.1.2.1, the AFP Low Suction Pressure Switchover/Trip Function for the steam driven pumps (1P-29 and 2P-29) contains uncertainties from the Sensor, Current-to-Voltage Converter and Bistable.

The TLE Equation from Section 7.1.2.1 is adapted for the specific instrument uncertainties and shown below:

$$TLE_{SWITCHOVER/TRIP-STEAM} = \pm\sqrt{\begin{array}{l} Sa^2 + IVa^2 + Ba^2 + Sd^2 + IVd^2 + Bd^2 + Sm^2 + IVm^2 + Bm_{45}{}^2 + Sv_{steam}{}^2 \\ + IVv^2 + Bv_{steam\text{-}LL}{}^2 + Sp^2 + IVp^2 + Bp^2 + St^2 + IVt_{steam}{}^2 + Bt_{steam\text{-}LL}{}^2 + Sh^2 \\ + IVh^2 + Bh^2 + Sr^2 + IVr^2 + Br^2 + Ss^2 + IVs^2 + Bs^2 + Sspe^2 + Sope^2 \end{array}} \pm \text{Bias}$$

Substituting from the uncertainty tables in Sections 8.3.1, 8.3.2, 8.3.4 and 8.3.5, the Allowances are calculated as follows:

$$TLE_{SWITCHOVER/TRIP-STEAM} = \pm\sqrt{\begin{array}{l} 0.075^2 + 0.25^2 + 0.5^2 + 0.240^2 + 0.25^2 + 0.5^2 + 0.535^2 + 0.114^2 + 0.065^2 + 0.25^2 \\ + 0.5^2 + 0.2^2 + 0.0075^2 + 0.2^2 + 0.25^2 + 0.047^2 + 0.6^2 + 0.6^2 + 0.0^2 \\ + 0.0^2 + 0.0^2 + 0.0^2 + 0.0^2 + 0.0^2 + 0.902^2 + 0.0^2 + 0.0^2 + 0.0^2 + 0.0^2 \end{array}} \pm 0.0$$

$TLE_{SWITCHOVER/TRIP-STEAM}$ = ± 1.727% span

Per Section 7.4, a reduction factor of (1.645 / 1.96) is utilized when calculating setpoints approached from a single direction. Therefore,

$TLE_{SWITCHOVER/TRIP-STEAM}$ = ± 1.727 % * (1.645 / 1.96)

$TLE_{SWITCHOVER/TRIP-STEAM}$ = ± 1.450 % span *
(30 psig / 100 % span)

$TLE_{SWITCHOVER/TRIP-STEAM}$ = ± 0.435 psig

8.4.2 Steam Driven Pump Alarm Total Loop Error ($TLE_{ALARM\text{-}STEAM}$)

Per Section 7.1.2.2, the AFP Low Suction Pressure Alarm Function for the steam driven pumps (1P-29 and 2P-29) contains uncertainties from the Sensor, Current-to-Voltage Converter, Voltage-to-Current Converter and the Bistable.

The TLE Equation from Section 7.1.2.2 is adapted for the specific instrument uncertainties and shown below:

$$TLE_{ALARM-STEAM} = \pm\sqrt{\begin{array}{l} Sa^2 + IVa^2 + VIa^2 + Ba^2 + Sd^2 + IVd^2 + VId^2 + Bd^2 + Sm^2 + IVm^2 \\ + VIm^2 + Bm_{HP}{}^2 + Sv_{steam}{}^2 + IVv^2 + VIv^2 + Bv_{steam\text{-}L}{}^2 + Sp^2 + IVp^2 + VIp^2 \\ + Bp^2 + St^2 + IVt_{steam}{}^2 + VIt^2 + Bt_{steam\text{-}L}{}^2 + Sh^2 + IVh^2 + VIh^2 + Bh^2 \\ + Sr^2 + IVr^2 + VIr^2 + Br^2 + Ss^2 + IVs^2 + VIs^2 + Bs^2 + Sspe^2 + Sope^2 \end{array}} \pm \text{Bias}$$

Substituting from the uncertainty tables in Sections 8.3.1 – 8.3.5, the Allowances are calculated as follows:

$$TLE_{ALARM\text{-}STEAM} = \pm\sqrt{\begin{array}{l} 0.075^2 + 0.25^2 + 0.5^2 + 0.5^2 + 0.240^2 + 0.25^2 + 0.5^2 + 0.5^2 + 0.535^2 + 0.114^2 \\ + 0.114^2 + 0.094^2 + 0.25^2 + 0.5^2 + 0.5^2 + 0.1875^2 + 0.0075^2 + 0.2^2 + 0.5^2 \\ + 0.25^2 + 0.047^2 + 0.6^2 + 0.6^2 + 0.55^2 + 0.0^2 + 0.0^2 + 0.0^2 + 0.0^2 \\ + 0.0^2 + 0.0^2 + 0.0^2 + 0.0^2 + 0.902^2 + 0.0^2 + 0.0^2 + 0.0^2 + 0.0^2 + 0.0^2 \end{array}} \pm 0.0$$

$TLE_{ALARM\text{-}STEAM}$ $= \pm 2.073$ % span

Per Section 7.4, a reduction factor of (1.645 / 1.96) is utilized when calculatingsetpoints approached from a single direction. Therefore,

$TLE_{ALARM\text{-}STEAM}$ $= \pm 2.073 * (1.645 / 1.96)$

$TLE_{ALARM\text{-}STEAM}$ $= \pm$ 1.740 % span * (30 psig / 100 % span)
$TLE_{ALARM\text{-}STEAM}$ $= \pm$ 0.522 psig

8.5 Acceptable As-Found and As-Left Calibration Tolerances

8.5.1 Acceptable As-Found Calibration Tolerances

Per Section 3.3.8.6 of Reference G.1, the As-Found Tolerances are determined using the equations shown in Section 7.2 of this calculation.

Reference P.1 through P.4 shows a separate calibration for the Sensor, Current-to-Voltage Converter, Voltage-to-Current Converter, and Bistable. Therefore, the As-Found Tolerance for each device is calculated independently.

8.5.1.1 Sensor As-Found Tolerance (SAF)

Steam Driven Pump Suction Pressure Transmitter AFT (SAF_{Steam})

The equation from Section 7.2.1 is adapted for the specific instrument uncertainties and shown below:

$$SAF_{Steam} = \pm \sqrt{Sv_{Steam}^{2} + Sd^{2} + Sm^{2}}$$

where:

Sv_{Steam}	= ± 0.25 % span	Section 8.1.4
Sd	= ± 0.240 % span	Section 8.1.2
Sm	= ± 0.535 % span	Section 8.1.3

$$SAF_{Steam} = \pm \sqrt{0.25^2 + 0.240^2 + 0.535^2}$$

$$SAF_{Steam} = \pm 0.6374 \text{ \% span}$$

Converting from % span to mA:

$$SAF_{Steam} = \pm 0.6378 \text{ \% span} * (16 \text{ mA} / 100 \text{ \% span})$$

$$\mathbf{SAF_{Steam} = \pm 0.10 \text{ mA}}$$

The resulting As-Found Tolerance is rounded to the precision of the associated calibration procedure (Ref. P.1 – P.2).

8.5.1.2 Current-to-Voltage Converter As-Found Tolerance (IVAF)

The equation from Section 7.2.2 is adapted for the specific instrument uncertainties and shown below:

$$IVAF = \pm \sqrt{IVv^2 + IVd^2 + IVm^2}$$

where:

IVv = ± 0.5 % span	Section 8.1.15
IVd = ± 0.25 % span	Section 8.1.13
IVm = ± 0.114 % span	Section 8.1.14

$$IVAF = \pm \sqrt{0.5^2 + 0.25^2 + 0.114^2}$$

IVAF = ± 0.5705 % span

Converting from % span to mA:

IVAF = ± 0.5705 % span * (10 Vdc / 100 % span)

IVAF = ± 0.057 Vdc

The resulting As-Found Tolerance is rounded to the precision of the associated calibration procedure (Ref. P.3 – P.4).

8.5.1.3 Voltage-to-Current Converter As-Found Tolerance (VIAF)

The equation from Section 7.2.3 is adapted for the specific instrument uncertainties and shown below:

$$VIAF = \pm \sqrt{VIv^2 + VId^2 + VIm^2}$$

where:

VIv = ± 0.5 % span	Section 8.1.24
VId = ± 0.5 % span	Section 8.1.22
VIm = ± 0.114 % span	Section 8.1.23

$$VIAF = \pm \sqrt{0.5^2 + 0.5^2 + 0.114^2}$$

VIAF = ± 0.7162 % span

Converting from % span to mA:

VIAF = ± 0.7162 % span * (16 mA / 100 % span)

VIAF = ± 0.11 mA

The resulting As-Found Tolerance is rounded to the precision of the associated calibration procedure (Ref. P.3 – P.4).

8.5.1.4 Bistable As-Found Tolerance (BAF)

Steam Driven Pump Suction Pressure Switchover/Trip Bistable AFT ($BAF_{Steam-LL}$)

The equation from Section 7.2.4 is adapted for the specific instrument uncertainties and shown below:

$$BAF_{Steam-LL} = \pm \sqrt{Bv_{Steam-LL}^{2} + Bd^{2} + Bm_{45}^{2}}$$

where:

$Bv_{Steam-LL}$	= ± 0.2 % span	Section 8.1.33
Bd	= ± 0.5 % span	Section 8.1.31
Bm_{45}	= ± 0.065 % span	Section 8.1.32

$$BAF_{Steam-LL} = \pm \sqrt{0.2^{2} + 0.5^{2} + 0.065^{2}}$$

$$BAF_{Steam-LL} = \pm 0.5424 \text{ \% span}$$

Converting from % span to Vdc:

$BAF_{Steam-LL}$ = ± 0.5424 % span * (10 Vdc / 100 % span)

$BAF_{Steam-LL}$ = ± 0.054 Vdc

The resulting As-Found Tolerance is rounded to the precision of the associated calibration procedure (Ref. P.3 – P.4).

Steam Driven Pump Suction Pressure Alarm Bistable AFT ($BAF_{Steam-L}$)

The equation from Section 7.2.4 is adapted for the specific instrument uncertainties and shown below:

$$BAF_{Steam-L} = \pm \sqrt{Bv_{Steam-L}^{2} + Bd^{2} + Bm_{HP}^{2}}$$

where:

$Bv_{Steam-L}$	= ± 0.1875 % span	Section 8.1.33
Bd	= ± 0.5 % span	Section 8.1.31
Bm_{HP}	= ± 0.094 % span	Section 8.1.32

$$BAF_{Steam-L} = \pm \sqrt{0.1875^{2} + 0.5^{2} + 0.094^{2}}$$

$$BAF_{Steam-L} = \pm 0.5422 \text{ \% span}$$

Converting from % span to mAdc:

$$BAF_{Steam-L} = \pm 0.5422 \text{ \% span} * (16 \text{ mAdc} / 100 \text{ \% span})$$

$$\mathbf{BAF_{Steam-L} = \pm 0.08 \text{ mA}}$$

The resulting As-Found Tolerance is rounded to the precision of the associated calibration procedure (Ref. P.3 – P.4).

8.5.2 Acceptable As-Left Calibration Tolerances

Per Section 3.3.8.6 of Reference G.1, the As-Left Tolerance is determined using the equations shown in Section 7.3 of this calculation.

Reference P.1 through P.4 shows a separate calibration for the Sensor, Current-to-Voltage Converter, Voltage-to-Current Converter and Bistable. Therefore, the As-Left Tolerance for each device is calculated independently.

8.5.2.1 Sensor As-Left Tolerance (SAL)

Steam Driven Pump Suction Pressure Transmitter ALT (SAL_{Steam})

Using the equation from Section 7.3.1:

$SAL_{Steam} = \pm Sv_{Steam}$

$SAL_{Steam} = \pm 0.25$ %Span Section 8.1.4

Converting from % span to mAdc:

$SAL_{Steam} = \pm 0.25$ % span * (16 mAdc / 100 % span)

$SAL_{Steam} = \pm 0.04$ mAdc

8.5.2.2 Current-to-Voltage Converter As-Left Tolerance (IVAL)

Using the equation from Section 7.3.2:

IVAL = ± IVv

IVAL = ± 0.5% span Section 8.1.15

Converting from % span to Vdc:

IVAL = ± 0.5 % span * (10 Vdc / 100 % span)

IVAL = ± 0.050 Vdc

8.5.2.3 Voltage-to-Current Converter As-Left Tolerance (VIAL)

Using the equation from Section 7.3.3:

VIAL = ± VIv

VIAL = ± 0.5% span Section 8.1.24

Converting from % span to mAdc:

VIAL = ± 0.5 % span * (16 mAdc / 100 % span)

VIAL = ± 0.08 mAdc

8.5.2.4 Bistable As-Left Tolerance (BAL)

Steam Driven Pump Suction Pressure Switchover/Trip Bistable ALT ($BAL_{Steam-LL}$)

Using the equation from Section 7.3.4:

$BAL_{Steam-LL}$ = ± $Bv_{Steam-LL}$

$BAL_{Steam-LL}$ = ± 0.2 % span Section 8.1.33

Converting from % span to Vdc:

$BAL_{Steam-LL}$ = ± 0.2 % span * (10 Vdc / 100 % span)

$BAL_{Steam-LL}$ = ± 0.020 Vdc

Steam Driven Pump Suction Pressure Alarm Bistable ALT ($BAL_{Steam-L}$)

Using the equation from Section 7.3.4:

$BAL_{Steam-L}$ = ± $Bv_{Steam-L}$

$BAL_{Steam-L}$ = ± 0.1875 % span Section 8.1.33

Converting from % span to mAdc:

$BAL_{Steam-L}$ = ± 0.1875 % span * (16 mAdc / 100 % span)

$BAL_{Steam-L}$ = ± 0.03 mAdc

8.6 Setpoint Evaluation

Per Section 7.4, for a process decreasing from normal operation toward the analytical limit, the calculated limiting trip setpoint is determined as follows:

$$SP\downarrow = AL + [(0.839)^* TLE_{rdm}^{+} + TLE_{bias}^{+}]PS$$

Per Section 7.4, the LTSP used to determine the margin compared to the existing FTSP as follows:

$$\text{Margin} = LTSP - FTSP$$

These equations are used throughout this section for the evaluation of the AFP Suction Pressure Switchover/Trip/Alarm Setpoints.

8.6.1 Steam Driven Pump 1(2)P-29 Low-Low Suction Pressure Switchover/Trip Setpoint

Per Section 6.6, the Analytical Limit for the AF Low Pressure Suction Stitchover/Trip is 5.241 psig. The random component of $TLE_{SWITCHOVER/TRIP\text{-}STEAM}$ was converted (for a single-sided approach) from 1.727 %Span to 1.450 % span in Section 8.4.1.

Substituting:

$$SP_{SWITCHOVER/TRIP\text{-}Steam} = 5.241 \text{ psig} + (1.450\ \% * 30 \text{ psig})$$

$$SP_{SWITCHOVER/TRIP\text{-}Steam} = 5.241 \text{ psig} + 0.435 \text{ psig}$$

$$\mathbf{SP_{SWITCHOVER/TRIP\text{-}Steam} = 5.676 \text{ psig}}$$

Using the setpoint acceptance criteria prescribed in Section 2.0 for a decreasing setpoint.

$$LTSP \geq SP$$

$$5.7 \text{ psig} \geq 5.676 \text{ psig}$$

The newly recommended limiting trip setpoint of 5.7 psig is acceptable. Therefore,

$$\mathbf{LTSP_{SWITCHOVER/TRIP\text{-}Steam\text{-}new} = 5.7 \text{ psig}}$$

To protect the LTSP the FTSP has been select such that additional margin is provided between LTSP and FTSP. Therefore a value of 6.0 psig has been selected for the FTSP.

$$\mathbf{FTSP_{SWITCHOVER/TRIP\text{-}Steam\text{-}new} = 6.0 \text{ psig}}$$

Per References P.3 and P.4, the existing 1(2)P-29 AF Pump Lo-Lo Suction Pressure Trip Setpoint (FTSP) is 6.6 psig (decreasing). Per Section 2.0, the

existing trip setpoint (FTSP) is revised to reflect the lower span of the new switchover/trip loop.

FTSP ≥ SP

The existing Lo-Lo Suction Pressure Trip Setpoint (FTSP) is not acceptable, and will be revised to 6.0 psig.

Again, using the setpoint acceptance criteria prescribed in Section 2.0,

FTSP ≥ SP

6.0 psig ≥ 5.676 psig

Where additional margin is provided to protect the LTSP.

$\text{Margin}_{\text{SWITCHOVER/TRIP-Steam}} = \text{LTSP}_{\text{SWITCHOVER/TRIP-Steam}} - \text{FTSP}_{\text{SWITCHOVER/TRIP-Steam}}$

Substituting:

$\text{Margin}_{\text{SWITCHOVER/TRIP-Steam}} = |\ 5.7\ \text{psig} - 6.0\ \text{psig}\ |$

$\mathbf{Margin}_{\text{SWITCHOVER/TRIP-Steam}} = \mathbf{0.3\ psig}$

Moreover, margin is required to be provided for Rack Error (RE) for the tested portion of the trip channel during normal operation. This includes the Current-to-Voltage Converter and Bistable As-Found Tolerance. Per Section 8.5.1.2 and 8.5.1.4 the uncertainty associated with the Current-to-Voltage Converter and Switchover/Trip Bistable are used to determine the RE as follows:

$$RE = \pm\sqrt{IVv^2 + IVd^2 + IVm^2 + Bv_{\text{Steam-LL}}{}^2 + Bd^2 + Bm_{45}{}^2}$$

Where:

IVv	= ± 0.5 % span	Section 8.1.15
IVd	= ± 0.25 % span	Section 8.1.13
IVm	= ± 0.114 % span	Section 8.1.14
$Bv_{\text{Steam-LL}}$	= ± 0.2 % span	Section 8.1.33
Bd	= ± 0.5 % span	Section 8.1.31
Bm_{45}	= ± 0.065 % span	Section 8.1.32

$$RE_{\text{as-found}} = \pm\sqrt{0.5^2 + 0.25^2 + 0.114^2 + 0.2^2 + 0.5^2 + 0.065^2}$$

$RE_{\text{as-found}} = \pm\ 0.7872\ \%$ span

Converting from % span to Vdc:

$RE_{as\text{-}found} = \pm 0.7872$ % span * (10 Vdc / 100 % span)
$RE_{as\text{-}found} = \pm 0.079$ Vdc

Converting from % span to psig:

$RE_{as\text{-}found} = \pm 0.7872$% span * (30 psig / 100 % span)
$RE_{as\text{-}found} =$ **0.236 psig**

The Rack Error (RE) for the Current-to-Voltage Converter and Bistable As-Left Tolerance. Per Section 8.5.2.2 and 8.6.2.4 the uncertainty associated with the Current-to-Voltage Converter and Switchover/Trip Bistable are used to determine the RE as follows:

$$RE = \pm \sqrt{IVv^2 + Bv_{Steam\text{-}LL}^{\ 2}}$$

Where:

IVv	= ± 0.5 % span	Section 8.1.15
$Bv_{Steam\text{-}LL}$	= ± 0.2 % span	Section 8.1.33

$$RE_{as\text{-}left} = \pm \sqrt{0.5^2 + 0.2^2}$$

$RE_{as\text{-}left} = \pm 0.5385$ % span

Converting from % span to Vdc:

$RE_{as\text{-}left} = \pm 0.5385$ % span * (10 Vdc / 100 % span)
$RE_{as\text{-}left} =$ **± 0.054 Vdc**

Converting from % span to psig:

$RE_{as\text{-}found} = \pm 0.5385$% span * (30 psig / 100 % span)
$RE_{as\text{-}found} =$ **0.162 psig**

$Margin_{SWITCHOVER/TRIP\text{-}Steam\ As\text{-}Found}^{-} = (LTSP_{SWITCHOVER/TRIP\text{-}Steam} + RE_{as\text{-}found}^{+}) - FTSP_{SWITCHOVER/TRIP\text{-}Steam}$

Substituting:

$Margin_{SWITCHOVER/TRIP\text{-}Steam\ As\text{-}Found}^{-} = |(5.7\ psig + 0.236\ psig) - 6.0\ psig|$

$Margin_{SWITCHOVER/TRIP\text{-}Steam\ As\text{-}Found}^{-} = 0.064$ psig

The newly recommended switchover/trip setpoint of 6.0 psig is acceptable. Therefore,

$FTSP_{SWITCHOVER/TRIP\text{-}Steam\text{-}new}$ = 6.0 psig

Converting from psig to Vdc and conservatively rounding up to the precision of the setpoint:

$FTSP_{SWITCHOVER/TRIP\text{-}Steam\text{-}new}$ = 6.0 psig * (10 Vdc / 30 psig)

$FTSP_{SWITCHOVER/TRIP\text{-}Steam\text{-}new}$ = 2.000 Vdc

8.6.2 Steam Driven Pump 1(2)P-29 Low Suction Pressure Alarm Setpoint

Per Section 6.6, the Analytical Limit for the AF Low Pressure Suction Switchover/Trip is 5.241 psig. This analytical limit will also be used to evaluate the Lo Suction Pressure Alarm.

The random component of $TLE_{ALARM\text{-}STEAM}$ was converted (for a single-sided approach) from 2.073 % span to 1.740 % span in Section 8.4.2.

Substituting:

$SP_{ALARM\text{-}Steam}$ = 5.241 psig + (1.740 % * 30 psig)

$SP_{ALARM\text{-}Steam}$ = 5.241 psig + 0.522 psig

$SP_{ALARM\text{-}Steam}$ = 5.763 psig

Per Reference P.3 and P.4, the existing 1(2)P-29 AF Pump Lo Suction Pressure Alarm Setpoint (FTSP) is 7.1 psig (decreasing). Per Section 2.0, the existing alarm setpoint (FTSP) is acceptable if it is:

1) Greater than (or equal to) the setpoint calculated in this section (SP)
2) 0.5 psig above the AFP Low-Low Suction Pressure Switchover/Trip Setpoint.

$FTSP \geq SP$

7.0 psig is greater than or equal to 5.763 psig.

Although the existing FTSP is greater than (or equal to) the setpoint calculated in this section (SP), it is much greater than 0.5 psig above the AFP Low-Low Suction Pressure Switchover/Trip Setpoint (based on the switchover/trip setpoint change prescribed in Section 8.6.1 of this calculation).

As such, the existing alarm setpoint of 7.1 psig will be changed to 6.5 psig to preserve the existing 0.5 psig increment between the switchover/trip and alarm setpoints and meet the alarm setpoint acceptance criteria.

Therefore, the newly recommended Lo Suction Pressure Alarm setpoint is:

$FTSP_{ALARM\text{-}Steam\text{-}new}$ = 6.5 psig

Converting from psig to mAdc and conservatively rounding up to the precision of the setpoint:

$FTSP_{ALARM\text{-}Steam\text{-}new}$ = 6.5 psig * [(20 mAdc – 4 mAdc) / 30 psig)] + 4 mAdc

$FTSP_{ALARM\text{-}Steam\text{-}new}$ = 7.47 mAdc

9.0 RESULTS AND CONCLUSIONS, WITH LIMITATIONS

9.1 Loop Uncertainties

The Seismic loop uncertainties (concurrent with accident environments) for Auxiliary Feedwater Pump Low Suction Pressure are summarized below.

95% / 95% Confidence	Seismic Conditions (concurrent with accident environments)		Reference
	% span	psig	
$TLE_{SWITCHOVER/TRIP\text{-}STEAM}$	± 1.450	± 0.435	8.4.1
$TLE_{ALARM\text{-}STEAM}$	± 1.740	± 0.522	8.4.2

9.2 Field Switchover/Trip Setpoint (FTSP) and Calculated Switchover/Trip Setpoint (SP)

This calculation has determined that the existing Field Trip Setpoints (FTSP) for Auxiliary Feedwater Low Suction Pressure Alarm and Low-Low Suction Pressure Trip should be revised to meet the setpoint acceptance criteria prescribed in Section 2.0 of this calculation. The setpoint summary is shown in the table below.

Setpoint Function	Calculated SP	Existing FTSP		Newly Recommended FTSP		Reference
1(2)P-29 Steam Driven AFP Low-Low Suction Pressure Switchover/Trip	5.676 psig	6.6 psig	0.660 Vdc	6.0 psig	2.000 Vdc	8.6.1, P.3, P.4
1(2)P-29 Steam Driven AFP Lo Suction Pressure Alarm	5.763psig	7.1 psig	5.14 mAdc	6.5 psig	7.47mAdc	8.6.2, P.3, P.4

9.3 Acceptable As-Left and As-Found Tolerances

This calculation has determined the Acceptable As-Found and As-Left Tolerances for the instruments listed in Section 1.5. The values are rounded to the precision of the calibration procedures. The new As-Found and As-Left Tolerances should be incorporated into the affected calibration procedures identified in Section 10.0.

Refer to Section 8.5.1 for As-Found Tolerances and Section 8.5.2 for As-Left Tolerances.

Table 9.3-1

Steam Driven Pump Suction Pressure Instrumentation As-Left/As-Found Values

	Pressure Transmitters 1(2)PT-4044A	I/V Converters 1(2)PQ-4044	V/I Converters 1(2)PM-4044-3	Switchover/ Trip & Alarm Bistable Units	
				1(2)PC-4044-LL (Switchover/ Trip)	1(2)PC-4044-L (Alarm)
As-Left	± 0.04 mAdc	± 0.050 Vdc	± 0.08 mAdc	± 0.020 Vdc	± 0.03 mAdc
As-Found	±0.10mAdc	± 0.057 Vdc	± 0.11 mAdc	± 0.054 Vdc	± 0.08 mAdc

Table 9.3-2

Steam Driven Pump Suction Pressure Instrumentation Channel Operability Testing Rack Error As-Found Values

	Rack Error – Channel Operability Testing
As-Left	± 0.054 Vdc
As-Found	± 0.079 Vdc

9.4 Limitations

9.4.1 Aux. Feed Pump Cubicle Area Environmental Limitations

The results of this calculation are valid only if the temperature inside of the AFP Cubicle Cabinets (1(2)C-197) does not exceed 120 °F. AR 524983, Action Item #2, (previously CA 028602) has been generated to track this limitation.

9.4.2 Computer Room Temperature Limitations

The results of this calculation are valid only if the temperature inside of the Computer Room instrumentation panels does not exceed 120 °F. GAR 01031656 has been generated to track this limitation.

9.4.3 M&TE Limitations

To preserve the validity of this calculation's results, this calculation requires that all future calibrations of the equipment (addressed in this calculation) be performed using the M&TE mentioned below (or better).

M&TE	Range	Accuracy	Readability	Reference
Fluke 45	0-10 Vdc	0.025 % reading	0.006 Vdc	8.1.14, 8.1.23, 8.1.32
Fluke 45	0-30 mA	0.05 % reading	0.003 mA	8.1.3, 8.1.14, 8.1.23, 8.1.32
HP 34401A	0-10 Vdc	0.0035 % reading + 0.0005 % range	0.00001 Vdc	8.1.14, 8.1.23, 8.1.32
HP 34401A	0-100 mAdc	0.050 % reading + 0.005 % range	0.0001 mAdc	8.1.3, 8.1.14, 8.1.23, 8.1.32
Ashcroft 452074SD02L	30 psig	+0.25 % FS	0.001 psig	8.1.3
McDaniels	30 psig	+0.50 % FS	0.05 psig	8.1.3

9.4.4 Not Used.

9.4.5 Not Used.

9.4.6 Implementation of EC-13407

This calculation has an imposed condition requiring documents P.1, P.2, P.3, P.4, D.2, D.3, D.4 and all impacted equipment to be modified to incorporate the changes per EC-13407 and minor revisions of this calculation.

This calculation creates an imposed condition requiring transmitters 1PT-4044A and 2PT-4044A be installed at an elevation 12.08' or higher and orientation such that the Analytical Limit calculated in Section 6.6 is conservative and remains valid.

9.5 Graphical Representation of Revised Setpoints and Tolerances

9.5.1 Steam Driven Low-Low Suction Pressure Trip (Bistable Only)

Steam Driven Pump Low-Low Suction Pressure Switchover / Trip Setpoint

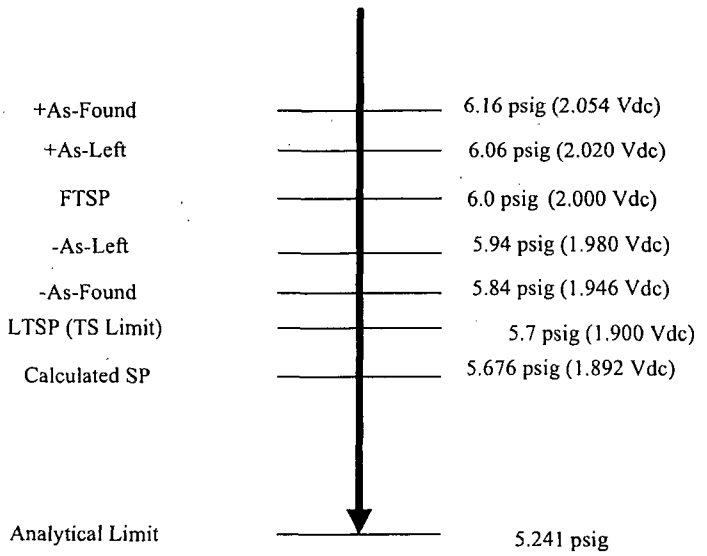

9.5.2 Steam Driven Low-Low Suction Pressure Trip Rack Error – Channel Operability Testing

Steam Driven Pump Low-Low Suction
Pressure Switchover / Trip Setpoint Rack Error – Channel Operability Testing

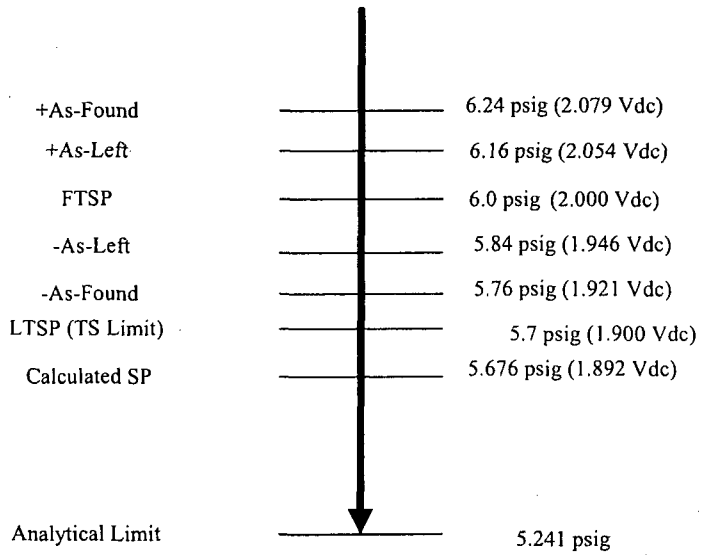

9.5.3 Steam Driven Low Suction Pressure Alarm

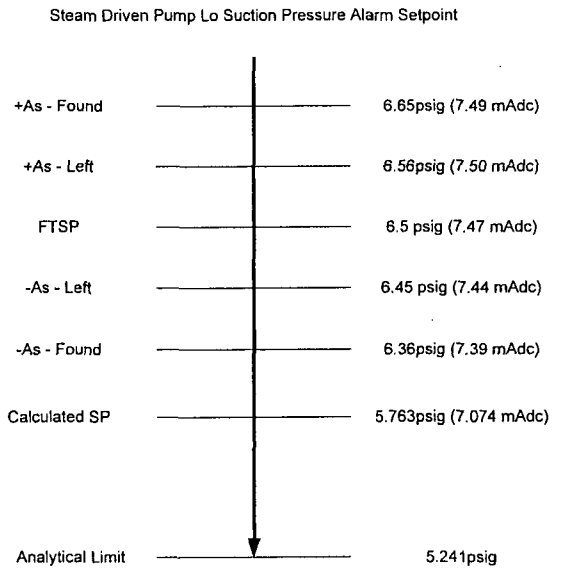

9.5.4 Technical Specification Value

The requirement for the Limiting Safety System Setting (LSSS) to be in the Technical Specification is met by specifying a value in the Specifications that is the least conservative value that the LTSP can have during testing along with requiring that the LTSP and methodology for determining the LPST must be in a document controlled under 10 CFR 50.59.

Using the setpoint acceptance criteria prescribed in Section 2.0 for a decreasing setpoint Section 8.6.1 determined the LTSP to be as follows:

$$LTSP_{SWITCHOVER/TRIP\text{-}Steam\text{-}new} = 5.7 \text{ psig}$$

The LTSP provided in this calculation is based upon the design of the new unitized Auxiliary Feedwater System to be installed as part of the extended power uprate (EPU) at Point Beach Nuclear Plant Units 1 and 2. The LTST provides the information for Technical Specification Table 3.3.2-1, Engineered Safety Feature Actuation System Instrumentation, .Function Item 6.e for AFW Pump Suction Transfer on Suction Pressure Low. The LSSS for Function 6.e. is proposed to be 5.7 psig.

It is noted that the Technical Specification value is taken based on the LTSP. Exception has been taken to Reference G.1 Section 3.3.8.4.3 which calculates the Allowable Value under Method 3 of ISA 67.04.02 and, as such is not take as the Technical Specifications value.

10.0 IMPACT ON PLANT DOCUMENTS

Note: Passport Engineering Change (EC) Number for Calculation 97-0231 is 14048.

- PBNP-IC-42, Rev. 1, "Condensate Storage Tank Water Level Instrument Loop Uncertainty/ Setpoint Calculation"

  The AFP Pressure Switchover/Trip setpoint per this calculation is input to PBNP-IC-42 for determining the CST water level instrument loop uncertainties and the adequacy of CST water level setpoints.

- 97-0215-002-A, Rev. 5, "Water Volume Swept by all four AFW Pumps following a Seismic /Tornado Event affecting both Units."

  To ensure that this trip initiation provides protection for the AFW pumps, the minimum volume of 512 gallons in the protected piping (corresponding to EL. 24.17 feet) must be used in Calculation 97-0215 for ensuring that sufficient water (including water pumped during the associated trip time delay) is available to supply the AFPs until they automatically trip, thus preventing damage to the pump.

- 1ICP 04.003-5, Rev. 12, "Auxiliary Feedwater Flow and Pressure Instruments Outage Calibration"

  - Revise procedure to include the new pressure transmitter 1PT-4044A.

- 2ICP 04.003-5, Rev. 13, "Auxiliary Feedwater Flow and Pressure Instruments Outage Calibration"

  Revise procedure to include the new pressure transmitter 2PT-4044A.

- 1ICP 04.032-1, Rev. 15, "Auxiliary Feedwater System and Charging Flow Electronic Outage Calibration"

  Revise procedure to include the new pressure transmitter 1PT-4044A. New As-Found Tolerances for the Steam Driven Suction Pressure Rack Components need to be incorporated. New Switchover/Trip and Alarm setpoints for the Suction Pressure Bistable units need to be incorporated.

- 2ICP 04.032-1, Rev. 13, "Auxiliary Feedwater System and Charging Flow Electronic Outage Calibration"

  Revise procedure to include the new pressure transmitter 2PT-4044A. New As-Found Tolerances for the Steam Driven Suction Pressure Rack Components need to be incorporated. New Switchover/Trip and Alarm setpoints for the Suction Pressure Bistable units need to be incorporated.

- STPT 14.11, Rev. 20, "Auxiliary Feedwater"

  New Switchover/Trip and Alarm setpoints for the Suction Pressure Bistable unit need to be incorporated.

11.0 ATTACHMENT LIST

Attachment A (Ref. G.6), Walkdown, Pressure Transmitter Elevation and Pressure Tap Elevation (6 pages).

Attachment B, Instrument Scaling (5 pages).

Attachment C (Ref. G.11), Walkdown, ICTI-621 and ICTI-797 Readability (3 pages)

ATTACHMENT A

PART 1 - WALKDOWN REQUEST FORM

Calculation No. 97-0231

Walkdown Location (Bldg/Elev/Room/Column Lines)
Control Building / Elevation 8' / Auxiliary Feedwater Pump Rooms

Scope
Determine the distance between transmitters PT-4042, PT-4043, 1PT-4044 and 2PT-4044 and their corresponding pipe centerline.

Also, determine the distance between the transmitters listed above and their corresponding pressure tap.

References:

Data Tolerance Requirements

S&L Lead W. Barasa Signature [signature] Date 8-10-05

ATTACHMENT A

PART 2 - WALKDOWN DATA COLLECTION FORM

Results

See attached diagram for each pressure transmitter (4 pages total).

NICK VILLONE	[signature]	8/10/05
Data Taker Name	Signature	Date
[signature]	H O Flynn	8/10/05
Independent Verifier Name	Signature	Date

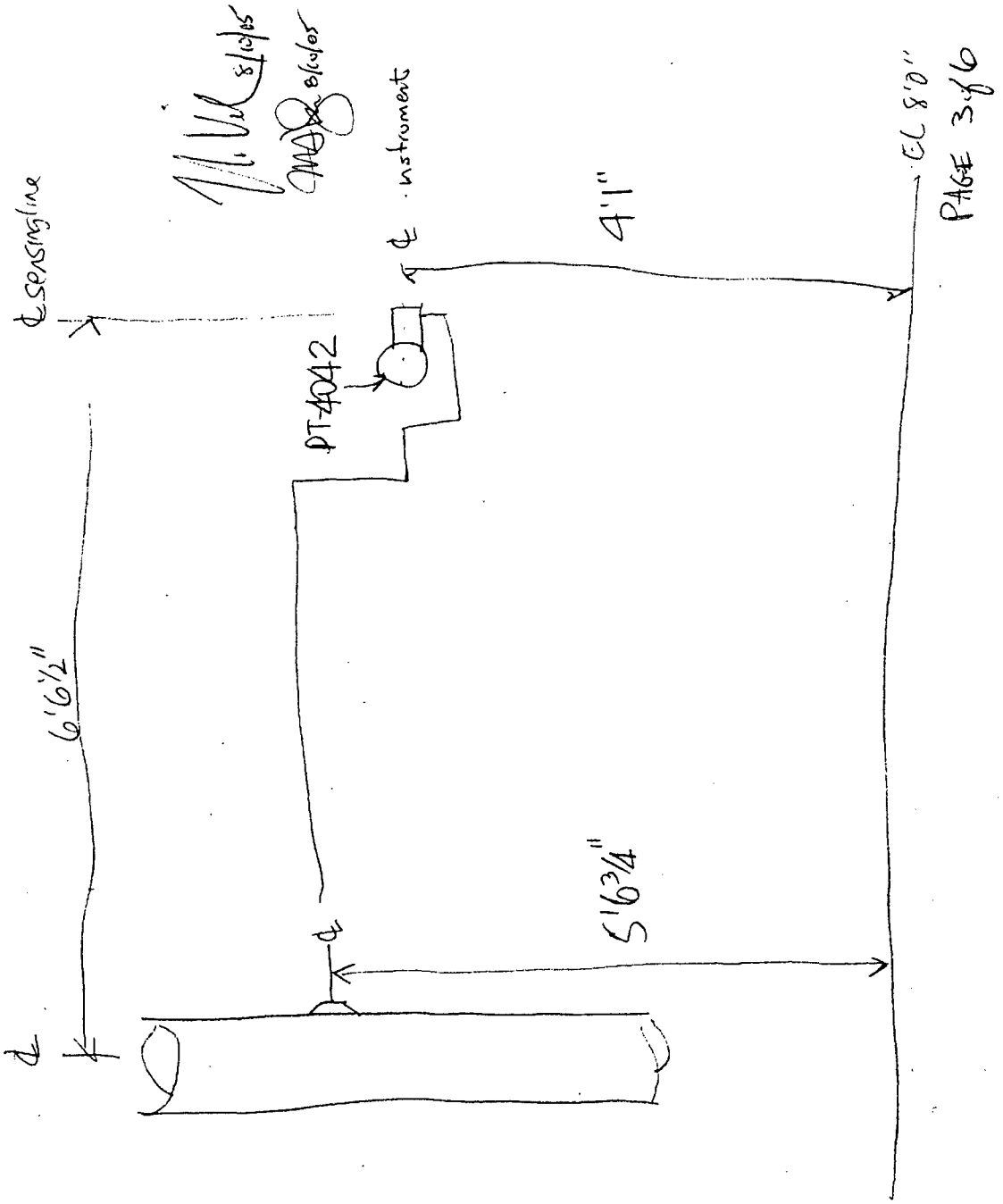
℄ sensing line
6'6½"
℄
PT-4042
℄ instrument
4'1"
5'6¾"
℄
EL 8'0"
PAGE 3 of 6

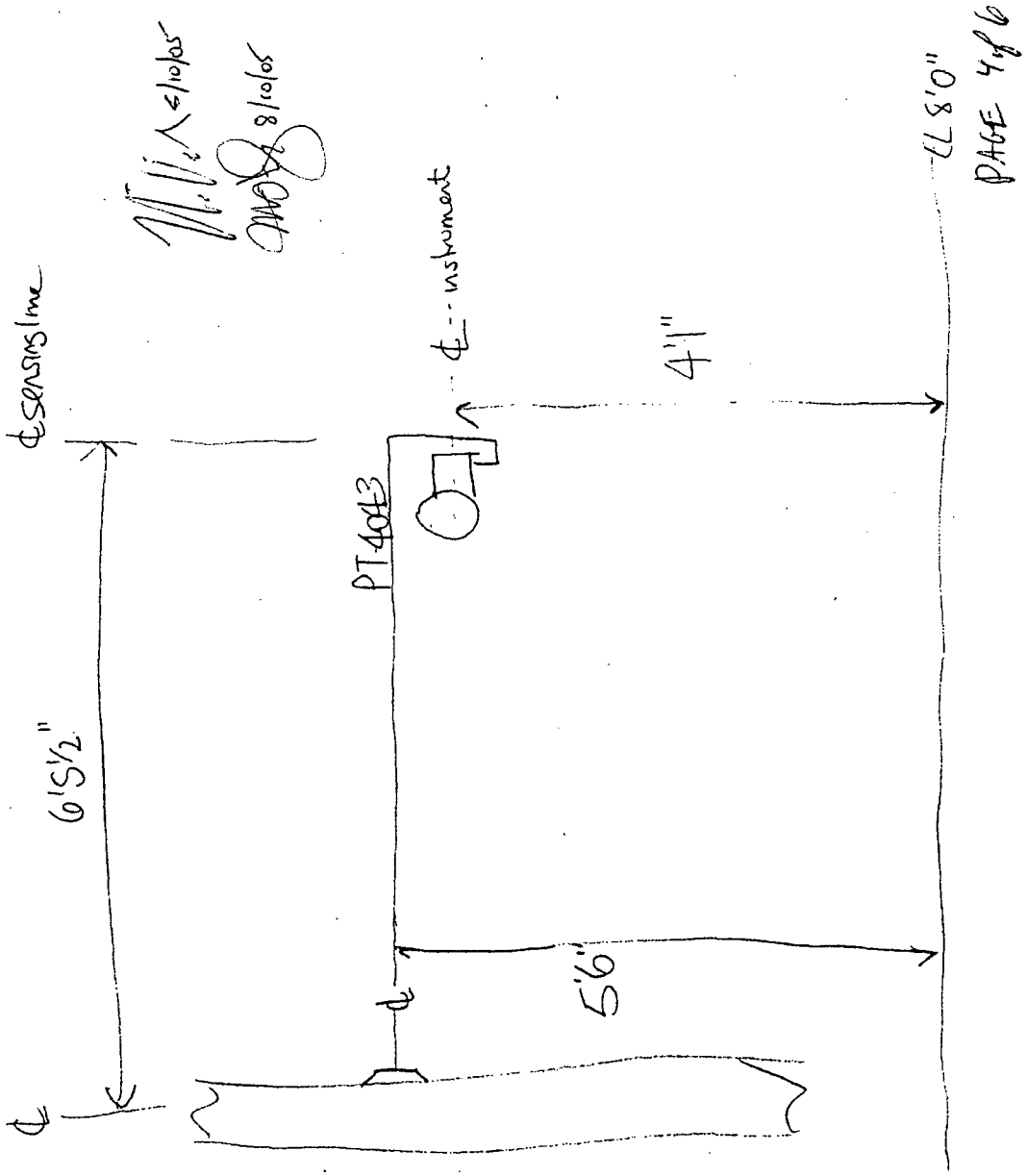
℄ sensing line
6'5½"
PT 4043
℄ - instrument
5'6"
4'1"
7'8'0"
PAGE 4 of 6
8/10/05
8/10/05

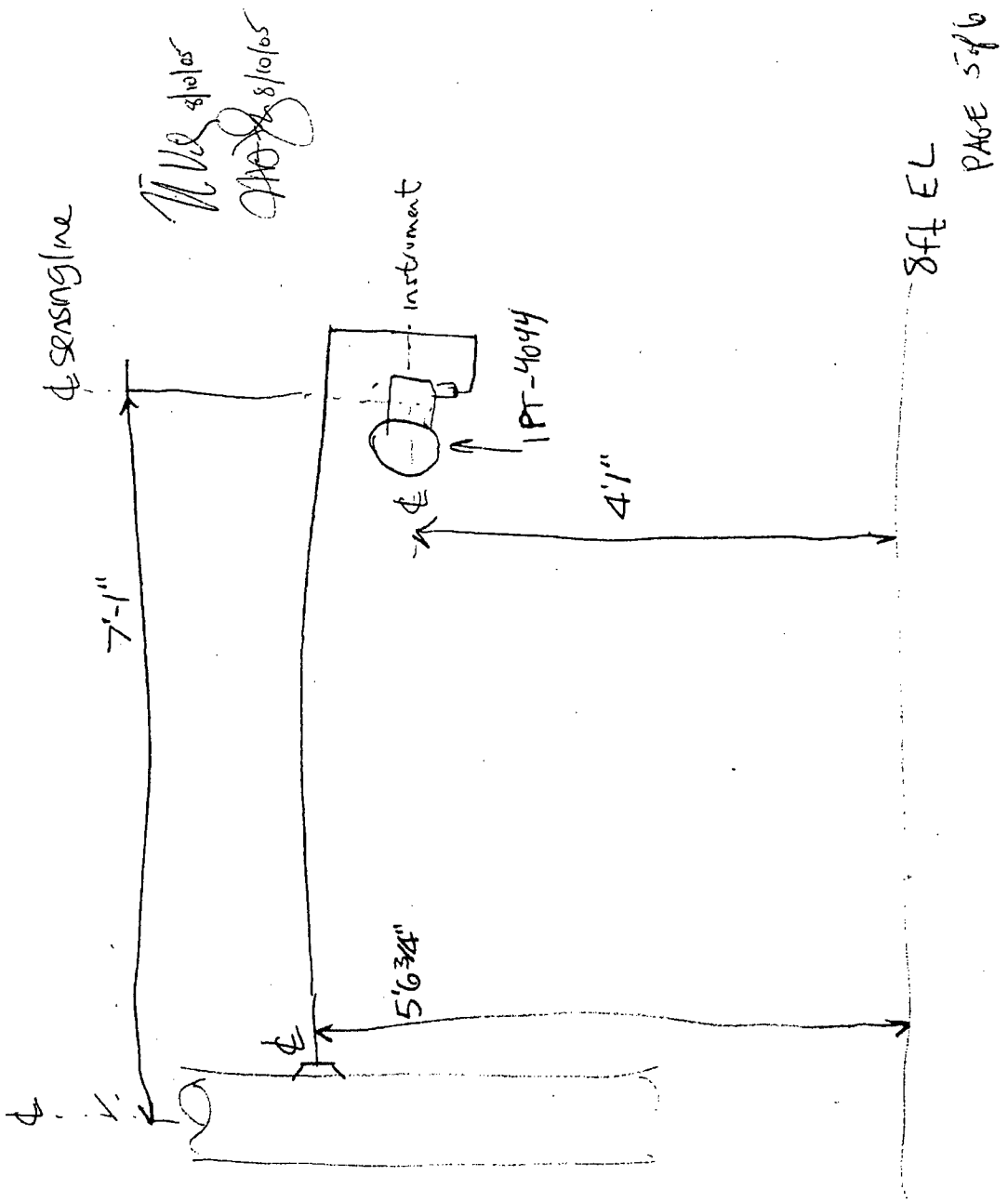
8/10/05
8/10/05
℄ sensing line
instrument
PT-4044
℄
4'-1"
8ft EL
PAGE 5 of 6
7'-1"
5'6 3/4"
℄
℄

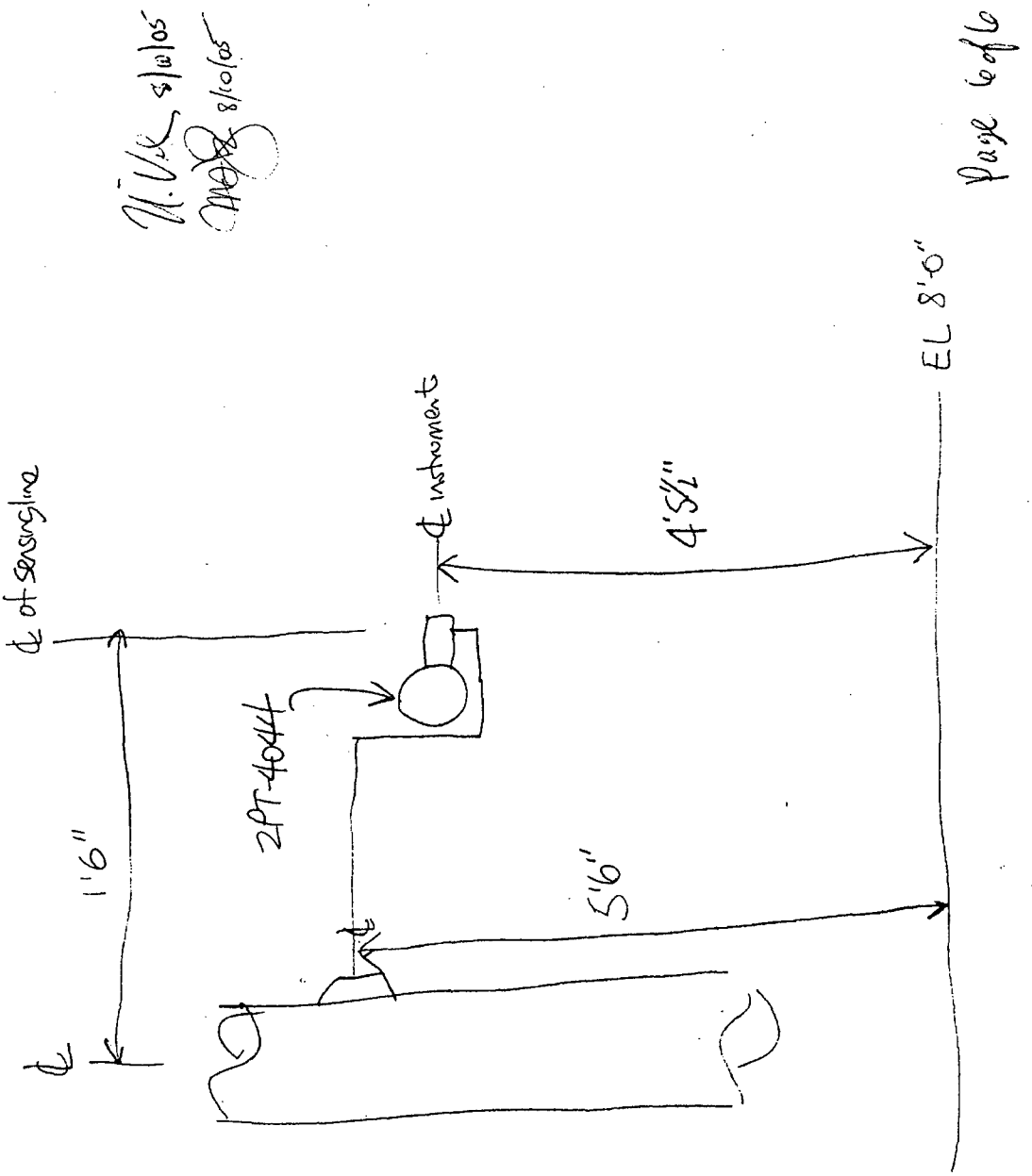
N. Vu 8/10/05
8/10/05
℄ of sensing line
℄ instrument
EL 8'-0"
1'6"
2PT-4044
4'5½"
5'6"
℄

Page 6 of 6

ATTACHMENT B

Instrument Scaling

This calculation has determined Acceptable As-Found Tolerances for all instruments identified in Section 1.5 in addition to new setpoint values and new Acceptable As-Left Tolerances for PT-4042 and PT-4043. The following tables illustrate the necessary modifications to calibration procedures P.1 through P.4 to account for these new tolerance values. The boxed-in fields represent the necessary changes; all other fields are provided for completeness only.

For 1ICP 04.003-5:

EQUIPMENT ID: 1PT-4044A	MANUFACTURER: Rosemount
DESCRIPTION: P-29 AFP Suction Pressure	MODEL NUMBER: 3051NG3A02A1JH2B2
SCALING: 0.0 – 30 psig / 4.00 – 20.00 mAdc	LOCATION: El. 8', CB, AFP RM 1P-29 CUB

INPUT	OUTPUT			LIMITS			
				As-Found		As-Left	
psig	IDEAL mAdc	AS FOUND mAdc	AS LEFT mAdc	Low mAdc	High mAdc	Low mAdc	High mAdc
0	4.00			3.9	4.1	3.96	4.04
7.5	8.00			7.9	8.1	7.96	8.04
15	12.00			11.9	12.1	11.96	12.04
22.5	16.00			15.9	16.1	15.96	16.04
30	20.00			19.9	20.1	19.96	20.04
22.5	16.00			15.9	16.1	15.96	16.04
15	12.00			11.9	12.1	11.96	12.04
7.5	8.00			7.9	8.1	7.96	8.04
0	4.00			3.9	4.1	3.96	4.04

ATTACHMENT B

For 2ICP 04.003-5:

EQUIPMENT ID: 2PT-4044A	MANUFACTURER: Rosemount
DESCRIPTION: P-29 AFP Suction Pressure	MODEL NUMBER: 3051NG3A02A1JH2B2
SCALING: 0.0 – 30 psig / 4.00 – 20.00 mAdc	LOCATION: El. 8', CB, AFP RM 2P-29 CUB

INPUT	OUTPUT			LIMITS			
				As-Found		As-Left	
psig	IDEAL mAdc	AS FOUND mAdc	AS LEFT mAdc	Low mAdc	High mAdc	Low mAdc	High mAdc
0	4.00			3.9	4.1	3.96	4.04
7.5	8.00			7.9	8.1	7.96	8.04
15	12.00			11.9	12.1	11.96	12.04
22.5	16.00			15.9	16.1	15.96	16.04
30	20.00			19.9	20.1	19.96	20.04
22.5	16.00			15.9	16.1	15.96	16.04
15	12.00			11.9	12.1	11.96	12.04
7.5	8.00			7.9	8.1	7.96	8.04
0	4.00			3.9	4.1	3.96	4.04

ATTACHMENT B

For 1ICP 04.032-1 (Data Sheet 5):

EQUIPMENT ID: 1PC-4044-LL					MANUFACTURER: Foxboro		
DESCRIPTION: 1P-29 AFP Suction Header Pressure Bistable					MODEL NUMBER: 2AP+ALM-AR		
SCALING: 0.0 – 30.0 psig					LOCATION: Rack: 1C-197; N1, S4		
PROCESS SETPOINT	INPUT Vdc	OUTPUT					
PSIG	Setpoint Vdc	As-Found Limits (Vdc)		As-Found (Vdc)	As-Left Limits (Vdc)		As-Left (Vdc)
		Low	High		Low	High	
6.0 ↓	1.2.000 ↓	1.946	2.054		1.980	2.020	
REMARKS							

EQUIPMENT ID: 1PC-4044-L					MANUFACTURER: Foxboro		
DESCRIPTION: 1P-29 AFP Suction Header Pressure Bistable					MODEL NUMBER: 2AP+ALM-AR		
SCALING: 4.0 – 20.00 mAdc / 0 – 30.0 psig					LOCATION: Rack: 1C-171B-F; N5, S3		
PROCESS SETPOINT	*INPUT mAdc	OUTPUT					
PSIG	Setpoint mAdc	As-Found Limits (mAdc)		As-Found (mAdc)	As-Left Limits (mAdc)		As-Left (mAdc)
		Low	High		Low	High	
6.5 ↓	7.47 ↓	7.39	7.55		7.44	7.50	
Annunciator Check	C01 A, Annunciator 4-9, "AUX FEED PUMP SUCTION PRESSURE LOW"						INITIALS _____
REMARKS	* 4 – 20 mADC is input at 1C171A-R, TB-3, terminals 33 (+) and 34 (-). Field wire lifted and input current leads across resistor						

ATTACHMENT B

For 2ICP 04.032-1 (Data Sheet 5):

EQUIPMENT ID: 2PC-4044-LL					MANUFACTURER: Foxboro		
DESCRIPTION: 2P-29 AFP Suction Header Pressure Bistable					MODEL NUMBER: 2AP+ALM-AR		
SCALING: 0.0 – 30.0 psig					LOCATION: Rack: 2C-197; N1, S4		
PROCESS SETPOINT	INPUT Vdc	OUTPUT					
PSIG	Setpoint Vdc	As-Found Limits (Vdc)		As-Found (Vdc)	As-Left Limits (Vdc)		As-Left (Vdc)
		Low	High		Low	High	
6.0 ↓	2.000 ↓	1.946	2.054		1.980	2.020	
REMARKS							

EQUIPMENT ID: 2PC-4044-L					MANUFACTURER: Foxboro		
DESCRIPTION: 2P-29 AFP Suction Header Pressure Bistable					MODEL NUMBER: 2AP+ALM-AR		
SCALING: 4.0 – 20.00 mAdc / 0 – 30.0 psig					LOCATION: Rack: 2C-173B-F; N3, S8		
PROCESS SETPOINT	*INPUT mAdc	OUTPUT					
PSIG	Setpoint mAdc	As-Found Limits (mAdc)		As-Found (mAdc)	As-Left Limits (mAdc)		As-Left (mAdc)
		Low	High		Low	High	
6.5 ↓	7.47 ↓	7.39	7.55		7.44	7.50	
Annunciator Check	C01 A, Annunciator 4-9, "AUX FEED PUMP SUCTION PRESSURE LOW"						INITIALS _____
REMARKS	* 4 – 20 mADC is input at 2C173A-R, TB-3, terminals 83 (+) and 84 (-). Field wire lifted and input current leads across resistor						

ATTACHMENT B

Per Section 9.4, to preserve the validity of this calculation's results, this calculation requires that all future calibrations of the equipment (addressed in this calculation) be performed using the M&TE mentioned below (or better). This table needs to be implemented in calibration procedures 1(2)ICP 04.003-5 and 1(2)ICP 04.032-1 to provide the calibrator with a list of acceptable M&TE equipment.

M&TE	Range	Accuracy	Readability
Fluke 45	0-10 Vdc	0.025 % reading	0.006 Vdc
Fluke 45	0-30 mA	0.05 % reading	0.003 mA
HP 34401A	0-10 Vdc	0.0035 % reading + 0.0005 % range	0.00001 Vdc
HP 34401A	0-100 mAdc	0.050 % reading + 0.005 % range	0.0001 mAdc
Ashcroft 452074SD02L	30 psig	+0.25 % FS	0.001 psig
McDaniels	30 psig	+0.50 % FS	0.05 psig

ATTACHMENT C

PART 1 - WALKDOWN REQUEST FORM

Calculation 97-0231-002-B

Walkdown Location (Bldg/Elev/Room/Column Lines)

Scope

The purpose of this walk down is to provide input to Calc. 97-0231-002-B for the readability of the following M&TE equipment:

- ICTI-621 : Ashcroft 452074SD02L 30 psi Digital Gauge
- ICTI-797 : McDaniels 30 psi gauge

Documentation will be provided via photographs.

References: ICI 12

Data Tolerance Requirements

S&L Lead Nicholas Vilione Signature Date 5/28/2009

ATTACHMENT C

PART 2 - WALKDOWN DATA COLLECTION FORM

Results

See photographs.

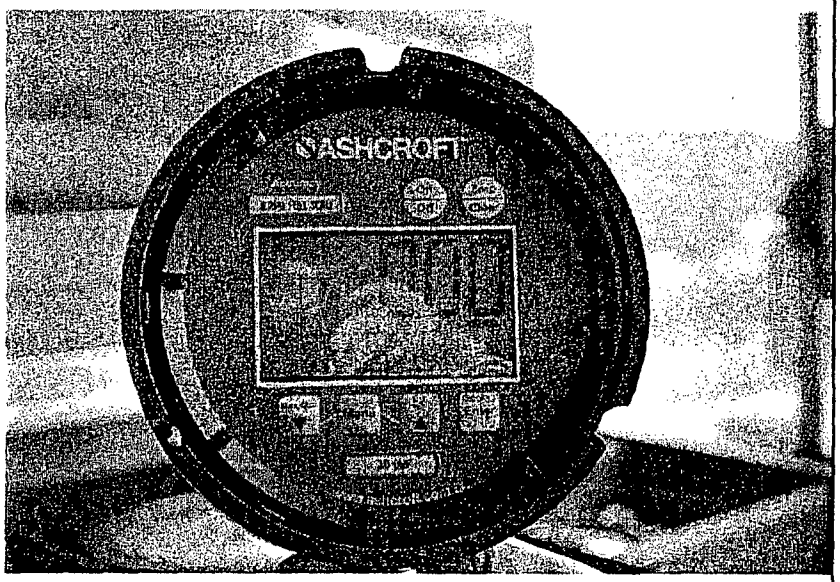

The least significant digit of ICTI-621 is 3 digits to the right of the decimal.

ATTACHMENT C

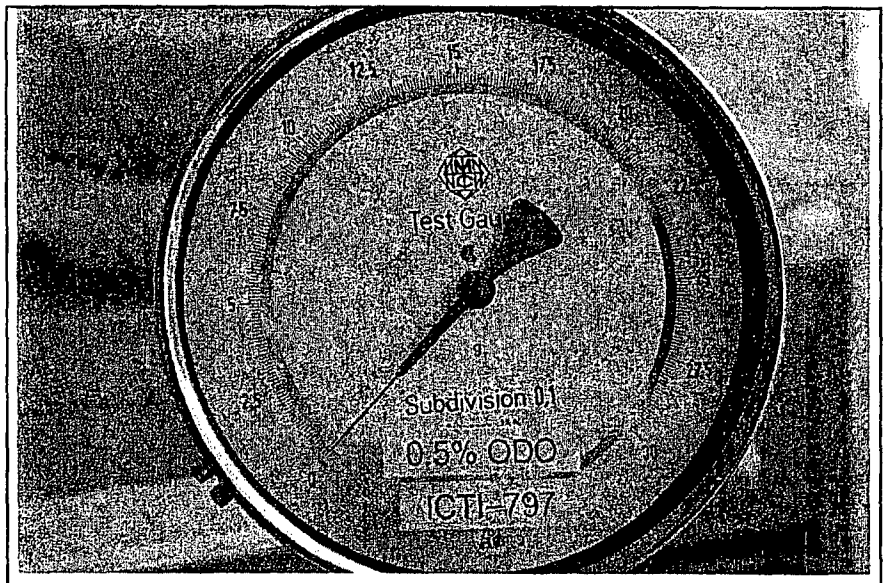

The subdivisions of ICTI-797 are 0.1psi.

Nicholas Vilione		5-28-09
Data Taker Name	Signature	Date
Steven Barwin	Steve Barwin	5-28-09
Independent Verifier Name	Signature	Date