10 CFR 50.55a

VIRGINIA ELECTRIC AND POWER COMPANY
RICHMOND, VIRGINIA 23261

November 24, 2009

U.S. Nuclear Regulatory Commission
Attention: Document Control Desk
Washington, D.C. 20555

Serial No. 09-715
NL&OS/ETS R0
Docket Nos. 50-338/339
License Nos. NPF-4/7

VIRGINIA ELECTRIC AND POWER COMPANY (DOMINION)
NORTH ANNA POWER STATION UNITS 1 AND 2
FOURTH INTERVAL INSERVICE TESTING PROGRAM PLAN
AND PROPOSED ALTERNATIVES AND RELIEF REQUESTS

Dominion hereby submits the fourth interval Inservice Testing (IST) Program Plans for North Anna Power Station Units 1 and 2. Pursuant to 10 CFR 50.55a(f)(4)(ii), the IST programs were updated to comply with the ASME Code for Operations and Maintenance of Nuclear Power Plants 2004 Edition. The attached IST Program Plans describe the programmatic aspects of the IST programs and include the associated proposed alternatives and relief requests for the fourth interval.

Pursuant to 10 CFR 50.55a (a)(3)(i) and 10 CFR 50.55a(f)(6)(i), Dominion is requesting the use of alternative testing requirements (P-1 through P-8 for pumps and V-1 through V-3 for valves) - in place of certain 2004 ASME Code testing requirements. The proposed alternatives or relief requests from specific 2004 Code testing requirements are included in the attached IST Program Plans. The North Anna Units 1 and 2 fourth interval IST Program Plans and proposed alternatives and relief requests have been reviewed and approved by the station's Facility Safety Review Committee.

The fourth IST interval will begin on December 15, 2010 and North Anna Units 1 and 2 will begin implementation of the plans on that date. Therefore, Dominion requests review and approval of the attached relief requests by December 1, 2010.

If you have any questions or require additional information, please contact Mr. Thomas Shaub at (804) 273-2763.

Respectfully,

J. Alan Price
Vice President – Nuclear Engineering

Commitments made in this letter: None

Attachments

1. North Anna Unit 1 fourth interval Inservice Testing Program Plan
2. North Anna Unit 2 fourth interval Inservice Testing Program Plan

A047
NRR

cc: U.S. Nuclear Regulatory Commission
Region II
Sam Nunn Atlanta Federal Center
61 Forsyth Street, SW
Suite 23T85
Atlanta, Georgia 30303

Mr. J. E. Reasor, Jr.
Old Dominion Electric Cooperative
Innsbrook Corporate Center
4201 Dominion Blvd.
Suite 300
Glen Allen, Virginia 23060

NRC Senior Resident Inspector
North Anna Power Station

Ms. K. R. Cotton
NRC Project Manager
U. S. Nuclear Regulatory Commission
One White Flint North
Mail Stop O-8 G9A
11555 Rockville Pike
Rockville, Maryland 20852

Dr. V. Sreenivas
NRC Project Manager
U. S. Nuclear Regulatory Commission
One White Flint North
Mail Stop O-8 G9A
11555 Rockville Pike
Rockville, Maryland 20852

Attachment 1

FOURTH INTERVAL INSERVICE TESTING PROGRAM PLAN

DECEMBER 15, 2010 THROUGH DECEMBER 14, 2020

North Anna Power Station
Unit 1
Virginia Electric and Power Company
(Dominion)

VIRGINIA ELECTRIC AND POWER COMPANY
(DOMINION)

NORTH ANNA POWER STATION UNIT 1

INSERVICE TESTING PROGRAM PLAN

FOR PUMPS AND VALVES

FOURTH INSPECTION INTERVAL

DECEMBER 15, 2010 - DECEMBER 14, 2020

REVISION 0

COMMERCIAL OPERATION: JUNE, 1978

ADDRESSES:

VIRGINIA ELECTRIC AND POWER COMPANY
P. O. BOX 26666
RICHMOND, VIRGINIA 23261

NORTH ANNA POWER STATION
P. O. BOX 402
MINERAL, VIRGINIA 23117

N1PVI4

TABLE OF CONTENTS

INSERVICE TESTING PROGRAM PLAN FOR PUMPS AND VALVES

1.0 INTRODUCTION

2.0 GENERAL PROGRAM DEVELOPMENT

- 2.1 Program Scope
- 2.2 Program Update

3.0 PUMP INSERVICE TEST PROGRAM DESCRIPTION

- 3.1 Program Development Philosophy
- 3.2 Program Implementation
- 3.3 Program Administration
- 3.4 Pump Reference List
- 3.5 Pump Inservice Test Table
- 3.6 Pump Test Program Relief Requests
- 3.7 Alternative Testing for Non-Code Pumps

4.0 VALVE INSERVICE TEST PROGRAM DESCRIPTION

- 4.1 Program Development Philosophy
- 4.2 Program Implementation
- 4.3 Program Administration
- 4.4 Valve Inservice Test Table
- 4.5 Valve Test Program Relief Requests
- 4.6 Valve Test Program Cold Shutdown Justifications
- 4.7 Valve Test Program Reactor Refueling Justifications
- 4.8 Alternative Testing for Non-Code Valves

5.0 TECHNICAL POSITIONS

6.0 REPORTING OF INSERVICE TEST RESULTS

- 6.1 Pump Inservice Test Program
- 6.2 Valve Inservice Test Program

7.0 QUALITY ASSURANCE PROGRAM

INSERVICE TESTING PROGRAM FOR PUMPS AND VALVES

1.0 INTRODUCTION

This Pump and Valve Inservice Test (IST) Program Plan is applicable to the North Anna Power Station Unit 1 which received its construction permit on February 19, 1971 and began commercial operation in June 1978. North Anna Power Station Unit 1 is a Pressurized Water Reactor located on Lake Anna in Louisa County, Virginia. The plant employs a Westinghouse Electric Corp. Nuclear Steam System.

The IST Program Plan is comprised of two subprograms – the IST Program for Pumps and the IST Program for Valves. The development, implementation and administration of these programs are detailed in subsequent sections. This IST Program Plan applies to the fourth 10-year IST interval for North Anna Power Station Unit 1 which starts on December 15, 2010 and ends on December 14, 2020.

The end of the first IST interval for North Anna Unit 1 was extended from June 6, 1988 to December 14, 1990 to coincide with the end of the first inspection interval for North Anna Unit 2. This extension was granted in the form of an exemption to the Code of Federal Regulations, 10CFR50.55a(g)(4) per NRC, dated April 26, 1988. For IST, 10CFR50.55a(g) was subsequently replaced by 10CFR50.55a(f).

2.0 GENERAL PROGRAM DEVELOPMENT

The Code of Federal Regulations, paragraph 10CFR50.55a(f) describes the inservice testing requirements for pumps and valves which are classified as ASME Code Class 1, Class 2 and Class 3. Paragraph 10CFR50.55a(f)(4)(ii) states that,

> "Inservice tests to verify operational readiness of pumps and valves, whose function is required for safety, conducted during successive 120-month intervals must comply with the requirements of the latest edition and addenda of the Code incorporated by reference in paragraph (b) of this section 12 months before the start of the 120-month interval (or the optional ASME Code cases listed in NRC Regulatory Guide 1.147, Revision 15, or 1.192 that are incorporated by reference in paragraph (b) of this section), subject to the limitations and modifications listed in paragraph (b) of this section."

The Code of Federal Regulations, paragraph 10CFR50.55a(b)(3) refers to the ASME Code for Operation and Maintenance (OM) of Nuclear Power Plants, and includes the 2004 Edition. The Code reference became effective on September 10, 2008 and applies to the fourth IST interval for North Anna Unit 1. The IST Program for the fourth IST interval complies with this edition.

The ASME OM Code requires that the owner of each nuclear power plant prepare a "plan" for testing and inspection of systems and components under the jurisdiction of 10CFR50.55a. The Code, Subsection ISTA, General Requirements, Subsection ISTB, Inservice Testing of Pumps, and Subsection ISTC, Inservice Testing of Valves apply to the IST program. Subsections ISTA, ISTB and ISTC establish the IST program scope with the provision that the rules apply only to ASME Code Classes 1, 2 and 3 as stated by the NRC in the Code of Federal Regulations.

In accordance with ASME OM Code-2004, the following are required to be included in the testing program:

1) Certain centrifugal pumps, centrifugal pumps with vertical line shafts and positive displacement pumps that are provided with an emergency power source and required to perform a specific function in shutting down the reactor to the safe shutdown condition, maintaining the safe shutdown condition or mitigating the consequences of an accident.

2) Certain valves and pressure relief devices (and their actuating and position indicating systems) which are required to perform a specific function in shutting down the reactor to the safe shutdown condition, maintaining the safe shutdown condition or mitigating the consequences of an accident.

In addition to the general Code requirements outlined above, there are other interpretations and positions that have come about as a result of past regulatory and licensee actions including Generic Letter 89-04 and NUREG-1482, Guidelines for Inservice Testing at Nuclear Power Plants, Revision 1. Other than these guides, there is no specific guidance for developing the IST Program scope of testing. Therefore, a process was established by which the scope of the North Anna ASME IST Program is determined including components that are to be included and the extent and type of testing required for each. Based on this process, the philosophy and assumptions used in determining the test requirements for selected pumps and valves were documented.

2.1 PROGRAM SCOPE

In the course of developing the program scope, each of the significant safety systems included within the ASME Code Class boundaries and certain safety systems outside of the ASME Code Class boundaries (such as the emergency diesel fuel oil transfer system) were evaluated with respect to the function of each component and the need for its operability as it relates to the scope of the ASME OM Code. Supporting documents used include,

Final Safety Analysis Report (FSAR),
Technical Specifications,
USNRC Regulatory Guide 1.26, Revision 3,
Past program correspondence,
Operating Procedures (normal, emergency and abnormal) and
Plant System Descriptions.

The sequence used during the development effort was as follows:

1) Each of the plant systems was subjected to an overview to determine any potential active safety function as described in the scope statement. Those systems with no safety functions related to the ASME OM Code scope were excluded from further consideration. Plant documents as well as operating staff comments were utilized in this phase.

2) For the remaining systems, flow diagrams were studied and components that could have an active or passive safety function (other than simply maintaining the pressure boundary) were identified for further evaluation.

3) The function of components identified from the flow diagrams was determined based on available documentation, staff review or general experience of the evaluator. Component test requirements were derived based on the component function(s) and Code requirements.

4) Available documents were reviewed and specific or implied component operational requirements were compared to the component functions.

5) The results of the steps described above were reviewed by several knowledgeable members of the plant staff and evaluated for accuracy and consistency, and compiled in an IST basis document. Based on this review, the final program scope was derived and the IST Program Plan developed.

2.2 PROGRAM UPDATE

During the fourth IST interval, it is expected that the scope of the IST Program will occasionally be modified in response to activities including, but not limited to:

1) plant design changes,

2) changes in operating conditions (e.g. normal valve lineup),

3) changes in accident mitigating procedure philosophy and

4) later editions and addenda to the ASME OM Code.

As a result, it is expected that the IST Program will be revised to ensure continued compliance with the Code requirements relating to the scope of the test program. The site supervisor responsible for the IST Program is provided copies of plant modifications that are designated by engineering to have a potential IST impact. Should a change require a program revision, the site IST Program owners would then implement the change to the program plan and the appropriate test procedure(s) in a timely manner.

3.0 PUMP INSERVICE TEST PROGRAM DESCRIPTION

3.1 PROGRAM DEVELOPMENT PHILOSOPHY

North Anna Technical Specification 5.5.7 describes the surveillance requirements that apply to the inservice testing of ASME Code Class 1, 2 and 3 pumps. The North Anna Unit 1 Inservice Testing (IST) Program for Pumps has been established to meet the requirements of 10CFR50, the ASME OM Code, Subsection ISTB and Technical Specifications.

The scope of the program includes ASME Code Class 1, 2 and 3, and certain non-Code class pumps that are required to perform a specific function in shutting down the reactor to the safe shutdown condition, maintaining the safe shutdown condition or mitigating the consequences of an accident.

ISTB defines the rules and requirements of inservice testing of Code Class 1, 2, and 3 pumps and states that each pump to be tested by the rules of this subsection shall be identified by the owner and listed in the plant records.

The purpose of the IST Program Plan is to identify the pumps that are considered by Virginia Electric and Power Company (Dominion) as having a safety function and are therefore subject to the testing requirements of ISTB. The intent of the Code is to assess operational readiness and detect potentially adverse changes in the mechanical condition of these pumps. The relief requests for the IST Program Plan identify Code requirements considered to be impractical or for which an alternate testing method is proposed, provide technical basis for the request and propose alternate testing when warranted.

3.2 PROGRAM IMPLEMENTATION

Surveillance testing is performed to detect equipment malfunction or degradation and to initiate corrective action. The North Anna Power Station Unit 1 IST Program provides a schedule for testing safety-grade pumps and is implemented as part of normal periodic surveillance testing.

Reference data is gathered during initial surveillance tests. With the ASME OM Code, these initial reference tests can be a preservice test in accordance with ISTB-3100 or the first inservice test in accordance with ISTB-3200.

The ASME Code, ISTB-2000 defines pumps as either Group A pumps or Group B pumps. Group A pumps are pumps that are operated continuously or routinely during normal operation, cold shutdown, or

refueling operations. Group B tests apply to Group B pumps are pumps in standby systems that are not operated routinely except for testing.

The Code describes Group A and Group B testing requirements specific to Group A and Group B pumps. The Code also describes comprehensive test requirements. Comprehensive tests apply to both Group A and B pumps and require more accurate pressure instrumentation (0.5% versus 2% for the Group A and B tests), but are performed on a less frequent basis.

The Group A test parameters include differential pressure (or discharge pressure for positive displacement pumps), flow rate, vibration and speed for variable speed pumps. The Group B test parameters include differential pressure for pumps other than positive displacement pumps, flow rate and speed for variable speed pumps. Differential pressure need not be measured for positive displacement pumps. The Group A and B test parameters are typically measured with normal plant instrumentation. If practicable, the Group A and B reference tests shall be performed within ± 20% of the pump design flow rate. If not practicable, the reference test shall be performed at the highest practical flow rate. Comprehensive test parameters include differential pressure (or discharge pressure for positive displacement pumps), flow rate, vibration and speed for variable speed pumps. The comprehensive reference test shall be performed within ± 20% of the pump design flow rate. Any deviation from this requirement for comprehensive tests requires a request for relief from Code provisions.

Group A and B inservice tests shall be performed every three months as required by Table ISTB-3400-1. Any deviation from this test frequency requires a request for relief from Code provisions. During subsequent surveillance tests, flow rate is normally selected as the independent test parameter and is set to match the reference flow rate. Other hydraulic and mechanical performance parameters are measured and evaluated against the appropriate reference values. The results of such evaluations determine whether or not corrective action is warranted. Comprehensive tests are performed every two years in a manner similar to the Group A and B inservice tests.

Each pump in the IST Program is tested according to a detailed test procedure. The procedure includes, as a minimum:

1) References: This section identifies references applicable to Technical Specifications and other necessary material as drawings.

2) Purpose: This section identifies test objectives.

3) Initial Conditions: Each procedure should identify those independent actions or procedures which shall be completed and station conditions which shall exist prior to use.

4) Precautions: Precautions should be established to alert the individual performing the task to those situations in which important measures should be taken early or where extreme care should be used to protect equipment and personnel. Cautionary notes applicable to specific steps in the procedure should be included in the main body of the procedure as appropriate and should be identified as such.

5) Instructions: The main body of a procedure should contain step by step instructions in the degree of detail necessary for performing a required test.

6) Acceptance Criteria: The ranges within which test data are considered acceptable are established and included in the test procedure. In the event that data fall outside the acceptable range, operator action is governed by approved station procedures.

Finally, it is recognized that the IST Program for Pumps sets forth minimum testing requirements. Additional testing is performed, as required, after pump maintenance or as determined necessary by personnel at North Anna Power Station.

3.3 PROGRAM ADMINISTRATION

The engineering staff at North Anna is responsible for the administration of the IST Program for Pumps. The operations staff is responsible for performing the periodic tests as required by this program. The IST Program for Pumps is implemented by station periodic test procedures.

3.4 PUMP REFERENCE LIST

This list gives a brief description of each pump identified in the Pump IST Program.

1-CC-P-1A	Component Cooling Water Pumps
1-CC-P-1B	Drawing: 11715-CBM-79A, Sh 1 of 3

Description: These centrifugal pumps supply cooling water to transfer heat from heat exchangers containing reactor coolant or other radioactive fluids. The component cooling water pumps are constant speed pumps that operate routinely during normal operation and are defined as Group A pumps.

1-CH-P-1A	High Head Safety Injection/Charging Pumps
1-CH-P-1B	Drawing: 11715-CBM-95B, Sh 2 of 2
1-CH-P-1C	

Description: These centrifugal pumps supply high pressure borated water to the reactor coolant system following a safety injection signal, and to provide normal charging to the reactor coolant system. The high head safety injection/charging pumps are constant speed pumps that operate routinely during normal operation and are defined as Group A pumps.

1-CH-P-2A	Boric Acid Transfer Pumps
1-CH-P-2B	Drawing: 11715-CBM-95A, Sh 1 of 4

Description: These centrifugal pumps are used to supply concentrated boric acid to the blender; recirculate the contents of the boric acid storage tanks; recirculate the contents of the BIT, and for emergency boration. The boric acid transfer pumps operate at two constant speeds. The low speed is used when recirculating the contents of the boric acid storage tanks and BIT. The high speed (approximately double the low speed) is used during blended makeups and when the pumps discharge to the charging pump suction header during emergency boration events. The tests are conducted with the pumps on high speed. The pumps operate routinely during normal operation and are defined as Group A pump

1-EG-P-1HA	Emergency Diesel Generator Fuel Oil Transfer Pumps
1-EG-P-1HB	Drawing: 11715-FB-35A, Sh 2 of 2
1-EG-P-1JA	
1-EG-P-1JB	

Description: These positive displacement pumps supply fuel oil to the emergency diesel generator fuel oil day tank which directly supplies the emergency diesel generator. The emergency diesel generator fuel oil pumps are in a standby system and are defined as Group B pumps. The pumps are constant speed pumps.

1-FW-P-2	Auxiliary Feedwater Pumps
1-FW-P-3A	Drawing: 11715-CBM-74A, Sh 3 of 4
1-FW-P-3B	

Description: These centrifugal pumps supply auxiliary feedwater to the steam generators following a loss of normal feedwater flow. The auxiliary feedwater pumps are in a standby system and are defined as Group B pumps. The steam driven pump 1-FW-P-2 is a variable speed pump, and the motor driven pumps 1-FW-P-3A and 3B are constant speed pumps.

1-HV-P-20A	Control and Relay Room Chilled Water Pumps
1-HV-P-20B	Drawing: 11715-CBB-40C, Sh 1 of 3
1-HV-P-20C	

Description: These centrifugal pumps circulate chilled water for the control and relay room cooling coils. The control and relay room chilled water pumps are constant speed pumps that operate routinely during normal operation and are defined as Group A pumps.

1-HV-P-22A	Control and Relay Room Condenser Water Pumps
1-HV-P-22B	Drawing: 11715-CBB-40D, Sh 1 of 3
1-HV-P-22C	

Description: These centrifugal pumps supply service water to the control and relay room air conditioning condenser water system. The control and relay room condenser water pumps are constant speed pumps that operate routinely during normal operation and are defined as Group A pumps.

1-QS-P-1A	Quench Spray Pumps
1-QS-P-1B	Drawing: 11715-CBM-91A, Sh 2 of 4

Description: These centrifugal pumps supply a borated, chemically treated spray to cool, remove iodine from, and depressurize the containment atmosphere following a containment depressurization actuation signal. The quench spray pumps are in a standby system and are defined as Group B pumps. The pumps are constant speed pumps.

1-RH-P-1A	Residual Heat Removal Pumps
1-RH-P-1B	Drawing: 11715-CBM-94A, Sh 1 of 2

Description: These centrifugal pumps remove decay heat from the reactor core and the reactor coolant system during plant cool down. The residual heat removal pumps are constant speed pumps that operate routinely during cold shutdowns and reactor refuelings and are defined as Group A pumps.

1-RS-P-1A	Inside Recirculation Spray Pumps
1-RS-P-1B	Drawing: 11715-CBM-91A, Sh 3 of 4

Description: These vertical line shaft centrifugal pumps supply a borated spray to cool and depressurize the containment atmosphere following a containment depressurization actuation signal and maintain containment subatmospheric following an accident. The inside recirculation spray pumps are in a standby system and are defined as Group B pumps. Also, the pump sumps are maintained dry. According to ISTB-3430, they require a comprehensive test at least once every two years. No quarterly testing is required. Because the pumps are inside containment, they will receive the comprehensive test during reactor refueling outages. The pumps are constant speed pumps.

1-RS-P-2A	Outside Recirculation Spray Pumps
1-RS-P-2B	Drawing: 11715-CBM-91A, Sh 4 of 4

Description: These vertical line shaft centrifugal pumps supply borated spray to cool and depressurize the containment atmosphere following a containment depressurization actuation signal and maintain containment subatmospheric following an accident. The outside recirculation spray pumps are in a standby system and are defined as Group B pumps. Also, the pump sumps are maintained dry. According to ISTB-3430, they require a comprehensive test at least once every two years. No quarterly testing is required. The pumps are constant speed pumps.

1-RS-P-3A	Casing Cooling Pumps
1-RS-P-3B	Drawing: 11715-CBM-91B, Sh 1 of 1

Description: These centrifugal pumps supply cool borated water to the outside recirculation spray pumps to increase the net positive suction head of these pumps. The casing cooling pumps are in a standby system and are defined as Group B pumps. The pumps are constant speed pumps.

1-SI-P-1A	Low Head Safety Injection Pumps
1-SI-P-1B	Drawing: 11715-CBM-96A, Sh 1 of 3

Description: These vertical line shaft centrifugal pumps supply low pressure borated water to the reactor coolant system following a safety injection signal. The low head safety injection pumps are in a standby system and are defined as Group B pumps. The pumps are constant speed pumps.

1-SW-P-1A	Service Water Pumps
1-SW-P-1B	Drawing: 11715-CBM-78A, Sh 3 of 5

Description: These vertical line shaft centrifugal pumps supply cooling water to the component cooling and recirculation spray heat exchangers as well as other safety related components. The service water pumps are constant speed pumps that operate routinely during normal operation and are defined as Group A pumps.

3.5 PUMP INSERVICE TEST TABLE

The Pump Inservice Test Table identifies the pumps to be tested, code classes, required test quantities and frequencies. Relief from test requirements is requested in cases where test requirements are determined to be impractical. Where relief is requested, technical justification is provided along with alternative test methods when applicable. Relief requests are contained in Section 3.6.

For non-Code pumps, a request for relief is not necessary when provisions of the Code are determined to be impractical. Section 3.7 contains a discussion of the testing requirements for non-Code pumps and descriptions of alternative testing in cases where the provisions of the Code are not met.

To aid the reader in interpreting the Pump Inservice Test Table, brief explanations of the table headings and abbreviations are provided below.

1) Pump Number - Each pump in the plant has a unique "mark" number which identifies the system to which the pump belongs.

2) Drawing and Sheet Number, Coordinate - The specific coordinates of each valve are supplied to facilitate location of the valves on the flow diagrams provided.

3) ASME Class - ASME Code Class of each pump as per 10CFR50.55a and Regulatory Guide 1.26, Revision 3.

Note: NC is for non-Code pumps. These pumps are important to safety but are not in systems that are classified ASME Class 1, 2 or 3.

4) ISTB Group - Pump group as defined in ISTB-2000 where:

Group A pumps - pumps that are operated continuously or routinely during normal operation, cold shutdown, or refueling operations and

Group B pumps - pumps in standby systems that are not operated routinely except for testing.

5) Flow Path - The flow path used for the test can either be the normal flow path for the system (either the normal operation flow path and/or the normal accident flow path), a recirculation flow path or a flow path dedicated to testing (test loop).

6) System Resist - Either FIXED for a test loop with a fixed system resistance or VARIABLE for a test loop with a system resistance that can be varied.

7) Test Type - The required ISTB test quantities. Test types with "C_" as a prefix represent comprehensive tests that are conducted every 24 months. Test types without the prefix "C_" represent either Group A or B tests that are conducted every three months unless the test frequency has been deferred to cold shutdown or reactor refueling by a relief request. Examples of test type abbreviations are given below.

DEV_HEAD - developed pump head

DIFF_PRESSURE - differential pressure

DISCH_PRESSURE - discharge pressure

FLOW - flow

FLOW_TOTAL - flow total is the sum of branch flows

PUMP_SPEED - pump speed for variable speed pumps

VIB_(suffix) - vibration measured at a given bearing (e.g., IN for inboard bearing) and in a given orientation (e.g., HORZ for the horizontal direction)

8) Test Freq - The test frequency with the following abbreviations:

03 - the test will be performed every three months (Group A and B pump tests shall be performed every three months as required by Table ISTB-3400-1.)

CS - the test will be performed every cold shutdown (a relief request explains the need for deviating from ISTB Table ISTB-3400-1 test frequency requirements)

RR - the test will be performed every reactor refueling (a relief request explains the need for deviating from ISTB Table ISTB-3400-1 test frequency requirements)

24 - the test will be performed every 24 months (pumps with sumps that are maintained dry shall only have a comprehensive test performed every 2 years per ISTB-3430).

9) Ref Flow Status – ISTB-3300 requires that the reference flow rate be within 20% of pump design flow if practicable. The reference flow rate is the flow rate used to establish acceptance criteria. FULL (full flow) in this column indicates that the reference flow rate is within 20% of pump design flow. If the reference flow rate does not meet this requirement a note is provided at the end of the pump table explaining the impracticality.

For Group A and B tests, ISTB-3300(e)(2) allows for testing outside the 20% range due to impracticality. For comprehensive tests, ISTB-3300(e)(1) requires that the tests to be performed within the 20% range with no exceptions. Therefore, relief from Code provisions is required when testing outside the 20% range for comprehensive tests.

10) Relief Request - Relief requests are presented in Section 3.6.

11) Non-Code Alter Test - Non-Code alternative tests apply to pumps that are not ASME Code Class 1, 2 or 3. These tests are alternatives to Code tests and are described in Section 3.7.

NORTH ANNA UNIT 1
FOURTH INSERVICE TESTING INTERVAL
PUMP INSERVICE TEST TABLE

PUMP NUMBER	DRAWING NUMBER	SHEET NO	COOR	ASME CLASS	ISTB GROUP	FLOW PATH	SYSTEM RESIST	TEST TYPE	TEST FREQ	REF FLOW STATUS	RELIEF REQUEST (P-)	NON-CODE ALTER (PNC-)
1-CC-P-1A	11715-CBM-079A	1 OF 3	C5	3	A	NORMAL	VARIABLE	C_DIFF_PRESS	24			
								C_FLOW_TOTAL	24	FULL	4	
								C_VIB_IN_HORZ	24			
								C_VIB_IN_VERT	24			
								C_VIB_OUT_AX	24			
								C_VIB_OUT_HORZ	24			
								C_VIB_OUT_VERT	24			
								DIFF_PRESSURE	03			
								FLOW_TOTAL	03	FULL	4	
								VIB_IN_HORZ	03		1	
								VIB_IN_VERT	03		1	
								VIB_OUT_AX	03		1	
								VIB_OUT_HORZ	03		1	
								VIB_OUT_VERT	03		1	
	COMPONENT COOLING WATER CENTRIFUGAL PUMP											
1-CC-P-1B	11715-CBM-079A	1 OF 3	B5	3	A	NORMAL	VARIABLE	C_DIFF_PRESS	24			
								C_FLOW_TOTAL	24	FULL	4	
								C_VIB_IN_HORZ	24		1	
								C_VIB_IN_VERT	24		1	
								C_VIB_OUT_AX	24		1	
								C_VIB_OUT_HORZ	24		1	
								C_VIB_OUT_VERT	24		1	
								DIFF_PRESSURE	03			
								FLOW_TOTAL	03	FULL	4	
								VIB_IN_HORZ	03		1	
								VIB_IN_VERT	03		1	
								VIB_OUT_AX	03		1	
								VIB_OUT_HORZ	03		1	
								VIB_OUT_VERT	03		1	
	COMPONENT COOLING WATER CENTRIFUGAL PUMP											
1-CH-P-1A	11715-CBM-095B	2 OF 2	C7	2	A	NORMAL	FIXED	C_DIFF_PRESS	24			
						ACCIDENT		C_FLOW_TOTAL	24	FULL		

NORTH ANNA UNIT 1
FOURTH INSERVICE TESTING INTERVAL
PUMP INSERVICE TEST TABLE

PUMP NUMBER	DRAWING NUMBER	SHEET NO	COOR	ASME CLASS	ISTB GROUP	FLOW PATH	SYSTEM RESIST	TEST TYPE	TEST FREQ	REF FLOW STATUS	*RELIEF* REQUEST (P-)	*NON-CODE* ALTER (PNC-)
1-CH-P-1A	11715-CBM-095B	2 OF 2	C7	2	A	NORMAL ACCIDENT	FIXED	C_VIB_IN_HORZ	24			
								C_VIB_IN_VERT	24			
								C_VIB_OUT_HORZ	24			
								C_VIB_OUT_VERT	24			
								C_VIB_THST_AX	24		1	
								C_VIB_THST_HORZ	24			
								C_VIB_THST_VERT	24			
						NORMAL CHARGING	VARIABLE	DIFF_PRESSURE	03			
								FLOW_TOTAL	03	NOTE 1	8	
								VIB_IN_HORZ	03			
								VIB_IN_VERT	03			
								VIB_OUT_HORZ	03			
								VIB_OUT_VERT	03			
								VIB_THRUST_AX	03		1	
								VIB_THRUST_HORZ	03			
								VIB_THRUST_VERT	03			
	HIGH HEAD SAFETY INJECTION/CHARGING CENTRIFUGAL PUMP											
1-CH-P-1B	11715-CBM-095B	2 OF 2	C6	2	A	NORMAL ACCIDENT	FIXED	C_DIFF_PRESS	24			
								C_FLOW_TOTAL	24	FULL		
								C_VIB_IN_HORZ	24			
								C_VIB_IN_VERT	24			
								C_VIB_OUT_HORZ	24			
								C_VIB_OUT_VERT	24			
								C_VIB_THST_AX	24			
								C_VIB_THST_HORZ	24			
								C_VIB_THST_VERT	24			
						NORMAL CHARGING	VARIABLE	DIFF_PRESSURE	03			
								FLOW_TOTAL	03	NOTE 1	8	
								VIB_IN_HORZ	03			
								VIB_IN_VERT	03			
								VIB_OUT_HORZ	03			

NORTH ANNA UNIT 1
FOURTH INSERVICE TESTING INTERVAL
PUMP INSERVICE TEST TABLE

PUMP NUMBER	DRAWING NUMBER	SHEET NO	COOR	ASME CLASS	ISTB GROUP	FLOW PATH	SYSTEM RESIST	TEST TYPE	TEST FREQ	REF FLOW STATUS	RELIEF REQUEST (P-)	NON-CODE ALTER (PNC-)
1-CH-P-1B	11715-CBM-095B	2 OF 2	C6	2	A	NORMAL CHARGING	VARIABLE	VIB_OUT_VERT	03			
								VIB_THRUST_AX	03			
								VIB_THRUST_HORZ	03			
								VIB_THRUST_VERT	03			
	HIGH HEAD SAFETY INJECTION/CHARGING CENTRIFUGAL PUMP											
1-CH-P-1C	11715-CBM-095B	2 OF 2	C4	2	A	NORMAL ACCIDENT	FIXED	C_DIFF_PRESS	24			
								C_FLOW_TOTAL	24	FULL		
								C_VIB_IN_HORZ	24			
								C_VIB_IN_VERT	24			
								C_VIB_OUT_HORZ	24			
								C_VIB_OUT_VERT	24		1	
								C_VIB_THST_AX	24		1	
								C_VIB_THST_HORZ	24			
								C_VIB_THST_VERT	24			
						NORMAL CHARGING	VARIABLE	DIFF_PRESSURE	03			
								FLOW_TOTAL	03	NOTE 1	8	
								VIB_IN_HORZ	03			
								VIB_IN_VERT	03			
								VIB_OUT_HORZ	03		1	
								VIB_OUT_VERT	03		1	
								VIB_THRUST_AX	03		1	
								VIB_THRUST_HORZ	03			
								VIB_THRUST_VERT	03			
	HIGH HEAD SAFETY INJECTION/CHARGING CENTRIFUGAL PUMP											
1-CH-P-2A	11715-CBM-095A	1 OF 4	B4	3	A	NORMAL	VARIABLE	C_DIFF_PRESS	24			
								C_FLOW	24	FULL		
								C_VIB_IN_HORZ	24		1	
								C_VIB_IN_VERT	24		1	
								C_VIB_OUT_AX	24		1	
								C_VIB_OUT_HORZ	24		1	

NORTH ANNA UNIT 1
FOURTH INSERVICE TESTING INTERVAL
PUMP INSERVICE TEST TABLE

PUMP NUMBER	DRAWING NUMBER	SHEET NO	COOR	ASME CLASS	ISTB GROUP	FLOW PATH	SYSTEM RESIST	TEST TYPE	TEST FREQ	REF FLOW STATUS	RELIEF REQUEST (P-)	NON-CODE ALTER (PNC-)
1-CH-P-2A	11715-CBM-095A	1 OF 4	B4	3	A	NORMAL	VARIABLE	C_VIB_OUT_VERT	24		1	
						RECIRC	FIXED	DIFF_PRESSURE	03		5	
								FLOW	NA	NOTE 2	5	
								VIB_IN_HORZ	03		1	
								VIB_IN_VERT	03		1	
								VIB_OUT_AX	03		1	
								VIB_OUT_HORZ	03		1	
								VIB_OUT_VERT	03		1	
	BORIC ACID TRANSFER CENTRIFUGAL PUMP											
1-CH-P-2B	11715-CBM-095A	1 OF 4	B5	3	A	NORMAL	VARIABLE	C_DIFF_PRESS	24			
								C_FLOW	24	FULL		
								C_VIB_IN_HORZ	24			
								C_VIB_IN_VERT	24			
								C_VIB_OUT_AX	24		1	
								C_VIB_OUT_HORZ	24			
								C_VIB_OUT_VERT	24		1	
						RECIRC	FIXED	DIFF_PRESSURE	03		5	
								FLOW	NA	NOTE 2	5	
								VIB_IN_HORZ	03			
								VIB_IN_VERT	03		1	
								VIB_OUT_AX	03			
								VIB_OUT_HORZ	03		1	
								VIB_OUT_VERT	03		1	
	BORIC ACID TRANSFER CENTRIFUGAL PUMP											
1-EG-P-1HA	11715-FB-035A	2 OF 2	B8	NC	B	NORMAL	VARIABLE	C_DISCH_PRESS	24			1
								C_FLOW	24	FULL		1
								C_VIB_IN_HORZ	24			1
								C_VIB_IN_VERT	24			1
								C_VIB_OUT_AX	24			1
								C_VIB_OUT_HORZ	24			1
								C_VIB_OUT_VERT	24			1
								DISCH_PRESSURE	03			1

NORTH ANNA UNIT 1
FOURTH INSERVICE TESTING INTERVAL
PUMP INSERVICE TEST TABLE

PUMP NUMBER	DRAWING NUMBER	SHEET NO	COOR	ASME CLASS	ISTB GROUP	FLOW PATH	SYSTEM RESIST	TEST TYPE	TEST FREQ	REF FLOW STATUS	RELIEF REQUEST (P-)	NON-CODE ALTER (PNC-)
1-EG-P-1HA	11715-FB-035A	2 OF 2	B8	NC	B	NORMAL	VARIABLE	FLOW	03	FULL		1
	EMERGENCY DIESEL GENERATOR FUEL OIL TRANSFER POSITIVE DISPLACEMENT PUMP											
1-EG-P-1HB	11715-FB-035A	2 OF 2	B6	NC	B	NORMAL	VARIABLE	C_DISCH_PRESS	24			1
								C_FLOW	24	FULL		1
								C_VIB_IN_HORZ	24			1
								C_VIB_IN_VERT	24			1
								C_VIB_OUT_AX	24			1
								C_VIB_OUT_HORZ	24			1
								C_VIB_OUT_VERT	24			1
								DISCH_PRESSURE	03			1
								FLOW	03	FULL		1
	EMERGENCY DIESEL GENERATOR FUEL OIL TRANSFER POSITIVE DISPLACEMENT PUMP											
1-EG-P-1JA	11715-FB-035A	2 OF 2	D8	NC	B	NORMAL	VARIABLE	C_DISCH_PRESS	24			1
								C_FLOW	24	FULL		1
								C_VIB_IN_HORZ	24			1
								C_VIB_IN_VERT	24			1
								C_VIB_OUT_AX	24			1
								C_VIB_OUT_HORZ	24			1
								C_VIB_OUT_VERT	24			1
								DISCH_PRESSURE	03			1
								FLOW	03	FULL		1
	EMERGENCY DIESEL GENERATOR FUEL OIL TRANSFER POSITIVE DISPLACEMENT PUMP											
1-EG-P-1JB	11715-FB-035A	2 OF 2	D6	NC	B	NORMAL	VARIABLE	C_DISCH_PRESS	24			1
								C_FLOW	24	FULL		1
								C_VIB_IN_HORZ	24			1
								C_VIB_IN_VERT	24			1
								C_VIB_OUT_AX	24			1
								C_VIB_OUT_HORZ	24			1
								C_VIB_OUT_VERT	24			1

NORTH ANNA UNIT 1
FOURTH INSERVICE TESTING INTERVAL
PUMP INSERVICE TEST TABLE

PUMP NUMBER	DRAWING NUMBER	SHEET NO	COOR	ASME CLASS	ISTB GROUP	FLOW PATH	SYSTEM RESIST	TEST TYPE	TEST FREQ	REF FLOW STATUS	RELIEF REQUEST (P-)	NON-CODE ALTER (PNC-)
1-EG-P-1JB	11715-FB-035A	2 OF 2	D6	NC	B	NORMAL	VARIABLE	DISCH_PRESSURE	03			1
								FLOW	03	FULL		1
	EMERGENCY DIESEL GENERATOR FUEL OIL TRANSFER POSITIVE DISPLACEMENT PUMP											
1-FW-P-2	11715-CBM-074A	3 OF 4	B8	3	B	TEST LOOP	VARIABLE	C_DIFF_PRESS	24			
								C_FLOW_TOTAL	24	FULL		
								C_PUMP_SPEED	24			
								C_VIB_IN_HORZ	24			
								C_VIB_IN_VERT	24			
								C_VIB_OUT_AX	24			
								C_VIB_OUT_HORZ	24			
								C_VIB_OUT_VERT	24			
								DIFF_PRESSURE	03			
								FLOW_TOTAL	03	FULL		
								PUMP_SPEED	03			
	AUXILIARY FEEDWATER STEAM DRIVEN CENTRIFUGAL PUMP											
1-FW-P-3A	11715-CBM-074A	3 OF 4	B6	3	B	TEST LOOP	VARIABLE	C_DIFF_PRESS	24			
								C_FLOW_TOTAL	24	FULL		
								C_VIB_IN_HORZ	24			
								C_VIB_IN_VERT	24			
								C_VIB_OUT_AX	24			
								C_VIB_OUT_HORZ	24			
								C_VIB_OUT_VERT	24		1	
								DIFF_PRESSURE	03			
								FLOW_TOTAL	03	FULL		
	AUXILIARY FEEDWATER MOTOR DRIVEN CENTRIFUGAL PUMP											
1-FW-P-3B	11715-CBM-074A	3 OF 4	B5	3	B	TEST LOOP	VARIABLE	C_DIFF_PRESS	24			
								C_FLOW_TOTAL	24	FULL		
								C_VIB_IN_HORZ	24			
								C_VIB_IN_VERT	24			

NORTH ANNA UNIT 1
FOURTH INSERVICE TESTING INTERVAL
PUMP INSERVICE TEST TABLE

PUMP NUMBER	DRAWING NUMBER	SHEET NO	COOR	ASME CLASS	ISTB GROUP	FLOW PATH	SYSTEM RESIST	TEST TYPE	TEST FREQ	REF FLOW STATUS	RELIEF REQUEST (P-)	NON-CODE ALTER (PNC-)
1-FW-P-3B	11715-CBM-074A	3 OF 4	B5	3	B	TEST LOOP	VARIABLE	C_VIB_OUT_AX	24			
								C_VIB_OUT_HORZ	24			
								C_VIB_OUT_VERT	24		1	
								DIFF_PRESSURE	03			
								FLOW_TOTAL	03	FULL		
	AUXILIARY FEEDWATER MOTOR DRIVEN CENTRIFUGAL PUMP											
1-HV-P-20A	11715-CBB -040C	1 OF 3	E6	3	A	NORMAL	VARIABLE	C_DIFF_PRESS	24			
								C_FLOW_TOTAL	24	FULL		
								C_VIB_UP_MTR_90	24			
								C_VIB_UP_MTR_AX	24		1	
								C_VIB_UP_MTR_IN	24			
								DIFF_PRESSURE	03			
								FLOW_TOTAL	03	FULL		
								VIB_UP_MTR_90	03			
								VIB_UP_MTR_AX	03		1	
								VIB_UP_MTR_IN	03			
	MAIN CONTROL ROOM AIR CONDITIONING SYSTEM CHILLER SIDE CENTRIFUGAL PUMP											
1-HV-P-20B	11715-CBB -040C	1 OF 3	C6	3	A	NORMAL	VARIABLE	C_DIFF_PRESS	24			
								C_FLOW_TOTAL	24	FULL		
								C_VIB_UP_MTR_90	24			
								C_VIB_UP_MTR_AX	24			
								C_VIB_UP_MTR_IN	24			
								DIFF_PRESSURE	03			
								FLOW_TOTAL	03	FULL		
								VIB_UP_MTR_90	03			
								VIB_UP_MTR_AX	03		1	
								VIB_UP_MTR_IN	03			
	MAIN CONTROL ROOM AIR CONDITIONING SYSTEM CHILLER SIDE CENTRIFUGAL PUMP											
1-HV-P-20C	11715-CBB -040C	1 OF 3	D6	3	A	NORMAL	VARIABLE	C_DIFF_PRESS	24			

NORTH ANNA UNIT 1
FOURTH INSERVICE TESTING INTERVAL
PUMP INSERVICE TEST TABLE

PUMP NUMBER	DRAWING NUMBER	SHEET NO	COOR	ASME CLASS	ISTB GROUP	FLOW PATH	SYSTEM RESIST	TEST TYPE	TEST FREQ	REF FLOW STATUS	RELIEF REQUEST (P-)	NON-CODE ALTER (PNC-)
1-HV-P-20C	11715-CBB -040C	1 OF 3	D6	3	A	NORMAL	VARIABLE	C_FLOW_TOTAL	24	FULL		
								C_VIB_UP_MTR_90	24			
								C_VIB_UP_MTR_AX	24			
								C_VIB_UP_MTR_IN	24			
								DIFF_PRESSURE	03			
								FLOW_TOTAL	03	FULL		
								VIB_UP_MTR_90	03			
								VIB_UP_MTR_AX	03			
								VIB_UP_MTR_IN	03			
	MAIN CONTROL ROOM AIR CONDITIONING SYSTEM CHILLER SIDE CENTRIFUGAL PUMP											
1-HV-P-22A	11715-CBB-040D	1 OF 3	E6	3	A	NORMAL	VARIABLE	C_DIFF_PRESS	24			
								C_FLOW	24	FULL		
								C_VIB_UP_MTR_90	24			
								C_VIB_UP_MTR_AX	24		1	
								C_VIB_UP_MTR_IN	24			
								DIFF_PRESSURE	03			
								FLOW	03	FULL		
								VIB_UP_MTR_90	03			
								VIB_UP_MTR_AX	03		1	
								VIB_UP_MTR_IN	03			
	MAIN CONTROL ROOM AIR CONDITIONING SYSTEM CONDENSER SIDE CENTRIFUGAL PUMP											
1-HV-P-22B	11715-CBB-040D	1 OF 3	B6	3	A	NORMAL	VARIABLE	C_DIFF_PRESS	24			
								C_FLOW	24	FULL		
								C_VIB_UP_MTR_90	24			
								C_VIB_UP_MTR_AX	24			
								C_VIB_UP_MTR_IN	24			
								DIFF_PRESSURE	03			
								FLOW	03	FULL		
								VIB_UP_MTR_90	03			
								VIB_UP_MTR_AX	03		1	
								VIB_UP_MTR_IN	03			

NORTH ANNA UNIT 1
FOURTH INSERVICE TESTING INTERVAL
PUMP INSERVICE TEST TABLE

PUMP NUMBER	DRAWING NUMBER	SHEET NO	COOR	ASME CLASS	ISTB GROUP	FLOW PATH	SYSTEM RESIST	TEST TYPE	TEST FREQ	REF FLOW STATUS	RELIEF REQUEST (P-)	NON-CODE ALTER (PNC-)
	MAIN CONTROL ROOM AIR CONDITIONING SYSTEM CONDENSER SIDE CENTRIFUGAL PUMP											
1-HV-P-22C	11715-CBB-040D	1 OF 3	D6	3	A	NORMAL	VARIABLE	C_DIFF_PRESS	24			
								C_FLOW	24	FULL		
								C_VIB_UP_MTR_90	24			
								C_VIB_UP_MTR_AX	24			
								C_VIB_UP_MTR_IN	24			
								DIFF_PRESSURE	03			
								FLOW	03	FULL		
								VIB_UP_MTR_90	03			
								VIB_UP_MTR_AX	03		1	
								VIB_UP_MTR_IN	03		1	
	MAIN CONTROL ROOM AIR CONDITIONING SYSTEM CONDENSER SIDE CENTRIFUGAL PUMP											
1-QS-P-1A	11715-CBM-091A	2 OF 4	B5	2	B	RECIRC	FIXED	C_DIFF_PRESS	24			
								C_FLOW_TOTAL	24	FULL		
								C_VIB_IN_HORZ	24			
								C_VIB_IN_VERT	24			
								C_VIB_OUT_AX	24			
								C_VIB_OUT_HORZ	24			
								C_VIB_OUT_VERT	24			
								DIFF_PRESSURE	03			
								FLOW_TOTAL	03	FULL		
	CONTAINMENT SPRAY CENTRIFUGAL PUMP											
1-QS-P-1B	11715-CBM-091A	2 OF 4	B4	2	B	RECIRC	FIXED	C_DIFF_PRESS	24			
								C_FLOW_TOTAL	24	FULL		
								C_VIB_IN_HORZ	24			
								C_VIB_IN_VERT	24			
								C_VIB_OUT_AX	24			
								C_VIB_OUT_HORZ	24			
								C_VIB_OUT_VERT	24			

NORTH ANNA UNIT 1
FOURTH INSERVICE TESTING INTERVAL
PUMP INSERVICE TEST TABLE

PUMP NUMBER	DRAWING NUMBER	SHEET NO	COOR	ASME CLASS	ISTB GROUP	FLOW PATH	SYSTEM RESIST	TEST TYPE	TEST FREQ	REF FLOW STATUS	RELIEF REQUEST (P-)	NON-CODE ALTER (PNC-)
1-QS-P-1B	11715-CBM-091A	2 OF 4	B4	2	B	RECIRC	FIXED	DIFF_PRESSURE	03			
								FLOW_TOTAL	03	FULL		
	CONTAINMENT SPRAY CENTRIFUGAL PUMP											
1-RH-P-1A	11715-CBM-094A	1 OF 2	D7	2	A	NORMAL	VARIABLE	C_DIFF_PRESS	24			
								C_FLOW	24	FULL	2	
								C_VIB_UP_MTR_90	24			
								C_VIB_UP_MTR_AX	24		1	
								C_VIB_UP_MTR_IN	24			
								DIFF_PRESSURE	CS		2	
								FLOW	CS	FULL	2	
								VIB_UP_MTR_90	CS		2	
								VIB_UP_MTR_AX	CS		1, 2	
								VIB_UP_MTR_IN	CS		2	
	RESIDUAL HEAT REMOVAL CENTRIFUGAL PUMP											
1-RH-P-1B	11715-CBM-094A	1 OF 2	D4	2	A	NORMAL	VARIABLE	C_DIFF_PRESS	24			
								C_FLOW	24	FULL	2	
								C_VIB_UP_MTR_90	24			
								C_VIB_UP_MTR_AX	24		1	
								C_VIB_UP_MTR_IN	24			
								DIFF_PRESSURE	CS		2	
								FLOW	CS	FULL	2	
								VIB_UP_MTR_90	CS		2	
								VIB_UP_MTR_AX	CS		1, 2	
								VIB_UP_MTR_IN	CS		2	
	RESIDUAL HEAT REMOVAL CENTRIFUGAL PUMP											
1-RS-P-1A	11715-CBM-091A	3 OF 4	B7	2	B	TEST LOOP	VARIABLE	C_DIFF_PRESS	24			
								C_FLOW	24	FULL		
								C_VIB_UP_MTR_90	24			
								C_VIB_UP_MTR_AX	24			

NORTH ANNA UNIT 1
FOURTH INSERVICE TESTING INTERVAL
PUMP INSERVICE TEST TABLE

PUMP NUMBER	DRAWING NUMBER	SHEET NO	COOR	ASME CLASS	ISTB GROUP	FLOW PATH	SYSTEM RESIST	TEST TYPE	TEST FREQ	REF FLOW STATUS	RELIEF REQUEST (P-)	NON-CODE ALTER (PNC-)
1-RS-P-1A	11715-CBM-091A	3 OF 4	B7	2	B	TEST LOOP	VARIABLE	C_VIB_UP_MTR_IN	24			
	INSIDE RECIRCULATION SPRAY VERTICAL LINE SHAFT PUMP											
1-RS-P-1B	11715-CBM-091A	3 OF 4	B4	2	B	TEST LOOP	VARIABLE	C_DIFF_PRESS	24			
								C_FLOW	24	FULL		
								C_VIB_UP_MTR_90	24			
								C_VIB_UP_MTR_AX	24			
								C_VIB_UP_MTR_IN	24			
	INSIDE RECIRCULATION SPRAY VERTICAL LINE SHAFT PUMP											
1-RS-P-2A	11715-CBM-091A	4 OF 4	B4	2	B	TEST LOOP	VARIABLE	C_DIFF_PRESS	24			
								C_FLOW	24	NOTE 3	6	
								C_VIB_UP_MTR_90	24			
								C_VIB_UP_MTR_AX	24			
								C_VIB_UP_MTR_IN	24			
	OUTSIDE RECIRCULATION SPRAY VERTICAL LINE SHAFT PUMP											
1-RS-P-2B	11715-CBM-091A	4 OF 4	B3	2	B	TEST LOOP	VARIABLE	C_DIFF_PRESS	24			
								C_FLOW	24	NOTE 3	6	
								C_VIB_UP_MTR_90	24			
								C_VIB_UP_MTR_AX	24			
								C_VIB_UP_MTR_IN	24			
	OUTSIDE RECIRCULATION SPRAY VERTICAL LINE SHAFT PUMP											
1-RS-P-3A	11715-CBM-091B	1 OF 1	B7	3	B	RECIRC	VARIABLE	C_DIFF_PRESS	24			
								C_FLOW	24	FULL		
								C_VIB_IN_HORZ	24			
								C_VIB_IN_VERT	24			
								C_VIB_OUT_AX	24			
								C_VIB_OUT_HORZ	24			
								C_VIB_OUT_VERT	24		1	

NORTH ANNA UNIT 1
FOURTH INSERVICE TESTING INTERVAL
PUMP INSERVICE TEST TABLE

PUMP NUMBER	DRAWING NUMBER	SHEET NO	COOR	ASME CLASS	ISTB GROUP	FLOW PATH	SYSTEM RESIST	TEST TYPE	TEST FREQ	REF FLOW STATUS	RELIEF REQUEST (P-)	NON-CODE ALTER (PNC-)
1-RS-P-3A	11715-CBM-091B	1 OF 1	B7	3	B	RECIRC	VARIABLE	DIFF_PRESSURE	03			
								FLOW	03	FULL		
	CASING COOLING CENTRIFUGAL PUMP											
1-RS-P-3B	11715-CBM-091B	1 OF 1	B6	3	B	RECIRC	VARIABLE	C_DIFF_PRESS	24			
								C_FLOW	24	FULL		
								C_VIB_IN_HORZ	24			
								C_VIB_IN_VERT	24			
								C_VIB_OUT_AX	24			
								C_VIB_OUT_HORZ	24			
								C_VIB_OUT_VERT	24			
								DIFF_PRESSURE	03			
								FLOW	03	FULL		
	CASING COOLING CENTRIFUGAL PUMP											
1-SI-P-1A	11715-CBM-096A	1 OF 3	C6	2	B	NORMAL	VARIABLE	C_DEV_HEAD	24			
								C_FLOW	24	FULL		
								C_VIB_UP_MTR_90	24			
								C_VIB_UP_MTR_AX	24			
								C_VIB_UP_MTR_IN	24			
						RECIRC	FIXED	DEV_HEAD	03			
								FLOW	03	NOTE 4		
	LOW HEAD SAFETY INJECTION VERTICAL LINE SHAFT PUMP											
1-SI-P-1B	11715-CBM-096A	1 OF 3	C4	2	B	NORMAL	VARIABLE	C_DEV_HEAD	24			
								C_FLOW	24	FULL		
								C_VIB_UP_MTR_90	24			
								C_VIB_UP_MTR_AX	24			
								C_VIB_UP_MTR_IN	24			
						RECIRC	FIXED	DEV_HEAD	03			
								FLOW	03	NOTE 4		
	LOW HEAD SAFETY INJECTION VERTICAL LINE SHAFT PUMP											

NORTH ANNA UNIT 1
FOURTH INSERVICE TESTING INTERVAL
PUMP INSERVICE TEST TABLE

PUMP NUMBER	DRAWING NUMBER	SHEET NO	COOR	ASME CLASS	ISTB GROUP	FLOW PATH	SYSTEM RESIST	TEST TYPE	TEST FREQ	REF FLOW STATUS	RELIEF REQUEST (P-)	NON-CODE ALTER (PNC-)
1-SW-P-1A	11715-CBM-078A	3 OF 5	D7	3	A	NORMAL	VARIABLE	C_DEV_HEAD	24			
								C_FLOW	24	FULL	3	
								C_VIB_UP_MTR_90	24			
								C_VIB_UP_MTR_AX	24		1	
								C_VIB_UP_MTR_IN	24			
								DEV_HEAD	03			
								FLOW	03	NOTE 5	3	
								VIB_UP_MTR_90	03			
								VIB_UP_MTR_AX	03		1	
								VIB_UP_MTR_IN	03			
	SERVICE WATER VERTICAL LINE SHAFT PUMP											
1-SW-P-1B	11715-CBM-078A	3 OF 5	D6	3	A	NORMAL	VARIABLE	C_DEV_HEAD	24			
								C_FLOW	24	FULL	3	
								C_VIB_UP_MTR_90	24			
								C_VIB_UP_MTR_AX	24			
								C_VIB_UP_MTR_IN	24			
								DEV_HEAD	03			
								FLOW	03	NOTE 5	3	
								VIB_UP_MTR_90	03			
								VIB_UP_MTR_AX	03		1	
								VIB_UP_MTR_IN	03			
	SERVICE WATER VERTICAL LINE SHAFT PUMP											

PUMP INSERVICE TEST TABLE NOTES

Note 1 - The normal charging flow path is the only flow path available for Group A tests that are performed every three months for pumps 1-CH-P-1A, B and C. Flow within 20% of pump design flow cannot be achieved with this flow path.

Note 2 - As described in Relief Request P-5, permanent flow instrumentation is not installed on the boric acid transfer system recirculation piping, which is the only test loop available to test pumps 1-CH-P-2A and B every three months. The alternative testing described in Relief Request P-5 will be followed.

Note 3 - As described in Relief Request P-6, a flow within 20% of pump design flow cannot be achieved with the only available test loop for outside recirculation spray pumps 1-RS-P-2A and B.

Note 4 - The low head safety injection recirculation flow path is the only flow path available for Group B tests that are performed every three months for pumps 1-SI-P-1A and B. Flow within 20% of pump design flow cannot be achieved with this flow path.

Note 5 - As described in Relief Request P-3, pumps 1-SW-P-1A and B are tested over a range of flows every three months. The lower end of this range is less than 20% of pump design flow. However, to minimize system perturbations, the range will not be changed to accommodate the 20% of design flow.

3.6 PUMP TEST PROGRAM RELIEF REQUESTS

Relief requests identify those ISTB Code requirements considered to be impractical or for which an alternative testing method is proposed. The basis for the relief request and the alternate testing to be performed is given.

RELIEF REQUEST P-1

Proposed alternative in accordance with 10CFR50.55a(a)(3)(i)
Alternative provides acceptable level of quality and safety.

1.0 ASME Code Components Affected

Refer to Table P-1

2.0 Applicable Code Edition and Addenda

ASME OM Code, 2004 Edition

3.0 Applicable Code Requirements

ISTB-3300, "Reference Values"

ISTB-3300(a) requires that initial reference values shall be determined from the results of testing meeting the requirements of ISTB-3100, "Preservice Testing," or from the results of the first inservice test.

ISTB-3300(d) requires that reference values shall be established at a point(s) of operation (reference point) readily duplicated during subsequent tests.

ISTB-3300(f) requires that all subsequent test results shall be compared to these initial reference values or to new reference values established in accordance with ISTB-3310, ISTB-3320, or ISTB-6200(c).

ISTB-5120, "Inservice Testing" (Centrifugal Pumps, Except Vertical Line Shaft Centrifugal Pumps)

ISTB-5121(e) and ISTB-5123(e), "Group A Test Procedure and Comprehensive Test Procedure", require that all deviations from the reference values shall be compared with the ranges of Table ISTB-5121-1 and corrective action taken as specified in ISTB-6200. Vibration measurements shall be compared to both the relative and absolute criteria shown in the alert and required action ranges of Table ISTB-5121-1. For example, if vibration exceeds either 6Vr, or 0.7 in/sec, the pump is in the required action range.

ISTB-5220, "Inservice Testing" (Vertical Line Shaft Centrifugal Pumps)

ISTB-5221(e) and ISTB-5223(e), "Group A Test Procedure and Comprehensive Test Procedure", require that all deviations from the reference values shall be compared with the ranges of Table ISTB-5221-1 and corrective action taken as specified in ISTB-6200. Vibration measurements shall be compared to both the relative and absolute criteria shown in the alert and required action ranges of Table ISTB-5221-1.

Note: There are no ASME Code Classed positive displacement pumps in the North Anna IST Program.

4.0 Reason for Request

The pump groups listed in Table P-1 tend to be smooth running pumps. There is at least one pump in each group with at least one vibration reference value (V_r) that is currently less than 0.05 inches per second (ips). Small values for V_r produce small acceptable ranges for pump operation. The acceptable ranges are defined in Tables ISTB-5121-1 and ISTB-5221-1 as less than or equal to $2.5V_r$. Based on a small acceptable range, a smooth running pump could be subject to unnecessary corrective action if the measured vibration parameter exceeds this acceptable range.

For very small reference values, hydraulic noise and instrument error can be a significant portion of the reading and affect the repeatability of subsequent measurements. Also, experience gathered from the North Anna preventive maintenance program has shown that changes in vibration levels in the range of 0.05 ips do not normally indicate significant degradation in pump performance.

To avoid unnecessary corrective action, a minimum value for V_r of 0.05 ips has been established for velocity measurements. This minimum value will be applied to individual vibration locations for the pumps listed in Table P-1 where the measured reference value is less than 0.05 ips.

When new reference values are established per ISTB-3310, ISTB-3320 or ISTB-6200(c), the measured parameters will be evaluated for each location to determine if the provisions of this relief request still apply.

In addition to the requirements of ISTB, the pumps in the ASME Inservice Testing Program are included in the North Anna Predictive Maintenance Program. The North Anna Predictive Maintenance Program currently employs predictive monitoring techniques such as:

- vibration monitoring and analysis beyond that required by ISTB,
- oil sampling and analysis where applicable (e.g., for pumps with sufficiently large oil reservoirs).

If the measured parameters are outside the normal operating range or are determined by analysis to be trending toward an unacceptable degraded state, appropriate actions are taken that may include:

- increased monitoring to establish rate of change,
- review of component specific information to identify cause, and
- removal of the pump from service to perform maintenance.

It should be noted that all of the pumps in the IST Program will remain in the Predictive Maintenance Program even if certain pumps have very low vibration readings and are considered to be smooth running pumps. This alternative to the requirements of ISTB-3300, ISTB-5120 and ISTB-5220, and Table ISTB-5121-1 and Table ISTB-5221-1 provides an acceptable level of quality and safety.

5.0 Proposed Alternative and Basis for Use

For the pumps listed in Table P-1, if a measured reference value is below 0.05 ips for a particular vibration measurement location, then subsequent test results for that location may be compared to an acceptable range based on 0.05 ips. In addition to the Code requirements, all pumps in the IST Program are included in and will remain in the North Anna Predictive Maintenance Program regardless of their smooth running status.

Using the provisions of this relief request as an alternative to the specific requirements of ISTB-3300, ISTB-5120 and ISTB-5220, and Table ISTB-5121-1 and Table ISTB-5221-1 will provide adequate indication of pump performance and continue to provide an acceptable level of quality and safety. Therefore, pursuant to 10CFR50.55a(a)(3)(i), Relief Request P-1 requests relief from the specific ISTB requirements identified in this request.

6.0 Duration of the Proposed Alternative

The proposed alternative described in Relief Request P-1 will be used for the North Anna Power Station Unit 1 Fourth Ten Year Inservice Testing Interval.

7.0 Precedents

A similar relief request for the North Anna Unit 1 Third Ten Year Inservice Testing Interval was approved by the NRC in their safety evaluation entitled "North Anna Power Station, Units Nos.1 and 2 Re: Inservice testing Program for Pumps and Valves, Third Ten Year Interval Update (TAC NOS. MB2221 and MB2222)" dated January 28, 2002.

The following relief requests for other plants that are similar to P-1 were approved by the NRC.

Pump Relief Request PRR8 for Beaver Valley 1 was approved by the NRC by letter dated 9/27/2007 (TAC NOS. MD5118 – MD5131).

Pump Relief Request PRR8 for Beaver Valley 2 was approved by the NRC by letter dated 2/14/2008 (TAC NOS. MD5595 – MD5604).

Note that Relief Request P-1 applies to all pumps within the groups listed in Table P-1. Pumps 1-CH-P-1B, 1-HV-P-20C and 1-RS-P-3B do not currently have a measured reference value below 0.05 ips for a particular vibration measurement location but are included in the relief request scope. Treating the pumps as groups is a departure from the scope in the Beaver Valley relief requests.

8.0 References

1. ASME OM Code, 2004 Edition

Table P-1

Pump Groups	System	Code Class	OM Group	Description	Pump Type	Pump Speed (rpm)
1-CC-P-1A 1-CC-P-1B	Component Cooling	3	A	Component Cooling Water Pumps	Centrifugal	1170
1-CH-P-1A 1-CH-P-1B 1-CH-P-1C	Chemical and Volume Control/ Safety Injection Volume Control	2	A	High Head Safety Injection/Charging Pump	Centrifugal	4820
1-CH-P-2A 1-CH-P-2B	Chemical and Volume Control	2	A	Boric Acid Transfer Pumps	Centrifugal	3500
1-FW-P-3A 1-FW-P-3B	Feedwater	3	B	Motor Driven Auxiliary Feedwater Pumps	Centrifugal	3560
1-HV-P-20A 1-HV-P-20B 1-HV-P-20C	Heating and Ventilation	3	A	Control and Relay Room Chilled Water Pumps	Centrifugal	3560
1-HV-P-22A 1-HV-P-22B 1-HV-P-22C	Heating and Ventilation	3	A	Control and Relay Room Condenser Water Pumps	Centrifugal	1760
1-RH-P-1A 1-RH-P-1B	Residual Heat Removal	2	A	Residual Heat Removal Pumps	Centrifugal	1780
1-RS-P-3A 1-RS-P-3B	Recirculation Spray	3	B	Casing Cooling Pump	Centrifugal	1780
1-SW-P-1A 1-SW-P-1B	Service Water	3	A	Main Service Water Pump	Centrifugal	1180

RELIEF REQUEST P-2

Proposed alternative in accordance with 50.55a(f)(6)(i) and 10CFR50.55a(a)(3)(i) Code requirement is impractical and the alternative provides acceptable level of quality and safety.

1.0 ASME Code Components Affected

Pump(s): 1-RH-P-1A
1-RH-P-1B

System: Residual Heat Removal

Group: A

Class: 2

Function: The residual heat removal pumps remove decay heat from the reactor core and the reactor coolant system during plant cool down.

2.0 Applicable Code Edition and Addenda

ASME OM Code, 2004 Edition

3.0 Applicable Code Requirements

ISTB-3400, "Frequency of Inservice Tests," states: "An inservice test shall be run on each pump as specified in Table ISTB-3400-1."

Table ISTB-3400-1, "Inservice Test Frequency," requires an inservice test be run on each Group A pump nominally every 3 months.

ISTB-5121 requires that Group A tests be conducted with the pump operating at a specified reference point. In addition, ISTB-5121(b) states that, "The resistance of the system shall be varied until the flow rate equals the reference point. The differential pressure shall then be determined and compared to its reference value. Alternatively, the flow rate shall be varied until the differential pressure equals the reference point and the flow rate determined and compared to the reference flow rate value."

ISTB-5123 requires that comprehensive tests be conducted with the pump operating at a specified reference point. In addition, ISTB-5123(b) states that "For centrifugal and vertical line shaft pumps, the resistance of the system shall be varied until the flow rate equals the reference point. The differential pressure shall then be determined and compared to its reference value. Alternatively, the flow rate shall be varied until the differential pressure equals the reference point and the flow rate determined and compared to the reference flow rate value."

4.0 Reason for Request

ISTB-3400 and Table ISTB-3400-1

The residual heat removal pumps are located inside containment and are low pressure (600 psig design pressure) pumps that take suction from and discharge to the reactor coolant system (RCS). The RCS is maintained at 2235 psig and the containment atmosphere is maintained at sub-atmospheric pressure during normal operation. The RHR system is considered to be a low pressure system that could be damaged if exposed to the normal operating RCS pressure of approximately 2235 psig. Therefore, to ensure system integrity or prevent system overpressurization/damage, the Technical Requirements Manual requires that the RHR subsystem be isolated from the RCS prior to the RCS exceeding 500 psig by closing and de-energizing both remote operated RHR suction isolation valves and locking the associated breakers open.

Therefore, testing the residual heat removal pumps during normal operation is considered impractical.

ISTB-5121 and ISTB-5123

As a result of industry experience and NRC guidance (Generic Letter 88-17) concerning the loss of decay heat removal capability, North Anna Power Station practices a policy of minimizing perturbations to RHR pump flow and system configuration when decay heat must be removed during hot shutdowns, cold shutdowns and reactor refueling outages.

Therefore, to permit RHR pump testing during cold shutdown and reactor refueling outage testing without significant system perturbations, the RHR pumps will be tested in a range of flows, and the results will be compared to acceptance criteria based on a portion of the pump curve and the hydraulic acceptance criteria given in ISTB. The guidelines set forth in Code Case OMN-16, "Use of a Pump Curve for Testing," will be followed.

Past vibration data for the subject pumps have been reviewed and it has been determined that pump vibration does not vary significantly with flow rate over the range of the test flow rates. This alternative to the requirements of ISTB-5121 and ISTB-5123 provides an acceptable level of quality and safety.

5.0 Proposed Alternative and Bases for Use

ISTB-3400 and Table ISTB-3400-1

These pumps will be tested every cold shutdown outage and reactor refueling outage but not more frequently than once every three months.

Using the provisions of this relief request as an alternative to the specific requirements of ISTB-3400 and Table ISTB-3400-1 identified above, which have been identified to be impractical, will provide adequate indication of pump performance. Therefore, pursuant to 10 CFR 50.55a(f)(6)(i), Relief Request P-2 requests relief from the specific ISTB Code requirements identified in this relief request.

ISTB-5121 and ISTB-5123

Acceptance criteria will be based on a portion of the pump curve and not on discreet reference values. The guidelines set forth in Code Case OMN-16 will be followed.

Using the provisions of this relief request as an alternative to the specific requirements of ISTB-5121 and ISTB-5123 identified above will provide adequate indication of pump performance and continue to provide an acceptable level of quality and safety. Therefore, pursuant to 10 CFR 50.55a(a)(3)(i), Relief Request P-2 requests relief from the specific ISTB Code requirements identified in this relief request.

6.0 Duration of the Proposed Alternative

The proposed alternative described in Relief Request P-2 will be used for the North Anna Power Station Unit 1 Fourth Ten Year Inservice Testing Interval.

7.0 Precedents

A similar relief request was approved by the NRC in their safety evaluation entitled "North Anna Power Station, Units Nos.1 and 2 Re: Inservice testing Program for Pumps and Valves, Third Ten Year Interval Update (TAC Nos. MB2221 and MB2222)" dated January 28, 2002. The pump curve portion of this relief request was based on OMN-9 "Use of a Pump Curve for Testing" and the conditions identified in Regulatory Guide 1.192, Operation and Maintenance Code Case Acceptability, ASME OM Code. OMN-16 incorporates the conditions identified in Regulatory Guide 1.192.

The following relief requests for another plant that are similar to portions of P-2 were approved by the NRC.

Pump Relief Request PRR7 for Beaver Valley 1 was approved by the NRC by letter dated 9/27/2007 (TAC NOS. MD5118 – MD5131) and applies to ISTB-3400 and Table ISTB-3400-1.

Pump Relief Request PRR3 for Beaver Valley 1 was approved by the NRC by letter dated 9/27/2007 (TAC NOS. MD5118 – MD5131) and applies to ISTB-5121 and ISTB-5123. PRR4 references NUREG-1482, Section 5.2.2, "Reference Curves.," which gives guidance based on OMN-9 and the conditions in Regulatory Guide 1.192. OMN-16 incorporates the conditions identified in Regulatory Guide 1.192.

8.0 References

1. ASME OM Code, 2004 Edition

RELIEF REQUEST P-3

Proposed alternative in accordance with 10CFR50.55a(a)(3)(i)
Alternative provides acceptable level of quality and safety.

1.0 ASME Code Components Affected

Pump(s): 1-SW-P-1A
1-SW-P-1B

System: Service Water

Group: A

Class: 3

Function: The service water pumps supply cooling water to the component cooling and recirculation spray heat exchangers as well as other safety related components.

2.0 Applicable Code Edition and Addenda

ASME OM Code, 2004 Edition

3.0 Applicable Code Requirements

ISTB-5121 requires that Group A tests be conducted with the pump operating at a specified reference point. ISTB-5121(b) states that, "The resistance of the system shall be varied until the flow rate equals the reference point. The differential pressure shall then be determined and compared to its reference value. Alternatively, the flow rate shall be varied until the differential pressure equals the reference point and the flow rate determined and compared to the reference flow rate value."

ISTB-5123 requires that comprehensive tests be conducted with the pump operating at a specified reference point. ISTB-5123(b) states that "For centrifugal and vertical line shaft pumps, the resistance of the system shall be varied until the flow rate equals the reference point. The differential pressure shall then be determined and compared to its reference value. Alternatively, the flow rate shall be varied until the differential pressure equals the reference point and the flow rate determined and compared to the reference flow rate value."

4.0 Reason for Request

Plant conditions may not be the same as when the reference values were established. The SW system is dependent on seasonal water temperatures and flow may vary significantly from the cool winter months to the warm summer months. Many reference points must be established to anticipate varying plant conditions. In the service water system, reproducing one of these reference flow points is not practical with the large butterfly valves installed and it may not be desirable to alter cooling because of other plant operating parameters.

Therefore, pumps will be tested in a range of flows and the results will be compared to acceptance criteria based on a portion of the pump curve and the hydraulic acceptance criteria given in ISTB.

Past vibration data for the subject pumps have been reviewed and it has been determined that pump vibration does not vary significantly with flow rate over the range of the test flow rates. This alternative to the requirements of ISTB-5121 and ISTB-5123 provides an acceptable level of quality and safety.

5.0 Proposed Alternative and Bases for Use

Acceptance criteria will be based on a portion of the pump curve and not on discreet reference values. The guidelines set forth in Code Case OMN-16, "Use of a Pump Curve for Testing," will be followed.

Using the provisions of this relief request as an alternative to the specific requirements of ISTB-5121 and ISTB-5123 identified above will provide adequate indication of pump performance and continue to provide an acceptable level of quality and safety. Therefore, pursuant to 10 CFR 50.55a(a)(3)(i), Relief Request P-3 requests relief from the specific ISTB Code requirements identified in this relief request.

6.0 Duration of the Proposed Alternative

The proposed alternative described in Relief Request P-3 will be used for the North Anna Power Station Unit 1 Fourth Ten Year Inservice Testing Interval.

7.0 Precedents

A similar relief request for the North Anna Unit 1 Third Ten Year Inservice Testing Interval was approved by the NRC in their safety evaluation entitled "North Anna Power Station, Units Nos.1 and 2 (North Anna 1 and 2) – Relief Requests P-3 and P-4 (TAC Nos. MC6663, MC6664, MC6665, and MC6666)" dated April 11, 2006. The relief request was based on OMN-9 "Use of a Pump Curve for Testing" and the conditions identified in Regulatory Guide 1.192, Operation and Maintenance Code Case Acceptability, ASME OM Code. OMN-16 incorporates the conditions identified in Regulatory Guide 1.192.

The following relief request for another plant that is similar to P-3 was approved by the NRC.

Pump Relief Request PRR4 for Beaver Valley 2 was approved by the NRC by letter dated 2/14/2008 (TAC NOS. MD5595 – MD5604). PRR4 references NUREG-1482, Section 5.2.2, "Reference Curves.," which gives guidance based on OMN-9 and the conditions in Regulatory Guide 1.192. OMN-16 incorporates the conditions identified in Regulatory Guide 1.192.

8.0 References

1. ASME OM Code, 2004 Edition

RELIEF REQUEST P-4

Proposed alternative in accordance with 10CFR50.55a(a)(3)(i)
Alternative provides acceptable level of quality and safety.

1.0 ASME Code Components Affected

Pump(s): 1-CC-P-1A
1-CC-P-1B

System: Component Cooling

Group: A

Class: 3

Function: The component cooling pumps supply cooling water to the component cooling heat exchangers, which remove heat from systems containing radioactive fluids.

2.0 Applicable Code Edition and Addenda

ASME OM Code, 2004 Edition

3.0 Applicable Code Requirements

ISTB-5121 requires that Group A tests be conducted with the pump operating at a specified reference point. ISTB-5121(b) states that, "The resistance of the system shall be varied until the flow rate equals the reference point. The differential pressure shall then be determined and compared to its reference value. Alternatively, the flow rate shall be varied until the differential pressure equals the reference point and the flow rate determined and compared to the reference flow rate value."

ISTB-5123 requires that comprehensive tests be conducted with the pump operating at a specified reference point. ISTB-5123(b) states that "For centrifugal and vertical line shaft pumps, the resistance of the system shall be varied until the flow rate equals the reference point. The differential pressure shall then be determined and compared to its reference value. Alternatively, the flow rate shall be varied until the differential pressure equals the reference point and the flow rate determined and compared to the reference flow rate value."

4.0 Reason for Request

Plant conditions may not be the same as when the reference values were established. Many reference points must be established to anticipate varying plant conditions. In the component cooling system, reproducing one of these reference flow points is difficult with the large butterfly valves installed and it may not be desirable to alter cooling because of other plant operating parameters. Therefore, pumps will be tested in a range of flows and the results will be compared to acceptance criteria based on a portion of the pump curve and the hydraulic acceptance criteria given in ISTB.

Past vibration data for the subject pumps have been reviewed and it has been determined that pump vibration does not vary significantly with flow rate over the range of the test flow rates. This alternative to the requirements of ISTB-5121 and ISTB-5123 provides an acceptable level of quality and safety.

5.0 Proposed Alternative and Bases for Use

Acceptance criteria will be based on a portion of the pump curve and not on discreet reference values. The guidelines set forth in Code Case OMN-16, "Use of a Pump Curve for Testing," will be followed.

Using the provisions of this relief request as an alternative to the specific requirements of ISTB-5121 and ISTB-5123 identified above will provide adequate indication of pump performance and continue to provide an acceptable level of quality and safety. Therefore, pursuant to 10 CFR 50.55a(a)(3)(i), Relief Request P-4 requests relief from the specific ISTB Code requirements identified in this relief request.

6.0 Duration of the Proposed Alternative

The proposed alternative described in Relief Request P-4 will be used for the North Anna Power Station Unit 1 Fourth Ten Year Inservice Testing Interval.

7.0 Precedents

A similar relief request for the North Anna Unit 1 Third Ten Year Inservice Testing Interval was approved by the NRC in their safety evaluation entitled "North Anna Power Station, Units Nos.1 and 2 (North Anna 1 and 2) – Relief Requests P-3 and P-4 (TAC Nos. MC6663, MC6664, MC6665, and MC6666)" dated April 11, 2006. The relief request was based on OMN-9 "Use of a Pump Curve for Testing" and the conditions identified in Regulatory Guide 1.192, Operation and Maintenance Code Case Acceptability, ASME OM Code. OMN-16 incorporates the conditions identified in Regulatory Guide 1.192.

The following relief request for another plant that is similar to P-4 was approved by the NRC.

Pump Relief Request PRR3 for Beaver Valley 1 was approved by the NRC by letter dated 9/27/2007 (TAC NOS. MD5118 – MD5131). PRR3 references NUREG-1482, Section 5.2.2, "Reference Curves.," which gives guidance based on OMN-9 and the conditions in Regulatory Guide 1.192. OMN-16 incorporates the conditions identified in Regulatory Guide 1.192.

8.0 References

1. ASME OM Code, 2004 Edition

RELIEF REQUEST P-5

Proposed alternative in accordance with 10 CFR 50.55a(f)(6)(i)
Alternative provides acceptable level of quality and safety.

1.0 ASME Code Components Affected

Pump(s): 1-CH-P-2A
1-CH-P-2B

System: Chemical and Volume Control

Group: A

Class: 2

Function: The boric acid transfer pumps supply boric acid to the suction of the charging pumps for emergency boration. During normal operation they recirculate the contents of the boron injection tank and the boric acid storage tanks.

2.0 Applicable Code Edition and Addenda

ASME OM Code, 2004 Edition

3.0 Applicable Code Requirements

Table ISTB-3000-1 requires that flow rate be measured during a Group A test.

Table ISTB-3400-1 requires that a Group A inservice test be run on each pump nominally every 3 months.

ISTB-5121 requires that Group A tests be conducted with the pump operating at a specified reference point. ISTB-5121(b) states that, "The resistance of the system shall be varied until the flow rate equals the reference point. The differential pressure shall then be determined and compared to its reference value. Alternatively, the flow rate shall be varied until the differential pressure equals the reference point and the flow rate determined and compared to the reference flow rate value."

4.0 Reason for Request

Permanent flow instrumentation is not installed on the recirculation piping, which is the only test loop available for quarterly testing. To measure flow, flow must be established to the charging pump suction lines. This flow would increase the reactor coolant system (RCS) boron inventory and cause a reactivity transient during normal operation.

The pump test requires an extended period of boric acid injection which should only be performed when borating the reactor in preparation for refueling when the boron concentration is low. The test cannot be conducted during mid-cycle cold shutdowns because the boron concentration in the RCS too high. The potential for over boration under these conditions could delay the ability of the plant to restart, due to the time required to dilute the excess boron in preparation for startup. Therefore, testing the boric acid transfer pumps to the requirements of Table ISTB-3000-1, Table ISTB-3400-1 and ISTB-5121 is not considered practical.

5.0 Proposed Alternative and Bases for Use

These pumps will be tested every quarter on the recirculation loop, and differential pressure and vibration will be measured. Every reactor refueling, a comprehensive test measuring differential pressure, flow rate and vibration will be performed.

The removal of quarterly flow testing of these pumps has been deemed acceptable per NRC Generic Letter 89-04, Position 9, which allows elimination of minimum flow test line flow rate measurements providing inservice tests are performed during cold shutdowns or refueling periods under full or substantial flow conditions where pump flow rate is recorded and evaluated. The proposed alternate testing is consistent with this philosophy and the intent of Position 9.

Using the provisions of this relief request as an alternative to the specific requirements of ISTB-3000-1, Table ISTB-3400-1 and ISTB-5121 identified above, which have been identified to be impractical, will provide adequate indication of pump performance. Therefore, pursuant to 10 CFR 50.55a(f)(6)(i), Relief Request P-5 requests relief from the specific ISTB Code requirements identified in this relief request.

6.0 Duration of the Proposed Alternative

The proposed alternative described in Relief Request P-5 will be used for the North Anna Power Station Unit 1 Fourth Ten Year Inservice Testing Interval.

7.0 Precedents

A similar relief request for the North Anna Unit 1 Third Ten Year Inservice Testing Interval was approved by the NRC in their safety evaluation entitled "North Anna Power Station, Units Nos.1 and 2 Re: Inservice testing Program for Pumps and Valves, Third Ten Year Interval Update (TAC Nos. MB2221 and MB2222)" dated January 28, 2002.

The following relief requests for other plants that are similar to P-5 were approved by the NRC.

Pump Relief Request PR-06 for St. Lucie Units 1 and 2 was approved by the NRC by letter dated 9/25/2008 (TAC NOS. MD7741 through MD7752).

Pump Relief Request RR-P-2 for Farley Units 1 and 2 was approved by the NRC by letter dated 8/06/2008 (TAC NOS. MD8746 through MD8753).

8.0 References

1. ASME OM Code, 2004 Edition

RELIEF REQUEST P-6

Proposed alternative in accordance with 10 CFR 50.55a(f)(6)(i)
Alternative provides acceptable level of quality and safety.

1.0 ASME Code Components Affected

Pump(s): 1-RS-P-2A
1-RS-P-2B

System: Recirculation Spray

Group: B

Class: 2

Function: The outside recirculation spray pumps supply borated spray to cool and depressurize the containment atmosphere following a containment depressurization actuation signal and maintain containment subatmospheric following an accident.

2.0 Applicable Code Edition and Addenda

ASME OM Code, 2004 Edition

3.0 Applicable Code Requirements

ISTB-3300(e)(1) (Reference Values) requires that reference values shall be established within ±20% of pump design flow rate for comprehensive tests.

ISTB-3100, "Preservice Testing," ISTB-3100(b) requires preservice testing of vertical line shaft pumps to be performed in accordance with ISTB-5210, "Preservice Testing." ISTB-5210(a) states that in systems where resistance can be varied, flow rate and differential pressure shall be measured at a minimum of 5 points. If practicable, these points shall be from pump minimum flow to at least pump design flow. A pump curve shall be established based on the measured points. At least one point(s) shall be designated as the reference point(s).

4.0 Reason for Request

ISTB-3300(e)(1)

The test loop for the outside recirculation pumps consists of a 10" pump discharge line feeding into a 4" recirculation line which feeds back to the pump sump. Refer to Figure P-6.1. The LOCA containment analysis assumes that the outside recirculation spray pumps deliver 3350 gpm. The LOCA containment analysis flow rate of 3350 gpm will be used as the pump design flow. With the 4" recirculation line as the test loop, the pump design flow rate of 3350 gpm cannot be achieved. To be within 20% of the pump design flow rate requires a reference flow of 2680 gpm. A flow rate of approximately 1450 gpm can be established in the test loop, which is within 57% of the pump safety analysis flow rate but not within 20% as required by ISTB-3300(e)(1).

Flow cannot be established in the existing discharge piping because the flow would be directed to the spray headers inside containment, which would spray water throughout the containment. Also, the discharge piping was not designed to be temporarily reconfigured so that pump design flow could be achieved.

The outside recirculation spray pumps for Unit 2 were subject to long term full flow testing in 1979, during the construction phase. A test loop was established by replacing the spray nozzles from each of the two spray headers (150 nozzles for each header) with plugs, discharging pump flow to the spray headers and directing the flow back to the containment sump. A dike was constructed around the containment sump to simulate water levels in containment that are expected during an accident. The outside recirculation spray pumps took suction from the sump, thus, completing the loop. Re-establishing this full flow test loop for the purpose of periodic testing would require plant modifications and is not practicable.

The spray headers are inaccessible without a significant amount of scaffolding. Even if the nozzles were accessible, the plugging of 300 spray nozzles, running the full flow test and returning the system to its operable configuration present substantial challenges in terms of complexity of the temporary modifications, labor intensive nature of the modifications, and controls and post modification testing needed to ensure that the system is returned to the original configuration.

ISTB-3100 and ISTB-5210(a)

As stated in ISTB-5210(a), "If practicable, these points shall be from pump minimum flow to at least pump design flow." With the restrictions described above, the highest flow rate that can be measured while maintaining stable test conditions is approximately 1450 gpm or within 57% of the pump design flow rate, which is less than the pump design flow. All data points for the preservice test pump curve must be at or below 1450 gpm.

5.0 Proposed Alternative and Bases for Use

ISTB-3300(e)(1)

As an alternative to testing within 20% of the pump design flow rate, the reference values will be established at approximately 1450 gpm or within 57% of the design flow. It is our understanding that testing at design flow is important for pumps with characteristic head-flow curves that are flat or gently sloping in the low flow region (little change in developed head with increasing flow). In the low flow region, increasing internal flows, usually due to wear, are difficult if not impossible to detect. Pumps with the "flat" curves at low flows should be tested at or near pump design flow to determine if increasing internal recirculation flows have degraded pump performance to the point where accident requirements cannot be met. This situation does not apply to the outside recirculation pumps if they are tested within 57% of design flow. Testing at the reference flow rate will detect pump degradation because the pump curve is well sloped at the point of testing. Refer to Figure P-6.2.

In addition to the requirements of ISTB, the outside recirculation pumps in the ASME Inservice Testing Program are included in the North Anna Predictive Maintenance Program. The North Anna Predictive Maintenance Program currently employs predictive monitoring techniques such as:

- vibration monitoring and analysis beyond that required by ISTB,
- oil sampling and analysis where applicable (e.g., for pumps with sufficiently large oil reservoirs).

If the measured parameters are outside the normal operating range or are determined by analysis to be trending toward an unacceptable degraded state, appropriate actions are taken that may include:

- increased monitoring to establish rate of change,
- review of component specific information to identify cause, and
- removal of the pump from service to perform maintenance.

Using the provisions of this relief request as an alternative to the specific requirements of Table ISTB-3000-1 and Table ISTB-3400-1 identified above, which have been identified to be impractical, will provide adequate indication of pump performance. Therefore, pursuant to 10 CFR 50.55a(f)(6)(i), Relief Request P-6 requests relief from the specific ISTB Code requirements identified in this relief request.

ISTB-3100 and ISTB-5210(a)

The five data points for the preservice test pump curve will be measured at points at or below 1450 gpm. Should a preservice or baseline curve be required, the manufacturers curve would be used in conjunction with the pump minimum operating point curves and the points obtained would be reconciled to the manufacturers curve to provide assurance of acceptable pump operation.

6.0 Duration of the Proposed Alternative

The proposed alternatives described in Relief Request P-6 will be used for the North Anna Power Station Unit 1 Fourth Ten Year Inservice Testing Interval.

7.0 Precedents

A similar relief request for the North Anna Unit 1 Third Ten Year Inservice Testing Interval was approved by the NRC in their safety evaluation entitled "North Anna Power Station, Units Nos.1 and 2 Re: Inservice testing Program for Pumps and Valves, Third Ten Year Interval Update (TAC Nos. MB2221 and MB2222)" dated January 28, 2002.

The following relief request for another plant that is similar to P-6 was approved by the NRC.

Pump Relief Request PRR11 for Beaver Valley 1 was approved by the NRC by letter dated 9/27/2007 (TAC NOS. MD5118 – MD5131).

8.0 References

1. ASME OM Code, 2004 Edition

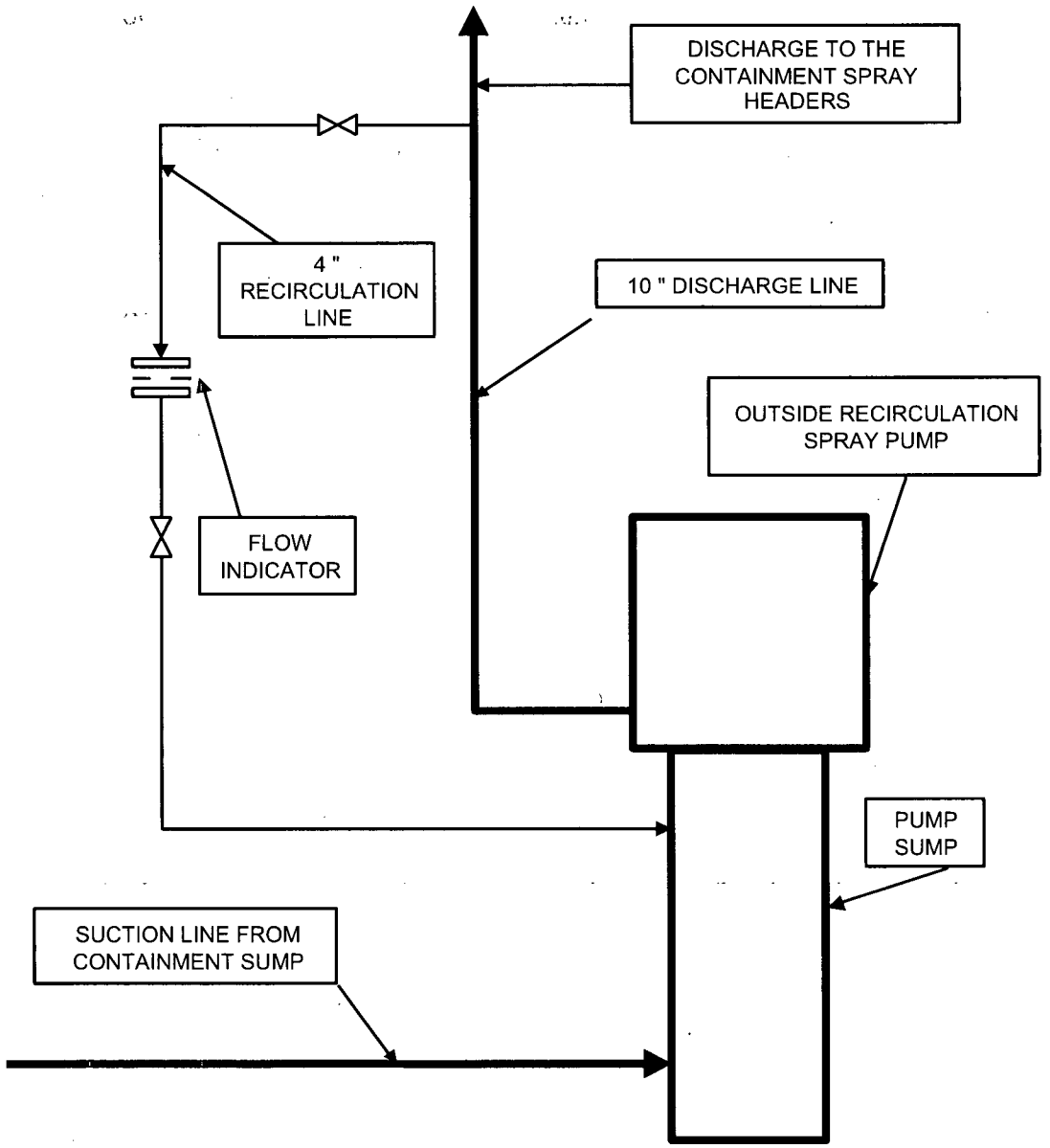
DISCHARGE TO THE CONTAINMENT SPRAY HEADERS
4 " RECIRCULATION LINE
10 " DISCHARGE LINE
OUTSIDE RECIRCULATION SPRAY PUMP
FLOW INDICATOR
PUMP SUMP
SUCTION LINE FROM CONTAINMENT SUMP

FIGURE P-6.1

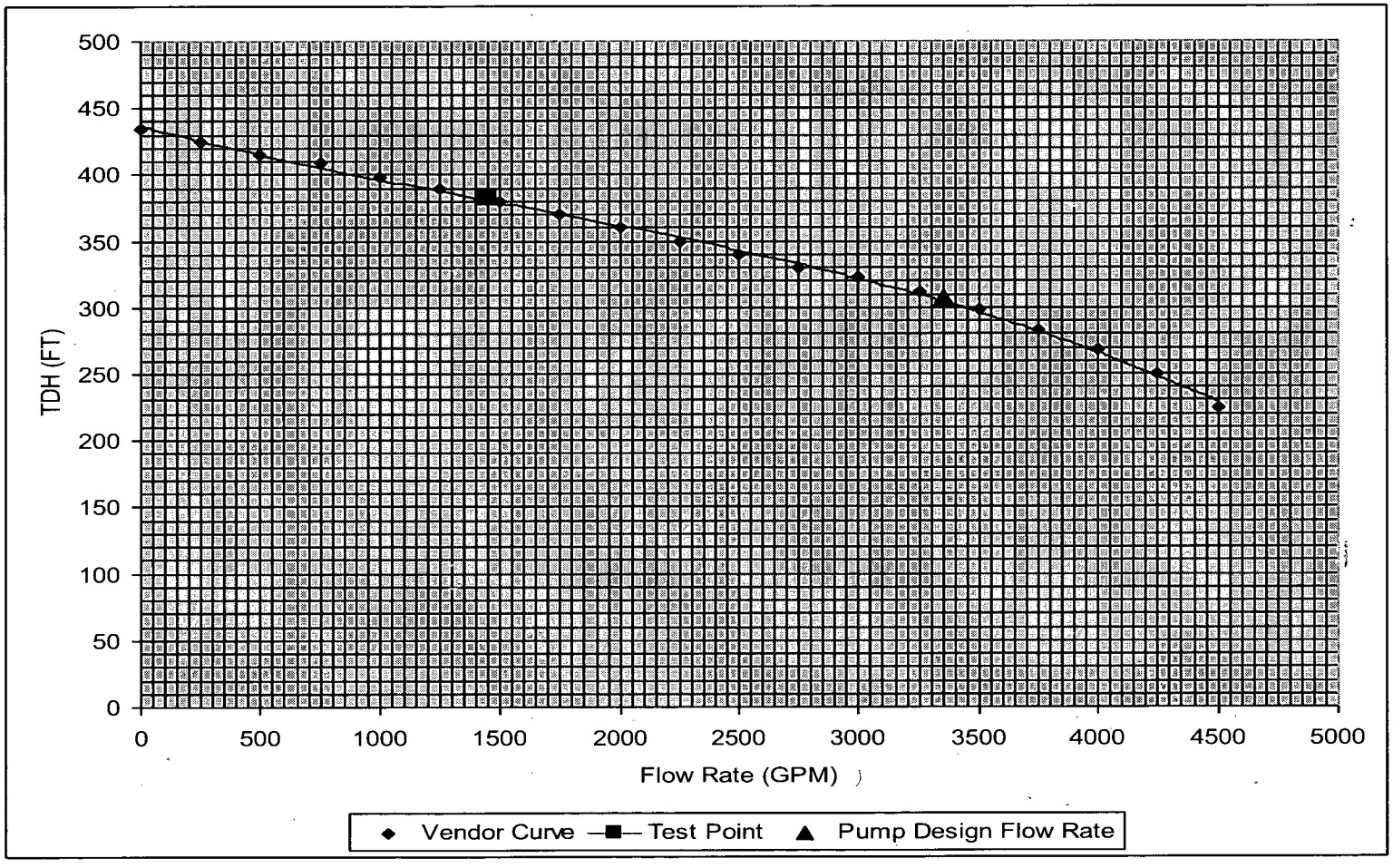
500
450
400
350
300
250
200
150
100
50
0
TDH (FT)
0
500
1000
1500
2000
2500
3000
3500
4000
4500
5000
Flow Rate (GPM)
Vendor Curve
Test Point
Pump Design Flow Rate

FIGURE P-6.2

RELIEF REQUEST P-7

Proposed alternative in accordance with 10CFR50.55a(a)(3)(i)
Alternative provides acceptable level of quality and safety.

1.0 ASME Code Components Affected

Various digital instruments used for IST of pumps.

2.0 Applicable Code Edition and Addenda

ASME OM Code, 2004 Edition

3.0 Applicable Code Requirements

ISTB-3510(b)(2), "Digital instruments shall be selected such that the reference value does not exceed 70% of the calibrated range of the instrument."

4.0 Reason for Request

Code Case OMN-6 allows the use of digital instruments where the reference value does not exceed 90% of the calibrated range of the instrument. Code Case OMN-6 applies to the 1990 Edition through the 1997 Addenda. North Anna is subject to the requirements of the ASME OM Code, 2004 Edition during the Fourth Inservice Testing Interval.

Using the provisions of this relief request as an alternative to the specific requirements of ISTB-3510(b)(2) identified above will provide adequate indication of pump performance and continue to provide an acceptable level of quality and safety. Therefore, pursuant to 10 CFR 50.55a(a)(3)(i) we request relief from the specific ISTB Code requirements identified in this relief request.

5.0 Proposed Alternative and Bases for Use

By using Code Case OMN-6, greater flexibility in the selection of instruments would be achieved, thus preventing the installation of multiple instruments to monitor the same parameter during testing. Digital instruments will be selected such that the reference value does not exceed 90% of the calibrated range of the instrument.

NUREG-1482, Revision 1, Section 5.5 states that....."The NRC has accepted Code Case OMN-6 as specified in Reg Guide 1.192, which allows each digital instrument to be such that the reference values do not exceed 90 percent of the calibrated range of the instrument."

Use of Code Case OMN-6, approved by the NRC in Reg Guide 1.192, will provide at least equivalent instrumentation accuracy requirements for the required pump testing parameters to be measured in the IST program and will provide results consistent with code requirements. This will provide adequate assurance of acceptable pump performance.

Using the provisions of this relief request as an alternative to the specific requirements of ISTB- 3510(b)(2) identified above will provide adequate indication of pump performance and continue to provide an acceptable level of quality and safety. Therefore, pursuant to 10 CFR 50.55a(a)(3)(i), Relief Request P-7 requests relief from the specific ISTB Code requirements identified in this relief request.

This alternative provides an acceptable level of quality and safety.

6.0 Duration of the Proposed Alternative

The proposed alternative described in Relief Request P-7 will be used for the North Anna Power Station Unit 1 Fourth Ten Year Inservice Testing Interval.

7.0 Precedents

The following relief requests for other plants that are similar to P-7 were approved by the NRC.

Pump Relief Request P-002 for Millstone 2 and P-003 for Millstone 3 were approved by the NRC by letter dated 10/24/2008 (TAC NOS. MD7763 through MD7771).

RP07 was previously approved for Columbia Generating Station on March 23, 2007 (TAC Nos.MD3537, MD3538, MD3539, MD3541, MD3542, MD3550, MD3551 and MD3552)

8.0 References

1. ASME OM Code, 2004 Edition

RELIEF REQUEST P-8

Proposed alternative in accordance with 10CFR50.55a(a)(3)(i)
Alternative provides acceptable level of quality and safety.

1.0 ASME Code Components Affected

Pump(s): 1-CH-P-1A
1-CH-P-1B
1-CH-P-1C

System: Chemical and Volume Control

Group: A

Class: 2

Function: These centrifugal pumps supply high pressure borated water to the reactor coolant system following a safety injection signal, and to provide normal charging to the reactor coolant system.

2.0 Applicable Code Edition and Addenda

ASME OM Code, 2004 Edition

3.0 Applicable Code Requirements

ISTB-5121(b) states that, "The resistance of the system shall be varied until the flow rate equals the reference point. The differential pressure shall then be determined and compared to its reference value. Alternatively, the flow rate shall be varied until the differential pressure equals the reference point and the flow rate determined and compared to the reference flow rate value."

ISTB-5123(b) states that "For centrifugal and vertical line shaft pumps, the resistance of the system shall be varied until the flow rate equals the reference point. The differential pressure shall then be determined and compared to its reference value. Alternatively, the flow rate shall be varied until the differential pressure equals the reference point and the flow rate determined and compared to the reference flow rate value."

4.0 Reason for Request (ISTB-5121(b) and ISTB-5123(b))

Plant conditions may not be the same as when the reference values were established. In the Chemical and Volume Control System, charging system flow must be balanced with seal injection, letdown and seal return flows to maintain a constant pressurizer level and pressure. Adjusting the charging flow rate to a specific reference test flow rate and then returning the charging system to the original flow rate places an unnecessary transient on the charging system and causes undesirable perturbations within the Reactor Coolant System.

Therefore, pumps will be tested in a range of flows and the results will be compared to acceptance criteria based a portion of the pump curve and the hydraulic acceptance criteria given in ISTB.

Past vibration data for the subject pumps have been reviewed and it has been determined that pump vibration does not vary significantly with flow rate over the range of the test flow rates. This alternative to the requirements of ISTB-5121(b) and ISTB-5123(b) provides an acceptable level of quality and safety.

5.0 Proposed Alternative and Bases for Use

Acceptance criteria will be based on a portion of the pump curve and not on discreet reference values. The guidelines set forth in Code Case OMN-16, "Use of a Pump Curve for Testing," will be followed.

Using the provisions of this relief request as an alternative to the specific requirements of ISTB-5121(b) and ISTB-5123(b) identified above will provide adequate indication of pump performance and continue to provide an acceptable level of quality and safety. Therefore, pursuant to 10 CFR 50.55a(a)(3)(i), Relief Request P-8 requests relief from the specific ISTB Code requirements identified in this relief request.

7.0 Duration of the Proposed Alternative

The proposed alternative described in Relief Request P-8 will be used for the North Anna Power Station Unit 1 Fourth Ten Year Inservice Testing Interval.

7.0 Precedents

Similar relief requests for the North Anna Unit 1 Third Ten Year Inservice Testing Interval was approved by the NRC in their safety evaluation entitled "North Anna Power Station, Units Nos.1 and 2 (North Anna 1 and 2) – Relief Requests P-3 and P-4 (TAC Nos. MC6663, MC6664, MC6665, and MC6666)" dated April 11, 2006. The relief request was based on OMN-9 "Use of a Pump Curve for Testing" and the conditions identified in Regulatory Guide 1.192, Operation and Maintenance Code Case Acceptability, ASME OM Code. OMN-16 incorporates the conditions identified in Regulatory Guide 1.192.

The following relief request for another plant that is similar to P-8 in the use of a pump curve was approved by the NRC.

Pump Relief Request PRR3 for Beaver Valley 1 was approved by the NRC by letter dated 9/27/2007 (TAC NOS. MD5118 – MD5131). PRR3 references NUREG-1482, Section 5.2.2, "Reference Curves.," which gives guidance based on OMN-9 and the conditions in Regulatory Guide 1.192. OMN-16 incorporates the conditions identified in Regulatory Guide 1.192.

These relief requests are similar to P-8 in that they use a portion of the pump curve instead of a reference point. However, the plant systems and conditions for not using a reference point differ.

8.0 References

1. ASME OM Code, 2004 Edition

3.7 ALTERNATIVE TESTING FOR NON-CODE PUMPS

According to the Minutes of the Public Meeting on Generic Letter 89-04, "Paragraph (g) of 10CFR 50.55a requires the use of Section XI of the ASME Code for inservice testing of components covered by the Code. For other components important to safety, the licensee also has the burden of demonstrating their continued operability." The minutes go on to state that, "The Code-required IST program is a reasonable vehicle to provide a periodic demonstration of the operability of pumps and valves not covered by the Code. If non-Code components are included in the ASME Code IST program (or some other licensee-developed inservice testing program) and certain Code provisions cannot be met, the Commission regulations (10 CFR 50.55a) do not require a 'request for relief' to be submitted to the staff. Nevertheless, documentation that provides assurance of the continued operability of the non-Code components through the performed tests should be available at the plant site." Non-Code components are components that are important to safety, but are not in systems or portions of systems that are classified ASME Class 1, 2 or 3. It should be noted that 10CFR50.55a now references the ASME OM Code.

North Anna Power Station has elected to include certain non-Code components in the ASME IST program. Where the Code provisions are not met for non-Code components, alternative testing is performed that is adequate to ensure continued operability. The alternate testing is described in this section. There may be other deviations from Code provisions that are not described in this section. For these cases, documentation is available at the plant site.

As indicated in the Minutes of the Public Meeting on Generic Letter 89-04, a 'request for relief' need not be submitted for non-Code components. Therefore, the alternative tests described in this section are not requests for relief but are provided for information.

NON-CODE ALTERNATIVE TESTING PNC-1

Alternative Testing for Non-Code Components
Alternative Provides Acceptable Level of Quality and Safety.

1.0 ASME Non-Code Components Affected

Pump(s): 1-EG-P-1HA 1-EG-P-1JA
1-EG-P-1HB 1-EG-P-1JB

System: Fuel Oil

Group: B

Class: NC

Function: These positive displacement pumps supply fuel oil to the emergency diesel generator fuel oil day tank which directly supplies the emergency diesel generator.

2.0 Applicable Code Edition and Addenda

ASME OM Code, 2004 Edition

3.0 Applicable Code Requirements

ISTB-3300, "Reference Values"

ISTB-3300(a) requires that initial reference values shall be determined from the results of testing meeting the requirements of ISTB-3100, "Preservice Testing," or from the results of the first inservice test.

ISTB-3300(d) requires that reference values shall be established at a point(s) of operation (reference point) readily duplicated during subsequent tests.

ISTB-3300(f) requires that all subsequent test results shall be compared to these initial reference values or to new reference values established in accordance with ISTB-3310, ISTB-3320, or ISTB-6200(c).

ISTB-5320, "Inservice Testing" (Positive Displacement Pumps)

ISTB-5321(e) and ISTB-5323(e), "Group A Test Procedure and Comprehensive Test Procedure", require that all deviations from the reference values shall be compared with the ranges of Table ISTB-5321-1 and corrective action taken as specified in ISTB-6200. Vibration measurements shall be compared to both the relative and absolute criteria shown in the alert and required action ranges of Table ISTB-5321-1.

Table ISTB-3510-1 requires that pressure be measured with instruments accurate to within ±0.5% of full scale.

ISTB-3100 requires that before implementing inservice testing an initial set of reference values shall be established for each pump.

ISTB-3400 requires that a comprehensive pump test be run on each pump biennially as specified in Table ISTB-3400-1.

ISTB-5321 for positive displacement pumps requires that test quantities be measured after the pump has been running for at least two minutes.

ISTB-3510(b)(1) requires that the full-scale range of each analog instrument shall be not greater than three times the reference value.

4.0 Reason for Alternative

ISTB-3300 and ISTB-5320

The fuel oil pump groups listed in Section 1.0 tend to be smooth running pumps. Pumps 1-EG-P-1HA, 1-EG-P-1HB and 1-EG-P-1JB have at least one vibration reference value (V_r) that is currently less than 0.05 inches per second (ips). Small values for V_r produce small acceptable ranges for pump operation. The acceptable ranges are defined in Table ISTB-5300-1 as less than or equal to $2.5V_r$. Based on a small acceptable range, a smooth running pump could be subject to unnecessary corrective action.

For very small reference values, hydraulic noise and instrument error can be a significant portion of the reading and affect the repeatability of subsequent measurements. Also, experience gathered from the North Anna preventive maintenance program has shown that changes in vibration levels in the range of 0.05 ips do not normally indicate significant degradation in pump performance.

To avoid unnecessary corrective action, a minimum value for V_r of 0.05 ips has been established for velocity measurements. This minimum value will be applied to individual vibration locations for Pumps 1-EG-P-1HA, 1-EG-P-1HB, 1-EG-P-1JA and 1-EG-P-1JB where the measured reference value is less than 0.05 ips.

When new reference values are established per ISTB-3310, ISTB-3320 or ISTB-6200(c), the measured parameters will be evaluated for each location to determine if the provisions of this non-Code alternative test description still apply. If the measured V_r is greater than 0.05 ips, the requirements of ISTB-3300 will be applied. Conversely, if the measured V_r is less than 0.05 ips, a minimum value of 0.05 ips will be used for V_r even if the previous reference value was above 0.05 ips. This process will be applied to all of the EG pumps.

Table ISTB-3510-1

To comply with the pressure instrument accuracy requirement of ±0.5% for the preservice and comprehensive pump tests described in Table ISTB-3510-1, temporary pressure instrumentation must be installed. The permanently installed instruments do not meet the ±0.5% accuracy requirement. Using more accurate temporary pressure instruments with the diesel fuel oil supply system presents a hardship in that the diesel fuel oil contaminates the instruments. These instruments must then be dedicated for use with the diesel fuel oil transfer pumps and cannot be used with water systems.

ISTB-3100 and 3400

The installed pressure instruments do meet the accuracy requirements of the Group A test which is ±2% of full scale. The Group A test requires the measurement of vibration as do the preservice test and the comprehensive test. The current testing for the diesel fuel oil transfer pumps is performed within 20% of the design flow rate, which is one of the requirements of the preservice and comprehensive tests. Therefore, for the diesel fuel oil transfer pumps, the Group A test will provide a similar level of safety as the preservice and comprehensive tests.

ISTB-5321

The pump operating time is limited due to operational restraints. While the diesels are running, these pumps start automatically when the fuel oil level in the day tank reaches the low level switch, and stop when the level reaches the high level switch. The pump run time can vary depending upon the diesel load and the resulting fuel consumption rate. If the pumps are allowed to run for two minutes prior to measuring the test quantities and the fuel consumption rate is low, not enough time is available to gather all of the required ISTB test data.

ISTB-3510(b)(1)

The discharge pressure gauges have a full-scale range of 0 to 30 psig. Discharge pressure reference values range from 7.5 to 8.5 psig, less than the required 1/3 of full-scale or 10 psig. Test results show that the data is repeatable. Therefore, even though the reference values are less than 1/3 full-scale, the accuracy of the instruments provides acceptable results.

5.0 Alternative

As an alternative to performing the preservice tests, the diesel fuel oil transfer pumps will be subject to the requirements of the Group A test as described in ISTB-5321. As an alternative to performing the biennial comprehensive tests, the diesel fuel oil transfer pumps will be subject to biennial Group A tests as described in ISTB-5321. The Group A tests will be performed within 20% of the design flow rate.

The measurement of ISTB quantities will begin when the pump automatically starts on a low tank level signal.

Discharge pressure measurements will be performed with reference values slightly below the 1/3 full-scale requirement.

6.0 Duration of Alternative

The alternative described in PNC-1 will be used for the North Anna Power Station Unit 1 Fourth Ten Year Inservice Testing Interval.

Note: The diesel oil transfer pumps are positive displacement pumps. According to, Table ISTB-3000-1, discharge pressure, not differential pressure, must be measured for positive displacement pumps.

4.0 VALVE INSERVICE TESTING PROGRAM DESCRIPTION

4.1 PROGRAM DEVELOPMENT PHILOSOPHY

North Anna Technical Specification 5.5.7 describes the surveillance requirements that apply to the inservice testing of ASME Code Class 1, 2 and 3 valves. The North Anna Unit 1 Inservice Testing (IST) Program for Valves has been established to meet the requirements of 10CFR50, the ASME OM Code, Subsection ISTC and Technical Specifications.

The scope of the program includes ASME Class 1, 2 and 3, and certain non-Code class valves that are required to perform a specific function in shutting down the reactor to the safe shutdown condition, maintaining the safe shutdown condition or mitigating the consequences of an accident.

ISTC defines the rules and requirements of inservice testing of Code Class 1, 2, and 3 valves and states that each valve to be tested by the rules of this subsection shall be identified by the owner and listed in the plant records.

The purpose of the IST Program Plan is to identify the valves that are considered by Virginia Electric and Power (Dominion) Company as having a safety function and are therefore subject to the testing requirements of ISTC. The intent of the Code is to assess operational readiness and detect potentially adverse changes in the mechanical condition of these valves. The relief requests for the IST Program Plan identify Code requirements considered to be impractical or for which an alternate testing method is proposed, provide technical basis for the request and propose alternate testing when warranted. The relief requests are presented in Section 4.5

North Anna Unit 1 is committed to meeting the leak rate testing requirements of:

1) 10CFR50, Appendix J, Option B for containment isolation valves and

2) ISTC for other valves for which seat leakage is limited to a specific maximum amount (i.e. pressure isolation valves) unless relief is specifically requested from ISTC requirements.

4.2 PROGRAM IMPLEMENTATION

The Valve Inservice Test Program is executed as part of the normal plant surveillance routine. Three types of tests are conducted as part of the Valve Test Program:

1) valve exercise tests,
2) valve leakage tests and
3) safety valve tests.

The exercise tests verify that:

1) the valve strokes properly,
2) the valve responds to control commands,
3) the valve stroke time is within specific limits and
4) remote position indication accurately reflects the observed valve position. Remote valve position indication will be verified every two years.

Fail safe valves are tested by observing the valve operation upon loss of actuating power. In most cases, this can be accomplished using normal control circuits.

Power operated valves which are scheduled to be exercised during cold shutdown are subject to the requirements of ISTC-3521(g) which states that:

> "valve exercising during cold shutdown shall commence within 48 hr of achieving cold shutdown, and continue until all testing is complete or the plant is ready to return to power. For extended outages, testing need not be commenced in 48 hr, provided all valves required to be tested during cold shutdown will be tested prior to plant startup. However, it is not the intent of this subsection to keep the plant in cold shutdown in order to complete cold shutdown testing."

Check valves which are scheduled to be exercised during cold shutdown are subject to the requirements of ISTC-3522(e) which is similar to ISTC-35221(g).

Relief and Safety valves are required to be tested to the requirements of ISTC, Appendix I.

Certain valves cannot be full stroke exercised during normal operation following maintenance. These valves are described in the cold shutdown justifications (refer to Section 4.6) and reactor refueling justifications (refer

to Section 4.7). If maintenance cannot be deferred to a shutdown condition, then an engineering evaluation must be performed prior to the maintenance to determine the effect of the maintenance on valve performance. If the evaluation shows that performance will not be affected, then no post maintenance testing is required. A partial stroke test will be performed if practicable.

To test check valves to the full open position, the maximum required accident condition flow must be measured through the valve. In certain cases, this flow cannot be practically established or verified. Per ISTC-5221(c), disassembly and inspection of the check valves on a sampling basis is an acceptable alternative testing method.

4.3 PROGRAM ADMINISTRATION

The engineering staff at North Anna is responsible for the administration of the IST Program for Valves. The operations staff is responsible for performing the periodic tests as required by this program. The IST Program for Valves is implemented by station periodic test procedures.

4.4 VALVE INSERVICE TEST TABLE

The Valve Inservice Test Tables are the essence of the Valve Program to meet ISTC requirements. The tables reflect the positions taken in support of the relief requests. To aid the reader in the interpretation of the tables, brief explanations of the table headings and abbreviations are provided.

For non-Code valves, a request for relief is not necessary when provisions of the Code are not met. Section 4.8 contains a discussion of the testing requirements for non-Code valves and descriptions of alternative testing in cases where the provisions of the Code are not met.

1) Valve Number - Each valve in the plant has a unique "mark" number which identifies the system to which the equipment belongs and type of equipment.

2) Drawing and Sheet Number, Coordinate - The specific coordinates of each valve are supplied to facilitate location of the valves on the flow diagrams provided.

3) Valve Type - A brief description of the actuator and valve type.

The following abbreviations are used to describe actuator types. Valves may be actuated in more than one way.

MO - Motor Operated
AO - Pneumatic (Air Operated)
MAN - Manually Operated
SO - Electronic solenoid Operated Valves

4) Size - Nominal pipe diameter to which valve connects is given in inches.

5) ASME Class - ASME Code Class of each valve as per 10 CFR 50.55a and Regulatory Guide 1.26, Revision 3.

NOTE: NC is for non-Code valves. These valves are important to safety but are not in systems or portions of systems that are classified ASME Class 1, 2 or 3.

6) ISTC Category - Categories are defined by ISTC-1300. Each valve has specific testing requirements which are determined by the category to which it belongs. Valves marked with an "E" are passive valves.

7) Isolation Valve Type - Valves that are assigned a maximum leakage. The following abbreviations are used to describe the main isolation valve types:

CIV - Containment Isolation Valve subject to Appendix J, Option B leakage testing as described in Technical Specification 5.5.15.

PIV - Pressure Isolation Valve which protects low pressure safety related piping from RCS pressure. Technical Specification Table B 3.4.14-1 specifies the pressure isolation valves that are tested in accordance with this program.

C&P - Valves that serve both CIV and PIV functions

8) Test Required - Testing requirements identified for the valves are identified here.

ST - Stroke times shall be measured per ISTC-5100 or as modified by a specific relief request.

EV - Exercise Category A and B valve for operability at least once every 3 months per ISTC-3510, or as modified by a specific cold shutdown or reactor refueling justification which is allowed by ISTC-3521. Manual valves are exercised every 2 years as required by 10 CFR 50.55a(b)(3)(vi).

LT - Leak test shall be performed per ISTC-3600 or as modified by specific relief request.

CV - Check valves shall be exercised at least once every 3 months per ISTC-3510 or as modified by a specific cold shutdown or reactor refueling justification which is allowed by ISTC-3522.

VP - Valve position indication shall be verified per ISTC-3700 or as modified by a specific relief request.

SP - Set points of safety and relief valves shall be tested per ISTC, Appendix I or as modified by a specific relief request.

FS - Valves with fail-safe actuators shall be tested by observing the operation of the valves upon loss of the actuator power at least once every 3 months per ISTC-3560 or as modified by a specific cold shutdown or reactor refueling justification.

9) Test Position - The following abbreviations are used to describe normal valve positions to which the valves are tested (including the valve safety position):

O - Open
C - Closed
OC - Open and Closed
P - Partially Stroked

10) Test Frequency - The following abbreviations are used to describe the test frequency:

03 - Nominally every three months

18 - Nominally every 18 months

24 - Every 24 months

60 - Every 60 months

120 - Every 120 months

CS - Every cold shutdown but not more often than every three months

RR - Every reactor refueling outage

OPB - Per the test frequency determined by the Appendix J, Option B program for leak testing containment isolation valves

11) Relief Request Reference

Notes (NOTE n) and technical positions (TP-n) are also listed in this column.

12) Cold Shutdown Justification Reference

13) Reactor Refueling Justification Reference

14) Non-Code Alternative Test Reference

15) Function - A brief description of the function of the valve.

NORTH ANNA UNIT 1
FOURTH INSERVICE TESTING INTERVAL
VALVE INSERVICE TEST TABLE

VALVE NUMBER	DRAWING NUMBER	SHEET	COOR	VALVE TYPE	VALVE SIZE	ASME CLASS	ISTC CAT	ISO VALVE TYPE	TEST TYPE	TEST POS	TEST FREQ	RE REQ V-	CS JUST CSV-	RR JUST RRV-	NC ALT TEST VNC-
1-BD-TV-100A	11715-CBM-098A	2 OF 5	C5	AO GLOBE	3	2	A	CIV	EV	C	03				
									FS	C	03				
									LT	C	OPB				
									ST	C	03				
									VP	OC	24				
	"A" STEAM GENERATOR BLOWDOWN, OUTSIDE CONTAINMENT ISOLATION VALVE														
1-BD-TV-100B	11715-CBM-098A	2 OF 5	C6	AO GLOBE	3	2	A	CIV	EV	C	03				
									FS	C	03				
									LT	C	OPB				
									ST	C	03				
									VP	OC	24				
	"A" STEAM GENERATOR BLOWDOWN, INSIDE CONTAINMENT ISOLATION VALVE														
1-BD-TV-100C	11715-CBM-098A	3 OF 5	C5	AO GLOBE	3	2	A	CIV	EV	C	03				
									FS	C	03				
									LT	C	OPB				
									ST	C	03				
									VP	OC	24				
	"B" STEAM GENERATOR BLOWDOWN, OUTSIDE CONTAINMENT ISOLATION VALVE														
1-BD-TV-100D	11715-CBM-098A	3 OF 5	C6	AO GLOBE	3	2	A	CIV	EV	C	03				
									FS	C	03				
									LT	C	OPB				
									ST	C	03				
									VP	OC	24				
	"B" STEAM GENERATOR BLOWDOWN, INSIDE CONTAINMENT ISOLATION VALVE														
1-BD-TV-100E	11715-CBM-098A	4 OF 5	C5	AO GLOBE	3	2	A	CIV	EV	C	03				
									FS	C	03				
									LT	C	OPB				
									ST	C	03				
									VP	OC	24				

NORTH ANNA UNIT 1
FOURTH INSERVICE TESTING INTERVAL
VALVE INSERVICE TEST TABLE

VALVE NUMBER	DRAWING NUMBER	SHEET	COOR	VALVE TYPE	VALVE SIZE	ASME CLASS	ISTC CAT	ISO VALVE TYPE	TEST TYPE	TEST POS	TEST FREQ	RE REQ V-	CS JUST CSV-	RR JUST RRV-	NC ALT TEST VNC-
	"C" STEAM GENERATOR BLOWDOWN, OUTSIDE CONTAINMENT ISOLATION VALVE														
1-BD-TV-100F	11715-CBM-098A	4 OF 5	C6	AO GLOBE	3	2	A	CIV	EV	C	03				
									FS	C	03				
									LT	C	OPB				
									ST	C	03				
									VP	OC	24				
	"C" STEAM GENERATOR BLOWDOWN, INSIDE CONTAINMENT ISOLATION VALVE														
1-BD-TV-100G	11715-CBM-098A	2 OF 5	C6	AO GLOBE	3	2	B		EV	C	03				
									FS	C	03				
									ST	C	03				
									VP	OC	24				
	"A" STEAM GENERATOR BLOWDOWN, INSIDE CONTAINMENT ISOLATION VALVE														
1-BD-TV-100H	11715-CBM-098A	3 OF 5	C6	AO GLOBE	3	2	B		EV	C	03				
									FS	C	03				
									ST	C	03				
									VP	OC	24				
	"B" STEAM GENERATOR BLOWDOWN, INSIDE CONTAINMENT ISOLATION VALVE														
1-BD-TV-100J	11715-CBM-098A	4 OF 5	C6	AO GLOBE	3	2	B		EV	C	03				
									FS	C	03				
									ST	C	03				
									VP	OC	24				
	"C" STEAM GENERATOR BLOWDOWN, INSIDE CONTAINMENT ISOLATION VALVE														

NORTH ANNA UNIT 1
FOURTH INSERVICE TESTING INTERVAL
VALVE INSERVICE TEST TABLE

VALVE NUMBER	DRAWING NUMBER	SHEET	COOR	VALVE TYPE	VALVE SIZE	ASME CLASS	ISTC CAT	ISO VALVE TYPE	TEST TYPE	TEST POS	TEST FREQ	RE REQ V-	CS JUST CSV-	RR JUST RRV-	NC ALT TEST VNC-
1-CC-024	11715-CBM-079A	1 OF 3	C5	CHECK VALVE	18	3	C		CV	C	03				
										O	03				
	"A" COMPONENT COOLING PUMP DISCHARGE CHECK VALVE														
1-CC-047	11715-CBM-079A	1 OF 3	B5	CHECK VALVE	18	3	C		CV	C	03				
										O	03				
	"B" COMPONENT COOLING PUMP DISCHARGE CHECK VALVE														
1-CC-084	11715-CBM-079B	2 OF 5	F7	CHECK VALVE	6	2	AC	CIV	CV	C	RR			1	
										O	RR	TP-01		1	
									LT	C	OPB				
	CC SUPPLY TO "A" RC PUMP LO, STATOR SHROUD & THERM BARRIER COOLERS, IN CONT ISOL CHECK VLV														
1-CC-111	11715-CBM-079B	2 OF 5	C7	CHECK VALVE	3	3	C		CV	C	RR			19	
										O	RR	TP-01		19	
	CC SUPPLY TO "A" RC PUMP THERMAL BARRIER COOLER CHECK														
1-CC-119	11715-CBM-079B	3 OF 5	F7	CHECK VALVE	6	2	AC	CIV	CV	C	RR			1	
										O	RR	TP-01		1	
									LT	C	OPB				
	CC SUPPLY TO "B" RC PUMP LO, STATOR SHROUD & THERM BARRIER COOLERS, IN CONT ISOL CHECK VLV														
1-CC-146	11715-CBM-079B	3 OF 5	C7	CHECK VALVE	3	3	C		CV	C	RR			19	
										O	RR	TP-01		19	
	CC SUPPLY TO "B" RC PUMP THERMAL BARRIER COOLER CHECK														
1-CC-154	11715-CBM-079B	4 OF 5	F7	CHECK VALVE	6	2	AC	CIV	CV	C	RR			1	
										O	RR	TP-01		1	
									LT	C	OPB				
	CC SUPPLY TO "C" RC PUMP LO, STATOR SHROUD & THERM BARRIER COOLERS, IN CONT ISOL CHECK VLV														
1-CC-181	11715-CBM-079B	4 OF 5	C7	CHECK VALVE	3	3	C		CV	C	RR			19	
										O	RR	TP-01		19	

NORTH ANNA UNIT 1
FOURTH INSERVICE TESTING INTERVAL
VALVE INSERVICE TEST TABLE

VALVE NUMBER	DRAWING NUMBER	SHEET	COOR	VALVE TYPE	VALVE SIZE	ASME CLASS	ISTC CAT	ISO VALVE TYPE	TEST TYPE	TEST POS	TEST FREQ	RE REQ V-	CS JUST CSV-	RR JUST RRV-	NC ALT TEST VNC-
	CC SUPPLY TO "C" RC PUMP THERMAL BARRIER COOLER CHECK														
1-CC-193	11715-CBM-079B	1 OF 5	F7	CHECK VALVE	18	2	AC	CIV	CV	C	RR			21	
										O	RR			21	
									LT	C	OPB				
	CC SUPPLY TO "A" RHR HEAT EXCHANGER														
1-CC-198	11715-CBM-079B	1 OF 5	F7	CHECK VALVE	18	2	AC	CIV	CV	C	RR			21	
										O	RR			21	
									LT	C	OPB				
	CC SUPPLY TO "B" RHR HEAT EXCHANGER														
1-CC-546	11715-CBM-079D	4 OF 5	E8	CHECK VALVE	6	2	AC	CIV	CV	C	RR			18	
										O	RR	TP-01		18	
									LT	C	OPB				
	CC SUPPLY TO "A" RECIRC AIR COOLING COILS, OUTSIDE CONTAINMENT ISOLATION CHECK VALVE														
1-CC-559	11715-CBM-079D	4 OF 5	D8	CHECK VALVE	6	2	AC	CIV	CV	C	RR			18	
										O	RR	TP-01		18	
									LT	C	OPB				
	CC SUPPLY TO "B" RECIRC AIR COOLING COILS, OUTSIDE CONTAINMENT ISOLATION CHECK VALVE														
1-CC-572	11715-CBM-079D	4 OF 5	C8	CHECK VALVE	6	2	AC	CIV	CV	C	RR			18	
										O	RR	TP-01		18	
									LT	C	OPB				
	CC SUPPLY TO "C" RECIRC AIR COOLING COILS, OUTSIDE CONTAINMENT ISOLATION CHECK VALVE														
1-CC-MOV-100A	11715-CBM-079B	1 OF 5	A3	MO BFLY	18	3	B		EV	O	03				
									ST	O	03				
									VP	OC	24				
	COMPONENT COOLING WATER RETURN THROTTLING VALVE FROM "A" RHR HEAT EXCHANGER														
1-CC-MOV-100B	11715-CBM-079B	1 OF 5	B3	MO BFLY	18	3	B		EV	O	03				
									ST	O	03				

NORTH ANNA UNIT 1
FOURTH INSERVICE TESTING INTERVAL
VALVE INSERVICE TEST TABLE

VALVE NUMBER	DRAWING NUMBER	SHEET	COOR	VALVE TYPE	VALVE SIZE	ASME CLASS	ISTC CAT	ISO VALVE TYPE	TEST TYPE	TEST POS	TEST FREQ	RE REQ V-	CS JUST CSV-	RR JUST RRV-	NC ALT TEST VNC-
1-CC-MOV-100B	11715-CBM-079B	1 OF 5	B3	MO BFLY	18	3	B		VP	OC	24				
	COMPONENT COOLING WATER RETURN THROTTLING VALVE FROM "B" RHR HEAT EXCHANGER														
1-CC-RV-104A	11715-CBM-079D	4 OF 5	E5	RELIEF VALVE	0.75	NC	C		SP	O	120	NOTE 1			5
	CONTAINMENT PENETRATION 11 RELIEF VALVE - CC SUPPLY TO RECIRC AIR COOLERS														
1-CC-RV-104B	11715-CBM-079D	4 OF 5	D5	RELIEF VALVE	0.75	NC	C		SP	O	120	NOTE 1			5
	CONTAINMENT PENETRATION 10 RELIEF VALVE - CC SUPPLY TO RECIRC AIR COOLER														
1-CC-RV-104C	11715-CBM-079D	4 OF 5	C5	RELIEF VALVE	0.75	NC	C		SP	O	120	NOTE 1			5
	CONTAINMENT PENETRATION 9 RELIEF VALVE - CC SUPPLY TO RECIRC AIR COOLER														
1-CC-RV-124A	11715-CBM-079B	2 OF 5	F6	RELIEF VALVE	3	3	C		SP	O	120	3, NOTE 1			
	COMPONENT COOLING WATER TO REACTOR SHROUD HEAT EXCHANGER RELIEF VALVE														
1-CC-RV-124B	11715-CBM-079B	3 OF 5	F6	RELIEF VALVE	3	3	C		SP	O	120	3, NOTE 1			
	COMPONENT COOLING WATER TO REACTOR SHROUD HEAT EXCHANGER RELIEF VALVE														
1-CC-RV-124C	11715-CBM-079B	4 OF 5	F6	RELIEF VALVE	3	3	C		SP	O	120	3, NOTE 1			
	COMPONENT COOLING WATER TO REACTOR SHROUD HEAT EXCHANGER RELIEF VALVE														
1-CC-RV-125A	11715-CBM-079B	2 OF 5	C6	RELIEF VALVE	0.75	3	C		SP	O	120	3, NOTE 1			
	CC SUPPLY TO "A" RC PUMP THERMAL BARRIER RELIEF VALVE														
1-CC-RV-125B	11715-CBM-079B	3 OF 5	C6	RELIEF VALVE	0.75	3	C		SP	O	120	3, NOTE 1			
	CC SUPPLY TO "B" RC PUMP THERMAL BARRIER RELIEF VALVE														
1-CC-RV-125C	11715-CBM-079B	4 OF 5	C6	RELIEF VALVE	0.75	3	C		SP	O	120	3, NOTE 1			
	CC SUPPLY TO "C" RC PUMP THERMAL BARRIER RELIEF VALVE														
1-CC-RV-126	11715-CBM-079B	5 OF 5	C6	RELIEF VALVE	1	3	C		SP	O	120	3, NOTE 1			

NORTH ANNA UNIT 1
FOURTH INSERVICE TESTING INTERVAL
VALVE INSERVICE TEST TABLE

VALVE NUMBER	DRAWING NUMBER	SHEET	COOR	VALVE TYPE	VALVE SIZE	ASME CLASS	ISTC CAT	ISO VALVE TYPE	TEST TYPE	TEST POS	TEST FREQ	RE REQ V-	CS JUST CSV-	RR JUST RRV-	NC ALT TEST VNC-
	EXCESS LETDOWN HEAT EXCHANGER COMPONENT COOLING WATER PENETRATION 1 RELIEF VALVE														
1-CC-RV-128A	11715-CBM-079B	1 OF 5	E3	RELIEF VALVE	0.75	3	C		SP	O	120	3, NOTE 1			
	"A" RHR HEAT EXCHANGER COMPONENT COOLING RELIEF VALVE														
1-CC-RV-128B	11715-CBM-079B	1 OF 5	D3	RELIEF VALVE	0.75	3	C		SP	O	120	3, NOTE 1			
	"B" RHR HEAT EXCHANGER COMPONENT COOLING RELIEF VALVE														
1-CC-RV-131A	11715-CBM-079B	5 OF 5	C4	RELIEF VALVE	0.75	3	C		SP	O	120	3, NOTE 1			
	RHR PUMP SEAL COOLER RELIEF VALVE														
1-CC-RV-131B	11715-CBM-079B	5 OF 5	B4	RELIEF VALVE	0.75	3	C		SP	O	120	3, NOTE 1			
	RHR PUMP SEAL COOLER RELIEF VALVE														
1-CC-TV-100A	11715-CBM-079D	4 OF 5	E4	AO BFLY	6	2	A	CIV	EV	C	03				
									FS	C	03				
									LT	C	OPB				
									ST	C	03				
									VP	OC	24				
	CC RETURN FROM "A" RECIRC AIR COOLING COILS, OUTSIDE CONTAINMENT ISOLATION VALVE														
1-CC-TV-100B	11715-CBM-079D	4 OF 5	D4	AO BFLY	6	2	A	CIV	EV	C	03				
									FS	C	03				
									LT	C	OPB				
									ST	C	03				
									VP	OC	24				
	CC RETURN FROM "B" RECIRC AIR COOLING COILS, OUTSIDE CONTAINMENT ISOLATION VALVE														
1-CC-TV-100C	11715-CBM-079D	4 OF 5	C4	AO BFLY	6	2	A	CIV	EV	C	03				
									FS	C	03				
									LT	C	OPB				
									ST	C	03				
									VP	OC	24				

NORTH ANNA UNIT 1
FOURTH INSERVICE TESTING INTERVAL
VALVE INSERVICE TEST TABLE

VALVE NUMBER	DRAWING NUMBER	SHEET	COOR	VALVE TYPE	VALVE SIZE	ASME CLASS	ISTC CAT	ISO VALVE TYPE	TEST TYPE	TEST POS	TEST FREQ	RE REQ V-	CS JUST CSV-	RR JUST RRV-	NC ALT TEST VNC-
	CC RETURN FROM "C" RECIRC AIR COOLING COILS, OUTSIDE CONTAINMENT ISOLATION VALVE														
1-CC-TV-101A	11715-CBM-079B	1 OF 5	D7	AO GLOBE	4	2	A	CIV	EV	C	CS		1		
									FS	C	CS		1		
									LT	C	OPB				
									ST	C	CS		1		
									VP	OC	24				
	CC RETURN FROM REACTOR COOLANT PUMP THERMAL BARRIERS, OUTSIDE CONTAINMENT ISOLATION VALVE														
1-CC-TV-101B	11715-CBM-079B	1 OF 5	D6	AO GLOBE	4	2	A	CIV	EV	C	CS		1		
									FS	C	CS		1		
									LT	C	OPB				
									ST	C	CS		1		
									VP	OC	24				
	CC RETURN FROM REACTOR COOLANT PUMP THERMAL BARRIERS, INSIDE CONTAINMENT ISOLATION VALVE														
1-CC-TV-102A	11715-CBM-079B	4 OF 5	A5	AO BFLY	8	2	A	CIV	EV	C	CS		1		
									FS	C	CS		1		
									LT	C	OPB				
									ST	C	CS		1		
									VP	OC	24				
	CC RETURN FROM "C" RC PUMP LO,STATOR & SHROUD COOLERS, OUTSIDE CONTAINMENT ISOLATION VALVE														
1-CC-TV-102B	11715-CBM-079B	4 OF 5	A3	AO BFLY	8	2	A	CIV	EV	C	CS		1		
									FS	C	CS		1		
									LT	C	OPB				
									ST	C	CS		1		
									VP	OC	24				
	CC RETURN FROM "C" RC PUMP LO,STATOR & SHROUD COOLERS, INSIDE CONTAINMENT ISOLATION VALVE														
1-CC-TV-102C	11715-CBM-079B	3 OF 5	A5	AO BFLY	8	2	A	CIV	EV	C	CS		1		
									FS	C	CS		1		
									LT	C	OPB				

NORTH ANNA UNIT 1
FOURTH INSERVICE TESTING INTERVAL
VALVE INSERVICE TEST TABLE

VALVE NUMBER	DRAWING NUMBER	SHEET	COOR	VALVE TYPE	VALVE SIZE	ASME CLASS	ISTC CAT	ISO VALVE TYPE	TEST TYPE	TEST POS	TEST FREQ	RE REQ V-	CS JUST CSV-	RR JUST RRV-	NC ALT TEST VNC-
1-CC-TV-102C	11715-CBM-079B	3 OF 5	A5	AO BFLY	8	2	A	CIV	ST	C	CS		1		
									VP	OC	24				
	CC RETURN FROM "B" RC PUMP LO,STATOR & SHROUD COOLERS, OUTSIDE CONTAINMENT ISOLATION VALVE														
1-CC-TV-102D	11715-CBM-079B	3 OF 5	A3	AO BFLY	8	2	A	CIV	EV	C	CS		1		
									FS	C	CS		1		
									LT	C	OPB				
									ST	C	CS		1		
									VP	OC	24				
	CC RETURN FROM "B" RC PUMP LO,STATOR & SHROUD COOLERS, INSIDE CONTAINMENT ISOLATION VALVE														
1-CC-TV-102E	11715-CBM-079B	2 OF 5	A5	AO BFLY	8	2	A	CIV	EV	C	CS		1		
									FS	C	CS		1		
									LT	C	OPB				
									ST	C	CS		1		
									VP	OC	24				
	CC RETURN FROM "A" RC PUMP LO,STATOR & SHROUD COOLERS, OUTSIDE CONTAINMENT ISOLATION VALVE														
1-CC-TV-102F	11715-CBM-079B	2 OF 5	A3	AO BFLY	8	2	A	CIV	EV	C	CS		1		
									FS	C	CS		1		
									LT	C	OPB				
									ST	C	CS		1		
									VP	OC	24				
	CC RETURN FROM "A" RC PUMP LO,STATOR & SHROUD COOLERS, INSIDE CONTAINMENT ISOLATION VALVE														
1-CC-TV-103A	11715-CBM-079B	1 OF 5	A7	AO BFLY	18	2	A	CIV	EV	C	03				
										O	03				
									FS	C	03				
									LT	C	OPB				
									ST	C	03				
										O	03				
									VP	OC	24				

NORTH ANNA UNIT 1
FOURTH INSERVICE TESTING INTERVAL
VALVE INSERVICE TEST TABLE

VALVE NUMBER	DRAWING NUMBER	SHEET	COOR	VALVE TYPE	VALVE SIZE	ASME CLASS	ISTC CAT	ISO VALVE TYPE	TEST TYPE	TEST POS	TEST FREQ	RE REQ V-	CS JUST CSV-	RR JUST RRV-	NC ALT TEST VNC-
	CC RETURN FROM "A" RHR HEAT EXCHANGER, OUTSIDE CONTAINMENT ISOLATION VALVE														
1-CC-TV-103B	11715-CBM-079B	1 OF 5	B7	AO BFLY	18	2	A	CIV	EV	C	03				
										O	03				
									FS	C	03				
									LT	C	OPB				
									ST	C	03				
										O	03				
									VP	OC	24				
	CC RETURN FROM "B" RHR HEAT EXCHANGER, OUTSIDE CONTAINMENT ISOLATION VALVE														
1-CC-TV-104A	11715-CBM-079B	2 OF 5	E8	AO BFLY	8	2	A	CIV	EV	C	CS		1		
									FS	C	CS		1		
									LT	C	OPB				
									ST	C	CS		1		
									VP	OC	24				
	CC SUPPLY TO "A" RC PUMP LO, STATOR, SHROUD & THERM BARRIER COOLERS, OUTSIDE CONT ISOL VLV														
1-CC-TV-104B	11715-CBM-079B	3 OF 5	E8	AO BFLY	8	2	A	CIV	EV	C	CS		1		
									FS	C	CS		1		
									LT	C	OPB				
									ST	C	CS		1		
									VP	OC	24				
	CC SUPPLY TO "B" RC PUMP LO, STATOR, SHROUD & THERM BARRIER COOLERS, OUTSIDE CONT ISOL VLV														
1-CC-TV-104C	11715-CBM-079B	4 OF 5	E8	AO BFLY	8	2	A	CIV	EV	C	CS		1		
									FS	C	CS		1		
									LT	C	OPB				
									ST	C	CS		1		
									VP	OC	24				
	CC SUPPLY TO "C" RC PUMP LO, STATOR, SHROUD & THERM BARRIER COOLERS, OUTSIDE CONT ISOL VLV														
1-CC-TV-105A	11715-CBM-079D	4 OF 5	E4	AO BFLY	6	2	A	CIV	EV	C	03				

NORTH ANNA UNIT 1
FOURTH INSERVICE TESTING INTERVAL
VALVE INSERVICE TEST TABLE

VALVE NUMBER	DRAWING NUMBER	SHEET	COOR	VALVE TYPE	VALVE SIZE	ASME CLASS	ISTC CAT	ISO VALVE TYPE	TEST TYPE	TEST POS	TEST FREQ	RE REQ V-	CS JUST CSV-	RR JUST RRV-	NC ALT TEST VNC-
1-CC-TV-105A	11715-CBM-079D	4 OF 5	E4	AO BFLY	6	2	A	CIV	FS	C	03				
									LT	C	OPB				
									ST	C	03				
									VP	OC	24				
	CC RETURN FROM "A" RECIRC AIR COOLING COILS, INSIDE CONTAINMENT ISOLATION VALVE														
1-CC-TV-105B	11715-CBM-079D	4 OF 5	D4	AO BFLY	6	2	A	CIV	EV	C	03				
									FS	C	03				
									LT	C	OPB				
									ST	C	03				
									VP	OC	24				
	CC RETURN FROM "B" RECIRC AIR COOLING COILS, INSIDE CONTAINMENT ISOLATION VALVE														
1-CC-TV-105C	11715-CBM-079D	4 OF 5	C4	AO BFLY	6	2	A	CIV	EV	C	03				
									FS	C	03				
									LT	C	OPB				
									ST	C	03				
									VP	OC	24				
	CC RETURN FROM "C" RECIRC AIR COOLING COILS, INSIDE CONTAINMENT ISOLATION VALVE														

NORTH ANNA UNIT 1
FOURTH INSERVICE TESTING INTERVAL
VALVE INSERVICE TEST TABLE

VALVE NUMBER	DRAWING NUMBER	SHEET	COOR	VALVE TYPE	VALVE SIZE	ASME CLASS	ISTC CAT	ISO VALVE TYPE	TEST TYPE	TEST POS	TEST FREQ	RE REQ V-	CS JUST CSV-	RR JUST RRV-	NC ALT TEST VNC-
1-CD-161	11715-CBB-040C	1 OF 3	E6	CHECK VALVE	3	3	C		CV	C O	RR 03			30	
	CONTROL ROOM CHILLED WATER SYSTEM PUMP DISCHARGE CHECK VALVE														
1-CD-182	11715-CBB-040C	1 OF 3	D6	CHECK VALVE	3	3	C		CV	C O	RR 03			30	
	CONTROL ROOM CHILLED WATER SYSTEM PUMP DISCHARGE CHECK VALVE														
1-CD-209	11715-CBB-040C	1 OF 3	C6	CHECK VALVE	3	3	C		CV	C O	RR 03			30	
	CONTROL ROOM CHILLED WATER SYSTEM PUMP DISCHARGE CHECK VALVE														

NORTH ANNA UNIT 1
FOURTH INSERVICE TESTING INTERVAL
VALVE INSERVICE TEST TABLE

VALVE NUMBER	DRAWING NUMBER	SHEET	COOR	VALVE TYPE	VALVE SIZE	ASME CLASS	ISTC CAT	ISO VALVE TYPE	TEST TYPE	TEST POS	TEST FREQ	RE REQ V-	CS JUST CSV-	RR JUST RRV-	NC ALT TEST VNC-
1-CH-084	11715-CBM-095A	1 OF 4	C4	CHECK VALVE	2	3	C		CV	C	CS		27		
										O	CS		27		
	"A" BORIC ACID TRANSFER PUMP DISCHARGE CHECK VALVE														
1-CH-102	11715-CBM-095A	1 OF 4	C5	CHECK VALVE	2	3	C		CV	C	CS		27		
										O	CS		27		
	"B" BORIC ACID TRANSFER PUMP DISCHARGE CHECK VALVE														
1-CH-215	11715-CBM-095B	1 OF 2	B6	CHECK VALVE	4	2	AC		CV	C	RR			22	
										O	03				
									LT	C	24				
	CHARGING PUMP SUPPLY FROM VOLUME CONTROL TANK ISOLATION VALVE														
1-CH-238	11715-CBM-095B	1 OF 2	B5	CHECK VALVE	2	2	C		CV	C	RR			31	
										O	RR			31	
	MAIN EMERGENCY BORATION LINE TO CHARGING PUMP SUCTION CHECK VALVE														
1-CH-240	11715-CBM-095B	1 OF 2	C3	CHECK VALVE	1	3	C		CV	C	RR			31	
										O	RR			31	
	ALTERNATE EMERGENCY BORATION LINE CHECK VALVE														
1-CH-241	11715-CBM-095B	1 OF 2	B4	MAN DIAPHRAGM	1	3	B		EV	O	24				
	ALTERNATE EMERGENCY BORATION LINE MANUAL VALVE														
1-CH-242	11715-CBM-095B	1 OF 2	B5	CHECK VALVE	1	2	C		CV	C	RR			31	
										O	RR			31	
	ALTERNATE EMERGENCY BORATION LINE TO CHARGING PUMP SUCTION CHECK VALVE														
1-CH-252	11715-CBM-095B	2 OF 2	D7	CHECK VALVE	2	2	C		CV	C	RR			34	
										O	RR			34	
	"A" CHARGING PUMP DISCHARGE RECIRC LINE CHECK VALVE														
1-CH-254	11715-CBM-095B	2 OF 2	D7	CHECK VALVE	3	2	C		CV	C	03				
										O	RR			16	

NORTH ANNA UNIT 1
FOURTH INSERVICE TESTING INTERVAL
VALVE INSERVICE TEST TABLE

VALVE NUMBER	DRAWING NUMBER	SHEET	COOR	VALVE TYPE	VALVE SIZE	ASME CLASS	ISTC CAT	ISO VALVE TYPE	TEST TYPE	TEST POS	TEST FREQ	RE REQ V-	CS JUST CSV-	RR JUST RRV-	NC ALT TEST VNC-
	"A" CHARGING PUMP DISCHARGE CHECK VALVE														
1-CH-264	11715-CBM-095B	2 OF 2	D6	CHECK VALVE	2	2	C		CV	C	RR			34	
										O	RR			34	
	"B" CHARGING PUMP DISCHARGE RECIRC LINE CHECK VALVE														
1-CH-267	11715-CBM-095B	2 OF 2	D6	CHECK VALVE	3	2	C		CV	C	03				
										O	RR			16	
	"B" CHARGING PUMP DISCHARGE CHECK VALVE														
1-CH-277	11715-CBM-095B	2 OF 2	D4	CHECK VALVE	2	2	C		CV	C	RR			34	
										O	RR			34	
	"C" CHARGING PUMP DISCHARGE RECIRC LINE CHECK VALVE														
1-CH-279	11715-CBM-095B	2 OF 2	D4	CHECK VALVE	3	2	C		CV	C	03				
										O	RR			16	
	"C" CHARGING PUMP DISCHARGE CHECK VALVE														
1-CH-322	11715-CBM-095C	1 OF 2	D4	CHECK VALVE	3	1	C		CV	C	RR			2	
										O	RR	TP-01		2	
	MAIN CHARGING SUPPLY HEADER, INSIDE CONTAINMENT ISOLATION CHECK VALVE														
1-CH-330	11715-CBM-095C	1 OF 2	A6	CHECK VALVE	2	1	C		CV	C	RR			2	
										O	RR			2	
	CHARGING SUPPLY TO LOOP FILL HEADER, INSIDE CONTAINMENT ISOLATION CHECK VALVE														
1-CH-336	11715-CBM-095C	2 OF 2	B8	CHECK VALVE	2	1	C		CV	C	RR			2	
										O	RR	TP-01		2	
	"A" RC PUMP SEAL WATER SUPPLY, INSIDE CONTAINMENT ISOLATION CHECK VALVE														
1-CH-358	11715-CBM-095C	2 OF 2	B7	CHECK VALVE	2	1	C		CV	C	RR			2	
										O	RR	TP-01		2	

NORTH ANNA UNIT 1
FOURTH INSERVICE TESTING INTERVAL
VALVE INSERVICE TEST TABLE

VALVE NUMBER	DRAWING NUMBER	SHEET	COOR	VALVE TYPE	VALVE SIZE	ASME CLASS	ISTC CAT	ISO VALVE TYPE	TEST TYPE	TEST POS	TEST FREQ	RE REQ V-	CS JUST CSV-	RR JUST RRV-	NC ALT TEST VNC-
	"B" RC PUMP SEAL WATER SUPPLY, INSIDE CONTAINMENT ISOLATION CHECK VALVE														
1-CH-380	11715-CBM-095C	2 OF 2	B5	CHECK VALVE	2	1	C		CV	C	RR			2	
										O	RR	TP-01		2	
	"C" RC PUMP SEAL WATER SUPPLY, INSIDE CONTAINMENT ISOLATION CHECK VALVE														
1-CH-402	11715-CBM-095C	2 OF 2	F4	CHECK VALVE	0.75	2	AC	CIV	CV	C	RR			2	
										O	RR			2	
									LT	C	OPB				
	RC PUMP SEAL WATER RETURN, INSIDE CONTAINMENT ISOLATION CHECK VALVE														
1-CH-649	11715-CBM-095B	1 OF 2	B6	CHECK VALVE	2	2	AC		CV	C	RR			22	
										O	RR			22	
									LT	C	24				
	CHARGING PUMP RECIRC AND RCP SEAL WATER RETURN LINE ISOLATION CHECK VALVE														
1-CH-FCV-1113A	11715-CBM-095B	1 OF 2	C3	AO GLOBE	1	3	B		EV	O	03				
									FS	O	03				
									ST	O	NA	2			
									VP	OC	24				
	ALTERNATE EMERGENCY BORATION LINE FLOW CONTROL VALVE														
1-CH-FCV-1114A	11715-CBM-095B	1 OF 2	D4	AO DIAPHRAGM	2	NC	B		EV	C	03				
									FS	C	03				
									ST	C	NA	2			
									VP	OC	24				
	PRIMARY GRADE WATER FLOW CONTROL VALVE														
1-CH-FCV-1160	11715-CBM-095C	1 OF 2	A4	AO GLOBE	2	2	E		VP	OC	24				
	CHARGING FLOW CONTROL TO LOOP FILL HEADER, OUTSIDE CONTAINMENT ISOLATION VALVE														
1-CH-LCV-1460A	11715-CBM-095C	1 OF 2	F7	AO GLOBE	3	1	B		EV	C	CS		3		

NORTH ANNA UNIT 1
FOURTH INSERVICE TESTING INTERVAL
VALVE INSERVICE TEST TABLE

VALVE NUMBER	DRAWING NUMBER	SHEET	COOR	VALVE TYPE	VALVE SIZE	ASME CLASS	ISTC CAT	ISO VALVE TYPE	TEST TYPE	TEST POS	TEST FREQ	RE REQ V-	CS JUST CSV-	RR JUST RRV-	NC ALT TEST VNC-
1-CH-LCV-1460A	11715-CBM-095C	1 OF 2	F7	AO GLOBE	3	1	B		FS	C	CS		3		
									ST	C	CS		3		
									VP	OC	24				
	LETDOWN ISOLATION VALVE														
1-CH-LCV-1460B	11715-CBM-095C	1 OF 2	F7	AO GLOBE	3	1	B		EV	C	CS		3		
									FS	C	CS		3		
									ST	C	CS		3		
									VP	OC	24				
	LETDOWN ISOLATION VALVE														
1-CH-MOV-1115B	11715-CBM-095B	2 OF 2	B8	MO GATE	8	2	A		EV	C	CS		4		
										O	CS		4		
									LT	C	24	1			
									ST	C	CS		4		
										O	CS		4		
									VP	OC	24				
	CHARGING PUMP SUPPLY ISOLATION VALVE FROM REFUELING WATER STORAGE TANK														
1-CH-MOV-1115C	11715-CBM-095B	1 OF 2	C6	MO GATE	4	2	B		EV	C	CS		4		
									ST	C	CS		4		
									VP	OC	24				
	CHARGING PUMP SUPPLY ISOLATION FROM VOLUME CONTROL TANK														
1-CH-MOV-1115D	11715-CBM-095B	2 OF 2	B8	MO GATE	8	2	A		EV	C	CS		4		
										O	CS		4		
									LT	C	24	1			
									ST	C	CS		4		
										O	CS		4		
									VP	OC	24				
	CHARGING PUMP SUPPLY ISOLATION VALVE FROM REFUELING WATER STORAGE TANK														
1-CH-MOV-1115E	11715-CBM-095B	1 OF 2	C6	MO GATE	4	2	B		EV	C	CS		4		
									ST	C	CS		4		

NORTH ANNA UNIT 1
FOURTH INSERVICE TESTING INTERVAL
VALVE INSERVICE TEST TABLE

VALVE NUMBER	DRAWING NUMBER	SHEET	COOR	VALVE TYPE	VALVE SIZE	ASME CLASS	ISTC CAT	ISO VALVE TYPE	TEST TYPE	TEST POS	TEST FREQ	RE REQ V-	CS JUST CSV-	RR JUST RRV-	NC ALT TEST VNC-
1-CH-MOV-1115E	11715-CBM-095B	1 OF 2	C6	MO GATE	4	2	B		VP	OC	24				
	CHARGING PUMP SUPPLY ISOLATION VALVE FROM VOLUME CONTROL TANK														
1-CH-MOV-1267A	11715-CBM-095B	2 OF 2	C7	MO GATE	6	2	E		VP	OC	24				
	"A" CHARGING PUMP SUCTION ISOLATION FROM RWST AND VCT														
1-CH-MOV-1267B	11715-CBM-095B	2 OF 2	C7	MO GATE	6	2	E		VP	OC	24				
	"A" CHARGING PUMP SUCTION ISOLATION FROM LHSI														
1-CH-MOV-1269A	11715-CBM-095B	2 OF 2	C5	MO GATE	6	2	E		VP	OC	24				
	"B" CHARGING PUMP SUCTION ISOLATION FROM RWST AND VCT														
1-CH-MOV-1269B	11715-CBM-095B	2 OF 2	C5	MO GATE	6	2	E		VP	OC	24				
	"B" CHARGING PUMP SUCTION ISOLATION FROM LHSI														
1-CH-MOV-1270A	11715-CBM-095B	2 OF 2	C3	MO GATE	6	2	E		VP	OC	24				
	"C" CHARGING PUMP SUCTION ISOLATION FROM RWST AND VCT														
1-CH-MOV-1270B	11715-CBM-095B	2 OF 2	C3	MO GATE	6	2	E		VP	OC	24				
	"C" CHARGING PUMP SUCTION ISOLATION FROM LHSI														
1-CH-MOV-1275A	11715-CBM-095B	2 OF 2	D7	MO GATE	2	2	B		EV	C	03				
										O	03				
									ST	C	03				
										O	03				
									VP	OC	24				
	"A" CHARGING PUMP MINIMUM RECIRCULATION ISOLATION VALVE														
1-CH-MOV-1275B	11715-CBM-095B	2 OF 2	D5	MO GATE	2	2	B		EV	C	03				
										O	03				
									ST	C	03				
										O	03				
									VP	OC	24				
	"B" CHARGING PUMP MINIMUM RECIRCULATION ISOLATION VALVE														

NORTH ANNA UNIT 1
FOURTH INSERVICE TESTING INTERVAL
VALVE INSERVICE TEST TABLE

VALVE NUMBER	DRAWING NUMBER	SHEET	COOR	VALVE TYPE	VALVE SIZE	ASME CLASS	ISTC CAT	ISO VALVE TYPE	TEST TYPE	TEST POS	TEST FREQ	RE REQ V-	CS JUST CSV-	RR JUST RRV-	NC ALT TEST VNC-
1-CH-MOV-1275C	11715-CBM-095B	2 OF 2	D4	MO GATE	2	2	B		EV	C	03				
										O	03				
									ST	C	03				
										O	03				
									VP	OC	24				
	"C" CHARGING PUMP MINIMUM RECIRCULATION ISOLATION VALVE														
1-CH-MOV-1286A	11715-CBM-095B	2 OF 2	E7	MO GATE	3	2	B		EV	C	03				
										O	03				
									ST	C	03				
										O	03				
									VP	OC	24				
	"A" CHARGING PUMP MAIN DISCHARGE ISOLATION VALVE														
1-CH-MOV-1286B	11715-CBM-095B	2 OF 2	E6	MO GATE	3	2	B		EV	C	03				
										O	03				
									ST	C	03				
										O	03				
									VP	OC	24				
	"B" CHARGING PUMP MAIN DISCHARGE ISOLATION VALVE														
1-CH-MOV-1286C	11715-CBM-095B	2 OF 2	E4	MO GATE	3	2	B		EV	C	03				
										O	03				
									ST	C	03				
										O	03				
									VP	OC	24				
	"C" CHARGING PUMP MAIN DISCHARGE ISOLATION VALVE														
1-CH-MOV-1287A	11715-CBM-095B	2 OF 2	D7	MO GATE	3	2	B		EV	C	03				
										O	03				
									ST	C	03				
										O	03				
									VP	OC	24				
	"A" CHARGING PUMP ALTERNATE AND LOOP FILL DISCHARGE ISOLATION VALVE														

NORTH ANNA UNIT 1
FOURTH INSERVICE TESTING INTERVAL
VALVE INSERVICE TEST TABLE

VALVE NUMBER	DRAWING NUMBER	SHEET	COOR	VALVE TYPE	VALVE SIZE	ASME CLASS	ISTC CAT	ISO VALVE TYPE	TEST TYPE	TEST POS	TEST FREQ	RE REQ V-	CS JUST CSV-	RR JUST RRV-	NC ALT TEST VNC-
1-CH-MOV-1287B	11715-CBM-095B	2 OF 2	D6	MO GATE	3	2	B		EV	C	03				
										O	03				
									ST	C	03				
										O	03				
									VP	OC	24				
	"B" CHARGING PUMP ALTERNATE AND LOOP FILL DISCHARGE ISOLATION VALVE														
1-CH-MOV-1287C	11715-CBM-095B	2 OF 2	D4	MO GATE	3	2	B		EV	C	03				
										O	03				
									ST	C	03				
										O	03				
									VP	OC	24				
	"C" CHARGING PUMP ALTERNATE AND LOOP FILL DISCHARGE ISOLATION VALVE														
1-CH-MOV-1289A	11715-CBM-095C	1 OF 2	C4	MO GATE	3	1	B		EV	C	CS		5		
									ST	C	CS		5		
									VP	OC	24				
	MAIN CHARGING HEADER ISOLATION VALVE, OUTSIDE CONTAINMENT ISOLATION VALVE														
1-CH-MOV-1289B	11715-CBM-095C	1 OF 2	B3	MO GATE	3	2	B		EV	C	CS		5		
									ST	C	CS		5		
									VP	OC	24				
	MAIN CHARGING HEADER ISOLATION VALVE, OUTSIDE CONTAINMENT														
1-CH-MOV-1350	11715-CBM-095B	1 OF 2	B5	MO GATE	2	3	B		EV	O	CS		2		
									ST	O	CS		2		
									VP	OC	24				
	EMERGENCY BORATION TO CHARGING PUMP SUCTION														
1-CH-MOV-1373	11715-CBM-095B	1 OF 2	A8	MO GATE	3	2	E		VP	OC	24				
	CHARGING PUMP RECIRCULATION HEADER ISOLATION VALVE														
1-CH-MOV-1380	11715-CBM-095C	2 OF 2	F4	MO GATE	3	2	A	CIV	EV	C	CS		18		

NORTH ANNA UNIT 1
FOURTH INSERVICE TESTING INTERVAL
VALVE INSERVICE TEST TABLE

VALVE NUMBER	DRAWING NUMBER	SHEET	COOR	VALVE TYPE	VALVE SIZE	ASME CLASS	ISTC CAT	ISO VALVE TYPE	TEST TYPE	TEST POS	TEST FREQ	RE REQ V-	CS JUST CSV-	RR JUST RRV-	NC ALT TEST VNC-
1-CH-MOV-1380	11715-CBM-095C	2 OF 2	F4	MO GATE	3	2	A	CIV	LT	C	OPB				
									ST	C	CS		18		
									VP	OC	24				
	REACTOR COOLANT PUMP SEAL WATER RETURN, INSIDE CONTAINMENT ISOLATION VALVE														
1-CH-MOV-1381	11715-CBM-095B	1 OF 2	C8	MO GATE	3	2	A	CIV	EV	C	CS		18		
									LT	C	OPB				
									ST	C	CS		18		
									VP	OC	24				
	REACTOR COOLANT PUMP SEAL WATER RETURN, OUTSIDE CONTAINMENT ISOLATION VALVE														
1-CH-RV-1203	11715-CBM-095C	1 OF 2	F4	RELIEF VALVE	2	2	C		SP	O	120	3			
	LETDOWN RELIEF VLV DOWNSTREAM OF REGEN HX, RV DISCHARGE TO PRESSURIZER RELIEF TANK														
1-CH-RV-1382A	11715-CBM-095C	2 OF 2	F5	RELIEF VALVE	2	2	C		SP	O	120	3			
	CONTAINMENT PENETRATION 19 RELIEF VALVE - RCP SEAL WATER RETURN PIPING														
1-CH-RV-1382B	11715-CBM-095B	1 OF 2	C7	RELIEF VALVE	2	2	C		SP	O	120	3			
	SEAL WATER HEAT EXCHANGER RELIEF VALVE, RV DISCHARGE TO VOLUME CONTROL TANK														
1-CH-TV-1204A	11715-CBM-095C	1 OF 2	E3	AO GLOBE	2	2	A	CIV	EV	C	CS		3		
									FS	C	CS		3		
									LT	C	OPB				
									ST	C	CS		3		
									VP	OC	24				
	LETDOWN CONTROL FROM REGEN HX, INSIDE CONTAINMENT ISOLATION VALVE														
1-CH-TV-1204B	11715-CBM-095A	4 OF 4	C3	AO GLOBE	3	2	A	CIV	EV	C	CS		3		
									FS	C	CS		3		
									LT	C	OPB				
									ST	C	CS		3		
									VP	OC	24				

NORTH ANNA UNIT 1
FOURTH INSERVICE TESTING INTERVAL
VALVE INSERVICE TEST TABLE

VALVE NUMBER	DRAWING NUMBER	SHEET	COOR	VALVE TYPE	VALVE SIZE	ASME CLASS	ISTC CAT	ISO VALVE TYPE	TEST TYPE	TEST POS	TEST FREQ	RE REQ V-	CS JUST CSV-	RR JUST RRV-	NC ALT TEST VNC-
	LETDOWN CONTROL FROM REGEN HX, OUTSIDE CONTAINMENT ISOLATION VALVE														

NORTH ANNA UNIT 1
FOURTH INSERVICE TESTING INTERVAL
VALVE INSERVICE TEST TABLE

VALVE NUMBER	DRAWING NUMBER	SHEET	COOR	VALVE TYPE	VALVE SIZE	ASME CLASS	ISTC CAT	ISO VALVE TYPE	TEST TYPE	TEST POS	TEST FREQ	RE REQ V-	CS JUST CSV-	RR JUST RRV-	NC ALT TEST VNC-
1-CV-004	11715-CBM-092A	2 OF 2	A5	MANUAL GATE	8	2	AE	CIV	LT	C	OPB				
	CONTAINMENT VACUUM EJECTOR SUPPLY, OUTSIDE CONTAINMENT ISOLATION VALVE														
1-CV-TV-100	11715-CBM-092A	2 OF 2	A3	AO BFLY	8	2	AE	CIV	LT	C	OPB				
									VP	OC	24				
	CONTAINMENT VACUUM EJECTOR, INSIDE CONTAIN- MENT ISOLATION VALVE														
1-CV-TV-150A	11715-CBM-092A	2 OF 2	B4	AO GLOBE	2	2	A	CIV	EV	C	03				
									FS	C	03				
									LT	C	OPB				
									ST	C	03				
									VP	OC	24				
	"A" CONTAINMENT VACUUM PUMP SUCTION ISOLATION VALVE, OUTSIDE CONTAINMENT ISOLATION VALVE														
1-CV-TV-150B	11715-CBM-092A	2 OF 2	B5	AO GLOBE	2	2	A	CIV	EV	C	03				
									FS	C	03				
									LT	C	OPB				
									ST	C	03				
									VP	OC	24				
	"A" CONTAINMENT VACUUM PUMP SUCTION ISOLATION VALVE, OUTSIDE CONTAINMENT ISOLATION VALVE														
1-CV-TV-150C	11715-CBM-092A	2 OF 2	C4	AO GLOBE	2	2	A	CIV	EV	C	03				
									FS	C	03				
									LT	C	OPB				
									ST	C	03				
									VP	OC	24				

NORTH ANNA UNIT 1
FOURTH INSERVICE TESTING INTERVAL
VALVE INSERVICE TEST TABLE

VALVE NUMBER	DRAWING NUMBER	SHEET	COOR	VALVE TYPE	VALVE SIZE	ASME CLASS	ISTC CAT	ISO VALVE TYPE	TEST TYPE	TEST POS	TEST FREQ	RE REQ V-	CS JUST CSV-	RR JUST RRV-	NC ALT TEST VNC-
	"B" CONTAINMENT VACUUM PUMP SUCTION ISOLATION VALVE, OUTSIDE CONTAINMENT ISOLATION VALVE														
1-CV-TV-150D	11715-CBM-092A	2 OF 2	C5	AO GLOBE	2	2	A	CIV	EV	C	03				
									FS	C	03				
									LT	C	OPB				
									ST	C	03				
									VP	OC	24				
	"B" CONTAINMENT VACUUM PUMP SUCTION ISOLATION VALVE, OUTSIDE CONTAINMENT ISOLATION VALVE														

NORTH ANNA UNIT 1
FOURTH INSERVICE TESTING INTERVAL
VALVE INSERVICE TEST TABLE

VALVE NUMBER	DRAWING NUMBER	SHEET	COOR	VALVE TYPE	VALVE SIZE	ASME CLASS	ISTC CAT	ISO VALVE TYPE	TEST TYPE	TEST POS	TEST FREQ	RE REQ V-	CS JUST CSV-	RR JUST RRV-	NC ALT TEST VNC-
1-DA-039	11715-CBM-090C	3 OF 3	D3	MAN DIAPHRAGM	2	2	AE	CIV	LT	C	OPB				
	VENT LINE FROM PRIMARY VENT POT, INSIDE CONTAINMENT ISOLATION VALVE														
1-DA-041	11715-CBM-090C	3 OF 3	E3	MAN DIAPHRAGM	2	2	AE	CIV	LT	C	OPB				
	VENT LINE FROM PRIMARY VENT POT, OUTSIDE CONTAINMENT ISOLATION VALVE														
1-DA-TV-100A	11715-CBM-090A	1 OF 2	E7	AO GLOBE	2	2	A	CIV	EV	C	03				
									FS	C	03				
									LT	C	OPB				
									ST	C	03				
									VP	OC	24				
	REACTOR CONTAINMENT SUMP PUMPS DISCHARGE, OUTSIDE CONTAINMENT ISOLATION VALVE														
1-DA-TV-100B	11715-CBM-090C	3 OF 3	C3	AO GLOBE	2	2	A	CIV	EV	C	03				
									FS	C	03				
									LT	C	OPB				
									ST	C	03				
									VP	OC	24				
	REACTOR CONTAINMENT SUMP PUMPS DISCHARGE, INSIDE CONTAINMENT ISOLATION VALVE														
1-DA-TV-103A	11715-CBM-090C	3 OF 3	B7	AO GLOBE	2	2	A	CIV	EV	C	03				
									FS	C	03				
									LT	C	OPB				
									ST	C	03				
									VP	OC	24				
	POST ACCIDENT SAMPLE SYSTEM RETURN, OUTSIDE CONTAINMENT ISOLATION VALVE														
1-DA-TV-103B	11715-CBM-090C	3 OF 3	B8	AO GLOBE	2	2	A	CIV	EV	C	03				
									FS	C	03				
									LT	C	OPB				
									ST	C	03				
									VP	OC	24				

NORTH ANNA UNIT 1
FOURTH INSERVICE TESTING INTERVAL
VALVE INSERVICE TEST TABLE

VALVE NUMBER	DRAWING NUMBER	SHEET	COOR	VALVE TYPE	VALVE SIZE	ASME CLASS	ISTC CAT	ISO VALVE TYPE	TEST TYPE	TEST POS	TEST FREQ	RE REQ V-	CS JUST CSV-	RR JUST RRV-	NC ALT TEST VNC-
	POST ACCIDENT SAMPLE SYSTEM RETURN, OUTSIDE CONTAINMENT TRIP VALVE														

NORTH ANNA UNIT 1
FOURTH INSERVICE TESTING INTERVAL
VALVE INSERVICE TEST TABLE

VALVE NUMBER	DRAWING NUMBER	SHEET	COOR	VALVE TYPE	VALVE SIZE	ASME CLASS	ISTC CAT	ISO VALVE TYPE	TEST TYPE	TEST POS	TEST FREQ	RE REQ V-	CS JUST CSV-	RR JUST RRV-	NC ALT TEST VNC-
1-DG-TV-100A	11715-CBM-090C	1 OF 3	B8	AO GLOBE	2	2	A	CIV	EV	C	03				
									FS	C	03				
									LT	C	OPB				
									ST	C	03				
									VP	OC	24				
	PRIMARY DRAIN TRANSFER PUMPS DISCHARGE, OUTSIDE CONTAINMENT ISOLATION VALVE														
1-DG-TV-100B	11715-CBM-090C	1 OF 3	B7	AO GLOBE	2	2	A	CIV	EV	C	03				
									FS	C	03				
									LT	C	OPB				
									ST	C	03				
									VP	OC	24				
	PRIMARY DRAIN TRANSFER PUMPS DISCHARGE, INSIDE CONTAINMENT ISOLATION VALVE														

NORTH ANNA UNIT 1
FOURTH INSERVICE TESTING INTERVAL
VALVE INSERVICE TEST TABLE

VALVE NUMBER	DRAWING NUMBER	SHEET	COOR	VALVE TYPE	VALVE SIZE	ASME CLASS	ISTC CAT	ISO VALVE TYPE	TEST TYPE	TEST POS	TEST FREQ	RE REQ V-	CS JUST CSV-	RR JUST RRV-	NC ALT TEST VNC-
1-EB-015	11715-FM -107A	1 OF 4	E5	CHECK VALVE	1.5	NC	C		CV	C	18			32	
										O	18			32	
	1H DIESEL "HA" AIR RECEIVER TANK DISCHARGE VALVE														
1-EB-034	11715-FM -107A	3 OF 4	E5	CHECK VALVE	1.5	NC	C		CV	C	18			32	
										O	18			32	
	1J DIESEL "JA" AIR RECEIVER TANK DISCHARGE VALVE														
1-EB-041	11715-FM -107A	1 OF 4	D5	CHECK VALVE	0.75	NC	AC		CV	C	03				
										O	03				
									LT	C	24				
	1H DIESEL "HA" AIR RECEIVER TANK ISOLATION VALVE														
1-EB-053	11715-FM -107A	3 OF 4	D5	CHECK VALVE	0.75	NC	AC		CV	C	03				
										O	03				
									LT	C	24				
	1J DIESEL "JA" AIR RECEIVER TANK ISOLATION VALVE														
1-EB-065	11715-FM -107A	2 OF 4	E6	CHECK VALVE	1.5	NC	C		CV	C	18			32	
										O	18			32	
	1H DIESEL "HB" AIR RECEIVER TANK DISCHARGE VALVE														
1-EB-072	11715-FM -107A	2 OF 4	D6	CHECK VALVE	0.75	NC	AC		CV	C	03				
										O	03				
									LT	C	24				
	1H DIESEL "HB" AIR RECEIVER TANK ISOLATION VALVE														
1-EB-084	11715-FM -107A	4 OF 4	E6	CHECK VALVE	1.5	NC	C		CV	C	18			32	
										O	18			32	
	1J DIESEL "JB" AIR RECEIVER TANK DISCHARGE VALVE														
1-EB-091	11715-FM -107A	4 OF 4	D6	CHECK VALVE	0.75	NC	AC		CV	C	03				
										O	03				
									LT	C	24				

NORTH ANNA UNIT 1
FOURTH INSERVICE TESTING INTERVAL
VALVE INSERVICE TEST TABLE

VALVE NUMBER	DRAWING NUMBER	SHEET	COOR	VALVE TYPE	VALVE SIZE	ASME CLASS	ISTC CAT	ISO VALVE TYPE	TEST TYPE	TEST POS	TEST FREQ	RE REQ V-	CS JUST CSV-	RR JUST RRV-	NC ALT TEST VNC-
	1J DIESEL "JB" AIR RECEIVER TANK ISOLATION VALVE														

NORTH ANNA UNIT 1
FOURTH INSERVICE TESTING INTERVAL
VALVE INSERVICE TEST TABLE

VALVE NUMBER	DRAWING NUMBER	SHEET	COOR	VALVE TYPE	VALVE SIZE	ASME CLASS	ISTC CAT	ISO VALVE TYPE	TEST TYPE	TEST POS	TEST FREQ	RE REQ V-	CS JUST CSV-	RR JUST RRV-	NC ALT TEST VNC-
1-EG-254	11715-FB -035A	2 OF 2	B7	CHECK VALVE	1.5	NC	C		CV	C O	18 03			36	
	1H DIESEL "A" EMERGENCY GENERATOR PUMP DISCHARGE CHECK VALVE														
1-EG-266	11715-FB -035A	2 OF 2	D7	CHECK VALVE	1.5	NC	C		CV	C O	18 03			36	
	1J DIESEL "A" EMERGENCY GENERATOR PUMP DISCHARGE CHECK VALVE														
1-EG-278	11715-FB -035A	2 OF 2	B6	CHECK VALVE	1.5	NC	C		CV	C O	18 03			36	
	1H DIESEL "B" EMERGENCY GENERATOR PUMP DISCHARGE CHECK VALVE														
1-EG-295	11715-FB -035A	2 OF 2	D6	CHECK VALVE	1.5	NC	C		CV	C O	18 03			36	
	1J DIESEL "B" EMERGENCY GENERATOR PUMP DISCHARGE CHECK VALVE														
1-EG-RV-103A	11715-FB -035A	2 OF 2	B7	RELIEF VALVE	1	NC	C		SP	O	120				4, 5
	1H DIESEL "A" EMER GENERATOR PUMP DISCHARGE RELIEF VALVE, RV DISCHARGE TO PUMP SUCTION														
1-EG-RV-103B	11715-FB -035A	2 OF 2	B6	RELIEF VALVE	1	NC	C		SP	O	120				4, 5
	1H DIESEL "B" EMER GENERATOR PUMP DISCHARGE RELIEF VALVE, RV DISCHARGE TO PUMP SUCTION														
1-EG-RV-105A	11715-FB -035A	2 OF 2	E7	RELIEF VALVE	1	NC	C		SP	O	120				4, 5
	1J DIESEL "A" EMER GENERATOR PUMP DISCHARGE RELIEF VALVE, RV DISCHARGE TO PUMP SUCTION														
1-EG-RV-105B	11715-FB -035A	2 OF 2	E6	RELIEF VALVE	1	NC	C		SP	O	120				4, 5
	1J DIESEL "B" EMER GENERATOR PUMP DISCHARGE RELIEF VALVE, RV DISCHARGE TO PUMP SUCTION														
1-EG-RV-602HA	11715-FM -107A	1 OF 4	E3	RELIEF VALVE	0.5	NC	C		SP	O	120				5
	1H DIESEL "A" AIR RECEIVER TANK RELIEF VALVE, RV DISCHARGE TO ATMOSPHERE														

NORTH ANNA UNIT 1
FOURTH INSERVICE TESTING INTERVAL
VALVE INSERVICE TEST TABLE

VALVE NUMBER	DRAWING NUMBER	SHEET	COOR	VALVE TYPE	VALVE SIZE	ASME CLASS	ISTC CAT	ISO VALVE TYPE	TEST TYPE	TEST POS	TEST FREQ	RE REQ V-	CS JUST CSV-	RR JUST RRV-	NC ALT TEST VNC-
1-EG-RV-602HB	11715-FM -107A	2 OF 4	E4	RELIEF VALVE	0.5	NC	C		SP	O	120				5
	1H DIESEL "B" AIR RECEIVER TANK RELIEF VALVE, RV DISCHARGE TO ATMOSPHERE														
1-EG-RV-602JA	11715-FM -107A	3 OF 4	E3	RELIEF VALVE	0.5	NC	C		SP	O	120				5
	1J DIESEL "A" AIR RECEIVER TANK RELIEF VALVE, RV DISCHARGE TO ATMOSPHERE														
1-EG-RV-602JB	11715-FM -107A	4 OF 4	E4	RELIEF VALVE	0.5	NC	C		SP	O	120				5
	1J DIESEL "B" AIR RECEIVER TANK RELIEF VALVE, RV DISCHARGE TO ATMOSPHERE														
1-EG-SOV-600HA	11715-FM -107A	1 OF 4	E6	SO GATE	1.5	NC	B		EV	O	03				
									ST	O	03				2
	DIESEL AIR START SOLENOID VALVE														
1-EG-SOV-600HB	11715-FM -107A	2 OF 4	E6	SO GATE	1.5	NC	B		EV	O	03				
									ST	O	03				2
	DIESEL AIR START SOLENOID VALVE														
1-EG-SOV-600JA	11715-FM -107A	3 OF 4	E5	SO GATE	1.5	NC	B		EV	O	03				
									ST	O	03				2
	DIESEL AIR START SOLENOID VALVE														
1-EG-SOV-600JB	11715-FM -107A	4 OF 4	E6	SO GATE	1.5	NC	B		EV	O	03				
									ST	O	03				2
	DIESEL AIR START SOLENOID VALVE														
1-EG-SOV-601HA	11715-FM -107A	1 OF 4	E6	SO GATE	0.25	NC	B		EV	O	03				
									ST	O	03				2
	DIESEL AIR START SOLENOID VALVE														
1-EG-SOV-607JA	11715-FM -107A	3 OF 4	E5	SO GATE	0.25	NC	B		EV	O	03				
									ST	O	03				2
	DIESEL AIR START SOLENOID VALVE														

NORTH ANNA UNIT 1
FOURTH INSERVICE TESTING INTERVAL
VALVE INSERVICE TEST TABLE

VALVE NUMBER	DRAWING NUMBER	SHEET	COOR	VALVE TYPE	VALVE SIZE	ASME CLASS	ISTC CAT	ISO VALVE TYPE	TEST TYPE	TEST POS	TEST FREQ	RE REQ V-	CS JUST CSV-	RR JUST RRV-	NC ALT TEST VNC-
1-FP-272	11715-CBB-102B	1 OF 1	C6	CHECK VALVE	4	2	AC	CIV	CV	C	RR			3	
										O	RR			3	
									LT	C	OPB				
	FIRE PROTECTION SUPPLY TO CONTAINMENT, INSIDE CONTAINMENT ISOLATION CHECK VALVE														
1-FP-274	11715-CBB-102B	1 OF 1	C7	MANUAL GATE	4	2	AE	CIV	LT	C	OPB				
	FIRE PROTECTION SUPPLY TO CONTAINMENT, OUTSIDE CONTAINMENT ISOLATION VALVE														

NORTH ANNA UNIT 1
FOURTH INSERVICE TESTING INTERVAL
VALVE INSERVICE TEST TABLE

VALVE NUMBER	DRAWING NUMBER	SHEET	COOR	VALVE TYPE	VALVE SIZE	ASME CLASS	ISTC CAT	ISO VALVE TYPE	TEST TYPE	TEST POS	TEST FREQ	RE REQ V-	CS JUST CSV-	RR JUST RRV-	NC ALT TEST VNC-
1-FW-047	11715-CBM-074A	1 OF 4	E6	CHECK VALVE	16	2	C		CV	C O	CS CS	 TP-01	22 22		
	"A" MAIN FEEDWATER SUPPLY, CONTAINMENT PENETRATION CHECK VALVE														
1-FW-061	11715-CBM-074A	1 OF 4	B5	CHECK VALVE	3	3	C		CV	C O	CS CS		23 23		
	STANDBY "A" AUXILIARY FEEDWATER HEADER CHECK VALVE, OUTSIDE OF CONTAINMENT														
1-FW-062	11715-CBM-074A	1 OF 4	B5	MANUAL GATE	3	3	B		EV	C O	24 24				
	AUXILIARY FEEDWATER HEADER MANUAL ISOLATION VALVE FROM MOTOR-DRIVEN PUMP HEADERS														
1-FW-063	11715-CBM-074A	1 OF 4	B6	CHECK VALVE	3	3	C		CV	C O	CS CS		23 23		
	STANDBY "A" AUXILIARY FEEDWATER HEADER CHECK VALVE, OUTSIDE OF CONTAINMENT														
1-FW-064	11715-CBM-074A	1 OF 4	B5	MANUAL GATE	3	3	B		EV	C O	24 24				
	AUXILIARY FEEDWATER HEADER MANUAL ISOLATION VALVE FROM MOTOR-DRIVEN PUMP HEADERS														
1-FW-068	11715-CBM-074A	1 OF 4	E6	CHECK VALVE	3	2	C		CV	C O	CS 03		24		
	"A" AUXILIARY FEEDWATER HEADER CHECK VALVE AT MAIN FEEDWATER HEADER														
1-FW-079	11715-CBM-074A	1 OF 4	D6	CHECK VALVE	16	2	C		CV	C O	CS CS	 TP-01	22 22		
	"B" MAIN FEEDWATER HEADER SUPPLY, CONTAINMENT PENETRATION CHECK VALVE														
1-FW-093	11715-CBM-074A	1 OF 4	B6	CHECK VALVE	3	3	C		CV	C O	CS 03		23		
	"B" AUXILIARY FEEDWATER HEADER CHECK VALVE, OUTSIDE OF CONTAINMENT														

NORTH ANNA UNIT 1
FOURTH INSERVICE TESTING INTERVAL
VALVE INSERVICE TEST TABLE

VALVE NUMBER	DRAWING NUMBER	SHEET	COOR	VALVE TYPE	VALVE SIZE	ASME CLASS	ISTC CAT	ISO VALVE TYPE	TEST TYPE	TEST POS	TEST FREQ	RE REQ V-	CS JUST CSV-	RR JUST RRV-	NC ALT TEST VNC-
1-FW-094	11715-CBM-074A	1 OF 4	B6	MANUAL GATE	3	3	B		EV	C O	24 24				
	AUXILIARY FEEDWATER HEADER MANUAL ISOLATION VALVE FROM MOTOR-DRIVEN PUMP HEADERS														
1-FW-095	11715-CBM-074A	1 OF 4	B6	CHECK VALVE	3	3	C		CV	C O	CS CS		23 23		
	STANDBY "B" AUXILIARY FEEDWATER HEADER CHECK VALVE, OUTSIDE OF CONTAINMENT														
1-FW-096	11715-CBM-074A	1 OF 4	B6	MANUAL GATE	3	3	B		EV	C O	24 24				
	AUXILIARY FEEDWATER HEADER MANUAL ISOLATION VALVE FROM MOTOR-DRIVEN PUMP HEADERS														
1-FW-100	11715-CBM-074A	1 OF 4	D6	CHECK VALVE	3	2	C		CV	C O	CS 03		24		
	"B" AUXILIARY FEEDWATER HEADER CHECK VALVE AT MAIN FEEDWATER HEADER														
1-FW-111	11715-CBM-074A	1 OF 4	B6	CHECK VALVE	16	2	C		CV	C O	CS CS	 TP-01	22 22		
	"C" MAIN FEEDWATER SUPPLY, CONTAINMENT PENETRATION CHECK VALVE														
1-FW-125	11715-CBM-074A	1 OF 4	B7	CHECK VALVE	3	3	C		CV	C O	CS CS		23 23		
	STANDBY "C" AUXILIARY FEEDWATER HEADER CHECK VALVE, OUTSIDE OF CONTAINMENT														
1-FW-126	11715-CBM-074A	1 OF 4	B7	MANUAL GATE	3	3	B		EV	C O	24 24				
	AUXILIARY FEEDWATER HEADER MANUAL ISOLATION VALVE FROM MOTOR-DRIVEN PUMP HEADERS														
1-FW-127	11715-CBM-074A	1 OF 4	B7	CHECK VALVE	3	3	C		CV	C O	CS 03		23		
	"C" AUXILIARY FEEDWATER HEADER CHECK VALVE, OUTSIDE OF CONTAINMENT														

NORTH ANNA UNIT 1
FOURTH INSERVICE TESTING INTERVAL
VALVE INSERVICE TEST TABLE

VALVE NUMBER	DRAWING NUMBER	SHEET	COOR	VALVE TYPE	VALVE SIZE	ASME CLASS	ISTC CAT	ISO VALVE TYPE	TEST TYPE	TEST POS	TEST FREQ	RE REQ V-	CS JUST CSV-	RR JUST RRV-	NC ALT TEST VNC-
1-FW-128	11715-CBM-074A	1 OF 4	B7	MANUAL GATE	3	3	B		EV	C O	24 24				
	AUXILIARY FEEDWATER HEADER MANUAL ISOLATION VALVE FROM MOTOR-DRIVEN PUMP HEADERS														
1-FW-132	11715-CBM-074A	1 OF 4	B7	CHECK VALVE	3	2	C		CV	C O	CS 03		24		
	"C" AUXILIARY FEEDWATER HEADER CHECK VALVE AT MAIN FEEDWATER HEADER														
1-FW-145	11715-CBM-074A	3 OF 4	B7	MANUAL GATE	6	3	B		EV	O	24				
	ALTERNATE WATER SUPPLY TO AFW PUMP SUCTIONS														
1-FW-148	11715-CBM-074A	3 OF 4	D8	CHECK VALVE	6	3	C		CV	C O	CS 03		25		
	TURBINE DRIVEN AUXILIARY FEEDWATER PUMP DISCHARGE CHECK VALVE														
1-FW-149	11715-CBM-074A	3 OF 4	E8	MANUAL GATE	6	3	B		EV	C O	24 24				
	AFW PUMP DISCHARGE HEADER ALIGNMENT/CROSS CONNECT VALVE														
1-FW-150	11715-CBM-074A	3 OF 4	D7	CHECK VALVE	1	3	C		CV	C O	CS 03		23		
	TURBINE DRIVEN AUXILIARY FEEDWATER PUMP RECIRC LINE CHECK VALVE														
1-FW-155	11715-CBM-074A	3 OF 4	E7	MANUAL GATE	6	3	B		EV	C O	24 24				
	AFW PUMP DISCHARGE HEADER ALIGNMENT/CROSS CONNECT VALVE														
1-FW-162	11715-CBM-074A	3 OF 4	B6	MANUAL GATE	4	3	B		EV	O	24				
	ALTERNATE WATER SUPPLY TO AFW PUMP SUCTIONS														
1-FW-165	11715-CBM-074A	3 OF 4	D6	CHECK VALVE	4	3	C		CV	C O	CS 03		25		

NORTH ANNA UNIT 1
FOURTH INSERVICE TESTING INTERVAL
VALVE INSERVICE TEST TABLE

VALVE NUMBER	DRAWING NUMBER	SHEET	COOR	VALVE TYPE	VALVE SIZE	ASME CLASS	ISTC CAT	ISO VALVE TYPE	TEST TYPE	TEST POS	TEST FREQ	RE REQ V-	CS JUST CSV-	RR JUST RRV-	NC ALT TEST VNC-
	"A" MOTOR DRIVEN AUXILIARY FEEDWATER PUMP DISCHARGE CHECK VALVE														
1-FW-166	11715-CBM-074A	3 OF 4	E6	MANUAL GATE	4	3	B		EV	C O	24 24				
	AFW PUMP DISCHARGE HEADER ALIGNMENT/CROSS CONNECT VALVE														
1-FW-167	11715-CBM-074A	3 OF 4	D6	CHECK VALVE	1	3	C		CV	C O	CS 03		23		
	"A" MOTOR DRIVEN AUXILIARY FEEDWATER PUMP RECIRC LINE CHECK VALVE														
1-FW-172	11715-CBM-074A	3 OF 4	E6	MANUAL GATE	4	3	B		EV	C O	24 24				
	AFW PUMP DISCHARGE HEADER ALIGNMENT/CROSS CONNECT VALVE														
1-FW-180	11715-CBM-074A	3 OF 4	B5	MANUAL GATE	4	3	B		EV	O	24				
	ALTERNATE WATER SUPPLY TO AFW PUMP SUCTIONS														
1-FW-183	11715-CBM-074A	3 OF 4	D5	CHECK VALVE	4	3	C		CV	C O	CS 03		25		
	"B" MOTOR DRIVEN AUXILIARY FEEDWATER PUMP DISCHARGE CHECK VALVE														
1-FW-184	11715-CBM-074A	3 OF 4	E5	MANUAL GATE	4	3	B		EV	C O	24 24				
	AFW PUMP DISCHARGE HEADER ALIGNMENT/CROSS CONNECT VALVE														
1-FW-185	11715-CBM-074A	3 OF 4	D5	CHECK VALVE	1	3	C		CV	C O	CS 03		23		
	"B" MOTOR DRIVEN AUXILIARY FEEDWATER PUMP RECIRC LINE CHECK VALVE														
1-FW-190	11715-CBM-074A	3 OF 4	E5	MANUAL GATE	4	3	B		EV	C O	24 24				
	AFW PUMP DISCHARGE HEADER ALIGNMENT/CROSS CONNECT VALVE														
1-FW-227	11715-CBM-074A	3 OF 4	A7	MANUAL GATE	6	3	B		EV	O	24				

NORTH ANNA UNIT 1
FOURTH INSERVICE TESTING INTERVAL
VALVE INSERVICE TEST TABLE

VALVE NUMBER	DRAWING NUMBER	SHEET	COOR	VALVE TYPE	VALVE SIZE	ASME CLASS	ISTC CAT	ISO VALVE TYPE	TEST TYPE	TEST POS	TEST FREQ	RE REQ V-	CS JUST CSV-	RR JUST RRV-	NC ALT TEST VNC-
	SERVICE WATER SUPPLY TO AFW PUMP SUCTIONS														
1-FW-279	11715-CBM-074A	3 OF 4	D8	CHECK VALVE	4	3	C		CV	C O	CS 03		23		
	"A" AUXILIARY FEEDWATER HEADER CHECK VALVE, OUTSIDE OF CONTAINMENT														
1-FW-526	11715-CBM-074A	3 OF 4	D7	CHECK VALVE	1	3	C		CV	C O	RR 03			37	
	PUMP LUBE OIL COOLER CHECK VALVE														
1-FW-527	11715-CBM-074A	3 OF 4	E6	CHECK VALVE	1	3	C		CV	C O	RR 03			37	
	PUMP LUBE OIL COOLER CHECK VALVE														
1-FW-528	11715-CBM-074A	3 OF 4	E4	CHECK VALVE	1	3	C		CV	C O	RR 03			37	
	PUMP LUBE OIL COOLER CHECK VALVE														
1-FW-FCV-1478	11715-CBM-074A	1 OF 4	E3	AO GATE	16	NC	B		EV FS ST VP	C C C OC	CS CS CS 24		6 6		3
	"A" MAIN FEEDWATER REG VALVE														
1-FW-FCV-1479	11715-CBM-074A	1 OF 4	F4	AO GLOBE	6	NC	B		EV FS ST	C C C	CS CS CS		6 6		3
	"A" BYPASS FEEDWATER REG VALVE														
1-FW-FCV-1488	11715-CBM-074A	1 OF 4	D4	AO GATE	16	NC	B		EV FS ST VP	C C C OC	CS CS CS 24		6 6		3
	"B" MAIN FEEDWATER REG VALVE														

NORTH ANNA UNIT 1
FOURTH INSERVICE TESTING INTERVAL
VALVE INSERVICE TEST TABLE

VALVE NUMBER	DRAWING NUMBER	SHEET	COOR	VALVE TYPE	VALVE SIZE	ASME CLASS	ISTC CAT	ISO VALVE TYPE	TEST TYPE	TEST POS	TEST FREQ	RE REQ V-	CS JUST CSV-	RR JUST RRV-	NC ALT TEST VNC-
1-FW-FCV-1489	11715-CBM-074A	1 OF 4	D4	AO GLOBE	6	NC	B		EV	C	CS		6		
									FS	C	CS		6		
									ST	C	CS				3
	"B" BYPASS FEEDWATER REG VALVE														
1-FW-FCV-1498	11715-CBM-074A	1 OF 4	B4	AO GATE	16	NC	B		EV	C	CS		6		
									FS	C	CS		6		
									ST	C	CS				3
									VP	OC	24				
	"C" MAIN FEEDWATER REG VALVE														
1-FW-FCV-1499	11715-CBM-074A	1 OF 4	C4	AO GLOBE	6	NC	B		EV	C	CS		6		
									FS	C	CS		6		
									ST	C	CS				3
	"C" BYPASS FEEDWATER REG VALVE														
1-FW-HCV-100A	11715-CBM-074A	1 OF 4	B5	AO GLOBE	3	3	B		EV	O	CS		20		
										P	03				
									FS	O	CS		20		
									ST	O	NA	2			
									VP	OC	24				
	STANDBY AUXILIARY FEEDWATER SUPPLY TO "A" STEAM														
1-FW-HCV-100B	11715-CBM-074A	1 OF 4	B6	AO GLOBE	3	3	B		EV	O	CS		20		
										P	03				
									FS	O	CS		20		
									ST	O	NA	2			
									VP	OC	24				
	STANDBY AUXILIARY FEEDWATER SUPPLY TO "B" STEAM														
1-FW-HCV-100C	11715-CBM-074A	1 OF 4	B7	AO GLOBE	3	3	B		EV	O	CS		20		
										P	03				
									FS	O	CS		20		
									ST	O	NA	2			
									VP	OC	24				

NORTH ANNA UNIT 1
FOURTH INSERVICE TESTING INTERVAL
VALVE INSERVICE TEST TABLE

VALVE NUMBER	DRAWING NUMBER	SHEET	COOR	VALVE TYPE	VALVE SIZE	ASME CLASS	ISTC CAT	ISO VALVE TYPE	TEST TYPE	TEST POS	TEST FREQ	RE REQ V-	CS JUST CSV-	RR JUST RRV-	NC ALT TEST VNC-
	NORMAL AUXILIARY FEEDWATER SUPPLY TO "C" STEAM GENERATOR														
1-FW-MOV-100A	11715-CBM-074A	1 OF 4	B5	MO GLOBE	3	3	B		EV	C	03				
										O	03				
									ST	C	03				
										O	03				
									VP	OC	24				
	STANDBY AUXILIARY FEEDWATER SUPPLY TO "A" STEAM														
1-FW-MOV-100B	11715-CBM-074A	1 OF 4	B6	MO GLOBE	3	3	B		EV	C	03				
										O	03				
									ST	C	03				
										O	03				
									VP	OC	24				
	NORMAL AUXILIARY FEEDWATER SUPPLY TO "B" STEAM GENERATOR														
1-FW-MOV-100C	11715-CBM-074A	1 OF 4	B7	MO GLOBE	3	3	B		EV	C	03				
										O	03				
									ST	C	03				
										O	03				
									VP	OC	24				
	STANDBY AUXILIARY FEEDWATER SUPPLY TO "C" STEAM														
1-FW-MOV-100D	11715-CBM-074A	3 OF 4	E8	MO GLOBE	3	3	B		EV	C	03				
										O	03				
									ST	C	03				
										O	03				
									VP	OC	24				
	NORMAL AUXILIARY FEEDWATER SUPPLY TO "A" STEAM GENERATOR														
1-FW-MOV-154A	11715-CBM-074A	1 OF 4	E3	MO GATE	16	NC	B		EV	C	CS		6		
									ST	C	CS		6		
									VP	OC	24				

NORTH ANNA UNIT 1
FOURTH INSERVICE TESTING INTERVAL
VALVE INSERVICE TEST TABLE

VALVE NUMBER	DRAWING NUMBER	SHEET	COOR	VALVE TYPE	VALVE SIZE	ASME CLASS	ISTC CAT	ISO VALVE TYPE	TEST TYPE	TEST POS	TEST FREQ	RE REQ V-	CS JUST CSV-	RR JUST RRV-	NC ALT TEST VNC-
	"A" MAIN FEEDWATER SUPPLY ISOLATION VALVE														
1-FW-MOV-154B	11715-CBM-074A	1 OF 4	D3	MO GATE	16	NC	B		EV	C	CS		6		
									ST	C	CS		6		
									VP	OC	24				
	"B" MAIN FEEDWATER SUPPLY ISOLATION VALVE														
1-FW-MOV-154C	11715-CBM-074A	1 OF 4	B3	MO GATE	16	NC	B		EV	C	CS		6		
									ST	C	CS		6		
									VP	OC	24				
	"C" MAIN FEEDWATER SUPPLY ISOLATION VALVE														
1-FW-PCV-159A	11715-CBM-074A	3 OF 4	F8	AO GLOBE	4	3	B		EV	O	CS		21		
										P	03				
									FS	O	CS		21		
									ST	O	NA	2			
									VP	OC	24				
	AUXILIARY FEEDWATER PRESSURE CONTROL VALVE														
1-FW-PCV-159B	11715-CBM-074A	3 OF 4	E8	A0 GLOBE	4	3	B		EV	O	CS		21		
										P	03				
									FS	O	CS		21		
									ST	O	NA	2			
									VP	OC	24				
	AUXILIARY FEEDWATER PRESSURE CONTROL VALVE														
1-FW-RV-100	11715-CBM-074A	3 OF 4	D8	RELIEF VALVE	3	3	C		SP	O	120	3			
	TURBINE DRIVEN AUXILIARY FEED PUMP FEEDWATER DISCHARGE RELIEF VALVE														

NORTH ANNA UNIT 1
FOURTH INSERVICE TESTING INTERVAL
VALVE INSERVICE TEST TABLE

VALVE NUMBER	DRAWING NUMBER	SHEET	COOR	VALVE TYPE	VALVE SIZE	ASME CLASS	ISTC CAT	ISO VALVE TYPE	TEST TYPE	TEST POS	TEST FREQ	RE REQ V-	CS JUST CSV-	RR JUST RRV-	NC ALT TEST VNC-
1-GN-225	11715-FM -105A	1 OF 3	E4	CHECK VALVE	0.5	NC	AC		CV	C	RR			27	
										O	RR			27	
									LT	C	24				
	BOTTLED NITROGEN SUPPLY TO PORV ISOLATION CHECK VALVE														
1-GN-229	11715-FM -105A	1 OF 3	E6	CHECK VALVE	0.5	NC	AC		CV	C	RR			27	
										O	RR			27	
									LT	C	24				
	BOTTLED NITROGEN SUPPLY TO PORV ISOLATION CHECK VALVE														
1-GN-RV-108A-1	11715-FM -105A	1 OF 3	E7	RELIEF VALVE	0.75	NC	C		SP	O	120				5
	BOTTLED NITROGEN SUPPLY TO PORV RELIEF VALVE														
1-GN-RV-108A-2	11715-FM -105A	1 OF 3	F6	RELIEF VALVE	0.75	NC	C		SP	O	120				5
	BOTTLED NITROGEN SUPPLY TO PORV RELIEF VALVE														
1-GN-RV-108A-3	11715-FM -105A	1 OF 3	E6	RELIEF VALVE	0.75	NC	C		SP	O	120				5
	BOTTLED NITROGEN SUPPLY TO PORV RELIEF VALVE														
1-GN-RV-108B-1	11715-FM -105A	1 OF 3	E3	RELIEF VALVE	0.75	NC	C		SP	O	120				5
	BOTTLED NITROGEN SUPPLY TO PORV RELIEF VALVE														
1-GN-RV-108B-2	11715-FM -105A	1 OF 3	F5	RELIEF VALVE	0.75	NC	C		SP	O	120				5
	BOTTLED NITROGEN SUPPLY TO PORV RELIEF VALVE														
1-GN-RV-108B-3	11715-FM -105A	1 OF 3	E5	RELIEF VALVE	0.75	NC	C		SP	O	120				5
	BOTTLED NITROGEN SUPPLY TO PORV RELIEF VALVE														

NORTH ANNA UNIT 1
FOURTH INSERVICE TESTING INTERVAL
VALVE INSERVICE TEST TABLE

VALVE NUMBER	DRAWING NUMBER	SHEET	COOR	VALVE TYPE	VALVE SIZE	ASME CLASS	ISTC CAT	ISO VALVE TYPE	TEST TYPE	TEST POS	TEST FREQ	RE REQ V-	CS JUST CSV-	RR JUST RRV-	NC ALT TEST VNC-
1-HC-014	11715-CBM-106A	1 OF 4	E8	CHECK VALVE	2	2	AC	CIV	CV	C	RR			4	
										O	RR			4	
									LT	C	OPB				
	UNIT 1 RETURN LINE FROM UNIT 1 HYDROGEN ANALYZERS & RECOMB, INSIDE CONT ISOL CHECK VALVE														
1-HC-018	11715-CBM-106A	2 OF 4	E6	CHECK VALVE	2	2	AC	CIV	CV	C	RR			4	
										O	RR			4	
									LT	C	OPB				
	UNIT 1 RETURN LINE FROM UNIT 2 HYDROGEN ANALYZERS & RECOMB, INSIDE CONT ISOL CHECK VALVE														
1-HC-TV-100A	11715-CBM-106A	1 OF 4	E8	SO GLOBE	0.375	2	A	CIV	EV	C	03				
									FS	C	03				
									LT	C	OPB				
									ST	C	03				
									VP	OC	24				
	UNIT 1 SAMPLE LINE TO UNIT 1 HYDROGEN ANALYZERS, INSIDE CONTAINMENT ISOLATION VALVE														
1-HC-TV-100B	11715-CBM-106A	1 OF 4	E7	SO GLOBE	0.375	2	A	CIV	EV	C	03				
									FS	C	03				
									LT	C	OPB				
									ST	C	03				
									VP	OC	24				
	UNIT 1 SAMPLE LINE TO UNIT 1 HYDROGEN ANALYZERS, OUTSIDE CONTAINMENT ISOLATION VALVE														
1-HC-TV-101A	11715-CBM-106A	1 OF 4	D7	SO GLOBE	0.375	2	A	CIV	EV	C	03				

NORTH ANNA UNIT 1
FOURTH INSERVICE TESTING INTERVAL
VALVE INSERVICE TEST TABLE

VALVE NUMBER	DRAWING NUMBER	SHEET	COOR	VALVE TYPE	VALVE SIZE	ASME CLASS	ISTC CAT	ISO VALVE TYPE	TEST TYPE	TEST POS	TEST FREQ	RE REQ V-	CS JUST CSV-	RR JUST RRV-	NC ALT TEST VNC-
1-HC-TV-101A	11715-CBM-106A	1 OF 4	D7	SO GLOBE	0.375	2	A	CIV	FS	C	03				
									LT	C	OPB				
									ST	C	03				
									VP	OC	24				
	RETURN ISOLATION FROM UNIT 1 HYDROGEN ANALYZERS TO UNIT 1 CONT,OUTSIDE CONT ISOL VALVE														
1-HC-TV-101B	11715-CBM-106A	1 OF 4	D7	SO GLOBE	0.375	2	A	CIV	EV	C	03				
									FS	C	03				
									LT	C	OPB				
									ST	C	03				
									VP	OC	24				
	RETURN ISOLATION FROM UNIT 1 HYDROGEN ANALYZERS TO UNIT 1 CONT,OUTSIDE CONT ISOL VALVE														
1-HC-TV-102A	11715-CBM-106A	2 OF 4	E6	SO GLOBE	0.375	2	A	CIV	EV	C	03				
									FS	C	03				
									LT	C	OPB				
									ST	C	03				
									VP	OC	24				
	UNIT 1 SAMPLE LINE TO UNIT 2 HYDROGEN ANALYZERS, INSIDE CONTAINMENT ISOLATION VALVE														
1-HC-TV-102B	11715-CBM-106A	2 OF 4	E7	SO GLOBE	0.375	2	A	CIV	EV	C	03				
									FS	C	03				
									LT	C	OPB				
									ST	C	03				
									VP	OC	24				
	UNIT 1 SAMPLE LINE TO UNIT 2 HYDROGEN ANALYZERS, OUTSIDE CONTAINMENT ISOLATION VALVE														

NORTH ANNA UNIT 1
FOURTH INSERVICE TESTING INTERVAL
VALVE INSERVICE TEST TABLE

VALVE NUMBER	DRAWING NUMBER	SHEET	COOR	VALVE TYPE	VALVE SIZE	ASME CLASS	ISTC CAT	ISO VALVE TYPE	TEST TYPE	TEST POS	TEST FREQ	RE REQ V-	CS JUST CSV-	RR JUST RRV-	NC ALT TEST VNC-
1-HC-TV-103A	11715-CBM-106A	2 OF 4	D7	SO GLOBE	0.375	2	A	CIV	EV	C	03				
									FS	C	03				
									LT	C	OPB				
									ST	C	03				
									VP	OC	24				
	RETURN ISOLATION FROM UNIT 2 HYDROGEN ANALYZERS TO UNIT 1 CONT,OUTSIDE CONT ISOL VALVE														
1-HC-TV-103B	11715-CBM-106A	2 OF 4	D7	SO GLOBE	0.375	2	A	CIV	EV	C	03				
									FS	C	03				
									LT	C	OPB				
									ST	C	03				
									VP	OC	24				
	RETURN ISOLATION FROM UNIT 2 HYDROGEN ANALYZERS TO UNIT 1 CONT,OUTSIDE CONT ISOL VALVE														
1-HC-TV-104A	11715-CBM-106A	4 OF 4	F6	AO GLOBE	2.5	2	A	CIV	EV	C	03				
									FS	C	03				
									LT	C	OPB				
									ST	C	03				
									VP	OC	24				
	SUPPLY ISOL FROM UNIT 1 CONT TO HYDRO RECOMB & CONT BLOWER,OUTSIDE CONT ISOL VALVE														
1-HC-TV-104B	11715-CBM-106A	4 OF 4	F6	AO GLOBE	2.5	2	A	CIV	EV	C	03				
									FS	C	03				
									LT	C	OPB				
									ST	C	03				
									VP	OC	24				

NORTH ANNA UNIT 1
FOURTH INSERVICE TESTING INTERVAL
VALVE INSERVICE TEST TABLE

VALVE NUMBER	DRAWING NUMBER	SHEET	COOR	VALVE TYPE	VALVE SIZE	ASME CLASS	ISTC CAT	ISO VALVE TYPE	TEST TYPE	TEST POS	TEST FREQ	RE REQ V-	CS JUST CSV-	RR JUST RRV-	NC ALT TEST VNC-
	SUPPLY ISOL FROM UNIT 1 CONT TO HYDRO RECOMB & CONT BLOWER,OUTSIDE CONT ISOL VALVE														
1-HC-TV-105A	11715-CBM-106A	1 OF 4	E6	AO GLOBE	2.5	2	A	CIV	EV	C	03				
									FS	C	03				
									LT	C	OPB				
									ST	C	03				
									VP	OC	24				
	RETURN ISOLATION FROM UNIT 1 HYDROGEN RECOMB & ANAL TO UNIT1 CONT, OUTSIDE CONT ISOL VALVE														
1-HC-TV-105B	11715-CBM-106A	1 OF 4	E6	AO GLOBE	2.5	2	A	CIV	EV	C	03				
									FS	C	03				
									LT	C	OPB				
									ST	C	03				
									VP	OC	24				
	RETURN ISOLATION FROM UNIT 1 HYDROGEN RECOMB & ANAL TO UNIT1 CONT, OUTSIDE CONT ISOL VALVE														
1-HC-TV-106A	11715-CBM-106A	4 OF 4	F8	AO GLOBE	2.5	2	A	CIV	EV	C	03				
									FS	C	03				
									LT	C	OPB				
									ST	C	03				
									VP	OC	24				
	UNIT 1 SUPPLY ISOLATION TO CONT ATMO PURGE BLOW & HYDRO RECOMB, OUTSIDE CONT ISOL VLV														
1-HC-TV-106B	11715-CBM-106A	4 OF 4	F8	AO GLOBE	2.5	2	A	CIV	EV	C	03				
									FS	C	03				
									LT	C	OPB				
									ST	C	03				

NORTH ANNA UNIT 1
FOURTH INSERVICE TESTING INTERVAL
VALVE INSERVICE TEST TABLE

VALVE NUMBER	DRAWING NUMBER	SHEET	COOR	VALVE TYPE	VALVE SIZE	ASME CLASS	ISTC CAT	ISO VALVE TYPE	TEST TYPE	TEST POS	TEST FREQ	RE REQ V-	CS JUST CSV-	RR JUST RRV-	NC ALT TEST VNC-
1-HC-TV-106B	11715-CBM-106A	4 OF 4	F8	AO GLOBE	2.5	2	A	CIV	VP	OC	24				
	UNIT 1 SUPPLY ISOLATION TO CONT ATMO PURGE BLOW & HYDRO RECOMB, OUTSIDE CONT ISOL VLV														
1-HC-TV-107A	11715-CBM-106A	2 OF 4	E7	AO GLOBE	2.5	2	A	CIV	EV	C	03				
									FS	C	03				
									LT	C	OPB				
									ST	C	03				
									VP	OC	24				
	RETURN ISOLATION FROM UNIT 2 HYDROGEN RECOMB & ANAL TO UNIT 1 CONT, OUTSIDE CONT ISOL VALVE														
1-HC-TV-107B	11715-CBM-106A	2 OF 4	E8	AO GLOBE	2.5	2	A	CIV	EV	C	03				
									FS	C	03				
									LT	C	OPB				
									ST	C	03				
									VP	OC	24				
	RETURN ISOLATION FROM UNIT 2 HYDROGEN RECOMB & ANAL TO UNIT 1 CONT, OUTSIDE CONT ISOL VALVE														
1-HC-TV-108A	11715-CBM-106A	3 OF 4	E8	SO GLOBE	0.375	2	A	CIV	EV	C	03				
									FS	C	03				
									LT	C	OPB				
									ST	C	03				
									VP	OC	24				
	UNIT 1 SAMPLE LINE TO AIR SAMPLE PANEL, INSIDE CONTAINMENT ISOLATION VALVE														
1-HC-TV-108B	11715-CBM-106A	3 OF 4	E7	SO GLOBE	0.375	2	A	CIV	EV	C	03				
									FS	C	03				
									LT	C	OPB				
									ST	C	03				
									VP	OC	24				

NORTH ANNA UNIT 1
FOURTH INSERVICE TESTING INTERVAL
VALVE INSERVICE TEST TABLE

VALVE NUMBER	DRAWING NUMBER	SHEET	COOR	VALVE TYPE	VALVE SIZE	ASME CLASS	ISTC CAT	ISO VALVE TYPE	TEST TYPE	TEST POS	TEST FREQ	RE REQ V-	CS JUST CSV-	RR JUST RRV-	NC ALT TEST VNC-
	UNIT 1 SAMPLE LINE TO AIR SAMPLE PANEL, OUTSIDE CONTAINMENT ISOLATION VALVE														

NORTH ANNA UNIT 1
FOURTH INSERVICE TESTING INTERVAL
VALVE INSERVICE TEST TABLE

VALVE NUMBER	DRAWING NUMBER	SHEET	COOR	VALVE TYPE	VALVE SIZE	ASME CLASS	ISTC CAT	ISO VALVE TYPE	TEST TYPE	TEST POS	TEST FREQ	RE REQ V-	CS JUST CSV-	RR JUST RRV-	NC ALT TEST VNC-
1-HV-MOV-100A	11715-CBB-006A	1 OF 3	D7	MO BFLY	36	2	AE	CIV	LT VP	C OC	OPB 24				
	CONTAINMENT PURGE SUPPLY, INSIDE CONTAINMENT ISOLATION VALVE														
1-HV-MOV-100B	11715-CBB-006A	1 OF 3	D7	MO BFLY	36	2	AE	CIV	LT VP	C OC	OPB 24				
	CONTAINMENT PURGE SUPPLY, OUTSIDE CONTAINMENT ISOLATION VALVE														
1-HV-MOV-100C	11715-CBB-006A	1 OF 3	C7	MO BFLY	36	2	AE	CIV	LT VP	C OC	OPB 24				
	CONTAINMENT PURGE EXHAUST, INSIDE CONTAINMENT ISOLATION VALVE														
1-HV-MOV-100D	11715-CBB-006A	1 OF 3	C7	MO BFLY	36	2	AE	CIV	LT VP	C OC	OPB 24				
	CONTAINMENT PURGE EXHAUST, OUTSIDE CONTAIN- MENT ISOLATION VALVE														
1-HV-MOV-101	11715-CBB-006A	1 OF 3	C7	MO BFLY	8	2	AE	CIV	LT VP	C OC	OPB 24				
	CONTAINMENT PURGE BYPASS, OUTSIDE CONTAINMENT ISOLATION VALVE														
1-HV-MOV-102	11715-CBB-006A	1 OF 3	D7	MO BFLY	18	2	AE	CIV	LT VP	C OC	OPB 24				
	CONTAINMENT PURGE ALTERNATE SUPPLY, OUTSIDE CONTAINMENT ISOLATION VALVE														
1-HV-MOV-111A	11715-CBB-040C	1 OF 3	E8	MO GATE	4	3	B		EV ST VP	O O OC	03 03 24				
	CONTROL ROOM CHILLER ISOLATION VALVE														
1-HV-MOV-111B	11715-CBB-040C	1 OF 3	C8	MO GATE	4	3	B		EV ST	O O	03 03				
	CONTROL ROOM CHILLER ISOLATION VALVE														

NORTH ANNA UNIT 1
FOURTH INSERVICE TESTING INTERVAL
VALVE INSERVICE TEST TABLE

VALVE NUMBER	DRAWING NUMBER	SHEET	COOR	VALVE TYPE	VALVE SIZE	ASME CLASS	ISTC CAT	ISO VALVE TYPE	TEST TYPE	TEST POS	TEST FREQ	RE REQ V-	CS JUST CSV-	RR JUST RRV-	NC ALT TEST VNC-
1-HV-MOV-111C	11715-CBB-040C	1 OF 3	D8	MO GATE	4	3	B		EV	O	03				
									ST	O	03				
	CONTROL ROOM CHILLER ISOLATION VALVE														
1-HV-MOV-113A	11715-CBB-040D	1 OF 3	E3	MO GATE	4	3	B		EV	O	03				
									ST	O	03				
									VP	OC	24				
	CONTROL ROOM CONDENSER WATER SYSTEM ISOLATION VALVE														
1-HV-MOV-113B	11715-CBB-040D	1 OF 3	B3	MO GATE	4	3	B		EV	O	03				
									ST	O	03				
	CONTROL ROOM CONDENSER WATER SYSTEM ISOLATION VALVE														
1-HV-MOV-113C	11715-CBB-040D	1 OF 3	C3	MO GATE	4	3	B		EV	O	03				
									ST	O	03				
	CONTROL ROOM CONDENSER WATER SYSTEM ISOLATION VALVE														
1-HV-PCV-1235A1	11715-CBB-040D	1 OF 3	D6	AO GLOBE	3	3	B		EV	C	03				
									FS	C	03				
									ST	C	NA	2			
	CONTROL ROOM CONDENSER WATER BYPASS LINE PRESSURE CONTROL VALVE														
1-HV-PCV-1235A2	11715-CBB-040D	1 OF 3	E3	AO GLOBE	2.5	3	B		EV	O	03				
									FS	O	03				
									ST	O	NA	2			
	CONTROL ROOM CONDENSER WATER PRESSURE CONTROL VALVE														
1-HV-PCV-1235B1	11715-CBB-040D	1 OF 3	A6	AO GLOBE	3	3	B		EV	C	03				
									FS	C	03				
									ST	C	NA	2			
	CONTROL ROOM CONDENSER WATER BYPASS LINE PRESSURE CONTROL VALVE														
1-HV-PCV-1235B2	11715-CBB-040D	1 OF 3	B3	AO GLOBE	2.5	3	B		EV	O	03				
									FS	O	03				

NORTH ANNA UNIT 1
FOURTH INSERVICE TESTING INTERVAL
VALVE INSERVICE TEST TABLE

VALVE NUMBER	DRAWING NUMBER	SHEET	COOR	VALVE TYPE	VALVE SIZE	ASME CLASS	ISTC CAT	ISO VALVE TYPE	TEST TYPE	TEST POS	TEST FREQ	RE REQ V-	CS JUST CSV-	RR JUST RRV-	NC ALT TEST VNC-
1-HV-PCV-1235B2	11715-CBB-040D	1 OF 3	B3	AO GLOBE	2.5	3	B		ST	O	NA	2			
	CONTROL ROOM CONDENSER WATER PRESSURE CONTROL VALVE														
1-HV-PCV-1235C1	11715-CBB-040D	1 OF 3	C6	AO GLOBE	3	3	B		EV	C	03				
									FS	C	03				
									ST	C	NA	2			
	CONTROL ROOM CONDENSER WATER BYPASS LINE PRESSURE CONTROL VALVE														
1-HV-PCV-1235C2	11715-CBB-040D	1 OF 3	C3	AO GLOBE	2.5	3	B		EV	O	03				
									FS	O	03				
									ST	O	NA	2			
	CONTROL ROOM CONDENSER WATER PRESSURE CONTROL VALVE														
1-HV-RV-1200	11715-CBB-040C	1 OF 3	E4	RELIEF VALVE	0.75	3	C		SP	O	120	3, NOTE 1			
	CONTROL ROOM CHILLER SYSTEM RELIEF VALVE														
1-HV-RV-1201	11715-CBB-040C	1 OF 3	C3	RELIEF VALVE	0.75	3	C		SP	O	120	3, NOTE 1			
	CONTROL ROOM CHILLER SYSTEM RELIEF VALVE														
1-HV-RV-1202A	11715-CBB-040C	1 OF 3	E7	RELIEF VALVE	0.75	3	C		SP	O	120	3, NOTE 1			
	CONTROL ROOM CHILLER SYSTEM RELIEF VALVE														
1-HV-RV-1202B	11715-CBB-040C	1 OF 3	C7	RELIEF VALVE	0.75	3	C		SP	O	120	3, NOTE 1			
	CONTROL ROOM CHILLER SYSTEM RELIEF VALVE														
1-HV-RV-1202C	11715-CBB-040C	1 OF 3	D7	RELIEF VALVE	0.75	3	C		SP	O	120	3, NOTE 1			
	CONTROL ROOM CHILLER SYSTEM RELIEF VALVE														
1-HV-RV-1205A	11715-CBB-040D	1 OF 3	E4	RELIEF VALVE	0.5	3	C		SP	O	120	3, NOTE 1			
	CONTROL ROOM CONDENSER WATER SYSTEM RELIEF VALVE														
1-HV-RV-1205B	11715-CBB-040D	1 OF 3	B4	RELIEF VALVE	0.5	3	C		SP	O	120	3, NOTE 1			
	CONTROL ROOM CONDENSER WATER SYSTEM RELIEF VALVE														
1-HV-RV-1205C	11715-CBB-040D	1 OF 3	D4	RELIEF VALVE	0.75	3	C		SP	O	120	3, NOTE 1			

NORTH ANNA UNIT 1
FOURTH INSERVICE TESTING INTERVAL
VALVE INSERVICE TEST TABLE

VALVE NUMBER	DRAWING NUMBER	SHEET	COOR	VALVE TYPE	VALVE SIZE	ASME CLASS	ISTC CAT	ISO VALVE TYPE	TEST TYPE	TEST POS	TEST FREQ	RE REQ V-	CS JUST CSV-	RR JUST RRV-	NC ALT TEST VNC-
	CONTROL ROOM CONDENSER WATER SYSTEM RELIEF VALVE														
1-HV-SOV-1200A	11715-CBB-040D	1 OF 3	F7	SO GATE	0.5	3	B		EV ST	O O	03 03				
	CONTROL ROOM CONDENSER PUMP SEAL COOLING WATER LINE ISOLATION VALVE														
1-HV-SOV-1200B	11715-CBB-040D	1 OF 3	B7	SO GATE	0.5	3	B		EV ST	O O	03 03				
	CONTROL ROOM CONDENSER PUMP SEAL COOLING WATER LINE ISOLATION VALVE														
1-HV-SOV-1200C	11715-CBB-040D	1 OF 3	D7	SO GATE	0.5	3	B		EV ST	O O	03 03				
	CONTROL ROOM CONDENSER PUMP SEAL COOLING WATER LINE ISOLATION VALVE														

NORTH ANNA UNIT 1
FOURTH INSERVICE TESTING INTERVAL
VALVE INSERVICE TEST TABLE

VALVE NUMBER	DRAWING NUMBER	SHEET	COOR	VALVE TYPE	VALVE SIZE	ASME CLASS	ISTC CAT	ISO VALVE TYPE	TEST TYPE	TEST POS	TEST FREQ	RE REQ V-	CS JUST CSV-	RR JUST RRV-	NC ALT TEST VNC-
1-IA-0055	11715-CBM-082A	1 OF 3	F5	CHECK VALVE	2	2	AC	CIV	CV	C	RR			5	
										O	RR	TP-01		5	
									LT	C	OPB				
	INSTRUMENT AIR SUPPLY TO CONTAINMENT, INSIDE CONTAINMENT ISOLATION CHECK VALVE														
1-IA-0149	11715-CBM-082N	3 OF 3	C4	CHECK VALVE	1	2	AC	CIV	CV	C	RR			5	
										O	RR	TP-01		5	
									LT	C	OPB				
	RETURN TO CONTAINMENT FROM RADIATION MONITORING CABINET, INSIDE CONT ISOL CHECK VALVE														
1-IA-0944	11715-FM -082M	1 OF 1	F3	CHECK VALVE	0.75	NC	AC		CV	C	CS		12		
										O	CS		12		
									LT	C	24				1
	MAIN STEAM PCV VALVE AIR ACCUMULATOR ISOLATION CHECK														
1-IA-0948	11715-FM -082M	1 OF 1	F4	CHECK VALVE	0.75	NC	AC		CV	C	CS		12		
										O	CS		12		
									LT	C	24				1
	MAIN STEAM PCV VALVE AIR ACCUMULATOR ISOLATION CHECK														
1-IA-0952	11715-FM -082M	1 OF 1	F5	CHECK VALVE	0.75	NC	AC		CV	C	CS		12		
										O	CS		12		
									LT	C	24				1
	MAIN STEAM PCV VALVE AIR ACCUMULATOR ISOLATION CHECK														
1-IA-0959	11715-FM -082M	1 OF 1	C4	CHECK VALVE	0.75	NC	AC		CV	C	CS		12		
										O	CS		12		
									LT	C	24				1
	AUXILIARY FEEDWATER VALVE AIR ACCUMULATOR ISOLATION CHECK VALVE														
1-IA-0963	11715-FM -082M	1 OF 1	C5	CHECK VALVE	0.75	NC	AC		CV	C	CS		12		
										O	CS		12		
									LT	C	24				1

NORTH ANNA UNIT 1
FOURTH INSERVICE TESTING INTERVAL
VALVE INSERVICE TEST TABLE

VALVE NUMBER	DRAWING NUMBER	SHEET	COOR	VALVE TYPE	VALVE SIZE	ASME CLASS	ISTC CAT	ISO VALVE TYPE	TEST TYPE	TEST POS	TEST FREQ	RE REQ V-	CS JUST CSV-	RR JUST RRV-	NC ALT TEST VNC-
	AUXILIARY FEEDWATER VALVE AIR ACCUMULATOR ISOLATION CHECK VALVE														
1-IA-0967	11715-FM -082M	1 OF 1	C6	CHECK VALVE	0.75	NC	AC		CV	C	CS		12		
										O	CS		12		
									LT	C	24				1
	AUXILIARY FEEDWATER VALVE AIR ACCUMULATOR ISOLATION CHECK VALVE														
1-IA-0971	11715-FM -082M	1 OF 1	C6	CHECK VALVE	0.75	NC	AC		CV	C	CS		12		
										O	CS		12		
									LT	C	24				1
	AUXILIARY FEEDWATER VALVE AIR ACCUMULATOR ISOLATION CHECK VALVE														
1-IA-0975	11715-FM -082M	1 OF 1	C7	CHECK VALVE	0.75	NC	AC		CV	C	CS		12		
										O	CS		12		
									LT	C	24				1
	AUXILIARY FEEDWATER VALVE AIR ACCUMULATOR ISOLATION CHECK VALVE														
1-IA-2152	11715-FM -082A	2 OF 3	F7	CHECK VALVE	0.75	NC	AC		CV	C	RR			27	
										O	RR			27	
									LT	C	24				
	BOTTLED NITROGEN SUPPLY TO PORV ISOLATION CHECK VALVE														
1-IA-2153	11715-FM -082A	2 OF 3	F8	CHECK VALVE	0.75	NC	AC		CV	C	RR			27	
										O	RR			27	
									LT	C	24				
	BOTTLED NITROGEN SUPPLY TO PORV ISOLATION CHECK VALVE														
1-IA-2154	11715-FM -082A	2 OF 3	F7	CHECK VALVE	0.75	NC	AC		CV	C	RR			27	
										O	RR			27	
									LT	C	24				
	BOTTLED NITROGEN SUPPLY TO PORV ISOLATION CHECK VALVE														
1-IA-2155	11715-FM -082A	2 OF 3	F8	CHECK VALVE	0.75	NC	AC		CV	C	RR			27	
										O	RR			27	

NORTH ANNA UNIT 1
FOURTH INSERVICE TESTING INTERVAL
VALVE INSERVICE TEST TABLE

VALVE NUMBER	DRAWING NUMBER	SHEET	COOR	VALVE TYPE	VALVE SIZE	ASME CLASS	ISTC CAT	ISO VALVE TYPE	TEST TYPE	TEST POS	TEST FREQ	RE REQ V-	CS JUST CSV-	RR JUST RRV-	NC ALT TEST VNC-
1-IA-2155	11715-FM -082A	2 OF 3	F8	CHECK VALVE	0.75	NC	AC		LT	C	24				
	BOTTLED NITROGEN SUPPLY TO PORV ISOLATION CHECK VALVE														
1-IA-2429	11715-FM -082C	2 OF 2	C4	CHECK VALVE	0.5	NC	AC		CV	C	24			28	
										O	24			28	
									LT	C	24				
	SAFEGUARDS EXHAUST VENT RELIEF DAMPER AIR RECEIVER ISOLATION CHECK VALVE														
1-IA-2584	11715-FM -082D	2 OF 3	B5	CHECK VALVE	0.375	NC	AC		CV	C	24			29	
										O	24			29	
									LT	C	24				
	AUX BUILDING CENTRAL AREA EXHAUST DAMPER AIR RECEIVER ISOLATION CHECK VALVE														
1-IA-2585	11715-FM -082D	2 OF 3	A5	CHECK VALVE	0.375	NC	AC		CV	C	24			29	
										O	24			29	
									LT	C	24				
	AUX BUILDING CENTRAL AREA EXHAUST DAMPER AIR RECEIVER ISOLATION CHECK VALVE														
1-IA-RV-110	11715-FM -082A	2 OF 3	F8	RELIEF VALVE	0.25	NC	C		SP	O	120				5
	AIR SUPPLY TO 1-RC-PCV-1455C RELIEF VALVE														
1-IA-RV-111	11715-FM -082A	2 OF 3	F8	RELIEF VALVE	0.25	NC	C		SP	O	120				5
	AIR SUPPLY TO 1-RC-PCV-1456 RELIEF VALVE														
1-IA-SV-105A	11715-FM -082M	1 OF 1	E3	RELIEF VALVE	1	NC	C		SP	O	120				
	MAIN STEAM PCV VALVE AIR ACCUMULATOR RELIEF VALVE														
1-IA-SV-105B	11715-FM -082M	1 OF 1	E4	RELIEF VALVE	1	NC	C		SP	O	120				
	MAIN STEAM PCV VALVE AIR ACCUMULATOR RELIEF VALVE														
1-IA-SV-105C	11715-FM -082M	1 OF 1	E5	RELIEF VALVE	1	NC	C		SP	O	120				
	MAIN STEAM PCV VALVE AIR ACCUMULATOR RELIEF VALVE														
1-IA-SV-105D	11715-FM -082M	1 OF 1	A4	RELIEF VALVE	1	NC	C		SP	O	120				

NORTH ANNA UNIT 1
FOURTH INSERVICE TESTING INTERVAL
VALVE INSERVICE TEST TABLE

VALVE NUMBER	DRAWING NUMBER	SHEET	COOR	VALVE TYPE	VALVE SIZE	ASME CLASS	ISTC CAT	ISO VALVE TYPE	TEST TYPE	TEST POS	TEST FREQ	RE REQ V-	CS JUST CSV-	RR JUST RRV-	NC ALT TEST VNC-
	AUXILIARY FEEDWATER VALVE AIR ACCUMULATOR RELIEF VALVE														
1-IA-SV-105E	11715-FM -082M	1 OF 1	A4	RELIEF VALVE	1	NC	C		SP	O	120				
	AUXILIARY FEEDWATER VALVE AIR ACCUMULATOR RELIEF VALVE														
1-IA-SV-105F	11715-FM -082M	1 OF 1	A7	RELIEF VALVE	1	NC	C		SP	O	120				
	AUXILIARY FEEDWATER VALVE AIR ACCUMULATOR RELIEF VALVE														
1-IA-SV-105G	11715-FM -082M	1 OF 1	A7	RELIEF VALVE	1	NC	C		SP	O	120				
	AUXILIARY FEEDWATER VALVE AIR ACCUMULATOR RELIEF VALVE														
1-IA-SV-105H	11715-FM -082M	1 OF 1	A5	RELIEF VALVE	1	NC	C		SP	O	120				
	AUXILIARY FEEDWATER VALVE AIR ACCUMULATOR RELIEF VALVE														
1-IA-TV-102A	11715-CBM-082N	1 OF 3	D3	AO GLOBE	2	2	B		EV	C	CS		26		
									FS	C	CS		26		
									ST	C	CS		26		
									VP	OC	24				
	INSTRUMENT AIR SUPPLY TO CONTAINMENT, OUTSIDE CONTAINMENT ISOLATION VALVE														
1-IA-TV-102B	11715-CBM-082N	1 OF 3	D3	AO GLOBE	2	2	A	CIV	EV	C	CS		26		
									FS	C	CS		26		
									LT	C	OPB				
									ST	C	CS		26		
									VP	OC	24				
	INSTRUMENT AIR SUPPLY TO CONTAINMENT, OUTSIDE CONTAINMENT ISOLATION VALVE														

NORTH ANNA UNIT 1
FOURTH INSERVICE TESTING INTERVAL
VALVE INSERVICE TEST TABLE

VALVE NUMBER	DRAWING NUMBER	SHEET	COOR	VALVE TYPE	VALVE SIZE	ASME CLASS	ISTC CAT	ISO VALVE TYPE	TEST TYPE	TEST POS	TEST FREQ	RE REQ V-	CS JUST CSV-	RR JUST RRV-	NC ALT TEST VNC-
1-LM-TV-100A	11715-CBM-092A	1 OF 2	E7	AO GLOBE	0.375	2	AE	CIV	LT VP	C OC	OPB 24				
	CONTAINMENT LEAKAGE MONITORING OPEN SYSTEM SUPPLY, OUTSIDE CONTAINMENT ISOLATION VALVE														
1-LM-TV-100B	11715-CBM-092A	1 OF 2	E6	AO GLOBE	0.375	2	AE	CIV	LT VP	C OC	OPB 24				
	CONTAINMENT LEAKAGE MONITORING OPEN SYSTEM SUPPLY, OUTSIDE CONTAINMENT ISOLATION VALVE														
1-LM-TV-100C	11715-CBM-092A	1 OF 2	E6	AO GLOBE	0.375	2	AE	CIV	LT VP	C OC	OPB 24				
	CONTAINMENT LEAKAGE MONITORING OPEN SYSTEM SUPPLY, OUTSIDE CONTAINMENT ISOLATION VALVE														
1-LM-TV-100D	11715-CBM-092A	1 OF 2	E5	AO GLOBE	0.375	2	AE	CIV	LT VP	C OC	OPB 24				
	CONTAINMENT LEAKAGE MONITORING OPEN SYSTEM SUPPLY, OUTSIDE CONTAINMENT ISOLATION VALVE														
1-LM-TV-100E	11715-CBM-092A	1 OF 2	F6	AO GLOBE	0.375	2	AE	CIV	LT VP	C OC	OPB 24				
	CONTAINMENT LEAKAGE MONITORING OPEN SYSTEM SUPPLY, OUTSIDE CONTAINMENT ISOLATION VALVE														
1-LM-TV-100F	11715-CBM-092A	1 OF 2	F5	AO GLOBE	0.375	2	AE	CIV	LT VP	C OC	OPB 24				
	CONTAINMENT LEAKAGE MONITORING OPEN SYSTEM SUPPLY, OUTSIDE CONTAINMENT ISOLATION VALVE														
1-LM-TV-100G	11715-CBM-092A	1 OF 2	E7	AO GLOBE	0.375	2	AE	CIV	LT VP	C OC	OPB 24				
	CONTAINMENT LEAKAGE MONITORING OPEN SYSTEM SUPPLY, OUTSIDE CONTAINMENT ISOLATION VALVE														
1-LM-TV-100H	11715-CBM-092A	1 OF 2	E6	AO GLOBE	0.375	2	AE	CIV	LT VP	C OC	OPB 24				
	CONTAINMENT LEAKAGE MONITORING OPEN SYSTEM SUPPLY, OUTSIDE CONTAINMENT ISOLATION VALVE														

NORTH ANNA UNIT 1
FOURTH INSERVICE TESTING INTERVAL
VALVE INSERVICE TEST TABLE

VALVE NUMBER	DRAWING NUMBER	SHEET	COOR	VALVE TYPE	VALVE SIZE	ASME CLASS	ISTC CAT	ISO VALVE TYPE	TEST TYPE	TEST POS	TEST FREQ	RE REQ V-	CS JUST CSV-	RR JUST RRV-	NC ALT TEST VNC-
1-LM-TV-101A	11715-CBM-092A	1 OF 2	D5	AO GLOBE	0.375	2	AE	CIV	LT VP	C OC	OPB 24				
	CONTAINMENT LEAKAGE MONITORING SEALED SYSTEM SUPPLY, OUTSIDE CONTAINMENT ISOLATION VALVE														
1-LM-TV-101B	11715-CBM-092A	1 OF 2	D5	AO GLOBE	0.375	2	AE	CIV	LT VP	C OC	OPB 24				
	CONTAINMENT LEAKAGE MONITORING SEALED SYSTEM SUPPLY, OUTSIDE CONTAINMENT ISOLATION VALVE														
1-LM-TV-101C	11715-CBM-092A	1 OF 2	D5	AO GLOBE	0.375	2	AE	CIV	LT VP	C OC	OPB 24				
	CONTAINMENT LEAKAGE MONITORING SEALED SYSTEM SUPPLY, OUTSIDE CONTAINMENT ISOLATION VALVE														
1-LM-TV-101D	11715-CBM-092A	1 OF 2	D4	AO GLOBE	0.375	2	AE	CIV	LT VP	C OC	OPB 24				
	CONTAINMENT LEAKAGE MONITORING SEALED SYSTEM SUPPLY, OUTSIDE CONTAINMENT ISOLATION VALVE														

NORTH ANNA UNIT 1
FOURTH INSERVICE TESTING INTERVAL
VALVE INSERVICE TEST TABLE

VALVE NUMBER	DRAWING NUMBER	SHEET	COOR	VALVE TYPE	VALVE SIZE	ASME CLASS	ISTC CAT	ISO VALVE TYPE	TEST TYPE	TEST POS	TEST FREQ	RE REQ V-	CS JUST CSV-	RR JUST RRV-	NC ALT TEST VNC-
1-MS-018	11715-CBM-070B	1 OF 3	C6	MANUAL GATE	3	2	B		EV	C	24				
	MAIN STEAM TO AUXILIARY FEEDWATER TURBINE LINE ISOLATION VALVE														
1-MS-057	11715-CBM-070B	2 OF 3	B6	MANUAL GATE	3	2	B		EV	C	24				
	MAIN STEAM TO AUXILIARY FEEDWATER TURBINE LINE ISOLATION VALVE														
1-MS-095	11715-CBM-070B	3 OF 3	C6	MANUAL GATE	3	2	B		EV	C	24				
	MAIN STEAM TO AUXILIARY FEEDWATER TURBINE LINE ISOLATION VALVE														
1-MS-119	11715-CBM-070A	3 OF 3	E7	CHECK VALVE	3	3	C		CV	C	03				
										O	03				
	"A" MAIN STEAM HEADER SUPPLY CHECK VALVE TO TURBINE DRIVEN AUXILIARY FEEDWATER PUMP														
1-MS-122	11715-CBM-070A	3 OF 3	F7	CHECK VALVE	3	3	C		CV	C	03				
										O	03				
	"B" MAIN STEAM HEADER SUPPLY CHECK VALVE TO TURBINE DRIVEN AUXILIARY FEEDWATER PUMP														
1-MS-124	11715-CBM-070A	3 OF 3	F7	CHECK VALVE	3	3	C		CV	C	03				
										O	03				
	"C" MAIN STEAM HEADER SUPPLY CHECK VALVE TO TURBINE DRIVEN AUXILIARY FEEDWATER PUMP														
1-MS-NRV-101A	11715-CBM-070B	1 OF 3	D3	CHECK VALVE	32	2	C		CV	C	CS		7		
										O	CS	TP-01	7		
									VP	OC	24				
	"A" MAIN STEAM HEADER NON-RETURN VALVE														
1-MS-NRV-101B	11715-CBM-070B	2 OF 3	D3	CHECK VALVE	32	2	C		CV	C	CS		7		
										O	CS	TP-01	7		
									VP	OC	24				
	"B" MAIN STEAM HEADER NON-RETURN VALVE														
1-MS-NRV-101C	11715-CBM-070B	3 OF 3	D3	CHECK VALVE	32	2	C		CV	C	CS		7		
										O	CS	TP-01	7		

NORTH ANNA UNIT 1
FOURTH INSERVICE TESTING INTERVAL
VALVE INSERVICE TEST TABLE

VALVE NUMBER	DRAWING NUMBER	SHEET	COOR	VALVE TYPE	VALVE SIZE	ASME CLASS	ISTC CAT	ISO VALVE TYPE	TEST TYPE	TEST POS	TEST FREQ	RE REQ V-	CS JUST CSV-	RR JUST RRV-	NC ALT TEST VNC-
1-MS-NRV-101C	11715-CBM-070B	3 OF 3	D3	CHECK VALVE	32	2	C		VP	OC	24				
	"C" MAIN STEAM HEADER NON-RETURN VALVE														
1-MS-PCV-101A	11715-CBM-070B	1 OF 3	E5	AO ANGLE	6	2	B		EV	C	RR			33	
									FS	C	RR			33	
									ST	C	NA	2			
									VP	OC	24				
	"A" MAIN STEAM HEADER DISCHARGE TO ATMOSPHERE PRESSURE CONTROL VALVE														
1-MS-PCV-101B	11715-CBM-070B	2 OF 3	E6	AO ANGLE	6	2	B		EV	C	RR			33	
									FS	C	RR			33	
									ST	C	NA	2			
									VP	OC	24				
	"B" MAIN STEAM HEADER DISCHARGE TO ATMOSPHERE PRESSURE CONTROL VALVE														
1-MS-PCV-101C	11715-CBM-070B	3 OF 3	E5	AO ANGLE	6	2	B		EV	C	RR			33	
									FS	C	RR			33	
									ST	C	NA	2			
									VP	OC	24				
	"C" MAIN STEAM HEADER DISCHARGE TO ATMOSPHERE PRESSURE CONTROL VALVE														
1-MS-SV-101A	11715-CBM-070B	1 OF 3	E6	SAFETY	6	2	C		SP	O	60				
	"A" MAIN STEAM HEADER SAFETY VALVE, SV DISCHARGE TO ATMOS														
1-MS-SV-101B	11715-CBM-070B	2 OF 3	D6	SAFETY	6	2	C		SP	O	60				
	"B" MAIN STEAM HEADER SAFETY VALVE, SV DISCHARGE TO ATMOS														
1-MS-SV-101C	11715-CBM-070B	3 OF 3	D6	SAFETY	6	2	C		SP	O	60				
	"C" MAIN STEAM HEADER SAFETY VALVE, SV DISCHARGE TO ATMOS														
1-MS-SV-102A	11715-CBM-070B	1 OF 3	E5	SAFETY	6	2	C		SP	O	60				
	"A" MAIN STEAM HEADER SAFETY VALVE, SV DISCHARGE TO ATMOS														
1-MS-SV-102B	11715-CBM-070B	2 OF 3	D5	SAFETY	6	2	C		SP	O	60				

NORTH ANNA UNIT 1
FOURTH INSERVICE TESTING INTERVAL
VALVE INSERVICE TEST TABLE

VALVE NUMBER	DRAWING NUMBER	SHEET	COOR	VALVE TYPE	VALVE SIZE	ASME CLASS	ISTC CAT	ISO VALVE TYPE	TEST TYPE	TEST POS	TEST FREQ	RE REQ V-	CS JUST CSV-	RR JUST RRV-	NC ALT TEST VNC-
	"B" MAIN STEAM HEADER SAFETY VALVE, SV DISCHARGE TO ATMOS														
1-MS-SV-102C	11715-CBM-070B	3 OF 3	D6	SAFETY	6	2	C		SP	O	60				
	"C" MAIN STEAM HEADER SAFETY VALVE, SV DISCHARGE TO ATMOS														
1-MS-SV-103A	11715-CBM-070B	1 OF 3	E6	SAFETY	6	2	C		SP	O	60				
	"A" MAIN STEAM HEADER SAFETY VALVE, SV DISCHARGE TO ATMOS														
1-MS-SV-103B	11715-CBM-070B	2 OF 3	D5	SAFETY	6	2	C		SP	O	60				
	"B" MAIN STEAM HEADER SAFETY VALVE, SV DISCHARGE TO ATMOS														
1-MS-SV-103C	11715-CBM-070B	3 OF 3	D6	SAFETY	6	2	C		SP	O	60				
	"C" MAIN STEAM HEADER SAFETY VALVE, SV DISCHARGE TO ATMOS														
1-MS-SV-104A	11715-CBM-070B	1 OF 3	E6	SAFETY	6	2	C		SP	O	60				
	"A" MAIN STEAM HEADER SAFETY VALVE, SV DISCHARGE TO ATMOS														
1-MS-SV-104B	11715-CBM-070B	2 OF 3	D6	SAFETY	6	2	C		SP	O	60				
	"B" MAIN STEAM HEADER SAFETY VALVE, SV DISCHARGE TO ATMOS														
1-MS-SV-104C	11715-CBM-070B	3 OF 3	D6	SAFETY	6	2	C		SP	O	60				
	"C" MAIN STEAM HEADER SAFETY VALVE, SV DISCHARGE TO ATMOS														
1-MS-SV-105A	11715-CBM-070B	1 OF 3	E5	SAFETY	6	2	C		SP	O	60				
	"A" MAIN STEAM HEADER SAFETY VALVE, SV DISCHARGE TO ATMOS														
1-MS-SV-105B	11715-CBM-070B	2 OF 3	E5	SAFETY	6	2	C		SP	O	60				
	"B" MAIN STEAM HEADER SAFETY VALVE, SV DISCHARGE TO ATMOS														
1-MS-SV-105C	11715-CBM-070B	3 OF 3	D5	SAFETY	6	2	C		SP	O	60				
	"C" MAIN STEAM HEADER SAFETY VALVE, SV DISCHARGE TO ATMOS														
1-MS-TV-101A	11715-CBM-070B	1 OF 3	D4	AO DISC	32	2	B		EV	C	CS		9		
									FS	C	CS		9		
									ST	C	CS		9		

NORTH ANNA UNIT 1
FOURTH INSERVICE TESTING INTERVAL
VALVE INSERVICE TEST TABLE

VALVE NUMBER	DRAWING NUMBER	SHEET	COOR	VALVE TYPE	VALVE SIZE	ASME CLASS	ISTC CAT	ISO VALVE TYPE	TEST TYPE	TEST POS	TEST FREQ	RE REQ V-	CS JUST CSV-	RR JUST RRV-	NC ALT TEST VNC-
1-MS-TV-101A	11715-CBM-070B	1 OF 3	D4	AO DISC	32	2	B		VP	OC	24				
	"A" MAIN STEAM HEADER TRIP VALVE														
1-MS-TV-101B	11715-CBM-070B	2 OF 3	C4	AO DISC	32	2	B		EV	C	CS		9		
									FS	C	CS		9		
									ST	C	CS		9		
									VP	OC	24				
	"B" MAIN STEAM HEADER TRIP VALVE														
1-MS-TV-101C	11715-CBM-070B	3 OF 3	C4	AO DISC	32	2	B		EV	C	CS		9		
									FS	C	CS		9		
									ST	C	CS		9		
									VP	OC	24				
	"C" MAIN STEAM HEADER TRIP VALVE														
1-MS-TV-109	11715-CBM-070A	1 OF 3	A8	AO GLOBE	3	3	B		EV	C	CS		8		
									FS	C	CS		8		
									ST	C	CS		8		
									VP	OC	24				
	MAIN STEAM HIGH PRESSURE DRAIN ISOLATION TO CONDENSER														
1-MS-TV-110	11715-CBM-070B	3 OF 3	A4	AO GLOBE	1.5	NC	B		EV	C	03				
									FS	C	03				
									ST	C	03				
									VP	OC	24				
	MAIN STEAM HIGH PRESSURE DRAIN HEADER ISOLATION TO STEAM GENERATOR BLOWDOWN SYSTEM														
1-MS-TV-111A	11715-CBM-070A	3 OF 3	E5	AO GLOBE	3	3	B		EV	C	03				
										O	03				
									FS	O	03				
									ST	C	03				
										O	03				
									VP	OC	24				

NORTH ANNA UNIT 1
FOURTH INSERVICE TESTING INTERVAL
VALVE INSERVICE TEST TABLE

VALVE NUMBER	DRAWING NUMBER	SHEET	COOR	VALVE TYPE	VALVE SIZE	ASME CLASS	ISTC CAT	ISO VALVE TYPE	TEST TYPE	TEST POS	TEST FREQ	RE REQ V-	CS JUST CSV-	RR JUST RRV-	NC ALT TEST VNC-
	MAIN STEAM SUPPLY TRIP VALVE TO TURBINE DRIVEN AUXILIARY FEEDWATER PUMP														
1-MS-TV-111B	11715-CBM-070A	3 OF 3	E4	AO GLOBE	3	3	B		EV	C	03				
										O	03				
									FS	O	03				
									ST	C	03				
										O	03				
									VP	OC	24				
	MAIN STEAM SUPPLY TRIP VALVE TO TURBINE DRIVEN AUXILIARY FEEDWATER PUMP														
1-MS-TV-113A	11715-CBM-070B	1 OF 3	D4	AO GLOBE	3	2	B		EV	C	CS		13		
									FS	C	CS		13		
									ST	C	CS		13		
									VP	OC	24				
	"A" MAIN STEAM TRIP BYPASS VALVE														
1-MS-TV-113B	11715-CBM-070B	2 OF 3	D4	AO GLOBE	3	2	B		EV	C	CS		13		
									FS	C	CS		13		
									ST	C	CS		13		
									VP	OC	24				
	"B" MAIN STEAM TRIP BYPASS VALVE														
1-MS-TV-113C	11715-CBM-070B	3 OF 3	D4	AO GLOBE	3	2	B		EV	C	CS		13		
									FS	C	CS		13		
									ST	C	CS		13		
									VP	OC	24				
	"C" MAIN STEAM TRIP BYPASS VALVE														
1-MS-TV-115	11715-CBM-070A	3 OF 3	C4	MECH TRIP	3	3	E		VP	OC	24				
	MAIN STEAM SUPPLY TRIP VALVE TO TURBINE DRIVEN AFW PUMP														

NORTH ANNA UNIT 1
FOURTH INSERVICE TESTING INTERVAL
VALVE INSERVICE TEST TABLE

VALVE NUMBER	DRAWING NUMBER	SHEET	COOR	VALVE TYPE	VALVE SIZE	ASME CLASS	ISTC CAT	ISO VALVE TYPE	TEST TYPE	TEST POS	TEST FREQ	RE REQ V-	CS JUST CSV-	RR JUST RRV-	NC ALT TEST VNC-
1-QS-011	11715-CBM-091A	2 OF 4	D6	WL CHECK	8	2	AC	CIV	CV	C	RR			20	
										O	RR			20	
									LT	C	OPB				
	"A" QUENCH SPRAY PUMP INSIDE CONTAINMENT ISOLATION CHECK VALVE														
1-QS-019	11715-CBM-091A	2 OF 4	E6	WL CHECK	8	2	AC	CIV	CV	C	RR			20	
										O	RR			20	
									LT	C	OPB				
	"B" QUENCH SPRAY PUMP INSIDE CONTAINMENT ISOLATION CHECK VALVE														
1-QS-147	11715-CBM-091A	2 OF 4	B6	CHECK	2	2	AC		CV	C	RR			38	
										O	RR			38	
									LT	C	24				
	QUENCH SPRAY BLEED LINE ISOLATION CHECK VALVE														
1-QS-150	11715-CBM-091A	2 OF 4	B6	CHECK	2	2	AC		CV	C	RR			38	
										O	RR			38	
									LT	C	24				
	QUENCH SPRAY BLEED LINE ISOLATION CHECK VALVE														
1-QS-MOV-100A	11715-CBM-091A	2 OF 4	A3	MO GATE	10	2	E		VP	OC	24				
	"A" QUENCH SPRAY PUMP SUCTION ISOLATION VALVE FROM REFUELING WATER STORAGE TANK														
1-QS-MOV-100B	11715-CBM-091A	2 OF 4	A3	MO GATE	10	2	E		VP	OC	24				
	"B" QUENCH SPRAY PUMP SUCTION ISOLATION VALVE FROM REFUELING WATER STORAGE TANK														
1-QS-MOV-101A	11715-CBM-091A	2 OF 4	D5	MO GATE	8	2	A	CIV	EV	C	03				
										O	03				
									LT	C	OPB				
									ST	C	03				
										O	03				
									VP	OC	24				
	"A" QUENCH SPRAY PUMP DISCHARGE ISOLATION VALVE, OUTSIDE CONTAINMENT ISOLATION VALVE														

NORTH ANNA UNIT 1
FOURTH INSERVICE TESTING INTERVAL
VALVE INSERVICE TEST TABLE

VALVE NUMBER	DRAWING NUMBER	SHEET	COOR	VALVE TYPE	VALVE SIZE	ASME CLASS	ISTC CAT	ISO VALVE TYPE	TEST TYPE	TEST POS	TEST FREQ	RE REQ V-	CS JUST CSV-	RR JUST RRV-	NC ALT TEST VNC-
1-QS-MOV-101B	11715-CBM-091A	2 OF 4	E5	MO GATE	8	2	A	CIV	EV	C	03				
										O	03				
									LT	C	OPB				
									ST	C	03				
										O	03				
									VP	OC	24				
	"B" QUENCH SPRAY PUMP DISCHARGE ISOLATION VALVE, OUTSIDE CONTAINMENT ISOLATION VALVE														
1-QS-MOV-102A	11715-CBM-091A	1 OF 4	D5	MO GATE	6	2	B		EV	O	CS		16		
									ST	O	CS		16		
									VP	OC	24				
	CHEMICAL ADDITION TANK DISCHARGE ISOLATION VALVE														
1-QS-MOV-102B	11715-CBM-091A	1 OF 4	D6	MO GATE	6	2	B		EV	O	CS		16		
									ST	O	CS		16		
									VP	OC	24				
	CHEMICAL ADDITION TANK DISCHARGE ISOLATION VALVE														

NORTH ANNA UNIT 1
FOURTH INSERVICE TESTING INTERVAL
VALVE INSERVICE TEST TABLE

VALVE NUMBER	DRAWING NUMBER	SHEET	COOR	VALVE TYPE	VALVE SIZE	ASME CLASS	ISTC CAT	ISO VALVE TYPE	TEST TYPE	TEST POS	TEST FREQ	RE REQ V-	CS JUST CSV-	RR JUST RRV-	NC ALT TEST VNC-
1-RC-149	11715-CBM-093B	2 OF 3	D7	CHECK VALVE	3	2	AC	CIV	CV	C	RR			6	
										O	RR			6	
									LT	C	OPB				
	PRIMARY GRADE WATER SUPPLY TO PRT-#2 RCP SEAL STANDPIPES/FLUSH CONNECT, INSIDE CONT ISO VLV														
1-RC-176	11715-CBM-093B	1 OF 3	A4	MANUAL	0.125	1	AE	CIV	LT	C	OPB				
	PRESSURIZER PRESSURE DEAD WEIGHT TESTER ISOLATION, OUTSIDE CONT ISOLATION VALVE														
1-RC-178	11715-CBM-093B	1 OF 3	A3	MANUAL	0.125	1	AE	CIV	LT	C	OPB				
	PRESSURIZER PRESSURE DEAD WEIGHT TESTER ISOLATION, OUTSIDE CONT ISOLATION VALVE														
1-RC-HCV-1556A	11715-CBM-093A	1 OF 3	D7	AO GLOBE	2	1	E		VP	OC	24				
	RCS LOOP FILL BOUNDARY VALVE														
1-RC-HCV-1556B	11715-CBM-093A	2 OF 3	D8	AO GLOBE	2	1	E		VP	OC	24				
	RCS LOOP FILL BOUNDARY VALVE														
1-RC-HCV-1556C	11715-CBM-093A	3 OF 3	D3	AO GLOBE	2	1	E		VP	OC	24				
	RCS LOOP FILL BOUNDARY VALVE														
1-RC-MOV-1535	11715-CBM-093B	1 OF 3	E4	MO GATE	3	1	B		EV	C	03				
										O	03				
									ST	C	03				
										O	03				
									VP	OC	24				
	BLOCK VALVE FOR PRESSURIZER POWER OPERATED RELIEF VALVE														
1-RC-MOV-1536	11715-CBM-093B	1 OF 3	D4	MO GATE	3	1	B		EV	C	03				
										O	03				
									ST	C	03				
										O	03				
									VP	OC	24				
	BLOCK VALVE FOR PRESSURIZER POWER OPERATED RELIEF VALVE														

NORTH ANNA UNIT 1
FOURTH INSERVICE TESTING INTERVAL
VALVE INSERVICE TEST TABLE

VALVE NUMBER	DRAWING NUMBER	SHEET	COOR	VALVE TYPE	VALVE SIZE	ASME CLASS	ISTC CAT	ISO VALVE TYPE	TEST TYPE	TEST POS	TEST FREQ	RE REQ V-	CS JUST CSV-	RR JUST RRV-	NC ALT TEST VNC-
1-RC-PCV-1455C	11715-CBM-093B	1 OF 3	D3	AO GLOBE	3	1	BC		EV	C	CS		14		
										O	CS		14		
									FS	C	CS		14		
									ST	C	CS		14		
										O	CS		14		
									VP	OC	24				
	PRESSURIZER POWER OPERATED PRESSURE CONTROL VALVE DISCHARGE TO PRESSURIZER RELIEF TANK														
1-RC-PCV-1456	11715-CBM-093B	1 OF 3	E3	AO GLOBE	3	1	BC		EV	C	CS		14		
										O	CS		14		
									FS	C	CS		14		
									ST	C	CS		14		
										O	CS		14		
									VP	OC	24				
	PRESSURIZER POWER OPERATED PRESSURE CONTROL VALVE DISCHARGE TO PRESSURIZER RELIEF TANK														
1-RC-SOV-101A-1	11715-CBM-093A	3 OF 3	B5	SO GLOBE	1	1	B		EV	C	CS		19		
										O	CS		19		
									FS	C	CS		19		
									ST	C	CS		19		
										O	CS		19		
									VP	OC	24				
	REACTOR VESSEL VENT LINE ISOLATION VALVE TO REFUELING														
1-RC-SOV-101A-2	11715-CBM-093A	3 OF 3	A5	SO GLOBE	1	1	B		EV	C	CS		19		
										O	CS		19		
									FS	C	CS		19		
									ST	C	CS		19		
										O	CS		19		
									VP	OC	24				
	REACTOR VESSEL VENT LINE ISOLATION VALVE TO REFUELING														

NORTH ANNA UNIT 1
FOURTH INSERVICE TESTING INTERVAL
VALVE INSERVICE TEST TABLE

VALVE NUMBER	DRAWING NUMBER	SHEET	COOR	VALVE TYPE	VALVE SIZE	ASME CLASS	ISTC CAT	ISO VALVE TYPE	TEST TYPE	TEST POS	TEST FREQ	RE REQ V-	CS JUST CSV-	RR JUST RRV-	NC ALT TEST VNC-
1-RC-SOV-101B-1	11715-CBM-093A	3 OF 3	B5	SO GLOBE	1	1	B		EV	C	CS		19		
										O	CS		19		
									FS	C	CS		19		
									ST	C	CS		19		
										O	CS		19		
									VP	OC	24				
	REACTOR VESSEL VENT LINE ISOLATION VALVE TO REFUELING														
1-RC-SOV-101B-2	11715-CBM-093A	3 OF 3	A5	SO GLOBE	1	1	B		EV	C	CS		19		
										O	CS		19		
									FS	C	CS		19		
									ST	C	CS		19		
										O	CS		19		
									VP	OC	24				
	REACTOR VESSEL VENT LINE ISOLATION VALVE TO REFUELING														
1-RC-SV-1551A	11715-CBM-093B	1 OF 3	F5	SAFETY	6	1	C		SP	O	60				
	PRESSURIZER SAFETY VALVE, SV DISCHARGE TO PRESSURIZER RELIEF TANK														
1-RC-SV-1551B	11715-CBM-093B	1 OF 3	F5	SAFETY	6	1	C		SP	O	60				
	PRESSURIZER SAFETY VALVE, SV DISCHARGE TO PRESSURIZER RELIEF TANK														
1-RC-SV-1551C	11715-CBM-093B	1 OF 3	F6	SAFETY	6	1	C		SP	O	60				
	PRESSURIZER SAFETY VALVE, SV DISCHARGE TO PRESSURIZER RELIEF TANK														
1-RC-TV-1519A	11715-CBM-093B	2 OF 3	D8	AO DIAPHRAGM	3	2	A	CIV	EV	C	03				
									FS	C	03				
									LT	C	OPB				
									ST	C	03				
									VP	OC	24				
	PRIMARY GRADE WATER SUPPLY TO PRT-#2 RCP SEAL STANDPIPES & FLUSH CONNECT, OUT CONT ISO VLV														

NORTH ANNA UNIT 1
FOURTH INSERVICE TESTING INTERVAL
VALVE INSERVICE TEST TABLE

VALVE NUMBER	DRAWING NUMBER	SHEET	COOR	VALVE TYPE	VALVE SIZE	ASME CLASS	ISTC CAT	ISO VALVE TYPE	TEST TYPE	TEST POS	TEST FREQ	RE REQ V-	CS JUST CSV-	RR JUST RRV-	NC ALT TEST VNC-
1-RH-007	11715-CBM-094A	1 OF 2	E5	CHECK VALVE	10	2	C		CV	C	CS		17		
										O	CS		17		
	"B" RHR PUMP DISCHARGE CHECK VALVE														
1-RH-015	11715-CBM-094A	1 OF 2	E7	CHECK VALVE	10	2	C		CV	C	CS		17		
										O	CS		17		
	"A" RHR PUMP DISCHARGE CHECK VALVE														
1-RH-036	11715-CBM-094A	2 OF 2	C4	MANUAL GATE	6	2	AE	CIV	LT	C	OPB				
	RHR SUPPLY ISOLATION TO REFUEL WATER STORAGE TANK, INSIDE CONTAINMENT ISOLATION VALVE														
1-RH-037	11715-CBM-094A	2 OF 2	E3	MANUAL GATE	6	2	AE	CIV	LT	C	OPB				
	RHR SUPPLY ISOLATION TO REFUEL WATER STORAGE TANK, OUTSIDE CONTAINMENT ISOLATION VALVE														
1-RH-MOV-1700	11715-CBM-094A	1 OF 2	A5	MO GATE	14	1	B		EV	O	RR			35	
									ST	O	RR			35	
									VP	OC	24				
	RHR PUMP SUPPLY ISOLATION FROM "A" HOT LEG, INSIDE MISSILE BARRIER														
1-RH-MOV-1701	11715-CBM-094A	1 OF 2	A4	MO GATE	14	1	B		EV	O	RR			35	
									ST	O	RR			35	
									VP	OC	24				
	RHR PUMP SUPPLY ISOLATION FROM "A" HOT LEG, OUTSIDE MISSILE BARRIER														
1-RH-MOV-1720A	11715-CBM-094A	2 OF 2	C3	MO GATE	10	1	B		EV	O	RR			35	
									ST	O	RR			35	
									VP	OC	24				
	RHR RETURN ISOLATION TO "B" ACCUMULATOR DISCHARGE LINE														
1-RH-MOV-1720B	11715-CBM-094A	2 OF 2	B3	MO GATE	10	1	B		EV	O	RR			35	
									ST	O	RR			35	
									VP	OC	24				
	RHR RETURN ISOLATION TO "C" ACCUMULATOR DISCHARGE LINE														

NORTH ANNA UNIT 1
FOURTH INSERVICE TESTING INTERVAL
VALVE INSERVICE TEST TABLE

VALVE NUMBER	DRAWING NUMBER	SHEET	COOR	VALVE TYPE	VALVE SIZE	ASME CLASS	ISTC CAT	ISO VALVE TYPE	TEST TYPE	TEST POS	TEST FREQ	RE REQ V-	CS JUST CSV-	RR JUST RRV-	NC ALT TEST VNC-
1-RH-RV-1721A	11715-CBM-094A RHR SYSTEM RELIEF VALVE AT "A" RHR PUMP SUCTION, RV DISCHARGE TO PRESSURIZER RELIEF TANK	1 OF 2	E6	RELIEF VALVE	3	2	C		SP	O	120	3			
1-RH-RV-1721B	11715-CBM-094A RHR SYSTEM RELIEF VALVE AT "B" RHR PUMP SUCTION, RV DISCHARGE TO PRESSURIZER RELIEF TANK	1 OF 2	E4	RELIEF VALVE	3	2	C		SP	O	120	3			

NORTH ANNA UNIT 1
FOURTH INSERVICE TESTING INTERVAL
VALVE INSERVICE TEST TABLE

VALVE NUMBER	DRAWING NUMBER	SHEET	COOR	VALVE TYPE	VALVE SIZE	ASME CLASS	ISTC CAT	ISO VALVE TYPE	TEST TYPE	TEST POS	TEST FREQ	RE REQ V-	CS JUST CSV-	RR JUST RRV-	NC ALT TEST VNC-
1-RM-TV-100A	11715-CBM-082N	3 OF 3	C5	AO GLOBE	1	2	A	CIV	EV	C	03				
									FS	C	03				
									LT	C	OPB				
									ST	C	03				
									VP	OC	24				
	RETURN ISOLATION FROM AIR RADIATION MONITOR TO CONTAINMENT, OUTSIDE CONT ISOLATION VALVE														
1-RM-TV-100B	11715-CBM-082N	3 OF 3	D5	AO GLOBE	1	2	A	CIV	EV	C	03				
									FS	C	03				
									LT	C	OPB				
									ST	C	03				
									VP	OC	24				
	SUPPLY ISOL TO AIR RAD MONITOR FROM CONTAINMENT VENT DUCT, OUTSIDE CONT ISOLATION VALVE														
1-RM-TV-100C	11715-CBM-082N	3 OF 3	D4	AO GLOBE	1	2	A	CIV	EV	C	03				
									FS	C	03				
									LT	C	OPB				
									ST	C	03				
									VP	OC	24				
	SUPPLY ISOL TO AIR RAD MONITOR FROM CONTAINMENT VENT DUCT, INSIDE CONT ISOLATION VALVE														
1-RM-TV-100D	11715-CBM-082N	3 OF 3	C5	AO GLOBE	1	2	B		EV	C	03				
									FS	C	03				
									ST	C	03				
									VP	OC	24				
	RETURN ISOL FROM AIR RADIATION MONITOR TO CONTAINMENT, OUTSIDE CONT ISOLATION VALVE														

NORTH ANNA UNIT 1
FOURTH INSERVICE TESTING INTERVAL
VALVE INSERVICE TEST TABLE

VALVE NUMBER	DRAWING NUMBER	SHEET	COOR	VALVE TYPE	VALVE SIZE	ASME CLASS	ISTC CAT	ISO VALVE TYPE	TEST TYPE	TEST POS	TEST FREQ	RE REQ V-	CS JUST CSV-	RR JUST RRV-	NC ALT TEST VNC-
1-RP-006	11715-CBM-088A REFUELING PURIFICATION FROM REACTOR CAVITY TO RP PUMPS, INSIDE CONT ISOLATION VALVE	2 OF 4	C6	MANUAL DIA	6	2	AE	CIV	LT	C	OPB				
1-RP-008	11715-CBM-088A REFUELING PURIFICATION FROM REACTOR CAVITY TO RP PUMPS, OUTSIDE CONT ISOLATION VALVE	2 OF 4	C4	MANUAL DIA	6	2	AE	CIV	LT	C	OPB				
1-RP-026	11715-CBM-088A REFUELING PURIFICATION FROM RP PUMPS TO REACTOR CAVITY, OUTSIDE CONT ISOLATION VALVE	2 OF 4	C4	MANUAL DIA	6	2	AE	CIV	LT	C	OPB				
1-RP-028	11715-CBM-088A REFUELING PURIFICATION FROM RP PUMPS TO REACTOR CAVITY, INSIDE CONT ISOLATION VALVE	2 OF 4	D5	MANUAL DIA	6	2	AE	CIV	LT	C	OPB				

NORTH ANNA UNIT 1
FOURTH INSERVICE TESTING INTERVAL
VALVE INSERVICE TEST TABLE

VALVE NUMBER	DRAWING NUMBER	SHEET	COOR	VALVE TYPE	VALVE SIZE	ASME CLASS	ISTC CAT	ISO VALVE TYPE	TEST TYPE	TEST POS	TEST FREQ	RE REQ V-	CS JUST CSV-	RR JUST RRV-	NC ALT TEST VNC-
1-RS-018	11715-CBM-091A	4 OF 4	D6	WL CHECK	10	2	C		CV	C	RR			20	
										O	RR			20	
	"A" OUTSIDE RECIRC SPRAY PUMP INSIDE CONTAINMENT ISOLATION CHECK VALVE														
1-RS-027	11715-CBM-091A	4 OF 4	D6	WL CHECK	10	2	C		CV	C	RR			20	
										O	RR			20	
	"B" OUTSIDE RECIRC SPRAY PUMP INSIDE CONTAINMENT ISOLATION CHECK VALVE														
1-RS-123	11715-CBM-091B	1 OF 1	E7	CHECK VALVE	8	2	C		CV	C	RR			25	
										O	RR			25	
	"A" CASING COOLING PUMP DISCHARGE CHECK VALVE TO "A" OUTSIDE RECIRC SPRAY PUMP SUCT														
1-RS-138	11715-CBM-091B	1 OF 1	F7	CHECK VALVE	8	2	C		CV	C	RR			25	
										O	RR			25	
	"B" CASING COOLING PUMP DISCHARGE CHECK VALVE TO "B" OUTSIDE RECIRC SPRAY PUMP SUCT														
1-RS-MOV-100A	11715-CBM-091B	1 OF 1	E7	MO GATE	8	2	B		EV	C	03				
										O	03				
									ST	C	03				
										O	03				
									VP	OC	24				
	"A" CASING COOLING PUMP DISCHARGE ISOLATION TO "A" OUTSIDE RECIRC SPRAY PUMP SUCTION														
1-RS-MOV-100B	11715-CBM-091B	1 OF 1	F7	MO GATE	6	2	B		EV	C	03				
										O	03				
									ST	C	03				
										O	03				
									VP	OC	24				

NORTH ANNA UNIT 1
FOURTH INSERVICE TESTING INTERVAL
VALVE INSERVICE TEST TABLE

VALVE NUMBER	DRAWING NUMBER	SHEET	COOR	VALVE TYPE	VALVE SIZE	ASME CLASS	ISTC CAT	ISO VALVE TYPE	TEST TYPE	TEST POS	TEST FREQ	RE REQ V-	CS JUST CSV-	RR JUST RRV-	NC ALT TEST VNC-
	"B" CASING COOLING PUMP DISCHARGE ISOLATION TO "B" OUTSIDE RECIRC SPRAY PUMP SUCTION														
1-RS-MOV-101A	11715-CBM-091B	1 OF 1	E7	MO GATE	6	3	B		EV	C	03				
										O	03				
									ST	C	03				
										O	03				
									VP	OC	24				
	"A" CASING COOLING PUMP DISCHARGE ISOLATION TO "A" OUTSIDE RECIRC SPRAY PUMP SUCTION														
1-RS-MOV-101B	11715-CBM-091B	1 OF 1	F7	MO GATE	6	3	B		EV	C	03				
										O	03				
									ST	C	03				
										O	03				
									VP	OC	24				
	"B" CASING COOLING PUMP DISCHARGE ISOLATION TO "B" OUTSIDE RECIRC SPRAY PUMP SUCTION														
1-RS-MOV-155A	11715-CBM-091A	4 OF 4	B6	MO GATE	12	2	B		EV	C	03				
										O	03				
									ST	C	03				
										O	03				
									VP	OC	24				
	"A" OUTSIDE RECIRC SPRAY PUMP SUCTION ISOLAT VALVE FROM CONTAINMENT SUMP & CASING COOLING														
1-RS-MOV-155B	11715-CBM-091A	4 OF 4	A6	MO GATE	12	2	B		EV	C	03				
										O	03				
									ST	C	03				
										O	03				
									VP	OC	24				
	"B" OUTSIDE RECIRC SPRAY PUMP SUCTION ISOLAT VALVE FROM CONTAINMENT SUMP & CASING COOLING														
1-RS-MOV-156A	11715-CBM-091A	4 OF 4	D5	MO GATE	10	2	B		EV	C	03				

NORTH ANNA UNIT 1
FOURTH INSERVICE TESTING INTERVAL
VALVE INSERVICE TEST TABLE

VALVE NUMBER	DRAWING NUMBER	SHEET	COOR	VALVE TYPE	VALVE SIZE	ASME CLASS	ISTC CAT	ISO VALVE TYPE	TEST TYPE	TEST POS	TEST FREQ	RE REQ V-	CS JUST CSV-	RR JUST RRV-	NC ALT TEST VNC-
1-RS-MOV-156A	11715-CBM-091A	4 OF 4	D5	MO GATE	10	2	B		EV	O	03				
									ST	C	03				
										O	03				
									VP	OC	24				
	"A" OUTSIDE RECIRC SPRAY PUMP DISCHARGE ISOLATION, OUTSIDE CONTAINMENT ISOLATION VALVE														
1-RS-MOV-156B	11715-CBM-091A	4 OF 4	D5	MO GATE	10	2	B		EV	C	03				
										O	03				
									ST	C	03				
										O	03				
									VP	OC	24				
	"B" OUTSIDE RECIRC SPRAY PUMP DISCHARGE ISOLATION, OUTSIDE CONTAINMENT ISOLATION VALVE														

NORTH ANNA UNIT 1
FOURTH INSERVICE TESTING INTERVAL
VALVE INSERVICE TEST TABLE

VALVE NUMBER	DRAWING NUMBER	SHEET	COOR	VALVE TYPE	VALVE SIZE	ASME CLASS	ISTC CAT	ISO VALVE TYPE	TEST TYPE	TEST POS	TEST FREQ	RE REQ V-	CS JUST CSV-	RR JUST RRV-	NC ALT TEST VNC-
1-SA-002	11715-CBM-082F	1 OF 1	C7	MANUAL GATE	2	2	AE	CIV	LT	C	OPB				
	SERVICE AIR SUPPLY TO UNIT 1 CONTAINMENT, INSIDE CONTAINMENT ISOLATION VALVE														
1-SA-029	11715-CBM-082F	1 OF 1	B7	MANUAL GLOBE	2	2	AE	CIV	LT	C	OPB				
	SERVICE AIR SUPPLY TO UNIT 1 CONTAINMENT, OUTSIDE CONTAINMENT ISOLATION VALVE														

NORTH ANNA UNIT 1
FOURTH INSERVICE TESTING INTERVAL
VALVE INSERVICE TEST TABLE

VALVE NUMBER	DRAWING NUMBER	SHEET	COOR	VALVE TYPE	VALVE SIZE	ASME CLASS	ISTC CAT	*ISO* VALVE TYPE	TEST TYPE	TEST POS	TEST FREQ	*RE* REQ V-	*CS* JUST CSV-	RR JUST RRV-	*NC ALT* TEST VNC-
1-SI-001	11715-CBM-096A	1 OF 3	B7	CHECK VALVE	12	2	C		CV	C	RR			26	
										O	RR			26	
	"A" LOW HEAD SI PUMP SUCTION CHECK VALVE FROM CONTAINMENT SUMP														
1-SI-004	11715-CBM-096A	1 OF 3	C7	CHECK VALVE	0.75	2	AC		CV	C	RR			17	
										O	RR			17	
									LT	C	24				
	"A" LOW HEAD SI PUMP SEAL WATER SUPPLY CHECK VALVE FROM														
1-SI-009	11715-CBM-096A	2 OF 3	B6	CHECK VALVE	10	2	C		CV	C	RR			7	
										O	RR			7	
	"A" LOW HEAD SI PUMP DISCHARGE CHECK VALVE														
1-SI-012	11715-CBM-096A	2 OF 3	B5	CHECK VALVE	2	2	C		CV	C	RR			7	
										O	03				
	"A" LOW HEAD SI PUMP MINIMUM FLOW/TEST LINE DISCHARGE CHECK VALVE														
1-SI-016	11715-CBM-096A	1 OF 3	B5	CHECK VALVE	12	2	C		CV	C	RR			26	
										O	RR			26	
	"B" LOW HEAD SI PUMP SUCTION CHECK VALVE FROM CONTAINMENT SUMP														
1-SI-018	11715-CBM-096A	1 OF 3	B3	CHECK VALVE	12	2	C		CV	C	RR			7	
										O	RR			7	
	RWST SUPPLY CHECK VALVE TO "B" LOW HEAD SI PUMP SUCTION														
1-SI-021	11715-CBM-096A	1 OF 3	C5	CHECK VALVE	0.75	2	AC		CV	C	RR			17	
										O	RR			17	
									LT	C	24				
	"B" LOW HEAD SI PUMP SEAL WATER SUPPLY CHECK VALVE														
1-SI-026	11715-CBM-096A	2 OF 3	B4	CHECK VALVE	10	2	C		CV	C	RR			7	
										O	RR			7	
	"B" LOW HEAD SI PUMP DISCHARGE CHECK VALVE														

NORTH ANNA UNIT 1
FOURTH INSERVICE TESTING INTERVAL
VALVE INSERVICE TEST TABLE

VALVE NUMBER	DRAWING NUMBER	SHEET	COOR	VALVE TYPE	VALVE SIZE	ASME CLASS	ISTC CAT	ISO VALVE TYPE	TEST TYPE	TEST POS	TEST FREQ	RE REQ V-	CS JUST CSV-	RR JUST RRV-	NC ALT TEST VNC-
1-SI-029	11715-CBM-096A	2 OF 3	B4	CHECK VALVE	2	2	C		CV	C	RR			7	
										O	03				
	"B" LOW HEAD SI PUMP MINIMUM FLOW/TEST LINE DISCHARGE CHECK VALVE														
1-SI-047	11715-CBM-096A	1 OF 3	E5	CHECK VALVE	8	2	AC		CV	C	RR			8	
										O	RR			8	
									LT	C	24	1			
	RWST SUPPLY CHECK VALVE TO CHARGING PUMP SUCTION HEADER														
1-SI-058	11715-CBM-096A	1 OF 3	E7	MANUAL GLOBE	1	2	AE	CIV	LT	C	OPB				
	ACCUMULATOR MAKEUP LINE, OUTSIDE CONTAINMENT ISOLATION VALVE														
1-SI-066	11715-CBM-096A	3 OF 3	D4	CHECK VALVE	1	2	C		CV	C	RR			23	
										O	RR	TP-01		23	
	BORON INJECTION TANK SUPPLY CHECK VALVE FROM BORIC ACID TRANSFER PUMPS														
1-SI-079	11715-CBM-096B	4 OF 4	E3	CHECK VALVE	3	1	C		CV	C	RR			12	
										O	RR			12	
	HIGH HEAD SI FROM CHARGING PUMPS TO RCS COLD LEGS, INSIDE CONT ISOLATION CHECK VALVE														
1-SI-083	11715-CBM-096B	4 OF 4	F8	CHECK VALVE	6	1	AC	PIV	CV	C	RR			10	
										O	RR			10	
									LT	C	24				
	"A" RCS COLD LEG SI ADMISSION CHECK VALVE														
1-SI-086	11715-CBM-096B	4 OF 4	E8	CHECK VALVE	6	1	AC	PIV	CV	C	RR			10	
										O	RR			10	
									LT	C	24				

NORTH ANNA UNIT 1
FOURTH INSERVICE TESTING INTERVAL
VALVE INSERVICE TEST TABLE

VALVE NUMBER	DRAWING NUMBER	SHEET	COOR	VALVE TYPE	VALVE SIZE	ASME CLASS	ISTC CAT	ISO VALVE TYPE	TEST TYPE	TEST POS	TEST FREQ	RE REQ V-	CS JUST CSV-	RR JUST RRV-	NC ALT TEST VNC-
	"B" RCS COLD LEG SI ADMISSION CHECK VALVE														
1-SI-089	11715-CBM-096B	4 OF 4	D8	CHECK VALVE	6	1	AC	PIV	CV	C	RR			10	
										O	RR			10	
									LT	C	24				
	"C" RCS COLD LEG SI ADMISSION CHECK VALVE														
1-SI-090	11715-CBM-096B	4 OF 4	C3	CHECK VALVE	3	1	C		CV	C	RR			12	
										O	RR			12	
	HIGH HEAD SI FROM CHARGING PUMPS TO RCS HOT LEGS, INSIDE CONT ISOLATION CHECK VALVE														
1-SI-095	11715-CBM-096B	4 OF 4	D8	CHECK VALVE	6	1	C		CV	C	RR			12	
										O	RR			12	
	"B" RCS HOT LEG SI ADMISSION CHECK VALVE														
1-SI-099	11715-CBM-096B	4 OF 4	C8	CHECK VALVE	6	1	C		CV	C	RR			12	
										O	RR			12	
	"A" RCS HOT LEG SI ADMISSION CHECK VALVE														
1-SI-103	11715-CBM-096B	4 OF 4	B8	CHECK VALVE	6	1	C		CV	C	RR			12	
										O	RR			12	
	"C" RCS HOT LEG SI ADMISSION CHECK VALVE														
1-SI-106	11715-CBM-096B	1 OF 4	F4	CHECK VALVE	1	2	AC	CIV	CV	C	RR			9	
										O	RR	TP-01		9	
									LT	C	OPB				
	NITROGEN SUPPLY TO ACCUMULATORS, INSIDE CONTAINMENT ISOLATION CHECK VALVE														
1-SI-110	11715-CBM-096B	1 OF 4	D4	CHECK VALVE	1	2	AC	CIV	CV	C	RR			9	
										O	RR	TP-01		9	
									LT	C	OPB				
	ACCUMULATOR MAKE UP LINE, INSIDE CONTAINMENT ISOLATION CHECK VALVE														

NORTH ANNA UNIT 1
FOURTH INSERVICE TESTING INTERVAL
VALVE INSERVICE TEST TABLE

VALVE NUMBER	DRAWING NUMBER	SHEET	COOR	VALVE TYPE	VALVE SIZE	ASME CLASS	ISTC CAT	ISO VALVE TYPE	TEST TYPE	TEST POS	TEST FREQ	RE REQ V-	CS JUST CSV-	RR JUST RRV-	NC ALT TEST VNC-
1-SI-125	11715-CBM-096B	1 OF 4	B7	CHECK VALVE	12	1	C		CV	C	RR			11	
										O	RR			11	
	"A" ACCUMULATOR DISCHARGE CHECK VALVE														
1-SI-127	11715-CBM-096B	1 OF 4	B8	CHECK VALVE	12	1	C		CV	C	RR			11	
										O	RR			11	
	"A" ACCUMULATOR COLD LEG ADMISSION CHECK VALVE														
1-SI-142	11715-CBM-096B	2 OF 4	B5	CHECK VALVE	12	1	C		CV	C	RR			11	
										O	RR			11	
	"B" ACCUMULATOR DISCHARGE CHECK VALVE														
1-SI-144	11715-CBM-096B	2 OF 4	B7	CHECK VALVE	12	1	C		CV	C	RR			11	
										O	RR			11	
	"B" ACCUMULATOR COLD LEG ADMISSION CHECK VALVE														
1-SI-159	11715-CBM-096B	3 OF 4	B5	CHECK VALVE	12	1	C		CV	C	RR			11	
										O	RR			11	
	"C" ACCUMULATOR DISCHARGE CHECK VALVE														
1-SI-161	11715-CBM-096B	3 OF 4	B7	CHECK VALVE	12	1	C		CV	C	RR			11	
										O	RR			11	
	"C" ACCUMULATOR COLD LEG ADMISSION CHECK VALVE														
1-SI-185	11715-CBM-096B	4 OF 4	F3	CHECK VALVE	3	1	C		CV	C	RR			12	
										O	RR			12	
	HIGH HEAD SI FROM CHARGING PUMPS TO RCS COLD LEGS, INSIDE CONT ISOLATION CHECK VALVE														
1-SI-190	11715-CBM-096B	4 OF 4	F7	CHECK VALVE	2	1	C		CV	C	RR			13	
										O	RR			13	
	HIGH HEAD SI TO "A" RCS COLD LEG, INSIDE MISSILE BARRIER CHECK VALVE														
1-SI-192	11715-CBM-096B	4 OF 4	E7	CHECK VALVE	2	1	C		CV	C	RR			13	

NORTH ANNA UNIT 1
FOURTH INSERVICE TESTING INTERVAL
VALVE INSERVICE TEST TABLE

VALVE NUMBER	DRAWING NUMBER	SHEET	COOR	VALVE TYPE	VALVE SIZE	ASME CLASS	ISTC CAT	ISO VALVE TYPE	TEST TYPE	TEST POS	TEST FREQ	RE REQ V-	CS JUST CSV-	RR JUST RRV-	NC ALT TEST VNC-
1-SI-192	11715-CBM-096B	4 OF 4	E7	CHECK VALVE	2	1	C		CV	O	RR			13	
	HIGH HEAD SI TO "B" RCS COLD LEG, INSIDE MISSILE BARRIER CHECK VALVE														
1-SI-194	11715-CBM-096B	4 OF 4	D7	CHECK VALVE	2	1	C		CV	C	RR			13	
										O	RR			13	
	HIGH HEAD SI TO "C" RCS COLD LEG, INSIDE MISSILE BARRIER CHECK VALVE														
1-SI-195	11715-CBM-096B	4 OF 4	F6	CHECK VALVE	6	1	AC	PIV	CV	C	RR			10	
										O	RR			10	
									LT	C	24				
	LOW HEAD SI TO "A" RCS COLD LEG, INSIDE CON- TAINMENT ISOLATION CHECK VALVE														
1-SI-197	11715-CBM-096B	4 OF 4	E6	CHECK VALVE	6	1	AC	PIV	CV	C	RR			10	
										O	RR			10	
									LT	C	24				
	LOW HEAD SI TO B RCS COLD LEG, INSIDE CONTAINMENT ISOLATION CHECK VALVE														
1-SI-199	11715-CBM-096B	4 OF 4	D6	CHECK VALVE	6	1	AC	PIV	CV	C	RR			10	
										O	RR			10	
									LT	C	24				
	LOW HEAD SI TO "C" RCS COLD LEG, INSIDE CONTAINMENT ISOLATION CHECK VALVE														
1-SI-201	11715-CBM-096B	4 OF 4	D3	CHECK VALVE	3	1	C		CV	C	RR			12	
										O	RR			12	
	HIGH HEAD SI FROM CHARGING PUMPS TO RCS HOT LEGS, INSIDE CONT ISOLATION CHECK VALVE														
1-SI-206	11715-CBM-096B	4 OF 4	B3	CHECK VALVE	6	1	C		CV	C	RR			12	
										O	RR			12	
	LOW HEAD SI FROM "A" LHSI PUMP TO RCS HOT LEGS, INSIDE CONT ISOLATION CHECK VALVE														

NORTH ANNA UNIT 1
FOURTH INSERVICE TESTING INTERVAL
VALVE INSERVICE TEST TABLE

VALVE NUMBER	DRAWING NUMBER	SHEET	COOR	VALVE TYPE	VALVE SIZE	ASME CLASS	ISTC CAT	ISO VALVE TYPE	TEST TYPE	TEST POS	TEST FREQ	RE REQ V-	CS JUST CSV-	RR JUST RRV-	NC ALT TEST VNC-
1-SI-207	11715-CBM-096B	4 OF 4	B3	CHECK VALVE	6	1	C		CV	C	RR			12	
										O	RR			12	
	LOW HEAD SI FROM "B" LHSI PUMP TO RCS HOT LEGS, INSIDE CONT ISOLATION CHECK VALVE														
1-SI-209	11715-CBM-096B	4 OF 4	C7	CHECK VALVE	6	1	C		CV	C	RR			12	
										O	RR			12	
	LOW HEAD SAFETY INJECTION SUPPLY CHECK VALVE TO "A" RCS HOT LEG														
1-SI-211	11715-CBM-096B	4 OF 4	C7	CHECK VALVE	6	1	C		CV	C	RR			12	
										O	RR			12	
	LOW HEAD SAFETY INJECTION SUPPLY CHECK VALVE TO "B" RCS HOT LEG														
1-SI-213	11715-CBM-096B	4 OF 4	B7	CHECK VALVE	6	1	C		CV	C	RR			12	
										O	RR			12	
	LOW HEAD SAFETY INJECTION SUPPLY CHECK VALVE TO "C" RCS HOT LEG														
1-SI-HCV-1936	11715-CBM-096B	1 OF 4	E5	AO GLOBE	1	2	A	CIV	EV	C	03				
									FS	C	03				
									LT	C	OPB				
									ST	C	NA	2			
									VP	OC	24				
	WASTE GAS FROM ACCUMULATORS TO CHARCOAL FILTERS														
1-SI-MOV-1836	11715-CBM-096A	3 OF 3	C8	MO GATE	3	1	B		EV	C	CS		10		
										O	CS		10		
									ST	C	CS		10		
										O	CS		10		
									VP	OC	24				
	HIGH HEAD SI FROM CHARGING HEADER TO RCS COLD LEGS, OUTSIDE CONTAINMENT ISOLATION VALVE														
1-SI-MOV-1860A	11715-CBM-096A	1 OF 3	B7	MO GATE	12	2	B		EV	C	03				

NORTH ANNA UNIT 1
FOURTH INSERVICE TESTING INTERVAL
VALVE INSERVICE TEST TABLE

VALVE NUMBER	DRAWING NUMBER	SHEET	COOR	VALVE TYPE	VALVE SIZE	ASME CLASS	ISTC CAT	ISO VALVE TYPE	TEST TYPE	TEST POS	TEST FREQ	RE REQ V-	CS JUST CSV-	RR JUST RRV-	NC ALT TEST VNC-
1-SI-MOV-1860A	11715-CBM-096A	1 OF 3	B7	MO GATE	12	2	B		EV	O	03				
									ST	C	03				
										O	03				
									VP	OC	24				
	"A" LOW HEAD SI PUMP SUCTION ISOLATION FROM CONTAINMENT														
1-SI-MOV-1860B	11715-CBM-096A	1 OF 3	B5	MO GATE	12	2	B		EV	C	03				
										O	03				
									ST	C	03				
										O	03				
									VP	OC	24				
	"B" LOW HEAD SI PUMP SUCTION ISOLATION FROM CONTAINMENT														
1-SI-MOV-1862A	11715-CBM-096A	1 OF 3	A3	MO GATE	12	2	B		EV	C	03				
									ST	C	03				
									VP	OC	24				
	"A" LOW HEAD SI PUMP SUCTION FROM RWST														
1-SI-MOV-1862B	11715-CBM-096A	1 OF 3	B3	MO GATE	12	2	B		EV	C	03				
									ST	C	03				
									VP	OC	24				
	"B" LOW HEAD SI PUMP SUCTION FROM RWST														
1-SI-MOV-1863A	11715-CBM-096A	2 OF 3	C5	MO GATE	8	2	B		EV	C	03				
										O	03				
									ST	C	03				
										O	03				
									VP	OC	24				
	"A" LOW HEAD SAFETY INJECTION PUMP SUPPLY ISOLATION TO CHARGING PUMPS														
1-SI-MOV-1863B	11715-CBM-096A	2 OF 3	D4	MO GATE	8	2	B		EV	C	03				
										O	03				
									ST	C	03				
										O	03				
									VP	OC	24				

NORTH ANNA UNIT 1
FOURTH INSERVICE TESTING INTERVAL
VALVE INSERVICE TEST TABLE

VALVE NUMBER	DRAWING NUMBER	SHEET	COOR	VALVE TYPE	VALVE SIZE	ASME CLASS	ISTC CAT	ISO VALVE TYPE	TEST TYPE	TEST POS	TEST FREQ	RE REQ V-	CS JUST CSV-	RR JUST RRV-	NC ALT TEST VNC-
	"B" LOW HEAD SAFETY INJECTION PUMP SUPPLY ISOLATION TO CHARGING PUMPS														
1-SI-MOV-1864A	11715-CBM-096A	2 OF 3	C7	MO GATE	10	2	B		EV	C	03				
										O	03				
									ST	C	03				
										O	03				
									VP	OC	24				
	"A" LOW HEAD SI PUMP COLD LEG DISCHARGE STOP VALVE														
1-SI-MOV-1864B	11715-CBM-096A	2 OF 3	C6	MO GATE	10	2	B		EV	C	03				
										O	03				
									ST	C	03				
										O	03				
									VP	OC	24				
	"B" LOW HEAD SI PUMP COLD LEG DISCHARGE STOP VALVE														
1-SI-MOV-1865A	11715-CBM-096B	1 OF 4	C7	MO GATE	12	2	B		EV	C	CS		11		
										O	CS		11		
									ST	C	CS		11		
										O	CS		11		
									VP	OC	24				
	"A" ACCUMULATOR DISCHARGE ISOLATION VALVE TO RCS COLD LEG														
1-SI-MOV-1865B	11715-CBM-096B	2 OF 4	C5	MO GATE	12	2	B		EV	C	CS		11		
										O	CS		11		
									ST	C	CS		11		
										O	CS		11		
									VP	OC	24				
	"B" ACCUMULATOR DISCHARGE ISOLATION VALVE TO RCS COLD LEG														
1-SI-MOV-1865C	11715-CBM-096B	3 OF 4	C5	MO GATE	12	2	B		EV	C	CS		11		
										O	CS		11		
									ST	C	CS		11		
										O	CS		11		
									VP	OC	24				

NORTH ANNA UNIT 1
FOURTH INSERVICE TESTING INTERVAL
VALVE INSERVICE TEST TABLE

VALVE NUMBER	DRAWING NUMBER	SHEET	COOR	VALVE TYPE	VALVE SIZE	ASME CLASS	ISTC CAT	ISO VALVE TYPE	TEST TYPE	TEST POS	TEST FREQ	RE REQ V-	CS JUST CSV-	RR JUST RRV-	NC ALT TEST VNC-
	"C" ACCUMULATOR DISCHARGE ISOLATION VALVE TO RCS COLD LEG														
1-SI-MOV-1867A	11715-CBM-096A	3 OF 3	D4	MO GATE	3	2	B		EV	C	RR			23	
										O	RR			23	
									ST	C	RR			23	
										O	RR			23	
									VP	OC	24				
	BORON INJECTION TANK HIGH HEAD SI INLET VALVE														
1-SI-MOV-1867B	11715-CBM-096A	3 OF 3	D4	MO GATE	3	2	B		EV	C	RR			23	
										O	RR			23	
									ST	C	RR			23	
										O	RR			23	
									VP	OC	24				
	BORON INJECTION TANK HIGH HEAD SI INLET VALVE														
1-SI-MOV-1867C	11715-CBM-096A	3 OF 3	E7	MO GATE	3	1	B		EV	C	03				
										O	03				
									ST	C	03				
										O	03				
									VP	OC	24				
	BORON INJECTION TANK OUTLET TO RCS COLD LEG, OUTSIDE CONTAINMENT ISOLATION VALVE														
1-SI-MOV-1867D	11715-CBM-096A	3 OF 3	D7	MO GATE	3	1	B		EV	C	03				
										O	03				
									ST	C	03				
										O	03				
									VP	OC	24				
	BORON INJECTION TANK OUTLET TO RCS COLD LEG, OUTSIDE CONTAINMENT ISOLATION VALVE														
1-SI-MOV-1869A	11715-CBM-096A	3 OF 3	C8	MO GATE	3	1	B		EV	C	CS		10		
										O	CS		10		

NORTH ANNA UNIT 1
FOURTH INSERVICE TESTING INTERVAL
VALVE INSERVICE TEST TABLE

VALVE NUMBER	DRAWING NUMBER	SHEET	COOR	VALVE TYPE	VALVE SIZE	ASME CLASS	ISTC CAT	ISO VALVE TYPE	TEST TYPE	TEST POS	TEST FREQ	RE REQ V-	CS JUST CSV-	RR JUST RRV-	NC ALT TEST VNC-
1-SI-MOV-1869A	11715-CBM-096A	3 OF 3	C8	MO GATE	3	1	B		ST	C	CS		10		
										O	CS		10		
									VP	OC	24				
	HIGH HEAD SI FROM CHARGING HEADER TO RCS HOT LEGS, OUTSIDE CONTAINMENT ISOLATION VALVE														
1-SI-MOV-1869B	11715-CBM-096A	3 OF 3	B8	MO GATE	3	1	B		EV	C	CS		10		
										O	CS		10		
									ST	C	CS		10		
										O	CS		10		
									VP	OC	24				
	HIGH HEAD SI FROM CHARGING HEADER TO RCS HOT LEGS, OUTSIDE CONTAINMENT ISOLATION VALVE														
1-SI-MOV-1885A	11715-CBM-096A	2 OF 3	C3	MO GLOBE	2	2	A		EV	C	03				
									LT	C	24	1			
									ST	C	03				
									VP	OC	24				
	"A" LOW HEAD SI PUMP MINIMUM FLOW/TEST LINE ISOLATION														
1-SI-MOV-1885B	11715-CBM-096A	2 OF 3	B3	MO GLOBE	2	2	A		EV	C	03				
									LT	C	24	1			
									ST	C	03				
									VP	OC	24				
	"B" LOW HEAD SI PUMP MINIMUM FLOW/TEST LINE ISOLATION														
1-SI-MOV-1885C	11715-CBM-096A	2 OF 3	D3	MO GLOBE	2	2	A		EV	C	03				
									LT	C	24	1			
									ST	C	03				
									VP	OC	24				
	"A" LOW HEAD SI PUMP MINIMUM FLOW/TEST LINE ISOLATION														
1-SI-MOV-1885D	11715-CBM-096A	2 OF 3	B3	MO GLOBE	2	2	A		EV	C	03				
									LT	C	24	1			

NORTH ANNA UNIT 1
FOURTH INSERVICE TESTING INTERVAL
VALVE INSERVICE TEST TABLE

VALVE NUMBER	DRAWING NUMBER	SHEET	COOR	VALVE TYPE	VALVE SIZE	ASME CLASS	ISTC CAT	ISO VALVE TYPE	TEST TYPE	TEST POS	TEST FREQ	RE REQ V-	CS JUST CSV-	RR JUST RRV-	NC ALT TEST VNC-
1-SI-MOV-1885D	11715-CBM-096A	2 OF 3	B3	MO GLOBE	2	2	A		ST	C	03				
									VP	OC	24				
	"B" LOW HEAD SI PUMP MINIMUM FLOW/TEST LINE ISOLATION														
1-SI-MOV-1890A	11715-CBM-096A	2 OF 3	D7	MO GATE	10	1	B		EV	C	CS		10		
										O	CS		10		
									ST	C	CS		10		
										O	CS		10		
									VP	OC	24				
	"A" LOW HEAD SI PUMP HOT LEG DISCHARGE STOP VALVE, OUTSIDE CONTAINMENT ISOLATION VALVE														
1-SI-MOV-1890B	11715-CBM-096A	2 OF 3	D7	MO GATE	10	1	B		EV	C	CS		10		
										O	CS		10		
									ST	C	CS		10		
										O	CS		10		
									VP	OC	24				
	"B" LOW HEAD SI PUMP HOT LEG DISCHARGE STOP VALVE, OUTSIDE CONTAINMENT ISOLATION VALVE														
1-SI-MOV-1890C	11715-CBM-096A	2 OF 3	C8	MO GATE	10	1	B		EV	C	03				
										O	03				
									ST	C	03				
										O	03				
									VP	OC	24				
	LOW HEAD SI PUMPS COLD LEG DISCHARGE STOP VALVE, OUTSIDE CONTAINMENT ISOLATION VALVE														
1-SI-MOV-1890D	11715-CBM-096A	2 OF 3	C7	MO GATE	10	1	B		EV	C	03				
										O	03				
									ST	C	03				
										O	03				
									VP	OC	24				

NORTH ANNA UNIT 1
FOURTH INSERVICE TESTING INTERVAL
VALVE INSERVICE TEST TABLE

VALVE NUMBER	DRAWING NUMBER	SHEET	COOR	VALVE TYPE	VALVE SIZE	ASME CLASS	ISTC CAT	ISO VALVE TYPE	TEST TYPE	TEST POS	TEST FREQ	RE REQ V-	CS JUST CSV-	RR JUST RRV-	NC ALT TEST VNC-
	LOW HEAD SI PUMPS COLD LEG DISCHARGE STOP VALVE, OUTSIDE CONTAINMENT ISOLATION VALVE														
1-SI-RV-1845A	11715-CBM-096A "A" LOW HEAD SI PUMP DISCHARGE RELIEF VALVE, RV DISCHARGE TO SAFEGUARDS AREA SUMP	2 OF 3	D6	RELIEF VALVE	0.75	2	C		SP	O	120	3			
1-SI-RV-1845B	11715-CBM-096A LOW HEAD SI HEADER TO COLD LEG RELIEF VALVE, RV DISCHARGE TO SAFEGUARDS AREA SUMP	2 OF 3	B7	RELIEF VALVE	0.75	2	C		SP	O	120	3			
1-SI-RV-1845C	11715-CBM-096A "B" LOW HEAD SI PUMP DISCHARGE RELIEF VALVE, RV DISCHARGE TO SAFEGUARDS AREA SUMP	2 OF 3	C6	RELIEF VALVE	0.75	2	C		SP	O	120	3			
1-SI-RV-1857	11715-CBM-096A BORON INJECTION TANK RELIEF VALVE, RV DISCHARGE TO FLOOR DRAIN	3 OF 3	D7	RELIEF VALVE	0.75	2	C		SP	O	120	3, NOTE 1			
1-SI-RV-1858A	11715-CBM-096B "A" ACCUMULATOR RELIEF VALVE	1 OF 4	D7	RELIEF VALVE	1	2	C		SP	O	120	3			
1-SI-RV-1858B	11715-CBM-096B "B" ACCUMULATOR RELIEF VALVE	2 OF 4	E5	RELIEF VALVE	1	2	C		SP	O	120	3			
1-SI-RV-1858C	11715-CBM-096B "C" ACCUMULATOR RELIEF VALVE	3 OF 4	E5	RELIEF VALVE	1	2	C		SP	O	120	3			
1-SI-TV-100	11715-CBM-096B NITROGEN SUPPLY TO ACCUMULATORS, OUTSIDE CONTAINMENT ISOLATION VALVE	1 OF 4	F3	AO GLOBE	1	2	A	CIV	EV FS LT ST VP	C C C C OC	03 03 OPB 03 24				

NORTH ANNA UNIT 1
FOURTH INSERVICE TESTING INTERVAL
VALVE INSERVICE TEST TABLE

VALVE NUMBER	DRAWING NUMBER	SHEET	COOR	VALVE TYPE	VALVE SIZE	ASME CLASS	ISTC CAT	ISO VALVE TYPE	TEST TYPE	TEST POS	TEST FREQ	RE REQ V-	CS JUST CSV-	RR JUST RRV-	NC ALT TEST VNC-
1-SI-TV-101	11715-CBM-096B	1 OF 4	E4	AO GLOBE	1	2	A	CIV	EV	C	03				
									FS	C	03				
									LT	C	OPB				
									ST	C	03				
									VP	OC	24				
	ACCUMULATORS TO WASTE GAS CHARCOAL FILTERS, OUTSIDE CONTAINMENT ISOLATION VALVE														
1-SI-TV-1842	11715-CBM-096B	1 OF 4	D4	AO GLOBE	0.75	2	A	CIV	EV	C	03				
									FS	C	03				
									LT	C	OPB				
									ST	C	03				
									VP	OC	24				
	ACCUMULATOR TEST LINE, INSIDE CONTAINMENT ISOLATION VALVE														
1-SI-TV-1859	11715-CBM-096A	2 OF 3	F7	AO GLOBE	0.75	2	A	CIV	EV	C	03				
									FS	C	03				
									LT	C	OPB				
									ST	C	03				
									VP	OC	24				
	ACCUMULATOR TEST LINE, OUTSIDE CONTAINMENT ISOLATION														
1-SI-TV-1884A	11715-CBM-096A	3 OF 3	E4	AO GLOBE	1	2	B		EV	C	03				
									FS	C	03				
									ST	C	03				
									VP	OC	24				
	BORON INJECTION TANK RETURN ISOLATION TO BORIC ACID STORAGE TANK														
1-SI-TV-1884B	11715-CBM-096A	3 OF 3	E4	AO GLOBE	1	2	B		EV	C	03				
									FS	C	03				
									ST	C	03				
									VP	OC	24				
	BORON INJECTION TANK RETURN ISOLATION TO BORIC ACID STORAGE TANK														
1-SI-TV-1884C	11715-CBM-096A	3 OF 3	D4	AO GLOBE	1	3	B		EV	C	03				

NORTH ANNA UNIT 1
FOURTH INSERVICE TESTING INTERVAL
VALVE INSERVICE TEST TABLE

VALVE NUMBER	DRAWING NUMBER	SHEET	COOR	VALVE TYPE	VALVE SIZE	ASME CLASS	ISTC CAT	ISO VALVE TYPE	TEST TYPE	TEST POS	TEST FREQ	RE REQ V-	CS JUST CSV-	RR JUST RRV-	NC ALT TEST VNC-
1-SI-TV-1884C	11715-CBM-096A	3 OF 3	D4	AO GLOBE	1	3	B		FS	C	03				
									ST	C	03				
									VP	OC	24				
	BORON INJECTION TANK SUPPLY ISOLATION FROM BORIC ACID TRANSFER PUMPS														

NORTH ANNA UNIT 1
FOURTH INSERVICE TESTING INTERVAL
VALVE INSERVICE TEST TABLE

VALVE NUMBER	DRAWING NUMBER	SHEET	COOR	VALVE TYPE	VALVE SIZE	ASME CLASS	ISTC CAT	ISO VALVE TYPE	TEST TYPE	TEST POS	TEST FREQ	RE REQ V-	CS JUST CSV-	RR JUST RRV-	NC ALT TEST VNC-
1-SS-TV-100A	11715-CBM-089D	1 OF 1	F6	AO GLOBE	0.375	1	A	CIV	EV	C	03				
									FS	C	03				
									LT	C	OPB				
									ST	C	03				
									VP	OC	24				
	PRESSURIZER LIQUID SPACE SAMPLE LINE, INSIDE CONTAINMENT ISOLATION VALVE														
1-SS-TV-100B	11715-CBM-089D	1 OF 1	F5	AO GLOBE	0.375	1	A	CIV	EV	C	03				
									FS	C	03				
									LT	C	OPB				
									ST	C	03				
									VP	OC	24				
	PRESSURIZER LIQUID SPACE SAMPLE LINE, OUTSIDE CONTAINMENT ISOLATION VALVE														
1-SS-TV-101A	11715-CBM-089D	1 OF 1	E6	AO GLOBE	0.375	1	A	CIV	EV	C	03				
									FS	C	03				
									LT	C	OPB				
									ST	C	03				
									VP	OC	24				
	PRESSURIZER VAPOR SPACE SAMPLE LINE, INSIDE CONTAINMENT ISOLATION VALVE														
1-SS-TV-101B	11715-CBM-089D	1 OF 1	E5	AO GLOBE	0.375	1	A	CIV	EV	C	03				
									FS	C	03				
									LT	C	OPB				
									ST	C	03				
									VP	OC	24				
	PRESSURIZER VAPOR SPACE SAMPLE LINE, OUTSIDE CONTAINMENT ISOLATION VALVE														
1-SS-TV-102A	11715-CBM-089D	1 OF 1	D6	SO GLOBE	0.375	1	A	CIV	EV	C	03				
									FS	C	03				
									LT	C	OPB				
									ST	C	03				
									VP	OC	24				

VALVE NUMBER	DRAWING NUMBER	SHEET	COOR	VALVE TYPE	VALVE SIZE	ASME CLASS	ISTC CAT	ISO VALVE TYPE	TEST TYPE	TEST POS	TEST FREQ	RE REQ V-	CS JUST CSV-	RR JUST RRV-	NC ALT TEST VNC-
	REACTOR COOLANT COLD LEGS SAMPLE HEADER, INSIDE CONTAINMENT ISOLATION VALVE														
1-SS-TV-102B	11715-CBM-089D	1 OF 1	D5	SO GLOBE	0.375	1	A	CIV	EV	C	03				
									FS	C	03				
									LT	C	OPB				
									ST	C	03				
									VP	OC	24				
	REACTOR COOLANT COLD LEGS SAMPLE HEADER, OUTSIDE CONTAINMENT ISOLATION VALVE														
1-SS-TV-103A	11715-CBM-089D	1 OF 1	F6	SO GLOBE	0.375	2	AE	CIV	LT	C	OPB				
									VP	OC	24				
	RHR SAMPLE HEADER, INSIDE CONTAINMENT ISOLATION VALVE														
1-SS-TV-103B	11715-CBM-089D	1 OF 1	F5	SO GLOBE	0.375	2	AE	CIV	LT	C	OPB				
									VP	OC	24				
	RHR SAMPLE HEADER, OUTSIDE CONTAINMENT ISOLATION VALVE														
1-SS-TV-104A	11715-CBM-089D	1 OF 1	C6	AO GLOBE	0.375	2	A	CIV	EV	C	03				
									FS	C	03				
									LT	C	OPB				
									ST	C	03				
									VP	OC	24				
	PRESSURIZER RELIEF TANK GAS SPACE SAMPLE LINE, INSIDE CONTAINMENT ISOLATION VALVE														
1-SS-TV-104B	11715-CBM-089D	1 OF 1	C5	AO GLOBE	0.375	2	A	CIV	EV	C	03				
									FS	C	03				
									LT	C	OPB				
									ST	C	03				
									VP	OC	24				
	PRESSURIZER RELIEF TANK GAS SPACE SAMPLE LINE, OUTSIDE CONTAINMENT ISOLATION VALVE														
1-SS-TV-106A	11715-CBM-089D	1 OF 1	E6	SO GLOBE	0.375	1	A	CIV	EV	C	03				
									FS	C	03				
									LT	C	OPB				

NORTH ANNA UNIT 1
FOURTH INSERVICE TESTING INTERVAL
VALVE INSERVICE TEST TABLE

VALVE NUMBER	DRAWING NUMBER	SHEET	COOR	VALVE TYPE	VALVE SIZE	ASME CLASS	ISTC CAT	ISO VALVE TYPE	TEST TYPE	TEST POS	TEST FREQ	RE REQ V-	CS JUST CSV-	RR. JUST RRV-	NC ALT TEST VNC-
1-SS-TV-106A	11715-CBM-089D	1 OF 1	E6	SO GLOBE	0.375	1	A	CIV	ST	C	03				
									VP	OC	24				
	REACTOR COOLANT HOT LEGS SAMPLE HEADER, INSIDE CONTAINMENT ISOLATION VALVE														
1-SS-TV-106B	11715-CBM-089D	1 OF 1	E5	SO GLOBE	0.375	1	A	CIV	EV	C	03				
									FS	C	03				
									LT	C	OPB				
									ST	C	03				
									VP	OC	24				
	REACTOR COOLANT HOT LEGS SAMPLE HEADER, OUTSIDE CONTAINMENT ISOLATION VALVE														
1-SS-TV-112A	11715-CBM-089B	3 OF 4	D3	AO GLOBE	0.375	2	A	CIV	EV	C	03				
									FS	C	03				
									LT	C	OPB				
									ST	C	03				
									VP	OC	24				
	STEAM GENERATORS SAMPLE HEADER, INSIDE CONTAINENT ISOLATION VALVE														
1-SS-TV-112B	11715-CBM-089B	3 OF 4	C3	AO GLOBE	0.375	2	A	CIV	EV	C	03				
									FS	C	03				
									LT	C	OPB				
									ST	C	03				
									VP	OC	24				
	STEAM GENERATORS SAMPLE HEADER, OUTSIDE CONTAINMENT ISOLATION VALVE														

NORTH ANNA UNIT 1
FOURTH INSERVICE TESTING INTERVAL
VALVE INSERVICE TEST TABLE

VALVE NUMBER	DRAWING NUMBER	SHEET	COOR	VALVE TYPE	VALVE SIZE	ASME CLASS	ISTC CAT	ISO VALVE TYPE	TEST TYPE	TEST POS	TEST FREQ	RE REQ V-	CS JUST CSV-	RR JUST RRV-	NC ALT TEST VNC-
1-SV-TV-102-1	11715-CBM-072A	2 OF 3	C3	AO GLOBE	6	2	B		EV	C	03				
									FS	C	03				
									ST	C	03				
									VP	OC	24				
	CONDENSER AIR REMOVAL DISCHARG TO CONTAINMENT, OUTSIDE CONTAINMENT ISOLATION VALVE														
1-SV-TV-103	11715-CBM-072A	2 OF 3	D3	AO GLOBE	6	2	A	CIV	EV	C	03				
									FS	C	03				
									LT	C	OPB				
									ST	C	03				
									VP	OC	24				
	CONDENSER AIR REMOVAL DISCHARGE TO CONTAINMENT, OUTSIDE CONTAINMENT ISOLATION VALVE														

NORTH ANNA UNIT 1
FOURTH INSERVICE TESTING INTERVAL
VALVE INSERVICE TEST TABLE

VALVE NUMBER	DRAWING NUMBER	SHEET	COOR	VALVE TYPE	VALVE SIZE	ASME CLASS	ISTC CAT	ISO VALVE TYPE	TEST TYPE	TEST POS	TEST FREQ	RE REQ V-	CS JUST CSV-	RR JUST RRV-	NC ALT TEST VNC-
1-SW-0003	11715-CBM-078A	3 OF 5	D7	CHECK VALVE	20	3	C		CV	C O	03 03				
	UNIT 1 "A" SERVICE WATER PUMP DISCHARGE CHECK VALVE														
1-SW-0010	11715-CBM-078A	3 OF 5	D6	CHECK VALVE	20	3	C		CV	C O	03 03				
	UNIT 1 "B" SERVICE WATER PUMP DISCHARGE CHECK VALVE														
1-SW-0114	11715-CBM-078B	1 OF 4	F8	CHECK VALVE	24	3	C		CV	C O	RR RR			14 14	
	"A" SERVICE WATR HEADER SUPPLY CHECK VALVE TO RECIRC SPRAY HX UPSTREAM OF CROSS CONNECT														
1-SW-0116	11715-CBM-078B	1 OF 4	F8	CHECK VALVE	24	3	C		CV	C O	RR RR			14 14	
	"B" SERVICE WATR HEADER SUPPLY CHECK VALVE TO RECIRC SPRAY HX UPSTREAM OF CROSS CONNECT														
1-SW-0120	11715-CBM-078B	1 OF 4	E3	CHECK VALVE	16	2	C		CV	C O	RR RR			14 14	
	"A" RECIRC SPRAY HEAT EXCHANGER SERVICE WATER SUPPLY CHECK VALVE														
1-SW-0130	11715-CBM-078B	1 OF 4	E4	CHECK VALVE	16	2	C		CV	C O	RR RR			14 14	
	"B" RECIRC SPRAY HEAT EXCHANGER SERVICE WATER SUPPLY CHECK VALVE														
1-SW-0140	11715-CBM-078B	1 OF 4	E6	CHECK VALVE	16	2	C		CV	C O	RR RR			14 14	
	"C" RECIRC SPRAY HEAT EXCHANGER SERVICE WATER SUPPLY CHECK VALVE														
1-SW-0150	11715-CBM-078B	1 OF 4	E7	CHECK VALVE	16	2	C		CV	C	RR			14	

NORTH ANNA UNIT 1
FOURTH INSERVICE TESTING INTERVAL
VALVE INSERVICE TEST TABLE

VALVE NUMBER	DRAWING NUMBER	SHEET	COOR	VALVE TYPE	VALVE SIZE	ASME CLASS	ISTC CAT	ISO VALVE TYPE	TEST TYPE	TEST POS	TEST FREQ	RE REQ V-	CS JUST CSV-	RR JUST RRV-	NC ALT TEST VNC-
1-SW-0150	11715-CBM-078B	1 OF 4	E7	CHECK VALVE	16	2	C		CV	O	RR			14	
	"D" RECIRC SPRAY HEAT EXCHANGER SERVICE WATER SUPPLY CHECK VALVE														
1-SW-0641	11715-CBM-078G	1 OF 2	E6	CHECK VALVE	2	3	C		CV	C O	03 03				
	SERVICE WATER SUPPLY TO CHARGING PUMP SEAL COOLER CHECK VALVE														
1-SW-0644	11715-CBM-078G	1 OF 2	E7	CHECK VALVE	2	3	C		CV	C O	03 03				
	SERVICE WATER SUPPLY TO CHARGING PUMP SEAL COOLER CHECK VALVE														
1-SW-0658	11715-CBM-078G	1 OF 2	E5	CHECK VALVE	2	3	C		CV	C O	03 03				
	SERVICE WATER SUPPLY TO CHARGING PUMP SEAL COOLER CHECK VALVE														
1-SW-0661	11715-CBM-078G	1 OF 2	E5	CHECK VALVE	2	3	C		CV	C O	03 03				
	SERVICE WATER SUPPLY TO CHARGING PUMP SEAL COOLER CHECK VALVE														
1-SW-0686	11715-CBM-078G	1 OF 2	E4	CHECK VALVE	2	3	C		CV	C O	03 03				
	SERVICE WATER SUPPLY TO CHARGING PUMP SEAL COOLER CHECK VALVE														
1-SW-0689	11715-CBM-078G	1 OF 2	E4	CHECK VALVE	2	3	C		CV	C O	03 03				
	SERVICE WATER SUPPLY TO CHARGING PUMP SEAL COOLER CHECK VALVE														
1-SW-1067	11715-CBM-078A	3 OF 5	E7	MANUAL BALL	1.5	3	B		EV	C	24				
	SERVICE WATER CHEMICAL ADDITION SYSTEM MANUAL ISOLATION VALVE														
1-SW-1070	11715-CBM-078A	3 OF 5	F7	MANUAL BALL	1.5	3	B		EV	C	24				

NORTH ANNA UNIT 1
FOURTH INSERVICE TESTING INTERVAL
VALVE INSERVICE TEST TABLE

VALVE NUMBER	DRAWING NUMBER	SHEET	COOR	VALVE TYPE	VALVE SIZE	ASME CLASS	ISTC CAT	ISO VALVE TYPE	TEST TYPE	TEST POS	TEST FREQ	RE REQ V-	CS JUST CSV-	RR JUST RRV-	NC ALT TEST VNC-
	SERVICE WATER CHEM ADDITION SYSTEM MANUAL ISOLATION VALVE														
1-SW-1139	11715-CBM-078A	3 OF 5	E7	MANUAL GATE	1.5	3	B		EV	C	24				
	SERVICE WATER CHEM ADDITION SYSTEM MANUAL ISOLATION VALVE														
1-SW-1366	11715-CBM-078C	2 OF 2	F6	CHECK VALVE	2	3	C		CV	C	03				
										O	03				
	SERVICE WATER SUPPLY CHECK VALVE														
1-SW-1367	11715-CBM-078C	2 OF 2	F7	CHECK VALVE	2	3	C		CV	C	03				
										O	03				
	SERVICE WATER SUPPLY CHECK VALVE														
1-SW-MOV-101A	11715-CBM-078A	4 OF 5	B3	MO BFLY	24	3	B		EV	O	RR			24	
									ST	O	RR			24	
									VP	OC	24				
	"A" SERVICE WATER HEADER SUPPLY ISOLATION TO RECIRC SPRAY HEAT EXCHANGERS														
1-SW-MOV-101B	11715-CBM-078A	4 OF 5	B3	MO BFLY	24	3	B		EV	O	RR			24	
									ST	O	RR			24	
									VP	OC	24				
	"A" SERVICE WATER HEADER SUPPLY ISOLATION TO RECIRC SPRAY HEAT EXCHANGERS														
1-SW-MOV-101C	11715-CBM-078A	4 OF 5	B3	MO BFLY	24	3	B		EV	O	RR			24	
									ST	O	RR			24	
									VP	OC	24				
	"B" SERVICE WATER HEADER SUPPLY ISOLATION TO RECIRC SPRAY HEAT EXCHANGERS														
1-SW-MOV-101D	11715-CBM-078A	4 OF 5	C3	MO BFLY	24	3	B		EV	O	RR			24	
									ST	O	RR			24	
									VP	OC	24				
	"B" SERVICE WATER HEADER SUPPLY ISOLATION TO RECIRC SPRAY HEAT EXCHANGERS														
1-SW-MOV-102A	11715-CBM-078B	1 OF 4	F8	MO BFLY	24	3	B		EV	C	03				

NORTH ANNA UNIT 1
FOURTH INSERVICE TESTING INTERVAL
VALVE INSERVICE TEST TABLE

VALVE NUMBER	DRAWING NUMBER	SHEET	COOR	VALVE TYPE	VALVE SIZE	ASME CLASS	ISTC CAT	ISO VALVE TYPE	TEST TYPE	TEST POS	TEST FREQ	RE REQ V-	CS JUST CSV-	RR JUST RRV-	NC ALT TEST VNC-
1-SW-MOV-102A	11715-CBM-078B	1 OF 4	F8	MO BFLY	24	3	B		ST	C	03				
									VP	OC	24				
	SERVICE WATER SUPPLY CROSS CONNECTS TO RECIRC SPRAY HEAT EXCHANGERS														
1-SW-MOV-102B	11715-CBM-078B	1 OF 4	F8	MO BFLY	24	3	B		EV	C	03				
									ST	C	03				
									VP	OC	24				
	SERVICE WATER SUPPLY CROSS CONNECTS TO RECIRC SPRAY HEAT EXCHANGERS														
1-SW-MOV-103A	11715-CBM-078B	1 OF 4	E3	MO BFLY	16	2	A	CIV	EV	C	03				
										O	03				
									LT	C	OPB				
									ST	C	03				
										O	03				
									VP	OC	24				
	SERVICE WATER SUPPLY TO "A" RECIRC SPRAY HEAT EXCHANGER, OUTSIDE CONT ISOLATION VALVE														
1-SW-MOV-103B	11715-CBM-078B	1 OF 4	E4	MO BFLY	16	2	A	CIV	EV	C	03				
										O	03				
									LT	C	OPB				
									ST	C	03				
										O	03				
									VP	OC	24				
	SERVICE WATER SUPPLY TO "B" RECIRC SPRAY HEAT EXCHANGER, OUTSIDE CONT ISOLATION VALVE														
1-SW-MOV-103C	11715-CBM-078B	1 OF 4	E6	MO BFLY	16	2	A	CIV	EV	C	03				
										O	03				
									LT	C	OPB				
									ST	C	03				
										O	03				
									VP	OC	24				
	SERVICE WATER SUPPLY TO "C" RECIRC SPRAY HEAT EXCHANGER, OUTSIDE CONT ISOLATION VALVE														

NORTH ANNA UNIT 1
FOURTH INSERVICE TESTING INTERVAL
VALVE INSERVICE TEST TABLE

VALVE NUMBER	DRAWING NUMBER	SHEET	COOR	VALVE TYPE	VALVE SIZE	ASME CLASS	ISTC CAT	ISO VALVE TYPE	TEST TYPE	TEST POS	TEST FREQ	RE REQ V-	CS JUST CSV-	RR JUST RRV-	NC ALT TEST VNC-
1-SW-MOV-103D	11715-CBM-078B	1 OF 4	E7	MO BFLY	16	2	A	CIV	EV	C	03				
										O	03				
									LT	C	OPB				
									ST	C	03				
										O	03				
									VP	OC	24				
	SERVICE WATER SUPPLY TO "D" RECIRC SPRAY HEAT EXCHANGER, OUTSIDE CONT ISOLATION VALVE														
1-SW-MOV-104A	11715-CBM-078B	1 OF 4	C3	MO BFLY	16	2	A	CIV	EV	C	03				
										O	03				
									LT	C	OPB				
									ST	C	03				
										O	03				
									VP	OC	24				
	SERVICE WATER RETURN FROM "A" RECIRC SPRAY HEAT EXCHANGER, OUTSIDE CONT ISOLATION VALVE														
1-SW-MOV-104B	11715-CBM-078B	1 OF 4	C5	MO BFLY	16	2	A	CIV	EV	C	03				
										O	03				
									LT	C	OPB				
									ST	C	03				
										O	03				
									VP	OC	24				
	SERVICE WATER RETURN FROM "B" RECIRC SPRAY HEAT EXCHANGER, OUTSIDE CONT ISOLATION VALVE														
1-SW-MOV-104C	11715-CBM-078B	1 OF 4	C6	MO BFLY	16	2	A	CIV	EV	C	03				
										O	03				
									LT	C	OPB				
									ST	C	03				
										O	03				
									VP	OC	24				
	SERVICE WATER RETURN FROM "C" RECIRC SPRAY HEAT EXCHANGER, OUTSIDE CONT ISOLATION VALVE														
1-SW-MOV-104D	11715-CBM-078B	1 OF 4	C7	MO BFLY	16	2	A	CIV	EV	C	03				
										O	03				

NORTH ANNA UNIT 1
FOURTH INSERVICE TESTING INTERVAL
VALVE INSERVICE TEST TABLE

VALVE NUMBER	DRAWING NUMBER	SHEET	COOR	VALVE TYPE	VALVE SIZE	ASME CLASS	ISTC CAT	ISO VALVE TYPE	TEST TYPE	TEST POS	TEST FREQ	RE REQ V-	CS JUST CSV-	RR JUST RRV-	NC ALT TEST VNC-
1-SW-MOV-104D	11715-CBM-078B	1 OF 4	C7	MO BFLY	16	2	A	CIV	LT	C	OPB				
									ST	C	03				
										O	03				
									VP	OC	24				
	SERVICE WATER RETURN FROM "D" RECIRC SPRAY HEAT EXCHANGER, OUTSIDE CONT ISOLATION VALVE														
1-SW-MOV-105A	11715-CBM-078A	4 OF 5	C3	MO BFLY	24	3	B		EV	O	RR			24	
									ST	O	RR			24	
									VP	OC	24				
	"B" SERVICE WATER HEADER RETURN ISOLATION FROM RECIRC SPRAY HEAT EXCHANGERS														
1-SW-MOV-105B	11715-CBM-078A	4 OF 5	C3	MO BFLY	24	3	B		EV	O	RR			24	
									ST	O	RR			24	
									VP	OC	24				
	"B" SERVICE WATER HEADER RETURN ISOLATION FROM RECIRC SPRAY HEAT EXCHANGERS														
1-SW-MOV-105C	11715-CBM-078A	4 OF 5	C3	MO BFLY	24	3	B		EV	O	RR			24	
									ST	O	RR			24	
									VP	OC	24				
	"A" SERVICE WATER HEADER RETURN ISOLATION FROM RECIRC SPRAY HEAT EXCHANGERS														
1-SW-MOV-105D	11715-CBM-078A	4 OF 5	C3	MO BFLY	24	3	B		EV	O	RR			24	
									ST	O	RR			24	
									VP	OC	24				
	"A" SERVICE WATER HEADER RETURN ISOLATION FROM RECIRC SPRAY HEAT EXCHANGERS														
1-SW-MOV-106A	11715-CBM-078B	1 OF 4	B8	MO BFLY	24	3	B		EV	C	03				
									ST	C	03				
									VP	OC	24				
	SERVICE WATER RETURN CROSS CONNECTS FROM RECIRC SPRAY HEAT EXCHANGERS														
1-SW-MOV-106B	11715-CBM-078B	1 OF 4	A8	MO BFLY	24	3	B		EV	C	03				
									ST	C	03				

NORTH ANNA UNIT 1
FOURTH INSERVICE TESTING INTERVAL
VALVE INSERVICE TEST TABLE

VALVE NUMBER	DRAWING NUMBER	SHEET	COOR	VALVE TYPE	VALVE SIZE	ASME CLASS	ISTC CAT	ISO VALVE TYPE	TEST TYPE	TEST POS	TEST FREQ	RE REQ V-	CS JUST CSV-	RR JUST RRV-	NC ALT TEST VNC-
1-SW-MOV-106B	11715-CBM-078B	1 OF 4	A8	MO BFLY	24	3	B		VP	OC	24				
	SERVICE WATER RETURN CROSS CONNECTS FROM RECIRC SPRAY HEAT EXCHANGERS														
1-SW-MOV-108A	11715-CBM-078C	1 OF 2	B3	MO BFLY	24	3	B		EV	C	CS		15		
										O	CS		15		
									ST	C	CS		15		
										O	CS		15		
									VP	OC	24				
	"A" SERVICE WATER HEADER SUPPLY ISOLATION TO COMPONENT COOLING HEAT EXCHANGERS														
1-SW-MOV-108B	11715-CBM-078C	1 OF 2	B3	MO BFLY	24	3	B		EV	C	CS		15		
										O	CS		15		
									ST	C	CS		15		
										O	CS		15		
									VP	OC	24				
	"A" SERVICE WATER HEADER SUPPLY ISOLATION TO COMPONENT COOLING HEAT EXCHANGERS														
1-SW-MOV-110A	11715-CBM-078A	4 OF 5	C4	MO BFLY	8	3	B		EV	C	03				
									ST	C	03				
									VP	OC	24				
	SERVICE WATER HEADER SUPPLY TO RECIRCULATION AIR COOLERS														
1-SW-MOV-110B	11715-CBM-078A	4 OF 5	C4	MO BFLY	8	3	B		EV	C	03				
									ST	C	03				
									VP	OC	24				
	SERVICE WATER HEADER SUPPLY TO RECIRCULATION AIR COOLERS														
1-SW-MOV-113A	11715-CBM-078A	4 OF 5	B7	MO BFLY	10	3	E		VP	OC	24				
	SERVICE WATER RETURN ISOLATION FROM FUEL PIT COOLERS														
1-SW-MOV-113B	11715-CBM-078A	4 OF 5	B5	MO BFLY	10	3	E		VP	OC	24				
	SERVICE WATER SUPPLY ISOLATION TO FUEL PIT COOLERS														
1-SW-MOV-114A	11715-CBM-078A	4 OF 5	C4	MO BFLY	8	3	B		EV	C	03				

NORTH ANNA UNIT 1
FOURTH INSERVICE TESTING INTERVAL
VALVE INSERVICE TEST TABLE

VALVE NUMBER	DRAWING NUMBER	SHEET	COOR	VALVE TYPE	VALVE SIZE	ASME CLASS	ISTC CAT	ISO VALVE TYPE	TEST TYPE	TEST POS	TEST FREQ	RE REQ V-	CS JUST CSV-	RR JUST RRV-	NC ALT TEST VNC-
1-SW-MOV-114A	11715-CBM-078A	4 OF 5	C4	MO BFLY	8	3	B		ST	C	03				
									VP	OC	24				
	SERVICE WATER HEADER RETURN FROM RECIRCULATION AIR														
1-SW-MOV-114B	11715-CBM-078A	4 OF 5	C4	MO BFLY	8	3	B		EV	C	03				
									ST	C	03				
									VP	OC	24				
	SERVICE WATER HEADER RETURN FROM RECIRCULATION AIR														
1-SW-MOV-115A	11715-CBM-078A	1 OF 5	E6	MO BFLY	24	3	B		EV	O	03				
									ST	O	03				
									VP	OC	24				
	SERVICE WATER HEADER SUPPLY ISOLATION VALVE FROM AUXILIARY SERVICE WATER PUMPS														
1-SW-MOV-117	11715-CBM-078A	1 OF 5	C3	MO BFLY	24	3	B		VP	OC	24				
	UNIT 1 AUXILIARY SERVICE WATER PUMP DISCHARGE ISOLATION														
1-SW-MOV-118	11715-CBM-078A	1 OF 5	D4	MO BFLY	24	3	E		VP	OC	24				
	AUXILIARY SERVICE WATER SUPPLY HEADER CROSS CONNECT														
1-SW-MOV-119	11715-CBM-078A	1 OF 5	C4	MO BFLY	8	3	B		EV	C	03				
									ST	C	03				
									VP	OC	24				
	MAKEUP PUMP SUPPLY VALVE														
1-SW-MOV-120A	11715-CBM-078A	5 OF 5	E4	MO BFLY	24	NC	E		VP	OC	24				
	SERVICE WATER RETURN HEADER VALVE														
1-SW-MOV-120B	11715-CBM-078A	5 OF 5	C4	MO BFLY	24	NC	B		EV	C	03				
									ST	C	03				
									VP	OC	24				
	SERVICE WATER RETURN HEADER VALVE														

NORTH ANNA UNIT 1
FOURTH INSERVICE TESTING INTERVAL
VALVE INSERVICE TEST TABLE

VALVE NUMBER	DRAWING NUMBER	SHEET	COOR	VALVE TYPE	VALVE SIZE	ASME CLASS	ISTC CAT	ISO VALVE TYPE	TEST TYPE	TEST POS	TEST FREQ	RE REQ V-	CS JUST CSV-	RR JUST RRV-	NC ALT TEST VNC-
1-SW-MOV-121A	11715-CBM-078H	1 OF 1	C5	MO BFLY	18	3	B		EV	O	03				
									ST	O	03				
									VP	OC	24				
	SERVICE WATER TO SPRAY ARRAYS STOP VALVE														
1-SW-MOV-121B	11715-CBM-078H	1 OF 1	C7	MO BFLY	18	3	B		EV	O	03				
									ST	O	03				
									VP	OC	24				
	SERVICE WATER TO SPRAY ARRAYS STOP VALVE														
1-SW-MOV-122A	11715-CBM-078H	1 OF 1	C5	MO BFLY	18	3	B		EV	O	03				
									ST	O	03				
									VP	OC	24				
	SERVICE WATER TO SPRAY ARRAYS STOP VALVE														
1-SW-MOV-122B	11715-CBM-078H	1 OF 1	C6	MO BFLY	18	3	B		EV	O	03				
									ST	O	03				
									VP	OC	24				
	SERVICE WATER TO SPRAY ARRAYS STOP VALVE														
1-SW-MOV-123A	11715-CBM-078H	1 OF 1	E4	MO BFLY	24	3	B		EV	C	03				
									ST	C	03				
									VP	OC	24				
	SERVICE WATER BYPASS VALVE														
1-SW-MOV-123B	11715-CBM-078H	1 OF 1	E8	MO BFLY	24	3	B		EV	C	03				
									ST	C	03				
									VP	OC	24				
	SERVICE WATER BYPASS VALVE														
1-SW-RV-100A	11715-CBM-078B	1 OF 4	E3	RELIEF VALVE	0.75	2	C		SP	O	120	3, NOTE 1			
	"A" RECIRC SPRAY HEAT EXCHANG SERVICE WATER RELIEF VALVE, RV DISCHARGE TO CONT SUMP														
1-SW-RV-100B	11715-CBM-078B	1 OF 4	E4	RELIEF VALVE	0.75	2	C		SP	O	120	3, NOTE 1			

NORTH ANNA UNIT 1
FOURTH INSERVICE TESTING INTERVAL
VALVE INSERVICE TEST TABLE

VALVE NUMBER	DRAWING NUMBER	SHEET	COOR	VALVE TYPE	VALVE SIZE	ASME CLASS	ISTC CAT	ISO VALVE TYPE	TEST TYPE	TEST POS	TEST FREQ	RE REQ V-	CS JUST CSV-	RR JUST RRV-	NC ALT TEST VNC-
	"B" RECIRC SPRAY HEAT EXCHANG SERVICE WATER RELIEF VALVE, RV DISCHARGE TO CONT SUMP														
1-SW-RV-100C	11715-CBM-078B	1 OF 4	E6	RELIEF VALVE	0.75	2	C		SP	O	120	3, NOTE 1			
	"C" RECIRC SPRAY HEAT EXCHANG SERVICE WATER RELIEF VALVE, RV DISCHARGE TO CONT SUMP														
1-SW-RV-100D	11715-CBM-078B	1 OF 4	E7	RELIEF VALVE	0.75	2	C		SP	O	120	3, NOTE 1			
	"D" RECIRC SPRAY HEAT EXCHANG SERVICE WATER RELIEF VALVE, RV DISCHARGE TO CONT SUMP														
1-SW-RV-101A	11715-CBM-078C	1 OF 2	E5	RELIEF VALVE	0.75	3	C		SP	O	120	3, NOTE 1			
	UNIT 1 "A" COMPONENT COOLING HEAT EXCHANGER SERVICE WATER RELIEF VALVE														
1-SW-RV-101B	11715-CBM-078C	1 OF 2	E6	RELIEF VALVE	0.75	3	C		SP	O	120	3, NOTE 1			
	UNIT 1 "B" COMPONENT COOLING HEAT EXCHANGER SERVICE WATER RELIEF VALVE														
1-SW-TCV-102A	11715-CBM-078G	1 OF 2	C4	AO GLOBE	2	3	B		EV	O	03				
									FS	O	03				
									ST	O	NA	2			
	SERVICE WATER FROM CHARGING PUMP LUBE OIL COOLER TEMP CONTROL VALVE														
1-SW-TCV-102B	11715-CBM-078G	1 OF 2	C6	AO GLOBE	2	3	B		EV	O	03				
									FS	O	03				
									ST	O	NA	2			
	SERVICE WATER FROM CHARGING PUMP LUBE OIL COOLER TEMP CONTROL VALVE														
1-SW-TCV-102C	11715-CBM-078G	1 OF 2	C8	AO GLOBE	2	3	B		EV	O	03				
									FS	O	03				
									ST	O	NA	2			
	SERVICE WATER FROM CHARGING PUMP LUBE OIL COOLER TEMP CONTROL VALVE														
2-SW-MOV-215B	11715-CBM-078A	1 OF 5	E6	MO BFLY	24	3	B		EV	O	03				
									ST	O	03				
									VP	OC	24				

NORTH ANNA UNIT 1
FOURTH INSERVICE TESTING INTERVAL
VALVE INSERVICE TEST TABLE

VALVE NUMBER	DRAWING NUMBER	SHEET	COOR	VALVE TYPE	VALVE SIZE	ASME CLASS	ISTC CAT	ISO VALVE TYPE	TEST TYPE	TEST POS	TEST FREQ	RE REQ V-	CS JUST CSV-	RR JUST RRV-	NC ALT TEST VNC-
	SERVICE WATER HEADER SUPPLY ISOLATION VALVE FROM AUXILIARY SERVICE WATER PUMPS														

NORTH ANNA UNIT 1
FOURTH INSERVICE TESTING INTERVAL
VALVE INSERVICE TEST TABLE

VALVE NUMBER	DRAWING NUMBER	SHEET	COOR	VALVE TYPE	VALVE SIZE	ASME CLASS	ISTC CAT	ISO VALVE TYPE	TEST TYPE	TEST POS	TEST FREQ	RE REQ V-	CS JUST CSV-	RR JUST RRV-	NC ALT TEST VNC-
1-VG-TV-100A	11715-CBM-090C	1 OF 3	F3	AO GLOBE	1.5	2	A	CIV	EV	C	03				
									FS	C	03				
									LT	C	OPB				
									ST	C	03				
									VP	OC	24				
	VENT LINE ISOL FROM PRIMARY DRAINS TRANSFER TANK TO GAS STRIPPERS, OUTSIDE CONT ISOL														
1-VG-TV-100B	11715-CBM-090C	1 OF 3	D3	AO GLOBE	1.5	2	A	CIV	EV	C	03				
									FS	C	03				
									LT	C	OPB				
									ST	C	03				
									VP	OC	24				
	VENT LINE ISOL FROM PRIMARY DRAINS TRANSFER TANK TO GAS STRIPPERS, INSIDE CONT ISOL VLV														

NORTH ANNA UNIT 1
FOURTH INSERVICE TESTING INTERVAL
VALVE INSERVICE TEST TABLE

VALVE NUMBER	DRAWING NUMBER	SHEET	COOR	VALVE TYPE	VALVE SIZE	ASME CLASS	ISTC CAT	ISO VALVE TYPE	TEST TYPE	TEST POS	TEST FREQ	RE REQ V-	CS JUST CSV-	RR JUST RRV-	NC ALT TEST VNC-
1-VP-012	11715-CBM-072A	2 OF 3	E3	CHECK VALVE	6	2	AC	CIV	CV	C	RR			15	
										O	RR			15	
									LT	C	OPB				
	CONDENSER AIR REMOVAL DISCHARG TO CONTAINMENT INSIDE CONTAINMENT ISOLATION CHECK VALVE														

NORTH ANNA UNIT 1
FOURTH INSERVICE TESTING INTERVAL
VALVE INSERVICE TEST TABLE

VALVE NUMBER	DRAWING NUMBER	SHEET	COOR	VALVE TYPE	VALVE SIZE	ASME CLASS	ISTC CAT	ISO VALVE TYPE	TEST TYPE	TEST POS	TEST FREQ	RE REQ V-	CS JUST CSV-	RR JUST RRV-	NC ALT TEST VNC-
1-WT-038	11715-CBM-102A	2 OF 2	F7	CHECK VALVE	0.75	2	C		CV	C O	03 03	TP-01			
	"A" STEAM GENERATOR CHEMICAL FEED SUPPLY CHECK VALVE														
1-WT-050	11715-CBM-102A	2 OF 2	E7	CHECK VALVE	0.75	2	C		CV	C O	03 03	TP-01			
	"B" STEAM GENERATOR CHEMICAL FEED SUPPLY CHECK VALVE														
1-WT-066	11715-CBM-102A	2 OF 2	D7	CHECK VALVE	0.75	2	C		CV	C O	03 03	TP-01			
	"C" STEAM GENERATOR CHEMICAL FEED SUPPLY CHECK VALVE														
1-WT-465	13075-CBM-102C	1 OF 1	E6	MANUAL GATE	3	2	AE	CIV	LT	C	OPB				
	WET LAY UP RETURN FROM "A" STEAM GENERATOR, INSIDE CONTAINMENT ISOLATION VALVE														
1-WT-468	13075-CBM-102C	1 OF 1	E5	MANUAL GATE	3	2	AE	CIV	LT	C	OPB				
	WET LAY UP RETURN FROM "A" STEAM GENERATOR, OUTSIDE CONTAINMENT ISOLATION VALVE														
1-WT-488	13075-CBM-102C	1 OF 1	D6	MANUAL GATE	3	2	AE	CIV	LT	C	OPB				
	WET LAY UP RETURN FROM "B" STEAM GENERATOR, INSIDE CONTAINMENT ISOLATION VALVE														
1-WT-491	13075-CBM-102C	1 OF 1	D5	MANUAL GATE	3	2	AE	CIV	LT	C	OPB				
	WET LAY UP RETURN FROM "B" STEAM GENERATOR, OUTSIDE CONTAINMENT ISOLATION VALVE														
1-WT-511	13075-CBM-102C	1 OF 1	B6	MANUAL GATE	3	2	AE	CIV	LT	C	OPB				
	WET LAY UP RETURN FROM "C" STEAM GENERATOR, INSIDE CONTAINMENT ISOLATION VALVE														
1-WT-514	13075-CBM-102C	1 OF 1	B5	MANUAL GATE	3	2	AE	CIV	LT	C	OPB				
	WET LAY UP RETURN FROM "C" STEAM GENERATOR, OUTSIDE CONTAINMENT ISOLATION VALVE														

NOTE 1

The Class 2, 3 and NC relief valves listed in Table 1 serve a thermal relief application and will be tested in accordance with Appendix I, I-1390.

NOTE 1 (Cont.)

Table 1

Thermal Relief Valve Number	ASME Code Class	Function
1-CC-RV-104A 1-CC-RV-104B 1-CC-RV-104C	NC	These relief valves protect the CC piping and components related to the recirculation air cooler from over-pressure in the event of an accident requiring isolation of this line (non-safety function). Credit is taken for these relief valves protecting penetration 9.
1-CC-RV-124A 1-CC-RV-124B 1-CC-RV-124C	3	These relief valves protect the CC piping and components related to the reactor shroud cooling coils from over-pressure due to heating in the event of an accident requiring isolation of this line. Since there is no remote operating isolation valve between these valves and the containment isolation valves, they also would offer protection for containment penetrations 16, 17 and 18 in the event that an inboard containment isolation valve failed to close.
1-CC-RV-125A 1-CC-RV-125B 1-CC-RV-125C	3	These relief valves protect the CC piping that supplies cooling water to the RCP thermal barrier heat exchangers from over-pressure in the event of an inadvertent actuation of the downstream trip valve. Thermal loads could cause the pressure in the isolated CC piping to increase past the design limit of the pressure boundary.
1-CC-RV-126	3	This relief valve protects the excess letdown heat exchanger (shell side) from over-pressure as a result of thermal expansion when the heat exchanger is isolated. The valve also provides protection for penetration 1.
1-CC-RV-128A 1-CC-RV-128B	3	These relief valves open to protect the RHR heat exchangers and related piping and containment penetrations from over-pressurization while the heat exchangers are isolated within the containment structure. During an accident, the temperature increase in containment could cause the water in a normally isolated heat exchanger to expand resulting in a significant increase in pressure with a potential for damage. These relief valves also provide protection for penetrations 2, 4 and 5.
1-CC-RV-131A 1-CC-RV-131B	3	These relief valves protect the RHR Seal Coolers from over-pressure as a result of thermal expansion when a cooler is isolated.

NOTE 1 (Cont.)

Table 1

Thermal Relief Valve Number	ASME Code Class	Function
1-HV-RV-1200 1-HV-RV-1201	3	These valves provide over-pressure protection to the control and relay room A/C chilled water pump suction headers.
1-HV-RV-1202A 1-HV-RV-1202B 1-HV-RV-1202C	3	These valves provide over-pressure protection (thermal) to the chillers when one of the chillers is isolated.
1-HV-RV-1205A 1-HV-RV-1205B 1-HV-RV-1205C	3	These valves provide over-pressure protection (thermal) to the condensers in the event one is isolated.
1-SI-RV-1857	2	This valve protects the HHSI injection line downstream of the BIT from over-pressure. This is primarily a thermal relief function to protect from pressure developed by the heat tracing in the isolated portion of the piping and BIT.
1-SW-RV-100A 1-SW-RV-100B 1-SW-RV-100C 1-SW-RV-100D	2	These valves open to provide over-pressure protection for an isolated heat exchanger and the associated containment penetration. During normal plant operation the recirculation spray headers and heat exchangers are drained, thus there is no mechanism where an over-pressure condition can occur. During an accident all heat exchangers are in operation and system pressure cannot exceed service water system pressure. If during the course of an accident isolation of a heat exchanger is required, the relief valves provide thermal relief protection to the heat exchanger and the penetration piping.
1-SW-RV-101A 1-SW-RV-101B	3	These valves open to provide over-pressure protection for an isolated component cooling heat exchanger if the heat exchanger is manually isolated for maintenance and subjected to thermal loads.

4.5 VALVE TEST PROGRAM RELIEF REQUESTS

Relief requests identify those ISTC Code requirements considered to be impractical or for which an alternative testing method is proposed. The basis for the relief request and the alternate testing to be performed is given.

RELIEF REQUEST V-1

Proposed alternative in accordance with 10CFR50.55a(a)(3)(i)
Alternative provides acceptable level of quality and safety.

1.0 ASME Code Components Affected

Valve(s): 1-CH-MOV-1115B, 1-CH-MOV-1115D, 1-SI-47, 1-SI-MOV-1885A, 1-SI-MOV-1885B, 1-SI-MOV-1885C, 1-SI-MOV-1885D

System: Chemical and Volume Control and Safety Injection

Category: A for 1-CH-MOV-1115B and D, and 1-SI-MOV-1885A-D
AC for 1-SI-47

Class: 2

Function: RWST Isolation Valves

2.0 Applicable Code Edition and Addenda

ASME OM Code, 2004 Edition

3.0 Applicable Code Requirements

ISTC-3630(f) - Valves or valve combinations with leakage rates exceeding the values specified by the Owner in ISTC-3630(e) above shall be declared inoperable and be either repaired or replaced.

4.0 Reason for Request

Valves 1-CH-MOV-1115B and D, and 1-SI-47 are in the supply line to the charging pumps from the RWST. Valves 1-SI-MOV-1885A and C are in series, and 1-SI-MOV-1885B and D are in series, and are on test lines that run from the discharge of the low head SI pumps to the RWST. During recirculation mode transfer, the RWST is isolated and the low head SI pumps recirculate highly contaminated water from the containment sump to the reactor vessel.

The RWST isolation valves work as a system of valves to protect the RWST from the contaminated sump water. Permissible valve leakage rates are based on each valve's possible contribution to the total allowable leakage rate to the RWST. When the leakage rate from each valve has been measured and summed with the leakage rates of the other RWST isolation valves, an individual valve's permissible leakage rate may have been exceeded but the overall allowable leakage to the RWST may not have been exceeded. In these cases, a repair or replacement may not be necessary because the system of isolation valves has been verified to be performing acceptably.

In addition to repair or replacement as corrective actions, an evaluation can be performed which demonstrates that even if a valve has exceeded its permissible leakage rate, the overall leakage rate to the RWST will be maintained below the overall allowable RWST leakage rate and hence the system function is satisfied.

This evaluation should provide a high level of assurance that delaying the repair or replacement will not result in exceeding the overall limit before the next leak rate test. The evaluation should include a determination of the cause for the individual valve leakage. The evaluation should also address the effect of the degradation mechanism for the valve on the ability of the valve group to maintain overall leakage to the RWST below the overall allowable leakage rate during the subsequent 24 month interval. Evaluations will be documented and retained in plant records, and are available for subsequent review. This alternative to the requirements of ISTC-3630(f) provides an acceptable level of quality and safety.

5.0 Proposed Alternatives and Bases for Use

In addition to repair or replacement as corrective actions, an evaluation can be performed which demonstrates that even if a valve has exceeded its permissible leakage rate, the overall leakage rate to the RWST will be maintained below the overall allowable RWST leakage rate. No repair or replacement is necessary if the evaluation is performed and system leakage is projected to be maintained below the overall permissible leakage rate throughout the subsequent 24 month interval.

Using the provisions of this relief request as an alternative to the specific requirements of ISTC-3630(f) identified above will provide adequate indication of valve performance and continue to provide an acceptable level of quality and safety. Therefore, pursuant to 10 CFR 50.55a(a)(3)(i), Relief Request V-1 requests relief from the specific ISTC Code requirements identified in this relief request.

6.0 Duration of the Proposed Alternative

The proposed alternatives described in Relief Request V-1 will be used for the North Anna Power Station Unit 1 Fourth Ten Year Inservice Testing Interval.

7.0 Precedents

A similar relief request for the North Anna Unit 1 Third Ten Year Inservice Testing Interval was approved by the NRC in their safety evaluation entitled "North Anna Power Station, Units Nos.1 and 2 Re: Inservice testing Program for Pumps and Valves, Third Ten Year Interval Update (TAC Nos. MB2221 and MB2222)" dated January 28, 2002.

8.0 References

1. ASME OM Code, 2004 Edition

RELIEF REQUEST V-2

Proposed alternative in accordance with 10CFR50.55a(a)(3)(i)
Alternative provides acceptable level of quality and safety.

1.0 ASME Code Components Affected

Refer to Table V-2

2.0 Applicable Code Edition and Addenda

ASME OM Code, 2004 Edition

3.0 Applicable Code Requirements

ISTA-3130(b) states: "Code Cases shall be applicable to the edition and addenda specified in the test plan." The edition and addenda specified in the test plan for the fourth Ten-Year interval for the North Anna Nuclear Power Plant is the ASME OM code 2004 Edition."

4.0 Reason for Request

Code Case OMN-8 "Alternative Rules for Preservice and Inservice Testing of Power-Operated Valves That Are Used for System Control and Have a Safety Function per OM-10," contains no applicability statement. In the latest edition/addenda incorporated by reference in 10 CFR 50.55a(b)(3) (i.e., the 2001 Edition with Addenda through the OMb-2003), the expiration date given for OMN-8 is November 20, 2006. OMN-8 is included in the 2006 Addenda to the 2004 Edition of the OM Code with a new expiration date of November 20, 2009; however, neither the 2004 Edition of the OM Code nor any subsequent Addenda have been incorporated by reference in 10 CFR 50.55a(b)(3). Paragraph 10 CFR 50.55a(b)(6) references RG 1.192, which approves the use of Code Case OMN-8. Code Case OMN-8 provides an alternative to stroke time testing power operated control valves that have only a fail safe safety function. The pneumatically power-operated control valves listed in Table V-2 have only a fail safe safety function.

5.0 Proposed Alternatives and Bases for Use

The requirements of OMN-8 will be applied to the valves listed in Table V-2 in lieu of the provisions for power-operated control valve testing specified in paragraphs ISTC-5131, ISTC-5132 and ISTC-5133(b) in Subsection ISTC of the 2004 Edition of the ASME OM Code.

Note that paragraphs ISTC 4.2.4, ISTC 4.2.8, ISTC 4.2.9(b) and ISTC 1.2(b) identified in OMN-8 are from the 1995 Edition of Subsection ISTC and correspond to paragraphs ISTC-5131, ISTC-5132, ISTC-5133(b), and ISTC-1200(b) from the 2004 Edition for pneumatically power-operated valves, respectively.

Using the provisions of this relief request as an alternative to the specific requirements of ISTC-3630(f) identified above will provide adequate indication of valve performance and continue to provide an acceptable level of quality and safety. Therefore, pursuant to 10 CFR 50.55a(a)(3)(i), Relief Request V-2 requests relief from the specific ISTC Code requirements identified in this relief request.

6.0 Duration of the Proposed Alternative

The proposed alternatives described in Relief Request V-2 will be used for the North Anna Power Station Unit 1 Fourth Ten Year Inservice Testing Interval.

7.0 Precedents

The following relief request for another plant that is similar to Relief Request V-2 was approved by the NRC.

Relief Request GV-RR-003 was submitted by Calvert Cliffs and approved by the NRC by letter dated 6/18/2008 (TAC NOS. MD5998 to MD6011).

8.0 References

1. ASME OM Code, 2004 Edition

Table V-2

Valve Number	System	OM Category	ASME Class	Function
1-CH-FCV-1113A	Chemical and Volume Control	B	3	Alternate Emergency Boration Line Flow Control Valve
1-CH-FCV-1114A	Chemical and Volume Control	B	NC	Primary Grade Water Flow Control Valve
1-FW-HCV-100A 1-FW-HCV-100B 1-FW-HCV-100C	Auxiliary Feedwater	B	3	Standby Auxiliary Feedwater Supply Hand Control Valves
1-FW-PCV-159A 1-FW-PCV-159B	Auxiliary Feedwater	B	3	Auxiliary Feedwater Pressure Control Valves
1-HV-PCV-1235A1 1-HV-PCV-1235B1 1-HV-PCV-1235C1	Control Room Air Conditioning	B	3	Control Room Condenser Water Bypass Line Pressure Control Valves
1-HV-PCV-1235A2 1-HV-PCV-1235B2 1-HV-PCV-1235C2	Control Room Air Conditioning	B	3	Control Room Condenser Water Line Pressure Control Valves
1-MS-PCV-101A 1-MS-PCV-101B 1-MS-PCV-101C	Main Steam	B	2	Main Steam Header Discharge to Atmosphere Pressure Control Valves
1-SI-HCV-1936	Safety Injection	A	2	Waste Gas from Accumulators to Charcoal Filter Line Hand Control Valve
1-SW-TCV-102A 1-SW-TCV-102B 1-SW-TCV-102C	Service Water	B	3	Service Water from Charging Pump Lube Oil Cooler Temperature Control Valves

RELIEF REQUEST V-3

Proposed alternative in accordance with 10CFR50.55a(a)(3)(i)
Alternative provides acceptable level of quality and safety.

1.0 ASME Code Components Affected

All Class 2 and 3 safety and relief valves, excluding the MSSVs, as listed in Table V-3.

2.0 Applicable Code Edition and Addenda

ASME OM Code, 2004 Edition

3.0 Applicable Code Requirements

ISTC Appendix I, I-8120, "Compressible Fluid Services Other Than Steam", I-8120(h) requires that a minimum of 5 minutes shall elapse between successive openings.

ISTC Appendix I, I-8120, "Liquid Service", I-8130(g) requires that a minimum of 5 minutes shall elapse between successive openings.

4.0 Reason for Request

The ASME OM Code requires a minimum of two consecutive valve actuations to establish the lift setpoint of safety and relief valves and that a minimum of 5 minutes elapse between successive tests. For the valves listed in Table V-3, the requirement for verifying temperature stability by waiting 5 minutes between successive lift setpoint tests is inappropriate and adds no value. Lift setpoint testing is conducted using water or nitrogen as the test medium, and the tests are performed when the valve and the test medium are at the same temperature. There is a negligible effect on lift setpoint due to minor temperature deviations that might occur during testing.

Eliminating the 5-minute wait time will minimize system outage times and radiation exposure. Class 2 and 3 safety and relief valves associated with contaminated systems are bench tested in the hot shop, located within the RCA in the Auxiliary Building, to prevent contamination.

Entry into the testing facility often requires full Anti-C's. During the test, personnel are exposed to low background radiation levels present in the Auxiliary Building hot shop as well as the radiation levels associated with the specific valve being tested. The proposed elimination of the hold time between successive tests for Class 2 and 3 safety/relief valves tested under ambient conditions using a test medium at ambient conditions reduces the duration of each test. Most importantly, reducing the hold times reduces the length of time that the test personnel must spend in close proximity to the valve. As a result, personnel radiation exposure is reduced.

For all safety and relief valves, including those located in "clean areas" that are bench-tested in the Mechanical Maintenance Shop, the proposed elimination of the hold time between successive tests will reduce the duration of each test. Since there are numerous safety/relief valve tests for both units and most require at least two people, the proposed elimination of the hold time between successive tests is expected to also result in a significant cumulative reduction in limited manpower resources.

5.0 Proposed Alternatives and Bases for Use

For Class 2 and 3 safety and relief valves, excluding the MSSVs, tested under ambient conditions using test medium at ambient conditions, the 5-minute hold requirement between successive openings will be deleted.

In accordance with 1-8120(a), and 1-8130(a), the test medium used will be the same as the normal system operating fluid and temperature for which the valves in Table V-3 were designed. For liquid service this will be water. For compressible fluid services other than steam, this will be nitrogen. In both cases, the test stand and surrounding environment ambient temperature conditions are relatively fixed with negligible changes occurring over the set pressure and seat tightness test determinations. There is a negligible effect on valve setpoint due to minor temperature deviations that might occur at these conditions.

Using the provisions of this relief request as an alternative to the specific requirements of I-8120(h) and I-8130(g) identified above will provide adequate indication of valve performance and continue to provide an acceptable level of quality and safety. Therefore, pursuant to 10 CFR 50.55a(a)(3)(i), Relief Request V-3 requests relief from the specific ISTC Code requirements identified in this relief request.

6.0 Duration of the Proposed Alternative

The proposed alternatives described in Relief Request V-3 will be used for the North Anna Power Station Unit 1 Fourth Ten Year Inservice Testing Interval.

7.0 Precedents

The following relief request for another plant that is similar to Relief Request V-3 was approved by the NRC

Relief Request GV-RR-001 was submitted by Calvert Cliffs and approved by the NRC by letter dated 6/18/2008 (TAC NOS. MD5998 to MD6011).

8.0 References

1. ASME OM Code, 2004 Edition

Table V-3

Valve Number	System	ASME Class	Test Medium	Component Protected
1-CC-RV-124A	Component Cooling	3	Water	Containment penetration
1-CC-RV-124B	Component Cooling	3	Water	Containment penetration
1-CC-RV-124C	Component Cooling	3	Water	Containment penetration
1-CC-RV-125A	Component Cooling	3	Water	RCP thermal barrier
1-CC-RV-125B	Component Cooling	3	Water	RCP thermal barrier
1-CC-RV-125C	Component Cooling	3	Water	RCP thermal barrier
1-CC-RV-126	Component Cooling	3	Water	Containment penetration
1-CC-RV-128A	Component Cooling	3	Water	RHR heat exchanger
1-CC-RV-128B	Component Cooling	3	Water	RHR heat exchanger
1-CC-RV-131A	Component Cooling	3	Water	RHR pump seal cooler
1-CC-RV-131B	Component Cooling	3	Water	RHR pump seal cooler
1-CH-RV-1203	Chemical and Volume Control	2	Water	Containment penetration
1-CH-RV-1382A	Chemical and Volume Control	2	Water	Containment penetration
1-CH-RV-1382B	Chemical and Volume Control	2	Water	Containment penetration
1-FW-RV-100	Auxiliary Feedwater	3	Water	Pump P-2 discharge header
1-HV-RV-1200	Control Room Chilled Water	3	Water	Pump suction headers
1-HV-RV-1201	Control Room Chilled Water	3	Water	Pump suction headers
1-HV-RV-1202A	Control Room Chilled Water	3	Water	Chiller
1-HV-RV-1202B	Control Room Chilled Water	3	Water	Chiller
1-HV-RV-1202C	Control Room Chilled Water	3	Water	Chiller
1-HV-RV-1205A	Control Room Condenser Water	3	Water	Condenser
1-HV-RV-1205B	Control Room Condenser Water	3	Water	Condenser
1-HV-RV-1205C	Control Room Condenser Water	3	Water	Condenser
1-RH-RV-1721A	Residual Heat Removal	2	Water	Pump suction line
1-RH-RV-1721B	Residual Heat Removal	2	Water	Pump suction line

Table V-3

Valve Number	System	ASME Class	Test Medium	Component Protected
1-SI-RV-1845A	Safety Injection	2	Water	LHSI pump discharge line
1-SI-RV-1845B	Safety Injection	2	Water	LHSI header RCS to cold leg
1-SI-RV-1845C	Safety Injection	2	Water	LHSI pump discharge line
1-SI-RV-1857	Safety Injection	2	Water	Boron injection tank
1-SI-RV-1858A	Safety Injection	2	Nitrogen	Accumulator
1-SI-RV-1858B	Safety Injection	2	Nitrogen	Accumulator
1-SI-RV-1858C	Safety Injection	2	Nitrogen	Accumulator
1-SW-RV-100A	Service Water	2	Water	Recirculation spray heat exchanger
1-SW-RV-100B	Service Water	2	Water	Recirculation spray heat exchanger
1-SW-RV-100C	Service Water	2	Water	Recirculation spray heat exchanger
1-SW-RV-100D	Service Water	2	Water	Recirculation spray heat exchanger
1-SW-RV-101A	Service Water	3	Water	CC heat exchanger
1-SW-RV-101B	Service Water	3	Water	CC heat exchanger

4.6 VALVE TEST PROGRAM COLD SHUTDOWN JUSTIFICATIONS

ISTC-3521 and ISTC-3522 allow for the full stroke exercising of valves during Cold Shutdown (but not more frequently than every three months) if it is not practical to exercise the valves during normal operation. Therefore, no request for relief from testing every three months is necessary.

However, ISTC-9200 requires that these valves be specifically identified by the owner. The cold shutdown justifications identify and provide the technical basis for valves exercised during cold shutdown but not during normal operation.

COLD SHUTDOWN JUSTIFICATION CSV-1

System : Component Cooling

Valve(s): 1-CC-TV-101A 1-CC-TV-102E
1-CC-TV-101B 1-CC-TV-102F
1-CC-TV-102A 1-CC-TV-104A
1-CC-TV-102B 1-CC-TV-104B
1-CC-TV-102C 1-CC-TV-104C
1-CC-TV-102D

Category: A

Class : 2

Function: Reactor Coolant Pump CC Supply and Return Containment Isolation Valves

Cold Shutdown Justification

Testing these trip valves to the closed position interrupts component cooling (CC) flow to the Reactor Coolant Pumps (RCPs) thermal barriers, lube oil, stator and/or shroud coolers. The motor for each RCP is vulnerable to loss of CC flow. If a CC trip valve fails closed during testing and CC flow is lost, damage to the operating RCP will result in approximately 10 minutes. In this case, the RCP will be tripped before damage occurs. The increased level of safety gained from exercising these valves while the RCPs are operating during normal operation or cold shutdowns does not justify the operational consequences should they fail in the closed position. The valve controllers do not allow for a part-stroke exercise test.

Testing Frequency

These valves will be full stroke exercised every cold shutdown when the RCPs are secured but not more frequently than once every three months.

COLD SHUTDOWN JUSTIFICATION CSV-2

System : Chemical & Volume Control System

Valve(s): 1-CH-MOV-1350

Category: B

Class : 3

Function: Emergency Boration Line Valve

Cold Shutdown Justification

Full or part-stroke exercising this valve during power operation would cause a sudden increase in reactor coolant system boron inventory by providing flow from the emergency boration path to charging pump suctions. Also, the valve controller for 1-CH-MOV-1350 does not allow for a part-stroke exercise test. The increased level of safety gained from exercising this valve during power operation does not justify the operational consequences associated with reactivity transients.

Testing Frequency

Valve 1-CH-MOV-1350 will be full stroke exercised every cold shutdown but not more frequently than once every three months.

COLD SHUTDOWN JUSTIFICATION CSV-3

System : Chemical & Volume Control System

Valve(s): 1-CH-TV-1204A 1-CH-LCV-1460A
1-CH-TV-1204B 1-CH-LCV-1460B

Category: B for 1-CH-LCV-1460A and B
A for 1-CH-TV-1204A and B

Class : 1 for 1-CH-LCV-1460A and B
2 for 1-CH-TV-1204A and B

Function: Letdown Line Isolation Valves

Cold Shutdown Justification

Exercising these valves during power operation interrupts letdown flow from the reactor coolant system (RCS) to the volume control tank. If the valves should fail closed, reactor coolant inventory control would be lost.

The pressurizer level control program controls reactor coolant inventory by regulating the operation of the charging flow control valve so that the charging input flow to the RCS and reactor coolant pump seal injection flow into the RCS matches letdown flow.

Also, exercising these valves during normal operation will interrupt letdown flow through the regenerative heat exchanger. This flow interruption would allow a slug of relatively cool charging water to thermal shock the nozzle connecting the 3" charging line to the 27" loop 2 cold leg injection line. The valve controllers do not allow for a part stroke exercise test.

Testing Frequency

These valves will be full stroke exercised every cold shutdown but not more frequently than once every three months.

COLD SHUTDOWN JUSTIFICATION CSV-4

System : Chemical & Volume Control System

Valve(s): 1-CH-MOV-1115B
1-CH-MOV-1115C
1-CH-MOV-1115D
1-CH-MOV-1115E

Category: A for 1-CH-MOV-1115B and D
B for 1-CH-MOV-1115C and E

Class : 2

Function: Charging Pump Supply from the VCT and RWST Isolation Valves

Cold Shutdown Justification

Full or part-stroke exercising these valves during power operation would require that charging pump suction be aligned with the Refueling Water Storage Tank. That alignment would cause a sudden increase in reactor coolant system boron inventory. The increased level of safety gained from full or part-stroke exercising these valves during power operation does not justify the operational consequences of reactivity transients.

Testing Frequency

These valves will be full stroke exercised every cold shutdown but not more frequently than once every three months.

COLD SHUTDOWN JUSTIFICATION CSV-5

System : Chemical & Volume Control System

Valve(s): 1-CH-MOV-1289A
1-CH-MOV-1289B

Category: B

Class : 1 for 1-CH-MOV-1289A
2 for 1-CH-MOV-1289B

Function: Main Charging Header Isolation Valves

Cold Shutdown Justification

Varying letdown flow through the Regenerative Heat Exchanger will cause variations in charging flow temperatures. This is not desirable since decreased charging temperatures result in reactivity increases and thermal stress on the piping and heat exchanger.

Full or part-stroke exercising these valves during power operation would isolate the normal charging flow path from the charging pumps to the Reactor Coolant System. Also, the valve controllers do not allow for a part-stroke exercise test. The small increase in safety gained by exercising these valves every three months does not justify the operational consequences of providing an alternate charging flow path during power operation.

Testing Frequency

These valves will be full stroke exercised every cold shutdown but not more frequently than once every three months.

COLD SHUTDOWN JUSTIFICATION CSV-6

System : Feedwater

Valve(s): 1-FW-FCV-1478 1-FW-MOV-154A
1-FW-FCV-1479 1-FW-MOV-154B
1-FW-FCV-1488 1-FW-MOV-154C
1-FW-FCV-1489
1-FW-FCV-1498
1-FW-FCV-1499

Category: B

Class : NC

Function: Main Feedwater Regulating, Bypass and Isolation Valves

Cold Shutdown Justification

These valves are in positions required to sustain power operation. Full stroke exercising the valves would result in a reactor trip. The main feedwater regulating valves 1-FW-FCV-1478, 1488 and 1498 move during normal operation as they perform their regulating function. In order to perform a partial stroke test during normal operation, the plant would have to reduce power to cause the valve disks to move. Reducing power for the purpose of performing an exercise test is considered impractical according to the NRC response to Comment 2.4.5-1 in NUREG-1482, Revision 0, Appendix G. Appendix G was omitted from NUREG-1482, Revision 1, along with Comment 2.4.5-1. However, IST Engineering still considers reducing power for the purpose of performing an exercise test as being impractical.

The bypass valves 1-FW-FCV-1479, 1489 and 1499 are used normally during plant startup. During this startup period, their safety function is to close. During normal operation, these valves typically remain closed and, thus are passive in the closed position. Therefore, the bypass valves do not need to be partial stroke tested every three months. The valve controllers for the motor operated valves 1-FW-MOV-154A, B and C do not allow for a part stroke exercise test.

Testing Frequency

These valves will be full stroke exercised every cold shutdown but not more frequently than once every three months.

COLD SHUTDOWN JUSTIFICATION CSV-7

System : Main Steam

Valve(s): 1-MS-NRV-101A
1-MS-NRV-101B
1-MS-NRV-101C

Category: C

Class : 2

Function: Main Steam Header Non-return Valves

Cold Shutdown Justification

Valve Description

The main steam non-return valves (NRVs) at North Anna Power Station are located in the main steam valve house and are a globe type stop check design. The valves measure approximately 16 feet from the bottom of the valve body to the top of the hand wheel and weigh almost 24,000 lbs. The disk is welded to a hollow piston and the whole assembly is free to move about 25 vertical inches within the valve body cylinder. The disk measures 25.5 inches across and the disk and piston assembly weighs approximately 1,200 lbs. When the main steam system is not inservice, a motor operator is used to run the valve stem down onto the disk to secure the main steam line.

The valves open to allow steam to the turbine. For accident conditions, the non-return valves in conjunction with the main steam trip valves prevent the blow down of more than one steam generator for any break location, even if one valve fails to close. For example, for a break upstream of the trip valve in one line, the closure of either the non-return valve in that line or the trip valves in the other lines prevents the blow down of the other steam generators.

Method of Testing

The piping downstream of each non-return valve leads to a common distribution manifold and cannot be isolated. Therefore, performing a back seat test using flow is not practical. Also, valve disassembly and inspection are not practical alternatives due to the size of the valve and the weight of the disk.

However, an alternative exists to verify that the disk moved to the valve seat during reactor coolant system (RCS) cool down. When the RCS temperature is between 350 °F and 195 °F during the cool down process, the main steam trip valves are closed. Then the main steam non-return valves close in response to the loss of steam flow.

After the main steam trip valve is closed, diagnostic test equipment can be used to determine the position of the disk of the NRV. After the main steam flow is stopped, the non-return valve stem is run down onto the disk after the disk returns to the seat. A change in the running force within the normal travel of the stem indicates a resistance to stem movement (i.e., a stuck disk). Verifying that the stem travels to the seated disk with nominal changes in the running force indicates that the disk is on the seat. The test requires that the cool down process be delayed between one to two hours to setup the instrumentation and to perform the test on each of three valves.

The diagnostic test equipment provides two methods for detecting changes in the running force. The test can be performed either at the valve by monitoring the yoke strain using a permanently mounted force sensor or at the motor control center (MCC) by monitoring motor current. The first method converts yoke strain directly to stem load. A signature is generated that will show any changes in the stem load which would indicate a stuck or binding valve disk. The second and more sensitive method monitors a single phase of the motor current. The motor current information is used to generate motor power and power factor signatures which are very sensitive to changes in stem load. Changes in motor load would again indicate a stuck or binding valve disk. In both methods, the valve switch probes are monitored to determine the status of the torque and limit switches, and the open and closed bypass switches in the motor operator control circuit over the course of stem travel. The second method is preferred.

Testing Frequency Discussion

Full stroke or part stroke exercising of these valves during power operation would result in a turbine and reactor trip. Plant cool down procedures require that the NRV stem be run down onto the disk to isolate the main steam system after main steam flow is stopped. The diagnostic testing must be performed when the NRVs are initially closed during the cool down to accurately assess the piston-disk assembly's as-found position. As indicated above, the diagnostic test will delay the cool down process from between one to two hours. Some cold shutdown outages are forced outages that result from exceeding a Technical Specification limit such as unidentified RCS leakage. The emphasis in a forced outage cool down is to reach cold shutdown as rapidly as possible and to mitigate the cause of the forced outage. Stopping this process to perform the

diagnostic test would complicate the operators task to secure the plant and may reduce plant safety. However, during planned cold shutdowns where there are no mitigating circumstances, there is adequate time to notify the test personnel, carry the equipment into the field and perform the test.

There is no evidence in the valve history that a valve has stuck in the partial open position. The piston-disk assembly is not attached to any other internal part, the 1,200 lb piston-disk assembly is maintained parallel within the valve body cylinder and the main steam system is very clean. Consequently, there is no mechanism to prevent the disk from dropping from the full open position to the valve seat.

Testing Frequency

The diagnostic test described above will be performed on each main steam non-return valve during the cool down process going into each planned cold shutdown. This test will not be performed more often then once every three months. The valves are verified open during normal plant operation.

COLD SHUTDOWN JUSTIFICATION CSV-8

System : Main Steam

Valve(s): 1-MS-TV-109

Category: B

Class : 3

Function: Main Steam High Pressure Drain to Condenser Isolation Valve

Cold Shutdown Justification

Full or part-stroke exercising this valve during power operation would cause undesirable pressure transients in the High Pressure Secondary Drains System. Also, the valve controller does not allow for a part-stroke exercise test. The increased level of safety gained from exercising this valve during power operation does not justify the operational consequences of these pressure variations.

Testing Frequency

This valve will be full stroke exercised every cold shutdown but not more frequently than once every three months.

COLD SHUTDOWN JUSTIFICATION CSV-9

System : Main Steam

Valve(s): 1-MS-TV-101A
1-MS-TV-101B
1-MS-TV-101C

Category: B

Class : 2

Function: Main Steam Header Trip Valves

Cold Shutdown Justification

These valves are in positions required to sustain power operation. Full or part-stroke exercising these valves during normal operation would result in a reactor trip and safety injection. Also, the valve controllers do not allow for a part-stroke exercise test.

Testing Frequency

These valves will be full stroke exercised every cold shutdown but not more frequently than once every three months.

COLD SHUTDOWN JUSTIFICATION CSV-10

System : Safety Injection

Valve(s): 1-SI-MOV-1836
1-SI-MOV-1869A
1-SI-MOV-1869B
1-SI-MOV-1890A
1-SI-MOV-1890B

Category: B

Class : 1

Function: High Head (1-SI-MOV-1836, 1869A and B) and Low Head (1-SI-MOV-1890 A and B) SI to RCS Containment Isolation Valves

Cold Shutdown Justification

These valves provide isolation for alternate safety injection paths to the Reactor Coolant System. As verified by Technical Specification SR 3.5.2.1, they are closed with power removed from the valve actuators during Modes 1, 2, and 3. Full or part-stroke exercising these valves during power operation would be in violation of Technical Specifications. Also, the valve controllers do not allow for a part-stroke exercise test.

Testing Frequency

These valves will be full stroke exercised every cold shutdown but not more frequently than once every three months.

COLD SHUTDOWN JUSTIFICATION CSV-11

System : Safety Injection

Valve(s): 1-SI-MOV-1865A
1-SI-MOV-1865B
1-SI-MOV-1865C

Category: B

Class : 2

Function: SI Accumulator Discharge Isolation Valves

Cold Shutdown Justification

The Accumulator Discharge Isolation Valves are in their safety positions with power removed from the valve actuators during Modes 1, 2, and 3, and when the reactor coolant system pressure is greater than 2000 psig as verified in Technical Specification SR 3.5.1.5. In Modes 1 and 2, and in Mode 3 with the reactor coolant system pressure greater than 1000 psig, the accumulator operability requirements are based on full power operation (Technical Specification LCO 3.5.1). Full or part-stroke exercising during power operation would be in violation of Technical Specification LCO 3.5.1 and decrease plant safety. Also, the valve controllers do not allow for a part-stroke exercise test. During cold shutdown, the reactor coolant system pressure must be less than 1000 psig before the valves are tested.

Testing Frequency

These valves will be full stroke exercised every cold shutdown when the reactor coolant system pressure is less than 1000 psig but not more frequently than once every three months.

COLD SHUTDOWN JUSTIFICATION CSV-12

System : Instrument Air

Valve(s): 1-IA-944 1-IA-963
1-IA-948 1-IA-967
1-IA-952 1-IA-971
1-IA-959 1-IA-975

Category: AC

Class : NC

Function: Air Accumulator Isolation Check Valves

Cold Shutdown Justification

Check valves 1-IA-944, 948 and 952 isolate the normal instrument air supply from the backup bottled air supply for the main steam pressure control valves 1-MS-PCV-101A, B and C. Valves 1-IA-959, 963 and 971 isolate the normal instrument air supply to the auxiliary feedwater valves 1-FW-HCV-100A, B and C. Valves 1-IA-967 and 975 isolate the normal instrument air supply to the auxiliary feedwater valves 1-FW-PCV-159A and B.

To back seat test check valves 1-IA-944, 948 and 952, the instrument air system must be isolated to all three main steam pressure control valves and the lines vented. To back seat test check valves 1-IA-959, 963, 967, 971 and 975, the instrument air system must be isolated to all five auxiliary feedwater valves and the lines vented. Isolating this many valves that are important to safety during normal operation would degrade the safety of the plant and be disruptive to plant operation.

Testing Frequency

These check valves will be exercised open and closed every cold shutdown but not more frequently than once every three months.

COLD SHUTDOWN JUSTIFICATION CSV-13

System : Main Steam

Valve(s): 1-MS-TV-113A
1-MS-TV-113B
1-MS-TV-113C

Category: B

Class : 2

Function: Main Steam Trip Bypass Valves

Cold Shutdown Justification

These trip valves are opened only during plant startup to provide flow paths for steam from each of the steam generators to equalize pressure across the main steam trip valves. They remain closed during normal operation to prevent the unrestricted release of steam from multiple steam generators in the event of a downstream steam line rupture and to isolate the steam generators (automatically close on steam line or IHH isolation) in the event of a LOCA or steam generator tube rupture. When closed, they provide isolation of the unaffected steam generators thus ensuring an adequate supply of steam for AFW pump turbine operation. They are designated as containment isolation valves (non-leak tested). There is a remote possibility that these valves would have to close during plant startup; therefore, they are considered active to the closed position only during plant startup. During normal operation they are passive in the closed position and do not require quarterly testing. They will be tested prior to startup to ensure operability.

Testing Frequency

These valves will be full stroke exercised every cold shutdown prior to startup but not more frequently than once every three months.

COLD SHUTDOWN JUSTIFICATION CSV-14

System : Reactor Coolant

Valve(s): 1-RC-PCV-1455C
1-RC-PCV-1456

Category: BC

Class : 1

Function: Pressurizer Power Operated Pressure Control Valves

Cold Shutdown Justification

Full or part-stroke exercising these valves during power operations would cause high differential pressure across the PCV Block Valves. Although these valves are designed to accommodate this differential pressure, cycling would eventually degrade the block valves seating capability, thus decreasing plant safety. Also, the valve controllers do not allow for a part-stroke exercise test.

Testing Frequency

These valves will be full stroke exercised every cold shutdown but not more frequently than once every three months.

COLD SHUTDOWN JUSTIFICATION CSV-15

System : Service Water

Valve(s): 1-SW-MOV-108A
1-SW-MOV-108B

Category: B

Class : 3

Function: Component Cooling Heat Exchanger Service Water Supply Isolation Valves

Cold Shutdown Justification

These isolation valves are located in series on service water supply to the component cooling heat exchangers. The component cooling heat exchangers carry a majority of the heat load for the service water system. When the heat exchangers are isolated, service water flow decreases to less than 10% of normal flow. Due to the design of the service water pumps, the pumps experience harmful high-magnitude vibrations as the service water flow decreases through a range from 7000 gpm to 6000 gpm. These pumps cannot be stopped during the valve exercise test because they provide service water to other plant heat loads. Changing the service water system flow through the component cooling water heat exchangers will cause unnecessary plant transients. Therefore, performing the valve exercise test as frequently as once every three months should be avoided due to the harmful effects that the testing has on the service water pumps.

The valve controllers do not allow for a partial-stroke exercise test. To reduce the harmful effects of high-magnitude vibrations on the service water pumps, the isolation valves will be full-stroke exercised on a cold shutdown frequency.

Testing Frequency

These valves will be full stroke exercised every cold shutdown but not more frequently than once every three months.

COLD SHUTDOWN JUSTIFICATION CSV-16

System : Quench Spray

Valve(s): 1-QS-MOV-102A
1-QS-MOV-102B

Category: B

Class : 2

Function: Chemical Addition Tank Discharge Isolation Valves

Cold Shutdown Justification

These normally closed six inch motor operated isolation valves are located in parallel flow paths from the refueling water chemical addition tank to the reactor water storage tank (RWST). The piping between the isolation valves and the chemical addition tank contains high concentrations of sodium hydroxide. To exercise the motor operated valves, downstream manual isolation valves must be closed to prevent the sodium hydroxide from entering the quench spray system and chemically contaminating the boric acid solution in the RWST.

After the motor operated isolation valves are stroked open and closed, the piping between the motor operated valves and the downstream manual isolation valves must be drained of sodium hydroxide. Approximately five gallons of highly caustic fluid are drained into a plastic container after each valve test. Draining the piping presents a significant personnel hazard. Sodium hydroxide causes severe burns if it comes in contact with the skin. The test personnel must wear rubber gloves, boots and face shields.

The drains are located outdoors and are near to the ground, which makes collection difficult. If any sodium hydroxide were released to the ground, it would create a reportable environmental release event. The soil that is contaminated must be neutralized by the chemistry department. Partial stroke testing of these valves presents the same hazards as full stroke testing.

To reduce the number of times that test personnel are exposed to sodium hydroxide, the motor operated isolation valves will be tested on a cold shutdown frequency.

Testing Frequency

These valves will be full stroke exercised on a cold shutdown frequency but not more frequently than once every three months.

COLD SHUTDOWN JUSTIFICATION CSV-17

System : Residual Heat Removal

Valve(s): 1-RH-7
1-RH-15

Category: C

Class : 2

Function: RHR Pump Discharge Check Valves

Cold Shutdown Justification

These RHR pump discharge check valves can only be exercised to the open position and verified closed when the RHR pumps 1-RH-P-1A and 1-RH-P-1B are running. The low pressure pumps take suction from and discharge to the reactor coolant system which operates at 2235 psig. This pressure is well above the operating pressure of the pumps, therefore, testing during normal operation is not practical.

Testing Frequency

These valves will be full stroke exercised every cold shutdown but not more frequently than once every three months.

COLD SHUTDOWN JUSTIFICATION CSV-18

System : Chemical & Volume Control

Valve(s): 1-CH-MOV-1380
1-CH-MOV-1381

Category: A

Class : 2

Function: Reactor Coolant Pump Seal Water Return Containment Isolation Valves

Cold Shutdown Justification

Charging flow to the reactor coolant pump seals is required at all times while the pumps are in operation. Failure of one of these valves in the closed position could result in damage to the reactor coolant pump seal, thus placing the plant in an unsafe condition. Also, the valve controllers do not allow for a part-stroke exercise test. The reactor coolant pumps must be secured and reactor coolant pressure must be above 100 psig to perform the exercise tests. If the reactor coolant pressure is less than 100 psig, there could be back flush past the reactor coolant pump seals, which could damage the seals.

Testing Frequency

Exercise every cold shutdown when the reactor coolant pumps are secured and reactor coolant pressure is above 100 psig but not more frequently than once every three months.

COLD SHUTDOWN JUSTIFICATION CSV-19

System : Reactor Coolant

Valve(s): 1-RC-SOV-101A-1
1-RC-SOV-101A-2
1-RC-SOV-101B-1
1-RC-SOV-101B-2

Category: B

Class : 1

Function: Reactor Vessel Vent Line Isolation Valves

Cold Shutdown Justification

These valves are the Reactor Vessel Head Vent Valves. Full or part-stroke exercising these valves at power could release reactor coolant into the reactor vessel refueling cavity. Stroking of these valves has been performed while the Reactor Coolant System (RCS) was pressurized. This test revealed that when the upstream valve was stroked, the downstream valve tended to lift and then reseat due to the motive force of the steam. As long as these valves remain closed under RCS pressure, they are an effective isolation boundary. However, these valves should not be stroked while the RCS is fully pressurized, because a valve could develop a leak across the seat during the exercise test due to the high differential pressures and exposure to steam. These valves will be exercised during each cold shutdown when the RCS is at a reduced pressure. Testing at a reduced RCS pressure allows the valves to seat properly and maintain RCS boundary integrity.

Testing Frequency

Exercise for operability during cold shutdown when the Reactor Coolant System is at a reduced pressure but not more frequently than once per three months.

COLD SHUTDOWN JUSTIFICATION CSV-20

System : Auxiliary Feedwater

Valve(s): 1-FW-HCV-100A
1-FW-HCV-100B
1-FW-HCV-100C

Category: B

Class : 3

Function: Standby Auxiliary Feedwater Supply Valves

Cold Shutdown Justification

Valve position is controlled by turning a knob on a potentiometer. Several turns of the knob are necessary to full stroke the valve, which would not simulate a fail safe test. Isolating instrument air and electrical power to the valve is the only valid method for performing a fail safe test and full stroke exercising these valves. The fail safe test cannot be performed during normal operation because these valves must be available in the event of a reactor trip.

Testing Frequency

These valves will be partial stroke exercised every three months and full stroke exercised every cold shutdown but not more frequently than once every three months.

COLD SHUTDOWN JUSTIFICATION CSV-21

System : Auxiliary Feedwater

Valve(s): 1-FW-PCV-159A
1-FW-PCV-159B

Category: B

Class : 3

Function: Auxiliary Feedwater Pressure Control Valves

Cold Shutdown Justification

During normal operation, these valves control auxiliary feedwater header pressure and cannot be full stroked. Isolating instrument air and electrical power to the valves is the only valid method for performing a fail safe test and full stroke exercising these valves. The fail safe test cannot be performed during normal operation because these valves must be in service.

Testing Frequency

These valves will be partial stroke exercised every three months during the turbine driven AFW pump tests and full stroke exercised every cold shutdown but not more frequently than once every three months.

COLD SHUTDOWN JUSTIFICATION CSV-22

System : Feedwater

Valve(s): 1-FW-47
1-FW-79
1-FW-111

Category: C

Class : 2

Function: Main Feedwater Supply Isolation Check Valves

Cold Shutdown Justification

These check valves must seat upon reversal of flow to fulfill their safety functions. The only method to verify this actuation is to perform a back pressure test. Since the valves must be open to sustain power operation, they cannot be tested every three months.

Testing Frequency

These check valves will be tested in the closed position every cold shutdown but not more frequently than once every three months. Normal operation of the main feedwater system verifies these valves open.

COLD SHUTDOWN JUSTIFICATION CSV-23

System : Auxiliary Feedwater

Valve(s): 1-FW-61 1-FW-127
1-FW-63 1-FW-150
1-FW-93 1-FW-167
1-FW-95 1-FW-185
1-FW-125 1-FW-279

Category: C

Class : 3

Function: Auxiliary Feedwater Header Check Valves

Cold Shutdown Justification

These valves can be back seat tested with auxiliary feedwater flow. However, the back seat test involves extended periods of auxiliary feedwater flow to the steam generators. Extended periods of relatively cold auxiliary feedwater flow to the steam generators when the plant is at power causes reactivity transients. Therefore, the back seat tests should be performed during cold shutdowns.

Testing Frequency

Valves 1-FW-93, 127 and 279 are in dedicated flow paths and are full flow tested every three months. Valves 1-FW-150, 167 and 185 are on the minimum flow recirculation lines and are full flow tested every three months. The remaining valves will be full flow tested every cold shutdown but not more frequently than once every three months. These valves will be exercised closed every cold shutdown but not more frequently than once every three months.

COLD SHUTDOWN JUSTIFICATION CSV-24

System : Auxiliary Feedwater

Valve(s): 1-FW-68
1-FW-100
1-FW-132

Category: C

Class : 2

Function: Auxiliary Feedwater Header Check Valves

Cold Shutdown Justification

The close position for these valves is the non-safety position because other boundaries upstream serve the reverse flow safety function. The valves are located near the main feedwater system header and cannot be isolated from the header. The only way to verify the closed position using flow is to perform a back seat test using main feedwater header pressure. To perform the test, pressure gauges must be installed upstream of the valves and the piping upstream must be partially drained and vented. The upstream piping is then isolated and the differential pressure across the check valve is measured and compared to an acceptance criterion. The valves will be exercised only during cold shutdowns and refueling outages because the small increase in safety gained by testing every three months does not justify the burden of setting up test equipment, draining lines and performing the back seat tests. This technical basis is consistent with the NRC position on this subject that is described in NUREG-1482, Revision 1, Section 4.1.6, entitled "Extension of Test Interval to Refueling Outage for Check Valves Verified Closed by Leak Testing."

Testing Frequency

These valves will be full stroke exercised open every three months and closed every cold shutdown but not more frequently than once every three months.

COLD SHUTDOWN JUSTIFICATION CSV-25

System : Auxiliary Feedwater

Valve(s): 1-FW-148
1-FW-165
1-FW-183

Category: C

Class : 3

Function: Auxiliary Feedwater Pump Discharge Check Valves

Cold Shutdown Justification

These valves can be back seat tested with auxiliary feedwater flow. However, the back seat test involves extended periods of auxiliary feedwater flow to the steam generators. Extended periods of relatively cold auxiliary feedwater flow to the steam generators when the plant is at power causes reactivity transients. Therefore, the back seat tests should be performed during cold shutdowns.

Testing Frequency

These valves will be full stroke exercised open every three months and closed every cold shutdown but not more frequently than once every three months.

COLD SHUTDOWN JUSTIFICATION CSV-26

System : Instrument Air

Valve(s): 1-IA-TV-102A
1-IA-TV-102B

Category: B for 1-IA-TV-102A
A for 1-IA-TV-102B

Class : 2

Function: Instrument Air Supply to Containment Isolation Valves

Cold Shutdown Justification

Testing these trip valves to the closed position interrupts the instrument air (IA) supply to containment including IA supply to the component cooling (CC) trip valves that isolate flow to the Reactor Coolant Pumps (RCPs) thermal barriers, lube oil, stator and/or shroud coolers. The IA trip valves are in series. If one of these valves failed closed, instrument air to containment may be interrupted for an extended period. In this case, the CC trip valves would be maintained open only be the compressed air system inside containment. The non-safety related compressed air system may not be able to sustain plant operation for an extended period. Therefore, to avoid challenging plant operation, the IA trip valves should only be exercised during cold shutdown when the RCPs are secured.

Testing Frequency

These valves will be full stroke exercised every cold shutdown when the RCPs are secured but not more frequently than once every three months.

COLD SHUTDOWN JUSTIFICATION CSV-27

System : CH

Valve(s): 1-CH-84
1-CH-102

Category: C

Class : 3

Function: Boric Acid Transfer Pump Discharge Check Valves

Cold Shutdown Justification

To achieve full flow through these check valves, a flow path must be established to the reactor coolant system. This test would allow the injection of boric acid into the reactor coolant system which would upset the boron concentration in the primary plant water.

Testing Frequency

These valves will be full stroke exercised open and closed every cold shutdown but not more frequently than once every three months.

4.7 VALVE TEST PROGRAM REACTOR REFUELING JUSTIFICATIONS

ISTC-3521 and ISTC-3522 allow for the full stroke exercising of valves during reactor refueling (but not more frequently than every three months) if it is not practical to exercise the valves during normal operation or cold shutdown. Therefore, no request for relief from testing every three months or every cold shutdown is necessary.

However, ISTC-9200 does require that these valves be specifically identified by the owner. The reactor refueling justifications identify and provide the technical basis for valves exercised during reactor refueling outages.

REACTOR REFUELING JUSTIFICATION RRV-1

System : Component Cooling

Valve(s): 1-CC-84
1-CC-119
1-CC-154

Category: AC

Class : 2

Function: CC Supply to Reactor Coolant Pump Containment Isolation Check Valve

Reactor Refueling Justification

These check valves must seat upon reversal of flow in order to fulfill their safety functions. The only exercise method to verify this actuation is to perform a leak rate test/back pressure test. Since the valves are located inside containment and their systems are required during power operation, they cannot be tested every three months. The valves will be exercised only during refueling outages because the small increase in safety gained by testing during cold shutdown does not justify the burden of draining lines and performing leak rate tests in a subatmospheric containment. This technical basis is consistent with the NRC position on this subject that is described in NUREG-1482, Revision 1, Section 4.1.6, entitled "Extension of Test Interval to Refueling Outage for Check Valves Verified Closed by Leak Testing."

Testing Frequency

These valves will be exercised closed each reactor refueling. The open position is verified during normal operation as component cooling water is supplied to the reactor coolant pumps.

REACTOR REFUELING JUSTIFICATION RRV-2

System : Chemical & Volume Control

Valve(s): 1-CH-322 1-CH-336 1-CH-380
1-CH-330 1-CH-358 1-CH-402

Category: AC for 1-CH-402
C for 1-CH-322, 330, 336, 358 and 380

Class : 1 for 1-CH-330, 322, 336, 358 and 380
2 for 1-CH-402

Function: Charging Supply Inside Containment Isolation Check Valves (1-CH-322, 330), RC Pump Seal Water Supply Isolation Check Valves (1-CH-336, 358 and 380), and RC Pump Seal Water Return Containment Isolation Check Valve (1-CH-402)

Reactor Refueling Justification

These check valves must seat upon reversal of flow in order to fulfill their safety functions. The only method to verify this actuation is to perform a leak rate/back pressure test. Since the valves are located inside containment (subatmospheric) and their systems are required during power operation, they cannot be tested every three months. 1-CH-322 is in the normal charging line to the RCS. These lines cannot be drained during short cold shutdowns because charging flow is often maintained. 1-CH-336, 358, and 380 are in the RCP seal water supply lines, and 1-CH-402 is in the RCP seal water return line. Seal flow is maintained during cold shutdown to reduce RCS leakage and to float the RCP seals. 1-CH-330 is the charging supply to loop fill header, inside containment isolation valve. A local back seat test inside containment is required to verify closure for valve 1-CH-330. The valves will be exercised only during refueling outages because the small increase in safety gained by testing during cold shutdown does not justify the burden of draining lines and performing leak rate tests in a subatmospheric containment.

Testing Frequency

These valves will be exercised closed each reactor refueling. Valve 1-CH-322 is in the normal charging supply line. The open position is verified during normal operation. Valve 1-CH-330 is in the charging supply line to the loop fill header. The open position is verified during RCS refill during refueling outages. Valves 1-CH-336, 358 and 380 are in the seal water supply lines to the reactor coolant pumps. The open position is verified during normal operation.

REACTOR REFUELING JUSTIFICATION RRV-3

System : Fire Protection

Valve(s): 1-FP-272

Category: AC

Class : 2

Function: Fire Protection System Supply Containment Isolation Check Valve

Reactor Refueling Justification

This check valve must seat upon reversal of flow in order to fulfill its safety function. The only method to verify this actuation is to perform a leak rate/back pressure test. Since the valve is located inside containment (subatmospheric), it cannot be tested every three months. 1-FP-272 is in the containment fire protection system. Testing this valve will render the fire protection system inoperable. It will be exercised only during refueling outages because the small increase in safety gained by testing during cold shutdown does not justify the burden of draining the lines and performing a leak rate test. This technical basis is consistent with the NRC position on this subject that is described in NUREG-1482, Revision 1, Section 4.1.6, entitled "Extension of Test Interval to Refueling Outage for Check Valves Verified Closed by Leak Testing."

Testing Frequency

This valve will be exercised open and closed each reactor refueling.

REACTOR REFUELING JUSTIFICATION RRV-4

System : Post Accident Hydrogen Removal

Valve(s): 1-HC-14
1-HC-18

Category: AC

Class : 2

Function: Hydrogen Analyzer/Recombiner Containment Isolation Check Valves

Reactor Refueling Justification

Check valves 1-HC-14 and 18 open to sample hydrogen, which is a non-safety function. These valves also provide containment isolation and must seat upon reversal of flow in order to fulfill their safety functions. The only exercise method to verify closure is to perform a leakage/back pressure test.

Since the valves are located inside containment (subatmospheric), they cannot be tested every three months. Performing a leakage/back pressure test requires installing temporary leakage test equipment. Because of the effort involved, it is impractical to perform this test during cold shutdowns. These valves will be verified closed only during refueling outages. This technical basis is consistent with the NRC position on this subject that is described in NUREG-1482, Revision 1, Section 4.1.6, entitled "Extension of Test Interval to Refueling Outage for Check Valves Verified Closed by Leak Testing."

The ASME OM Code ISTC-3522(a) states in part that, "Open and close tests need only be performed at an interval when it is practicable to perform both tests." The close test can only be performed during the reactor refueling outages. Therefore, the interval for the open test can also be on a reactor refueling outage interval as allowed by ISTC-3522(a).

Testing Frequency

Check valves 1-HC-14 and 18 will be tested open and closed every reactor refueling outage.

REACTOR REFUELING JUSTIFICATION RRV-5

System : Instrument Air

Valve(s): 1-IA-55
1-IA-149

Category: AC

Class : 2

Function: Instrument Air Supply Containment Isolation Check Valves

Reactor Refueling Justification

These check valves must seat upon reversal of flow in order to fulfill their safety functions. The only method to verify this actuation is to perform a leak rate test. Since the valves are located inside containment (subatmospheric), they cannot be tested every three months. Valve 1-IA-55 is in the instrument air supply line to containment. Testing this valve renders the instruments and components supplied by instrument air inside containment inoperable.

They will be exercised only during refueling outages because the small increase in safety gained by testing during cold shutdown does not justify the burden of performing leak rate tests. This technical basis is consistent with the NRC position on this subject that is described in NUREG-1482, Revision 1, Section 4.1.6, entitled "Extension of Test Interval to Refueling Outage for Check Valves Verified Closed by Leak Testing."

Testing Frequency

These valves will be exercised open and closed each reactor refueling.

REACTOR REFUELING JUSTIFICATION RRV-6

System : Reactor Coolant

Valve(s): 1-RC-149

Category: AC

Class : 2

Function: Primary Grade Water Supply Containment Isolation Check Valves

Reactor Refueling Justification

This check valve must seat upon reversal of flow in order to fulfill its safety function. The only method to verify this actuation is to perform a leak rate test. Since the valve is located inside containment (subatmospheric), it cannot be tested every three months. The valve will be exercised only during refueling outages because the small increase in safety gained by testing during cold shutdown does not justify the burden of draining lines and performing a leak rate test. This technical basis is consistent with the NRC position on this subject that is described in NUREG-1482, Revision 1, Section 4.1.6, entitled "Extension of Test Interval to Refueling Outage for Check Valves Verified Closed by Leak Testing."

Testing Frequency

This valve will be exercised open and closed each reactor refueling.

REACTOR REFUELING JUSTIFICATION RRV-7

System : Safety Injection

Valve(s): 1-SI-9 1-SI-26
1-SI-12 1-SI-29
1-SI-18

Category: C

Class : 2

Function: Low Head SI Pump Suction and Discharge Check Valves

Reactor Refueling Justification

Check valve 1-SI-18 is on the suction line from the RWST to the LHSI pumps, check valves 1-SI-9 and 26 are on the discharge lines from the LHSI pumps and check valves 1-SI-12 and 29 are on the recirculation lines from the LHSI pumps. Valves 1-SI-9 and 26 cannot be full or partial stroked exercised during power operation because the LHSI pumps cannot overcome reactor coolant system pressure. During cold shutdown, the filled reactor coolant system still prevents full flow testing of the check valves. Valve 1-SI-18 can be partial stroke exercised during power operation but can only be full stroke exercised when LHSI flow can be established to the reactor coolant system. Therefore, these valves will be full flow tested every reactor refueling to verify the full open position.

To verify closure of valves 1-SI-9, 12, 26 and 29, the low head safety injection system must be isolated which can only be done at reactor refueling. By isolating the system, the test boundary is established to demonstrate adequate seat tightness for the discharge valves (1-SI-9 and 26) and discharge recirculation line valves (1-SI-12 and 29) to the non-running pump.

The configuration of the suction piping makes back seat testing valve 1-SI-18 difficult. This valve will be disassembled and inspected every reactor refueling to verify the closed position.

Testing Frequency

Valves 1-SI-12 and 29 will be full flow tested every three months. Valves 1-SI-9, 18 and 26 will be full flow tested every reactor refueling. Valves 1-SI-9, 12, 18, 26 and 29 will be exercised to the closed position every reactor refueling.

REACTOR REFUELING JUSTIFICATION RRV-8

System : Safety Injection

Valve(s): 1-SI-47

Category: AC

Class : 2

Function: RWST Supply to Charging Pump Suction Header Check Valves

Reactor Refueling Justification

Exercising this valve during power operation would require charging pump suctions be aligned with the Refueling Water Storage Tank. This alignment would cause a sudden increase in Reactor Coolant System boron inventory. Full flow for the charging system can only be established during reactor refueling when the RCS is depressurized.

To verify valve closure, the refueling water storage tank must be isolated which requires the plant to enter a one hour LCO per Technical Specification 3.5.4.B.

The only method to verify closure other than disassembly and inspection is to perform a leak rate/back pressure test. This valve is also subject to leak testing, which is performed every reactor refueling. Verification of closure will be performed during the leak test every reactor refueling instead of every cold shutdown because the small increase in safety gained by testing during cold shutdown does not justify the burden of draining the lines and performing a leak rate test. This technical basis is consistent with the NRC position on this subject that is described in NUREG-1482, Revision 1, Section 4.1.6, entitled "Extension of Test Interval to Refueling Outage for Check Valves Verified Closed by Leak Testing."

Testing Frequency

Exercise to the full open and closed positions every reactor refueling.

REACTOR REFUELING JUSTIFICATION RRV-9

System : Safety Injection

Valve(s): 1-SI-106
1-SI-110

Category: AC

Class : 2

Function: Nitrogen and Makeup Supply to Accumulators Containment Isolation Check Valves

Reactor Refueling Justification

These check valves must seat upon reversal of flow in order to fulfill their safety functions. The only method to verify closure is to perform a leak rate/back pressure test. Since the valves are located inside containment (subatmospheric), they cannot be tested every three months. These valves will be exercised only during refueling outages because the small increase in safety gained by testing during cold shutdown does not justify the burden of performing a leak rate test. This technical basis is consistent with the NRC position on this subject that is described in NUREG-1482, Revision 1, Section 4.1.6, entitled "Extension of Test Interval to Refueling Outage for Check Valves Verified Closed by Leak Testing."

Testing Frequency

These valves will be exercised open and closed each reactor refueling.

REACTOR REFUELING JUSTIFICATION RRV-10

System : Safety Injection

Valve(s): 1-SI-83 1-SI-195
1-SI-86 1-SI-197
1-SI-89 1-SI-199

Category: AC

Class : 1

Function: RCS Cold Leg SI to RCS Loops Check Valves

Reactor Refueling Justification

These Safety Injection check valves must open and close to fulfill their safety functions. They cannot be full or part-stroke exercised to the open position during power operation because this would thermally shock the injection system and cause unnecessary plant transients. Flow cannot be established in the low head injection lines during normal plant operation.

During cold shutdown, the filled Reactor Coolant System still prevents full design flow. Also, an exercise test could cause an over pressurization of the Reactor Coolant System and force a safety system to function.

These valves can only be tested to the closed position by draining the lines and performing a back seat leak test. They are identified as pressure isolation valves in Technical Specification Table B 3.4.14-1 and as such are leakage tested every reactor refueling outage.

For testing to the open position, these valves will be non-intrusively monitored using a sampling plan every reactor refueling as described below.

Testing Frequency

Testing to the Open Direction

With low head pump flow, the cold leg injection valves will be acoustically monitored using a sampling plan for the disk striking the back seat every reactor refueling. The data will be analyzed to show that the disk struck the back seat, which verifies that the disk stroked to the full open position.

The sampling plan will follow the guidance described in NUREG-1482, Revision 0, Section 4.1.2. Per this plan, the valves will be placed into two groups with valves 1-SI-83, 86 and 89 in one group, and valves 1-SI-195, 197 and 199 in the other group. During initial testing using non-intrusive techniques, each valve in the group will be verified as operable.

During subsequent testing, non-intrusive verification will be performed for only one valve of the group on a rotating schedule each time the testing is performed, and the balance of the group will be flow tested. In this context, flow testing means that flow will be established in the lines but not measured. Indirect means can be used to verify that flow is established. If problems are found with the sample valve that are determined to affect the operational readiness of the valve, all valves in the group must be tested using non-intrusive techniques during the same outage. The test frequency is the same as described in ISTC-5221(c).

According to NUREG-1482, Revision 0, Section 4.1.2, the NRC staff determined that non-intrusive techniques meet the Code requirements for verifying disk movement for full stroke exercising – opening and closing – of check valves. The non-intrusive reverification allows flow testing at repeatable conditions to be performed on all valves in a group while requiring non-intrusive tests of only one of the group on a rotating basis.

This discussion of the sampling scheme was omitted from NUREG-1482, Section 4.1.2, Revision 1. However, the conclusion in NUREG-1482, Revision 0, that flow testing of all the valves in the group at repeatable conditions while monitoring one valve on a rotating basis meets the requirements of the Code, is still valid because the technical basis for the sampling plan meeting Code requirements has not changed.

Testing to the Closed Direction

These valves will be confirmed closed every reactor refueling.

REACTOR REFUELING JUSTIFICATION RRV-11

System : Safety Injection

Valve(s): 1-SI-125 1-SI-144
1-SI-127 1-SI-159
1-SI-142 1-SI-161

Category: C

Class : 1

Function: SI Accumulator Discharge Check Valves

Reactor Refueling Justification

These valves cannot be flow tested during normal operation because the accumulator pressure (600 to 650 psig) is below Reactor Coolant System pressure and the injection of borated water would upset the reactor coolant chemistry.

During cold shutdown, the RCS pressure may still prevent full flow testing. Also, discharging the accumulators would challenge the Low Temperature Overpressure Protection System.

The accumulators must be isolated to verify closure using back flow. The small increase in safety gained by performing the back seat check valve tests every cold shutdown versus every reactor refueling does not justify the added burden of the increased test frequency.

There is no installed instrumentation that can measure individual flow rates for these valves. For testing to the open position, these valves will be non-intrusively monitored using a sampling plan every reactor refueling as described below.

Testing Frequency

Testing to the Open Direction

With flow from each accumulator, these check valves will be acoustically monitored using a sampling plan for the disk striking the back seat every reactor refueling. The data will be analyzed to show that the disk struck the back seat, which verifies that the disk stroked to the full open position.

The sampling plan will follow the guidance described in NUREG-1482, Revision 0, Section 4.1.2. Valves 1-SI-127, 144 and 161 are closest to the reactor coolant system and will be in one group, and valves 1-SI-125, 142 and 159 will be in the other group. During initial testing using non-intrusive techniques, each valve in the group will be verified as operable.

During subsequent testing, non-intrusive verification will be performed for only one valve of the group on a rotating schedule each time the testing is performed, and the balance of the group will be flow tested. In this context, flow testing means that flow will be established in the lines but not measured. Indirect means can be used to verify that flow is established. If problems are found with the sample valve that are determined to affect the operational readiness of the valve, all valves in the group must be tested using non-intrusive techniques during the same outage. The test frequency is the same as described in ISTC-5221(c).

According to NUREG-1482, Revision 0, Section 4.1.2, the NRC staff determined that non-intrusive techniques meet the Code requirements for verifying disk movement for full stroke exercising – opening and closing – of check valves. The non-intrusive reverification allows flow testing at repeatable conditions to be performed on all valves in a group while requiring non-intrusive tests of only one of the group on a rotating basis.

This discussion of the sampling scheme was omitted from NUREG-1482, Section 4.1.2, Revision 1. However, the conclusion in NUREG-1482, Revision 0, that flow testing of all the valves in the group at repeatable conditions while monitoring one valve on a rotating basis meets the requirements of the Code, is still valid because the technical basis for the sampling plan meeting Code requirements has not changed.

Testing to the Closed Direction

These valves will be confirmed closed every reactor refueling.

REACTOR REFUELING JUSTIFICATION RRV-12

System : Safety Injection

Valve(s):		
1-SI-79	1-SI-185	1-SI-211
1-SI-90	1-SI-201	1-SI-213
1-SI-95	1-SI-206	
1-SI-99	1-SI-207	
1-SI-103	1-SI-209	

Category: C

Class : 1

Function: High Head SI to RCS Cold Legs Check Valves (1-SI-79 and 185), High Head SI to RCS Hot Legs Check Valves (1-SI-90 and 201), SI to RCS Hot Legs Check Valves (1-SI-95, 99 and 103), Low Head to RCS Hot Legs Check Valves (1-SI-206, 207, 209, 211 and 213)

Reactor Refueling Justification

These Safety Injection check valves must open and close to fulfill their safety functions. They cannot be exercised to the open position during power operation because this would cause safety injection flow into the Reactor Coolant System which would thermally shock the injection system and cause unnecessary plant transients. Flow cannot be established in the low head injection lines during normal plant operation.

During cold shutdown, the Reactor Coolant System pressure still prevents full design flow. Also, a stroke test could cause an over pressurization of the Reactor Coolant System and force a safety system to function.

These valves can only be tested to the closed position by a back seat leak test, which requires draining the lines.

For testing to the open position, the hot leg injection valves 1-SI-95, 99, 103, 209, 211 and 213 will be non-intrusively monitored using a sampling plan every reactor refueling as described below. The remaining check valves can be full flow tested using installed instrumentation.

Testing Frequency

Valves 1-SI-95, 99, 103, 209, 211 and 213 will be exercised to the open position using non-intrusive techniques every reactor refueling. With low head pump flow, the hot leg injection valves will be acoustically monitored using a sampling plan for the disk striking the back seat every reactor refueling. The data will be analyzed to show that the disk struck the back seat, which verifies that the disk stroked to the full open position.

The sampling plan will follow the guidance described in NUREG-1482, Revision 0, Section 4.1.2. Per this plan, the valves will be placed into two groups with valves 1-SI-95, 99 and 103 in one group, and valves 1-SI-209, 211 and 213 in the other group. During initial testing using non-intrusive techniques, each valve in the group will be verified as operable.

During subsequent testing, non-intrusive verification will be performed for only one valve of the group on a rotating schedule each time the testing is performed, and the balance of the group will be flow tested. In this context, flow testing means that flow will be established in the lines but not measured. Indirect means can be used to verify that flow is established. If problems are found with the sample valve that are determined to affect the operational readiness of the valve, all valves in the group must be tested using non-intrusive techniques during the same outage. The test frequency is the same as described in ISTC-5221(c).

According to NUREG-1482, Revision 0, Section 4.1.2, the NRC staff determined that non-intrusive techniques meet the Code requirements for verifying disk movement for full stroke exercising – opening and closing – of check valves. The non-intrusive reverification allows flow testing at repeatable conditions to be performed on all valves in a group while requiring non-intrusive tests of only one of the group on a rotating basis.

This discussion of the sampling scheme was omitted from NUREG-1482, Section 4.1.2, Revision 1. However, the conclusion in NUREG-1482, Revision 0, that flow testing of all the valves in the group at repeatable conditions while monitoring one valve on a rotating basis meets the requirements of the Code, is still valid because the technical basis for the sampling plan meeting Code requirements has not changed.

Valves 1-SI-79, 90, 185, 201, 206 and 207 will be exercised to the open position using flow every reactor refueling.

Testing to the Closed Direction

These valves will be confirmed closed every reactor refueling.

REACTOR REFUELING JUSTIFICATION RRV-13

System : Safety Injection

Valve(s): 1-SI-190
1-SI-192
1-SI-194

Category: C

Class : 1

Function: High Head SI to RCS Cold Legs Check Valves

Reactor Refueling Justification

These Safety Injection check valves must open and close to fulfill their safety functions. They cannot be exercised to the open position during power operation because this would thermally shock the injection system and cause unnecessary plant transients.

During cold shutdown, the filled Reactor Coolant System still prevents full design flow. Also, a stroke test could cause an over pressurization of the Reactor Coolant System and force a safety system to function.

The only test methods which will individually back seat these valves are to perform leak tests or to use downstream pressure provided by the low head safety injection pump tests. Either test can only be performed during reactor refueling.

Testing Frequency

Exercise to the open position using flow and to the closed position every reactor refueling.

REACTOR REFUELING JUSTIFICATION RRV-14

System : Service Water

Valve(s): 1-SW-114 1-SW-140
1-SW-116 1-SW-150
1-SW-120
1-SW-130

Category: C

Class : 2 for 1-SW-120, 130, 140, 150
3 for 1-SW-114, 116

Function: Recirculation Spray Heat Exchanger Service Water Supply Check Valves

Reactor Refueling Justification

Exercising these valves would flow service water into the recirculation spray heat exchangers. Per FSAR Section 6.2.2.2.5, in order to ensure long term reliability of the heat exchangers, following each periodic test the heat exchangers are drained, purged with air and maintained in dry lay up. The logistics of this procedure make testing every three months or at cold shutdown impractical considering the small increase in system safety gained from exercising the valves.

Testing Frequency

These valves will be exercised open and closed each reactor refueling.

REACTOR REFUELING JUSTIFICATION RRV-15

System : Vacuum Priming

Valve(s): 1-VP-12

Category: AC

Class : 2

Function: Condenser Air Removal Discharge Containment Isolation Check Valve

Reactor Refueling Justification

This check valve must seat upon reversal of flow in order to fulfill its safety function. The only method to verify this actuation is to perform a leak rate test. Since the valve is located inside containment (subatmospheric), it cannot be tested every three months. The valve will be exercised during refueling outages because the small increase in safety gained by testing during cold shutdown does not justify performing a leak rate test. This technical basis is consistent with the NRC position on this subject that is described in NUREG-1482, Revision 1, Section 4.1.6, entitled "Extension of Test Interval to Refueling Outage for Check Valves Verified Closed by Leak Testing."

Testing Frequency

This valve will be exercised open and closed each reactor refueling.

REACTOR REFUELING JUSTIFICATION RRV-16

System : CH

Valve(s): 1-CH-254
1-CH-267
1-CH-279

Category: C

Class : 2

Function: Charging Pump Discharge Check Valves

Reactor Refueling Justification

The only available flow path to test these valves to the full open position is into the reactor coolant system. During cold shutdown, exercising these valves could result in over pressurization of the reactor coolant system and could force a safety system to function.

Testing Frequency

Exercise closed every three months and full open every reactor refueling.

REACTOR REFUELING JUSTIFICATION RRV-17

System : SI

Valve(s): 1-SI-4
1-SI-21

Category: AC

Class : 2

Function: Low Head SI Pump Seal Water Supply Check Valves

Reactor Refueling Justification

Due to the plant configuration, these valves cannot be verified closed using system flow. The only method to verify closure other than disassembly and inspection is to perform a back pressure test using a primary grade water supply as the pressure source. To perform the back pressure test on these 3/4" check valves, each LHSI pump must be removed from service for approximately two hours. With one ECCS train out of service, the plant must enter an action statement per Technical Specification LCO 3.5.2 and proceed to hot shutdown within 72 hours.

Including the preparation for the test which consists of connecting primary grade water to the test volume using supply hoses, the entire test for each valve takes several hours to perform. Also, the seal water line, which may contain contaminated water, must be drained and vented. Considering that one train of ECCS must be removed from service for an extended period of time which degrades the safety of the plant, and the difficulty in performing the back pressure test, testing these 3/4" check valves to the closed position every three months is not practical.

These valves are also subject to leak testing, which is performed every reactor refueling. A leak test provides more information concerning the condition of the valve seats then just a back pressure test. When compared to the Code requirements for a back seat test performed every cold shutdown, the performance of a leak test every refueling outage is an alternative that provides an acceptable level of quality and safety. This technical basis is consistent with the NRC position on this subject that is described in NUREG-1482, Revision 1, Section 4.1.6, entitled "Extension of Test Interval to Refueling Outage for Check Valves Verified Closed by Leak Testing." The open position is verified using flow every reactor refueling.

Testing Frequency

Exercise to the closed and open positions every reactor refueling.

REACTOR REFUELING JUSTIFICATION RRV-18

System : Component Cooling

Valve(s): 1-CC-546
1-CC-559
1-CC-572

Category: AC

Class : 2

Function: CC Water Supply to Containment Recirculation Air Coolers Containment Isolation Check Valves

Reactor Refueling Justification

These check valves must seat upon reversal of flow in order to fulfill their safety functions. The only exercise method to verify this actuation is to perform a leak rate test/back pressure test which would involve isolating the containment air cooling coils. The containment recirculation air cooling coils are required for normal operation to maintain containment temperature below the limit specified in Technical Specification LCO 3.6.5. Removing a cooler from service to perform the leak rate test/back pressure test may result in an increased containment temperature that could challenge the containment temperature limit. There is typically less margin to the temperature limit during the summer months. Therefore, these valves should not be tested every three months.

These valves are also subject to leak testing, which is performed every reactor refueling. A leak test provides more information concerning the condition of the valve seats then just a back pressure test. When compared to the Code requirements for a back seat test performed every cold shutdown, the performance of a leak test every refueling outage is an alternative that provides an acceptable level of quality and safety. This technical basis is consistent with the NRC position on this subject that is described in NUREG-1482, Revision 1, Section 4.1.6, entitled "Extension of Test Interval to Refueling Outage for Check Valves Verified Closed by Leak Testing."

Testing Frequency

Exercise to the closed position every reactor refueling. The open position is verified during normal system operation as cooling water is supplied to the containment recirculation coolers.

REACTOR REFUELING JUSTIFICATION RRV-19

System : Component Cooling

Valve(s): 1-CC-111
1-CC-146
1-CC-181

Category: C

Class : 3

Function: CC Supply to RC Pump Thermal Barrier Cooler Isolation Check Valves

Reactor Refueling Justification

These check valves must be locally back pressure tested to verify closure. Since the valves are located inside containment (subatmospheric), they cannot be back pressure tested during normal operation. The valves will be tested every refueling outage because the small increase in safety gained by testing during cold shutdown does not justify the burden of performing a back pressure test.

Testing Frequency

Exercise to the closed position every reactor refueling. The open position is verified during normal system operation as cooling water is supplied to the RC pump thermal barrier coolers.

REACTOR REFUELING JUSTIFICATION RRV-20

System : Recirculation Spray

Valve(s): 1-QS-11 1-RS-18
1-QS-19 1-RS-27

Category: AC for 1-QS-11 and 19
C for 1-RS-18 and 27

Class : 2

Function: Quench Spray and Outside Recirculation Spray Containment Isolation Check Valves

Reactor Refueling Justification

These valves must seat to maintain containment integrity and open to allow flow to the containment spray headers. Flow testing these valves would introduce water to the spray arrays and saturate containment. These valves can be mechanically exercised to the open and closed positions. However, the valves are located inside containment (subatmospheric) and require the construction of scaffolding before they can be exercised. The small increase in safety gained by exercising the valves during cold shutdown does not justify the burden of constructing the scaffolding.

Testing Frequency

These valves will be exercised to the open and closed positions every reactor refueling.

REACTOR REFUELING JUSTIFICATION RRV-21

System : Component Cooling

Valve(s): 1-CC-193
1-CC-198

Category: AC

Class : 2

Function: CC Water Supply to the RHR Heat Exchangers Containment Isolation Check Valves

Reactor Refueling Justification

Valves 1-CC-193 and 1-CC-198 are check valves in the component cooling lines to the RHR heat exchangers and must close for isolation and open to allow CC cooling flow. The valves can only be exercised open when RHR is in service during shutdown conditions. The only exercise method to verify closure is to perform a leak rate test/back pressure test. These lines cannot be drained for back seat testing because the RHR system is needed during cold shutdown to control the RCS temperature.

The full flow open test will be performed at the same frequency as the close test (every refueling outage) as allowed by ISTC-3522(a) which states in part, "Each check valve exercise test shall include open and close tests. Open and close tests need only be performed at an interval when it is practicable to perform both tests."

Testing Frequency

Exercise for closure and full open every reactor refueling.

REACTOR REFUELING JUSTIFICATION RRV-22

System : Chemical & Volume Control System

Valve(s): 1-CH-215
1-CH-649

Category: AC

Class : 2

Function: Charging Pump Supply from the VCT (1-CH-215) and Charging Pump Recirculation and Seal Water Return (1-CH-649) Containment Isolation Check Valves

Reactor Refueling Justification

Due to the plant configuration, these valves cannot be verified closed using flow. The only method to verify closure other than disassembly and inspection is to perform a leak rate/back pressure test on each valve.

During normal operation, these valves cannot be isolated to perform a back pressure test because normal letdown and charging flow, and reactor coolant pump seal flow would be interrupted. Also, if the valves were isolated during normal operation, the charging pumps would have to be secured.

These valves are also subject to leak testing, which is performed every reactor refueling. A leak test provides more information concerning the condition of the valve seats then just a back pressure test. When compared to the Code requirements for a back seat test performed every cold shutdown, the performance of a leak test every refueling outage is an alternative that provides an acceptable level of quality and safety. This technical basis is consistent with the NRC position on this subject that is described in NUREG-1482, Revision 1, Section 4.1.6, entitled "Extension of Test Interval to Refueling Outage for Check Valves Verified Closed by Leak Testing."

Testing Frequency

These valves will be exercised closed every reactor refueling. Valve 1-CH-215 will be exercised full open every three months and valve 1-CH-649 will be exercised full open every reactor refueling.

REACTOR REFUELING JUSTIFICATION RRV-23

System : Safety Injection

Valve(s): 1-SI-MOV-1867A
1-SI-MOV-1867B
1-SI-66

Category: B (1-SI-MOV-1867A and B)
C (1-SI-66)

Class : 2

Function: Boron Injection Tank Inlet Isolation valves (1-SI-MOV-1867A and B) and Boric Acid Recirculation Line Check Valve (1-SI-66)

Reactor Refueling Justification

During normal operation, the boron injection tank (BIT) is isolated from the charging system and the reactor coolant system by the inlet isolation valves 1-SI-MOV-1867A and B and the outlet isolation valves 1-SI-MOV-1867C and D. These valves open upon safety injection initiation. As shown in Figure RRV-23, the inlet valves are located on parallel paths. The normal operating pressure just upstream of the isolation valves is between 2600 and 2650 psig which is the discharge pressure of the charging pumps. The downstream pressure is approximately 40 psig. The reason for this low pressure is that the BIT boric acid solution is constantly circulated by the relatively low pressure boric acid transfer pumps.

Tests have revealed that when either 1-SI-MOV-1867A or B is opened using the normal valve actuator, the BIT and the associated piping experience a significant hydraulic transient. This hydraulic transient also perturbs the reactor coolant pumps (RCPs) seal injection flow because the RCP seal flow comes off the same header as the BIT flow. When the BIT inlet isolation valve is opened, flow to the RCP seals decreases until the BIT volume becomes pressurized. While this is happening the charging pump discharge header flow increases because of the newly opened flow path to the BIT. Once the BIT volume is pressurized, the increased charging pump discharge header flow is diverted to the RCP seal injection paths which momentarily causes a high flow condition in the RCP seals. During one test, the reactor coolant system controlled leakage limit of 30 gpm (Technical Specification LCO 3.5.5) for total seal injection flow was exceeded.

In the past, the BIT volume was pressurized slowly by manually cracking one of the inlet isolation valves, thus avoiding the hydraulic transient described above. However, this practice has been discontinued because it could be construed as preconditioning in light of IN 97-16, "PRECONDITIONING OF PLANT STRUCTURES, SYSTEMS, AND COMPONENTS BEFORE ASME CODE INSERVICE TESTING OR TECHNICAL SPECIFICATION SURVEILLANCE TESTING." Preconditioning a valve can invalidate its ASME test.

During cold shutdowns the charging system is still in use. Therefore, a high differential pressure exists across the BIT inlet isolation valves even during cold shutdowns. The hydraulic transient caused by opening the BIT inlet isolation valve with a high differential pressure across the valves places stress on the BIT and the associated piping. Also, the oscillating RCP seal injection flow may have a degrading effect on the RCP seals when the RCPs are operating. To eliminate these concerns, the exercise tests will be performed during reactor refueling when the charging system is not operating.

In the past, the BIT recirculation line isolation check valve 1-SI-66 was back seat tested using charging system pressure to create a pressure differential across the valve disk. Leakage was collected at a point upstream of the check valve. This test was performed after the inlet isolation valves are opened. The hydraulic transient described above was avoided by disabling one of the inlet isolation valves and manually cracking the valve open so as to slowly pressurized the BIT. However, this method of testing disables the BIT inlet valves and presents the potential for causing a hydraulic transient if the inlet valve is opened too quickly. The preferred method for back seat testing the check valve is during reactor refuelings when the charging system is secured and a local back seat/leak test can be performed. According to NUREG-1482, Revision 1, Section 4.1.6, "The NRC staff has determined that the need to set up test equipment constitutes adequate justification to defer reverse flow testing of a check valve to a refueling outage."

Testing Frequency

The BIT inlet isolation valves will be full stroke exercised and the BIT recirculation line check valve 1-SI-66 will be tested closed every reactor refueling. The check valve is verified open during normal operation because the contents of the BIT are continuously recirculated with the boric acid storage tank on service using the boric acid transfer pump.

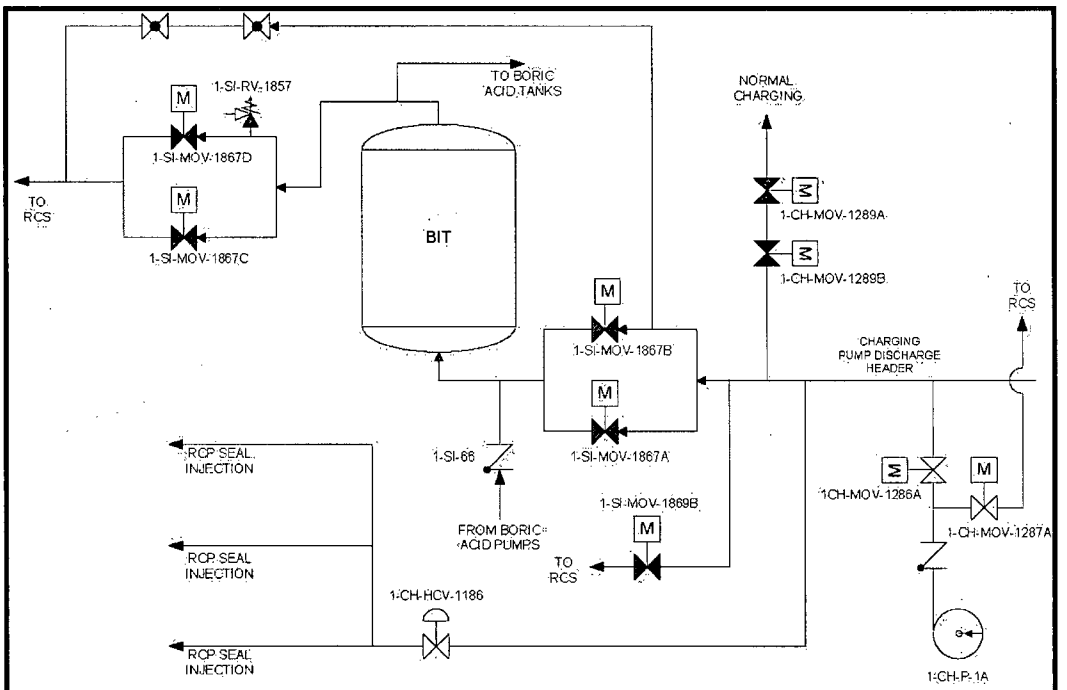

FIGURE RRV-23

REACTOR REFUELING JUSTIFICATION RRV-24

System : Service Water

Valve(s): 1-SW-MOV-101A 1-SW-MOV-105A
1-SW-MOV-101B 1-SW-MOV-105B
1-SW-MOV-101C 1-SW-MOV-105C
1-SW-MOV-101D 1-SW-MOV-105D

Category: B

Class : 3

Function: Recirculation Spray Heat Exchanger Service Water Supply and Discharge Isolation Valves

Reactor Refueling Justification

During normal operation, the lines between the Service Water supply and return header motor operated isolation valves given above and the recirculation heat exchanger isolation valves are maintained dry to ensure that no service water enters the heat exchangers. Due to a low fouling design margin, the recirculation spray heat exchangers must be maintained dry. Full or partially stroking the header motor operated isolation valves introduces service water into the lines up to the recirculation spray heat exchanger isolation valves, which could leak by and introduce water to the heat exchangers.

Whenever service water floods the piping between the header isolation valves and the recirculation spray heat exchanger isolation valves, station procedure requires that the piping be drained. To ensure that there is no leakage past the recirculation spray heat exchanger isolation valves and into the heat exchangers, station procedure also requires a containment entry to drain each heat exchanger. Because the North Anna containment is maintained slightly subatmospheric, having to enter containment makes exercising the motor operated isolation valves to the open position impracticable during normal operation or during cold shutdown when containment is under vacuum.

Testing Frequency

Exercise to the open position every reactor refueling.

REACTOR REFUELING JUSTIFICATION RRV-25

System : Recirculation Spray

Valve(s): 1-RS-123
1-RS-138

Category: C

Class : 2

Function: Casing Cooling Pump Discharge Check Valves

Reactor Refueling Justification

These check valves must open in order to perform their safety functions. Due to system design, they are not in the Casing Cooling Pump test flow path. Exercising these valves with flow would flood the containment sump.

Testing Frequency

These valves will be grouped together and one valve from this group will be disassembled and inspected every reactor refueling. A different valve will be disassembled every reactor refueling. This test frequency is in accordance with ISTC-5221(c).

REACTOR REFUELING JUSTIFICATION RRV-26

System : Safety Injection

Valve(s): 1-SI-1
1-SI-16

Category: C

Class : 2

Function: Low Head SI Pump Suction from Containment Sump Check Valves.

Reactor Refueling Justification

To partial or full flow test these check valves requires taking suction from the reactor containment sump which is normally empty. Water would have to be added to the sump. However, the water would pick up contaminants from the sump. This untreated water should not be introduced into the system.

Testing Frequency

These valves will be grouped together and one valve from this group will be disassembled and inspected every reactor refueling. A different valve will be disassembled every reactor refueling. This test frequency is in accordance with ISTC-5221(c).

REACTOR REFUELING JUSTIFICATION RRV-27

System : Service Air

Valve(s): 1-GN-225 1-IA-2152
1-GN-229 1-IA-2153
1-IA-2154
1-IA-2155

Category: AC

Class : NC

Function: Bottled Air System Supply to PORV Isolation Check Valves

Reactor Refueling Justification

Due to the plant configuration, these valves cannot be verified closed using flow.

The only method to verify closure other than disassembly and inspection is to perform a local leak rate/back pressure test. To perform the leak rate/back pressure test, the normal instrument air and nitrogen supplies to the PORVs must be isolated. The PORVs are required to be operable during normal operation. Also, these valves are located inside containment (subatmospheric) making it impractical to perform the test during normal operation.

These valves are also subject to leak testing, which is performed every reactor refueling. Verification of closure will be performed during the leak test every reactor refueling instead of every cold shutdown because the small increase in safety gained by testing during cold shutdown does not justify the burden of performing a back pressure test. This technical basis is consistent with the NRC position on this subject that is described in NUREG-1482, Revision 1, Section 4.1.6, entitled "Extension of Test Interval to Refueling Outage for Check Valves Verified Closed by Leak Testing."

Testing Frequency

Exercise to the closed and open positions every reactor refueling.

REACTOR REFUELING JUSTIFICATION RRV-28

System : Service Air

Valve(s): 1-IA-2429

Category: A

Class : NC

Function: Bottled Air Supply to Safeguards Exhaust Vent Relief Damper Isolation Valve

Reactor Refueling Justification

This non-Code check valve closes in the event of a loss of pressure in the respective instrument air supply header to prevent blow down of the air reserve volume tank which supplies the Unit 1 safeguards exhaust vent relief damper. Testing the check valve to the closed position requires that the instrument air supply be isolated to the Unit 1 and Unit 2 safeguards exhaust vent relief dampers, the Unit 2 containment personnel hatch, the Unit 1 ventilation vent multi-sampler particulate radiation monitor, 1-VG-RM-105, the Unit 1 multi-sampler off-line radio gas radiation monitor, 1-VG-RM-106, and the Unit 2 containment atmosphere particulate and gaseous radioactivity monitors, 2-RM-RMS-259 and 2-RM-RMS-260.

Disabling the containment atmosphere monitors, 2-RM-RMS-259 and 260, enters Unit 2 into an action statement per Technical Specification LCO 3.4.15 and violates Technical Requirements Manual TR 3.9.5. TR 3.9.5 applies only to Mode 6 and does not affect quarterly testing. LCO 3.4.15 applies to Modes 1, 2, 3 and 4 and requires that a RCS leak rate calculation be performed at least once per 24 hours until the monitors are restored to service.

In addition to entering an action statement per the LCO, isolating the instrument air supply to these systems every three months to perform the back pressure test would be disruptive to normal plant operation. Also, disabling four radiation monitors reduces the ability of the operator to observe and possibly respond to changing plant conditions. Therefore, this valve should not be closure tested every three months.

The check valve is also subject to leak testing at least once every 24 months. The check valve will be closure tested at least once every 24 months during the leak test because the small increase in safety gained by performing the back pressure test every cold shutdown does not justify any disruption of normal operating activities of the

opposite unit or the added burden of performing the back pressure test on the more frequent schedule.

Testing Frequency

Exercise the valve to the open and closed positions at least once every 24 months.

REACTOR REFUELING JUSTIFICATION RRV-29

System : Service Air

Valve(s): 1-IA-2584
1-IA-2585

Category: A

Class : NC

Function: Bottled Air Supply to Auxiliary Building Central Area Exhaust Vent Relief Damper Isolation Valve

Reactor Refueling Justification

These non-Code check valves close in the event of a loss of pressure in the respective instrument air supply header to prevent blow down of the air reserve volume tank which supplies the Unit 1 safeguards exhaust vent relief damper. The air reserve volume tanks are refilled following the back seat/leak tests on the check valves that are performed at least once every 24 months. Refilling the tanks demonstrates that the check valves open. Therefore, the open and close tests will be performed at least once every 24 months.

Testing Frequency

Exercise the valve to the open and closed positions at least once every 24 months.

REACTOR REFUELING JUSTIFICATION RRV-30

System : Control Room Chilled Water System

Valve(s): 1-CD-161
1-CD-182
1-CD-209

Category: C

Class : 3

Function: Control Room Chilled Water System Pump Discharge Check Valves

Reactor Refueling Justification

Due to the plant configuration, these valves cannot be verified closed using flow. The downstream isolation motor operated valves (1-HV-MOV-111A, B and C) are interlocked with the associated upstream chilled water pumps (1-HV-P-20A, B and C). When the MOV is stroked open to allow a flow path to the check valve, the upstream pump starts. Therefore, the check valves cannot be tested closed using the discharge from another pump without disabling the interlock circuitry of the downstream MOV. Another way to perform a back pressure test is to isolate the upstream and downstream piping, vent and drain the upstream piping and use an external water source to pressurize the downstream piping. There is no external source of water such as a primary grade water supply or a domestic water supply that is available. Domestic water is hard piped to the chilled water system expansion tanks, but this source is not available for other use without a temporary modification to the piping system.

Another method to verify valve closure is disassembly and examination as allowed by ISTC-5221(c).

Testing Frequency

These valves will be grouped together and one valve from this group will be disassembled and inspected every reactor refueling. A different valve will be disassembled every reactor refueling. This test frequency is in accordance with ISTC-5221(c).

REACTOR REFUELING JUSTIFICATION RRV-31

System : Chemical & Volume Control System

Valve(s): 1-CH-238
1-CH-240
1-CH-242

Category: C

Class : 2 for 1-CH-238 and 242
3 for 1-CH-240

Function: Emergency Boration Line and Alternate Boration Line Check Valves

Reactor Refueling Justification

With the current piping configuration, the check valves cannot be back seat tested with flow. Valves 1-CH-238 and 242 have bonnets that are seal welded and the seal weld must be cut before the valve can be disassembled. For this reason, disassembly is not the preferred method to verify the close position for valves 1-CH-238 and 242. The valves will be radiographed to verify that the disks are on the seat. This examination requires that test equipment be setup in the field and the area cleared to protect personnel from exposure to the radioactive source. Therefore, performing the examination every three months or every cold shutdown is impractical.

Valve 1-CH-240 has a bolted bonnet that is not seal welded. Therefore, the valve will be disassembled and examined as allowed by ISTC-5221(c).

Testing Frequency

According to ISTC-5221(c)(1),

> "Grouping of check valves for the sample disassembly examination program shall be technically justified and shall consider, as a minimum, valve manufacturer, design, service, size, materials of construction, and orientation."

Based on these guidelines check valves 1-CH-238 and 242 will be grouped. To verify the close position, one valve will be radiographed each refueling outage on a rotating basis. This sampling plan is consistent with the guidance described in NUREG-1482, Revision 0, Section 4.1.2 for using non-intrusive testing techniques with a sampling plan. As allowed by ISTC-3522(a), these check valves will be full stroked exercised on the same test interval as the close test, which is every reactor refueling.

According to NUREG-1482, Revision 0, Section 4.1.2, the NRC staff determined that non-intrusive techniques meet the Code requirements for verifying disk movement for full stroke exercising – opening and closing – of check valves. The non-intrusive reverification allows flow testing at repeatable conditions to be performed on all valves in a group while requiring non-intrusive tests of only one of the group on a rotating basis.

This discussion of the sampling scheme was omitted from NUREG-1482, Section 4.1.2, Revision 1. However, the conclusion in NUREG-1482, Revision 0, that flow testing of all the valves in the group at repeatable conditions while monitoring one valve on a rotating basis meets the requirements of the Code, is still valid because the technical basis for the sampling plan meeting Code requirements has not changed.

Valve 1-CH-240 will be disassembled and examined every refueling outage in accordance with ISTC-5221(c).

Valves 1-CH-238, 240 and 242 will be exercised to the full open position every reactor refueling.

REACTOR REFUELING JUSTIFICATION RRV-32

System : Emergency Diesel System

Valve(s): 1-EB-15
1-EB-34
1-EB-65
1-EB-84

Category: C

Class : NC

Function: Emergency Diesel Air Receiver Tank Discharge Check Valves

Reactor Refueling Justification

The system configuration does not allow for back seat testing with flow. These valves will be disassembled and inspected on a reactor refueling test frequency (nominally every 18 months but not to exceed 24 months) per the requirements of ISTC-5221(c) to verify the closed position.

Flow through these check valves cannot be measured because instrumentation is not installed. However, failure of these valves to promptly stroke to their proper positions will affect the starting time of the diesel when the diesel is started from just one air bank. A diesel alarm will activate if the starting time exceeds start failure requirements. Verification that the diesel starts without the start failure alarm constitutes a full stroke test for the check valves. The test to start the diesels on one air bank is performed on a rotating basis once every six months. Based on this rotation, each check valve will be full flow tested once every 18 months.

Testing Frequency

One valve in the group will be disassembled and inspected on a reactor refueling test frequency (nominally every 18 months but not to exceed 24 months) and on a rotating basis to verify the closed position per the requirements of ISTC-5221(c).

Every 18 months, the check valves will be full stroke tested by discharging only one air bank to start the diesel. The failure of either the solenoid or check valves to open will promptly give a diesel alarm. Further investigation would identify problems with the operability of these valves. The diesel start time will be recorded and compared to a maximum allowable start time during this test.

REACTOR REFUELING JUSTIFICATION RRV-33

System : Main Steam System

Valve(s): 1-MS-PCV-101A
1-MS-PCV-101B
1-MS-PCV-101C

Category: B

Class : 2

Function: Main Steam Header Discharge to Atmosphere Pressure Control Valves

Reactor Refueling Justification

These valves are located above the main steam lines on the top floor of the main steam valve house. The top floor of the main steam valve house is exposed to heat loads from the main steam lines and is a high temperature environment, particularly in the summer time.

If the plant is at power, upstream isolation valves must be closed manually. Then the pressure control valves must be stroked and observed locally when performing the fail-safe test. Given that test personnel must stand near the high temperature main steam lines and valves when manipulating the upstream manual isolation valves, and the high temperatures in the main steam valve house, this test presents a hazardous situation for the test personnel when performed under high temperature conditions. To ensure the safety of test personnel, this test should be performed during reactor refueling outages when the main steam lines and the main steam valve house are cooler.

Testing Frequency

These valves will be exercised closed every reactor refueling.

REACTOR REFUELING JUSTIFICATION RRV-34

System : Chemical and Volume Control

Valve(s): 1-CH-252
1-CH-264
1-CH-277

Category: C

Class : 2

Function: Charging Pump Recirculation Line Check Valves

Reactor Refueling Justification

These charging pump recirculation line check valves cannot be back seat tested with flow because each recirculation line has a pressure reducing orifice just downstream of each check valve. If one charging pump is running, the recirculation check valves on the non-running pumps will not receive an observable differential pressure to back seat the valves.

To back seat the valves, the recirculation lines between the check valves and the downstream motor operated isolation valve 1-CH-MOV-1373 must be isolated and the volume pressurized. All three charging pumps would be secured during the test. Securing all charging pumps can only be done during cold shutdown after the reactor coolant system is depressurized. Given the difficulty of performing the back seat test, the test should be performed during reactor refueling outages.

Testing Frequency

These valves will be exercised full open and closed every reactor refueling.

REACTOR REFUELING JUSTIFICATION RRV-35

System : Residual Heat Removal

Valve(s): 1-RH-MOV-1700
1-RH-MOV-1701
1-RH-MOV-1720A
1-RH-MOV-1720B

Category: B

Class : 1

Function: RHR Supply and Return Isolation Valves

Reactor Refueling Justification

These valves isolate the residual heat removal (RHR) System, which is a 600 lb class system, from the reactor coolant system (RCS) during power operation. These valves are normally closed and cannot be opened when RCS pressure is above 418 psig due to system interlocks. Therefore, the valves cannot be full or part-stroke exercised during power operation. Also, the valve controllers do not allow for a part-stroke exercise test.

The RHR suction valves 1-RH-MOV-1700 and 1701 are located in series. To cycle these valves for testing the RHR pumps must be secured. The RHR system is required to be operable during cold shutdown and reactor refueling while fuel is in the reactor vessel. Therefore, these valves should only be cycled when the reactor vessel is defueled.

The RHR suction and return valves are tested every 18 months as required by Technical Requirements Manual TR 3.7.8. The RHR return isolation valves 1-RH-MOV-1720A and B will continue to be tested at the same interval as the suction valves because the small increase in safety gained by testing them during cold shutdown does not justify the burden of testing and tracking the RHR isolation valves on different test intervals.

Testing Frequency

These valves will be full stroke exercised every reactor refueling.

REACTOR REFUELING JUSTIFICATION RRV-36

System : Diesel Fuel Oil System

Valve(s): 1-EG-254
1-EG-266
1-EG-278
1-EG-295

Category: C

Class : NC

Function: Diesel Fuel Oil Pump Discharge Check Valves

Reactor Refueling Justification

Each fuel oil supply line is a dedicated flow path with no cross connect line to the other fuel oil supply lines. Therefore, the check valves cannot be back seat tested with flow. Given the system configuration and the accessibility of the check valves, disassembly and inspection is the preferred method to verify valve closure.

Testing Frequency

These valves will be exercised full open every three months. One valve in the group will be disassembled and inspected on a reactor refueling test frequency (nominally every 18 months but not to exceed 24 months) and on a rotating basis to verify closure per the requirements of ISTC-5221(c).

REACTOR REFUELING JUSTIFICATION RRV-37

System : FW

Valve(s) : 1-FW-526
1-FW-527
1-FW-528

Category : C

Class : 3

Function : Auxiliary Feedwater Pump Oil Cooler Check Valves

Reactor Refueling Justification

The closed position for these check valves cannot be verified by flow because reverse flow may be blocked by a downstream sight glass. Specifically, the sight glass flow indicators contain a flapper to aid in determining flow. Although the Vendor Technical Manual describes the flapper as not having a tight seal capability and is not intended as a check valve, the question remains as to how much restriction the flapper creates. The manufacturer was not able to provide information to the expected leakage past the sight glass flapper. Since the restriction of flow through the sight glass indicator caused by the internal flapper cannot be quantified, there is no assurance that the check valve will actually be in the closed position if a back flow test is used. Given the system configuration, the best method to verify that the valves close properly is to disassemble and examine the valves.

Testing Frequency

To verify the close positions, valves 1-FW-526, 527, and 528 will be grouped together, and one valve from each group will be disassembled and examined every reactor refueling. A different valve from each group will be disassembled for each examination. The test method and frequency are in accordance with ISTC-5221(c). The valves are tested with flow to the open position every three months.

REACTOR REFUELING JUSTIFICATION RRV-38

System : Quench Spray

Valve(s): 1-QS-147
1-QS-150

Category: AC

Class : 2

Function: Quench Spray Bleed Line Isolation Check Valves

Reactor Refueling Justification

These check valves are located on the bleed lines that run from the quench spray (QS) supply lines inside containment to the containment sump strainer. With the current line configuration, the valves cannot be tested full open with flow. The valves are downstream from the portion of the QS system that is used to test the QS pumps. Flow cannot be established past the QS pump discharge line motor operated isolation valves without introducing spray to the containment. Given the system configuration, manual manipulation during disassembly and inspection is the only method to verify that the valves stroke to the full open position.

Also, these valves are located inside containment (subatmospheric) making it impractical to perform the test during normal operation. The valves are subject to leak testing once every 24 months. Due to the inaccessibility of the valves, the leak testing will be performed every reactor refueling outage. Verification of the closed position will be performed by the leak test.

Testing Frequency

The valves will be disassembled and inspected each reactor refueling outage on a rotating basis to verify that the valves stroke to the full open position per the requirements of ISTC-5221(c). The closed position for each valve will be verified by leak testing every reactor refueling outage.

4.8 ALTERNATIVE TESTING FOR NON-CODE VALVES

According to the minutes of public meeting on Generic Letter 89-04, "Paragraph (g) of 10CFR 50.55a requires the use of Section XI of the ASME Code for inservice testing of components covered by the Code. For other components important to safety, the licensee also has the burden of demonstrating their continued operability." The minutes go on to state that, "The Code-required IST program is a reasonable vehicle to provide a periodic demonstration of the operability of pumps and valves not covered by the Code. If non-Code components are included in the ASME Code IST program (or some other licensee-developed inservice testing program) and certain Code provisions cannot be met, the Commission regulations (10 CFR 50.55a) do not require a 'request for relief' to be submitted to the staff. Nevertheless, documentation that provides assurance of the continued operability of the non-Code components through the performed tests should be available at the plant site." Non-Code components are components that are important to safety but are not in systems or portions of systems that are classified ASME Class 1, 2 or 3.

North Anna Power Station has elected to include certain non-Code components in the ASME IST program. Where the Code provisions cannot be met for non-Code components, alternative testing is performed that is adequate to ensure continued operability. The alternate testing is described in this section. There may be other deviations from Code provisions that are not described in this section. For these cases, documentation is available at the plant site.

As indicated in the minutes of public meeting on Generic Letter 89-04, a 'request for relief' need not be submitted for non-Code components. Therefore, the alternative tests described in this section are not 'requests for relief' but are provided for information.

NON-CODE ALTERNATIVE TESTING VNC-1

Alternative Testing for Non-Code Components
Alternative Provides Acceptable Level of Quality and Safety.

1.0 ASME Non-Code Components Affected

Valve(s): 1-IA-944 1-IA-963
1-IA-948 1-IA-967
1-IA-952 1-IA-971
1-IA-959 1-IA-975

System : Instrument Air

Category: AC

Class : NC

Function: Main Steam Pressure Control and Auxiliary Feedwater Valves Air Accumulators Isolation Check Valves

2.0 Applicable Code Edition and Addenda

ASME OM Code, 2004 Edition

3.0 Applicable Code Requirements

ISTC-3630 - Category A valves, which perform a function other than containment isolation, shall be seat leakage tested to verify their leak-tight integrity.

4.0 Reason for Alternative

Check valves 1-IA-944, 948 and 952 isolate the normal instrument air supply from the backup bottled air supply for the main steam pressure control valves 1-MS-PCV-101A, B and C. Valves 1-IA-959, 963 and 971 isolate the normal instrument air supply to the auxiliary feedwater valves 1-FW-HCV-100A, B and C. Valves 1-IA-967 and 975 isolate the normal instrument air supply to the auxiliary feedwater valves 1-FW-PCV-159A and B.

The purpose of the bottled air supplies is to ensure that the main steam PCVs and the auxiliary feedwater valves can be remotely operated following an accident. The bottled air supplies must be able to cycle the main valves a specified number of times over a predetermined period in order to meet their design requirements. In lieu of a leakage test for the isolation check valves given above, the main valves will be cycled the required number of times over the required period with the normal air supply isolated and vented. This test provides verification that the isolation check valves are leak tight enough to allow the main valves to perform their safety functions.

5.0 Alternative

In lieu of a leakage test for the isolation check valves given above, the main valves will be cycled the required number of times over the required period as defined by their design requirements with the normal air supply isolated and vented.

6.0 Duration of Alternative

The alternative described in Non-Code Alternative VNC-1 will be used for the North Anna Power Station Unit 1 Fourth Ten Year Inservice Testing Interval.

NON-CODE ALTERNATIVE TESTING VNC-2

Alternative Testing for Non-Code Components
Alternative Provides Acceptable Level of Quality and Safety.

1.0 ASME Non-Code Components Affected

Valve(s): 1-EG-SOV-600HA 1-EG-SOV-600JA
1-EG-SOV-601HA 1-EG-SOV-607JA
1-EG-SOV-600HB 1-EG-SOV-600JB

System : Emergency Diesel Air Services

Category: B

Class : NC

Function: Diesel Air Start Solenoid Valves

2.0 Applicable Code Edition and Addenda

ASME OM Code, 2004 Edition

3.0 Applicable Code Requirements

ISTC-5151(c) - Stroke time shall be measured to at least the nearest second.

4.0 Reason for Alternative

The solenoid valves have actuation times considerably under a second and there is no visual reference on the solenoid valve to determine when it has stroked. Therefore, the stroke time cannot be measured. The solenoid valves are activated every month to start the diesels. Both air banks are discharged when performing the monthly test. After the test, the air bank pressure is recorded to verify a decrease in pressure, which confirms that the air banks discharged properly.

5.0 Alternative

The solenoid valves will be full stroke exercised monthly by observing that the valves perform their intended function (if the diesel starts, the air bank pressures decrease and the air supply manifold maintains its integrity, then the solenoid valves were stroked successfully).

6.0 Duration of Alternative

The alternative described in Non-Code Alternative VNC-2 will be used for the North Anna Power Station Unit 1 Fourth Ten Year Inservice Testing Interval.

NON-CODE ALTERNATIVE TESTING VNC-3

Alternative Testing for Non-Code Components
Alternative Provides Acceptable Level of Quality and Safety.

1.0 ASME Non-Code Components Affected

Valve(s): 1-FW-FCV-1478
1-FW-FCV-1479
1-FW-FCV-1488
1-FW-FCV-1489
1-FW-FCV-1498
1-FW-FCV-1499

System : Feedwater

Category: B

Class : NC

Function: Main Feedwater Regulating and Bypass Valves

2.0 Applicable Code Edition and Addenda

ASME OM Code, 2004 Edition

3.0 Applicable Code Requirements

ISTA-3130(b) states: "Code Cases shall be applicable to the edition and addenda specified in the test plan." The edition and addenda specified in the test plan for the fourth Ten-Year interval for the North Anna Nuclear Power Plant is the ASME OM code 2004 Edition."

4.0 Reason for Alternative

Code Case OMN-8 "Alternative Rules for Preservice and Inservice Testing of Power-Operated Valves That Are Used for System Control and Have a Safety Function per OM-10," contains no applicability statement. In the latest edition/addenda incorporated by reference in 10 CFR 50.55a(b)(3) (i.e., the 2001 Edition with Addenda through the OMb-2003), the expiration date given for OMN-8 is November 20, 2006. OMN-8 is included in the 2006 Addenda to the 2004 Edition of the OM Code with a new expiration date of November 20, 2009;

however, neither the 2004 Edition of the OM Code nor any subsequent Addenda have been incorporated by reference in 10 CFR 50.55a(b)(3). Paragraph 10 CFR 50.55a(b)(6) references RG 1.192, which approves the use of Code Case OMN-8. Code Case OMN-8 provides an alternative to stroke time testing power operated control valves that have only a fail safe safety function. The pneumatically power-operated control valves listed above have only a fail safe safety function.

5.0 Alternative

The requirements of OMN-8 will be applied to the valves listed above in lieu of the provisions for power-operated control valve testing specified in paragraphs ISTC-5131, ISTC-5132 and ISTC-5133(b) in Subsection ISTC of the 2004 Edition of the ASME OM Code.

Note that paragraphs ISTC 4.2.4, ISTC 4.2.8, ISTC 4.2.9(b) and ISTC 1.2(b) identified in OMN-8 are from the 1995 Edition of Subsection ISTC and correspond to paragraphs ISTC-5131, ISTC-5132, ISTC-5133(b), and ISTC-1200(b) from the 2004 Edition for pneumatically power-operated valves, respectively.

According to TS SR 3.7.3.1, these valves must be verified to stroke in a time less than the maximum limit given in TS SR 3.7.3.1. Therefore, the stroke times will be measured and compared to the maximum limit in TS SR 3.7.3.1, but the stroke time tests will not be subject to the requirements of paragraphs ISTC-5131, ISTC-5132 and ISTC-5133(b).

6.0 Duration of Alternative

The alternative described in Non-Code Alternative VNC-3 will be used for the North Anna Power Station Unit 1 Fourth Ten Year Inservice Testing Interval.

NON-CODE ALTERNATIVE TESTING VNC-4

Alternative Testing for Non-Code Components
Alternative Provides Acceptable Level of Quality and Safety.

1.0 ASME Non-Code Components Affected

Valve(s): 1-EG-RV-103A
1-EG-RV-103B
1-EG-RV-105A
1-EG-RV-105B

System : EG

Category: C

Class : NC

Function: Diesel Fuel Oil Pump Discharge Relief Valves

2.0 Applicable Code Edition and Addenda

ASME OM Code, 2004 Edition

3.0 Applicable Code Requirements

According to ASME OM Appendix I, I-8130(a), "Test Media. Valves shall be tested with the normal system operating fluid and temperature for which they are designed. Alternative liquids and different temperatures may be used, provided the requirements of I-8300 are met." The normal system operating fluid for the diesel fuel oil pump discharge relief valves is diesel fuel oil. The valves are tested with water.

4.0 Reason for Alternative

Safety and relief valves used in liquid service are certified by the manufacturers with water in accordance with the requirements of the National Board Inspection Code. This certification process applies to valves used in diesel fuel oil service. Also, there is no correlation from water to diesel fuel oil provided by the manufacturer.

To test the relief valves with diesel fuel oil would require a separate set of test equipment. The current test equipment would be contaminated if fuel oil was used and would not be suitable for use with relief valves that are used in water service.

Testing the set point pressure of the diesel fuel oil pump discharge relief valves with water instead of diesel fuel oil is an industry accepted practice and provides adequate assurance that the relief valves will function properly and protect the diesel fuel oil pump discharge piping.

5.0 Alternative

The set pressure test for the diesel fuel oil pump discharge relief valves will be performed with water instead of diesel fuel oil.

6.0 Duration of Alternative

The alternative described in Non-Code Alternative VNC-4 will be used for the North Anna Power Station Unit 1 Fourth Ten Year Inservice Testing Interval.

NON-CODE ALTERNATIVE TESTING VNC-5

Alternative Testing for Non-Code Components
Alternative Provides Acceptable Level of Quality and Safety.

1.0 ASME Non-Code Components Affected

Safety and relief valves listed in Table VNC-5.

2.0 Applicable Code Edition and Addenda

ASME OM Code, 2004 Edition

3.0 Applicable Code Requirements

ISTC Appendix I, I-8120, "Compressible Fluid Services Other Than Steam", I-8120(h) requires that a minimum of 5 minutes shall elapse between successive openings.

ISTC Appendix I, I-8120, "Liquid Service", I-8130(g) requires that a minimum of 5 minutes shall elapse between successive openings.

4.0 Reason for Alternative

The ASME OM Code requires a minimum of two consecutive valve actuations to establish the lift setpoint of safety and relief valves and that a minimum of 5 minutes elapse between successive tests. For the valves listed in Table VNC-5, the requirement for verifying temperature stability by waiting 5 minutes between successive lift setpoint tests is inappropriate and adds no value. Lift setpoint testing is conducted using water or nitrogen as the test medium, and the tests are performed when the valve and the test medium are at the same temperature. There is a negligible effect on lift setpoint due to minor temperature deviations that might occur during testing.

Eliminating the 5-minute wait time will minimize system outage times and radiation exposure. Numerous non-Code classed safety and relief valves associated with contaminated systems are bench tested in the hot shop, located within the RCA in the Auxiliary Building, to prevent contamination.

Entry into the hot shop testing facility requires full Anti-C's. During the test, personnel are exposed to background radiation levels present in the Auxiliary Building hot shop as well as the radiation levels associated with the specific valve being tested. The proposed elimination of the hold time between successive tests for non-Code classed safety/relief valves tested under ambient conditions using a test medium at ambient conditions reduces the duration of each test. Most importantly, reducing the hold times reduces the length of time that the test personnel must spend in close proximity to the valve. As a result, personnel radiation exposure is reduced.

For all safety and relief valves, including those located in "clean areas" that are in-situ/bench-tested in the Mechanical Maintenance Shop, the proposed elimination of the hold time between successive tests will reduce the duration of each test. Since there are numerous safety/relief valve tests for both units and most require at least two people, the proposed elimination of the hold time between successive tests is expected to also result in a significant cumulative reduction in limited manpower resources.

5.0 Alternative

For non-Code classed safety and relief valves tested under ambient conditions using test medium at ambient conditions, the 5-minute hold requirement between successive openings will be deleted.

In accordance with 1-8120(a), and 1-8130(a), the test medium used will be the same as the normal system operating fluid and temperature for which the valves in Table VNC-5 were designed. For liquid service this will be water. For compressible fluid services other than steam, this will be nitrogen. In both cases, the test stand and surrounding environment ambient temperature conditions are relatively fixed with negligible changes occurring over the set pressure and seat tightness test determinations. There is a negligible effect on valve setpoint due to minor temperature deviations that might occur at these conditions.

6.0 Duration of Alternative

The alternative described in Non-Code Alternative VNC-5 will be used for the North Anna Power Station Unit 1 Fourth Ten Year Inservice Testing Interval.

Table VNC-5

Valve Number	System	ASME Class	Test Medium	Component Protected
1-CC-RV-104A	Component Cooling	NC	Water	Containment penetration
1-CC-RV-104B	Component Cooling	NC	Water	Containment penetration
1-CC-RV-104C	Component Cooling	NC	Water	Containment penetration
1-EG-RV-103A	Emergency Diesel Generator	NC	Water[1]	Diesel fuel pump oil discharge pipe
1-EG-RV-103B	Emergency Diesel Generator	NC	Water[1]	Diesel fuel pump oil discharge pipe
1-EG-RV-105A	Emergency Diesel Generator	NC	Water[1]	Diesel fuel pump oil discharge pipe
1-EG-RV-105B	Emergency Diesel Generator	NC	Water[1]	Diesel fuel pump oil discharge pipe
1-EG-RV-602HA	Emergency Diesel Generator	NC	Nitrogen	Air receiver tank
1-EG-RV-602HB	Emergency Diesel Generator	NC	Nitrogen	Air receiver tank
1-EG-RV-602JA	Emergency Diesel Generator	NC	Nitrogen	Air receiver tank
1-EG-RV-602JB	Emergency Diesel Generator	NC	Nitrogen	Air receiver tank
1-GN-RV-108A-1	Bottled Nitrogen Supply	NC	Nitrogen	Nitrogen supply lines
1-GN-RV-108A-2	Bottled Nitrogen Supply	NC	Nitrogen	Nitrogen supply lines
1-GN-RV-108A-3	Bottled Nitrogen Supply	NC	Nitrogen	Nitrogen supply lines
1-GN-RV-108B-1	Bottled Nitrogen Supply	NC	Nitrogen	Nitrogen supply lines
1-GN-RV-108B-2	Bottled Nitrogen Supply	NC	Nitrogen	Nitrogen supply lines
1-GN-RV-108B-3	Bottled Nitrogen Supply	NC	Nitrogen	Nitrogen supply lines
1-IA-RV-110	Instrument Air Supply	NC	Nitrogen	Containment penetration
1-IA-RV-111	Instrument Air Supply	NC	Nitrogen	Containment penetration

Note 1 - refer to VNC-4 for change in liquid from fuel oil to water.

5.0 STATION TECHNICAL POSITIONS

Technical Position TP-01

Bi-directional Testing of Check Valves

Purpose

The purpose of this Technical Position is to establish the station position for the verification of the non-safety direction exercise testing of check valves by normal plant operations.

Applicability

This Technical Position is applicable to testing of the non-safety function (direction) of check valves which are included in the Inservice Testing Program. This position applies to those check valves listed in Table TP-01 that are required to be tested in accordance with Subsection ISTC (ASME OM Code 2004 Edition). This Technical Position does not apply to testing of the safety function (direction) of check valves included in the Inservice Testing Program.

Background

The ASME OM Code section ISTC-3550, "Valves in Regular Use", states:

> "Valves that operate in the course of plant operation at a frequency that would satisfy the exercising requirements of this Subsection need not be additionally exercised, provided that the observations otherwise required for testing are made and analyzed during such operation and recorded in the plant record at intervals no greater than specified in ISTC-3510."

Section ISTC-3510 requires that check valves shall be exercised nominally every 3 months with exceptions (for extended periods) referenced.

Section ISTC-5221(a)(2) states:

> "Check valves that have a safety function in only the open direction shall be exercised by initiating flow and observing that the obturator has traveled [to] either the full open position or to the position required to perform its intended function(s) (see ISTA-1100), and verify closure."

Section ISTC-5221(a)(3) states:

> "Check valves that have a safety function in only the close direction shall be exercised by initiating flow and observing that the obturator has traveled [to] at least the partially open position,[3] and verify that on cessation or reversal of flow, the obturator has traveled to the seat."
>
> "[3] The partially open position should correspond to the normal or expected system flow."

Normal or expected system flow may vary with plant configuration and alignment; however, the open "safety function" of a check valve typically requires a specified design accident flow rate or some other means to verify that the valve strokes to the full open position. Since the North Anna Operations staff is trained in recognizing normal plant conditions, Operator judgment is acceptable in determining the check valve non-safety direction by obtaining normal or expected flow rates for the plant operating condition.

In summary, the check valve non-safety function direction is satisfactorily demonstrated by verifying closure or passing normal or expected flow as applicable.

Position

North Anna will verify the non-safety position of check valves included in the Inservice Testing Program. In lieu of a dedicated surveillance to perform the non-safety direction testing, the following alternate verification methods may be performed as follows:

1. Observation of plant processes that a check valve is satisfying its non-safety direction function may be used. One example is a check valve that has a safety function only in the closed direction and normally provides a flow path to maintain plant operations. If the check valve is not open to pass flow, an alarm or indication would identify a problem to the operator. The operator would respond to take appropriate actions. A Condition Report would then be generated for the abnormal plant condition which would identify the check valve failure.

2. Observation of plant logs and other records satisfied by Operator or Engineering reviews may be an acceptable method for verifying a check valves non-safety direction during normal plant operations.

The open or closed non-safety function shall be recorded at a frequency required by ISTC-3510, nominally every 3 months, with exceptions as provided, in plant records such as North Anna Operator Logs, chart recorders, station procedures, etc. All of the non-safety positions in Table TP-01 are for the open position. The test frequencies given in Table TP-01 for the open position are based on the frequency for the safety function closed position as allowed by ISTC-3522(a). According to ISTC-3522(a), "Open and close tests need only be performed at an interval when it is practicable to perform both tests." The safety function direction testing requires a Quality Record in the form of a surveillance test. Records as indicated above are satisfactory for the non-safety direction testing.

Justification

This Technical Position requires that the method of determining the non-safety position be established and documented in the IST Program Plan. The plant systems and operator actions provide for the observations that the valve is satisfying its non-safety function. Additionally, the recording of parameters which demonstrate valve position is at a frequency in accordance with ISTC-3510. These actions collectively demonstrate the non-safety position of Inservice Testing Program check valves in regular use as required by ISTC-3550.

Table TP-01

Valve Number	System	ASME Class	Non-Safety Direction	Test Freq[1]	Normal Operational Function	Alternate Position Verification Record
1-CC-84	Component Cooling	2	Open	RR	main CC supply to "A" RC pump coolers	Operator Log
1-CC-111	Component Cooling	3	Open	RR	CC supply to "A" RC pump thermal barrier cooler	Operator Log
1-CC-119	Component Cooling	2	Open	RR	main CC supply to "B" RC pump coolers	Operator Log
1-CC-146	Component Cooling	3	Open	RR	CC supply to "B" RC pump thermal barrier cooler	Operator Log
1-CC-154	Component Cooling	2	Open	RR	main CC supply to "C" RC pump coolers	Operator Log
1-CC-181	Component Cooling	3	Open	RR	CC supply to "C" RC pump thermal barrier cooler	Operator Log
1-CC-546	Component Cooling	2	Open	RR	CC supply to containment air coolers	Operator Log
1-CC-559	Component Cooling	2	Open	RR	CC supply to containment air coolers	Operator Log
1-CC-572	Component Cooling	2	Open	RR	CC supply to containment air coolers	Operator Log
1-CH-322	Chemical and Volume Control	1	Open	RR	main charging supply header	Operator Log
1-CH-336	Chemical and Volume Control	1	Open	RR	"A" RC pump seal water supply	Operator Log
1-CH-358	Chemical and Volume Control	1	Open	RR	"B" RC pump seal water supply	Operator Log
1-CH-380	Chemical and Volume Control	1	Open	RR	"C" RC pump seal water supply	Operator Log
1-FW-47	Feedwater	2	Open	CS	"A" main feedwater supply	Operator Log
1-FW-79	Feedwater	2	Open	CS	"B" main feedwater supply	Operator Log
1-FW-111	Feedwater	2	Open	CS	"C" main feedwater supply	Operator Log

Note 1 – Test frequencies are based on the frequency of the safety direction test.

Table TP-01

Valve Number	System	ASME Class	Non-Safety Direction	Test Freq[1]	Normal Operational Function	Alternate Position Verification Record
1-IA-55	Instrument Air	2	Open	RR	main instrument air supply to containment	1-OP-46.3
1-IA-149	Instrument Air	2	Open	RR	radiation monitor system return to containment	1-OP-62.2
1-MS-NRV-101A	Main Steam	2	Open	CS	"A" main steam supply header	Operator Log
1-MS-NRV-101B	Main Steam	2	Open	CS	"B" main steam supply header	Operator Log
1-MS-NRV-101C	Main Steam	2	Open	CS	"C" main steam supply header	Operator Log
1-SI-66	Safety Injection	2	Open	RR	supply to boron injection tank	Operator Log
1-SI-106	Safety Injection	2	Open	RR	nitrogen supply to SI accumulators	1-OP-7.3
1-SI-110	Safety Injection	2	Open	RR	SI accumulator makeup supply	1-OP-7.3
1-WT-38	SG Chemical Feed	2	Open	03	"A" SG chemical feed supply	CH-12.914 CH-12.915 CH-12.916
1-WT-50	SG Chemical Feed	2	Open	03	"B" SG chemical feed supply	CH-12.914 CH-12.915 CH-12.916
1-WT-66	SG Chemical Feed	2	Open	03	"C" SG chemical feed supply	CH-12.914 CH-12.915 CH-12.916

Note 1 – Test frequencies are based on the frequency of the safety direction test.

6.0 REPORTING OF INSERVICE TEST RESULTS

6.1 PUMP INSERVICE TESTING PROGRAM

A record of each pump will be maintained in accordance with ISTB-9100 that includes the following:

1) the manufacturer and the manufacturer's model and serial or other identification number,

2) a copy or summary of the manufacturer's acceptance test report if available,

3) a copy of the pump manufacturer's operating limits.

In addition to the requirements of ISTA-3120 and 3160, a record of inservice test plans and procedures will be maintained in accordance with ISTB-9200 that includes the following:

1) the identification of the pumps subject to testing,

2) the category of each pump,

3) the hydraulic circuit to be used,

4) the location and type of measurement for the required test parameters,

5) the method of determining test parameter values which are not directly measured by instrumentation.

A record of test results will be maintained in accordance with ISTA-9200.

A record of corrective action will be maintained in accordance with ISTA-9240 that includes a summary of the corrections made, the subsequent inservice tests and confirmation of operation adequacy, and the printed or typed name and signature of the individual responsible for the corrective action and verification of results.

The Pump Inservice Test Program, associated surveillance test procedures and results will be kept at North Anna Power Station. They will be available for audit by the NRC.

6.2 VALVE INSERVICE TESTING PROGRAM

A record of each valve will be maintained in accordance with ISTC-9110 that includes the following:

1) the manufacturer and the manufacturer's model and serial or other unique identification number,

2) a copy or summary of the manufacturer' acceptance test report if available,

3) preservice test results and

4) limiting value of full stroke time.

This IST Program Plan meets the requirements of ISTC-9200, Test Plans.

A record of test results will be maintained in accordance with ISTA-9230.

A record of corrective action will be maintained in accordance with ISTA-9240 that includes a summary of the corrections made, the subsequent inservice tests and confirmation of operation adequacy, and the printed or typed name and signature of the individual responsible for the corrective action and verification of results.

The Valve Inservice Test Program, associated surveillance test procedures and results will be kept at North Anna Power Station. They will be available for audit by NRC.

7.0 QUALITY ASSURANCE PROGRAM

The Pump and Valve Inservice Test Program activities will be conducted in accordance with the Technical Specifications for North Anna Power Station.

Attachment 2

FOURTH INTERVAL INSERVICE TESTING PROGRAM PLAN

DECEMBER 15, 2010 THROUGH DECEMBER 14, 2020

North Anna Power Station
Unit 2
Virginia Electric and Power Company
(Dominion)

VIRGINIA ELECTRIC AND POWER COMPANY
(DOMINION)

NORTH ANNA POWER STATION UNIT 2

INSERVICE TESTING PROGRAM PLAN

FOR PUMPS AND VALVES

FOURTH INSPECTION INTERVAL

DECEMBER 15, 2010 - DECEMBER 14, 2020

REVISION 0

COMMERCIAL OPERATION: DECEMBER, 1980

ADDRESSES:

VIRGINIA ELECTRIC AND POWER COMPANY
P. O. BOX 26666
RICHMOND, VIRGINIA 23261

NORTH ANNA POWER STATION
P. O. BOX 402
MINERAL, VIRGINIA 23117

N2PVI4

TABLE OF CONTENTS

INSERVICE TESTING PROGRAM PLAN FOR PUMPS AND VALVES

1.0 INTRODUCTION

2.0 GENERAL PROGRAM DEVELOPMENT

- 2.1 Program Scope
- 2.2 Program Update

3.0 PUMP INSERVICE TEST PROGRAM DESCRIPTION

- 3.1 Program Development Philosophy
- 3.2 Program Implementation
- 3.3 Program Administration
- 3.4 Pump Reference List
- 3.5 Pump Inservice Test Table
- 3.6 Pump Test Program Relief Requests
- 3.7 Alternative Testing for Non-Code Pumps

4.0 VALVE INSERVICE TEST PROGRAM DESCRIPTION

- 4.1 Program Development Philosophy
- 4.2 Program Implementation
- 4.3 Program Administration
- 4.4 Valve Inservice Test Table
- 4.5 Valve Test Program Relief Requests
- 4.6 Valve Test Program Cold Shutdown Justifications
- 4.7 Valve Test Program Reactor Refueling Justifications
- 4.8 Alternative Testing for Non-Code Valves

5.0 TECHNICAL POSITIONS

6.0 REPORTING OF INSERVICE TEST RESULTS

- 6.1 Pump Inservice Test Program
- 6.2 Valve Inservice Test Program

7.0 QUALITY ASSURANCE PROGRAM

INSERVICE TESTING PROGRAM FOR PUMPS AND VALVES

1.0 INTRODUCTION

This Pump and Valve Inservice Test (IST) Program Plan is applicable to the North Anna Power Station Unit 2 which received its construction permit on February 19, 1971 and began commercial operation in December 1980. North Anna Power Station Unit 2 is a Pressurized Water Reactor located on Lake Anna in Louisa County, Virginia. The plant employs a Westinghouse Electric Corp. Nuclear Steam System.

Pumps and the IST Program for Valves. The development, implementation and administration of these programs are detailed in subsequent sections. This IST Program Plan applies to the fourth 10-year IST interval for North Anna Power Station Unit 2 which starts on December 15, 2010 and ends on December 14, 2020.

2.0 GENERAL PROGRAM DEVELOPMENT

The Code of Federal Regulations, paragraph 10CFR50.55a(f) describes the inservice testing requirements for pumps and valves which are classified as ASME Code Class 1, Class 2 and Class 3. Paragraph 10CFR50.55a(f)(4)(ii) states that,

> "Inservice tests to verify operational readiness of pumps and valves, whose function is required for safety, conducted during successive 120-month intervals must comply with the requirements of the latest edition and addenda of the Code incorporated by reference in paragraph (b) of this section 12 months before the start of the 120-month interval (or the optional ASME Code cases listed in NRC Regulatory Guide 1.147, Revision 15, or 1.192 that are incorporated by reference in paragraph (b) of this section), subject to the limitations and modifications listed in paragraph (b) of this section."

The Code of Federal Regulations, paragraph 10CFR50.55a(b)(3) refers to the ASME Code for Operation and Maintenance (OM) of Nuclear Power Plants, and includes the 2004 Edition. The Code reference became effective on September 10, 2008 and applies to the fourth IST interval for North Anna Unit 2. The IST Program for the fourth IST interval complies with this edition.

The ASME OM Code requires that the owner of each nuclear power plant prepare a "plan" for testing and inspection of systems and components under the jurisdiction of 10CFR50.55a. The Code, Subsection ISTA, General Requirements, Subsection ISTB, Inservice Testing of Pumps, and Subsection ISTC, Inservice Testing of Valves apply to the IST program. Subsections ISTA, ISTB and ISTC establish the IST program scope with the provision that the rules apply only to ASME Code Classes 1, 2 and 3 as stated by the NRC in the Code of Federal Regulations.

In accordance with ASME OM Code-2004, the following are required to be included in the testing program:

1) Certain centrifugal pumps, centrifugal pumps with vertical line shafts and positive displacement pumps that are provided with an emergency power source and required to perform a specific function in shutting down the reactor to the safe shutdown condition, maintaining the safe shutdown condition or mitigating the consequences of an accident.

2) Certain valves and pressure relief devices (and their actuating and position indicating systems) which are required to perform a specific function in shutting down the reactor to the safe shutdown condition, maintaining the safe shutdown condition or mitigating the consequences of an accident.

In addition to the general Code requirements outlined above, there are other interpretations and positions that have come about as a result of past regulatory and licensee actions including Generic Letter 89-04 and NUREG-1482, Guidelines for Inservice Testing at Nuclear Power Plants, Revision 1. Other than these guides, there is no specific guidance for developing the IST Program scope of testing. Therefore, a process was established by which the scope of the North Anna ASME IST Program is determined including components that are to be included and the extent and type of testing required for each. Based on this process, the philosophy and assumptions used in determining the test requirements for selected pumps and valves were documented.

2.1 PROGRAM SCOPE

In the course of developing the program scope, each of the significant safety systems included within the ASME Code Class boundaries and certain safety systems outside of the ASME Code Class boundaries (such as the emergency diesel fuel oil transfer system) were evaluated with respect to the function of each component and the need for its operability as it relates to the scope of the ASME OM Code. Supporting documents used include,

Final Safety Analysis Report (FSAR),
Technical Specifications,
USNRC Regulatory Guide 1.26, Revision 3,
Past program correspondence,
Operating Procedures (normal, emergency and abnormal) and
Plant System Descriptions.

The sequence used during the development effort was as follows:

1) Each of the plant systems was subjected to an overview to determine any potential active safety function as described in the scope statement. Those systems with no safety functions related to the ASME OM Code scope were excluded from further consideration. Plant documents as well as operating staff comments were utilized in this phase.

2) For the remaining systems, flow diagrams were studied and components that could have an active or passive safety function (other than simply maintaining the pressure boundary) were identified for further evaluation.

3) The function of components identified from the flow diagrams was determined based on available documentation, staff review or general

experience of the evaluator. Component test requirements were derived based on the component function(s) and Code requirements.

4) Available documents were reviewed and specific or implied component operational requirements were compared to the component functions.

5) The results of the steps described above were reviewed by several knowledgeable members of the plant staff and evaluated for accuracy and consistency, and compiled in an IST basis document. Based on this review, the final program scope was derived and the IST Program Plan developed.

2.2 PROGRAM UPDATE

During the fourth IST interval, it is expected that the scope of the IST Program will occasionally be modified in response to activities including, but not limited to:

1) plant design changes,

2) changes in operating conditions (e.g. normal valve lineup),

3) changes in accident mitigating procedure philosophy and

4) later editions and addenda to the ASME OM Code.

As a result, it is expected that the IST Program will be revised to ensure continued compliance with the Code requirements relating to the scope of the test program. The site supervisor responsible for the IST Program is provided copies of plant modifications that are designated by engineering to have a potential IST impact. Should a change require a program revision, the IST corporate and site coordinators would then implement the change to the program plan and the appropriate test procedure(s) in a timely manner.

3.0 PUMP INSERVICE TEST PROGRAM DESCRIPTION

3.1 PROGRAM DEVELOPMENT PHILOSOPHY

North Anna Technical Specification 5.5.7 describes the surveillance requirements that apply to the inservice testing of ASME Code Class 1, 2 and 3 pumps. The North Anna Unit 2 Inservice Testing (IST) Program for Pumps has been established to meet the requirements of 10CFR50, the ASME OM Code, Subsection ISTB and Technical Specifications.

The scope of the program includes ASME Code Class 1, 2 and 3, and certain non-Code class pumps that are required to perform a specific function in shutting down the reactor to the safe shutdown condition, maintaining the safe shutdown condition or mitigating the consequences of an accident.

ISTB defines the rules and requirements of inservice testing of Code Class 1, 2, and 3 pumps and states that each pump to be tested by the rules of this subsection shall be identified by the owner and listed in the plant records.

The purpose of the IST Program Plan is to identify the pumps that are considered by Virginia Electric and Power Company (Dominion) as having a safety function and are therefore subject to the testing requirements of ISTB. The intent of the Code is to assess operational readiness and detect potentially adverse changes in the mechanical condition of these pumps. The relief requests for the IST Program Plan identify Code requirements considered to be impractical, provide technical basis for the request and propose alternate testing when warranted.

3.2 PROGRAM IMPLEMENTATION

Surveillance testing is performed to detect equipment malfunction or degradation and to initiate corrective action. The North Anna Power Station Unit 2 IST Program provides a schedule for testing safety-grade pumps and is implemented as part of normal periodic surveillance testing.

Reference data is gathered during initial surveillance tests. With the ASME OM Code, these initial reference tests can be a preservice test in accordance with ISTB-3100 or the first inservice test in accordance with ISTB-3200.

The ASME Code, ISTB-2000 defines pumps as either Group A pumps or Group B pumps. Group A pumps are pumps that are operated continuously or routinely during normal operation, cold shutdown, or

refueling operations. Group B tests apply to Group B pumps are pumps in standby systems that are not operated routinely except for testing.

The Code describes Group A and Group B testing requirements specific to Group A and Group B pumps. The Code also describes comprehensive test requirements. Comprehensive tests apply to both Group A and B pumps and require more accurate pressure instrumentation (0.5% versus 2% for the Group A and B tests), but are performed on a less frequent basis.

The Group A test parameters include differential pressure (or discharge pressure for positive displacement pumps), flow rate, vibration and speed for variable speed pumps. The Group B test parameters include differential pressure for pumps other than positive displacement pumps, flow rate and speed for variable speed pumps. Differential pressure need not be measured for positive displacement pumps. The Group A and B test parameters are typically measured with normal plant instrumentation. If practicable, the Group A and B reference tests shall be performed within ± 20% of the pump design flow rate. If not practicable, the reference test shall be performed at the highest practical flow rate. Comprehensive test parameters include differential pressure (or discharge pressure for positive displacement pumps), flow rate, vibration and speed for variable speed pumps. The comprehensive reference test shall be performed within ± 20% of the pump design flow rate. Any deviation from this requirement for comprehensive tests requires a request for relief from Code provisions.

Group A and B inservice tests shall be performed every three months as required by Table ISTB-3400-1. Any deviation from this test frequency requires a request for relief from Code provisions. During subsequent surveillance tests, flow rate is normally selected as the independent test parameter and is set to match the reference flow rate. Other hydraulic and mechanical performance parameters are measured and evaluated against the appropriate reference values. The results of such evaluations determine whether or not corrective action is warranted. Comprehensive tests are performed every two years in a manner similar to the Group A and B inservice tests.

Each pump in the IST Program is tested according to a detailed test procedure. The procedure includes, as a minimum:

1) <u>References</u>: This section identifies references applicable to Technical Specifications and other necessary material as drawings.

2) <u>Purpose</u>: This section identifies test objectives.

3) Initial Conditions: Each procedure should identify those independent actions or procedures which shall be completed and station conditions which shall exist prior to use.

4) Precautions: Precautions should be established to alert the individual performing the task to those situations in which important measures should be taken early or where extreme care should be used to protect equipment and personnel. Cautionary notes applicable to specific steps in the procedure should be included in the main body of the procedure as appropriate and should be identified as such.

5) Instructions: The main body of a procedure should contain step by step instructions in the degree of detail necessary for performing a required test.

6) Acceptance Criteria: The ranges within which test data are considered acceptable are established and included in the test procedure. In the event that data fall outside the acceptable range, operator action is governed by approved station procedures.

Finally, it is recognized that the IST Program for Pumps sets forth minimum testing requirements. Additional testing is performed, as required, after pump maintenance or as determined necessary by personnel at North Anna Power Station.

3.3 PROGRAM ADMINISTRATION

The engineering staff at North Anna is responsible for the administration of the IST Program for Pumps. The operations staff is responsible for performing the periodic tests as required by this program. The IST Program for Pumps is implemented by station periodic test procedures.

3.4 PUMP REFERENCE LIST

This list gives a brief description of each pump identified in the Pump IST Program.

1-CH-P-2C	Boric Acid Transfer Pumps
1-CH-P-2D	Drawing: 11715-CBM-95A, Sh 1 of 4

Description: These centrifugal pumps are used to supply concentrated boric acid to the blender; recirculate the contents of the boric acid storage tanks; recirculate the contents of the BIT, and for emergency boration. The boric acid transfer pumps operate at two constant speeds. The low speed is used when recirculating the contents of the boric acid storage tanks and BIT. The high speed (approximately double the low speed) is used during blended makeups and when the pumps discharge to the charging pump suction header during emergency boration events. The tests are conducted with the pumps on high speed. The pumps operate routinely during normal operation and are defined as Group A pump

2-CC-P-1A	Component Cooling Water Pumps
2-CC-P-1B	Drawing: 11715-CBM-79A, Sh 2 of 3

Description: These centrifugal pumps supply cooling water to transfer heat from heat exchangers containing reactor coolant or other radioactive fluids. The component cooling water pumps are constant speed pumps that operate routinely during normal operation and are defined as Group A pumps.

2-CH-P-1A	High Head Safety Injection/Charging Pumps
2-CH-P-1B	Drawing: 12050-CBM-95B, Sh 2 of 2
2-CH-P-1C	

Description: These centrifugal pumps supply high pressure borated water to the reactor coolant system following a safety injection signal, and to provide normal charging to the reactor coolant system. The high head safety injection/charging pumps are constant speed pumps that operate routinely during normal operation and are defined as Group A pumps.

2-EG-P-2HA	Emergency Diesel Generator Fuel Oil Transfer Pumps
2-EG-P-2HB	Drawing: 11715-FB-35A, Sh 2 of 2
2-EG-P-2JA	
2-EG-P-2JB	

Description: These positive displacement pumps supply fuel oil to the emergency diesel generator fuel oil day tank which directly supplies the emergency diesel generator. The emergency diesel generator fuel oil pumps are in a standby system and are defined as Group B pumps. The pumps are constant speed pumps.

2-FW-P-2	Auxiliary Feedwater Pumps
2-FW-P-3A	Drawing: 12050-CBM-74A, Sh 3 of 4
2-FW-P-3B	

Description: These centrifugal pumps supply auxiliary feedwater to the steam generators following a loss of normal feedwater flow. The auxiliary feedwater pumps are in a standby system and are defined as Group B pumps. The steam driven pump 2-FW-P-2 is a variable speed pump, and the motor driven pumps 2-FW-P-3A and 3B are constant speed pumps.

2-HV-P-20A	Control and Relay Room Chilled Water Pumps
2-HV-P-20B	Drawing: 11715-CBB-40C, Sh 2 of 3
2-HV-P-20C	

Description: These centrifugal pumps circulate chilled water for the control and relay room cooling coils. The control and relay room chilled water pumps are constant speed pumps that operate routinely during normal operation and are defined as Group A pumps.

2-HV-P-22A	Control and Relay Room Condenser Water Pumps
2-HV-P-22B	Drawing: 11715-CBB-40D, Sh 2 of 3
2-HV-P-22C	

Description: These centrifugal pumps supply service water to the control and relay room air conditioning condenser water system. The control and relay room condenser water pumps are constant speed pumps that operate routinely during normal operation and are defined as Group A pumps.

2-QS-P-1A	Quench Spray Pumps
2-QS-P-1B	Drawing: 12050-CBM-91A, Sh 2 of 4

Description: These centrifugal pumps supply a borated, chemically treated spray to cool, remove iodine from, and depressurize the containment atmosphere following a containment depressurization actuation signal. The quench spray pumps are in a standby system and are defined as Group B pumps. The pumps are constant speed pumps.

2-RH-P-1A	Residual Heat Removal Pumps
2-RH-P-1B	Drawing: 12050-CBM-94A, Sh 1 of 2

Description: These centrifugal pumps remove decay heat from the reactor core and the reactor coolant system during plant cool down. The residual heat removal pumps are constant speed pumps that operate routinely during cold shutdowns and reactor refuelings and are defined as Group A pumps.

2-RS-P-1A	Inside Recirculation Spray Pumps
2-RS-P-1B	Drawing: 12050-CBM-91A, Sh 3 of 4

Description: These vertical line shaft pumps supply a borated spray to cool and depressurize the containment atmosphere following a containment depressurization actuation signal and maintain containment subatmospheric following an accident. The inside recirculation spray pumps are in a standby system and are defined as Group B pumps. Also, the pump sumps are maintained dry. According to ISTB 5.5, they require a comprehensive test at least once every two years. No quarterly testing is required. Because the pumps are inside containment, they will receive the comprehensive test during reactor refueling outages. The pumps are constant speed pumps.

2-RS-P-2A	Outside Recirculation Spray Pumps
2-RS-P-2B	Drawing: 12050-CBM-91A, Sh 4 of 4

Description: These vertical line shaft pumps supply borated spray to cool and depressurize the containment atmosphere following a containment depressurization actuation signal and maintain containment subatmospheric following an accident. The outside recirculation spray pumps are in a standby system and are defined as Group B pumps. Also, the pump sumps are maintained dry. According to ISTB 5.5, they require

a comprehensive test at least once every two years. No quarterly testing is required. The pumps are constant speed pumps.

2-RS-P-3A	Casing Cooling Pumps
2-RS-P-3B	Drawing: 12050-CBM-91B, Sh 1 of 1

Description: These centrifugal pumps supply cool borated water to the outside recirculation spray pumps to increase the net positive suction head of these pumps. The casing cooling pumps are in a standby system and are defined as Group B pumps. The pumps are constant speed pumps.

2-SI-P-1A	Low Head Safety Injection Pumps
2-SI-P-1B	Drawing: 12050-CBM-96A, Sh 1 of 3

Description: These vertical line shaft pumps supply low pressure borated water to the reactor coolant system following a safety injection signal. The low head safety injection pumps are in a standby system and are defined as Group B pumps. The pumps are constant speed pumps.

2-SW-P-1A	Service Water Pumps
2-SW-P-1B	Drawing: 11715-CBM-78A, Sh 3 of 5

Description: These vertical line shaft centrifugal pumps supply cooling water to the component cooling and recirculation spray heat exchangers as well as other safety related components. The service water pumps are constant speed pumps that operate routinely during normal operation and are defined as Group A pumps.

3.5 PUMP INSERVICE TEST TABLE

The Pump Inservice Test Table identifies the pumps to be tested, code classes, required test quantities and frequencies. Relief from test requirements is requested in cases where test requirements are determined to be impractical. Where relief is requested, technical justification is provided along with alternative test methods when applicable. Relief requests are contained in Section 3.6.

For non-Code pumps, a request for relief is not necessary when provisions of the Code are determined to be impractical. Section 3.7 contains a discussion of the testing requirements for non-Code pumps and descriptions of alternative testing in cases where the provisions of the Code are not met.

To aid the reader in interpreting the Pump Inservice Test Table, brief explanations of the table headings and abbreviations are provided below.

1) Pump Number - Each pump in the plant has a unique "mark" number which identifies the system to which the pump belongs.

2) Drawing and Sheet Number, Coordinate - The specific coordinates of each valve are supplied to facilitate location of the valves on the flow diagrams provided.

3) ASME Class - ASME Code Class of each pump as per 10CFR50.55a and Regulatory Guide 1.26, Revision 3.

Note: NC is for non-Code pumps. These pumps are important to safety but are not in systems that are classified ASME Class 1, 2 or 3.

4) ISTB Group - Pump group as defined in ISTB-2000 where:

Group A pumps - pumps that are operated continuously or routinely during normal operation, cold shutdown, or refueling operations and

Group B pumps - pumps in standby systems that are not operated routinely except for testing.

5) Flow Path - The flow path used for the test can either be the normal flow path for the system (either the normal operation flow path and/or the normal accident flow path), a recirculation flow path or a flow path dedicated to testing (test loop).

6) System Resist - Either FIXED for a test loop with a fixed system resistance or VARIABLE for a test loop with a system resistance that can be varied.

7) Test Type - The required ISTB test quantities. Test types with "C_" as a prefix represent comprehensive tests that are conducted every 24 months. Test types without the prefix "C_" represent either Group A or B tests that are conducted every three months unless the test frequency has been deferred to cold shutdown or reactor refueling by a relief request. Examples of test type abbreviations are given below.

DEV_HEAD - developed pump head

DIFF_PRESSURE - differential pressure

DISCH_PRESSURE - discharge pressure

FLOW - flow

FLOW_TOTAL - flow total is the sum of branch flows

PUMP_SPEED - pump speed for variable speed pumps

VIB_(suffix) - vibration measured at a given bearing (e.g., IN for inboard bearing) and in a given orientation (e.g., HORZ for the horizontal direction)

8) Test Freq - The test frequency with the following abbreviations:

03 - the test will be performed every three months (Group A and B pump tests shall be performed every three months as required by Table ISTB-3400-1.)

CS - the test will be performed every cold shutdown (a relief request explains the need for deviating from ISTB Table ISTB-3400-1 test frequency requirements)

RR - the test will be performed every reactor refueling (a relief request explains the need for deviating from ISTB Table ISTB-3400-1 test frequency requirements)

24 - the test will be performed every 24 months (pumps with sumps that are maintained dry shall only have a comprehensive test performed every 2 years per ISTB-3430).

9) Ref Flow Status – ISTB-3300 requires that the reference flow rate be within 20% of pump design flow if practicable. The reference flow rate is the flow rate used to establish acceptance criteria. FULL (full flow) in this column indicates that the reference flow rate is within 20% of pump design flow. If the reference flow rate does not meet this requirement a note is provided at the end of the pump table explaining the impracticality.

For Group A and B tests, ISTB-3300(e)(2) allows for testing outside the 20% range due to impracticality. For comprehensive tests, ISTB-3300(e)(1) requires that the tests to be performed within the 20% range with no exceptions. Therefore, relief from Code provisions is required when testing outside the 20% range for comprehensive tests.

10) Relief Request - Relief requests are presented in Section 3.6.

11) Non-Code Alter Test - Non-Code alternative tests apply to pumps that are not ASME Code class 1, 2 or 3. These tests are alternatives to Code tests and are described in Section 3.7.

NORTH ANNA UNIT 2
FOURTH INSERVICE TESTING INTERVAL
PUMP INSERVICE TEST TABLE

PUMP NUMBER	DRAWING NUMBER	SHEET NO	COOR	ASME CLASS	ISTB GROUP	FLOW PATH	SYSTEM RESIST	TEST TYPE	TEST FREQ	REF FLOW STATUS	RELIEF REQUEST (P-)	NON-CODE ALTER (PNC-)
1-CH-P-2C	11715-CBM-095A	1 OF 4	B6	3	A	NORMAL	VARIABLE	C_DIFF_PRESS	24			
								C_FLOW	24	FULL		
								C_VIB_IN_HORZ	24		1	
								C_VIB_IN_VERT	24		1	
								C_VIB_OUT_AX	24		1	
								C_VIB_OUT_HORZ	24		1	
								C_VIB_OUT_VERT	24		1	
						RECIRC	FIXED	DIFF_PRESSURE	03		5	
								FLOW	NA	Note 1	5	
								VIB_IN_HORZ	03		1	
								VIB_IN_VERT	03		1	
								VIB_OUT_AX	03		1	
								VIB_OUT_HORZ	03		1	
								VIB_OUT_VERT	03		1	
	BORIC ACID TRANSFER CENTRIFUGAL PUMP											
1-CH-P-2D	11715-CBM-095A	1 OF 4	B7	3	A	NORMAL	VARIABLE	C_DIFF_PRESS	24			
								C_FLOW	24	FULL		
								C_VIB_IN_HORZ	24		1	
								C_VIB_IN_VERT	24		1	
								C_VIB_OUT_AX	24		1	
								C_VIB_OUT_HORZ	24		1	
								C_VIB_OUT_VERT	24		1	
						RECIRC	FIXED	DIFF_PRESSURE	03		5	
								FLOW	NA	Note 1	5	
								VIB_IN_HORZ	03		1	
								VIB_IN_VERT	03		1	
								VIB_OUT_AX	03		1	
								VIB_OUT_HORZ	03		1	
								VIB_OUT_VERT	03		1	
	BORIC ACID TRANSFER CENTRIFUGAL PUMP											
2-CC-P-1A	11715-CBM-079A	2 OF 3	E6	3	A	NORMAL	VARIABLE	C_DIFF_PRESS	24			
								C_FLOW_TOTAL	24	FULL	4	

NORTH ANNA UNIT 2
FOURTH INSERVICE TESTING INTERVAL
PUMP INSERVICE TEST TABLE

PUMP NUMBER	DRAWING NUMBER	SHEET NO	COOR	ASME CLASS	ISTB GROUP	FLOW PATH	SYSTEM RESIST	TEST TYPE	TEST FREQ	REF FLOW STATUS	RELIEF REQUEST (P-)	NON-CODE ALTER (PNC-)
2-CC-P-1A	11715-CBM-079A	2 OF 3	E6	3	A	NORMAL	VARIABLE	C_VIB_IN_HORZ	24			
								C_VIB_IN_VERT	24			
								C_VIB_OUT_AX	24			
								C_VIB_OUT_HORZ	24		1	
								C_VIB_OUT_VERT	24		1	
								DIFF_PRESSURE	03			
								FLOW_TOTAL	03	FULL	4	
								VIB_IN_HORZ	03		1	
								VIB_IN_VERT	03		1	
								VIB_OUT_AX	03		1	
								VIB_OUT_HORZ	03		1	
								VIB_OUT_VERT	03		1	
	COMPONENT COOLING WATER CENTRIFUGAL PUMP											
2-CC-P-1B	12050-CBM-079A	2 OF 3	C6	3	A	NORMAL	VARIABLE	C_DIFF_PRESS	24			
								C_FLOW_TOTAL	24	FULL	4	
								C_VIB_IN_HORZ	24		1	
								C_VIB_IN_VERT	24			
								C_VIB_OUT_HORZ	24		1	
								C_VIB_OUT_VERT	24		1	
								DIFF_PRESSURE	03			
								FLOW_TOTAL	03	FULL	4	
								VIB_IN_HORZ	03		1	
								VIB_IN_VERT	03			
								VIB_OUT_AX	03			
								VIB_OUT_HORZ	03		1	
								VIB_OUT_VERT	03		1	
	COMPONENT COOLING WATER CENTRIFUGAL PUMP											
2-CH-P-1A	12050-CBM-095B	2 OF 2	C4	2	A	NORMAL ACCIDENT	FIXED	C_DIFF_PRESS	24			
								C_FLOW_TOTAL	24	FULL		
								C_VIB_IN_HORZ	24			
								C_VIB_IN_VERT	24			

NORTH ANNA UNIT 2
FOURTH INSERVICE TESTING INTERVAL
PUMP INSERVICE TEST TABLE

PUMP NUMBER	DRAWING NUMBER	SHEET NO	COOR	ASME CLASS	ISTB GROUP	FLOW PATH	SYSTEM RESIST	TEST TYPE	TEST FREQ	REF FLOW STATUS	RELIEF REQUEST (P-)	NON-CODE ALTER (PNC-)
2-CH-P-1A	12050-CBM-095B	2 OF 2	C7	2	A	NORMAL ACCIDENT	FIXED	C_VIB_OUT_HORZ	24			
								C_VIB_OUT_VERT	24			
								C_VIB_THST_AX	24			
								C_VIB_THST_HORZ	24			
								C_VIB_THST_VERT	24			
						NORMAL CHARGING	VARIABLE	DIFF_PRESSURE	03			
								FLOW_TOTAL	03	Note 2	8	
								VIB_IN_HORZ	03			
								VIB_IN_VERT	03			
								VIB_OUT_HORZ	03			
								VIB_OUT_VERT	03			
								VIB_THRUST_AX	03			
								VIB_THRUST_HORZ	03			
								VIB_THRUST_VERT	03			
	HIGH HEAD SAFETY INJECTION/CHARGING CENTRIFUGAL PUMP											
2-CH-P-1B	12050-CBM-095B	2 OF 2	C6	2	A	NORMAL ACCIDENT	FIXED	C_DIFF_PRESS	24			
								C_FLOW_TOTAL	24	FULL		
								C_VIB_IN_HORZ	24			
								C_VIB_IN_VERT	24			
								C_VIB_OUT_AX	24			
								C_VIB_OUT_HORZ	24		1	
								C_VIB_OUT_VERT	24		1	
								C_VIB_THST_AX	24		1	
								C_VIB_THST_HORZ	24		1	
								C_VIB_THST_VERT	24			
						NORMAL CHARGING	VARIABLE	DIFF_PRESSURE	03			
								FLOW_TOTAL	03	Note 2	8	
								VIB_IN_HORZ	03		1	
								VIB_IN_VERT	03			
								VIB_OUT_HORZ	03			
								VIB_OUT_VERT	03			
								VIB_THRUST_AX	03			

NORTH ANNA UNIT 2
FOURTH INSERVICE TESTING INTERVAL
PUMP INSERVICE TEST TABLE

PUMP NUMBER	DRAWING NUMBER	SHEET NO	COOR	ASME CLASS	ISTB GROUP	FLOW PATH	SYSTEM RESIST	TEST TYPE	TEST FREQ	REF FLOW STATUS	RELIEF REQUEST (P-)	NON-CODE ALTER (PNC-)
2-CH-P-1B	12050-CBM-095B	2 OF 2	C6	2	A	NORMAL CHARGING	VARIABLE	VIB_THRUST_HORZ	03		1	
								VIB_THRUST_VERT	03			
	HIGH HEAD SAFETY INJECTION/CHARGING CENTRIFUGAL PUMP											
2-CH-P-1C	12050-CBM-095B	2 OF 2	C7	2	A	NORMAL ACCIDENT	FIXED	C_DIFF_PRESS	24			
								C_FLOW_TOTAL	24	FULL		
								C_VIB_IN_HORZ	24			
								C_VIB_IN_VERT	24			
								C_VIB_OUT_HORZ	24			
								C_VIB_OUT_VERT	24			
								C_VIB_THST_AX	24			
								C_VIB_THST_HORZ	24			
								C_VIB_THST_VERT	24			
						NORMAL CHARGING	VARIABLE	DIFF_PRESSURE	03			
								FLOW_TOTAL	03	Note 2	8	
								VIB_IN_HORZ	03			
								VIB_IN_VERT	03			
								VIB_OUT_HORZ	03			
								VIB_OUT_VERT	03			
								VIB_THRUST_AX	03			
								VIB_THRUST_HORZ	03			
								VIB_THRUST_VERT	03			
	HIGH HEAD SAFETY INJECTION/CHARGING CENTRIFUGAL PUMP											
2-EG-P-2HA	11715-FB-035A	2 OF 2	C7	NC	B	NORMAL	VARIABLE	C_DISCHF_PRESS	24			1
								C_FLOW	24	FULL		1
								C_VIB_IN_HORZ	24			1
								C_VIB_IN_VERT	24			1
								C_VIB_OUT_AX	24			
								C_VIB_OUT_HORZ	24			1
								C_VIB_OUT_VERT	24			
								DISCH_PRESSURE	03			1
								FLOW	03	FULL		1

NORTH ANNA UNIT 2
FOURTH INSERVICE TESTING INTERVAL
PUMP INSERVICE TEST TABLE

PUMP NUMBER	DRAWING NUMBER	SHEET NO	COOR	ASME CLASS	ISTB GROUP	FLOW PATH	SYSTEM RESIST	TEST TYPE	TEST FREQ	REF FLOW STATUS	RELIEF REQUEST (P-)	NON-CODE ALTER (PNC-)
	EMERGENCY DIESEL GENERATOR FUEL OIL TRANSFER POSITIVE DISPLACEMENT PUMP											
2-EG-P-2HB	11715-FB-035A	2 OF 2	C6	NC	B	NORMAL	VARIABLE	C_DISCHF_PRESS	24			1
								C_FLOW	24	FULL		1
								C_VIB_IN_HORZ	24			
								C_VIB_IN_VERT	24			1
								C_VIB_OUT_AX	24			
								C_VIB_OUT_HORZ	24			
								C_VIB_OUT_VERT	24			2
								DISCH_PRESSURE	03			1
								FLOW	03	FULL		1
	EMERGENCY DIESEL GENERATOR FUEL OIL TRANSFER POSITIVE DISPLACEMENT PUMP											
2-EG-P-2JA	11715-FB-035A	2 OF 2	E8	NC	B	NORMAL	VARIABLE	C_DISCHF_PRESS	24			1
								C_FLOW	24	FULL		1
								C_VIB_IN_HORZ	24			1
								C_VIB_IN_VERT	24			1
								C_VIB_OUT_AX	24			
								C_VIB_OUT_HORZ	24			
								C_VIB_OUT_VERT	24			
								DISCH_PRESSURE	03			1
								FLOW	03	FULL		1
	EMERGENCY DIESEL GENERATOR FUEL OIL TRANSFER POSITIVE DISPLACEMENT PUMP											
2-EG-P-2JB	11715-FB-035A	2 OF 2	E6	NC	B	NORMAL	VARIABLE	C_DISCHF_PRESS	24			1
								C_FLOW	24	FULL		1
								C_VIB_IN_HORZ	24			1
								C_VIB_IN_VERT	24			1
								C_VIB_OUT_AX	24			1
								C_VIB_OUT_HORZ	24			
								C_VIB_OUT_VERT	24			
								DISCH_PRESSURE	03			1

NORTH ANNA UNIT 2
FOURTH INSERVICE TESTING INTERVAL
PUMP INSERVICE TEST TABLE

PUMP NUMBER	DRAWING NUMBER	SHEET NO	COOR	ASME CLASS	ISTB GROUP	FLOW PATH	SYSTEM RESIST	TEST TYPE	TEST FREQ	REF FLOW STATUS	RELIEF REQUEST (P-)	NON-CODE ALTER (PNC-)
2-EG-P-2JB	11715-FB-035A	2 OF 2	E6	NC	B	NORMAL	VARIABLE	FLOW	03	FULL		1
	EMERGENCY DIESEL GENERATOR FUEL OIL TRANSFER POSITIVE DISPLACEMENT PUMP											
2-FW-P-2	12050-CBM-074A	3 OF 4	B8	3	B	TEST LOOP	VARIABLE	C_DIFF_PRESS	24			
								C_FLOW_TOTAL	24	FULL		
								C_PUMP_SPEED	24			
								C_VIB_IN_HORZ	24			
								C_VIB_IN_VERT	24			
								C_VIB_OUT_AX	24			
								C_VIB_OUT_HORZ	24			
								C_VIB_OUT_VERT	24			
								DIFF_PRESSURE	03			
								FLOW_TOTAL	03	FULL		
								PUMP_SPEED	03			
	AUXILIARY FEEDWATER STEAM DRIVEN CENTRIFUGAL PUMP											
2-FW-P-3A	12050-CBM-074A	3 OF 4	B6	3	B	TEST LOOP	VARIABLE	C_DIFF_PRESS	24			
								C_FLOW_TOTAL	24	FULL		
								C_VIB_IN_HORZ	24			
								C_VIB_IN_VERT	24			
								C_VIB_OUT_AX	24		1	
								C_VIB_OUT_HORZ	24			
								C_VIB_OUT_VERT	24		1	
								DIFF_PRESSURE	03			
								FLOW_TOTAL	03	FULL		
	AUXILIARY FEEDWATER MOTOR DRIVEN CENTRIFUGAL PUMP											
2-FW-P-3B	12050-CBM-074A	3 OF 4	B5	3	B	TEST LOOP	VARIABLE	C_DIFF_PRESS	24			
								C_FLOW_TOTAL	24	FULL		
								C_VIB_IN_HORZ	24			
								C_VIB_IN_VERT	24			
								C_VIB_OUT_AX	24			

NORTH ANNA UNIT 2
FOURTH INSERVICE TESTING INTERVAL
PUMP INSERVICE TEST TABLE

PUMP NUMBER	DRAWING NUMBER	SHEET NO	COOR	ASME CLASS	ISTB GROUP	FLOW PATH	SYSTEM RESIST	TEST TYPE	TEST FREQ	REF FLOW STATUS	RELIEF REQUEST (P-)	NON-CODE ALTER (PNC-)
2-FW-P-3B	12050-CBM-074A	3 OF 3	B5	3	B	TEST LOOP	VARIABLE	C_VIB_OUT_HORZ	24			
								C_VIB_OUT_VERT	24			
								DIFF_PRESSURE	03			
								FLOW_TOTAL	03	FULL		
	AUXILIARY FEEDWATER MOTOR DRIVEN CENTRIFUGAL PUMP											
2-HV-P-20A	11715-CBB -040C	2 OF 3	E6	3	A	NORMAL	VARIABLE	C_DIFF_PRESS	24			
								C_FLOW_TOTAL	24	FULL		
								C_VIB_UP_MTR_90	24			
								C_VIB_UP_MTR_AX	24		1	
								C_VIB_UP_MTR_IN	24			
								DIFF_PRESSURE	03			
								FLOW_TOTAL	03	FULL		
								VIB_UP_MTR_90	03		1	
								VIB_UP_MTR_AX	03		1	
								VIB_UP_MTR_IN	03			
	MAIN CONTROL ROOM AIR CONDITIONING SYSTEM CHILLER SIDE CENTRIFUGAL PUMP											
2-HV-P-20B	11715-CBB -040C	2 OF 3	C4	3	A	NORMAL	VARIABLE	C_DIFF_PRESS	24			
								C_FLOW_TOTAL	24	FULL		
								C_VIB_UP_MTR_90	24		1	
								C_VIB_UP_MTR_AX	24		1	
								C_VIB_UP_MTR_IN	24			
								DIFF_PRESSURE	03			
								FLOW_TOTAL	03	FULL		
								VIB_UP_MTR_90	03		1	
								VIB_UP_MTR_AX	03		1	
								VIB_UP_MTR_IN	03			
	MAIN CONTROL ROOM AIR CONDITIONING SYSTEM CHILLER SIDE CENTRIFUGAL PUMP											
2-HV-P-20C	11715-CBB -040C	2 OF 3	D6	3	A	NORMAL	VARIABLE	C_DIFF_PRESS	24			
								C_FLOW_TOTAL	24	FULL		

NORTH ANNA UNIT 2
FOURTH INSERVICE TESTING INTERVAL
PUMP INSERVICE TEST TABLE

PUMP NUMBER	DRAWING NUMBER	SHEET NO	COOR	ASME CLASS	ISTB GROUP	FLOW PATH	SYSTEM RESIST	TEST TYPE	TEST FREQ	REF FLOW STATUS	RELIEF REQUEST (P-)	NON-CODE ALTER (PNC-)
2-HV-P-20C	11715-CBB -040C	2 OF 3	D6	3	A	NORMAL	VARIABLE	C_VIB_UP_MTR_90	24			
								C_VIB_UP_MTR_AX	24			
								C_VIB_UP_MTR_IN	24			
								DIFF_PRESSURE	03			
								FLOW_TOTAL	03	FULL		
								VIB_UP_MTR_90	03			
								VIB_UP_MTR_AX	03			
								VIB_UP_MTR_IN	03			
	MAIN CONTROL ROOM AIR CONDITIONING SYSTEM CHILLER SIDE CENTRIFUGAL PUMP											
2-HV-P-22A	11715-CBB-040D	2 OF 3	E6	3	A	NORMAL	VARIABLE	C_DIFF_PRESS	24			
								C_FLOW_TOTAL	24	FULL		
								C_VIB_UP_MTR_90	24			
								C_VIB_UP_MTR_AX	24		1	
								C_VIB_UP_MTR_IN	24		1	
								DIFF_PRESSURE	03			
								FLOW	03	FULL		
								VIB_UP_MTR_90	03		1	
								VIB_UP_MTR_AX	03		1	
								VIB_UP_MTR_IN	03		1	
	MAIN CONTROL ROOM AIR CONDITIONING SYSTEM CONDENSER SIDE CENTRIFUGAL PUMP											
2-HV-P-22B	11715-CBB-040D	2 OF 3	B6	3	A	NORMAL	VARIABLE	C_DIFF_PRESS	24			
								C_FLOW_TOTAL	24	FULL		
								C_VIB_UP_MTR_90	24			
								C_VIB_UP_MTR_AX	24		1	
								C_VIB_UP_MTR_IN	24			
								DIFF_PRESSURE	03			
								FLOW	03	FULL		
								VIB_UP_MTR_90	03			
								VIB_UP_MTR_AX	03		1	
								VIB_UP_MTR_IN	03		1	

NORTH ANNA UNIT 2
FOURTH INSERVICE TESTING INTERVAL
PUMP INSERVICE TEST TABLE

PUMP NUMBER	DRAWING NUMBER	SHEET NO	COOR	ASME CLASS	ISTB GROUP	FLOW PATH	SYSTEM RESIST	TEST TYPE	TEST FREQ	REF FLOW STATUS	RELIEF REQUEST (P-)	NON-CODE ALTER (PNC-)
	MAIN CONTROL ROOM AIR CONDITIONING SYSTEM CONDENSER SIDE CENTRIFUGAL PUMP											
2-HV-P-22C	11715-CBB-040D	2 OF 3	D6	3	A	NORMAL	VARIABLE	C_DIFF_PRESS	24			
								C_FLOW_TOTAL	24	FULL		
								C_VIB_UP_MTR_90	24		1	
								C_VIB_UP_MTR_AX	24		1	
								C_VIB_UP_MTR_IN	24		1	
								DIFF_PRESSURE	03			
								FLOW	03	FULL		
								VIB_UP_MTR_90	03		1	
								VIB_UP_MTR_AX	03		1	
								VIB_UP_MTR_IN	03		1	
	MAIN CONTROL ROOM AIR CONDITIONING SYSTEM CONDENSER SIDE CENTRIFUGAL PUMP											
2-QS-P-1A	12050-CBM-091A	2 OF 4	B5	2	B	RECIRC	FIXED	C_DIFF_PRESS	24			
								C_FLOW_TOTAL	24	FULL		
								C_VIB_IN_HORZ	24			
								C_VIB_IN_VERT	24			
								C_VIB_OUT_AX	24			
								C_VIB_OUT_HORZ	24			
								C_VIB_OUT_VERT	24			
								DIFF_PRESSURE	03			
								FLOW_TOTAL	03	FULL		
	CONTAINMENT SPRAY CENTRIFUGAL PUMP											
2-QS-P-1B	12050-CBM-091A	2 OF 4	B4	2	B	RECIRC	FIXED	C_DIFF_PRESS	24			
								C_FLOW_TOTAL	24	FULL		
								C_VIB_IN_HORZ	24			
								C_VIB_IN_VERT	24			
								C_VIB_OUT_AX	24			
								C_VIB_OUT_HORZ	24			
								C_VIB_OUT_VERT	24			

NORTH ANNA UNIT 2
FOURTH INSERVICE TESTING INTERVAL
PUMP INSERVICE TEST TABLE

PUMP NUMBER	DRAWING NUMBER	SHEET NO	COOR	ASME CLASS	ISTB GROUP	FLOW PATH	SYSTEM RESIST	TEST TYPE	TEST FREQ	REF FLOW STATUS	RELIEF REQUEST (P-)	NON-CODE ALTER (PNC-)
2-QS-P-1B	12050-CBM-091A	2 OF 4	B4	2	B	RECIRC	FIXED	DIFF_PRESSURE	03			
								FLOW_TOTAL	03	FULL		
	CONTAINMENT SPRAY CENTRIFUGAL PUMP											
2-RH-P-1A	12050-CBM-094A	1 OF 2	D7	2	A	NORMAL	VARIABLE	C_DIFF_PRESS	24			
								C_FLOW	24	FULL		
								C_VIB_UP_MTR_90	24		1	
								C_VIB_UP_MTR_AX	24		1	
								C_VIB_UP_MTR_IN	24		1	
								DIFF_PRESSURE	CS		2	
								FLOW	CS	FULL	2	
								VIB_UP_MTR_90	CS		1, 2	
								VIB_UP_MTR_AX	CS		1, 2	
								VIB_UP_MTR_IN	CS		1, 2	
	RESIDUAL HEAT REMOVAL CENTRIFUGAL PUMP											
2-RH-P-1B	12050-CBM-094A	1 OF 2	D4	2	A	NORMAL	VARIABLE	C_DIFF_PRESS	24			
								C_FLOW	24	FULL		
								C_VIB_UP_MTR_90	24		1	
								C_VIB_UP_MTR_AX	24		1	
								C_VIB_UP_MTR_IN	24		1	
								DIFF_PRESSURE	CS		2	
								FLOW	CS	FULL	2	
								VIB_UP_MTR_90	CS		1, 2	
								VIB_UP_MTR_AX	CS		1, 2	
								VIB_UP_MTR_IN	CS		1, 2	
	RESIDUAL HEAT REMOVAL CENTRIFUGAL PUMP											
2-RS-P-1A	12050-CBM-091A	3 OF 4	B7	2	B	TEST LOOP	VARIABLE	C_DIFF_PRESS	24			
								C_FLOW	24	FULL		
								C_VIB_UP_MTR_90	24			
								C_VIB_UP_MTR_AX	24			

NORTH ANNA UNIT 2
FOURTH INSERVICE TESTING INTERVAL
PUMP INSERVICE TEST TABLE

PUMP NUMBER	DRAWING NUMBER	SHEET NO	COOR	ASME CLASS	ISTB GROUP	FLOW PATH	SYSTEM RESIST	TEST TYPE	TEST FREQ	REF FLOW STATUS	RELIEF REQUEST (P-)	NON-CODE ALTER (PNC-)
2-RS-P-1A	12050-CBM-091A INSIDE RECIRCULATION SPRAY VERTICAL LINE SHAFT PUMP	3 OF 4	B7	2	B	TEST LOOP	VARIABLE	C_VIB_UP_MTR_IN	24			
2-RS-P-1B	12050-CBM-091A INSIDE RECIRCULATION SPRAY VERTICAL LINE SHAFT PUMP	3 OF 4	B4	2	B	TEST LOOP	VARIABLE	C_DIFF_PRESS	24			
								C_FLOW	24	FULL		
								C_VIB_UP_MTR_90	24			
								C_VIB_UP_MTR_AX	24			
								C_VIB_UP_MTR_IN	24			
2-RS-P-2A	12050-CBM-091A OUTSIDE RECIRCULATION SPRAY VERTICAL LINE SHAFT PUMP	4 OF 4	B4	2	B	TEST LOOP	VARIABLE	C_DIFF_PRESS	24			
								C_FLOW	24	Note 3	6	
								C_VIB_UP_MTR_90	24			
								C_VIB_UP_MTR_AX	24			
								C_VIB_UP_MTR_IN	24			
2-RS-P-2B	12050-CBM-091A OUTSIDE RECIRCULATION SPRAY VERTICAL LINE SHAFT PUMP	4 OF 4	B3	2	B	TEST LOOP	VARIABLE	C_DIFF_PRESS	24			
								C_FLOW	24	Note 3	6	
								C_VIB_UP_MTR_90	24			
								C_VIB_UP_MTR_AX	24			
								C_VIB_UP_MTR_IN	24			
2-RS-P-3A	12050-CBM-091B	1 OF 1	B7	3	B	RECIRC	VARIABLE	C_DIFF_PRESS	24			
								C_FLOW	24	FULL		
								C_VIB_IN_HORZ	24		1	
								C_VIB_IN_VERT	24		1	
								C_VIB_OUT_AX	24		1	
								C_VIB_OUT_HORZ	24		1	
								C_VIB_OUT_VERT	24			

NORTH ANNA UNIT 2
FOURTH INSERVICE TESTING INTERVAL
PUMP INSERVICE TEST TABLE

PUMP NUMBER	DRAWING NUMBER	SHEET NO	COOR	ASME CLASS	ISTB GROUP	FLOW PATH	SYSTEM RESIST	TEST TYPE	TEST FREQ	REF FLOW STATUS	RELIEF REQUEST (P-)	NON-CODE ALTER (PNC-)
2-RS-P-3A	12050-CBM-091B	1 OF 1	B7	3	B	RECIRC	VARIABLE	DIFF_PRESSURE	03			
								FLOW	03	FULL		
	CASING COOLING VERTICAL CENTRIFUGAL PUMP											
2-RS-P-3B	12050-CBM-091B	1 OF 1	B6	3	B	RECIRC	VARIABLE	C_DIFF_PRESS	24			
								C_FLOW	24	FULL		
								C_VIB_IN_HORZ	24		1	
								C_VIB_IN_VERT	24		1	
								C_VIB_OUT_AX	24		1	
								C_VIB_OUT_HORZ	24		1	
								C_VIB_OUT_VERT	24			
								DIFF_PRESSURE	03			
								FLOW	03	FULL		
	CASING COOLING VERTICAL CENTRIFUGAL PUMP											
2-SI-P-1A	12050-CBM-096A	1 OF 3	C6	2	B	NORMAL	VARIABLE	C_DEV_HEAD	24			
								C_FLOW	24	FULL		
								C_VIB_UP_MTR_90	24			
								C_VIB_UP_MTR_AX	24		1	
								C_VIB_UP_MTR_IN	24			
						RECIRC	FIXED	DEV_HEAD	03			
								FLOW	03	Note 4		
	LOW HEAD SAFETY INJECTION VERTICAL LINE SHAFT PUMP											
2-SI-P-1B	12050-CBM-096A	1 OF 3	C4	2	B	NORMAL	VARIABLE	C_DEV_HEAD	24			
								C_FLOW	24	FULL		
								C_VIB_UP_MTR_90	24			
								C_VIB_UP_MTR_AX	24			
								C_VIB_UP_MTR_IN	24			
						RECIRC	FIXED	DEV_HEAD	03			
								FLOW	03	Note 4		

NORTH ANNA UNIT 2
FOURTH INSERVICE TESTING INTERVAL
PUMP INSERVICE TEST TABLE

PUMP NUMBER	DRAWING NUMBER	SHEET NO	COOR	ASME CLASS	ISTB GROUP	FLOW PATH	SYSTEM RESIST	TEST TYPE	TEST FREQ	REF FLOW STATUS	RELIEF REQUEST (P-)	NON-CODE ALTER (PNC-)
	LOW HEAD SAFETY INJECTION VERTICAL LINE SHAFT PUMP											
2-SW-P-1A	11715-CBM-078A	3 OF 5	D4	3	A	NORMAL	VARIABLE	C_DEV_HEAD	24			
								C_FLOW	24	FULL	3	
								C_VIB_UP_MTR_90	24			
								C_VIB_UP_MTR_AX	24		1	
								C_VIB_UP_MTR_IN	24			
								DEV_HEAD	03			
								FLOW	03	Note 5	3	
								VIB_UP_MTR_90	03		1	
								VIB_UP_MTR_AX	03		1	
								VIB_UP_MTR_IN	03		1	
	SERVICE WATER VERTICAL LINE SHAFT PUMP											
2-SW-P-1B	11715-CBM-078A	3 OF 5	D3	3	A	NORMAL	VARIABLE	C_DEV_HEAD	24			
								C_FLOW	24	FULL	3	
								C_VIB_UP_MTR_90	24			
								C_VIB_UP_MTR_AX	24		1	
								C_VIB_UP_MTR_IN	24			
								DEV_HEAD	03			
								FLOW	03	Note 5	3	
								VIB_UP_MTR_90	03			
								VIB_UP_MTR_AX	03		1	
								VIB_UP_MTR_IN	03			
	SERVICE WATER VERTICAL LINE SHAFT PUMP											

PUMP INSERVICE TEST TABLE NOTES

Note 1 - As described in Relief Request P-5, permanent flow instrumentation is not installed on the boric acid transfer system recirculation piping, which is the only test loop available to test pumps 1-CH-P-2C and D every three months. The alternative testing described in Relief Request P-5 will be followed.

Note 2 - The normal charging flow path is the only flow path available for Group A tests that are performed every three months for pumps 2-CH-P-1A, B and C. Flow within 20% of pump design flow cannot be achieved with this flow path.

Note 3 - As described in Relief Request P-6, a flow within 20% of pump design flow cannot be achieved with the only available test loop for outside recirculation spray pumps 2-RS-P-2A and B.

Note 4 - The low head safety injection recirculation flow path is the only flow path available for Group B tests that are performed every three months for pumps 2-SI-P-1A and B. Flow within 20% of pump design flow cannot be achieved with this flow path.

Note 5 - As described in Relief Request P-3, pumps 2-SW-P-1A and B are tested over a range of flows every three months. The lower end of this range is less than 20% of pump design flow. However, to minimize system perturbations, the range will not be changed to accommodate the 20% of design flow.

3.6 PUMP TEST PROGRAM RELIEF REQUESTS

Relief requests identify those ISTB Code requirements considered to be impractical or for which an alternative testing method is proposed. The basis for the relief request and the alternate testing to be performed is given.

RELIEF REQUEST P-1

Proposed alternative in accordance with 10CFR50.55a(a)(3)(i)
Alternative provides acceptable level of quality and safety.

1.0 ASME Code Components Affected

Refer to Table P-1

2.0 Applicable Code Edition and Addenda

ASME OM Code, 2004 Edition

3.0 Applicable Code Requirements

ISTB-3300, "Reference Values"

ISTB-3300(a) requires that initial reference values shall be determined from the results of testing meeting the requirements of ISTB-3100, "Preservice Testing," or from the results of the first inservice test.

ISTB-3300(d) requires that reference values shall be established at a point(s) of operation (reference point) readily duplicated during subsequent tests.

ISTB-3300(f) requires that all subsequent test results shall be compared to these initial reference values or to new reference values established in accordance with ISTB-3310, ISTB-3320, or ISTB-6200(c).

ISTB-5120, "Inservice Testing" (Centrifugal Pumps, Except Vertical Line Shaft Centrifugal Pumps)

ISTB-5121(e) and ISTB-5123(e), "Group A Test Procedure and Comprehensive Test Procedure", require that all deviations from the reference values shall be compared with the ranges of Table ISTB-5121-1 and corrective action taken as specified in ISTB-6200. Vibration measurements shall be compared to both the relative and absolute criteria shown in the alert and required action ranges of Table ISTB-5121-1. For example, if vibration exceeds either 6Vr, or 0.7 in/sec, the pump is in the required action range.

ISTB-5220, "Inservice Testing" (Vertical Line Shaft Centrifugal Pumps)

ISTB-5221(e) and ISTB-5223(e), "Group A Test Procedure and Comprehensive Test Procedure", require that all deviations from the reference values shall be compared with the ranges of Table ISTB-5221-1 and corrective action taken as specified in ISTB-6200. Vibration measurements shall be compared to both the relative and absolute criteria shown in the alert and required action ranges of Table ISTB-5221-1.

Note: There are no ASME Code Classed positive displacement pumps in the North Anna IST Program.

4.0 Reason for Request

The pump groups listed in Table P-1 tend to be smooth running pumps. There is at least one pump in each group with at least one vibration reference value (V_r) that is currently less than 0.05 inches per second (ips). Small values for V_r produce small acceptable ranges for pump operation. The acceptable ranges are defined in Tables ISTB-5121-1 and ISTB-5221-1 as less than or equal to $2.5V_r$. Based on a small acceptable range, a smooth running pump could be subject to unnecessary corrective action if the measured vibration parameter exceeds this acceptable range.

For very small reference values, hydraulic noise and instrument error can be a significant portion of the reading and affect the repeatability of subsequent measurements. Also, experience gathered from the North Anna preventive maintenance program has shown that changes in vibration levels in the range of 0.05 ips do not normally indicate significant degradation in pump performance.

To avoid unnecessary corrective action, a minimum value for V_r of 0.05 ips has been established for velocity measurements. This minimum value will be applied to individual vibration locations for the pumps listed in Table P-1 where the measured reference value is less than 0.05 ips.

When new reference values are established per ISTB-3310, ISTB-3320 or ISTB-6200(c), the measured parameters will be evaluated for each location to determine if the provisions of this relief request still apply.

In addition to the requirements of ISTB, the pumps in the ASME Inservice Testing Program are included in the North Anna Predictive Maintenance Program. The North Anna Predictive Maintenance Program currently employs predictive monitoring techniques such as:

- vibration monitoring and analysis beyond that required by ISTB,
- oil sampling and analysis where applicable (e.g., for pumps with sufficiently large oil reservoirs).

If the measured parameters are outside the normal operating range or are determined by analysis to be trending toward an unacceptable degraded state, appropriate actions are taken that may include:

- increased monitoring to establish rate of change,
- review of component specific information to identify cause, and
- removal of the pump from service to perform maintenance.

It should be noted that all of the pumps in the IST Program will remain in the Predictive Maintenance Program even if certain pumps have very low vibration readings and are considered to be smooth running pumps. This alternative to the requirements of ISTB-3300, ISTB-5120 and ISTB-5220, and Table ISTB-5121-1 and Table ISTB-5221-1 provides an acceptable level of quality and safety.

5.0 Proposed Alternative and Basis for Use

For the pumps listed in Table P-1, if a measured reference value is below 0.05 ips for a particular vibration measurement location, then subsequent test results for that location may be compared to an acceptable range based on 0.05 ips. In addition to the Code requirements, all pumps in the IST Program are included in and will remain in the North Anna Predictive Maintenance Program regardless of their smooth running status.

Using the provisions of this relief request as an alternative to the specific requirements of ISTB-3300, ISTB-5120 and ISTB-5220, and Table ISTB-5121-1 and Table ISTB-5221-1 will provide adequate indication of pump performance and continue to provide an acceptable level of quality and safety. Therefore, pursuant to 10CFR50.55a(a)(3)(i), Relief Request P-1 requests relief from the specific ISTB requirements identified in this request.

6.0 Duration of the Proposed Alternative

The proposed alternative described in Relief Request P-1 will be used for the North Anna Power Station Unit 2 Fourth Ten Year Inservice Testing Interval.

7.0 Precedents

A similar relief request for the North Anna Unit 2 Third Ten Year Inservice Testing Interval was approved by the NRC in their safety evaluation entitled "North Anna Power Station, Units Nos.1 and 2 Re: Inservice testing Program for Pumps and Valves, Third Ten Year Interval Update (TAC NOS. MB2221 and MB2222)" dated January 28, 2002.

The following relief requests for other plants that are similar to P-1 were approved by the NRC.

Pump Relief Request PRR8 for Beaver Valley 1 was approved by the NRC by letter dated 9/27/2007 (TAC NOS. MD5118 – MD5131).

Pump Relief Request PRR8 for Beaver Valley 2 was approved by the NRC by letter dated 2/14/2008 (TAC NOS. MD5595 – MD5604).

Note that Relief Request P-1 applies to all pumps within the groups listed in Table P-1. Pumps 2-CH-P-1A and 1C, 2-FW-P-3B, 2-HV-P-20C and 2-SI-P-1B do not currently have a measured reference value below 0.05 ips for a particular vibration measurement location but are included in the relief request scope. Treating the pumps as groups is a departure from the scope in the Beaver Valley relief requests.

8.0 References

1. ASME OM Code, 2004 Edition

Table P-1

Pump Number	System	Code Class	OM Group	Description	Pump Type	Pump Speed (rpm)
1-CH-P-2C 1-CH-P-2D	Chemical and Volume Control	2	A	Boric Acid Transfer Pumps	Centrifugal	3500
2-CC-P-1A 2-CC-P-1B	Component Cooling	3	A	Component Cooling Water Pumps	Centrifugal	1170
2-CH-P-1A 2-CH-P-1B 2-CH-P-1C	Safety Injection/ Chemical and Volume Control	2	A	High Head Safety Injection/Charging Pump	Centrifugal	4820
2-FW-P-3A 2-FW-P-3B	Feedwater	3	B	Motor Driven Auxiliary Feedwater Pumps	Centrifugal	3560
2-HV-P-20A 2-HV-P-20B 2-HV-P-20C	Heating and Ventilation	3	A	Control and Relay Room Chilled Water Pumps	Centrifugal	3560
2-HV-P-22A 2-HV-P-22B 2-HV-P-22C	Heating and Ventilation	3	A	Control and Relay Room Condenser Water Pumps	Centrifugal	1760
2-RH-P-1A 2-RH-P-1B	Residual Heat Removal	2	A	Residual Heat Removal Pumps	Centrifugal	1780
2-RS-P-3A 2-RS-P-3B	Recirculation Spray	3	B	Casing Cooling Pump	Centrifugal	1780
2-SI-P-1A 2-SI-P-1B	Safety Injection	2	B	Low Head Safety Injection Pump	Vertical Line Shaft	1770
2-SW-P-1A 2-SW-P-1B	Service Water	3	A	Main Service Water Pump	Centrifugal	1180

RELIEF REQUEST P-2

Proposed alternative in accordance with 50.55a(f)(6)(i) and 10CFR50.55a(a)(3)(i) Code requirement is impractical and the alternative provides acceptable level of quality and safety.

1.0 ASME Code Components Affected

Pump(s): 2-RH-P-1A
2-RH-P-1B

System: Residual Heat Removal

Group: A

Class: 2

Function: The residual heat removal pumps remove decay heat from the reactor core and the reactor coolant system during plant cool down.

2.0 Applicable Code Edition and Addenda

ASME OM Code, 2004 Edition

3.0 Applicable Code Requirements

ISTB-3400, "Frequency of Inservice Tests," states: "An inservice test shall be run on each pump as specified in Table ISTB-3400-1."

Table ISTB-3400-1, "Inservice Test Frequency," requires an inservice test be run on each Group A pump nominally every 3 months.

ISTB-5121 requires that Group A tests be conducted with the pump operating at a specified reference point. In addition, ISTB-5121(b) states that, "The resistance of the system shall be varied until the flow rate equals the reference point. The differential pressure shall then be determined and compared to its reference value. Alternatively, the flow rate shall be varied until the differential pressure equals the reference point and the flow rate determined and compared to the reference flow rate value."

ISTB-5123 requires that comprehensive tests be conducted with the pump operating at a specified reference point. In addition, ISTB-5123(b) states that "For centrifugal and vertical line shaft pumps, the resistance of the system shall be varied until the flow rate equals the reference point. The differential pressure shall then be determined and compared to its reference value. Alternatively, the flow rate shall be varied until the differential pressure equals the reference point and the flow rate determined and compared to the reference flow rate value."

4.0 Reason for Request

ISTB-3400 and Table ISTB-3400-1

The residual heat removal pumps are located inside containment and are low pressure (600 psig design pressure) pumps that take suction from and discharge to the reactor coolant system (RCS). The RCS is maintained at 2235 psig and the containment atmosphere is maintained at sub-atmospheric pressure during normal operation. The RHR system is considered to be a low pressure system that could be damaged if exposed to the normal operating RCS pressure of approximately 2235 psig. Therefore, to ensure system integrity or prevent system overpressurization/damage, the Technical Requirements Manual requires that the RHR subsystem be isolated from the RCS prior to the RCS exceeding 500 psig by closing and de-energizing both remote operated RHR suction isolation valves and locking the associated breakers open.

Therefore, testing the residual heat removal pumps during normal operation is considered impractical.

ISTB-5121 and ISTB-5123

As a result of industry experience and NRC guidance (Generic Letter 88-17) concerning the loss of decay heat removal capability, North Anna Power Station practices a policy of minimizing perturbations to RHR pump flow and system configuration when decay heat must be removed during hot shutdowns, cold shutdowns and reactor refueling outages.

Therefore, to permit RHR pump testing during cold shutdown and reactor refueling outage testing without significant system perturbations, the RHR pumps will be tested in a range of flows, and the results will be compared to acceptance criteria based on a portion of the pump curve and the hydraulic acceptance criteria given in ISTB. The guidelines set forth in Code Case OMN-16, "Use of a Pump Curve for Testing," will be followed.

Past vibration data for the subject pumps have been reviewed and it has been determined that pump vibration does not vary significantly with flow rate over the range of the test flow rates. This alternative to the requirements of ISTB-5121 and ISTB-5123 provides an acceptable level of quality and safety.

5.0 Proposed Alternative and Bases for Use

ISTB-3400 and Table ISTB-3400-1

These pumps will be tested every cold shutdown outage and reactor refueling outage but not more frequently than once every three months.

Using the provisions of this relief request as an alternative to the specific requirements of ISTB-3400 and Table ISTB-3400-1 identified above, which have been identified to be impractical, will provide adequate indication of pump performance. Therefore, pursuant to 10 CFR 50.55a(f)(6)(i), Relief Request P-2 requests relief from the specific ISTB Code requirements identified in this relief request.

ISTB-5121 and ISTB-5123

Acceptance criteria will be based on a portion of the pump curve and not on discreet reference values. The guidelines set forth in Code Case OMN-16 will be followed.

Using the provisions of this relief request as an alternative to the specific requirements of ISTB-5121 and ISTB-5123 identified above will provide adequate indication of pump performance and continue to provide an acceptable level of quality and safety. Therefore, pursuant to 10 CFR 50.55a(a)(3)(i), Relief Request P-2 requests relief from the specific ISTB Code requirements identified in this relief request.

6.0 Duration of the Proposed Alternative

The proposed alternative described in Relief Request P-2 will be used for the North Anna Power Station Unit 2 Fourth Ten Year Inservice Testing Interval.

7.0 Precedents

A similar relief request was approved by the NRC in their safety evaluation entitled "North Anna Power Station, Units Nos.1 and 2 Re: Inservice testing Program for Pumps and Valves, Third Ten Year Interval Update (TAC Nos. MB2221 and MB2222)" dated January 28, 2002. The pump curve portion of this relief request was based on OMN-9 "Use of a Pump Curve for Testing" and the conditions identified in Regulatory Guide 1.192, Operation and Maintenance Code Case Acceptability, ASME OM Code. OMN-16 incorporates the conditions identified in Regulatory Guide 1.192.

The following relief requests for another plant that are similar to portions of P-2 were approved by the NRC.

Pump Relief Request PRR7 for Beaver Valley 1 was approved by the NRC by letter dated 9/27/2007 (TAC NOS. MD5118 – MD5131) and applies to ISTB-3400 and Table ISTB-3400-1.

Pump Relief Request PRR3 for Beaver Valley 1 was approved by the NRC by letter dated 9/27/2007 (TAC NOS. MD5118 – MD5131) and applies to ISTB-5121 and ISTB-5123. PRR4 references NUREG-1482, Section 5.2.2, "Reference Curves.," which gives guidance based on OMN-9 and the conditions in Regulatory Guide 1.192. OMN-16 incorporates the conditions identified in Regulatory Guide 1.192.

8.0 References

1. ASME OM Code, 2004 Edition

RELIEF REQUEST P-3

Proposed alternative in accordance with 10CFR50.55a(a)(3)(i)
Alternative provides acceptable level of quality and safety.

1.0 ASME Code Components Affected

Pump(s): 2-SW-P-1A
2-SW-P-1B

System: Service Water

Group: A

Class: 3

Function: The service water pumps supply cooling water to the component cooling and recirculation spray heat exchangers as well as other safety related components.

2.0 Applicable Code Edition and Addenda

ASME OM Code, 2004 Edition

3.0 Applicable Code Requirements

ISTB-5121 requires that Group A tests be conducted with the pump operating at a specified reference point. ISTB-5121(b) states that, "The resistance of the system shall be varied until the flow rate equals the reference point. The differential pressure shall then be determined and compared to its reference value. Alternatively, the flow rate shall be varied until the differential pressure equals the reference point and the flow rate determined and compared to the reference flow rate value."

ISTB-5123 requires that comprehensive tests be conducted with the pump operating at a specified reference point. ISTB-5123(b) states that "For centrifugal and vertical line shaft pumps, the resistance of the system shall be varied until the flow rate equals the reference point. The differential pressure shall then be determined and compared to its reference value. Alternatively, the flow rate shall be varied until the differential pressure equals the reference point and the flow rate determined and compared to the reference flow rate value."

4.0 Reason for Request

Plant conditions may not be the same as when the reference values were established. The SW system is dependent on seasonal water temperatures and flow may vary significantly from the cool winter months to the warm summer months. Many reference points must be established to anticipate varying plant conditions. In the service water system, reproducing one of these reference flow points is not practical with the large butterfly valves installed and it may not be desirable to alter cooling because of other plant operating parameters.

Therefore, pumps will be tested in a range of flows and the results will be compared to acceptance criteria based on a portion of the pump curve and the hydraulic acceptance criteria given in ISTB.

Past vibration data for the subject pumps have been reviewed and it has been determined that pump vibration does not vary significantly with flow rate over the range of the test flow rates. This alternative to the requirements of ISTB-5121 and ISTB-5123 provides an acceptable level of quality and safety.

5.0 Proposed Alternative and Bases for Use

Acceptance criteria will be based on a portion of the pump curve and not on discreet reference values. The guidelines set forth in Code Case OMN-16, "Use of a Pump Curve for Testing," will be followed.

Using the provisions of this relief request as an alternative to the specific requirements of ISTB-5121 and ISTB-5123 identified above will provide adequate indication of pump performance and continue to provide an acceptable level of quality and safety. Therefore, pursuant to 10 CFR 50.55a(a)(3)(i), Relief Request P-3 requests relief from the specific ISTB Code requirements identified in this relief request.

6.0 Duration of the Proposed Alternative

The proposed alternative described in Relief Request P-3 will be used for the North Anna Power Station Unit 2 Fourth Ten Year Inservice Testing Interval.

7.0 Precedents

A similar relief request for the North Anna Unit 2 Third Ten Year Inservice Testing Interval was approved by the NRC in their safety evaluation entitled "North Anna Power Station, Units Nos.1 and 2 (North Anna 1 and 2) – Relief Requests P-3 and P-4 (TAC Nos. MC6663, MC6664, MC6665, and MC6666)" dated April 11, 2006. The relief request was based on OMN-9 "Use of a Pump Curve for Testing" and the conditions identified in Regulatory Guide 1.192, Operation and Maintenance Code Case Acceptability, ASME OM Code. OMN-16 incorporates the conditions identified in Regulatory Guide 1.192.

The following relief request for another plant that is similar to P-3 was approved by the NRC.

Pump Relief Request PRR4 for Beaver Valley 2 was approved by the NRC by letter dated 2/14/2008 (TAC NOS. MD5595 – MD5604). PRR4 references NUREG-1482, Section 5.2.2, "Reference Curves.," which gives guidance based on OMN-9 and the conditions in Regulatory Guide 1.192. OMN-16 incorporates the conditions identified in Regulatory Guide 1.192.

8.0 References

1. ASME OM Code, 2004 Edition

RELIEF REQUEST P-4

Proposed alternative in accordance with 10CFR50.55a(a)(3)(i)
Alternative provides acceptable level of quality and safety.

1.0 ASME Code Components Affected

Pump(s): 2-CC-P-1A
2-CC-P-1B

System: Component Cooling

Group: A

Class: 3

Function: The component cooling pumps supply cooling water to the component cooling heat exchangers, which remove heat from systems containing radioactive fluids.

2.0 Applicable Code Edition and Addenda

ASME OM Code, 2004 Edition

3.0 Applicable Code Requirements

ISTB-5121 requires that Group A tests be conducted with the pump operating at a specified reference point. ISTB-5121(b) states that, "The resistance of the system shall be varied until the flow rate equals the reference point. The differential pressure shall then be determined and compared to its reference value. Alternatively, the flow rate shall be varied until the differential pressure equals the reference point and the flow rate determined and compared to the reference flow rate value."

ISTB-5123 requires that comprehensive tests be conducted with the pump operating at a specified reference point. ISTB-5123(b) states that "For centrifugal and vertical line shaft pumps, the resistance of the system shall be varied until the flow rate equals the reference point. The differential pressure shall then be determined and compared to its reference value. Alternatively, the flow rate shall be varied until the differential pressure equals the reference point and the flow rate determined and compared to the reference flow rate value."

4.0 Reason for Request

Plant conditions may not be the same as when the reference values were established. Many reference points must be established to anticipate varying plant conditions. In the component cooling system, reproducing one of these reference flow points is difficult with the large butterfly valves installed and it may not be desirable to alter cooling because of other plant operating parameters. Therefore, pumps will be tested in a range of flows and the results will be compared to acceptance criteria based on a portion of the pump curve and the hydraulic acceptance criteria given in ISTB.

Past vibration data for the subject pumps have been reviewed and it has been determined that pump vibration does not vary significantly with flow rate over the range of the test flow rates. This alternative to the requirements of ISTB-5121 and ISTB-5123 provides an acceptable level of quality and safety.

5.0 Proposed Alternative and Bases for Use

Acceptance criteria will be based on a portion of the pump curve and not on discreet reference values. The guidelines set forth in Code Case OMN-16, "Use of a Pump Curve for Testing," will be followed.

Using the provisions of this relief request as an alternative to the specific requirements of ISTB-5121 and ISTB-5123 identified above will provide adequate indication of pump performance and continue to provide an acceptable level of quality and safety. Therefore, pursuant to 10 CFR 50.55a(a)(3)(i), Relief Request P-4 requests relief from the specific ISTB Code requirements identified in this relief request.

6.0 Duration of the Proposed Alternative

The proposed alternative described in Relief Request P-4 will be used for the North Anna Power Station Unit 2 Fourth Ten Year Inservice Testing Interval.

7.0 Precedents

A similar relief request for the North Anna Unit 2 Third Ten Year Inservice Testing Interval was approved by the NRC in their safety evaluation entitled "North Anna Power Station, Units Nos.1 and 2 (North Anna 1 and 2) – Relief Requests P-3 and P-4 (TAC Nos. MC6663, MC6664, MC6665, and MC6666)" dated April 11, 2006. The relief request was based on OMN-9 "Use of a Pump Curve for Testing" and the conditions identified in Regulatory Guide 1.192, Operation and Maintenance Code Case Acceptability, ASME OM Code. OMN-16 incorporates the conditions identified in Regulatory Guide 1.192.

The following relief request for another plant that is similar to P-4 was approved by the NRC.

Pump Relief Request PRR3 for Beaver Valley 1 was approved by the NRC by letter dated 9/27/2007 (TAC NOS. MD5118 – MD5131). PRR3 references NUREG-1482, Section 5.2.2, "Reference Curves.," which gives guidance based on OMN-9 and the conditions in Regulatory Guide 1.192. OMN-16 incorporates the conditions identified in Regulatory Guide 1.192.

8.0 References

1. ASME OM Code, 2004 Edition

RELIEF REQUEST P-5

Proposed alternative in accordance with 10 CFR 50.55a(f)(6)(i)
Alternative provides acceptable level of quality and safety.

1.0 ASME Code Components Affected

Pump(s): 1-CH-P-2C
1-CH-P-2D

System: Chemical and Volume Control

Group: A

Class: 2

Function: The boric acid transfer pumps supply boric acid to the suction of the charging pumps for emergency boration. During normal operation they recirculate the contents of the boron injection tank and the boric acid storage tanks.

2.0 Applicable Code Edition and Addenda

ASME OM Code, 2004 Edition

3.0 Applicable Code Requirements

Table ISTB-3000-1 requires that flow rate be measured during a Group A test.

Table ISTB-3400-1 requires that a Group A inservice test be run on each pump nominally every 3 months.

ISTB-5121 requires that Group A tests be conducted with the pump operating at a specified reference point. ISTB-5121(b) states that, "The resistance of the system shall be varied until the flow rate equals the reference point. The differential pressure shall then be determined and compared to its reference value. Alternatively, the flow rate shall be varied until the differential pressure equals the reference point and the flow rate determined and compared to the reference flow rate value."

4.0 Reason for Request

Permanent flow instrumentation is not installed on the recirculation piping, which is the only test loop available for quarterly testing. To measure flow, flow must be established to the charging pump suction lines. This flow would increase the reactor coolant system (RCS) boron inventory and cause a reactivity transient during normal operation.

The pump test requires an extended period of boric acid injection which should only be performed when borating the reactor in preparation for refueling when the boron concentration is low. The test cannot be conducted during mid-cycle cold shutdowns because the boron concentration in the RCS too high. The potential for over boration under these conditions could delay the ability of the plant to restart, due to the time required to dilute the excess boron in preparation for startup. Therefore, testing the boric acid transfer pumps to the requirements of Table ISTB-3000-1, Table ISTB-3400-1 and ISTB-5121 is not considered practical.

5.0 Proposed Alternative and Bases for Use

These pumps will be tested every quarter on the recirculation loop, and differential pressure and vibration will be measured. Every reactor refueling, a comprehensive test measuring differential pressure, flow rate and vibration will be performed.

The removal of quarterly flow testing of these pumps has been deemed acceptable per NRC Generic Letter 89-04, Position 9, which allows elimination of minimum flow test line flow rate measurements providing inservice tests are performed during cold shutdowns or refueling periods under full or substantial flow conditions where pump flow rate is recorded and evaluated. The proposed alternate testing is consistent with this philosophy and the intent of Position 9.

Using the provisions of this relief request as an alternative to the specific requirements of ISTB-3000-1, Table ISTB-3400-1 and ISTB-5121 identified above, which have been identified to be impractical, will provide adequate indication of pump performance. Therefore, pursuant to 10 CFR 50.55a(f)(6)(i), Relief Request P-5 requests relief from the specific ISTB Code requirements identified in this relief request.

6.0 Duration of the Proposed Alternative

The proposed alternative described in Relief Request P-5 will be used for the North Anna Power Station Unit 2 Fourth Ten Year Inservice Testing Interval.

7.0 Precedents

A similar relief request for the North Anna Unit 2 Third Ten Year Inservice Testing Interval was approved by the NRC in their safety evaluation entitled "North Anna Power Station, Units Nos.1 and 2 Re: Inservice testing Program for Pumps and Valves, Third Ten Year Interval Update (TAC Nos. MB2221 and MB2222)" dated January 28, 2002.

The following relief requests for other plants that are similar to P-5 were approved by the NRC.

Pump Relief Request PR-06 for St. Lucie Units 1 and 2 was approved by the NRC by letter dated 9/25/2008 (TAC NOS. MD7741 through MD7752).

Pump Relief Request RR-P-2 for Farley Units 1 and 2 was approved by the NRC by letter dated 8/06/2008 (TAC NOS. MD8746 through MD8753).

8.0 References

1. ASME OM Code, 2004 Edition

RELIEF REQUEST P-6

Proposed alternative in accordance with 10 CFR 50.55a(f)(6)(i)
Alternative provides acceptable level of quality and safety.

1.0 ASME Code Components Affected

Pump(s): 2-RS-P-2A
2-RS-P-2B

System: Recirculation Spray

Group: B

Class: 2

Function: The outside recirculation spray pumps supply borated spray to cool and depressurize the containment atmosphere following a containment depressurization actuation signal and maintain containment subatmospheric following an accident.

2.0 Applicable Code Edition and Addenda

ASME OM Code, 2004 Edition

3.0 Applicable Code Requirements

ISTB-3300(e)(1) (Reference Values) requires that reference values shall be established within ±20% of pump design flow rate for comprehensive tests.

ISTB-3100, "Preservice Testing," ISTB-3100(b) requires preservice testing of vertical line shaft pumps to be performed in accordance with ISTB-5210, "Preservice Testing." ISTB-5210(a) states that in systems where resistance can be varied, flow rate and differential pressure shall be measured at a minimum of 5 points. If practicable, these points shall be from pump minimum flow to at least pump design flow. A pump curve shall be established based on the measured points. At least one point(s) shall be designated as the reference point(s).

4.0 Reason for Request

ISTB-3300(e)(1)

The test loop for the outside recirculation pumps consists of a 10" pump discharge line feeding into a 4" recirculation line which feeds back to the pump sump. Refer to Figure P-6.1. The LOCA containment analysis assumes that the outside recirculation spray pumps deliver 3350 gpm. The LOCA containment analysis flow rate of 3350 gpm will be used as the pump design flow. With the 4" recirculation line as the test loop, the pump design flow rate of 3350 gpm cannot be achieved. To be within 20% of the pump design flow rate requires a reference flow of 2680 gpm. A flow rate of approximately 1450 gpm can be established in the test loop, which is within 57% of the pump safety analysis flow rate but not within 20% as required by ISTB-3300(e)(1).

Flow cannot be established in the existing discharge piping because the flow would be directed to the spray headers inside containment, which would spray water throughout the containment. Also, the discharge piping was not designed to be temporarily reconfigured so that pump design flow could be achieved.

The outside recirculation spray pumps for Unit 2 were subject to long term full flow testing in 1979, during the construction phase. A test loop was established by replacing the spray nozzles from each of the two spray headers (150 nozzles for each header) with plugs, discharging pump flow to the spray headers and directing the flow back to the containment sump. A dike was constructed around the containment sump to simulate water levels in containment that are expected during an accident. The outside recirculation spray pumps took suction from the sump, thus, completing the loop. Re-establishing this full flow test loop for the purpose of periodic testing would require plant modifications and is not practicable.

The spray headers are inaccessible without a significant amount of scaffolding. Even if the nozzles were accessible, the plugging of 300 spray nozzles, running the full flow test and returning the system to its operable configuration present substantial challenges in terms of complexity of the temporary modifications, labor intensive nature of the modifications, and controls and post modification testing needed to ensure that the system is returned to the original configuration.

ISTB-3100 and ISTB-5210(a)

As stated in ISTB-5210(a), "If practicable, these points shall be from pump minimum flow to at least pump design flow." With the restrictions described above, the highest flow rate that can be measured while maintaining stable test conditions is approximately 1450 gpm or within 57% of the pump design flow rate, which is less than the pump design flow. All data points for the preservice test pump curve must be at or below 1450 gpm.

5.0 Proposed Alternative and Bases for Use

ISTB-3300(e)(1)

As an alternative to testing within 20% of the pump design flow rate, the reference values will be established at approximately 1450 gpm or within 57% of the design flow. It is our understanding that testing at design flow is important for pumps with characteristic head-flow curves that are flat or gently sloping in the low flow region (little change in developed head with increasing flow). In the low flow region, increasing internal flows, usually due to wear, are difficult if not impossible to detect. Pumps with the "flat" curves at low flows should be tested at or near pump design flow to determine if increasing internal recirculation flows have degraded pump performance to the point where accident requirements cannot be met. This situation does not apply to the outside recirculation pumps if they are tested at 57% of design flow. Testing at the reference flow rate will detect pump degradation because the pump curve is well sloped at the point of testing. Refer to Figure P-6.2.

In addition to the requirements of ISTB, the outside recirculation pumps in the ASME Inservice Testing Program are included in the North Anna Predictive Maintenance Program. The North Anna Predictive Maintenance Program currently employs predictive monitoring techniques such as:

- vibration monitoring and analysis beyond that required by ISTB,
- oil sampling and analysis where applicable (e.g., for pumps with sufficiently large oil reservoirs).

If the measured parameters are outside the normal operating range or are determined by analysis to be trending toward an unacceptable degraded state, appropriate actions are taken that may include:

- increased monitoring to establish rate of change,
- review of component specific information to identify cause, and
- removal of the pump from service to perform maintenance.

Using the provisions of this relief request as an alternative to the specific requirements of Table ISTB-3000-1 and Table ISTB-3400-1 identified above, which have been identified to be impractical, will provide adequate indication of pump performance. Therefore, pursuant to 10 CFR 50.55a(f)(6)(i), Relief Request P-6 requests relief from the specific ISTB Code requirements identified in this relief request.

ISTB-3100 and ISTB-5210(a)

The five data points for the preservice test pump curve will be measured at points at or below 1450 gpm. Should a preservice or baseline curve be required, the manufacturers curve would be used in conjunction with the pump minimum operating point curves and the points obtained would be reconciled to the manufacturers curve to provide assurance of acceptable pump operation.

6.0 Duration of the Proposed Alternative

The proposed alternatives described in Relief Request P-6 will be used for the North Anna Power Station Unit 2 Fourth Ten Year Inservice Testing Interval.

7.0 Precedents

A similar relief request for the North Anna Unit 2 Third Ten Year Inservice Testing Interval was approved by the NRC in their safety evaluation entitled "North Anna Power Station, Units Nos.1 and 2 Re: Inservice testing Program for Pumps and Valves, Third Ten Year Interval Update (TAC Nos. MB2221 and MB2222)" dated January 28, 2002.

The following relief request for another plant that is similar to P-6 was approved by the NRC.

Pump Relief Request PRR11 for Beaver Valley 1 was approved by the NRC by letter dated 9/27/2007 (TAC NOS. MD5118 – MD5131).

8.0 References

1. ASME OM Code, 2004 Edition

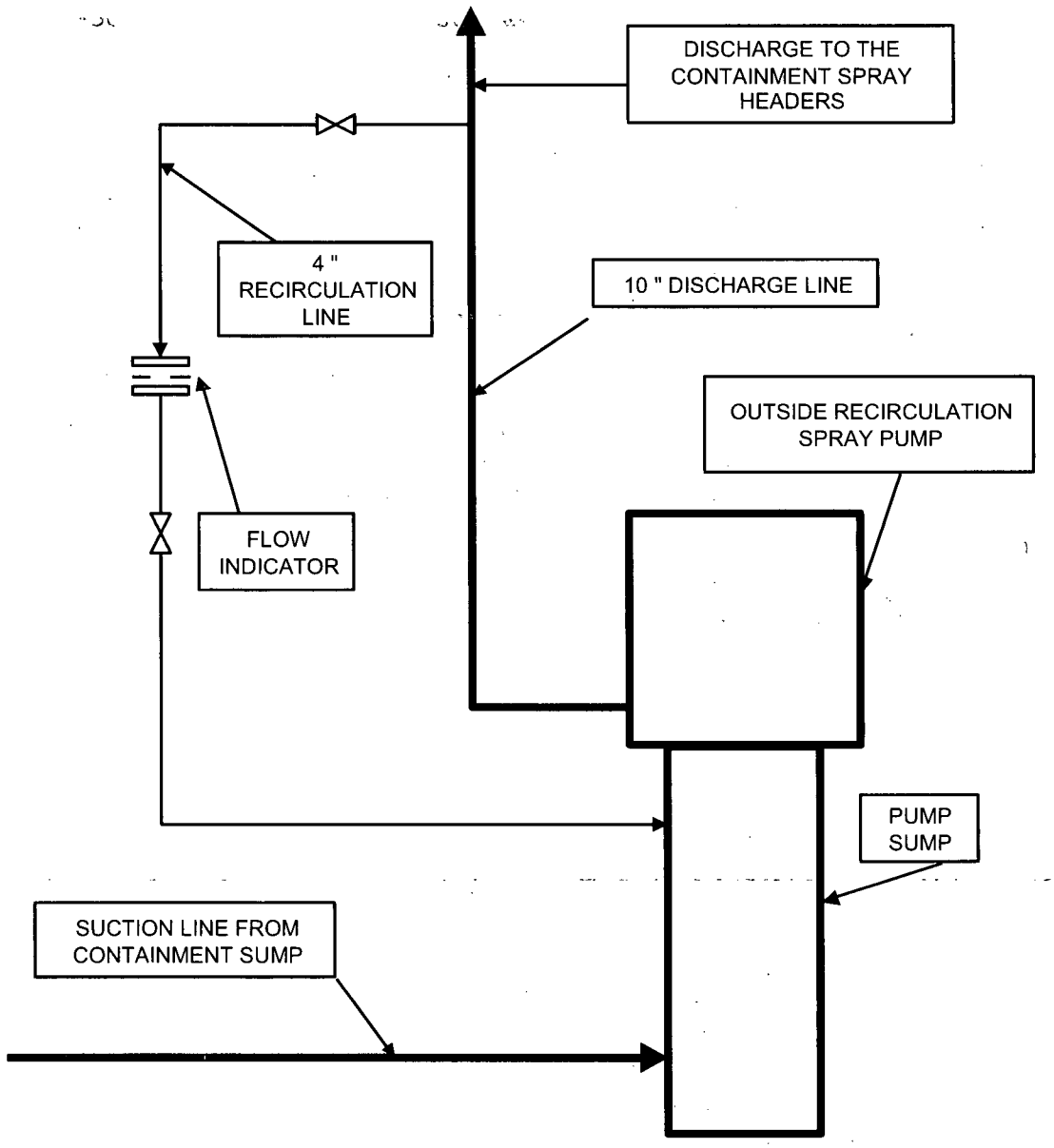
DISCHARGE TO THE CONTAINMENT SPRAY HEADERS
4 " RECIRCULATION LINE
10 " DISCHARGE LINE
OUTSIDE RECIRCULATION SPRAY PUMP
FLOW INDICATOR
PUMP SUMP
SUCTION LINE FROM CONTAINMENT SUMP

FIGURE P-6.1

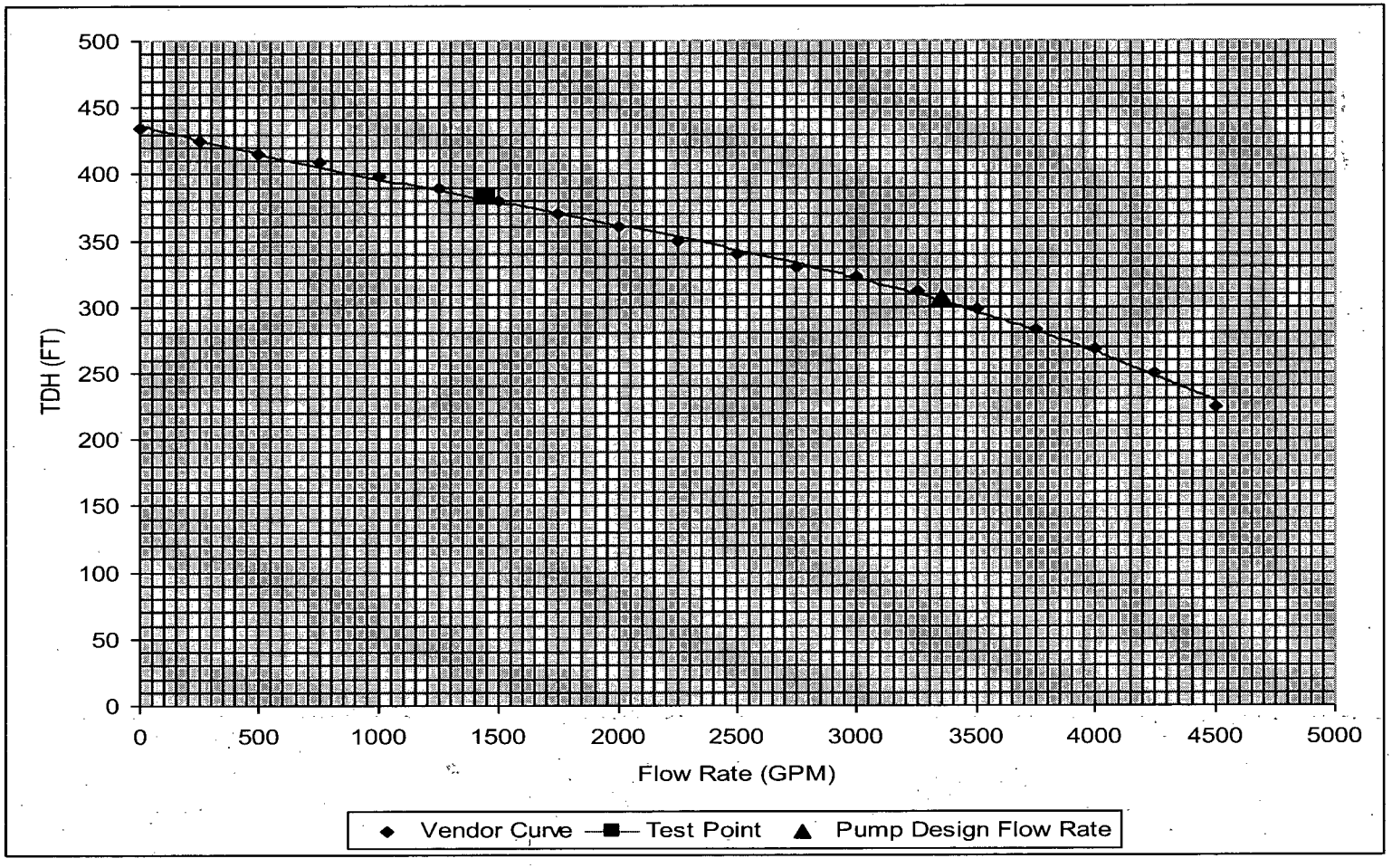
500
450
400
350
300
250
200
150
100
50
0
TDH (FT)
0
500
1000
1500
2000
2500
3000
3500
4000
4500
5000
Flow Rate (GPM)
Vendor Curve
Test Point
Pump Design Flow Rate

FIGURE P-6.2

RELIEF REQUEST P-7

Proposed alternative in accordance with 10CFR50.55a(a)(3)(i)
Alternative provides acceptable level of quality and safety.

1.0 ASME Code Components Affected

Various digital instruments used for IST of pumps.

2.0 Applicable Code Edition and Addenda

ASME OM Code, 2004 Edition

3.0 Applicable Code Requirements

ISTB-3510(b)(2), "Digital instruments shall be selected such that the reference value does not exceed 70% of the calibrated range of the instrument."

4.0 Reason for Request

Code Case OMN-6 allows the use of digital instruments where the reference value does not exceed 90% of the calibrated range of the instrument. Code Case OMN-6 applies to the 1990 Edition through the 1997 Addenda. North Anna is subject to the requirements of the ASME OM Code, 2004 Edition during the Fourth Inservice Testing Interval.

Using the provisions of this relief request as an alternative to the specific requirements of ISTB-3510(b)(2) identified above will provide adequate indication of pump performance and continue to provide an acceptable level of quality and safety. Therefore, pursuant to 10 CFR 50.55a(a)(3)(i) we request relief from the specific ISTB Code requirements identified in this relief request.

5.0 Proposed Alternative and Bases for Use

By using Code Case OMN-6, greater flexibility in the selection of instruments would be achieved, thus preventing the installation of multiple instruments to monitor the same parameter during testing. Digital instruments will be selected such that the reference value does not exceed 90% of the calibrated range of the instrument.

NUREG-1482, Revision 1, Section 5.5 states that....."The NRC has accepted Code Case OMN-6 as specified in Reg Guide 1.192, which allows each digital instrument to be such that the reference values do not exceed 90 percent of the calibrated range of the instrument."

Use of Code Case OMN-6, approved by the NRC in Reg Guide 1.192, will provide at least equivalent instrumentation accuracy requirements for the required pump testing parameters to be measured in the IST program and will provide results consistent with code requirements. This will provide adequate assurance of acceptable pump performance.

Using the provisions of this relief request as an alternative to the specific requirements of ISTB- 3510(b)(2) identified above will provide adequate indication of pump performance and continue to provide an acceptable level of quality and safety. Therefore, pursuant to 10 CFR 50.55a(a)(3)(i), Relief Request P-7 requests relief from the specific ISTB requirements identified in this request.

This alternative provides an acceptable level of quality and safety.

6.0 Duration of the Proposed Alternative

The proposed alternative described in Relief Request P-7 will be used for the North Anna Power Station Unit 2 Fourth Ten Year Inservice Testing Interval.

7.0 Precedents

The following relief requests for other plants that are similar to P-7 were approved by the NRC.

Pump Relief Request P-002 for Millstone 2 and P-003 for Millstone 3 were approved by the NRC by letter dated 10/24/2008 (TAC NOS. MD7763 through MD7771).

RP07 was previously approved for Columbia Generating Station on March 23, 2007 (TAC Nos.MD3537, MD3538, MD3539, MD3541, MD3542, MD3550, MD3551 and MD3552)

8.0 References

1. ASME OM Code, 2004 Edition

RELIEF REQUEST P-8

Proposed alternative in accordance with 10CFR50.55a(a)(3)(i)
Alternative provides acceptable level of quality and safety.

1.0 ASME Code Components Affected

Pump(s): 2-CH-P-1A
2-CH-P-1B
2-CH-P-1C

System: Chemical and Volume Control

Group: A

Class: 2

Function: These centrifugal pumps supply high pressure borated water to the reactor coolant system following a safety injection signal, and to provide normal charging to the reactor coolant system.

2.0 Applicable Code Edition and Addenda

ASME OM Code, 2004 Edition

3.0 Applicable Code Requirements

ISTB-5121(b) states that, "The resistance of the system shall be varied until the flow rate equals the reference point. The differential pressure shall then be determined and compared to its reference value. Alternatively, the flow rate shall be varied until the differential pressure equals the reference point and the flow rate determined and compared to the reference flow rate value."

ISTB-5123(b) states that "For centrifugal and vertical line shaft pumps, the resistance of the system shall be varied until the flow rate equals the reference point. The differential pressure shall then be determined and compared to its reference value. Alternatively, the flow rate shall be varied until the differential pressure equals the reference point and the flow rate determined and compared to the reference flow rate value."

4.0 Reason for Request (ISTB-5121(b) and ISTB-5123(b))

Plant conditions may not be the same as when the reference values were established. In the Chemical and Volume Control System, charging system flow must be balanced with seal injection, letdown and seal return flows to maintain a constant pressurizer level and pressure. Adjusting the charging flow rate to a specific reference test flow rate and then returning the charging system to the original flow rate places an unnecessary transient on the charging system and causes undesirable perturbations within the Reactor Coolant System.

Therefore, pumps will be tested in a range of flows and the results will be compared to acceptance criteria based a portion of the pump curve and the hydraulic acceptance criteria given in ISTB.

Past vibration data for the subject pumps have been reviewed and it has been determined that pump vibration does not vary significantly with flow rate over the range of the test flow rates. This alternative to the requirements of ISTB-5121(b) and ISTB-5123(b) provides an acceptable level of quality and safety.

5.0 Proposed Alternative and Bases for Use

Acceptance criteria will be based on a portion of the pump curve and not on discreet reference values. The guidelines set forth in Code Case OMN-16, "Use of a Pump Curve for Testing," will be followed.

Using the provisions of this relief request as an alternative to the specific requirements of ISTB-5121(b) and ISTB-5123(b) identified above will provide adequate indication of pump performance and continue to provide an acceptable level of quality and safety. Therefore, pursuant to 10 CFR 50.55a(a)(3)(i), Relief Request P-8 requests relief from the specific ISTB Code requirements identified in this relief request.

6.0 Duration of the Proposed Alternative

The proposed alternative described in Relief Request P-8 will be used for the North Anna Power Station Unit 2 Fourth Ten Year Inservice Testing Interval.

7.0 Precedents

A similar relief request for the North Anna Unit 2 Third Ten Year Inservice Testing Interval was approved by the NRC in their safety evaluation entitled "North Anna Power Station, Units Nos.1 and 2 (North Anna 1 and 2) – Relief Requests P-3 and P-4 (TAC Nos. MC6663, MC6664, MC6665, and MC6666)" dated April 11, 2006. The relief request was based on OMN-9 "Use of a Pump Curve for Testing" and the conditions identified in Regulatory Guide 1.192, Operation and Maintenance Code Case Acceptability, ASME OM Code. OMN-16 incorporates the conditions identified in Regulatory Guide 1.192.

The following relief request for another plant that is similar to P-8 in the use of a pump curve was approved by the NRC.

Pump Relief Request PRR3 for Beaver Valley 1 was approved by the NRC by letter dated 9/27/2007 (TAC NOS. MD5118 – MD5131). PRR3 references NUREG-1482, Section 5.2.2, "Reference Curves.," which gives guidance based on OMN-9 and the conditions in Regulatory Guide 1.192. OMN-16 incorporates the conditions identified in Regulatory Guide 1.192.

These relief requests are similar to P-8 in that they use a portion of the pump curve instead of a reference point. However, the plant systems and conditions for not using a reference point differ.

8.0 References

1. ASME OM Code, 2004 Edition

3.7 ALTERNATIVE TESTING FOR NON-CODE PUMPS

According to the Minutes of the Public Meeting on Generic Letter 89-04, "Paragraph (g) of 10CFR 50.55a requires the use of Section XI of the ASME Code for inservice testing of components covered by the Code. For other components important to safety, the licensee also has the burden of demonstrating their continued operability." The minutes go on to state that, "The Code-required IST program is a reasonable vehicle to provide a periodic demonstration of the operability of pumps and valves not covered by the Code. If non-Code components are included in the ASME Code IST program (or some other licensee-developed inservice testing program) and certain Code provisions cannot be met, the Commission regulations (10 CFR 50.55a) do not require a 'request for relief' to be submitted to the staff. Nevertheless, documentation that provides assurance of the continued operability of the non-Code components through the performed tests should be available at the plant site." Non-Code components are components that are important to safety, but are not in systems or portions of systems that are classified ASME Class 1, 2 or 3. It should be noted that 10CFR50.55a now references the ASME OM Code.

North Anna Power Station has elected to include certain non-Code components in the ASME IST program. Where the Code provisions are not met for non-Code components, alternative testing is performed that is adequate to ensure continued operability. The alternate testing is described in this section. There may be other deviations from Code provisions that are not described in this section. For these cases, documentation is available at the plant site.

As indicated in the Minutes of the Public Meeting on Generic Letter 89-04, a 'request for relief' need not be submitted for non-Code components. Therefore, the alternative tests described in this section are not requests for relief but are provided for information.

NON-CODE ALTERNATIVE TESTING PNC-1

Alternative Testing for Non-Code Components
Alternative Provides Acceptable Level of Quality and Safety.

1.0 ASME Non-Code Components Affected

Pump(s): 2-EG-P-2HA 2-EG-P-2JA
2-EG-P-2HB 2-EG-P-2JB

System: Fuel Oil

Group: B

Class: NC

Function: These positive displacement pumps supply fuel oil to the emergency diesel generator fuel oil day tank which directly supplies the emergency diesel generator.

2.0 Applicable Code Edition and Addenda

ASME OM Code, 2004 Edition

3.0 Applicable Code Requirements

ISTB-3300, "Reference Values"

ISTB-3300(a) requires that initial reference values shall be determined from the results of testing meeting the requirements of ISTB-3100, "Preservice Testing," or from the results of the first inservice test.

ISTB-3300(d) requires that reference values shall be established at a point(s) of operation (reference point) readily duplicated during subsequent tests.

ISTB-3300(f) requires that all subsequent test results shall be compared to these initial reference values or to new reference values established in accordance with ISTB-3310, ISTB-3320, or ISTB-6200(c).

ISTB-5320, "Inservice Testing" (Positive Displacement Pumps)

ISTB-5321(e) and ISTB-5323(e), "Group A Test Procedure and Comprehensive Test Procedure", require that all deviations from the reference values shall be compared with the ranges of Table ISTB-5321-1 and corrective action taken as specified in ISTB-6200. Vibration measurements shall be compared to both the relative and absolute criteria shown in the alert and required action ranges of Table ISTB-5321-1.

Table ISTB-3510-1 requires that pressure be measured with instruments accurate to within ±0.5% of full scale.

ISTB-3100 requires that before implementing inservice testing an initial set of reference values shall be established for each pump.

ISTB-3400 requires that a comprehensive pump test be run on each pump biennially as specified in Table ISTB-3400-1.

ISTB-5321 for positive displacement pumps requires that test quantities be measured after the pump has been running for at least two minutes.

ISTB-3510(b)(1) requires that the full-scale range of each analog instrument shall be not greater than three times the reference value.

4.0 Reason for Alternative

ISTB-3300 and ISTB-5320

The fuel oil pump groups listed in Section 1.0 tend to be smooth running pumps. Pumps 2-EG-P-2HA, 2-EG-P-1HB, 2-EG-P-1JA and 2-EG-P-1JB have at least one vibration reference value (V_r) that is currently less than 0.05 inches per second (ips). Small values for V_r produce small acceptable ranges for pump operation. The acceptable ranges are defined in Table ISTB-5300-1 as less than or equal to $2.5V_r$. Based on a small acceptable range, a smooth running pump could be subject to unnecessary corrective action.

For very small reference values, hydraulic noise and instrument error can be a significant portion of the reading and affect the repeatability of subsequent measurements. Also, experience gathered from the North Anna preventive maintenance program has shown that changes in vibration levels in the range of 0.05 ips do not normally indicate significant degradation in pump performance.

To avoid unnecessary corrective action, a minimum value for V_r of 0.05 ips has been established for velocity measurements. This minimum value will be applied to individual vibration locations for Pumps 2-EG-P-2HA, 2-EG-P-1HB, 2-EG-P-1JA and 2-EG-P-1JB where the measured reference value is less than 0.05 ips.

When new reference values are established per ISTB-3310, ISTB-3320 or ISTB-6200(c), the measured parameters will be evaluated for each location to determine if the provisions of this non-Code alternative test description still apply. If the measured V_r is greater than 0.05 ips, the requirements of ISTB-3300 will be applied. Conversely, if the measured V_r is less than 0.05 ips, a minimum value of 0.05 ips will be used for V_r even if the previous reference value was above 0.05 ips. This process will be applied to all of the EG pumps.

Table ISTB-3510-1

To comply with the pressure instrument accuracy requirement of ±0.5% for the preservice and comprehensive pump tests described in Table ISTB-3510-1, temporary pressure instrumentation must be installed. The permanently installed instruments do not meet the ±0.5% accuracy requirement. Using more accurate temporary pressure instruments with the diesel fuel oil supply system presents a hardship in that the diesel fuel oil contaminates the instruments. These instruments must then be dedicated for use with the diesel fuel oil transfer pumps and cannot be used with water systems.

ISTB-3100 and 3400

The installed pressure instruments do meet the accuracy requirements of the Group A test which is ±2% of full scale. The Group A test requires the measurement of vibration as do the preservice test and the comprehensive test. The current testing for the diesel fuel oil transfer pumps is performed within 20% of the design flow rate, which is one of the requirements of the preservice and comprehensive tests. Therefore, for the diesel fuel oil transfer pumps, the Group A test will provide a similar level of safety as the preservice and comprehensive tests.

ISTB-5321

The pump operating time is limited due to operational restraints. While the diesels are running, these pumps start automatically when the fuel oil level in the day tank reaches the low level switch, and stop when the level reaches the high level switch. The pump run time can vary depending upon the diesel load and the resulting fuel consumption rate. If the pumps are allowed to run for two minutes prior to measuring the test quantities and the fuel consumption rate is low, not enough time is available to gather all of the required ISTB test data.

ISTB-3510(b)(1)

The discharge pressure gauges have a full-scale range of 0 to 30 psig. Discharge pressure reference values range from 7.5 to 8.5 psig, less than the required 1/3 of full-scale or 10 psig. Test results show that the data is repeatable. Therefore, even though the reference values are less than 1/3 full-scale, the accuracy of the instruments provides acceptable results.

5.0 Alternative

As an alternative to performing the preservice tests, the diesel fuel oil transfer pumps will be subject to the requirements of the Group A test as described in ISTB-5321. As an alternative to performing the biennial comprehensive tests, the diesel fuel oil transfer pumps will be subject to biennial Group A tests as described in ISTB-5321. The Group A tests will be performed within 20% of the design flow rate.

The measurement of ISTB quantities will begin when the pump automatically starts on a low tank level signal.

Discharge pressure measurements will be performed with reference values slightly below the 1/3 full-scale requirement.

6.0 Duration of Alternative

The alternative described in PNC-1 will be used for the North Anna Power Station Unit 2 Fourth Ten Year Inservice Testing Interval.

Note: The diesel oil transfer pumps are positive displacement pumps. According to, Table ISTB-3000-1, discharge pressure, not differential pressure, must be measured for positive displacement pumps.

NON-CODE ALTERNATIVE TESTING PNC-2

Alternative Testing for Non-Code Components
Alternative Provides Acceptable Level of Quality and Safety.

1.0 ASME Non-Code Components Affected

Pump(s): 2-EG-P-2HB

System: Fuel Oil

Group: B

Class: NC

Function: This positive displacement pump supplies fuel oil to the emergency diesel generator fuel oil day tank which directly supplies the emergency diesel generator.

2.0 Applicable Code Edition and Addenda

ASME OM Code, 2004 Edition

3.0 Applicable Code Requirements

ISTB-5321(d) requires that vibration shall be determined and compared with the reference value and be compared to the ranges of Tables ISTB-5321-1. Vibration measurements shall be compared to both the relative and absolute criteria shown in the alert and required action ranges of Table ISTB-5321-1. For example, if vibration exceeds either 6 Vr (Velocity reference value) or 0.7 in/sec, the pump is in the required action range.

4.0 Reason for Alternative

This pump is categorized as a non-ASME Code class/Group B positive displacement pump. The Code does not require vibration data to be collected for Group B pumps. However, as described in PNC-1, Non-Code Alternate Testing, a Group A test is substituted for the comprehensive test to be performed on a 24 month frequency. ISTB-5321 requires that vibration data to be collected for Group A tests. Therefore, vibration data will be collected on a 24 month frequency. The vibration velocities for 2-EG-P-2HB have average values as follows.

Inboard Horizontal	0.1500 in/sec
Inboard Vertical	0.0700 in/sec
Axial	0.2700 in/sec
Outboard Vertical	0.4200 in/sec
Outboard Horizontal	0.1600 in/sec

The average of the Outboard Vertical vibration measurements is 0.42 ips, which is above the absolute limit of 0.325 ips for the acceptable range as required by ISTB-5321(d). This is the only vibration value that is above 0.325 ips. A review of the spectra analysis of the vibration data indicates that the higher velocity value is attributed to a source outside the mechanical portion of the pump (i.e. how the pump is mounted to the floor and/or stresses incurred due to pipe connections while the pump is operating). The historical vibration velocity data indicates a steady state condition at the higher velocity level and does not indicate a degrading trend in mechanical condition.

The hydraulic data for this same time period also shows steady state conditions within the acceptable ranges. Thus, the pump is capable of extended operation at the higher velocity level and of fulfilling its intended function.

Since the value for the 2-EG-P-2HB pump Outboard Vertical vibration parameter is the only reference vibration velocity above 0.325 ips, the acceptable and alert range will be adjusted only for the 2-EG-P-2HB Outboard Vertical vibration parameter. The vibration reference values for the remaining points on 2-EG-P-2HB and the remaining fuel oil pumps are below 0.325 ips.

5.0 Alternative

As an alternate to the ASME Code Vibration velocity limits established in ISTB-5321, the acceptable and alert ranges will be changed as follows.

Using the Code calculation in TABLE ISTB-5321-1 the acceptable range will be $\leq$ 2.5 x Vr or $\leq$ 0.325 ips (except for the Outboard Vertical parameter) and the alert range will be > 2.5 x Vr or 0.325 (except for the Outboard Vertical parameter) to 6 x Vr not to exceed 0.7000 in/sec. The required action range will remain the same at > 0.7000 in/sec. The acceptance criteria are as follows.

2-EG-P-2HB	Reference Value Vr (in/sec)	Acceptable Range (in/sec)	Alert Range (in/sec)	Required Action Range (in/sec)
Inboard Horizontal	0.1500	≤ 0.3250	0.3251 – 0.7000	> 0.7000
Inboard Vertical	0.0700	≤ 0.1750	0.1751 – 0.4200	> 0.4200
Axial	0.2700	≤ 0.3250	0.3251 – 0.7000	> 0.7000
Outboard Vertical	0.4200	≤ 0.5600	0.5601 – 0.7000	> 0.7000
Outboard Horizontal	0.1600	≤ 0.3250	0.3251 – 0.7000	> 0.7000

6.0 Duration of Alternative

The alternative described in PNC-2 will be used for the North Anna Power Station Unit 2 Fourth Ten Year Inservice Testing Interval.

4.0 VALVE INSERVICE TESTING PROGRAM DESCRIPTION

4.1 PROGRAM DEVELOPMENT PHILOSOPHY

North Anna Technical Specification 5.5.7 describes the surveillance requirements that apply to the inservice testing of ASME Code Class 1, 2 and 3 valves. The North Anna Unit 2 Inservice Testing (IST) Program for Valves has been established to meet the requirements of 10CFR50, the ASME OM Code, Subsection ISTC and Technical Specifications.

The scope of the program includes ASME Class 1, 2 and 3, and certain non-Code class valves that are required to perform a specific function in shutting down the reactor to the safe shutdown condition, maintaining the safe shutdown condition or mitigating the consequences of an accident.

ISTC defines the rules and requirements of inservice testing of Code Class 1, 2, and 3 valves and states that each valve to be tested by the rules of this subsection shall be identified by the owner and listed in the plant records.

The purpose of the IST Program Plan is to identify the valves that are considered by Virginia Electric and Power (Dominion) Company as having a safety function and are therefore subject to the testing requirements of ISTC. The intent of the Code is to assess operational readiness and detect potentially adverse changes in the mechanical condition of these valves. The relief requests for the IST Program Plan identify Code requirements considered to be impractical, provide technical basis for the request and propose alternate testing when warranted. The relief requests are presented in Section 4.5.

North Anna Unit 2 is committed to meeting the leak rate testing requirements of:

1) 10CFR50, Appendix J, Option B for containment isolation valves and

2) ISTC for other valves for which seat leakage is limited to a specific maximum amount (i.e. pressure isolation valves) unless relief is specifically requested from ISTC requirements.

4.2 PROGRAM IMPLEMENTATION

The Valve Inservice Test Program is executed as part of the normal plant surveillance routine. Three types of tests are conducted as part of the Valve Test Program:

1) valve exercise tests,
2) valve leakage tests and
3) safety valve tests.

The exercise tests verify that:

1) the valve strokes properly,
2) the valve responds to control commands,
3) the valve stroke time is within specific limits and
4) remote position indication accurately reflects the observed valve position. Remote valve position indication will be verified every two years.

Fail safe valves are tested by observing the valve operation upon loss of actuating power. In most cases, this can be accomplished using normal control circuits.

Power operated valves which are scheduled to be exercised during cold shutdown are subject to the requirements of ISTC-3521(g) which states that:

> "valve exercising during cold shutdown shall commence within 48 hr of achieving cold shutdown, and continue until all testing is complete or the plant is ready to return to power. For extended outages, testing need not be commenced in 48 hr, provided all valves required to be tested during cold shutdown will be tested prior to plant startup. However, it is not the intent of this subsection to keep the plant in cold shutdown in order to complete cold shutdown testing."

Check valves which are scheduled to be exercised during cold shutdown are subject to the requirements of ISTC-3522(e) which is similar to ISTC-35221(g).

Relief and Safety valves are required to be tested to the requirements of ISTC, Appendix I.

Certain valves cannot be full stroke exercised during normal operation following maintenance. These valves are described in the cold shutdown justifications (refer to Section 4.6) and reactor refueling justifications (refer

to Section 4.7). If maintenance cannot be deferred to a shutdown condition, then an engineering evaluation must be performed prior to the maintenance to determine the effect of the maintenance on valve performance. If the evaluation shows that performance will not be affected, then no post maintenance testing is required. A partial stroke test will be performed if practicable.

To test check valves to the full open position, the maximum required accident condition flow must be measured through the valve. In certain cases, this flow cannot be practically established or verified. Per ISTC-5221(c), disassembly and inspection of the check valves on a sampling basis is an acceptable alternative testing method.

4.3 PROGRAM ADMINISTRATION

The engineering staff at North Anna is responsible for the administration of the IST Program for Valves. The operations staff is responsible for performing the periodic tests as required by this program. The IST Program for Valves is implemented by station periodic test procedures.

4.4 VALVE INSERVICE TEST TABLE

The Valve Inservice Test Tables are the essence of the Valve Program to meet ISTC requirements. The tables reflect the positions taken in support of the relief requests. To aid the reader in the interpretation of the tables, brief explanations of the table headings and abbreviations are provided.

For non-Code valves, a request for relief is not necessary when provisions of the Code are not met. Section 4.8 contains a discussion of the testing requirements for non-Code valves and descriptions of alternative testing in cases where the provisions of the Code are not met.

1) Valve Number - Each valve in the plant has a unique "mark" number which identifies the system to which the equipment belongs and type of equipment.

2) Drawing and Sheet Number, Coordinate - The specific coordinates of each valve are supplied to facilitate location of the valves on the flow diagrams provided.

3) Valve Type - A brief description of the actuator and valve type.

The following abbreviations are used to describe actuator types. Valves may be actuated in more than one way.

MO - Motor Operated
AO - Pneumatic (Air Operated)
MAN - Manually Operated
SO - Electronic solenoid Operated Valves

4) Size - Nominal pipe diameter to which valve connects is given in inches.

5) ASME Class - ASME Code Class of each valve as per 10 CFR 50.55a and Regulatory Guide 1.26, Revision 3.

NOTE: NC is for non-Code valves. These valves are important to safety but are not in systems or portions of systems that are classified ASME Class 1, 2 or 3.

6) ISTC Category - Categories are defined by ISTC-1300. Each valve has specific testing requirements which are determined by the category to which it belongs. Valves marked with an "E" are passive valves.

7) Isolation Valve Type - Valves that are assigned a maximum leakage. The following abbreviations are used to describe the main isolation valve types:

CIV - Containment Isolation Valve subject to Appendix J, Option B leakage testing as described in Technical Specification 5.5.15.

PIV - Pressure Isolation Valve which protects low pressure safety related piping from RCS pressure. Technical Specification Table B 3.4.14-1 specifies the pressure isolation valves that are tested in accordance with this program.

C&P - Valves that serve both CIV and PIV functions

8) Test Required - Testing requirements identified for the valves are identified here.

ST - Stroke times shall be measured per ISTC-5100 or as modified by a specific relief request.

EV - Exercise Category A and B valve for operability at least once every 3 months per ISTC-3510, or as modified by a specific cold shutdown or reactor refueling justification which is allowed by ISTC-3521. Manual valves are exercised every 2 years as required by 10 CFR 50.55a(b)(3)(vi).

LT - Leak test shall be performed per ISTC-3600 or as modified by specific relief request.

CV - Check valves shall be exercised at least once every 3 months per ISTC-3510 or as modified by a specific cold shutdown or reactor refueling justification which is allowed by ISTC-3522.

VP - Valve position indication shall be verified per ISTC-3700 or as modified by a specific relief request.

SP - Set points of safety and relief valves shall be tested per ISTC, Appendix I or as modified by a specific relief request.

FS - Valves with fail-safe actuators shall be tested by observing the operation of the valves upon loss of the actuator power at least once every 3 months per ISTC-3560 or as modified by a specific cold shutdown or reactor refueling justification.

9) Test Position - The following abbreviations are used to describe normal valve positions to which the valves are tested (including the valve safety position):

O - Open
C - Closed
OC - Open and Closed
P - Partially Stroked

10) Test Frequency - The following abbreviations are used to describe the test frequency:

03 - Nominally every three months

18 - Nominally every 18 months

24 - Every 24 months

60 - Every 60 months

120 - Every 120 months

CS - Every cold shutdown but not more often then every three months

RR - Every reactor refueling outage

OPB - Per the test frequency determined by the Appendix J, Option B program for leak testing containment isolation valves

11) Relief Request Reference

12) Cold Shutdown Justification Reference

13) Reactor Refueling Justification Reference

Notes (NOTE n) and technical positions (TP-n) are also listed in this column.

14) Non-Code Alternative Test Reference

15) Function - A brief description of the function of the valve.

NORTH ANNA UNIT 2
FOURTH INSERVICE TESTING INTERVAL
VALVE INSERVICE TEST TABLE

VALVE NUMBER	DRAWING NUMBER	SHEET	COOR	VALVE TYPE	VALVE SIZE	ASME CLASS	ISTC CAT	ISO VALVE TYPE	TEST TYPE	TEST POS	TEST FREQ	RE REQ V-	CS JUST CSV-	RR JUST RRV-	NC ALT TEST VNC-
2-BD-TV-200A	12050-CBM-098A	2 OF 5	C6	AO GLOBE	3	2	A	CIV	EV	C	03				
									FS	C	03				
									LT	C	OPB				
									ST	C	03				
									VP	OC	24				
	"A" STEAM GENERATOR BLOWDOWN, OUTSIDE CONTAINMENT ISOLATION VALVE														
2-BD-TV-200B	12050-CBM-098A	2 OF 5	C5	AO GLOBE	3	2	A	CIV	EV	C	03				
									FS	C	03				
									LT	C	OPB				
									ST	C	03				
									VP	OC	24				
	"A" STEAM GENERATOR BLOWDOWN, INSIDE CONTAINMENT ISOLATION VALVE														
2-BD-TV-200C	12050-CBM-098A	3 OF 5	C6	AO GLOBE	3	2	A	CIV	EV	C	03				
									FS	C	03				
									LT	C	OPB				
									ST	C	03				
									VP	OC	24				
	"B" STEAM GENERATOR BLOWDOWN, OUTSIDE CONTAINMENT ISOLATION VALVE														
2-BD-TV-200D	12050-CBM-098A	3 OF 5	C5	AO GLOBE	3	2	A	CIV	EV	C	03				
									FS	C	03				
									LT	C	OPB				
									ST	C	03				
									VP	OC	24				
	"B" STEAM GENERATOR BLOWDOWN, INSIDE CONTAINMENT ISOLATION VALVE														
2-BD-TV-200E	12050-CBM-098A	4 OF 5	C6	AO GLOBE	3	2	A	CIV	EV	C	03				
									FS	C	03				
									LT	C	OPB				
									ST	C	03				
									VP	OC	24				
	"C" STEAM GENERATOR BLOWDOWN, OUTSIDE CONTAINMENT ISOLATION VALVE														

NORTH ANNA UNIT 2
FOURTH INSERVICE TESTING INTERVAL
VALVE INSERVICE TEST TABLE

VALVE NUMBER	DRAWING NUMBER	SHEET	COOR	VALVE TYPE	VALVE SIZE	ASME CLASS	ISTC CAT	ISO VALVE TYPE	TEST TYPE	TEST POS	TEST FREQ	RE REQ V-	CS JUST CSV-	RR JUST RRV-	NC ALT TEST VNC-
2-BD-TV-200F	12050-CBM-098A	4 OF 5	C5	AO GLOBE	3	2	A	CIV	EV	C	03				
									FS	C	03				
									LT	C	OPB				
									ST	C	03				
									VP	OC	24				
	"C" STEAM GENERATOR BLOWDOWN, INSIDE CONTAINMENT ISOLATION VALVE														
2-BD-TV-200G	12050-CBM-098A	2 OF 5	C4	AO GLOBE	3	2	B		EV	C	03				
									FS	C	03				
									ST	C	03				
									VP	OC	24				
	"A" STEAM GENERATOR BLOWDOWN, INSIDE CONTAINMENT ISOLATION VALVE														
2-BD-TV-200H	12050-CBM-098A	3 OF 5	C4	AO GLOBE	3	2	B		EV	C	03				
									FS	C	03				
									ST	C	03				
									VP	OC	24				
	"B" STEAM GENERATOR BLOWDOWN, INSIDE CONTAINMENT ISOLATION VALVE														
2-BD-TV-200J	12050-CBM-098A	4 OF 5	C4	AO GLOBE	3	2	B		EV	C	03				
									FS	C	03				
									ST	C	03				
									VP	OC	24				
	"C" STEAM GENERATOR BLOWDOWN, INSIDE CONTAINMENT ISOLATION VALVE														

NORTH ANNA UNIT 2
FOURTH INSERVICE TESTING INTERVAL
VALVE INSERVICE TEST TABLE

VALVE NUMBER	DRAWING NUMBER	SHEET	COOR	VALVE TYPE	VALVE SIZE	ASME CLASS	ISTC CAT	ISO VALVE TYPE	TEST TYPE	TEST POS	TEST FREQ	RE REQ V-	CS JUST CSV-	RR JUST RRV-	NC ALT TEST VNC-
2-CC-010	11715-CBM-079A	2 OF 3	E6	CHECK VALVE	18	3	C		CV	C	03				
										O	03				
	"A" COMPONENT COOLING PUMP DISCHARGE CHECK VALVE														
2-CC-027	11715-CBM-079A	2 OF 3	D6	CHECK VALVE	18	3	C		CV	C	03				
										O	03				
	"B" COMPONENT COOLING PUMP DISCHARGE CHECK VALVE														
2-CC-078	12050-CBM-079A	2 OF 5	F7	CHECK VALVE	6	2	AC	CIV	CV	C	RR			1	
										O	RR	TP-01		1	
									LT	C	OPB				
	CC SUPPLY TO "A" RC PUMP LO, STATOR SHROUD & THERM BARRIER COOLERS, IN CONT ISOL CHECK VLV														
2-CC-107	12050-CBM-079A	2 OF 5	C7	CHECK VALVE	3	3	C		CV	C	RR			21	
										O	RR	TP-01		21	
	CC SUPPLY TO "A" RC PUMP THERMAL BARRIER COOLER CHECK VALVE														
2-CC-115	12050-CBM-079A	3 OF 5	F7	CHECK VALVE	6	2	AC	CIV	CV	C	RR			1	
										O	RR	TP-01		1	
									LT	C	OPB				
	CC SUPPLY TO "B" RC PUMP LO, STATOR SHROUD & THERM BARRIER COOLERS, IN CONT ISOL CHECK VLV														
2-CC-144	12050-CBM-079A	3 OF 5	C7	CHECK VALVE	3	3	C		CV	C	RR			21	
										O	RR	TP-01		21	
	CC SUPPLY TO "B" RC PUMP THERMAL BARRIER COOLER CHECK VALVE														
2-CC-152	12050-CBM-079A	4 OF 5	F7	CHECK VALVE	6	2	AC	CIV	CV	C	RR			1	
										O	RR	TP-01		1	
									LT	C	OPB				
	CC SUPPLY TO "C" RC PUMP LO, STATOR SHROUD & THERM BARRIER COOLERS, IN CONT ISOL CHECK VLV														
2-CC-181	12050-CBM-079A	4 OF 5	C7	CHECK VALVE	3	3	C		CV	C	RR			21	
										O	RR	TP-01		21	
	CC SUPPLY TO "C" RC PUMP THERMAL BARRIER COOLER CHECK VALVE														

NORTH ANNA UNIT 2
FOURTH INSERVICE TESTING INTERVAL
VALVE INSERVICE TEST TABLE

VALVE NUMBER	DRAWING NUMBER	SHEET	COOR	VALVE TYPE	VALVE SIZE	ASME CLASS	ISTC CAT	ISO VALVE TYPE	TEST TYPE	TEST POS	TEST FREQ	RE REQ V-	CS JUST CSV-	RR JUST RRV-	NC ALT TEST VNC-
2-CC-194	12050-CBM-079A	1 OF 5	F7	CHECK VALVE	18	2	AC	CIV	CV	C	RR			23	
										O	RR			23	
									LT	C	OPB				
	CC SUPPLY TO "A" RHR HEAT EXCHANGER														
2-CC-199	12050-CBM-079A	1 OF 5	F7	CHECK VALVE	18	2	AC	CIV	CV	C	RR			23	
										O	RR			23	
									LT	C	OPB				
	CC SUPPLY TO "B" RHR HEAT EXCHANGER														
2-CC-276	12050-CBM-079B	3 OF 3	E8	CHECK VALVE	6	2	AC	CIV	CV	C	RR			20	
										O	RR	TP-01		20	
									LT	C	OPB				
	CC SUPPLY TO "A" RECIRC AIR COOLING COILS, OUTSIDE CONTAINMENT ISOLATION CHECK VALVE														
2-CC-289	12050-CBM-079B	3 OF 3	D8	CHECK VALVE	6	2	AC	CIV	CV	C	RR			20	
										O	RR	TP-01		20	
									LT	C	OPB				
	CC SUPPLY TO "B" RECIRC AIR COOLING COILS, OUTSIDE CONTAINMENT ISOLATION CHECK VALVE														
2-CC-302	12050-CBM-079B	3 OF 3	C8	CHECK VALVE	6	2	AC	CIV	CV	C	RR			20	
										O	RR	TP-01		20	
									LT	C	OPB				
	CC SUPPLY TO "C" RECIRC AIR COOLING COILS, OUTSIDE CONTAINMENT ISOLATION CHECK VALVE														
2-CC-MOV-200A	12050-CBM-079A	1 OF 5	A3	MO BFLY	18	3	B		EV	O	03				
									ST	O	03				
									VP	OC	24				
	COMPONENT COOLING WATER RETURN THROTTLING VALVE FROM "A" RHR HEAT EXCHANGER														
2-CC-MOV-200B	12050-CBM-079A	1 OF 5	B3	MO BFLY	18	3	B		EV	O	03				
									ST	O	03				
									VP	OC	24				
	COMPONENT COOLING WATER RETURN THROTTLING VALVE FROM "B" RHR HEAT EXCHANGER														

NORTH ANNA UNIT 2
FOURTH INSERVICE TESTING INTERVAL
VALVE INSERVICE TEST TABLE

VALVE NUMBER	DRAWING NUMBER	SHEET	COOR	VALVE TYPE	VALVE SIZE	ASME CLASS	ISTC CAT	ISO VALVE TYPE	TEST TYPE	TEST POS	TEST FREQ	RE REQ V-	CS JUST CSV-	RR JUST RRV-	NC ALT TEST VNC-
2-CC-RV-204A	12050-CBM-079B	3 OF 3	E5	RELIEF VALVE	0.75	NC	C		SP	O	120	NOTE 1			5
	CONTAINMENT PENETRATION 11 RELIEF VALVE - CC SUPPLY TO RECIRC AIR COOLERS														
2-CC-RV-204B	12050-CBM-079B	3 OF 3	D5	RELIEF VALVE	0.75	NC	C		SP	O	120	NOTE 1			5
	CONTAINMENT PENETRATION 10 RELIEF VALVE - CC SUPPLY TO RECIRC AIR COOLERS														
2-CC-RV-204C	12050-CBM-079B	3 OF 3	C5	RELIEF VALVE	0.75	NC	C		SP	O	120	NOTE 1			5
	CONTAINMENT PENETRATION 9 RELIEF VALVE - CC SUPPLY TP RECIRC AIR COOLERS														
2-CC-RV-224A	12050-CBM-079A	2 OF 5	F6	RELIEF VALVE	3	3	C		SP	O	120	3, NOTE 1			
	COMPONENT COOLING WATER TO REACTOR SHROUD HEAT EXCHANGER RELIEF VALVE														
2-CC-RV-224B	12050-CBM-079A	3 OF 5	F6	RELIEF VALVE	3	3	C		SP	O	120	3, NOTE 1			
	COMPONENT COOLING WATER TO REACTOR SHROUD HEAT EXCHANGER RELIEF VALVE														
2-CC-RV-224C	12050-CBM-079A	4 OF 5	F6	RELIEF VALVE	3	3	C		SP	O	120	3, NOTE 1			
	COMPONENT COOLING WATER TO REACTOR SHROUD HEAT EXCHANGER RELIEF VALVE														
2-CC-RV-225A	12050-CBM-079A	2 OF 5	C6	RELIEF VALVE	0.75	3	C		SP	O	120	3, NOTE 1			
	CC SUPPLY TO "A" RC PUMP THERMAL BARRIER RELIEF VALVE														
2-CC-RV-225B	12050-CBM-079A	3 OF 5	C6	RELIEF VALVE	0.75	3	C		SP	O	120	3, NOTE 1			
	CC SUPPLY TO "B" RC PUMP THERMAL BARRIER RELIEF VALVE														
2-CC-RV-225C	12050-CBM-079A	4 OF 5	C6	RELIEF VALVE	0.75	3	C		SP	O	120	3, NOTE 1			
	CC SUPPLY TO "C" RC PUMP THERMAL BARRIER RELIEF VALVE														
2-CC-RV-226	12050-CBM-079A	5 OF 5	C6	RELIEF VALVE	1	3	C		SP	O	120	3, NOTE 1			
	EXCESS LETDOWN HEAT EXCHANGER COMPONENT COOLING WATER PENETRATION 1 RELIEF VALVE														
2-CC-RV-228A	12050-CBM-079A	1 OF 5	E3	RELIEF VALVE	0.75	3	C		SP	O	120	3, NOTE 1			
	"A" RHR HEAT EXCHANGER COMPONENT COOLING RELIEF VALVE														
2-CC-RV-228B	12050-CBM-079A	1 OF 5	D3	RELIEF VALVE	0.75	3	C		SP	O	120	3, NOTE 1			

NORTH ANNA UNIT 2
FOURTH INSERVICE TESTING INTERVAL
VALVE INSERVICE TEST TABLE

VALVE NUMBER	DRAWING NUMBER	SHEET	COOR	VALVE TYPE	VALVE SIZE	ASME CLASS	ISTC CAT	ISO VALVE TYPE	TEST TYPE	TEST POS	TEST FREQ	RE REQ V-	CS JUST CSV-	RR JUST RRV-	NC ALT TEST VNC-
	"B" RHR HEAT EXCHANGER COMPONENT COOLING RELIEF VALVE														
2-CC-RV-231A	12050-CBM-079A	5 OF 5	C4	RELIEF VALVE	0.75	3	C		SP	O	120	3, NOTE 1			
	RHR PUMP SEAL COOLER RELIEF VALVE														
2-CC-RV-231B	12050-CBM-079A	5 OF 5	B4	RELIEF VALVE	0.75	3	C		SP	O	120	3, NOTE 1			
	RHR PUMP SEAL COOLER RELIEF VALVE														
2-CC-TV-200A	12050-CBM-079B	3 OF 3	E3	AO BFLY	6	2	A	CIV	EV	C	03				
									FS	C	03				
									LT	C	OPB				
									ST	C	03				
									VP	OC	24				
	CC RETURN FROM "A" RECIRC AIR COOLING COILS, OUTSIDE CONTAINMENT ISOLATION VALVE														
2-CC-TV-200B	12050-CBM-079B	3 OF 3	D3	AO BFLY	6	2	A	CIV	EV	C	03				
									FS	C	03				
									LT	C	OPB				
									ST	C	03				
									VP	OC	24				
	CC RETURN FROM "B" RECIRC AIR COOLING COILS, OUTSIDE CONTAINMENT ISOLATION VALVE														
2-CC-TV-200C	12050-CBM-079B	3 OF 3	C3	AO BFLY	6	2	A	CIV	EV	C	03				
									FS	C	03				
									LT	C	OPB				
									ST	C	03				
									VP	OC	24				
	CC RETURN FROM "C" RECIRC AIR COOLING COILS, OUTSIDE CONTAINMENT ISOLATION VALVE														
2-CC-TV-201A	12050-CBM-079A	1 OF 5	D7	AO GLOBE	4	2	A	CIV	EV	C	CS		1		
									FS	C	CS		1		
									LT	C	OPB				
									ST	C	CS		1		
									VP	OC	24				

NORTH ANNA UNIT 2
FOURTH INSERVICE TESTING INTERVAL
VALVE INSERVICE TEST TABLE

VALVE NUMBER	DRAWING NUMBER	SHEET	COOR	VALVE TYPE	VALVE SIZE	ASME CLASS	ISTC CAT	ISO VALVE TYPE	TEST TYPE	TEST POS	TEST FREQ	RE REQ V-	CS JUST CSV-	RR JUST RRV-	NC ALT TEST VNC-
	CC RETURN FROM REACTOR COOLANT PUMP THERMAL BARRIERS, OUTSIDE CONTAINMENT ISOLATION VALVE														
2-CC-TV-201B	12050-CBM-079A	1 OF 5	D6	AO GLOBE	4	2	A	CIV	EV	C	CS		1		
									FS	C	CS		1		
									LT	C	OPB				
									ST	C	CS		1		
									VP	OC	24				
	CC RETURN FROM REACTOR COOLANT PUMP THERMAL BARRIERS, INSIDE CONTAINMENT ISOLATION VALVE														
2-CC-TV-202A	12050-CBM-079A	4 OF 5	A5	AO BFLY	8	2	A	CIV	EV	C	CS		1		
									FS	C	CS		1		
									LT	C	OPB				
									ST	C	CS		1		
									VP	OC	24				
	CC RETURN FROM "C" RC PUMP LO, STATOR & SHROUD COOLERS, OUTSIDE CONTAINMENT ISOLATION VALVE														
2-CC-TV-202B	12050-CBM-079A	4 OF 5	A3	AO BFLY	8	2	A	CIV	EV	C	CS		1		
									FS	C	CS		1		
									LT	C	OPB				
									ST	C	CS		1		
									VP	OC	24				
	CC RETURN FROM "C" RC PUMP LO, STATOR & SHROUD COOLERS, INSIDE CONTAINMENT ISOLATION VALVE														
2-CC-TV-202C	12050-CBM-079A	3 OF 5	A5	AO BFLY	8	2	A	CIV	EV	C	CS		1		
									FS	C	CS		1		
									LT	C	OPB				
									ST	C	CS		1		
									VP	OC	24				
	CC RETURN FROM "B" RC PUMP LO, STATOR & SHROUD COOLERS, OUTSIDE CONTAINMENT ISOLATION VALVE														
2-CC-TV-202D	12050-CBM-079A	3 OF 5	A3	AO BFLY	8	2	A	CIV	EV	C	CS		1		
									FS	C	CS		1		
									LT	C	OPB				
									ST	C	CS		1		
									VP	OC	24				

NORTH ANNA UNIT 2
FOURTH INSERVICE TESTING INTERVAL
VALVE INSERVICE TEST TABLE

VALVE NUMBER	DRAWING NUMBER	SHEET	COOR	VALVE TYPE	VALVE SIZE	ASME CLASS	ISTC CAT	ISO VALVE TYPE	TEST TYPE	TEST POS	TEST FREQ	RE REQ V-	CS JUST CSV-	RR JUST RRV-	NC ALT TEST VNC-
	CC RETURN FROM "B" RC PUMP LO, STATOR & SHROUD COOLERS, INSIDE CONTAINMENT ISOLATION VALVE														
2-CC-TV-202E	12050-CBM-079A	2 OF 5	A5	AO BFLY	8	2	A	CIV	EV	C	CS		1		
									FS	C	CS		1		
									LT	C	OPB				
									ST	C	CS		1		
									VP	OC	24				
	CC RETURN FROM "A" RC PUMP LO, STATOR & SHROUD COOLERS, OUTSIDE CONTAINMENT ISOLATION VALVE														
2-CC-TV-202F	12050-CBM-079A	2 OF 5	A3	AO BFLY	8	2	A	CIV	EV	C	CS		1		
									FS	C	CS		1		
									LT	C	OPB				
									ST	C	CS		1		
									VP	OC	24				
	CC RETURN FROM "A" RC PUMP LO, STATOR & SHROUD COOLERS, INSIDE CONTAINMENT ISOLATION VALVE														
2-CC-TV-203A	12050-CBM-079A	1 OF 5	A7	AO BFLY	18	2	A	CIV	EV	C	03				
										O	03				
									FS	C	03				
									LT	C	OPB				
									ST	C	03				
										O	03				
									VP	OC	24				
	CC RETURN FROM "A" RHR HEAT EXCHANGER, OUTSIDE CONTAINMENT ISOLATION VALVE														
2-CC-TV-203B	12050-CBM-079A	1 OF 5	B7	AO BFLY	18	2	A	CIV	EV	C	03				
										O	03				
									FS	C	03				
									LT	C	OPB				
									ST	C	03				
										O	03				
									VP	OC	24				
	CC RETURN FROM "B" RHR HEAT EXCHANGER, OUTSIDE CONTAINMENT ISOLATION VALVE														
2-CC-TV-204A	12050-CBM-079A	2 OF 5	E8	AO BFLY	8	2	A	CIV	EV	C	CS		1		

NORTH ANNA UNIT 2
FOURTH INSERVICE TESTING INTERVAL
VALVE INSERVICE TEST TABLE

VALVE NUMBER	DRAWING NUMBER	SHEET	COOR	VALVE TYPE	VALVE SIZE	ASME CLASS	ISTC CAT	ISO VALVE TYPE	TEST TYPE	TEST POS	TEST FREQ	RE REQ V-	CS JUST CSV-	RR JUST RRV-	NC ALT TEST VNC-
2-CC-TV-204A	12050-CBM-079A	2 OF 5	E8	AO BFLY	8	2	A	CIV	FS	C	CS		1		
									LT	C	OPB				
									ST	C	CS		1		
									VP	OC	24				
	CC SUPPLY TO "A" RC PUMP LO, STATOR, SHROUD & THERM BARRIER COOLERS, OUTSIDE CONT ISOL VLV														
2-CC-TV-204B	12050-CBM-079A	3 OF 5	E8	AO BFLY	8	2	A	CIV	EV	C	CS		1		
									FS	C	CS		1		
									LT	C	OPB				
									ST	C	CS		1		
									VP	OC	24				
	CC SUPPLY TO "B" RC PUMP LO, STATOR, SHROUD & THERM BARRIER COOLERS, OUTSIDE CONT ISOL VLV														
2-CC-TV-204C	12050-CBM-079A	4 OF 5	E8	AO BFLY	8	2	A	CIV	EV	C	CS		1		
									FS	C	CS		1		
									LT	C	OPB				
									ST	C	CS		1		
									VP	OC	24				
	CC SUPPLY TO "C" RC PUMP LO, STATOR, SHROUD & THERM BARRIER COOLERS, OUTSIDE CONT ISOL VLV														
2-CC-TV-205A	12050-CBM-079B	3 OF 3	E4	AO BFLY	6	2	A	CIV	EV	C	03				
									FS	C	03				
									LT	C	OPB				
									ST	C	03				
									VP	OC	24				
	CC RETURN FROM "A" RECIRC AIR COOLING COILS, INSIDE CONTAINMENT ISOLATION VALVE														
2-CC-TV-205B	12050-CBM-079B	3 OF 3	D4	AO BFLY	6	2	A	CIV	EV	C	03				
									FS	C	03				
									LT	C	OPB				
									ST	C	03				
									VP	OC	24				
	CC RETURN FROM "B" RECIRC AIR COOLING COILS, INSIDE CONTAINMENT ISOLATION VALVE														
2-CC-TV-205C	12050-CBM-079B	3 OF 3	B4	AO BFLY	6	2	A	CIV	EV	C	03				

NORTH ANNA UNIT 2
FOURTH INSERVICE TESTING INTERVAL
VALVE INSERVICE TEST TABLE

VALVE NUMBER	DRAWING NUMBER	SHEET	COOR	VALVE TYPE	VALVE SIZE	ASME CLASS	ISTC CAT	ISO VALVE TYPE	TEST TYPE	TEST POS	TEST FREQ	RE REQ V-	CS JUST CSV-	RR JUST RRV-	NC ALT TEST VNC-
2-CC-TV-205C	12050-CBM-079B	3 OF 3	B4	AO BFLY	6	2	A	CIV	FS	C	03				
									LT	C	OPB				
									ST	C	03				
									VP	OC	24				
	CC RETURN FROM "C" RECIRC AIR COOLING COILS, INSIDE CONTAINMENT ISOLATION VALVE														

NORTH ANNA UNIT 2
FOURTH INSERVICE TESTING INTERVAL
VALVE INSERVICE TEST TABLE

VALVE NUMBER	DRAWING NUMBER	SHEET	COOR	VALVE TYPE	VALVE SIZE	ASME CLASS	ISTC CAT	ISO VALVE TYPE	TEST TYPE	TEST POS	TEST FREQ	RE REQ V-	CS JUST CSV-	RR JUST RRV-	NC ALT TEST VNC-
2-CD-163	11715-CBB-040C	2 OF 3	E6	CHECK VALVE	3	3	C		CV	C O	RR 03			32	
	CONTROL ROOM CHILLED WATER SYSTEM PUMP DISCHARGE CHECK VALVE														
2-CD-187	11715-CBB-040C	2 OF 3	D6	CHECK VALVE	3	3	C		CV	C O	RR 03			32	
	CONTROL ROOM CHILLED WATER SYSTEM PUMP DISCHARGE CHECK VALVE														
2-CD-211	11715-CBB-040C	2 OF 3	C4	CHECK VALVE	3	3	C		CV	C O	RR 03			32	
	CONTROL ROOM CHILLED WATER SYSTEM PUMP DISCHARGE CHECK VALVE														

NORTH ANNA UNIT 2
FOURTH INSERVICE TESTING INTERVAL
VALVE INSERVICE TEST TABLE

VALVE NUMBER	DRAWING NUMBER	SHEET	COOR	VALVE TYPE	VALVE SIZE	ASME CLASS	ISTC CAT	ISO VALVE TYPE	TEST TYPE	TEST POS	TEST FREQ	RE REQ V-	CS JUST CSV-	RR JUST RRV-	NC ALT TEST VNC-
1-CH-118	11715-CBM-095A	1 OF 4	C6	CHECK VALVE	2	3	C		CV	C	CS		29		
										O	CS		29		
	"C" BORIC ACID TRANSFER PUMP DISCHARGE CHECK VALVE														
1-CH-133	11715-CBM-095A	1 OF 4	C7	CHECK VALVE	2	3	C		CV	C	CS		29		
										O	CS		29		
	"D" BORIC ACID TRANSFER PUMP DISCHARGE CHECK VALVE														
2-CH-153	12050-CBM-095B	1 OF 2	B6	CHECK VALVE	4	2	AC		CV	C	RR			24	
										O	03				
									LT	C	24				
	CHARGING PUMP SUPPLY FROM VOLUME CONTROL TANK ISOLATION VALVE														
2-CH-155	12050-CBM-095B	1 OF 2	C3	CHECK VALVE	1	3	C		CV	C	RR			33	
										O	RR			33	
	ALTERNATE EMERGENCY BORATION LINE CHECK VALVE														
2-CH-156	12050-CBM-095B	1 OF 2	B4	MAN DIAPHRAGM	1	3	B		EV	O	24				
	ALTERNATE EMERGENCY BORATION LINE MANUAL VALVE														
2-CH-157	12050-CBM-095B	1 OF 2	B4	CHECK VALVE	1	2	C		CV	C	RR			33	
										O	RR			33	
	ALTERNATE EMERGENCY BORATION LINE TO CHARGING PUMP SUCTION CHECK VALVE														
2-CH-159	12050-CBM-095B	1 OF 2	B5	CHECK VALVE	2	2	C		CV	C	RR			33	
										O	RR			33	
	MAIN EMERGENCY BORATION LINE TO CHARGING PUMP SUCTION CHECK VALVE														
2-CH-176	12050-CBM-095B	2 OF 2	D4	CHECK VALVE	2	2	C		CV	C	RR			36	
										O	RR			36	
	"A" CHARGING PUMP DISCHARGE RECIRC LINE CHECK VALVE														
2-CH-178	12050-CBM-095B	2 OF 2	D4	CHECK VALVE	3	2	C		CV	C	03				
										O	RR			18	

NORTH ANNA UNIT 2
FOURTH INSERVICE TESTING INTERVAL
VALVE INSERVICE TEST TABLE

VALVE NUMBER	DRAWING NUMBER	SHEET	COOR	VALVE TYPE	VALVE SIZE	ASME CLASS	ISTC CAT	ISO VALVE TYPE	TEST TYPE	TEST POS	TEST FREQ	RE REQ V-	CS JUST CSV-	RR JUST RRV-	NC ALT TEST VNC-
	"A" CHARGING PUMP DISCHARGE CHECK VALVE														
2-CH-191	12050-CBM-095B	2 OF 2	D6	CHECK VALVE	2	2	C		CV	C	RR			36	
										O	RR			36	
	"B" CHARGING PUMP DISCHARGE RECIRC LINE CHECK VALVE														
2-CH-193	12050-CBM-095B	2 OF 2	D6	CHECK VALVE	3	2	C		CV	C	03				
										O	RR			18	
	"B" CHARGING PUMP DISCHARGE CHECK VALVE														
2-CH-206	12050-CBM-095B	2 OF 2	D7	CHECK VALVE	2	2	C		CV	C	RR			36	
										O	RR			36	
	"C" CHARGING PUMP DISCHARGE RECIRC LINE CHECK VALVE														
2-CH-208	12050-CBM-095B	2 OF 2	D7	CHECK VALVE	3	2	C		CV	C	03				
										O	RR			18	
	"C" CHARGING PUMP DISCHARGE CHECK VALVE														
2-CH-260	12050-CBM-095C	2 OF 2	B8	CHECK VALVE	2	1	C		CV	C	RR			2	
										O	RR	TP-01		2	
	"A" RC PUMP SEAL WATER SUPPLY, INSIDE CONTAINMENT ISOLATION CHECK VALVE														
2-CH-284	12050-CBM-095C	2 OF 2	B7	CHECK VALVE	2	1	C		CV	C	RR			2	
										O	RR	TP-01		2	
	"B" RC PUMP SEAL WATER SUPPLY, INSIDE CONTAINMENT ISOLATION CHECK VALVE														
2-CH-308	12050-CBM-095C	2 OF 2	B5	CHECK VALVE	2	1	C		CV	C	RR			2	
										O	RR	TP-01		2	
	"C" RC PUMP SEAL WATER SUPPLY, INSIDE CONTAINMENT ISOLATION CHECK VALVE														
2-CH-331	12050-CBM-095C	2 OF 2	F4	CHECK VALVE	0.75	2	AC	CIV	CV	C	RR			2	
										O	RR			2	
									LT	C	OPB				
	RC PUMP SEAL WATER RETURN, INSIDE CONTAINMENT ISOLATION CHECK VALVE														

NORTH ANNA UNIT 2
FOURTH INSERVICE TESTING INTERVAL
VALVE INSERVICE TEST TABLE

VALVE NUMBER	DRAWING NUMBER	SHEET	COOR	VALVE TYPE	VALVE SIZE	ASME CLASS	ISTC CAT	ISO VALVE TYPE	TEST TYPE	TEST POS	TEST FREQ	RE REQ V-	CS JUST CSV-	RR JUST RRV-	NC ALT TEST VNC-
2-CH-332	12050-CBM-095C	1 OF 2	A5	CHECK VALVE	2	1	C		CV	C	RR			2	
										O	RR			2	
	CHARGING SUPPLY TO LOOP FILL HEADER, INSIDE CONTAINMENT ISOLATION CHECK VALVE														
2-CH-335	12050-CBM-095C	1 OF 2	D4	CHECK VALVE	3	1	C		CV	C	RR			2	
										O	RR	TP-01		2	
	MAIN CHARGING SUPPLY HEADER, INSIDE CONTAINMENT ISOLATION CHECK VALVE														
2-CH-495	12050-CBM-095B	1 OF 2	B6	CHECK VALVE	2	2	AC		CV	C	RR			24	
										O	RR			24	
									LT	C	24				
	CHARGING PUMP RECIRC AND RCP SEAL WATER RETURN LINE ISOLATION CHECK VALVE														
2-CH-FCV-2113A	12050-CBM-095B	1 OF 2	C3	AO GLOBE	1	3	B		EV	O	03				
									FS	O	03				
									ST	O	NA	2			
									VP	OC	24				
	ALTERNATE EMERGENCY BORATION LINE FLOW CONTROL VALVE														
2-CH-FCV-2114A	12050-CBM-095B	1 OF 2	D4	AO DIAPHRAGM	1	NC	B		EV	C	03				
									FS	C	03				
									ST	C	NA	2			
									VP	OC	24				
	PRIMARY GRADE WATER FLOW CONTROL VALVE														
2-CH-FCV-2160	12050-CBM-095C	1 OF 2	A4	AO GLOBE	2	2	E		VP	OC	24				
	CHARGING FLOW CONTROL TO LOOP FILL HEADER, OUTSIDE CONTAINMENT ISOLATION VALVE														
2-CH-LCV-2460A	12050-CBM-095C	1 OF 2	F7	AO GLOBE	3	1	B		EV	C	CS		3		
									FS	C	CS		3		
									ST	C	CS		3		
									VP	OC	24				

NORTH ANNA UNIT 2
FOURTH INSERVICE TESTING INTERVAL
VALVE INSERVICE TEST TABLE

VALVE NUMBER	DRAWING NUMBER	SHEET	COOR	VALVE TYPE	VALVE SIZE	ASME CLASS	ISTC CAT	ISO VALVE TYPE	TEST TYPE	TEST POS	TEST FREQ	RE REQ V-	CS JUST CSV-	RR JUST RRV-	NC ALT TEST VNC-
	LETDOWN ISOLATION VALVE														
2-CH-LCV-2460B	12050-CBM-095C	1 OF 2	F7	AO GLOBE	3	1	B		EV	C	CS		3		
									FS	C	CS		3		
									ST	C	CS		3		
									VP	OC	24				
	LETDOWN ISOLATION VALVE														
2-CH-MOV-2115B	12050-CBM-095B	2 OF 2	B8	MO GATE	8	2	A		EV	C	CS		4		
										O	CS		4		
									LT	C	24	1			
									ST	C	CS		4		
										O	CS		4		
									VP	OC	24				
	CHARGING PUMP SUPPLY ISOLATION VALVE FROM REFUELING WATER STORAGE TANK														
2-CH-MOV-2115C	12050-CBM-095B	1 OF 2	C6	MO GATE	4	2	B		EV	C	CS		4		
									ST	C	CS		4		
									VP	OC	24				
	CHARGING PUMP SUPPLY ISOLATION FROM VOLUME CONTROL TANK														
2-CH-MOV-2115D	12050-CBM-095B	2 OF 2	B8	MO GATE	8	2	A		EV	C	CS		4		
										O	CS		4		
									LT	C	24	1			
									ST	C	CS		4		
										O	CS		4		
									VP	OC	24				
	CHARGING PUMP SUPPLY ISOLATION VALVE FROM REFUELING WATER STORAGE TANK														
2-CH-MOV-2115E	12050-CBM-095B	1 OF 2	C6	MO GATE	4	2	B		EV	C	CS		4		
									ST	C	CS		4		
									VP	OC	24				
	CHARGING PUMP SUPPLY ISOLATION VALVE FROM VOLUME CONTROL TANK														
2-CH-MOV-2267A	12050-CBM-095B	2 OF 2	C3	MO GATE	6	2	E		VP	OC	24				

NORTH ANNA UNIT 2
FOURTH INSERVICE TESTING INTERVAL
VALVE INSERVICE TEST TABLE

VALVE NUMBER	DRAWING NUMBER	SHEET	COOR	VALVE TYPE	VALVE SIZE	ASME CLASS	ISTC CAT	ISO VALVE TYPE	TEST TYPE	TEST POS	TEST FREQ	RE REQ V-	CS JUST CSV-	RR JUST RRV-	NC ALT TEST VNC-
	"A" CHARGING PUMP SUCTION ISOLATION FROM RWST AND VCT														
2-CH-MOV-2267B	12050-CBM-095B	2 OF 2	C3	MO GATE	6	2	E		VP	OC	24				
	"A" CHARGING PUMP SUCTION ISOLATION FROM LHSI														
2-CH-MOV-2269A	12050-CBM-095B	2 OF 2	C5	MO GATE	6	2	E		VP	OC	24				
	"B" CHARGING PUMP SUCTION ISOLATION FROM RWST AND VCT														
2-CH-MOV-2269B	12050-CBM-095B	2 OF 2	C5	MO GATE	6	2	E		VP	OC	24				
	"B" CHARGING PUMP SUCTION ISOLATION FROM LHSI -														
2-CH-MOV-2270A	12050-CBM-095B	2 OF 2	C7	MO GATE	6	2	E		VP	OC	24				
	"C" CHARGING PUMP SUCTION ISOLATION FROM RWST AND VCT														
2-CH-MOV-2270B	12050-CBM-095B	2 OF 2	C7	MO GATE	6	2	E		VP	OC	24				
	"C" CHARGING PUMP SUCTION ISOLATION FROM LHSI														
2-CH-MOV-2275A	12050-CBM-095B	2 OF 2	D4	MO GATE	2	2	B		EV	C	03				
										O	03				
									ST	C	03				
										O	03				
									VP	OC	24				
	"A" CHARGING PUMP MINIMUM RECIRCULATION ISOLATION VALVE														
2-CH-MOV-2275B	12050-CBM-095B	2 OF 2	D5	MO GATE	2	2	B		EV	C	03				
										O	03				
									ST	C	03				
										O	03				
									VP	OC	24				
	"B" CHARGING PUMP MINIMUM RECIRCULATION ISOLATION VALVE														
2-CH-MOV-2275C	12050-CBM-095B	2 OF 2	D7	MO GATE	2	2	B		EV	C	03				
										O	03				
									ST	C	03				
										O	03				

NORTH ANNA UNIT 2
FOURTH INSERVICE TESTING INTERVAL
VALVE INSERVICE TEST TABLE

VALVE NUMBER	DRAWING NUMBER	SHEET	COOR	VALVE TYPE	VALVE SIZE	ASME CLASS	ISTC CAT	ISO VALVE TYPE	TEST TYPE	TEST POS	TEST FREQ	RE REQ V-	CS JUST CSV-	RR JUST RRV-	NC ALT TEST VNC-
2-CH-MOV-2275C	12050-CBM-095B	2 OF 2	D7	MO GATE	2	2	B		VP	OC	24				
	"C" CHARGING PUMP MINIMUM RECIRCULATION ISOLATION VALVE														
2-CH-MOV-2286A	12050-CBM-095B	2 OF 2	E4	MO GATE	3	2	B		EV	C	03				
										O	03				
									ST	C	03				
										O	03				
									VP	OC	24				
	"A" CHARGING PUMP MAIN DISCHARGE ISOLATION VALVE														
2-CH-MOV-2286B	12050-CBM-095B	2 OF 2	E6	MO GATE	3	2	B		EV	C	03				
										O	03				
									ST	C	03				
										O	03				
									VP	OC	24				
	"B" CHARGING PUMP MAIN DISCHARGE ISOLATION VALVE														
2-CH-MOV-2286C	12050-CBM-095B	2 OF 2	E7	MO GATE	3	2	B		EV	C	03				
										O	03				
									ST	C	03				
										O	03				
									VP	OC	24				
	"C" CHARGING PUMP MAIN DISCHARGE ISOLATION VALVE														
2-CH-MOV-2287A	12050-CBM-095B	2 OF 2	D4	MO GATE	3	2	B		EV	C	03				
										O	03				
									ST	C	03				
										O	03				
									VP	OC	24				
	"A" CHARGING PUMP ALTERNATE AND LOOP FILL DISCHARGE ISOLATION VALVE														
2-CH-MOV-2287B	12050-CBM-095B	2 OF 2	D6	MO GATE	3	2	B		EV	C	03				
										O	03				
									ST	C	03				
										O	03				

NORTH ANNA UNIT 2
FOURTH INSERVICE TESTING INTERVAL
VALVE INSERVICE TEST TABLE

VALVE NUMBER	DRAWING NUMBER	SHEET	COOR	VALVE TYPE	VALVE SIZE	ASME CLASS	ISTC CAT	ISO VALVE TYPE	TEST TYPE	TEST POS	TEST FREQ	RE REQ V-	CS JUST CSV-	RR JUST RRV-	NC ALT TEST VNC-
2-CH-MOV-2287B	12050-CBM-095B	2 OF 2	D6	MO GATE	3	2	B		VP	OC	24				
	"B" CHARGING PUMP ALTERNATE AND LOOP FILL DISCHARGE ISOLATION VALVE														
2-CH-MOV-2287C	12050-CBM-095B	2 OF 2	D7	MO GATE	3	2	B		EV	C	03				
										O	03				
									ST	C	03				
										O	03				
									VP	OC	24				
	"C" CHARGING PUMP ALTERNATE AND LOOP FILL DISCHARGE ISOLATION VALVE														
2-CH-MOV-2289A	12050-CBM-095C	1 OF 2	C4	MO GATE	3	1	B		EV	C	CS		5		
									ST	C	CS		5		
									VP	OC	24				
	MAIN CHARGING HEADER ISOLATION VALVE, OUTSIDE CONTAINMENT ISOLATION VALVE														
2-CH-MOV-2289B	12050-CBM-095C	1 OF 2	B3	MO GATE	3	2	B		EV	C	CS		5		
									ST	C	CS		5		
									VP	OC	24				
	MAIN CHARGING HEADER ISOLATION VALVE, OUTSIDE CONTAINMENT														
2-CH-MOV-2350	12050-CBM-095B	1 OF 2	B5	MO GATE	2	3	B		EV	O	CS		2		
									ST	O	CS		2		
									VP	OC	24				
	EMERGENCY BORATION TO CHARGING PUMP SUCTION														
2-CH-MOV-2373	12050-CBM-095B	1 OF 2	A8	MO GATE	3	2	E		VP	OC	24				
	CHARGING PUMP RECIRCULATION HEADER ISOLATION VALVE														
2-CH-MOV-2380	12050-CBM-095C	2 OF 2	F4	MO GATE	3	2	A	CIV	EV	C	CS		17		
									LT	C	OPB				
									ST	C	CS		17		
									VP	OC	24				
	REACTOR COOLANT PUMP SEAL WATER RETURN, INSIDE CONTAINMENT ISOLATION VALVE														

NORTH ANNA UNIT 2
FOURTH INSERVICE TESTING INTERVAL
VALVE INSERVICE TEST TABLE

VALVE NUMBER	DRAWING NUMBER	SHEET	COOR	VALVE TYPE	VALVE SIZE	ASME CLASS	ISTC CAT	ISO VALVE TYPE	TEST TYPE	TEST POS	TEST FREQ	RE REQ V-	CS JUST CSV-	RR. JUST RRV-	NC ALT TEST VNC-
2-CH-MOV-2381	12050-CBM-095B	1 OF 2	C8	MO GATE	3	2	A	CIV	EV	C	CS		17		
									LT	C	OPB				
									ST	C	CS		17		
									VP	OC	24				
	REACTOR COOLANT PUMP SEAL WATER RETURN, OUTSIDE CONTAINMENT ISOLATION VALVE														
2-CH-RV-2203	12050-CBM-095C	1 OF 2	F3	RELIEF VALVE	2	2	C		SP	O	120	3			
	LETDOWN RELIEF VLV DOWNSTREAM OF REGEN HX, RV DISCHARGE TO PRESSURIZER RELIEF TANK														
2-CH-RV-2382A	12050-CBM-095C	2 OF 2	F5	RELIEF VALVE	2	2	C		SP	O	120	3			
	CONTAINMENT PENETRATION 19 RELIEF VALVE - RCP SEAL WATER RETURN PIPING														
2-CH-RV-2382B	12050-CBM-095B	1 OF 2	C7	RELIEF VALVE	2	2	C		SP	O	120	3			
	SEAL WATER HEAT EXCHANGER RELIEF VALVE, RV DISCHARGE TO VOLUME CONTROL TANK														
2-CH-TV-2204A	12050-CBM-095C	1 OF 2	E3	AO GLOBE	2	2	A	CIV	EV	C	CS		3		
									FS	C	CS		3		
									LT	C	OPB				
									ST	C	CS		3		
									VP	OC	24				
	LETDOWN CONTROL FROM REGEN HX, INSIDE CONTAINMENT ISOLATION VALVE														
2-CH-TV-2204B	12050-CBM-095A	2 OF 2	C3	AO GLOBE	3	2	A	CIV	EV	C	CS		3		
									FS	C	CS		3		
									LT	C	OPB				
									ST	C	CS		3		
									VP	OC	24				
	LETDOWN CONTROL FROM REGEN HX, OUTSIDE CONTAINMENT ISOLATION VALVE														

NORTH ANNA UNIT 2
FOURTH INSERVICE TESTING INTERVAL
VALVE INSERVICE TEST TABLE

VALVE NUMBER	DRAWING NUMBER	SHEET	COOR	VALVE TYPE	VALVE SIZE	ASME CLASS	ISTC CAT	ISO VALVE TYPE	TEST TYPE	TEST POS	TEST FREQ	RE REQ V-	CS JUST CSV-	RR JUST RRV-	NC ALT TEST VNC-
2-CV-004	12050-CBM-092A	2 OF 2	A5	MANUAL GATE	8	2	AE	CIV	LT	C	OPB				
	CONTAINMENT VACUUM EJECTOR SUPPLY, OUTSIDE CONTAINMENT ISOLATION VALVE														
2-CV-TV-200	12050-CBM-092A	2 OF 2	A3	AO BFLY	8	2	AE	CIV	LT	C	OPB				
									VP	OC	24				
	CONTAINMENT VACUUM EJECTOR, INSIDE CONTAINMENT ISOLATION VALVE														
2-CV-TV-250A	12050-CBM-092A	2 OF 2	B4	AO GLOBE	2	2	A	CIV	EV	C	03				
									FS	C	03				
									LT	C	OPB				
									ST	C	03				
									VP	OC	24				
	"A" CONTAINMENT VACUUM PUMP SUCTION ISOLATION VALVE, OUTSIDE CONTAINMENT ISOLATION VALVE														
2-CV-TV-250B	12050-CBM-092A	2 OF 2	B5	AO GLOBE	2	2	A	CIV	EV	C	03				
									FS	C	03				
									LT	C	OPB				
									ST	C	03				
									VP	OC	24				
	"A" CONTAINMENT VACUUM PUMP SUCTION ISOLATION VALVE, OUTSIDE CONTAINMENT ISOLATION VALVE														
2-CV-TV-250C	12050-CBM-092A	2 OF 2	C4	AO GLOBE	2	2	A	CIV	EV	C	03				
									FS	C	03				
									LT	C	OPB				
									ST	C	03				
									VP	OC	24				

NORTH ANNA UNIT 2
FOURTH INSERVICE TESTING INTERVAL
VALVE INSERVICE TEST TABLE

VALVE NUMBER	DRAWING NUMBER	SHEET	COOR	VALVE TYPE	VALVE SIZE	ASME CLASS	ISTC CAT	ISO VALVE TYPE	TEST TYPE	TEST POS	TEST FREQ	RE REQ V-	CS JUST CSV-	RR JUST RRV-	NC ALT TEST VNC-
	"B" CONTAINMENT VACUUM PUMP SUCTION ISOLATION VALVE, OUTSIDE CONTAINMENT ISOLATION VALVE														
2-CV-TV-250D	12050-CBM-092A	2 OF 2	C5	AO GLOBE	2	2	A	CIV	EV	C	03				
									FS	C	03				
									LT	C	OPB				
									ST	C	03				
									VP	OC	24				
	"B" CONTAINMENT VACUUM PUMP SUCTION ISOLATION VALVE, OUTSIDE CONTAINMENT ISOLATION VALVE														

NORTH ANNA UNIT 2
FOURTH INSERVICE TESTING INTERVAL
VALVE INSERVICE TEST TABLE

VALVE NUMBER	DRAWING NUMBER	SHEET	COOR	VALVE TYPE	VALVE SIZE	ASME CLASS	ISTC CAT	ISO VALVE TYPE	TEST TYPE	TEST POS	TEST FREQ	RE REQ V-	CS JUST CSV-	RR JUST RRV-	NC ALT TEST VNC-
2-DA-007	12050-CBM-090A	3 OF 3	E3	MAN DIAPHRAGM	2	2	AE	CIV	LT	C	OPB				
	VENT LINE FROM PRIMARY VENT POT, INSIDE CONTAINMENT ISOLATION VALVE														
2-DA-009	12050-CBM-090A	3 OF 3	D3	MAN DIAPHRAGM	2	2	AE	CIV	LT	C	OPB				
	VENT LINE FROM PRIMARY VENT POT, OUTSIDE CONTAINMENT ISOLATION VALVE														
2-DA-TV-200A	12050-CBM-090B	1 OF 1	E7	AO GLOBE	2	2	A	CIV	EV	C	03				
									FS	C	03				
									LT	C	OPB				
									ST	C	03				
									VP	OC	24				
	REACTOR CONTAINMENT SUMP PUMPS DISCHARGE, OUTSIDE CONTAINMENT ISOLATION VALVE														
2-DA-TV-200B	12050-CBM-090A	3 OF 3	C3	AO GLOBE	2	2	A	CIV	EV	C	03				
									FS	C	03				
									LT	C	OPB				
									ST	C	03				
									VP	OC	24				
	REACTOR CONTAINMENT SUMP PUMPS DISCHARGE, INSIDE CONTAINMENT ISOLATION VALVE														
2-DA-TV-203A	12050-CBM-090A	3 OF 3	B7	AO GLOBE	2	2	A	CIV	EV	C	03				
									FS	C	03				
									LT	C	OPB				
									ST	C	03				
									VP	OC	24				
	POST ACCIDENT SAMPLE SYSTEM RETURN, OUTSIDE CONTAINMENT ISOLATION VALVE														
2-DA-TV-203B	12050-CBM-090A	3 OF 3	B8	AO GLOBE	2	2	A	CIV	EV	C	03				
									FS	C	03				
									LT	C	OPB				
									ST	C	03				
									VP	OC	24				
	POST ACCIDENT SAMPLE SYSTEM RETURN, OUTSIDE CONTAINMENT TRIP VALVE														

NORTH ANNA UNIT 2
FOURTH INSERVICE TESTING INTERVAL
VALVE INSERVICE TEST TABLE

VALVE NUMBER	DRAWING NUMBER	SHEET	COOR	VALVE TYPE	VALVE SIZE	ASME CLASS	ISTC CAT	ISO VALVE TYPE	TEST TYPE	TEST POS	TEST FREQ	RE REQ V-	CS JUST CSV-	RR JUST RRV-	NC ALT TEST VNC-
2-DG-TV-200A	12050-CBM-090A	1 OF 3	B8	AO GLOBE	2	2	A	CIV	EV	C	03				
									FS	C	03				
									LT	C	OPB				
									ST	C	03				
									VP	OC	24				
	PRIMARY DRAIN TRANSFER PUMPS DISCHARGE, OUTSIDE CONTAINMENT ISOLATION VALVE														
2-DG-TV-200B	12050-CBM-090A	1 OF 3	B7	AO GLOBE	2	2	A	CIV	EV	C	03				
									FS	C	03				
									LT	C	OPB				
									ST	C	03				
									VP	OC	24				
	PRIMARY DRAIN TRANSFER PUMPS DISCHARGE, INSIDE CONTAINMENT ISOLATION VALVE														

NORTH ANNA UNIT 2
FOURTH INSERVICE TESTING INTERVAL
VALVE INSERVICE TEST TABLE

VALVE NUMBER	DRAWING NUMBER	SHEET	COOR	VALVE TYPE	VALVE SIZE	ASME CLASS	ISTC CAT	ISO VALVE TYPE	TEST TYPE	TEST POS	TEST FREQ	RE REQ V-	CS JUST CSV-	RR JUST RRV-	NC ALT TEST VNC-
2-EB-015	12050-FM -107A	1 OF 4	E5	CHECK VALVE	1.5	NC	C		CV	C	18			34	
										O	18			34	
	2H DIESEL "HA" AIR RECEIVER TANK DISCHARGE VALVE														
2-EB-034	12050-FM -107A	3 OF 4	E5	CHECK VALVE	1.5	NC	C		CV	C	18			34	
										O	18			34	
	2J DIESEL "JA" AIR RECEIVER TANK DISCHARGE VALVE														
2-EB-041	12050-FM -107A	1 OF 4	D5	CHECK VALVE	0.75	NC	AC		CV	C	03				
										O	03				
									LT	C	24				
	2H DIESEL "HA" AIR RECEIVER TANK ISOLATION VALVE														
2-EB-051	12050-FM -107A	3 OF 4	D5	CHECK VALVE	0.75	NC	AC		CV	C	03				
										O	03				
									LT	C	24				
	2J DIESEL "JA" AIR RECEIVER TANK ISOLATION VALVE														
2-EB-061	12050-FM -107A	2 OF 4	E6	CHECK VALVE	1.5	NC	C		CV	C	18			34	
										O	18			34	
	2H DIESEL "HB" AIR RECEIVER TANK DISCHARGE VALVE														
2-EB-068	12050-FM -107A	2 OF 4	D6	CHECK VALVE	0.75	NC	AC		CV	C	03				
										O	03				
									LT	C	24				
	2H DIESEL "HB" AIR RECEIVER TANK ISOLATION VALVE														
2-EB-078	12050-FM -107A	4 OF 4	E6	CHECK VALVE	1.5	NC	C		CV	C	18			34	
										O	18			34	
	2J DIESEL "JB" AIR RECEIVER TANK DISCHARGE VALVE														
2-EB-085	12050-FM -107A	4 OF 4	D6	CHECK VALVE	0.75	NC	AC		CV	C	03				
										O	03				
									LT	C	24				

NORTH ANNA UNIT 2
FOURTH INSERVICE TESTING INTERVAL
VALVE INSERVICE TEST TABLE

VALVE NUMBER	DRAWING NUMBER	SHEET	COOR	VALVE TYPE	VALVE SIZE	ASME CLASS	ISTC CAT	ISO VALVE TYPE	TEST TYPE	TEST POS	TEST FREQ	RE REQ V-	CS JUST CSV-	RR JUST RRV-	NC ALT TEST VNC-
	2J DIESEL "JB" AIR RECEIVER TANK ISOLATION VALVE														

NORTH ANNA UNIT 2
FOURTH INSERVICE TESTING INTERVAL
VALVE INSERVICE TEST TABLE

VALVE NUMBER	DRAWING NUMBER	SHEET	COOR	VALVE TYPE	VALVE SIZE	ASME CLASS	ISTC CAT	ISO VALVE TYPE	TEST TYPE	TEST POS	TEST FREQ	RE REQ V-	CS JUST CSV-	RR JUST RRV-	NC ALT TEST VNC-
2-EG-260	11715-FB -035A	2 OF 2	C7	CHECK VALVE	1.5	NC	C		CV	C O	RR 03			38	
	2H DIESEL "A" EMERGENCY GENERATOR PUMP DISCHARGE CHECK VALVE														
2-EG-272	11715-FB -035A	2 OF 2	F7	CHECK VALVE	1.5	NC	C		CV	C O	RR 03			38	
	2J DIESEL "A" EMERGENCY GENERATOR PUMP DISCHARGE CHECK VALVE														
2-EG-284	11715-FB -035A	2 OF 2	F6	CHECK VALVE	1.5	NC	C		CV	C O	RR 03			38	
	2J DIESEL "B" EMERGENCY GENERATOR PUMP DISCHARGE CHECK VALVE														
2-EG-289	11715-FB -035A	2 OF 2	C6	CHECK VALVE	1.5	NC	C		CV	C O	RR 03			38	
	2H DIESEL "B" EMERGENCY GENERATOR PUMP DISCHARGE CHECK VALVE														
2-EG-RV-204A	11715-FB -035A	2 OF 2	C7	RELIEF VALVE	1	NC	C		SP	O	120				4, 5
	2H DIESEL "A" EMER GENERATOR PUMP DISCHARGE RELIEF VALVE, RV DISCHARGE TO PUMP SUCTION														
2-EG-RV-204B	11715-FB -035A	2 OF 2	C6	RELIEF VALVE	1	NC	C		SP	O	120				4, 5
	2H DIESEL "B" EMER GENERATOR PUMP DISCHARGE RELIEF VALVE, RV DISCHARGE TO PUMP SUCTION														
2-EG-RV-206A	11715-FB -035A	2 OF 2	F7	RELIEF VALVE	1	NC	C		SP	O	120				4, 5
	2J DIESEL "A" EMER GENERATOR PUMP DISCHARGE RELIEF VALVE, RV DISCHARGE TO PUMP SUCTION														
2-EG-RV-206B	11715-FB -035A	2 OF 2	F6	RELIEF VALVE	1	NC	C		SP	O	120				4, 5
	2J DIESEL "B" EMER GENERATOR PUMP DISCHARGE RELIEF VALVE, RV DISCHARGE TO PUMP SUCTION														
2-EG-RV-702HA	12050-FM -107A	1 OF 4	E3	RELIEF VALVE	0.5	NC	C		SP	O	120				5
	2H DIESEL "A" AIR RECEIVER TANK RELIEF VALVE, RV DISCHARGE TO ATMOSPHERE														
2-EG-RV-702HB	12050-FM -107A	2 OF 4	E4	RELIEF VALVE	0.5	NC	C		SP	O	120				5
	2H DIESEL "B" AIR RECEIVER TANK RELIEF VALVE, RV DISCHARGE TO ATMOSPHERE														
2-EG-RV-702JA	12050-FM -107A	3 OF 4	E3	RELIEF VALVE	0.5	NC	C		SP	O	120				5

NORTH ANNA UNIT 2
FOURTH INSERVICE TESTING INTERVAL
VALVE INSERVICE TEST TABLE

VALVE NUMBER	DRAWING NUMBER	SHEET	COOR	VALVE TYPE	VALVE SIZE	ASME CLASS	ISTC CAT	ISO VALVE TYPE	TEST TYPE	TEST POS	TEST FREQ	RE REQ V-	CS JUST CSV-	RR JUST RRV-	NC ALT TEST VNC-
	2J DIESEL "A" AIR RECEIVER TANK RELIEF VALVE, RV DISCHARGE TO ATMOSPHERE														
2-EG-RV-702JB	12050-FM -107A	4 OF 4	E4	RELIEF VALVE	0.5	NC	C		SP	O	120				5
	2J DIESEL "B" AIR RECEIVER TANK RELIEF VALVE, RV DISCHARGE TO ATMOSPHERE														
2-EG-SOV-700HA	12050-FM -107A	1 OF 4	E5	SO GATE	1.5	NC	B		EV	O	03				
									ST	O	03				2
	DIESEL AIR START SOLENOID VALVE														
2-EG-SOV-700HB	12050-FM -107A	2 OF 4	E6	SO GATE	1.5	NC	B		EV	O	03				
									ST	O	03				2
	DIESEL AIR START SOLENOID VALVE														
2-EG-SOV-700JA	12050-FM -107A	3 OF 4	E6	SO GATE	1.5	NC	B		EV	O	03				
									ST	O	03				2
	DIESEL AIR START SOLENOID VALVE														
2-EG-SOV-700JB	12050-FM -107A	4 OF 4	E6	SO GATE	1.5	NC	B		EV	O	03				
									ST	O	03				2
	DIESEL AIR START SOLENOID VALVE														
2-EG-SOV-701HA	12050-FM -107A	1 OF 4	E6	SO GATE	0.25	NC	B		EV	O	03				
									ST	O	03				2
	DIESEL AIR START SOLENOID VALVE														
2-EG-SOV-707JA	12050-FM -107A	3 OF 4	E6	SO GATE	0.25	NC	B		EV	O	03				
									ST	O	03				2
	DIESEL AIR START SOLENOID VALVE														

NORTH ANNA UNIT 2
FOURTH INSERVICE TESTING INTERVAL
VALVE INSERVICE TEST TABLE

VALVE NUMBER	DRAWING NUMBER	SHEET	COOR	VALVE TYPE	VALVE SIZE	ASME CLASS	ISTC CAT	ISO VALVE TYPE	TEST TYPE	TEST POS	TEST FREQ	RE REQ V-	CS JUST CSV-	RR JUST RRV-	NC ALT TEST VNC-
2-FP-079	12050-CBB-104A	1 OF 1	A7	CHECK VALVE	4	2	AC	CIV	CV	C	RR			3	
										O	RR			3	
									LT	C	OPB				
	FIRE PROTECTION SUPPLY TO CONTAINMENT, INSIDE CONTAINMENT ISOLATION CHECK VALVE														
2-FP-081	12050-CBB-104A	1 OF 1	A6	MANUAL GATE	4	2	AE	CIV	LT	C	OPB				
	FIRE PROTECTION SUPPLY TO CONTAINMENT, OUTSIDE CONTAINMENT ISOLATION VALVE														

NORTH ANNA UNIT 2
FOURTH INSERVICE TESTING INTERVAL
VALVE INSERVICE TEST TABLE

VALVE NUMBER	DRAWING NUMBER	SHEET	COOR	VALVE TYPE	VALVE SIZE	ASME CLASS	ISTC CAT	ISO VALVE TYPE	TEST TYPE	TEST POS	TEST FREQ	RE REQ V-	CS JUST CSV-	RR JUST RRV-	NC ALT TEST VNC-
2-FW-062	12050-CBM-074A	1 OF 4	E6	CHECK VALVE	16	2	C		CV	C	CS		21		
										O	CS	TP-01	21		
	"A" MAIN FEEDWATER SUPPLY, CONTAINMENT PENETRATION CHECK VALVE														
2-FW-063	12050-CBM-074A	1 OF 4	B5	CHECK VALVE	3	3	C		CV	C	CS		22		
										O	CS		22		
	STANDBY "A" AUXILIARY FEEDWATER HEADER CHECK VALVE, OUTSIDE OF CONTAINMENT														
2-FW-064	12050-CBM-074A	1 OF 4	B5	MANUAL GATE	3	3	B		EV	C	24				
										O	24				
	AUXILIARY FEEDWATER HEADER MANUAL ISOLATION VALVE FROM MOTOR-DRIVEN PUMP HEADERS														
2-FW-065	12050-CBM-074A	1 OF 4	B6	CHECK VALVE	3	3	C		CV	C	CS		22		
										O	CS		22		
	STANDBY "A" AUXILIARY FEEDWATER HEADER CHECK VALVE, OUTSIDE OF CONTAINMENT														
2-FW-066	12050-CBM-074A	1 OF 4	B6	MANUAL GATE	3	3	B		EV	C	24				
										O	24				
	AUXILIARY FEEDWATER HEADER MANUAL ISOLATION VALVE FROM MOTOR-DRIVEN PUMP HEADERS														
2-FW-070	12050-CBM-074A	1 OF 4	D6	CHECK VALVE	3	2	C		CV	C	CS		23		
										O	03				
	"A" AUXILIARY FEEDWATER HEADERCHECK VALVE AT MAIN FEEDWATER HEADER														
2-FW-094	12050-CBM-074A	1 OF 4	D6	CHECK VALVE	16	2	C		CV	C	CS		21		
										O	CS	TP-01	21		
	"B" MAIN FEEDWATER HEADER SUPPLY, CONTAINMENT PENETRATION CHECK VALVE														
2-FW-095	12050-CBM-074A	1 OF 4	B6	CHECK VALVE	3	3	C		CV	C	CS		22		
										O	03				
	"B" AUXILIARY FEEDWATER HEADER CHECK VALVE, OUTSIDE OF CONTAINMENT														
2-FW-096	12050-CBM-074A	1 OF 4	B6	MANUAL GATE	3	3	B		EV	C	24				
										O	24				

NORTH ANNA UNIT 2
FOURTH INSERVICE TESTING INTERVAL
VALVE INSERVICE TEST TABLE

VALVE NUMBER	DRAWING NUMBER	SHEET	COOR	VALVE TYPE	VALVE SIZE	ASME CLASS	ISTC CAT	ISO VALVE TYPE	TEST TYPE	TEST POS	TEST FREQ	RE REQ V-	CS JUST CSV-	RR JUST RRV-	NC ALT TEST VNC-
	AUXILIARY FEEDWATER HEADER MANUAL ISOLATION VALVE FROM MOTOR-DRIVEN PUMP HEADERS														
2-FW-097	12050-CBM-074A	1 OF 4	B6	CHECK VALVE	3	3	C		CV	C O	CS CS		22 22		
	"B" AUXILIARY FEEDWATER HEADER CHECK VALVE AT MAIN FEEDWATER HEADER														
2-FW-098	12050-CBM-074A	1 OF 4	B6	MANUAL GATE	3	3	B		EV	C O	24 24				
	AUXILIARY FEEDWATER HEADER MANUAL ISOLATION VALVE FROM MOTOR-DRIVEN PUMP HEADERS														
2-FW-102	12050-CBM-074A	1 OF 4	C6	CHECK VALVE	3	2	C		CV	C O	CS 03		23		
	"B" AUXILARY FEEDWATER HEADER CHECK VALVE AT MAIN FEEDWATER HEADER														
2-FW-126	12050-CBM-074A	1 OF 4	B6	CHECK VALVE	16	2	C		CV	C O	CS CS	 TP-01	21 21		
	"C" MAIN FEEDWATER SUPPLY, CONTAINMENT PENETRATION CHECK VALVE														
2-FW-127	12050-CBM-074A	1 OF 4	B7	CHECK VALVE	3	3	C		CV	C O	CS CS		22 22		
	STANDBY "C" AUXILIARY FEEDWATER HEADER CHECK VALVE, OUTSIDE OF CONTAINMENT														
2-FW-128	12050-CBM-074A	1 OF 4	B7	MANUAL GATE	3	3	B		EV	C O	24 24				
	AUXILIARY FEEDWATER HEADER MANUAL ISOLATION VALVE FROM MOTOR-DRIVEN PUMP HEADERS														
2-FW-129	12050-CBM-074A	1 OF 4	B7	CHECK VALVE	3	3	C		CV	C O	CS 03		22		
	"C" AUXILIARY FEEDWATER HEADER CHECK VALVE, OUTSIDE OF CONTAINMENT														
2-FW-130	12050-CBM-074A	1 OF 4	B7	MANUAL GATE	3	3	B		EV	C O	24 24				
	AUXILIARY FEEDWATER HEADER MANUAL ISOLATION VALVE FROM MOTOR-DRIVEN PUMP HEADERS														
2-FW-134	12050-CBM-074A	1 OF 4	B7	CHECK VALVE	3	2	C		CV	C	CS		23		

NORTH ANNA UNIT 2
FOURTH INSERVICE TESTING INTERVAL
VALVE INSERVICE TEST TABLE

VALVE NUMBER	DRAWING NUMBER	SHEET	COOR	VALVE TYPE	VALVE SIZE	ASME CLASS	ISTC CAT	ISO VALVE TYPE	TEST TYPE	TEST POS	TEST FREQ	RE REQ V-	CS JUST CSV-	RR JUST RRV-	NC ALT TEST VNC-
2-FW-134	12050-CBM-074A	1 OF 4	B7	CHECK VALVE	3	2	C		CV	O	03				
	"C" AUXILIARY FEEDWATER HEADER CHECK VALVE AT MAIN FEEDWATER HEADER														
2-FW-147	12050-CBM-074A	3 OF 4	B7	MANUAL GATE	6	3	B		EV	O	24				
	ALTERNATE WATER SUPPLY TO AFW PUMP SUCTIONS														
2-FW-150	12050-CBM-074A	3 OF 4	D7	CHECK VALVE	1	3	C		CV	C O	CS 03		22		
	TURBINE DRIVEN AUXILIARY FEEDWATER PUMP RECIRC LINE CHECK VALVE														
2-FW-156	12050-CBM-074A	3 OF 4	D8	CHECK VALVE	6	3	C		CV	C O	CS 03		24		
	TURBINE DRIVEN AUXILIARY FEEDWATER PUMP DISCHARGE CHECK VALVE														
2-FW-157	12050-CBM-074A	3 OF 4	E7	MANUAL GATE	6	3	B		EV	C O	24 24				
	AFW PUMP DISCHARGE HEADER ALIGNMENT/CROSS CONNECT VALVE														
2-FW-164	12050-CBM-074A	3 OF 4	B6	MANUAL GATE	4	3	B		EV	O	24				
	ALTERNATE WATER SUPPLY TO AFW PUMP SUCTIONS														
2-FW-167	12050-CBM-074A	3 OF 4	D6	CHECK VALVE	1	3	C		CV	C O	CS 03		22		
	"A" MOTOR DRIVEN AUXILIARY FEEDWATER PUMP RECIRC LINE CHECK VALVE														
2-FW-172	12050-CBM-074A	3 OF 4	D6	CHECK VALVE	4	3	C		CV	C O	CS 03		24		
	"A" MOTOR DRIVEN AUXILIARY FEEDWATER PUMP DISCHARGE CHECK VALVE														
2-FW-173	12050-CBM-074A	3 OF 4	E6	MANUAL GATE	4	3	B		EV	C O	24 24				
	AFW PUMP DISCHARGE HEADER ALIGNMENT/CROSS CONNECT VALVE														
2-FW-174	12050-CBM-074A	3 OF 4	E6	MANUAL GATE	4	3	B		EV	C O	24 24				

NORTH ANNA UNIT 2
FOURTH INSERVICE TESTING INTERVAL
VALVE INSERVICE TEST TABLE

VALVE NUMBER	DRAWING NUMBER	SHEET	COOR	VALVE TYPE	VALVE SIZE	ASME CLASS	ISTC CAT	ISO VALVE TYPE	TEST TYPE	TEST POS	TEST FREQ	RE REQ V-	CS JUST CSV-	RR JUST RRV-	NC ALT TEST VNC-
	AFW PUMP DISCHARGE HEADER ALIGNMENT/CROSS CONNECT VALVE														
2-FW-182	12050-CBM-074A ALTERNATE WATER SUPPLY TO AFW PUMP SUCTIONS	3 OF 4	B5	MANUAL GATE	4	3	B		EV	O	24				
2-FW-185	12050-CBM-074A "B" MOTOR DRIVEN AUXILIARY FEEDWATER PUMP RECIRC LINE CHECK VALVE	3 OF 4	D5	CHECK VALVE	1	3	C		CV	C O	CS 03		22		
2-FW-192	12050-CBM-074A "B" MOTOR DRIVEN AUXILIARY FEEDWATER PUMP DISCHARGE CHECK VALVE	3 OF 4	D5	CHECK VALVE	4	3	C		CV	C O	CS 03		24		
2-FW-193	12050-CBM-074A AFW PUMP DISCHARGE HEADER ALIGNMENT/CROSS CONNECT VALVE	3 OF 4	E5	MANUAL GATE	4	3	B		EV	C O	24 24				
2-FW-194	12050-CBM-074A AFW PUMP DISCHARGE HEADER ALIGNMENT/CROSS CONNECT VALVE	3 OF 4	E5	MANUAL GATE	4	3	B		EV	C O	24 24				
2-FW-202	12050-CBM-074A SERVICE WATER SUPPLY TO AFW PUMP SUCTIONS	3 OF 4	A7	MANUAL GATE	6	3	B		EV	O	24				
2-FW-279	12050-CBM-074A "A" AUXILIARY FEEDWATER HEADER CHECK VALVE, OUTSIDE OF CONTAINMENT	3 OF 4	D8	CHECK VALVE	4	3	C		CV	C O	CS 03		22		
2-FW-317	12050-CBM-074A AFW PUMP DISCHARGE HEADER ALIGNMENT/CROSS CONNECT VALVE	3 OF 4	E8	MANUAL GATE	6	3	B		EV	C O	24 24				
2-FW-609	12050-CBM-074A	3 OF 4	D7	CHECK VALVE	1	3	C		CV	C O	RR 03			39	

NORTH ANNA UNIT 2
FOURTH INSERVICE TESTING INTERVAL
VALVE INSERVICE TEST TABLE

VALVE NUMBER	DRAWING NUMBER	SHEET	COOR	VALVE TYPE	VALVE SIZE	ASME CLASS	ISTC CAT	ISO VALVE TYPE	TEST TYPE	TEST POS	TEST FREQ	RE REQ V-	CS JUST CSV-	RR JUST RRV-	NC ALT TEST VNC-
	PUMP LUBE OIL COOLER CHECK VALVE														
2-FW-610	12050-CBM-074A	3 OF 4	E6	CHECK VALVE	1	3	C		CV	C	RR			39	
										O	03				
	PUMP LUBE OIL COOLER CHECK VALVE														
2-FW-611	12050-CBM-074A	3 OF 4	E6	CHECK VALVE	1	3	C		CV	C	RR			39	
										O	03				
	PUMP LUBE OIL COOLER CHECK VALVE														
2-FW-FCV-2478	12050-CBM-074A	1 OF 4	E4	AO GATE	16	NC	B		EV	C	CS		6		
									FS	C	CS		6		
									ST	C	CS				3
									VP	OC	24				
	"A" MAIN FEEDWATER REG VALVE														
2-FW-FCV-2479	12050-CBM-074A	1 OF 4	F4	AO GLOBE	6	NC	B		EV	C	CS		6		
									FS	C	CS		6		
									ST	C	CS				3
	"A" BYPASS FEEDWATER REG VALVE														
2-FW-FCV-2488	12050-CBM-074A	1 OF 4	D4	AO GATE	16	NC	B		EV	C	CS		6		
									FS	C	CS		6		
									ST	C	CS				3
									VP	OC	24				
	"B" MAIN FEEDWATER REG VALVE														
2-FW-FCV-2489	12050-CBM-074A	1 OF 4	D4	AO GLOBE	6	NC	B		EV	C	CS		6		
									FS	C	CS		6		
									ST	C	CS				3
	"B" BYPASS FEEDWATER REG VALVE														
2-FW-FCV-2498	12050-CBM-074A	1 OF 4	B4	AO GATE	16	NC	B		EV	C	CS		6		
									FS	C	CS		6		
									ST	C	CS				3

NORTH ANNA UNIT 2
FOURTH INSERVICE TESTING INTERVAL
VALVE INSERVICE TEST TABLE

VALVE NUMBER	DRAWING NUMBER	SHEET	COOR	VALVE TYPE	VALVE SIZE	ASME CLASS	ISTC CAT	ISO VALVE TYPE	TEST TYPE	TEST POS	TEST FREQ	RE REQ V-	CS JUST CSV-	RR JUST RRV-	NC ALT TEST VNC-
2-FW-FCV-2498	12050-CBM-074A	1 OF 4	B4	AO GATE	16	NC	B		VP	OC	24				
	"C" MAIN FEEDWATER REG VALVE														
2-FW-FCV-2499	12050-CBM-074A	1 OF 4	C4	AO GLOBE	6	NC	B		EV	C	CS		6		
									FS	C	CS		6		
									ST	C	CS				3
	"C" BYPASS FEEDWATER REG VALVE														
2-FW-HCV-200A	12050-CBM-074A	1 OF 4	A6	AO GLOBE	3	3	B		EV	O	CS		19		
										P	03		19		
									FS	O	CS		19		
									ST	O	NA	2			
									VP	OC	24				
	STANDBY AUXILIARY FEEDWATER SUPPLY TO "A" STEAM GENERATOR														
2-FW-HCV-200B	12050-CBM-074A	1 OF 4	A6	AO GLOBE	3	3	B		EV	O	CS		19		
										P	03		19		
									FS	O	CS		19		
									ST	O	NA	2			
									VP	OC	24				
	STANDBY AUXILIARY FEEDWATER SUPPLY TO "B" STEAM GENERATOR														
2-FW-HCV-200C	12050-CBM-074A	1 OF 4	A7	AO GLOBE	3	3	B		EV	O	CS		19		
										P	03		19		
									FS	O	CS		19		
									ST	O	NA	2			
									VP	OC	24				
	NORMAL AUXILIARY FEEDWATER SUPPLY TO "C" STEAM GENERATOR														
2-FW-MOV-200A	12050-CBM-074A	1 OF 4	A5	MO GLOBE	3	3	B		EV	C	03				
										O	03				
									ST	C	03				
										O	03				
									VP	OC	24				

NORTH ANNA UNIT 2
FOURTH INSERVICE TESTING INTERVAL
VALVE INSERVICE TEST TABLE

VALVE NUMBER	DRAWING NUMBER	SHEET	COOR	VALVE TYPE	VALVE SIZE	ASME CLASS	ISTC CAT	ISO VALVE TYPE	TEST TYPE	TEST POS	TEST FREQ	RE REQ V-	CS JUST CSV-	RR JUST RRV-	NC ALT TEST VNC-
	STANDBY AUXILIARY FEEDWATER SUPPLY TO "A" STEAM GENERATOR														
2-FW-MOV-200B	12050-CBM-074A	1 OF 4	A6	MO GLOBE	3	3	B		EV	C	03				
										O	03				
									ST	C	03				
										O	03				
									VP	OC	24				
	NORMAL AUXILIARY FEEDWATER SUPPLY TO "B" STEAM GENERATOR														
2-FW-MOV-200C	12050-CBM-074A	1 OF 4	A7	MO GLOBE	3	3	B		EV	C	03				
										O	03				
									ST	C	03				
										O	03				
									VP	OC	24				
	STANDBY AUXILIARY FEEDWATER SUPPLY TO "C" STEAM GENERATOR														
2-FW-MOV-200D	12050-CBM-074A	3 OF 4	E8	MO GLOBE	3	3	B		EV	C	03				
										O	03				
									ST	C	03				
										O	03				
									VP	OC	24				
	NORMAL AUXILIARY FEEDWATER SUPPLY TO "A" STEAM GENERATOR														
2-FW-MOV-254A	12050-CBM-074A	1 OF 4	E3	MO GATE	16	NC	B		EV	C	CS		6		
									ST	C	CS		6		
									VP	OC	24				
	"A" MAIN FEEDWATER SUPPLY ISOLATION VALVE														
2-FW-MOV-254B	12050-CBM-074A	1 OF 4	D3	MO GATE	16	NC	B		EV	C	CS		6		
									ST	C	CS		6		
									VP	OC	24				
	"B" MAIN FEEDWATER SUPPLY ISOLATION VALVE														
2-FW-MOV-254C	12050-CBM-074A	1 OF 4	B3	MO GATE	16	NC	B		EV	C	CS		6		
									ST	C	CS		6		

NORTH ANNA UNIT 2
FOURTH INSERVICE TESTING INTERVAL
VALVE INSERVICE TEST TABLE

VALVE NUMBER	DRAWING NUMBER	SHEET	COOR	VALVE TYPE	VALVE SIZE	ASME CLASS	ISTC CAT	ISO VALVE TYPE	TEST TYPE	TEST POS	TEST FREQ	RE REQ V-	CS JUST CSV-	RR JUST RRV-	NC ALT TEST VNC-
2-FW-MOV-254C	12050-CBM-074A	1 OF 4	B3	MO GATE	16	NC	B		VP	OC	24				
	"C" MAIN FEEDWATER SUPPLY ISOLATION VALVE														
2-FW-PCV-259A	12050-CBM-074A	3 OF 4	F8	AO GLOBE	4	3	B		EV	O	CS		20		
										P	03		20		
									FS	O	CS		20		
									ST	O	NA	2			
									VP	OC	24				
	AUXILIARY FEEDWATER PRESSURE CONTROL VALVE														
2-FW-PCV-259B	12050-CBM-074A	3 OF 4	E8	A0 GLOBE	4	3	B		EV	O	CS		20		
										P	03		20		
									FS	O	CS		20		
									ST	O	NA	2			
									VP	OC	24				
	AUXILIARY FEEDWATER PRESSURE CONTROL VALVE														
2-FW-RV-200	12050-CBM-074A	3 OF 4	D8	RELIEF VALVE	3	3	C		SP	O	120	3			
	TURBINE DRIVEN AUXILIARY FEED PUMP FEEDWATER DISCHARGE RELIEF VALVE														

NORTH ANNA UNIT 2
FOURTH INSERVICE TESTING INTERVAL
VALVE INSERVICE TEST TABLE

VALVE NUMBER	DRAWING NUMBER	SHEET	COOR	VALVE TYPE	VALVE SIZE	ASME CLASS	ISTC CAT	ISO VALVE TYPE	TEST TYPE	TEST POS	TEST FREQ	RE REQ V-	CS JUST CSV-	RR JUST RRV-	NC ALT TEST VNC-
2-GN-101	11715-FM -105A	1 OF 3	B6	CHECK VALVE	0.5	NC	AC		CV	C	RR			29	
										O	RR			29	
									LT	C	24				
	BOTTLED NITROGEN SUPPLY TO PORV ISOLATION CHECK VALVE														
2-GN-102	11715-FM -105A	1 OF 3	B4	CHECK VALVE	0.5	NC	AC		CV	C	RR			29	
										O	RR			29	
									LT	C	24				
	BOTTLED NITROGEN SUPPLY TO PORV ISOLATION CHECK VALVE														
2-GN-RV-208A-1	11715-FM -105A	1 OF 3	B4	RELIEF VALVE	0.75	NC	C		SP	O	120				5
	BOTTLED NITROGEN SUPPLY TO PORV RELIEF VALVE														
2-GN-RV-208A-2	11715-FM -105A	1 OF 3	C5	RELIEF VALVE	0.75	NC	C		SP	O	120				5
	BOTTLED NITROGEN SUPPLY TO PORV RELIEF VALVE														
2-GN-RV-208A-3	11715-FM -105A	1 OF 3	C5	RELIEF VALVE	0.75	NC	C		SP	O	120				5
	BOTTLED NITROGEN SUPPLY TO PORV RELIEF VALVE														
2-GN-RV-208B-1	11715-FM -105A	1 OF 3	B7	RELIEF VALVE	0.75	NC	C		SP	O	120				5
	BOTTLED NITROGEN SUPPLY TO PORV RELIEF VALVE														
2-GN-RV-208B-2	11715-FM -105A	1 OF 3	C6	RELIEF VALVE	0.75	NC	C		SP	O	120				5
	BOTTLED NITROGEN SUPPLY TO PORV RELIEF VALVE														
2-GN-RV-208B-3	11715-FM -105A	1 OF 3	C6	RELIEF VALVE	0.75	NC	C		SP	O	120				5
	BOTTLED NITROGEN SUPPLY TO PORV RELIEF VALVE														

NORTH ANNA UNIT 2
FOURTH INSERVICE TESTING INTERVAL
VALVE INSERVICE TEST TABLE

VALVE NUMBER	DRAWING NUMBER	SHEET	COOR	VALVE TYPE	VALVE SIZE	ASME CLASS	ISTC CAT	ISO VALVE TYPE	TEST TYPE	TEST POS	TEST FREQ	RE-REQ V-	CS JUST CSV-	RR JUST RRV-	NC ALT TEST VNC-
2-HC-015	11715-CBM-106A	1 OF 4	E3	CHECK VALVE	2	2	AC	CIV	CV	C	RR			4	
										O	RR			4	
									LT	C	OPB				
	UNIT 2 RETURN LINE FROM UNIT 1 HYDROGEN ANALYZERS & RECOMB, INSIDE CONTAINMENT ISOLATION CHECK VALVE														
2-HC-020	11715-CBM-106A	2 OF 4	E4	CHECK VALVE	2	2	AC	CIV	CV	C	RR			4	
										O	RR			4	
									LT	C	OPB				
	UNIT 2 RETURN LINE FROM UNIT 2 HYDROGEN ANALYZERS & RECOMB, INSIDE CONTAINMENT ISOLATION CHECK VALVE														
2-HC-TV-200A	11715-CBM-106A	1 OF 4	E3	SO GLOBE	0.375	2	A	CIV	EV	C	03				
									FS	C	03				
									LT	C	OPB				
									ST	C	03				
									VP	OC	24				
	UNIT 2 SAMPLE LINE TO UNIT 1 HYDROGEN ANALYZERS, INSIDE CONTAINMENT ISOLATION VALVE														
2-HC-TV-200B	11715-CBM-106A	1 OF 4	E4	SO GLOBE	0.375	2	A	CIV	EV	C	03				
									FS	C	03				
									LT	C	OPB				
									ST	C	03				
									VP	OC	24				
	UNIT 2 SAMPLE LINE TO UNIT 1 HYDROGEN ANALYZERS, OUTSIDE CONTAINMENT ISOLATION VALVE														
2-HC-TV-201A	11715-CBM-106A	1 OF 4	D4	SO GLOBE	0.375	2	A	CIV	EV	C	03				
									FS	C	03				

NORTH ANNA UNIT 2
FOURTH INSERVICE TESTING INTERVAL
VALVE INSERVICE TEST TABLE

VALVE NUMBER	DRAWING NUMBER	SHEET	COOR	VALVE TYPE	VALVE SIZE	ASME CLASS	ISTC CAT	ISO VALVE TYPE	TEST TYPE	TEST POS	TEST FREQ	RE REQ V-	CS JUST CSV-	RR JUST RRV-	NC ALT TEST VNC-
2-HC-TV-201A	11715-CBM-106A	1 OF 4	D4	SO GLOBE	0.375	2	A	CIV	LT	C	OPB				
									ST	C	03				
									VP	OC	24				
	RETURN ISOLATION FROM UNIT 1 HYDROGEN ANALYZERS TO UNIT 2 CONTAINMENT,OUTSIDE CONT ISOL VALVE														
2-HC-TV-201B	11715-CBM-106A	1 OF 4	D4	SO GLOBE	0.375	2	A	CIV	EV	C	03				
									FS	C	03				
									LT	C	OPB				
									ST	C	03				
									VP	OC	24				
	RETURN ISOLATION FROM UNIT 1 HYDROGEN ANALYZERS TO UNIT 2 CONTAINMENT,OUTSIDE CONT ISOL VALVE														
2-HC-TV-202A	11715-CBM-106A	2 OF 4	E4	SO GLOBE	0.375	2	A	CIV	EV	C	03				
									FS	C	03				
									LT	C	OPB				
									ST	C	03				
									VP	OC	24				
	UNIT 2 SAMPLE LINE TO UNIT 2 HYDROGEN ANALYZERS, INSIDE CONTAINMENT ISOLATION VALVE														
2-HC-TV-202B	11715-CBM-106A	2 OF 4	E3	SO GLOBE	0.375	2	A	CIV	EV	C	03				
									FS	C	03				
									LT	C	OPB				
									ST	C	03				
									VP	OC	24				
	UNIT 2 SAMPLE LINE TO UNIT 2 HYDROGEN ANALYZERS, OUTSIDE CONTAINMENT ISOLATION VALVE														
2-HC-TV-203A	11715-CBM-106A	2 OF 4	D3	SO GLOBE	0.375	2	A	CIV	EV	C	03				

NORTH ANNA UNIT 2
FOURTH INSERVICE TESTING INTERVAL
VALVE INSERVICE TEST TABLE

VALVE NUMBER	DRAWING NUMBER	SHEET	COOR	VALVE TYPE	VALVE SIZE	ASME CLASS	ISTC CAT	ISO VALVE TYPE	TEST TYPE	TEST POS	TEST FREQ	RE REQ V-	CS JUST CSV-	RR JUST RRV-	NC ALT TEST VNC-
2-HC-TV-203A	11715-CBM-106A	2 OF 4	D3	SO GLOBE	0.375	2	A	CIV	FS	C	03				
									LT	C	OPB				
									ST	C	03				
									VP	OC	24				
	RETURN ISOLATION FROM UNIT 2 HYDROGEN ANALYZERS TO UNIT 2 CONTAINMENT,OUTSIDE CONTAINMENT ISOLATION VALVE														
2-HC-TV-203B	11715-CBM-106A	2 OF 4	D3	SO GLOBE	0.375	2	A	CIV	EV	C	03				
									FS	C	03				
									LT	C	OPB				
									ST	C	03				
									VP	OC	24				
	RETURN ISOLATION FROM UNIT 2 HYDROGEN ANALYZERS TO UNIT 2 CONTAINMENT,OUTSIDE CONTAINMENT ISOLATION VALVE														
2-HC-TV-204A	11715-CBM-106A	4 OF 4	F4	AO GLOBE	2.5	2	A	CIV	EV	C	03				
									FS	C	03				
									LT	C	OPB				
									ST	C	03				
									VP	OC	24				
	SUPPLY ISOL FROM CONTAINMENT TO HYDRO RECOMB & CONTAINMENT BLOWER,OUTSIDE CONTAINMENT ISOLATION VALVE														
2-HC-TV-204B	11715-CBM-106A	4 OF 4	F5	AO GLOBE	2.5	2	A	CIV	EV	C	03				
									FS	C	03				
									LT	C	OPB				
									ST	C	03				
									VP	OC	24				
	SUPPLY ISOL FROM CONTAINMENT TO HYDRO RECOMB & CONTAINMENT BLOWER,OUTSIDE CONTAINMENT ISOLATION VALVE														
2-HC-TV-205A	11715-CBM-106A	1 OF 4	E4	AO GLOBE	2.5	2	A	CIV	EV	C	03				

NORTH ANNA UNIT 2
FOURTH INSERVICE TESTING INTERVAL
VALVE INSERVICE TEST TABLE

VALVE NUMBER	DRAWING NUMBER	SHEET	COOR	VALVE TYPE	VALVE SIZE	ASME CLASS	ISTC CAT	ISO VALVE TYPE	TEST TYPE	TEST POS	TEST FREQ	RE REQ V-	CS JUST CSV-	RR JUST RRV-	NC ALT TEST VNC-
2-HC-TV-205A	11715-CBM-106A	1 OF 4	E4	AO GLOBE	2.5	2	A	CIV	FS	C	03				
									LT	C	OPB				
									ST	C	03				
									VP	OC	24				
	RETURN ISOLATION FROM UNIT 1 HYDROGEN RECOMB & ANAL TO UNIT2 CONTAIMENT, OUTSIDE CONTAIMENT ISOLATION VALVE														
2-HC-TV-205B	11715-CBM-106A	1 OF 4	E5	AO GLOBE	2.5	2	A	CIV	EV	C	03				
									FS	C	03				
									LT	C	OPB				
									ST	C	03				
									VP	OC	24				
	RETURN ISOLATION FROM UNIT 1 HYDROGEN RECOMB & ANAL TO UNIT2 CONTAIMENT, OUTSIDE CONTAIMENT ISOLATION VALVE														
2-HC-TV-206A	11715-CBM-106A	4 OF 4	F3	AO GLOBE	2.5	2	A	CIV	EV	C	03				
									FS	C	03				
									LT	C	OPB				
									ST	C	03				
									VP	OC	24				
	SUPPLY ISOLATION TO CONTAIMENT ATMO PURGE BLOW & HYDRO RECOMB, OUTSIDE CONTAIMENT ISOLATION VLV														
2-HC-TV-206B	11715-CBM-106A	4 OF 4	F3	AO GLOBE	2.5	2	A	CIV	EV	C	03				
									FS	C	03				
									LT	C	OPB				
									ST	C	03				
									VP	OC	24				
	SUPPLY ISOLATION TO CONTAIMENT ATMO PURGE BLOW & HYDRO RECOMB, OUTSIDE CONTAIMENT ISOLATION VLV														

NORTH ANNA UNIT 2
FOURTH INSERVICE TESTING INTERVAL
VALVE INSERVICE TEST TABLE

VALVE NUMBER	DRAWING NUMBER	SHEET	COOR	VALVE TYPE	VALVE SIZE	ASME CLASS	ISTC CAT	ISO VALVE TYPE	TEST TYPE	TEST POS	TEST FREQ	RE REQ V-	CS JUST CSV-	RR JUST RRV-	NC ALT TEST VNC-
2-HC-TV-207A	11715-CBM-106A	2 OF 4	E3	AO GLOBE	2.5	2	A	CIV	EV	C	03				
									FS	C	03				
									LT	C	OPB				
									ST	C	03				
									VP	OC	24				
	RETURN ISOLATION FROM UNIT 2 HYDROGEN RECOMB & ANAL TO UNIT2 CONTAIMENT, OUTSIDE CONTAIMENT ISOLATION VALVE														
2-HC-TV-207B	11715-CBM-106A	2 OF 4	E3	AO GLOBE	2.5	2	A	CIV	EV	C	03				
									FS	C	03				
									LT	C	OPB				
									ST	C	03				
									VP	OC	24				
	RETURN ISOLATION FROM UNIT 2 HYDROGEN RECOMB & ANAL TO UNIT2 CONTAIMENT, OUTSIDE CONTAIMENT ISOLATION VALVE														
2-HC-TV-208A	11715-CBM-106A	3 OF 4	E3	SO GLOBE	0.375	2	A	CIV	EV	C	03				
									FS	C	03				
									LT	C	OPB				
									ST	C	03				
									VP	OC	24				
	UNIT 2 SAMPLE LINE TO AIR SAMPLE PANEL, INSIDE CONTAINMENT ISOLATION VALVE														
2-HC-TV-208B	11715-CBM-106A	3 OF 4	E4	SO GLOBE	0.375	2	A	CIV	EV	C	03				
									FS	C	03				
									LT	C	OPB				
									ST	C	03				
									VP	OC	24				
	UNIT 2 SAMPLE LINE TO AIR SAMPLE PANEL, OUTSIDE CONTAINMENT ISOLATION VALVE														

NORTH ANNA UNIT 2
FOURTH INSERVICE TESTING INTERVAL
VALVE INSERVICE TEST TABLE

VALVE NUMBER	DRAWING NUMBER	SHEET	COOR	VALVE TYPE	VALVE SIZE	ASME CLASS	ISTC CAT	ISO VALVE TYPE	TEST TYPE	TEST POS	TEST FREQ	RE REQ V-	CS JUST CSV-	RR JUST RRV-	NC ALT TEST VNC-
2-HV-MOV-200A	11715-CBB-006A	2 OF 3	D3	MO BFLY	36	2	AE	CIV	LT VP	C OC	OPB 24				
	CONTAINMENT PURGE SUPPLY, INSIDE CONTAINMENT ISOLATION VALVE														
2-HV-MOV-200B	11715-CBB-006A	2 OF 3	D3	MO BFLY	36	2	AE	CIV	LT VP	C OC	OPB 24				
	CONTAINMENT PURGE SUPPLY, OUTSIDE CONTAINMENT ISOLATION VALVE														
2-HV-MOV-200C	11715-CBB-006A	2 OF 3	C3	MO BFLY	36	2	AE	CIV	LT VP	C OC	OPB 24				
	CONTAINMENT PURGE EXHAUST, INSIDE CONTAINMENT ISOLATION VALVE														
2-HV-MOV-200D	11715-CBB-006A	2 OF 3	C3	MO BFLY	36	2	AE	CIV	LT VP	C OC	OPB 24				
	CONTAINMENT PURGE EXHAUST, OUTSIDE CONTAIN MENT ISOLATION VALVE														
2-HV-MOV-201	11715-CBB-006A	2 OF 3	C3	MO BFLY	8	2	AE	CIV	LT VP	C OC	OPB 24				
	CONTAINMENT PURGE BYPASS, OUTSIDE CONTAINMENT ISOLATION VALVE														
2-HV-MOV-202	11715-CBB-006A	2 OF 3	D3	MO BFLY	18	2	AE	CIV	LT VP	C OC	OPB 24				
	CONTAINMENT PURGE ALTERNATE SUPPLY, OUTSIDE CONTAINMENT ISOLATION VALVE														
2-HV-MOV-211A	11715-CBB-040C	2 OF 3	E8	MO GATE	4	3	B		EV ST VP	O O OC	03 03 24				
	CONTROL ROOM CHILLER ISOLATION VALVE														
2-HV-MOV-211B	11715-CBB-040C	2 OF 3	C6	MO GATE	4	3	B		EV ST	O O	03 03				
	CONTROL ROOM CHILLER ISOLATION VALVE														
2-HV-MOV-211C	11715-CBB-040C	2 OF 3	D8	MO GATE	4	3	B		EV ST	O O	03 03				

NORTH ANNA UNIT 2
FOURTH INSERVICE TESTING INTERVAL
VALVE INSERVICE TEST TABLE

VALVE NUMBER	DRAWING NUMBER	SHEET	COOR	VALVE TYPE	VALVE SIZE	ASME CLASS	ISTC CAT	ISO VALVE TYPE	TEST TYPE	TEST POS	TEST FREQ	RE REQ V-	CS JUST CSV-	RR JUST RRV-	NC ALT TEST VNC-
	CONTROL ROOM CHILLER ISOLATION VALVE														
2-HV-MOV-213A	11715-CBB-040D	2 OF 3	E3	MO GATE	4	3	B		EV	O	03				
									ST	O	03				
									VP	OC	24				
	CONTROL ROOM CONDENSER WATER SYSTEM ISOLATION VALVE														
2-HV-MOV-213B	11715-CBB-040D	2 OF 3	B3	MO GATE	4	3	B		EV	O	03				
									ST	O	03				
	CONTROL ROOM CONDENSER WATER SYSTEM ISOLATION VALVE														
2-HV-MOV-213C	11715-CBB-040D	2 OF 3	C3	MO GATE	4	3	B		EV	O	03				
									ST	O	03				
	CONTROL ROOM CONDENSER WATER SYSTEM ISOLATION VALVE														
2-HV-PCV-2235A1	11715-CBB-040D	2 OF 3	E6	AO GLOBE	3	3	B		EV	C	03				
									FS	C	03				
									ST	C	NA	2			
	CONTROL ROOM CONDENSER WATER BYPASS LINE PRESSURE CONTROL VALVE														
2-HV-PCV-2235A2	11715-CBB-040D	2 OF 3	E3	AO GLOBE	3	3	B		EV	O	03				
									FS	O	03				
									ST	O	NA	2			
	CONTROL ROOM CONDENSER WATER PRESSURE CONTROL VALVE														
2-HV-PCV-2235B1	11715-CBB-040D	2 OF 3	A6	AO GLOBE	3	3	B		EV	C	03				
									FS	C	03				
									ST	C	NA	2			
	CONTROL ROOM CONDENSER WATER BYPASS LINE PRESSURE CONTROL VALVE														
2-HV-PCV-2235B2	11715-CBB-040D	2 OF 3	B3	AO GLOBE	3	3	B		EV	O	03				
									FS	O	03				
									ST	O	NA	2			
	CONTROL ROOM CONDENSER WATER PRESSURE CONTROL VALVE														

NORTH ANNA UNIT 2
FOURTH INSERVICE TESTING INTERVAL
VALVE INSERVICE TEST TABLE

VALVE NUMBER	DRAWING NUMBER	SHEET	COOR	VALVE TYPE	VALVE SIZE	ASME CLASS	ISTC CAT	ISO VALVE TYPE	TEST TYPE	TEST POS	TEST FREQ	RE REQ V-	CS JUST CSV-	RR JUST RRV-	NC ALT TEST VNC-
2-HV-PCV-2235C1	11715-CBB-040D	2 OF 3	C6	AO GLOBE	3	3	B		EV	C	03				
									FS	C	03				
									ST	C	NA	2			
	CONTROL ROOM CONDENSER WATER BYPASS LINE PRESSURE CONTROL VALVE														
2-HV-PCV-2235C2	11715-CBB-040D	2 OF 3	C3	AO GLOBE	3	3	B		EV	O	03				
									FS	O	03				
									ST	O	NA	2			
	CONTROL ROOM CONDENSER WATER PRESSURE CONTROL VALVE														
2-HV-RV-2200	11715-CBB-040C	2 OF 3	D4	RELIEF VALVE	0.75	3	C		SP	O	120	3, NOTE 1			
	CONTROL ROOM CHILLER SYSTEM RELIEF VALVE														
2-HV-RV-2201	11715-CBB-040C	2 OF 3	C4	RELIEF VALVE	0.75	3	C		SP	O	120	3, NOTE 1			
	CONTROL ROOM CHILLER SYSTEM RELIEF VALVE														
2-HV-RV-2202A	11715-CBB-040C	2 OF 3	E7	RELIEF VALVE	0.5	3	C		SP	O	120	3, NOTE 1			
	CONTROL ROOM CHILLER SYSTEM RELIEF VALVE														
2-HV-RV-2202B	11715-CBB-040C	2 OF 3	C5	RELIEF VALVE	0.5	3	C		SP	O	120	3, NOTE 1			
	CONTROL ROOM CHILLER SYSTEM RELIEF VALVE														
2-HV-RV-2202C	11715-CBB-040C	2 OF 3	D8	RELIEF VALVE	0.5	3	C		SP	O	120	3, NOTE 1			
	CONTROL ROOM CHILLER SYSTEM RELIEF VALVE														
2-HV-RV-2205A	11715-CBB-040D	2 OF 3	E4	RELIEF VALVE	0.5	3	C		SP	O	120	3, NOTE 1			
	CONTROL ROOM CONDENSER WATER SYSTEM RELIEF VALVE														
2-HV-RV-2205B	11715-CBB-040D	2 OF 3	B4	RELIEF VALVE	0.5	3	C		SP	O	120	3, NOTE 1			
	CONTROL ROOM CONDENSER WATER SYSTEM RELIEF VALVE														
2-HV-RV-2205C	11715-CBB-040D	2 OF 3	D4	RELIEF VALVE	0.5	3	C		SP	O	120	3, NOTE 1			
	CONTROL ROOM CONDENSER WATER SYSTEM RELIEF VALVE														

NORTH ANNA UNIT 2
FOURTH INSERVICE TESTING INTERVAL
VALVE INSERVICE TEST TABLE

VALVE NUMBER	DRAWING NUMBER	SHEET	COOR	VALVE TYPE	VALVE SIZE	ASME CLASS	ISTC CAT	ISO VALVE TYPE	TEST TYPE	TEST POS	TEST FREQ	RE REQ V-	CS JUST CSV-	RR JUST RRV-	NC ALT TEST VNC-
2-HV-SOV-2200A	11715-CBB-040D	2 OF 3	F7	SO GATE	0.5	3	B		EV	O	03				
									ST	O	03				
	CONTROL ROOM CONDENSER PUMP SEAL COOLING WATER LINE ISOLATION VALVE														
2-HV-SOV-2200B	11715-CBB-040D	2 OF 3	B7	SO GATE	0.5	3	B		EV	O	03				
									ST	O	03				
	CONTROL ROOM CONDENSER PUMP SEAL COOLING WATER LINE ISOLATION VALVE														
2-HV-SOV-2200C	11715-CBB-040D	2 OF 3	D7	SO GATE	0.5	3	B		EV	O	03				
									ST	O	03				
	CONTROL ROOM CONDENSER PUMP SEAL COOLING WATER LINE ISOLATION VALVE														

NORTH ANNA UNIT 2
FOURTH INSERVICE TESTING INTERVAL
VALVE INSERVICE TEST TABLE

VALVE NUMBER	DRAWING NUMBER	SHEET	COOR	VALVE TYPE	VALVE SIZE	ASME CLASS	ISTC CAT	ISO VALVE TYPE	TEST TYPE	TEST POS	TEST FREQ	RE REQ V-	CS JUST CSV-	RR JUST RRV-	NC ALT TEST VNC-
2-IA-2130	12050-FM -082A	2 OF 3	E7	CHECK VALVE	0.75	NC	AC		CV	C	RR			29	
										O	RR			29	
									LT	C	24				
	BOTTLED NITROGEN SUPPLY TO PORV ISOLATION CHECK VALVE														
2-IA-2131	12050-FM -082A	2 OF 3	E8	CHECK VALVE	0.75	NC	AC		CV	C	RR			29	
										O	RR			29	
									LT	C	24				
	BOTTLED NITROGEN SUPPLY TO PORV ISOLATION CHECK VALVE														
2-IA-2132	12050-FM -082A	2 OF 3	E7	CHECK VALVE	0.75	NC	AC		CV	C	RR			29	
										O	RR			29	
									LT	C	24				
	BOTTLED NITROGEN SUPPLY TO PORV ISOLATION CHECK VALVE														
2-IA-2133	12050-FM -082A	2 OF 3	E8	CHECK VALVE	0.75	NC	AC		CV	C	RR			29	
										O	RR			29	
									LT	C	24				
	BOTTLED NITROGEN SUPPLY TO PORV ISOLATION CHECK VALVE														
2-IA-2251	12050-CBM-082B	2 OF 3	F6	CHECK VALVE	0.25	NC	AC		CV	C	24			31	
										O	24			31	
									LT	C	24				
	SAFEGUARDS EXHAUST VENT RELIEF DAMPER AIR RECEIVER ISOLATION CHECK VALVE														
2-IA-250	12050-CBM-082A	1 OF 3	F3	CHECK VALVE	2	2	AC	CIV	CV	C	RR			5	
										O	RR	TP-01		5	
									LT	C	OPB				
	INSTRUMENT AIR SUPPLY TO CONTAINMENT, INSIDE CONTAINMENT ISOLATION CHECK VALVE														
2-IA-2591	11715-FM -082C	1 OF 2	D4	CHECK VALVE	0.5	NC	AC		CV	C	24			33	
										O	24			33	
									LT	C	24				
	SAFEGUARDS EXHAUST VENT RELIEF DAMPER AIR RECEIVER ISOLATION CHECK VALVE														

NORTH ANNA UNIT 2
FOURTH INSERVICE TESTING INTERVAL
VALVE INSERVICE TEST TABLE

VALVE NUMBER	DRAWING NUMBER	SHEET	COOR	VALVE TYPE	VALVE SIZE	ASME CLASS	ISTC CAT	ISO VALVE TYPE	TEST TYPE	TEST POS	TEST FREQ	RE REQ V-	CS JUST CSV-	RR JUST RRV-	NC ALT TEST VNC-
2-IA-428	12050-CBM-082B	2 OF 3	C7	CHECK VALVE	1	2	AC	CIV	CV	C	RR			5	
										O	RR	TP-01		5	
									LT	C	OPB				
	RETURN TO CONTAINMENT FROM RADIATION MONITORING CABINET, INSIDE CONT ISOL CHECK VALVE														
2-IA-497	11715-FM- 082C	1 OF 2	C7	CHECK VALVE	0.5	NC	AC		CV	C	24			30	
										O	24			30	
									LT	C	24				
	BOTTLED AIR SUPPLY TO HYDROGEN RECOMBINER VALVES ISOLATION CHECK VALVE														
2-IA-499	11715-FM- 082C	1 OF 2	C7	CHECK VALVE	0.5	NC	AC		CV	C	24			30	
										O	24			30	
									LT	C	24				
	BOTTLED AIR SUPPLY TO HYDROGEN RECOMBINER VALVES ISOLATION CHECK VALVE														
2-IA-504	12050-FM -082C	1 OF 2	E3	CHECK VALVE	0.75	NC	AC		CV	C	CS		11		
										O	CS		11		
									LT	C	24				1
	MAIN STEAM PCV VALVE AIR ACCUMULATOR ISOLATION CHECK VALVE														
2-IA-510	12050-FM -082C	1 OF 2	E4	CHECK VALVE	0.75	NC	AC		CV	C	CS		11		
										O	CS		11		
									LT	C	24				1
	MAIN STEAM PCV VALVE AIR ACCUMULATOR ISOLATION CHECK VALVE														
2-IA-516	12050-FM -082C	1 OF 2	E4	CHECK VALVE	0.75	NC	AC		CV	C	CS		11		
										O	CS		11		
									LT	C	24				1
	MAIN STEAM PCV VALVE AIR ACCUMULATOR ISOLATION CHECK VALVE														
2-IA-525	12050-FM -082C	1 OF 2	E6	CHECK VALVE	0.75	NC	AC		CV	C	CS		11		
										O	CS		11		
									LT	C	24				1
	AUXILIARY FEEDWATER VALVE AIR ACCUMULATOR ISOLATION CHECK VALVE														

NORTH ANNA UNIT 2
FOURTH INSERVICE TESTING INTERVAL
VALVE INSERVICE TEST TABLE

VALVE NUMBER	DRAWING NUMBER	SHEET	COOR	VALVE TYPE	VALVE SIZE	ASME CLASS	ISTC CAT	ISO VALVE TYPE	TEST TYPE	TEST POS	TEST FREQ	RE REQ V-	CS JUST CSV-	RR JUST RRV-	NC ALT TEST VNC-
2-IA-531	12050-FM -082C	1 OF 2	E5	CHECK VALVE	0.75	NC	AC		CV	C	CS		11		
										O	CS		11		
									LT	C	24				1
	AUXILIARY FEEDWATER VALVE AIR ACCUMULATOR ISOLATION CHECK VALVE														
2-IA-537	12050-FM -082C	1 OF 2	E6	CHECK VALVE	0.75	NC	AC		CV	C	CS		11		
										O	CS		11		
									LT	C	24				1
	AUXILIARY FEEDWATER VALVE AIR ACCUMULATOR ISOLATION CHECK VALVE														
2-IA-543	12050-FM -082C	1 OF 2	E7	CHECK VALVE	0.75	NC	AC		CV	C	CS		11		
										O	CS		11		
									LT	C	24				1
	AUXILIARY FEEDWATER VALVE AIR ACCUMULATOR ISOLATION CHECK VALVE														
2-IA-549	12050-FM -082C	1 OF 2	E8	CHECK VALVE	0.75	NC	AC		CV	C	CS		11		
										O	CS		11		
									LT	C	24				1
	AUXILIARY FEEDWATER VALVE AIR ACCUMULATOR ISOLATION CHECK VALVE														
2-IA-RV-210	12050-FM -082A	2 OF 3	E8	RELIEF VALVE	0.5	NC	C		SP	O	120				5
	AIR SUPPLY TO 2-RC-PCV-2455C														
2-IA-RV-211	12050-FM -082A	2 OF 3	E8	RELIEF VALVE	0.5	NC	C		SP	O	120				5
	AIR SUPPLY TO 2-RC-PCV-2456 RELIEF VALVE														
2-IA-SV-205A	12050-FM -082C	1 OF 2	D3	RELIEF VALVE	1	NC	C		SP	O	120				
	MAIN STEAM PCV VALVE AIR ACCUMULATOR RELIEF VALVE														
2-IA-SV-205B	12050-FM -082C	1 OF 2	D4	RELIEF VALVE	1	NC	C		SP	O	120				
	MAIN STEAM PCV VALVE AIR ACCUMULATOR RELIEF VALVE														
2-IA-SV-205C	12050-FM -082C	1 OF 2	D4	RELIEF VALVE	1	NC	C		SP	O	120				
	MAIN STEAM PCV VALVE AIR ACCUMULATOR RELIEF VALVE														

NORTH ANNA UNIT 2
FOURTH INSERVICE TESTING INTERVAL
VALVE INSERVICE TEST TABLE

VALVE NUMBER	DRAWING NUMBER	SHEET	COOR	VALVE TYPE	VALVE SIZE	ASME CLASS	ISTC CAT	ISO VALVE TYPE	TEST TYPE	TEST POS	TEST FREQ	RE REQ V-	CS JUST CSV-	RR JUST RRV-	NC ALT TEST VNC-
2-IA-SV-205D	12050-FM -082C	1 OF 2	D5	RELIEF VALVE	1	NC	C		SP	O	120				
	AUXILIARY FEEDWATER VALVE AIR ACCUMULATOR RELIEF VALVE														
2-IA-SV-205E	12050-FM -082C	1 OF 2	D6	RELIEF VALVE	1	NC	C		SP	O	120				
	AUXILIARY FEEDWATER VALVE AIR ACCUMULATOR RELIEF VALVE														
2-IA-SV-205F	12050-FM -082C	1 OF 2	D7	RELIEF VALVE	1	NC	C		SP	O	120				
	AUXILIARY FEEDWATER VALVE AIR ACCUMULATOR RELIEF VALVE														
2-IA-SV-205G	12050-FM -082C	1 OF 2	D7	RELIEF VALVE	1	NC	C		SP	O	120				
	AUXILIARY FEEDWATER VALVE AIR ACCUMULATOR RELIEF VALVE														
2-IA-SV-205H	12050-FM -082C	1 OF 2	D8	RELIEF VALVE	1	NC	C		SP	O	120				
	AUXILIARY FEEDWATER VALVE AIR ACCUMULATOR RELIEF VALVE														
2-IA-TV-201A	12050-CBM-082C	2 OF 2	F7	AO GLOBE	3	2	AE	CIV	LT	C	OPB				
									VP	OC	24				
	INSTRUMENT AIR SUPPLY FROM CONTAINMENT, INSIDE CONTAINMENT ISOLATION VALVE														
2-IA-TV-201B	12050-CBM-082C	2 OF 2	F8	AO GLOBE	3	2	AE	CIV	LT	C	OPB				
									VP	OC	24				
	INSTRUMENT AIR SUPPLY FROM CONTAINMENT, INSIDE CONTAINMENT ISOLATION VALVE														
2-IA-TV-202A	12050-CBM-082B	1 OF 3	D7	AO GLOBE	3	2	A	CIV	EV	C	CS		25		
									FS	C	CS		25		
									LT	C	OPB				
									ST	C	CS		25		
									VP	OC	24				
	INSTRUMENT AIR SUPPLY TO CONTAINMENT, OUTSIDE CONTAINMENT ISOLATION VALVE														
2-IA-TV-202B	12050-CBM-082B	1 OF 3	D7	AO GLOBE	3	2	B		EV	C	CS		25		
									FS	C	CS		25		
									ST	C	CS		25		
									VP	OC	24				

NORTH ANNA UNIT 2
FOURTH INSERVICE TESTING INTERVAL
VALVE INSERVICE TEST TABLE

VALVE NUMBER	DRAWING NUMBER	SHEET	COOR	VALVE TYPE	VALVE SIZE	ASME CLASS	ISTC CAT	ISO VALVE TYPE	TEST TYPE	TEST POS	TEST FREQ	RE REQ V-	CS JUST CSV-	RR JUST RRV-	NC ALT TEST VNC-
	INSTRUMENT AIR SUPPLY TO CONTAINMENT, OUTSIDE CONTAINMENT ISOLATION VALVE														

NORTH ANNA UNIT 2
FOURTH INSERVICE TESTING INTERVAL
VALVE INSERVICE TEST TABLE

VALVE NUMBER	DRAWING NUMBER	SHEET	COOR	VALVE TYPE	VALVE SIZE	ASME CLASS	ISTC CAT	ISO VALVE TYPE	TEST TYPE	TEST POS	TEST FREQ	RE REQ V-	CS JUST CSV-	RR JUST RRV-	NC ALT TEST VNC-
2-LM-TV-200A	12050-CBM-092A	1 OF 2	E7	AO GLOBE	0.375	2	AE	CIV	LT VP	C OC	OPB 24				
	CONTAINMENT LEAKAGE MONITORING OPEN SYSTEM SUPPLY, OUTSIDE CONTAINMENT ISOLATION VALVE														
2-LM-TV-200B	12050-CBM-092A	1 OF 2	E6	AO GLOBE	0.375	2	AE	CIV	LT VP	C OC	OPB 24				
	CONTAINMENT LEAKAGE MONITORING OPEN SYSTEM SUPPLY, OUTSIDE CONTAINMENT ISOLATION VALVE														
2-LM-TV-200C	12050-CBM-092A	1 OF 2	E7	AO GLOBE	0.375	2	AE	CIV	LT VP	C OC	OPB 24				
	CONTAINMENT LEAKAGE MONITORING OPEN SYSTEM SUPPLY, OUTSIDE CONTAINMENT ISOLATION VALVE														
2-LM-TV-200D	12050-CBM-092A	1 OF 2	E5	AO GLOBE	0.375	2	AE	CIV	LT VP	C OC	OPB 24				
	CONTAINMENT LEAKAGE MONITORING OPEN SYSTEM SUPPLY, OUTSIDE CONTAINMENT ISOLATION VALVE														
2-LM-TV-200E	12050-CBM-092A	1 OF 2	F6	AO GLOBE	0.375	2	AE	CIV	LT VP	C OC	OPB 24				
	CONTAINMENT LEAKAGE MONITORING OPEN SYSTEM SUPPLY, OUTSIDE CONTAINMENT ISOLATION VALVE														
2-LM-TV-200F	12050-CBM-092A	1 OF 2	F5	AO GLOBE	0.375	2	AE	CIV	LT VP	C OC	OPB 24				
	CONTAINMENT LEAKAGE MONITORING OPEN SYSTEM SUPPLY, OUTSIDE CONTAINMENT ISOLATION VALVE														
2-LM-TV-200G	12050-CBM-092A	1 OF 2	E7	AO GLOBE	0.375	2	AE	CIV	LT VP	C OC	OPB 24				
	CONTAINMENT LEAKAGE MONITORING OPEN SYSTEM SUPPLY, OUTSIDE CONTAINMENT ISOLATION VALVE														
2-LM-TV-200H	12050-CBM-092A	1 OF 2	E6	AO GLOBE	0.375	2	AE	CIV	LT VP	C OC	OPB 24				
	CONTAINMENT LEAKAGE MONITORING OPEN SYSTEM SUPPLY, OUTSIDE CONTAINMENT ISOLATION VALVE														
2-LM-TV-201A	12050-CBM-092A	1 OF 2	D5	AO GLOBE	0.375	2	AE	CIV	LT VP	C OC	OPB 24				

NORTH ANNA UNIT 2
FOURTH INSERVICE TESTING INTERVAL
VALVE INSERVICE TEST TABLE

VALVE NUMBER	DRAWING NUMBER	SHEET	COOR	VALVE TYPE	VALVE SIZE	ASME CLASS	ISTC CAT	ISO VALVE TYPE	TEST TYPE	TEST POS	TEST FREQ	RE REQ V-	CS JUST CSV-	RR JUST RRV-	NC ALT TEST VNC-
	CONTAINMENT LEAKAGE MONITORING SEALED SYSTEM SUPPLY, OUTSIDE CONTAINMENT ISOLATION VALVE														
2-LM-TV-201B	12050-CBM-092A	1 OF 2	D5	AO GLOBE	0.375	2	AE	CIV	LT VP	C OC	OPB 24				
	CONTAINMENT LEAKAGE MONITORING SEALED SYSTEM SUPPLY, OUTSIDE CONTAINMENT ISOLATION VALVE														
2-LM-TV-201C	12050-CBM-092A	1 OF 2	D5	AO GLOBE	0.375	2	AE	CIV	LT VP	C OC	OPB 24				
	CONTAINMENT LEAKAGE MONITORING SEALED SYSTEM SUPPLY, OUTSIDE CONTAINMENT ISOLATION VALVE														
2-LM-TV-201D	12050-CBM-092A	1 OF 2	D5	AO GLOBE	0.375	2	AE	CIV	LT VP	C OC	OPB 24				
	CONTAINMENT LEAKAGE MONITORING SEALED SYSTEM SUPPLY, OUTSIDE CONTAINMENT ISOLATION VALVE														

NORTH ANNA UNIT 2
FOURTH INSERVICE TESTING INTERVAL
VALVE INSERVICE TEST TABLE

VALVE NUMBER	DRAWING NUMBER	SHEET	COOR	VALVE TYPE	VALVE SIZE	ASME CLASS	ISTC CAT	ISO VALVE TYPE	TEST TYPE	TEST POS	TEST FREQ	RE REQ V-	CS JUST CSV-	RR JUST RRV-	NC ALT TEST VNC-
2-MS-018	12050-CBM-070B	1 OF 3	B7	MANUAL GATE	3	2	B		EV	C	24				
	MAIN STEAM TO AUXILIARY FEEDWATER TURBINE LINE ISOLATION VALVE														
2-MS-057	12050-CBM-070B	2 OF 3	C7	MANUAL GATE	3	2	B		EV	C	24				
	MAIN STEAM TO AUXILIARY FEEDWATER TURBINE LINE ISOLATION VALVE														
2-MS-095	12050-CBM-070B	3 OF 3	B7	MANUAL GATE	3	2	B		EV	C	24				
	MAIN STEAM TO AUXILIARY FEEDWATER TURBINE LINE ISOLATION VALVE														
2-MS-117	12050-CBM-070A	3 OF 3	F7	CHECK VALVE	3	3	C		CV	C	03				
										O	03				
	"C" MAIN STEAM HEADER SUPPLY CHECK VALVE TO TURBINE DRIVEN AUXILIARY FEEDWATER PUMP														
2-MS-119	12050-CBM-070A	3 OF 3	F7	CHECK VALVE	3	3	C		CV	C	03				
										O	03				
	"B" MAIN STEAM HEADER SUPPLY CHECK VALVE TO TURBINE DRIVEN AUXILIARY FEEDWATER PUMP														
2-MS-121	12050-CBM-070A	3 OF 3	E7	CHECK VALVE	3	3	C		CV	C	03				
										O	03				
	"A" MAIN STEAM HEADER SUPPLY CHECK VALVE TO TURBINE DRIVEN AUXILIARY FEEDWATER PUMP														
2-MS-NRV-201A	12050-CBM-070B	1 OF 3	D3	CHECK VALVE	32	2	C		CV	C	CS		7		
										O	CS	TP-01	7		
									VP	OC	24				
	"A" MAIN STEAM HEADER NON-RETURN VALVE														
2-MS-NRV-201B	12050-CBM-070B	2 OF 3	D3	CHECK VALVE	32	2	C		CV	C	CS		7		
										O	CS	TP-01	7		
									VP	OC	24				
	"B" MAIN STEAM HEADER NON-RETURN VALVE														
2-MS-NRV-201C	12050-CBM-070B	3 OF 3	D3	CHECK VALVE	32	2	C		CV	C	CS		7		
										O	CS	TP-01	7		
									VP	OC	24				

NORTH ANNA UNIT 2
FOURTH INSERVICE TESTING INTERVAL
VALVE INSERVICE TEST TABLE

VALVE NUMBER	DRAWING NUMBER	SHEET	COOR	VALVE TYPE	VALVE SIZE	ASME CLASS	ISTC CAT	ISO VALVE TYPE	TEST TYPE	TEST POS	TEST FREQ	RE REQ V-	CS JUST CSV-	RR JUST RRV-	NC ALT TEST VNC-
	"C" MAIN STEAM HEADER NON-RETURN VALVE														
2-MS-PCV-201A	12050-CBM-070B	1 OF 3	E5	AO ANGLE	6	2	B		EV	C	RR			35	
									FS	C	RR			35	
									ST	C	NA	2			
									VP	OC	24				
	"A" MAIN STEAM HEADER DISCHARGE TO ATMOSPHERE PRESSURE CONTROL VALVE														
2-MS-PCV-201B	12050-CBM-070B	2 OF 3	E6	AO ANGLE	6	2	B		EV	C	RR			35	
									FS	C	RR			35	
									ST	C	NA	2			
									VP	OC	24				
	"B" MAIN STEAM HEADER DISCHARGE TO ATMOSPHERE PRESSURE CONTROL VALVE														
2-MS-PCV-201C	12050-CBM-070B	3 OF 3	E5	AO ANGLE	6	2	B		EV	C	RR			35	
									FS	C	RR			35	
									ST	C	NA	2			
									VP	OC	24				
	"C" MAIN STEAM HEADER DISCHARGE TO ATMOSPHERE PRESSURE CONTROL VALVE														
2-MS-SV-201A	12050-CBM-070B	1 OF 3	E6	SAFETY	6	2	C		SP	O	60				
	"A" MAIN STEAM HEADER SAFETY VALVE, SV DISCHARGE TO ATMOS														
2-MS-SV-201B	12050-CBM-070B	2 OF 3	D6	SAFETY	6	2	C		SP	O	60				
	"B" MAIN STEAM HEADER SAFETY VALVE, SV DISCHARGE TO ATMOS														
2-MS-SV-201C	12050-CBM-070B	3 OF 3	D6	SAFETY	6	2	C		SP	O	60				
	"C" MAIN STEAM HEADER SAFETY VALVE, SV DISCHARGE TO ATMOS														
2-MS-SV-202A	12050-CBM-070B	1 OF 3	E5	SAFETY	6	2	C		SP	O	60				
	"A" MAIN STEAM HEADER SAFETY VALVE, SV DISCHARGE TO ATMOS														
2-MS-SV-202B	12050-CBM-070B	2 OF 3	D5	SAFETY	6	2	C		SP	O	60				
	"B" MAIN STEAM HEADER SAFETY VALVE, SV DISCHARGE TO ATMOS														

NORTH ANNA UNIT 2
FOURTH INSERVICE TESTING INTERVAL
VALVE INSERVICE TEST TABLE

VALVE NUMBER	DRAWING NUMBER	SHEET	COOR	VALVE TYPE	VALVE SIZE	ASME CLASS	ISTC CAT	ISO VALVE TYPE	TEST TYPE	TEST POS	TEST FREQ	RE REQ V-	CS JUST CSV-	RR JUST RRV-	NC ALT TEST VNC-
2-MS-SV-202C	12050-CBM-070B	3 OF 3	D6	SAFETY	6	2	C		SP	O	60				
	"C" MAIN STEAM HEADER SAFETY VALVE, SV DISCHARGE TO ATMOS														
2-MS-SV-203A	12050-CBM-070B	1 OF 3	E6	SAFETY	6	2	C		SP	O	60				
	"A" MAIN STEAM HEADER SAFETY VALVE, SV DISCHARGE TO ATMOS														
2-MS-SV-203B	12050-CBM-070B	2 OF 3	D5	SAFETY	6	2	C		SP	O	60				
	"B" MAIN STEAM HEADER SAFETY VALVE, SV DISCHARGE TO ATMOS														
2-MS-SV-203C	12050-CBM-070B	3 OF 3	D6	SAFETY	6	2	C		SP	O	60				
	"C" MAIN STEAM HEADER SAFETY VALVE, SV DISCHARGE TO ATMOS														
2-MS-SV-204A	12050-CBM-070B	1 OF 3	E6	SAFETY	6	2	C		SP	O	60				
	"A" MAIN STEAM HEADER SAFETY VALVE, SV DISCHARGE TO ATMOS														
2-MS-SV-204B	12050-CBM-070B	2 OF 3	D6	SAFETY	6	2	C		SP	O	60				
	"B" MAIN STEAM HEADER SAFETY VALVE, SV DISCHARGE TO ATMOS														
2-MS-SV-204C	12050-CBM-070B	3 OF 3	D6	SAFETY	6	2	C		SP	O	60				
	"C" MAIN STEAM HEADER SAFETY VALVE, SV DISCHARGE TO ATMOS														
2-MS-SV-205A	12050-CBM-070B	1 OF 3	E5	SAFETY	6	2	C		SP	O	60				
	"A" MAIN STEAM HEADER SAFETY VALVE, SV DISCHARGE TO ATMOS														
2-MS-SV-205B	12050-CBM-070B	2 OF 3	D5	SAFETY	6	2	C		SP	O	60				
	"B" MAIN STEAM HEADER SAFETY VALVE, SV DISCHARGE TO ATMOS														
2-MS-SV-205C	12050-CBM-070B	3 OF 3	D5	SAFETY	6	2	C		SP	O	60				
	"C" MAIN STEAM HEADER SAFETY VALVE, SV DISCHARGE TO ATMOS														
2-MS-TV-201A	12050-CBM-070B	1 OF 3	D4	AO DISC	32	2	B		EV	C	CS		9		
									FS	C	CS		9		
									ST	C	CS		9		
									VP	OC	24				

NORTH ANNA UNIT 2
FOURTH INSERVICE TESTING INTERVAL
VALVE INSERVICE TEST TABLE

VALVE NUMBER	DRAWING NUMBER	SHEET	COOR	VALVE TYPE	VALVE SIZE	ASME CLASS	ISTC CAT	ISO VALVE TYPE	TEST TYPE	TEST POS	TEST FREQ	RE REQ V-	CS JUST CSV-	RR JUST RRV-	NC ALT TEST VNC-
	"A" MAIN STEAM HEADER TRIP VALVE														
2-MS-TV-201B	12050-CBM-070B	2 OF 3	C4	AO DISC	32	2	B		EV	C	CS		9		
									FS	C	CS		9		
									ST	C	CS		9		
									VP	OC	24				
	"B" MAIN STEAM HEADER TRIP VALVE														
2-MS-TV-201C	12050-CBM-070B	3 OF 3	C4	AO DISC	32	2	B		EV	C	CS		9		
									FS	C	CS		9		
									ST	C	CS		9		
									VP	OC	24				
	"C" MAIN STEAM HEADER TRIP VALVE														
2-MS-TV-209	12050-CBM-070A	3 OF 3	D3	AO GLOBE	3	3	B		EV	C	CS		8		
									FS	C	CS		8		
									ST	C	CS		8		
									VP	OC	24				
	MAIN STEAM HIGH PRESSURE DRAIN ISOLATION TO CONDENSER														
2-MS-TV-210	12050-CBM-070B	3 OF 3	A4	AO GLOBE	1.5	NC	B		EV	C	03				
									FS	C	03				
									ST	C	03				
									VP	OC	24				
	MAIN STEAM HIGH PRESSURE DRAIN HEADER ISOLATION TO STEAM GENERATOR BLOWDOWN SYSTEM														
2-MS-TV-211A	12050-CBM-070A	3 OF 3	E5	AO GLOBE	3	3	B		EV	C	03				
										O	03				
									FS	O	03				
									ST	C	03				
										O	03				
									VP	OC	24				
	MAIN STEAM SUPPLY TRIP VALVE TO TURBINE DRIVEN AUXILIARY FEEDWATER PUMP														
2-MS-TV-211B	12050-CBM-070A	3 OF 3	E4	AO GLOBE	3	3	B		EV	C	03				

NORTH ANNA UNIT 2
FOURTH INSERVICE TESTING INTERVAL
VALVE INSERVICE TEST TABLE

VALVE NUMBER	DRAWING NUMBER	SHEET	COOR	VALVE TYPE	VALVE SIZE	ASME CLASS	ISTC CAT	ISO VALVE TYPE	TEST TYPE	TEST POS	TEST FREQ	RE REQ V-	CS JUST CSV-	RR JUST RRV-	NC ALT TEST VNC-
2-MS-TV-211B	12050-CBM-070A	3 OF 3	E4	AO GLOBE	3	3	B		EV	O	03				
									FS	O	03				
									ST	C	03				
										O	03				
									VP	OC	24				
	MAIN STEAM SUPPLY TRIP VALVE TO TURBINE DRIVEN AUXILIARY FEEDWATER PUMP														
2-MS-TV-213A	12050-CBM-070B	1 OF 3	D4	AO GLOBE	3	2	B		EV	C	CS		12		
									FS	C	CS		12		
									ST	C	CS		12		
									VP	OC	24				
	"A" MAIN STEAM TRIP BYPASS VALVE														
2-MS-TV-213B	12050-CBM-070B	2 OF 3	D4	AO GLOBE	3.	2	B		EV	C	CS		12		
									FS	C	CS		12		
									ST	C	CS		12		
									VP	OC	24				
	"B" MAIN STEAM TRIP BYPASS VALVE														
2-MS-TV-213C	12050-CBM-070B	3 OF 3	D4	AO GLOBE	3	2	B		EV	C	CS		12		
									FS	C	CS		12		
									ST	C	CS		12		
									VP	OC	24				
	"C" MAIN STEAM TRIP BYPASS VALVE														
2-MS-TV-215	12050-CBM-070A	3 OF 3	C4	MECH TRIP	3	3	E		VP	OC	24				
	MAIN STEAM SUPPLY TRIP VALVE TO TURBINE DRIVEN AFW PUMP														

NORTH ANNA UNIT 2
FOURTH INSERVICE TESTING INTERVAL
VALVE INSERVICE TEST TABLE

VALVE NUMBER	DRAWING NUMBER	SHEET	COOR	VALVE TYPE	VALVE SIZE	ASME CLASS	ISTC CAT	ISO VALVE TYPE	TEST TYPE	TEST POS	TEST FREQ	RE REQ V-	CS JUST CSV-	RR JUST RRV-	NC ALT TEST VNC-
2-QS-011	12050-CBM-091A	2 OF 4	D6	WL CHECK	8	2	AC	CIV	CV	C	RR			22	
										O	RR			22	
									LT	C	OPB				
	"A" QUENCH SPRAY PUMP INSIDE CONTAINMENT ISOLATION CHECK VALVE														
2-QS-022	12050-CBM-091A	2 OF 4	E6	WL CHECK	8	2	AC	CIV	CV	C	RR			22	
										O	RR			22	
									LT	C	OPB				
	"B" QUENCH SPRAY PUMP INSIDE CONTAINMENT ISOLATION CHECK VALVE														
2-QS-147	12050-CBM-091A	2 OF 4	B7	CHECK	2	2	AC		CV	C	RR			40	
										O	RR			40	
									LT	C	24				
	QUENCH SPRAY BLEED LINE ISOLATION CHECK VALVE														
2-QS-150	12050-CBM-091A	2 OF 4	B6	CHECK	2	2	AC		CV	C	RR			40	
										O	RR			40	
									LT	C	24				
	QUENCH SPRAY BLEED LINE ISOLATION CHECK VALVE														
2-QS-MOV-200A	12050-CBM-091A	2 OF 4	A3	MO GATE	10	2	E		VP	OC	24				
	"A" QUENCH SPRAY PUMP SUCTION ISOLATION VALVE FROM REFUELING WATER STORAGE TANK														
2-QS-MOV-200B	12050-CBM-091A	2 OF 4	A3	MO GATE	10	2	E		VP	OC	24				
	"B" QUENCH SPRAY PUMP SUCTION ISOLATION VALVE FROM REFUELING WATER STORAGE TANK														
2-QS-MOV-201A	12050-CBM-091A	2 OF 4	D5	MO GATE	8	2	A	CIV	EV	C	03				
										O	03				
									LT	C	OPB				
									ST	C	03				
										O	03				
									VP	OC	24				
	"A" QUENCH SPRAY PUMP DISCHARGE ISOLATION VALVE, OUTSIDE CONTAINMENT ISOLATION VALVE														

NORTH ANNA UNIT 2
FOURTH INSERVICE TESTING INTERVAL
VALVE INSERVICE TEST TABLE

VALVE NUMBER	DRAWING NUMBER	SHEET	COOR	VALVE TYPE	VALVE SIZE	ASME CLASS	ISTC CAT	ISO VALVE TYPE	TEST TYPE	TEST POS	TEST FREQ	RE REQ V-	CS JUST CSV-	RR JUST RRV-	NC ALT TEST VNC-
2-QS-MOV-201B	12050-CBM-091A	2 OF 4	E5	MO GATE	8	2	A	CIV	EV	C	03				
										O	03				
									LT	C	OPB				
									ST	C	03				
										O	03				
									VP	OC	24				
	"B" QUENCH SPRAY PUMP DISCHARGE ISOLATION VALVE, OUTSIDE CONTAINMENT ISOLATION VALVE														
2-QS-MOV-202A	12050-CBM-091A	1 OF 4	D5	MO GATE	6	2	B		EV	O	CS		15		
									ST	O	CS		15		
									VP	OC	24				
	CHEMICAL ADDITION TANK DISCHARGE ISOLATION VALVE														
2-QS-MOV-202B	12050-CBM-091A	1 OF 4	D6	MO GATE	6	2	B		EV	O	CS		15		
									ST	O	CS		15		
									VP	OC	24				
	CHEMICAL ADDITION TANK DISCHARGE ISOLATION VALVE														

NORTH ANNA UNIT 2
FOURTH INSERVICE TESTING INTERVAL
VALVE INSERVICE TEST TABLE

VALVE NUMBER	DRAWING NUMBER	SHEET	COOR	VALVE TYPE	VALVE SIZE	ASME CLASS	ISTC CAT	ISO VALVE TYPE	TEST TYPE	TEST POS	TEST FREQ	RE REQ V-	CS JUST CSV-	RR JUST RRV-	NC ALT TEST VNC-
2-RC-143	12050-CBM-093B	1 OF 3	A4	MANUAL	0.125	1	AE	CIV	LT	C	OPB				
	PRESSURIZER PRESSURE DEAD WEIGHT TESTER ISOLATION, OUTSIDE CONT ISOLATION VALVE														
2-RC-145	12050-CBM-093B	1 OF 3	A3	MANUAL	0.125	1	AE	CIV	LT	C	OPB				
	PRESSURIZER PRESSURE DEAD WEIGHT TESTER ISOLATION, OUTSIDE CONT ISOLATION VALVE														
2-RC-162	12050-CBM-093B	2 OF 3	D7	CHECK VALVE	3	2	AC	CIV	CV	C	RR			6	
										O	RR			6	
									LT	C	OPB				
	PRIMARY GRADE WATER SUPPLY TO PRT-#2 RCP SEAL STANDPIPES/FLUSH CONNECT, INSIDE CONT ISO VLV														
2-RC-HCV-2556A	12050-CBM-093A	1 OF 3	D7	AO GLOBE	2	1	E		VP	OC	24				
	RCS LOOP FILL BOUNDARY VALVE														
2-RC-HCV-2556B	12050-CBM-093A	2 OF 3	D8	AO GLOBE	2	1	E		VP	OC	24				
	RCS LOOP FILL BOUNDARY VALVE														
2-RC-HCV-2556C	12050-CBM-093A	3 OF 3	D3	AO GLOBE	2	1	E		VP	OC	24				
	RCS LOOP FILL BOUNDARY VALVE														
2-RC-MOV-2535	12050-CBM-093B	1 OF 3	E4	MO GATE	3	1	B		EV	C	03				
										O	03				
									ST	C	03				
										O	03				
									VP	OC	24				
	BLOCK VALVE FOR PRESSURIZER POWER OPERATED RELIEF VALVE														
2-RC-MOV-2536	12050-CBM-093B	1 OF 3	D4	MO GATE	3	1	B		EV	C	03				
										O	03				
									ST	C	03				
										O	03				
									VP	OC	24				
	BLOCK VALVE FOR PRESSURIZER POWER OPERATED RELIEF VALVE														
2-RC-PCV-2455C	12050-CBM-093B	1 OF 3	D3	AO GLOBE	3	1	BC		EV	C	CS		13		

NORTH ANNA UNIT 2
FOURTH INSERVICE TESTING INTERVAL
VALVE INSERVICE TEST TABLE

VALVE NUMBER	DRAWING NUMBER	SHEET	COOR	VALVE TYPE	VALVE SIZE	ASME CLASS	ISTC CAT	ISO VALVE TYPE	TEST TYPE	TEST POS	TEST FREQ	RE REQ V-	CS JUST CSV-	RR JUST RRV-	NC ALT TEST VNC-
2-RC-PCV-2455C	12050-CBM-093B	1 OF 3	D3	AO GLOBE	3	1	BC		EV	O	CS		13		
									FS	C	CS		13		
									ST	C	CS		13		
										O	CS		13		
									VP	OC	24				
	PRESSURIZER POWER OPERATED PRESSURE CONTROL VALVE DISCHARGE TO PRESSURIZER RELIEF TANK														
2-RC-PCV-2456	12050-CBM-093B	1 OF 3	E3	AO GLOBE	3	1	BC		EV	C	CS		13		
										O	CS		13		
									FS	C	CS		13		
									ST	C	CS		13		
										O	CS		13		
									VP	OC	24				
	PRESSURIZER POWER OPERATED PRESSURE CONTROL VALVE DISCHARGE TO PRESSURIZER RELIEF TANK														
2-RC-SOV-201A-1	12050-CBM-093A	3 OF 3	B5	SO GLOBE	1	1	B		EV	C	CS		18		
										O	CS		18		
									FS	C	CS		18		
									ST	C	CS		18		
										O	CS		18		
									VP	OC	24				
	REACTOR VESSEL VENT LINE ISOLATION VALVE TO REFUELING CAVITY														
2-RC-SOV-201A-2	12050-CBM-093A	3 OF 3	A5	SO GLOBE	1	1	B		EV	C	CS		18		
										O	CS		18		
									FS	C	CS		18		
									ST	C	CS		18		
										O	CS		18		
									VP	OC	24				
	REACTOR VESSEL VENT LINE ISOLATION VALVE TO REFUELING CAVITY														
2-RC-SOV-201B-1	12050-CBM-093A	3 OF 3	B5	SO GLOBE	1	1	B		EV	C	CS		18		
										O	CS		18		

NORTH ANNA UNIT 2
FOURTH INSERVICE TESTING INTERVAL
VALVE INSERVICE TEST TABLE

VALVE NUMBER	DRAWING NUMBER	SHEET	COOR	VALVE TYPE	VALVE SIZE	ASME CLASS	ISTC CAT	ISO VALVE TYPE	TEST TYPE	TEST POS	TEST FREQ	RE REQ V-	CS JUST CSV-	RR JUST RRV-	NC ALT TEST VNC-
2-RC-SOV-201B-1	12050-CBM-093A	3 OF 3	B5	SO GLOBE	1	1	B		FS	C	CS		18		
									ST	C	CS		18		
										O	CS		18		
									VP	OC	24				
	REACTOR VESSEL VENT LINE ISOLATION VALVE TO REFUELING CAVITY														
2-RC-SOV-201B-2	12050-CBM-093A	3 OF 3	A5	SO GLOBE	1	1	B		EV	C	CS		18		
										O	CS		18		
									FS	C	CS		18		
									ST	C	CS		18		
										O	CS		18		
									VP	OC	24				
	REACTOR VESSEL VENT LINE ISOLATION VALVE TO REFUELING CAVITY														
2-RC-SV-2551A	12050-CBM-093B	1 OF 3	E5	SAFETY	6	1	C		SP	O	60				
	PRESSURIZER SAFETY VALVE, SV DISCHARGE TO PRESSURIZER RELIEF TANK														
2-RC-SV-2551B	12050-CBM-093B	1 OF 3	E5	SAFETY	6	1	C		SP	O	60				
	PRESSURIZER SAFETY VALVE, SV DISCHARGE TO PRESSURIZER RELIEF TANK														
2-RC-SV-2551C	12050-CBM-093B	1 OF 3	E6	SAFETY	6	1	C		SP	O	60				
	PRESSURIZER SAFETY VALVE, SV DISCHARGE TO PRESSURIZER RELIEF TANK														
2-RC-TV-2519A	12050-CBM-093B	2 OF 3	D8	AO DIAPHRAGM	3	2	A	CIV	EV	C	03				
									FS	C	03				
									LT	C	OPB				
									ST	C	03				
									VP	OC	24				
	PRIMARY GRADE WATER SUPPLY TO PRT-#2 RCP SEAL STANDPIPES & FLUSH CONNECT, OUT CONT ISO VLV														

NORTH ANNA UNIT 2
FOURTH INSERVICE TESTING INTERVAL
VALVE INSERVICE TEST TABLE

VALVE NUMBER	DRAWING NUMBER	SHEET	COOR	VALVE TYPE	VALVE SIZE	ASME CLASS	ISTC CAT	ISO VALVE TYPE	TEST TYPE	TEST POS	TEST FREQ	RE REQ V-	CS JUST CSV-	RR JUST RRV-	NC ALT TEST VNC-
2-RH-007	12050-CBM-094A	1 OF 2	E7	CHECK VALVE	10	2	C		CV	C	CS		16		
										O	CS		16		
	"A" RHR PUMP DISCHARGE CHECK VALVE														
2-RH-015	12050-CBM-094A	1 OF 2	E5	CHECK VALVE	10	2	C		CV	C	CS		16		
										O	CS		16		
	"B" RHR PUMP DISCHARGE CHECK VALVE														
2-RH-037	12050-CBM-094A	2 OF 2	C4	MANUAL GATE	6	2	AE	CIV	LT	C	OPB				
	RHR SUPPLY ISOLATION TO REFUEL WATER STORAGE TANK, INSIDE CONTAINMENT ISOLATION VALVE														
2-RH-038	12050-CBM-094A	2 OF 2	D3	MANUAL GATE	6	2	AE	CIV	LT	C	OPB				
	RHR SUPPLY ISOLATION TO REFUEL WATER STORAGE TANK, OUTSIDE CONTAINMENT ISOLATION VALVE														
2-RH-MOV-2700	12050-CBM-094A	1 OF 2	A5	MO GATE	14	1	A	PIV	EV	O	RR			37	
									LT	C	24				
									ST	O	RR			37	
									VP	OC	24				
	RHR PUMP SUPPLY ISOLATION FROM "A" HOT LEG, INSIDE MISSILE BARRIER														
2-RH-MOV-2701	12050-CBM-094A	1 OF 2	A4	MO GATE	14	1	A	PIV	EV	O	RR			37	
									LT	C	24				
									ST	O	RR			37	
									VP	OC	24				
	RHR PUMP SUPPLY ISOLATION FROM "A" HOT LEG, OUTSIDE MISSILE BARRIER														
2-RH-MOV-2720A	12050-CBM-094A	2 OF 2	C3	MO GATE	10	1	A	PIV	EV	O	RR			37	
									LT	C	24				
									ST	O	RR			37	
									VP	OC	24				
	RHR RETURN ISOLATION TO "B" ACCUMULATOR DISCHARGE LINE														
2-RH-MOV-2720B	12050-CBM-094A	2 OF 2	B3	MO GATE	10	1	A	PIV	EV	O	RR			37	
									LT	C	24				
									ST	O	RR			37	

NORTH ANNA UNIT 2
FOURTH INSERVICE TESTING INTERVAL
VALVE INSERVICE TEST TABLE

VALVE NUMBER	DRAWING NUMBER	SHEET	COOR	VALVE TYPE	VALVE SIZE	ASME CLASS	ISTC CAT	ISO VALVE TYPE	TEST TYPE	TEST POS	TEST FREQ	RE REQ V-	CS JUST CSV-	RR JUST RRV-	NC ALT TEST VNC-
2-RH-MOV-2720B	12050-CBM-094A	2 OF 2	B3	MO GATE	10	1	A	PIV	VP	OC	24				
	RHR RETURN ISOLATION TO "C" ACCUMULATOR DISCHARGE LINE														
2-RH-RV-2721A	12050-CBM-094A	1 OF 2	E6	RELIEF VALVE	3	2	C		SP	O	120	3			
	RHR SYSTEM RELIEF VALVE AT "A" RHR PUMP SUCTION, RV DISCHARGE TO PRESSURIZER RELIEF TANK														
2-RH-RV-2721B	12050-CBM-094A	1 OF 2	E4	RELIEF VALVE	3	2	C		SP	O	120	3			
	RHR SYSTEM RELIEF VALVE AT "B" RHR PUMP SUCTION, RV DISCHARGE TO PRESSURIZER RELIEF TANK														

NORTH ANNA UNIT 2
FOURTH INSERVICE TESTING INTERVAL
VALVE INSERVICE TEST TABLE

VALVE NUMBER	DRAWING NUMBER	SHEET	COOR	VALVE TYPE	VALVE SIZE	ASME CLASS	ISTC CAT	ISO VALVE TYPE	TEST TYPE	TEST POS	TEST FREQ	RE REQ V-	CS JUST CSV-	RR JUST RRV-	NC ALT TEST VNC-
2-RM-TV-200A	12050-CBM-082B	2 OF 3	C7	AO GLOBE	1	2	A	CIV	EV	C	03				
									FS	C	03				
									LT	C	OPB				
									ST	C	03				
									VP	OC	24				
	RETURN ISOLATION FROM AIR RADIATION MONITOR TO CONTAINMENT, OUTSIDE CONT ISOLATION VALVE														
2-RM-TV-200B	12050-CBM-082B	2 OF 3	D7	AO GLOBE	1	2	A	CIV	EV	C	03				
									FS	C	03				
									LT	C	OPB				
									ST	C	03				
									VP	OC	24				
	SUPPLY ISOL TO AIR RAD MONITOR FROM CONTAIN- MENT VENT DUCT, OUTSIDE CONT ISOLATION VALVE														
2-RM-TV-200C	12050-CBM-082B	2 OF 3	D8	AO GLOBE	1	2	A	CIV	EV	C	03				
									FS	C	03				
									LT	C	OPB				
									ST	C	03				
									VP	OC	24				
	SUPPLY ISOL TO AIR RAD MONITOR FROM CONTAIN- MENT VENT DUCT, INSIDE CONT ISOLATION VALVE														
2-RM-TV-200D	12050-CBM-082B	2 OF 3	C7	AO GLOBE	1	2	B		EV	C	03				
									FS	C	03				
									ST	C	03				
									VP	OC	24				
	RETURN ISOL FROM AIR RADIATION MONITOR TO CONTAINMENT, OUTSIDE CONT ISOLATION VALVE														

NORTH ANNA UNIT 2
FOURTH INSERVICE TESTING INTERVAL
VALVE INSERVICE TEST TABLE

VALVE NUMBER	DRAWING NUMBER	SHEET	COOR	VALVE TYPE	VALVE SIZE	ASME CLASS	ISTC CAT	ISO VALVE TYPE	TEST TYPE	TEST POS	TEST FREQ	RE REQ V-	CS JUST CSV-	RR JUST RRV-	NC ALT TEST VNC-
1-RP-050	11715-CBM-088A REFUELING PURIFICATION FROM REACTOR CAVITY TO RP PUMPS, OUTSIDE CONT ISOLATION VALVE	3 OF 4	C7	MANUAL DIA	6	2	AE	CIV	LT	C	OPB				
1-RP-084	11715-CBM-088A REFUELING PURIFICATION FROM RP PUMPS TO REACTOR CAVITY, OUTSIDE CONT ISOLATION VALVE	3 OF 4	D7	MANUAL DIA	6	2	AE	CIV	LT	C	OPB				
2-RP-006	11715-CBM-088A REFUELING PURIFICATION FROM REACTOR CAVITY TO RP PUMPS, INSIDE CONT ISOLATION VALVE	3 OF 4	C5	MANUAL DIA	6	2	AE	CIV	LT	C	OPB				
2-RP-007	11715-CBM-088A REFUELING PURIFICATION FROM RP PUMPS TO REACTOR CAVITY, INSIDE CONT ISOLATION VALVE	3 OF 4	D5	MANUAL DIA	6	2	AE	CIV	LT	C	OPB				

NORTH ANNA UNIT 2
FOURTH INSERVICE TESTING INTERVAL
VALVE INSERVICE TEST TABLE

VALVE NUMBER	DRAWING NUMBER	SHEET	COOR	VALVE TYPE	VALVE SIZE	ASME CLASS	ISTC CAT	ISO VALVE TYPE	TEST TYPE	TEST POS	TEST FREQ	RE REQ V-	CS JUST CSV-	RR JUST RRV-	NC ALT TEST VNC-
2-RS-020	12050-CBM-091A	4 OF 4	D6	WL CHECK	10	2	C		CV	C	RR			22	
										O	RR			22	
	"A" OUTSIDE RECIRC SPRAY PUMP INSIDE CONTAINMENT ISOLATION CHECK VALVE														
2-RS-030	12050-CBM-091A	4 OF 4	D6	WL CHECK	10	2	C		CV	C	RR			22	
										O	RR			22	
	"B" OUTSIDE RECIRC SPRAY PUMP INSIDE CONTAINMENT ISOLATION CHECK VALVE														
2-RS-103	12050-CBM-091B	1 OF 1	E7	CHECK VALVE	8	2	C		CV	C	RR			27	
										O	RR			27	
	"A" CASING COOLING PUMP DISCHARGE CHECK VALVE TO "A" OUTSIDE RECIRC SPRAY PUMP SUCT														
2-RS-118	12050-CBM-091B	1 OF 1	F7	CHECK VALVE	8	2	C		CV	C	RR			27	
										O	RR			27	
	"B" CASING COOLING PUMP DISCHARGE CHECK VALVE TO "B" OUTSIDE RECIRC SPRAY PUMP SUCT														
2-RS-MOV-200A	12050-CBM-091B	1 OF 1	E7	MO GATE	8	2	B		EV	C	03				
										O	03				
									ST	C	03				
										O	03				
									VP	OC	24				
	"A" CASING COOLING PUMP DISCHARGE ISOLATION TO "A" OUTSIDE RECIRC SPRAY PUMP SUCTION														
2-RS-MOV-200B	12050-CBM-091B	1 OF 1	F7	MO GATE	6	2	B		EV	C	03				
										O	03				
									ST	C	03				
										O	03				
									VP	OC	24				
	"B" CASING COOLING PUMP DISCHARGE ISOLATION TO "B" OUTSIDE RECIRC SPRAY PUMP SUCTION														
2-RS-MOV-201A	12050-CBM-091B	1 OF 1	E7	MO GATE	6	3	B		EV	C	03				

NORTH ANNA UNIT 2
FOURTH INSERVICE TESTING INTERVAL
VALVE INSERVICE TEST TABLE

VALVE NUMBER	DRAWING NUMBER	SHEET	COOR	VALVE TYPE	VALVE SIZE	ASME CLASS	ISTC CAT	ISO VALVE TYPE	TEST TYPE	TEST POS	TEST FREQ	RE REQ V-	CS JUST CSV-	RR JUST RRV-	NC ALT TEST VNC-
2-RS-MOV-201A	12050-CBM-091B	1 OF 1	E7	MO GATE	6	3	B		EV	O	03				
									ST	C	03				
										O	03				
									VP	OC	24				
	"A" CASING COOLING PUMP DISCHARGE ISOLATION TO "A" OUTSIDE RECIRC SPRAY PUMP SUCTION														
2-RS-MOV-201B	12050-CBM-091B	1 OF 1	F7	MO GATE	6	3	B		EV	C	03				
										O	03				
									ST	C	03				
										O	03				
									VP	OC	24				
	"B" CASING COOLING PUMP DISCHARGE ISOLATION TO "B" OUTSIDE RECIRC SPRAY PUMP SUCTION														
2-RS-MOV-255A	12050-CBM-091A	4 OF 4	B5	MO GATE	12	2	B		EV	C	03				
										O	03				
									ST	C	03				
										O	03				
									VP	OC	24				
	"A" OUTSIDE RECIRC SPRAY PUMP SUCTION ISOLAT VALVE FROM CONTAINMENT SUMP & CASING COOLING														
2-RS-MOV-255B	12050-CBM-091A	4 OF 4	A5	MO GATE	12	2	B		EV	C	03				
										O	03				
									ST	C	03				
										O	03				
									VP	OC	24				
	"B" OUTSIDE RECIRC SPRAY PUMP SUCTION ISOLAT VALVE FROM CONTAINMENT SUMP & CASING COOLING														
2-RS-MOV-256A	12050-CBM-091A	4 OF 4	D5	MO GATE	10	2	B		EV	C	03				
										O	03				
									ST	C	03				
										O	03				
									VP	OC	24				

NORTH ANNA UNIT 2
FOURTH INSERVICE TESTING INTERVAL
VALVE INSERVICE TEST TABLE

VALVE NUMBER	DRAWING NUMBER	SHEET	COOR	VALVE TYPE	VALVE SIZE	ASME CLASS	ISTC CAT	ISO VALVE TYPE	TEST TYPE	TEST POS	TEST FREQ	RE REQ V-	CS JUST CSV-	RR JUST RRV-	NC ALT TEST VNC-
	"A" OUTSIDE RECIRC SPRAY PUMP DISCHARGE ISOLATION, OUTSIDE CONTAINMENT ISOLATION VALVE														
2-RS-MOV-256B	12050-CBM-091A	4 OF 4	D5	MO GATE	10	2	B		EV	C	03				
										O	03				
									ST	C	03				
										O	03				
									VP	OC	24				
	"B" OUTSIDE RECIRC SPRAY PUMP DISCHARGE ISOLATION, OUTSIDE CONTAINMENT ISOLATION VALVE														

NORTH ANNA UNIT 2
FOURTH INSERVICE TESTING INTERVAL
VALVE INSERVICE TEST TABLE

VALVE NUMBER	DRAWING NUMBER	SHEET	COOR	VALVE TYPE	VALVE SIZE	ASME CLASS	ISTC CAT	ISO VALVE TYPE	TEST TYPE	TEST POS	TEST FREQ	RE REQ V-	CS JUST CSV-	RR JUST RRV-	NC ALT TEST VNC-
2-SA-065	12050-CBM-082F	2 OF 2	B7	MAN GATE	2	2	AE	CIV	LT	C	OPB				
	SERVICE AIR SUPPLY TO UNIT 1 CONTAINMENT, OUTSIDE CONTAINMENT ISOLATION VALVE														
2-SA-123	12050-CBM-082F	2 OF 2	D6	MANUAL GATE	2	2	AE	CIV	LT	C	OPB				
	SERVICE AIR SUPPLY TO UNIT 1 CONTAINMENT, INSIDE CONTAINMENT ISOLATION VALVE														

NORTH ANNA UNIT 2
FOURTH INSERVICE TESTING INTERVAL
VALVE INSERVICE TEST TABLE

VALVE NUMBER	DRAWING NUMBER	SHEET	COOR	VALVE TYPE	VALVE SIZE	ASME CLASS	ISTC CAT	ISO VALVE TYPE	TEST TYPE	TEST POS	TEST FREQ	RE REQ V-	CS JUST CSV-	RR JUST RRV-	NC ALT TEST VNC-
2-SI-001	12050-CBM-096A	1 OF 3	B6	CHECK VALVE	12	2	C		CV	C	RR			28	
										O	RR			28	
	"A" LOW HEAD SI PUMP SUCTION CHECK VALVE FROM CONTAINMENT SUMP														
2-SI-006	12050-CBM-096A	1 OF 3	C7	CHECK VALVE	0.75	2	AC		CV	C	RR			19	
										O	RR			19	
									LT	C	24				
	"A" LOW HEAD SI PUMP SEAL WATER SUPPLY CHECK VALVE FROM RWST														
2-SI-009	12050-CBM-096A	2 OF 3	B6	CHECK VALVE	10	2	C		CV	C	RR			9	
										O	RR			9	
	"A" LOW HEAD SI PUMP DISCHARGE CHECK VALVE														
2-SI-012	12050-CBM-096A	2 OF 3	B5	CHECK VALVE	2	2	C		CV	C	RR			9	
										O	03				
	"A" LOW HEAD SI PUMP MINIMUM FLOW/TEST LINE DISCHARGE CHECK VALVE														
2-SI-018	12050-CBM-096A	1 OF 3	E5	CHECK VALVE	8	2	AC		CV	C	RR			10	
										O	RR			10	
									LT	C	24	1			
	RWST SUPPLY CHECK VALVE TO CHARGING PUMP SUCTION HEADER														
2-SI-019	12050-CBM-096A	1 OF 3	B3	CHECK VALVE	12	2	C		CV	C	RR			9	
										O	RR			9	
	RWST SUPPLY CHECK VALVE TO "B" LOW HEAD SI PUMP SUCTION														
2-SI-021	12050-CBM-096A	1 OF 3	B4	CHECK VALVE	12	2	C		CV	C	RR			28	
										O	RR			28	
	"B" LOW HEAD SI PUMP SUCTION CHECK VALVE FROM CONTAINMENT SUMP														
2-SI-029	12050-CBM-096A	1 OF 3	C5	CHECK VALVE	0.75	2	AC		CV	C	RR			19	
										O	RR			19	
									LT	C	24				
	"B" LOW HEAD SI PUMP SEAL WATER SUPPLY CHECK VALVE														

NORTH ANNA UNIT 2
FOURTH INSERVICE TESTING INTERVAL
VALVE INSERVICE TEST TABLE

VALVE NUMBER	DRAWING NUMBER	SHEET	COOR	VALVE TYPE	VALVE SIZE	ASME CLASS	ISTC CAT	ISO VALVE TYPE	TEST TYPE	TEST POS	TEST FREQ	RE REQ V-	CS JUST CSV-	RR JUST RRV-	NC ALT TEST VNC-
2-SI-032	12050-CBM-096A	2 OF 3	B4	CHECK VALVE	10	2	C		CV	C	RR			9	
										O	RR			9	
	"B" LOW HEAD SI PUMP DISCHARGE CHECK VALVE														
2-SI-035	12050-CBM-096A	2 OF 3	B4	CHECK VALVE	2	2	C		CV	C	RR			9	
										O	03				
	"B" LOW HEAD SI PUMP MINIMUM FLOW/TEST LINE DISCHARGE CHECK VALVE														
2-SI-047	12050-CBM-096A	1 OF 3	E7	MANUAL	1	2	AE	CIV	LT	C	OPB				
	ACCUMULATOR MAKEUP LINE, OUTSIDE CONTAINMENT ISOLATION VALVE														
2-SI-070	12050-CBM-096A	3 OF 3	E4	CHECK VALVE	1	2	C		CV	C	RR			25	
										O	RR	TP-01		25	
	BORON INJECTION TANK SUPPLY CHECK VALVE FROM BORIC ACID TRANSFER PUMPS														
2-SI-085	12050-CBM-096B	4 OF 4	F3	CHECK VALVE	3	1	AC	PIV	CV	C	RR			14	
										O	RR			14	
									LT	C	24				
	HIGH HEAD SI FROM CHARGING PUMPS TO RCS COLD LEGS, INSIDE CONT ISOLATION CHECK VALVE														
2-SI-090	12050-CBM-096B	4 OF 4	F7	CHECK VALVE	2	1	C		CV	C	RR			15	
										O	RR			15	
	HIGH HEAD SI TO "A" RCS COLD LEG, INSIDE MISSILE BARRIER CHECK VALVE														
2-SI-091	12050-CBM-096B	4 OF 4	F6	CHECK VALVE	6	1	AC	PIV	CV	C	RR			12	
										O	RR			12	
									LT	C	24				
	LOW HEAD SI TO "A" RCS COLD LEG, INSIDE CONTAINMENT ISOLATION CHECK VALVE														
2-SI-092	12050-CBM-096B	4 OF 4	F8	CHECK VALVE	6	1	C		CV	C	RR			12	
										O	RR			12	

NORTH ANNA UNIT 2
FOURTH INSERVICE TESTING INTERVAL
VALVE INSERVICE TEST TABLE

VALVE NUMBER	DRAWING NUMBER	SHEET	COOR	VALVE TYPE	VALVE SIZE	ASME CLASS	ISTC CAT	ISO VALVE TYPE	TEST TYPE	TEST POS	TEST FREQ	RE REQ V-	CS JUST CSV-	RR JUST RRV-	NC ALT TEST VNC-
	"A" RCS COLD LEG SI ADMISSION CHECK VALVE														
2-SI-093	12050-CBM-096B	4 OF 4	E3	CHECK VALVE	3	1	AC	PIV	CV	C	RR			14	
										O	RR			14	
									LT	C	24				
	HIGH HEAD SI FROM CHARGING PUMPS TO RCS COLD LEGS, INSIDE CONT ISOLATION CHECK VALVE														
2-SI-098	12050-CBM-096B	4 OF 4	E7	CHECK VALVE	2	1	C		CV	C	RR			15	
										O	RR			15	
	HIGH HEAD SI TO "B" RCS COLD LEG, INSIDE MISSILE BARRIER CHECK VALVE														
2-SI-099	12050-CBM-096B	4 OF 4	E6	CHECK VALVE	6	1	AC	PIV	CV	C	RR			12	
										O	RR			12	
									LT	C	24				
	LOW HEAD SI TO "B" RCS COLD LEG, INSIDE CONTAINMENT ISOLATION CHECK VALVE														
2-SI-100	12050-CBM-096B	4 OF 4	E7	CHECK VALVE	6	1	C		CV	C	RR			12	
										O	RR			12	
	"B" RCS COLD LEG SI ADMISSION CHECK VALVE														
2-SI-104	12050-CBM-096B	4 OF 4	D7	CHECK VALVE	2	1	C		CV	C	RR			15	
										O	RR			15	
	HIGH HEAD SI TO "C" RCS COLD LEG, INSIDE MISSILE BARRIER CHECK VALVE														
2-SI-105	12050-CBM-096B	4 OF 4	D6	CHECK VALVE	6	1	AC	PIV	CV	C	RR			12	
										O	RR			12	
									LT	C	24				
	LOW HEAD SI TO "C" RCS COLD LEG, INSIDE CONTAINMENT ISOLATION CHECK VALVE														
2-SI-106	12050-CBM-096B	4 OF 4	D7	CHECK VALVE	6	1	C		CV	C	RR			12	
										O	RR			12	
	"C" RCS COLD LEG SI ADMISSION CHECK VALVE														
2-SI-107	12050-CBM-096B	4 OF 4	D3	CHECK VALVE	3	1	AC	PIV	CV	C	RR			14	
										O	RR			14	

NORTH ANNA UNIT 2
FOURTH INSERVICE TESTING INTERVAL
VALVE INSERVICE TEST TABLE

VALVE NUMBER	DRAWING NUMBER	SHEET	COOR	VALVE TYPE	VALVE SIZE	ASME CLASS	ISTC CAT	ISO VALVE TYPE	TEST TYPE	TEST POS	TEST FREQ	RE REQ V-	CS JUST CSV-	RR JUST RRV-	NC ALT TEST VNC-
2-SI-107	12050-CBM-096B	4 OF 4	D3	CHECK VALVE	3	1	AC	PIV	LT	C	24				
	HIGH HEAD SI FROM CHARGING PUMPS TO RCS HOT LEGS, INSIDE CONT ISOLATION CHECK VALVE														
2-SI-112	12050-CBM-096B	4 OF 4	C7	CHECK VALVE	6	1	C		CV	C	RR			14	
										O	RR			14	
	LOW HEAD SAFETY INJECTION SUPPLY CHECK VALVE TO "C" RCS HOT LEG														
2-SI-113	12050-CBM-096B	4 OF 4	C7	CHECK VALVE	6	1	C		CV	C	RR			14	
										O	RR			14	
	"B" RCS HOT LEG SI ADMISSION CHECK VALVE														
2-SI-117	12050-CBM-096B	4 OF 4	C7	CHECK VALVE	6	1	C		CV	C	RR			14	
										O	RR			14	
	LOW HEAD SAFETY INJECTION SUPPLY CHECK VALVE TO "B" RCS HOT LEG														
2-SI-118	12050-CBM-096B	4 OF 4	B7	CHECK VALVE	6	1	C		CV	C	RR			14	
										O	RR			14	
	"A" RCS HOT LEG SI ADMISSION CHECK VALVE														
2-SI-119	12050-CBM-096B	4 OF 4	C3	CHECK VALVE	3	1	AC	PIV	CV	C	RR			14	
										O	RR			14	
									LT	C	24				
	HIGH HEAD SI FROM CHARGING PUMPS TO RCS HOT LEGS, INSIDE CONT ISOLATION CHECK VALVE														
2-SI-124	12050-CBM-096B	4 OF 4	B7	CHECK VALVE	6	1	C		CV	C	RR			14	
										O	RR			14	
	LOW HEAD SAFETY INJECTION SUPPLY CHECK VALVE TO "A" RCS HOT LEG														
2-SI-125	12050-CBM-096B	4 OF 4	D7	CHECK VALVE	6	1	C		CV	C	RR			14	
										O	RR			14	
	"C" RCS HOT LEG SI ADMISSION CHECK VALVE														
2-SI-126	12050-CBM-096B	4 OF 4	B3	CHECK VALVE	6	1	AC	PIV	CV	C	RR			14	
										O	RR			14	
									LT	C	24				

NORTH ANNA UNIT 2
FOURTH INSERVICE TESTING INTERVAL
VALVE INSERVICE TEST TABLE

VALVE NUMBER	DRAWING NUMBER	SHEET	COOR	VALVE TYPE	VALVE SIZE	ASME CLASS	ISTC CAT	ISO VALVE TYPE	TEST TYPE	TEST POS	TEST FREQ	RE REQ V-	CS JUST CSV-	RR JUST RRV-	NC ALT TEST VNC-
	LOW HEAD SI FROM "A" LHSI PUMP TO RCS HOT LEGS, INSIDE CONT ISOLATION CHECK VALVE														
2-SI-128	12050-CBM-096B	4 OF 4	B3	CHECK VALVE	6	1	AC	PIV	CV	C	RR			14	
										O	RR			14	
									LT	C	24				
	LOW HEAD SI FROM "B" LHSI PUMP TO RCS HOT LEGS, INSIDE CONT ISOLATION CHECK VALVE														
2-SI-132	12050-CBM-096B	1 OF 4	F4	CHECK VALVE	1	2	AC	CIV	CV	C	RR			11	
										O	RR	TP-01		11	
									LT	C	OPB				
	NITROGEN SUPPLY TO ACCUMULATORS, INSIDE CONTAINMENT ISOLATION CHECK VALVE														
2-SI-136	12050-CBM-096B	1 OF 4	D3	CHECK VALVE	1	2	AC	CIV	CV	C	RR			11	
										O	RR	TP-01		11	
									LT	C	OPB				
	ACCUMULATOR MAKE UP LINE, INSIDE CONTAINMENT ISOLATION CHECK VALVE														
2-SI-151	12050-CBM-096B	1 OF 4	B7	CHECK VALVE	12	1	AC	PIV	CV	C	RR			13	
										O	RR			13	
									LT	C	24				
	"A" ACCUMULATOR DISCHARGE CHECK VALVE														
2-SI-153	12050-CBM-096B	1 OF 4	B8	CHECK VALVE	12	1	AC	PIV	CV	C	RR			13	
										O	RR			13	
									LT	C	24				
	"A" ACCUMULATOR COLD LEG ADMISSION CHECK VALVE														
2-SI-168	12050-CBM-096B	2 OF 4	B5	CHECK VALVE	12	1	AC	PIV	CV	C	RR			13	
										O	RR			13	
									LT	C	24				
	"B" ACCUMULATOR DISCHARGE CHECK VALVE														
2-SI-170	12050-CBM-096B	2 OF 4	B7	CHECK VALVE	12	1	AC	PIV	CV	C	RR			13	
										O	RR			13	
									LT	C	24				

NORTH ANNA UNIT 2
FOURTH INSERVICE TESTING INTERVAL
VALVE INSERVICE TEST TABLE

VALVE NUMBER	DRAWING NUMBER	SHEET	COOR	VALVE TYPE	VALVE SIZE	ASME CLASS	ISTC CAT	ISO VALVE TYPE	TEST TYPE	TEST POS	TEST FREQ	RE REQ V-	CS JUST CSV-	RR JUST RRV-	NC ALT TEST VNC-
	"B" ACCUMULATOR COLD LEG ADMISSION CHECK VALVE														
2-SI-185	12050-CBM-096B	3 OF 4	B5	CHECK VALVE	12	1	AC	PIV	CV	C	RR			13	
										O	RR			13	
									LT	C	24				
	"C" ACCUMULATOR DISCHARGE CHECK VALVE														
2-SI-187	12050-CBM-096B	3 OF 4	B7	CHECK VALVE	12	1	AC	PIV	CV	C	RR			13	
										O	RR			13	
									LT	C	24				
	"C" ACCUMULATOR COLD LEG ADMISSION CHECK VALVE														
2-SI-HCV-2936	12050-CBM-096B	1 OF 4	E5	AO GLOBE	1	2	A	CIV	EV	C	03				
									FS	C	03				
									LT	C	OPB				
									ST	C	NA	2			
									VP	OC	24				
	WASTE GAS FROM ACCUMULATORS TO CHARCOAL FILTERS														
2-SI-MOV-2836	12050-CBM-096A	3 OF 3	C7	MO GATE	3	1	A	PIV	EV	C	RR			7	
										O	RR			7	
									LT	C	24				
									ST	C	RR			7	
										O	RR			7	
									VP	OC	24				
	HIGH HEAD SI FROM CHARGING HEADER TO RCS COLD LEGS, OUTSIDE CONTAINMENT ISOLATION VALVE														
2-SI-MOV-2860A	12050-CBM-096A	1 OF 3	B7	MO GATE	12	2	B		EV	C	03				
										O	03				
									ST	C	03				
										O	03				
									VP	OC	24				
	"A" LOW HEAD SI PUMP SUCTION ISOLATION FROM CONTAINMENT SUMP														
2-SI-MOV-2860B	12050-CBM-096A	1 OF 3	B5	MO GATE	12	2	B		EV	C	03				

NORTH ANNA UNIT 2
FOURTH INSERVICE TESTING INTERVAL
VALVE INSERVICE TEST TABLE

VALVE NUMBER	DRAWING NUMBER	SHEET	COOR	VALVE TYPE	VALVE SIZE	ASME CLASS	ISTC CAT	ISO VALVE TYPE	TEST TYPE	TEST POS	TEST FREQ	RE REQ V-	CS JUST CSV-	RR JUST RRV-	NC ALT TEST VNC-
2-SI-MOV-2860B	12050-CBM-096A	1 OF 3	B5	MO GATE	12	2	B		EV	O	03				
									ST	C	03				
										O	03				
									VP	OC	24				
	"B" LOW HEAD SI PUMP SUCTION ISOLATION FROM CONTAINMENT SUMP														
2-SI-MOV-2862A	12050-CBM-096A	1 OF 3	A3	MO GATE	10	2	B		EV	C	03				
									ST	C	03				
									VP	OC	24				
	"A" LOW HEAD SI PUMP SUCTION FROM RWST														
2-SI-MOV-2862B	12050-CBM-096A	1 OF 3	B3	MO GATE	10	2	B		EV	C	03				
									ST	C	03				
									VP	OC	24				
	"B" LOW HEAD SI PUMP SUCTION FROM RWST														
2-SI-MOV-2863A	12050-CBM-096A	2 OF 3	C5	MO GATE	8	2	B		EV	C	03				
										O	03				
									ST	C	03				
										O	03				
									VP	OC	24				
	"A" LOW HEAD SAFETY INJECTION PUMP SUPPLY ISOLATION TO CHARGING PUMPS														
2-SI-MOV-2863B	12050-CBM-096A	2 OF 3	D3	MO GATE	8	2	B		EV	C	03				
										O	03				
									ST	C	03				
										O	03				
									VP	OC	24				
	"B" LOW HEAD SAFETY INJECTION PUMP SUPPLY ISOLATION TO CHARGING PUMPS														
2-SI-MOV-2864A	12050-CBM-096A	2 OF 3	C7	MO GATE	10	2	B		EV	C	03				
										O	03				
									ST	C	03				
										O	03				
									VP	OC	24				

NORTH ANNA UNIT 2
FOURTH INSERVICE TESTING INTERVAL
VALVE INSERVICE TEST TABLE

VALVE NUMBER	DRAWING NUMBER	SHEET	COOR	VALVE TYPE	VALVE SIZE	ASME CLASS	ISTC CAT	ISO VALVE TYPE	TEST TYPE	TEST POS	TEST FREQ	RE REQ V-	CS JUST CSV-	RR JUST RRV-	NC ALT TEST VNC-
	"A" LOW HEAD SI PUMP COLD LEG DISCHARGE STOP VALVE														
2-SI-MOV-2864B	12050-CBM-096A	2 OF 3	C6	MO GATE	10	2	B		EV	C	03				
										O	03				
									ST	C	03				
										O	03				
									VP	OC	24				
	"B" LOW HEAD SI PUMP COLD LEG DISCHARGE STOP VALVE														
2-SI-MOV-2865A	12050-CBM-096B	1 OF 4	C7	MO GATE	12	2	B		EV	C	CS		10		
										O	CS		10		
									ST	C	CS		10		
										O	CS		10		
									VP	OC	24				
	"A" ACCUMULATOR DISCHARGE ISOLATION VALVE TO RCS COLD LEG														
2-SI-MOV-2865B	12050-CBM-096B	2 OF 4	C5	MO GATE	12	2	B		EV	C	CS		10		
										O	CS		10		
									ST	C	CS		10		
										O	CS		10		
									VP	OC	24				
	"B" ACCUMULATOR DISCHARGE ISOLATION VALVE TO RCS COLD LEG														
2-SI-MOV-2865C	12050-CBM-096B	3 OF 4	C5	MO GATE	12	2	B		EV	C	CS		10		
										O	CS		10		
									ST	C	CS		10		
										O	CS		10		
									VP	OC	24				
	"C" ACCUMULATOR DISCHARGE ISOLATION VALVE TO RCS COLD LEG														
2-SI-MOV-2867A	12050-CBM-096A	3 OF 3	D4	MO GATE	3	2	B		EV	C	RR			27	
										O	RR			27	
									ST	C	RR			27	
										O	RR			27	
									VP	OC	24				

NORTH ANNA UNIT 2
FOURTH INSERVICE TESTING INTERVAL
VALVE INSERVICE TEST TABLE

VALVE NUMBER	DRAWING NUMBER	SHEET	COOR	VALVE TYPE	VALVE SIZE	ASME CLASS	ISTC CAT	ISO VALVE TYPE	TEST TYPE	TEST POS	TEST FREQ	RE REQ V-	CS JUST CSV-	RR JUST RRV-	NC ALT TEST VNC-
	BORON INJECTION TANK HIGH HEAD SI INLET VALVE														
2-SI-MOV-2867B	12050-CBM-096A	3 OF 3	D4	MO GATE	3	2	B		EV	C	RR			27	
										O	RR			27	
									ST	C	RR			27	
										O	RR			27	
									VP	OC	24				
	BORON INJECTION TANK HIGH HEAD SI INLET VALVE														
2-SI-MOV-2867C	12050-CBM-096A	3 OF 3	E7	MO GATE	3	1	A	PIV	EV	C	RR			8	
										O	RR			8	
									LT	C	24				
									ST	C	RR			8	
										O	RR			8	
									VP	OC	24				
	BORON INJECTION TANK OUTLET TO RCS COLD LEG, OUTSIDE CONTAINMENT ISOLATION VALVE														
2-SI-MOV-2867D	12050-CBM-096A	3 OF 3	D7	MO GATE	3	1	A	PIV	EV	C	RR			8	
										O	RR			8	
									LT	C	24				
									ST	C	RR			8	
										O	RR			8	
									VP	OC	24				
	BORON INJECTION TANK OUTLET TO RCS COLD LEG, OUTSIDE CONTAINMENT ISOLATION VALVE														
2-SI-MOV-2869A	12050-CBM-096A	3 OF 3	C8	MO GATE	3	1	A	PIV	EV	C	RR			7	
										O	RR			7	
									LT	C	24				
									ST	C	RR			7	
										O	RR			7	
									VP	OC	24				
	HIGH HEAD SI FROM CHARGING HEADER TO RCS HOT LEGS, OUTSIDE CONTAINMENT ISOLATION VALVE														
2-SI-MOV-2869B	12050-CBM-096A	3 OF 3	B8	MO GATE	3	1	A	PIV	EV	C	RR			7	
										O	RR			7	

NORTH ANNA UNIT 2
FOURTH INSERVICE TESTING INTERVAL
VALVE INSERVICE TEST TABLE

VALVE NUMBER	DRAWING NUMBER	SHEET	COOR	VALVE TYPE	VALVE SIZE	ASME CLASS	ISTC CAT	ISO VALVE TYPE	TEST TYPE	TEST POS	TEST FREQ	RE REQ V-	CS JUST CSV-	RR JUST RRV-	NC ALT TEST VNC-
2-SI-MOV-2869B	12050-CBM-096A	3 OF 3	B8	MO GATE	3	1	A	PIV	LT	C	24				
									ST	C	RR			7	
										O	RR			7	
									VP	OC	24				
	HIGH HEAD SI FROM CHARGING HEADER TO RCS HOT LEGS, OUTSIDE CONTAINMENT ISOLATION VALVE														
2-SI-MOV-2885A	12050-CBM-096A	2 OF 3	C3	MO GLOBE	2	2	A		EV	C	03				
									LT	C	24	1			
									ST	C	03				
									VP	OC	24				
	"A" LOW HEAD SI PUMP MINIMUM FLOW/TEST LINE ISOLATION														
2-SI-MOV-2885B	12050-CBM-096A	2 OF 3	B3	MO GLOBE	2	2	A		EV	C	03				
									LT	C	24	1			
									ST	C	03				
									VP	OC	24				
	"B" LOW HEAD SI PUMP MINIMUM FLOW/TEST LINE ISOLATION														
2-SI-MOV-2885C	12050-CBM-096A	2 OF 3	D3	MO GLOBE	2	2	A		EV	C	03				
									LT	C	24	1			
									ST	C	03				
									VP	OC	24				
	"A" LOW HEAD SI PUMP MINIMUM FLOW/TEST LINE ISOLATION														
2-SI-MOV-2885D	12050-CBM-096A	2 OF 3	B3	MO GLOBE	2	2	A		EV	C	03				
									LT	C	24	1			
									ST	C	03				
									VP	OC	24				
	"B" LOW HEAD SI PUMP MINIMUM FLOW/TEST LINE ISOLATION														
2-SI-MOV-2890A	12050-CBM-096A	2 OF 3	D7	MO GATE	10	1	A	PIV	EV	C	RR			7	
										O	RR			7	
									LT	C	24				
									ST	C	RR			7	
										O	RR			7	

NORTH ANNA UNIT 2
FOURTH INSERVICE TESTING INTERVAL
VALVE INSERVICE TEST TABLE

VALVE NUMBER	DRAWING NUMBER	SHEET	COOR	VALVE TYPE	VALVE SIZE	ASME CLASS	ISTC CAT	ISO VALVE TYPE	TEST TYPE	TEST POS	TEST FREQ	RE REQ V-	CS JUST CSV-	RR JUST RRV-	NC ALT TEST VNC-
2-SI-MOV-2890A	12050-CBM-096A	2 OF 3	D7	MO GATE	10	1	A	PIV	VP	OC	24				
	"A" LOW HEAD SI PUMP HOT LEG DISCHARGE STOP VALVE, OUTSIDE CONTAINMENT ISOLATION VALVE														
2-SI-MOV-2890B	12050-CBM-096A	2 OF 3	D7	MO GATE	10	1	A	PIV	EV	C	RR			7	
										O	RR			7	
									LT	C	24				
									ST	C	RR			7	
										O	RR			7	
									VP	OC	24				
	"B" LOW HEAD SI PUMP HOT LEG DISCHARGE STOP VALVE, OUTSIDE CONTAINMENT ISOLATION VALVE														
2-SI-MOV-2890C	12050-CBM-096A	2 OF 3	C8	MO GATE	10	1	A	PIV	EV	C	RR			8	
										O	RR			8	
									LT	C	24				
									ST	C	RR			8	
										O	RR			8	
									VP	OC	24				
	LOW HEAD SI PUMPS COLD LEG DISCHARGE STOP VALVE, OUTSIDE CONTAINMENT ISOLATION VALVE														
2-SI-MOV-2890D	12050-CBM-096A	2 OF 3	C7	MO GATE	10	1	A	PIV	EV	C	RR			8	
										O	RR			8	
									LT	C	24				
									ST	C	RR			8	
										O	RR			8	
									VP	OC	24				
	LOW HEAD SI PUMPS COLD LEG DISCHARGE STOP VALVE, OUTSIDE CONTAINMENT ISOLATION VALVE														
2-SI-RV-2845A	12050-CBM-096A	2 OF 3	D6	RELIEF VALVE	0.75	2	C		SP	O	120	3			
	"A" LOW HEAD SI PUMP DISCHARGE RELIEF VALVE, RV DISCHARGE TO SAFEGUARDS AREA SUMP														
2-SI-RV-2845B	12050-CBM-096A	2 OF 3	C7	RELIEF VALVE	0.75	2	C		SP	O	120	3			

NORTH ANNA UNIT 2
FOURTH INSERVICE TESTING INTERVAL
VALVE INSERVICE TEST TABLE

VALVE NUMBER	DRAWING NUMBER	SHEET	COOR	VALVE TYPE	VALVE SIZE	ASME CLASS	ISTC CAT	ISO VALVE TYPE	TEST TYPE	TEST POS	TEST FREQ	RE REQ V-	CS JUST CSV-	RR JUST RRV-	NC ALT TEST VNC-
	LOW HEAD SI HEADER TO COLD LEG RELIEF VALVE, RV DISCHARGE TO SAFEGUARDS AREA SUMP														
2-SI-RV-2845C	12050-CBM-096A	2 OF 3	E7	RELIEF VALVE	0.75	2	C		SP	O	120	3			
	"B" LOW HEAD SI PUMP DISCHARGE RELIEF VALVE, RV DISCHARGE TO SAFEGUARDS AREA SUMP														
2-SI-RV-2857B	12050-CBM-096A	3 OF 3	E7	RELIEF VALVE	0.75	2	C		SP	O	120	3, NOTE 1			
	BORON INJECTION TANK RELIEF VALVE, RV DISCHARGE TO FLOOR DRAIN														
2-SI-RV-2858A	12050-CBM-096B	1 OF 4	E7	RELIEF VALVE	1	2	C		SP	O	120	3			
	"A" ACCUMULATOR RELIEF VALVE														
2-SI-RV-2858B	12050-CBM-096B	2 OF 4	E5	RELIEF VALVE	1	2	C		SP	O	120	3			
	"B" ACCUMULATOR RELIEF VALVE														
2-SI-RV-2858C	12050-CBM-096B	3 OF 4	E5	RELIEF VALVE	1	2	C		SP	O	120	3			
	"C" ACCUMULATOR RELIEF VALVE														
2-SI-TV-200	12050-CBM-096B	1 OF 4	F3	AO GLOBE	1	2	A	CIV	EV	C	03				
									FS	C	03				
									LT	C	OPB				
									ST	C	03				
									VP	OC	24				
	NITROGEN SUPPLY TO ACCUMULATORS, OUTSIDE CONTAINMENT ISOLATION VALVE														
2-SI-TV-201	12050-CBM-096B	1 OF 4	E4	AO GLOBE	1	2	A	CIV	EV	C	03				
									FS	C	03				
									LT	C	OPB				
									ST	C	03				
									VP	OC	24				
	ACCUMULATORS TO WASTE GAS CHARCOAL FILTERS, OUTSIDE CONTAINMENT ISOLATION VALVE														
2-SI-TV-2842	12050-CBM-096B	1 OF 4	D4	AO GLOBE	0.75	2	A	CIV	EV	C	03				
									FS	C	03				
									LT	C	OPB				
									ST	C	03				

NORTH ANNA UNIT 2
FOURTH INSERVICE TESTING INTERVAL
VALVE INSERVICE TEST TABLE

VALVE NUMBER	DRAWING NUMBER	SHEET	COOR	VALVE TYPE	VALVE SIZE	ASME CLASS	ISTC CAT	ISO VALVE TYPE	TEST TYPE	TEST POS	TEST FREQ	RE REQ V-	CS JUST CSV-	RR JUST RRV-	NC ALT TEST VNC-
2-SI-TV-2842	12050-CBM-096B	1 OF 4	D4	AO GLOBE	0.75	2	A	CIV	VP	OC	24				
	ACCUMULATOR TEST LINE, INSIDE CONTAINMENT ISOLATION VALVE														
2-SI-TV-2859	12050-CBM-096A	2 OF 3	F7	AO GLOBE	0.75	2	A	CIV	EV	C	03				
									FS	C	03				
									LT	C	OPB				
									ST	C	03				
									VP	OC	24				
	ACCUMULATOR TEST LINE, OUTSIDE CONTAINMENT ISOLATION VALVE														
2-SI-TV-2884A	12050-CBM-096A	3 OF 3	E4	AO GLOBE	1	2	B		EV	C	03				
									FS	C	03				
									ST	C	03				
									VP	OC	24				
	BORON INJECTION TANK RETURN ISOLATION TO BORIC ACID STORAGE TANK														
2-SI-TV-2884B	12050-CBM-096A	3 OF 3	E4	AO GLOBE	1	2	B		EV	C	03				
									FS	C	03				
									ST	C	03				
									VP	OC	24				
	BORON INJECTION TANK RETURN ISOLATION TO BORIC ACID STORAGE TANK														
2-SI-TV-2884C	12050-CBM-096A	3 OF 3	D4	AO GLOBE	1	3	B		EV	C	03				
									FS	C	03				
									ST	C	03				
									VP	OC	24				
	BORON INJECTION TANK SUPPLY ISOLATION FROM BORIC ACID TRANSFER PUMPS														

NORTH ANNA UNIT 2
FOURTH INSERVICE TESTING INTERVAL
VALVE INSERVICE TEST TABLE

VALVE NUMBER	DRAWING NUMBER	SHEET	COOR	VALVE TYPE	VALVE SIZE	ASME CLASS	ISTC CAT	ISO VALVE TYPE	TEST TYPE	TEST POS	TEST FREQ	RE REQ V-	CS JUST CSV-	RR JUST RRV-	NC ALT TEST VNC-
2-SS-TV-200A	12050-CBM-089B	1 OF 1	F6	AO GLOBE	0.375	1	A	CIV	EV	C	03				
									FS	C	03				
									LT	C	OPB				
									ST	C	03				
									VP	OC	24				
	PRESSURIZER LIQUID SPACE SAMPLE LINE, INSIDE CONTAINMENT ISOLATION VALVE														
2-SS-TV-200B	12050-CBM-089B	1 OF 1	F6	AO GLOBE	0.375	1	A	CIV	EV	C	03				
									FS	C	03				
									LT	C	OPB				
									ST	C	03				
									VP	OC	24				
	PRESSURIZER LIQUID SPACE SAMPLE LINE, OUTSIDE CONTAINMENT ISOLATION VALVE														
2-SS-TV-201A	12050-CBM-089B	1 OF 1	E6	AO GLOBE	0.375	1	A	CIV	EV	C	03				
									FS	C	03				
									LT	C	OPB				
									ST	C	03				
									VP	OC	24				
	PRESSURIZER VAPOR SPACE SAMPLE LINE, INSIDE CONTAINMENT ISOLATION VALVE														
2-SS-TV-201B	12050-CBM-089B	1 OF 1	E6	AO GLOBE	0.375	1	A	CIV	EV	C	03				
									FS	C	03				
									LT	C	OPB				
									ST	C	03				
									VP	OC	24				
	PRESSURIZER VAPOR SPACE SAMPLE LINE, OUTSIDE CONTAINMENT ISOLATION VALVE														
2-SS-TV-202A	12050-CBM-089B	1 OF 1	D6	SO GLOBE	0.375	1	A	CIV	EV	C	03				
									FS	C	03				
									LT	C	OPB				
									ST	C	03				
									VP	OC	24				
	REACTOR COOLANT COLD LEGS SAMPLE HEADER, INSIDE CONTAINMENT ISOLATION VALVE														

NORTH ANNA UNIT 2
FOURTH INSERVICE TESTING INTERVAL
VALVE INSERVICE TEST TABLE

VALVE NUMBER	DRAWING NUMBER	SHEET	COOR	VALVE TYPE	VALVE SIZE	ASME CLASS	ISTC CAT	ISO VALVE TYPE	TEST TYPE	TEST POS	TEST FREQ	RE REQ V-	CS JUST CSV-	RR JUST RRV-	NC ALT TEST VNC-
2-SS-TV-202B	12050-CBM-089B	1 OF 1	D6	SO GLOBE	0.375	1	A	CIV	EV	C	03				
									FS	C	03				
									LT	C	OPB				
									ST	C	03				
									VP	OC	24				
	REACTOR COOLANT COLD LEGS SAMPLE HEADER, OUTSIDE CONTAINMENT ISOLATION VALVE														
2-SS-TV-203A	12050-CBM-089B	1 OF 1	F6	SO GLOBE	0.375	2	AE	CIV	LT	C	OPB				
									VP	OC	24				
	RHR SAMPLE HEADER, INSIDE CONTAINMENT ISOLA- TION VALVE														
2-SS-TV-203B	12050-CBM-089B	1 OF 1	F6	SO GLOBE	0.375	2	AE	CIV	LT	C	OPB				
									VP	OC	24				
	RHR SAMPLE HEADER, OUTSIDE CONTAINMENT ISOLA- TION VALVE														
2-SS-TV-204A	12050-CBM-089B	1 OF 1	C6	AO GLOBE	0.375	2	A	CIV	EV	C	03				
									FS	C	03				
									LT	C	OPB				
									ST	C	03				
									VP	OC	24				
	PRESSURIZER RELIEF TANK GAS SPACE SAMPLE LINE, INSIDE CONTAINMENT ISOLATION VALVE														
2-SS-TV-204B	12050-CBM-089B	1 OF 1	C6	AO GLOBE	0.375	2	A	CIV	EV	C	03				
									FS	C	03				
									LT	C	OPB				
									ST	C	03				
									VP	OC	24				
	PRESSURIZER RELIEF TANK GAS SPACE SAMPLE LINE, OUTSIDE CONTAINMENT ISOLATION VALVE														
2-SS-TV-206A	12050-CBM-089B	1 OF 1	E6	SO GLOBE	0.375	1	A	CIV	EV	C	03				
									FS	C	03				
									LT	C	OPB				
									ST	C	03				
									VP	OC	24				

NORTH ANNA UNIT 2
FOURTH INSERVICE TESTING INTERVAL
VALVE INSERVICE TEST TABLE

VALVE NUMBER	DRAWING NUMBER	SHEET	COOR	VALVE TYPE	VALVE SIZE	ASME CLASS	ISTC CAT	ISO VALVE TYPE	TEST TYPE	TEST POS	TEST FREQ	RE REQ V-	CS JUST CSV-	RR JUST RRV-	NC ALT TEST VNC-
	REACTOR COOLANT HOT LEGS SAMPLE HEADER, INSIDE CONTAINMENT ISOLATION VALVE														
2-SS-TV-206B	12050-CBM-089B	1 OF 1	E6	SO GLOBE	0.375	1	A	CIV	EV	C	03				
									FS	C	03				
									LT	C	OPB				
									ST	C	03				
									VP	OC	24				
	REACTOR COOLANT HOT LEGS SAMPLE HEADER, OUTSIDE CONTAINMENT ISOLATION VALVE														
2-SS-TV-212A	12050-CBM-089A	3 OF 4	D3	AO GLOBE	0.375	2	A	CIV	EV	C	03				
									FS	C	03				
									LT	C	OPB				
									ST	C	03				
									VP	OC	24				
	STEAM GENERATORS SAMPLE HEADER, INSIDE CONTAINENT ISOLATION VALVE														
2-SS-TV-212B	12050-CBM-089A	3 OF 4	C3	AO GLOBE	0.375	2	A	CIV	EV	C	03				
									FS	C	03				
									LT	C	OPB				
									ST	C	03				
									VP	OC	24				
	STEAM GENERATORS SAMPLE HEADER, OUTSIDE CONTAINMENT ISOLATION VALVE														

NORTH ANNA UNIT 2
FOURTH INSERVICE TESTING INTERVAL
VALVE INSERVICE TEST TABLE

VALVE NUMBER	DRAWING NUMBER	SHEET	COOR	VALVE TYPE	VALVE SIZE	ASME CLASS	ISTC CAT	ISO VALVE TYPE	TEST TYPE	TEST POS	TEST FREQ	RE REQ V-	CS JUST CSV-	RR JUST RRV-	NC ALT TEST VNC-
2-SV-TV-202-1	12050-CBM-072A	2 OF 3	C3	AO GLOBE	6	2	B		EV	C	03				
									FS	C	03				
									ST	C	03				
									VP	OC	24				
	CONDENSER AIR REMOVAL DISCHARG TO CONTAINMENT, OUTSIDE CONTAIN ISOLATION VALVE														
2-SV-TV-203	12050-CBM-072A	2 OF 3	D3	AO GLOBE	6	2	A	CIV	EV	C	03				
									FS	C	03				
									LT	C	OPB				
									ST	C	03				
									VP	OC	24				
	CONDENSER AIR REMOVAL DISCHARGE TO CONTAINMENT, OUTSIDE CONTAINMENT ISOLATION VALVE														

NORTH ANNA UNIT 2
FOURTH INSERVICE TESTING INTERVAL
VALVE INSERVICE TEST TABLE

VALVE NUMBER	DRAWING NUMBER	SHEET	COOR	VALVE TYPE	VALVE SIZE	ASME CLASS	ISTC CAT	ISO VALVE TYPE	TEST TYPE	TEST POS	TEST FREQ	RE REQ V-	CS JUST CSV-	RR JUST RRV-	NC ALT TEST VNC-
1-SW-MOV-115B	11715-CBM-078A	1 OF 5	E7	MO BFLY	24	3	B		EV	O	03				
									ST	O	03				
									VP	OC	24				
	SERVICE WATER HEADER SUPPLY ISOLATION VALVE FROM AUXILIARY SERVICE WATER PUMPS														
2-SW-003	11715-CBM-078A	3 OF 5	D4	CHECK VALVE	20	3	C		CV	C	03				
										O	03				
	UNIT 2 "A" SERVICE WATER PUMP DISCHARGE CHECK VALVE														
2-SW-010	11715-CBM-078A	3 OF 4	D3	CHECK VALVE	20	3	C		CV	C	03				
										O	03				
	UNIT 2 "B" SERVICE WATER PUMP DISCHARGE CHECK VALVE														
2-SW-068	11715-CBM-078B	3 OF 4	F8	CHECK VALVE	24	3	C		CV	C	RR			16	
										O	RR			16	
	"A" SERVICE WATR HEADER SUPPLY CHECK VALVE TO RECIRC SPRAY HX UPSTREAM OF CROSS CONNECT														
2-SW-070	11715-CBM-078B	3 OF 4	F8	CHECK VALVE	24	3	C		CV	C	RR			16	
										O	RR			16	
	"B" SERVICE WATR HEADER SUPPLY CHECK VALVE TO RECIRC SPRAY HX UPSTREAM OF CROSS CONNECT														
2-SW-074	11715-CBM-078B	3 OF 4	E7	CHECK VALVE	16	2	C		CV	C	RR			16	
										O	RR			16	
	"A" RECIRC SPRAY HEAT EXCHANGER SERVICE WATER SUPPLY CHECK VALVE														
2-SW-084	11715-CBM-078B	3 OF 4	E6	CHECK VALVE	16	2	C		CV	C	RR			16	
										O	RR			16	
	"B" RECIRC SPRAY HEAT EXCHANGER SERVICE WATER SUPPLY CHECK VALVE														
2-SW-094	11715-CBM-078B	3 OF 4	E4	CHECK VALVE	16	2	C		CV	C	RR			16	
										O	RR			16	

NORTH ANNA UNIT 2
FOURTH INSERVICE TESTING INTERVAL
VALVE INSERVICE TEST TABLE

VALVE NUMBER	DRAWING NUMBER	SHEET	COOR	VALVE TYPE	VALVE SIZE	ASME CLASS	ISTC CAT	ISO VALVE TYPE	TEST TYPE	TEST POS	TEST FREQ	RE REQ V-	CS JUST CSV-	RR JUST RRV-	NC ALT TEST VNC-
	"C" RECIRC SPRAY HEAT EXCHANGER SERVICE WATER SUPPLY CHECK VALVE														
2-SW-104	11715-CBM-078B	3 OF 4	E3	CHECK VALVE	16	2	C		CV	C O	RR RR			16 16	
	"D" RECIRC SPRAY HEAT EXCHANGER SERVICE WATER SUPPLY CHECK VALVE														
2-SW-591	11715-CBM-078G	2 OF 2	E6	CHECK VALVE	2	3	C		CV	C O	03 03				
	SERVICE WATER SUPPLY TO CHARGING PUMP SEAL COOLER CHECK VALVE														
2-SW-592	11715-CBM-078G	2 OF 2	E7	CHECK VALVE	2	3	C		CV	C O	03 03				
	SERVICE WATER SUPPLY TO CHARGING PUMP SEAL COOLER CHECK VALVE														
2-SW-608	11715-CBM-078G	2 OF 2	E5	CHECK VALVE	2	3	C		CV	C O	03 03				
	SERVICE WATER SUPPLY TO CHARGING PUMP SEAL COOLER CHECK VALVE														
2-SW-609	11715-CBM-078G	2 OF 2	E5	CHECK VALVE	2	3	C		CV	C O	03 03				
	SERVICE WATER SUPPLY TO CHARGING PUMP SEAL COOLER CHECK VALVE														
2-SW-626	11715-CBM-078G	2 OF 2	E3	CHECK VALVE	2	3	C		CV	C O	03 03				
	SERVICE WATER SUPPLY TO CHARGING PUMP SEAL COOLER CHECK VALVE														
2-SW-627	11715-CBM-078G	2 OF 2	E3	CHECK VALVE	2	3	C		CV	C O	03 03				
	SERVICE WATER SUPPLY TO CHARGING PUMP SEAL COOLER CHECK VALVE														

NORTH ANNA UNIT 2
FOURTH INSERVICE TESTING INTERVAL
VALVE INSERVICE TEST TABLE

VALVE NUMBER	DRAWING NUMBER	SHEET	COOR	VALVE TYPE	VALVE SIZE	ASME CLASS	ISTC CAT	ISO VALVE TYPE	TEST TYPE	TEST POS	TEST FREQ	RE REQ V-	CS JUST CSV-	RR JUST RRV-	NC ALT TEST VNC-
2-SW-1165	11715-CBM-078C	2 OF 2	F4	CHECK VALVE	2	3	C		CV	C	03				
										O	03				
	SERVICE WATER SUPPLY CHECK VALVE														
2-SW-1166	11715-CBM-078C	2 OF 2	F3	CHECK VALVE	2	3	C		CV	C	03				
										O	03				
	SERVICE WATER SUPPLY CHECK VALVE														
2-SW-MOV-201A	11715-CBM-078A	4 OF 5	E7	MO BFLY	24	3	B		EV	O	RR			26	
									ST	O	RR			26	
									VP	OC	24				
	"A" SERVICE WATER HEADER SUPPLY ISOLATION TO RECIRC SPRAY HEAT EXCHANGERS														
2-SW-MOV-201B	11715-CBM-078A	4 OF 5	E7	MO BFLY	24	3	B		EV	O	RR			26	
									ST	O	RR			26	
									VP	OC	24				
	"A" SERVICE WATER HEADER SUPPLY ISOLATION TO RECIRC SPRAY HEAT EXCHANGERS														
2-SW-MOV-201C	11715-CBM-078A	4 OF 5	E7	MO BFLY	24	3	B		EV	O	RR			26	
									ST	O	RR			26	
									VP	OC	24				
	"B" SERVICE WATER HEADER SUPPLY ISOLATION TO RECIRC SPRAY HEAT EXCHANGERS														
2-SW-MOV-201D	11715-CBM-078A	4 OF 5	E7	MO BFLY	24	3	B		EV	O	RR			26	
									ST	O	RR			26	
									VP	OC	24				
	"B" SERVICE WATER HEADER SUPPLY ISOLATION TO RECIRC SPRAY HEAT EXCHANGERS														
2-SW-MOV-202A	11715-CBM-078B	3 OF 4	F8	MO BFLY	24	3	B		EV	C	03				
									ST	C	03				
									VP	OC	24				
	SERVICE WATER SUPPLY CROSS CONNECTS TO RECIRC SPRAY HEAT EXCHANGERS														

NORTH ANNA UNIT 2
FOURTH INSERVICE TESTING INTERVAL
VALVE INSERVICE TEST TABLE

VALVE NUMBER	DRAWING NUMBER	SHEET	COOR	VALVE TYPE	VALVE SIZE	ASME CLASS	ISTC CAT	ISO VALVE TYPE	TEST TYPE	TEST POS	TEST FREQ	RE REQ V-	CS JUST CSV-	RR JUST RRV-	NC ALT TEST VNC-
2-SW-MOV-202B	11715-CBM-078B	3 OF 4	F8	MO BFLY	24	3	B		EV	C	03				
									ST	C	03				
									VP	OC	24				
	SERVICE WATER SUPPLY CROSS CONNECTS TO RECIRC SPRAY HEAT EXCHANGERS														
2-SW-MOV-203A	11715-CBM-078B	3 OF 4	E7	MO BFLY	16	2	A	CIV	EV	C	03				
										O	03				
									LT	C	OPB				
									ST	C	03				
										O	03				
									VP	OC	24				
	SERVICE WATER SUPPLY TO "A" RECIRC SPRAY HEAT EXCHANGER, OUTSIDE CONT ISOLATION VALVE														
2-SW-MOV-203B	11715-CBM-078B	3 OF 4	E6	MO BFLY	16	2	A	CIV	EV	C	03				
										O	03				
									LT	C	OPB				
									ST	C	03				
										O	03				
									VP	OC	24				
	SERVICE WATER SUPPLY TO "B" RECIRC SPRAY HEAT EXCHANGER, OUTSIDE CONT ISOLATION VALVE														
2-SW-MOV-203C	11715-CBM-078B	3 OF 4	E4	MO BFLY	16	2	A	CIV	EV	C	03				
										O	03				
									LT	C	OPB				
									ST	C	03				
										O	03				
									VP	OC	24				
	SERVICE WATER SUPPLY TO "C" RECIRC SPRAY HEAT EXCHANGER, OUTSIDE CONT ISOLATION VALVE														
2-SW-MOV-203D	11715-CBM-078B	3 OF 4	E3	MO BFLY	16	2	A	CIV	EV	C	03				
										O	03				
									LT	C	OPB				
									ST	C	03				
										O	03				
									VP	OC	24				
	SERVICE WATER SUPPLY TO "D" RECIRC SPRAY HEAT EXCHANGER, OUTSIDE CONT ISOLATION VALVE														

NORTH ANNA UNIT 2
FOURTH INSERVICE TESTING INTERVAL
VALVE INSERVICE TEST TABLE

VALVE NUMBER	DRAWING NUMBER	SHEET	COOR	VALVE TYPE	VALVE SIZE	ASME CLASS	ISTC CAT	ISO VALVE TYPE	TEST TYPE	TEST POS	TEST FREQ	RE REQ V-	CS JUST CSV-	RR JUST RRV-	NC ALT TEST VNC-
2-SW-MOV-204A	11715-CBM-078B	3 OF 4	C7	MO BFLY	16	2	A	CIV	EV	C	03				
										O	03				
									LT	C	OPB				
									ST	C	03				
										O	03				
									VP	OC	24				
	SERVICE WATER RETURN FROM "A" RECIRC SPRAY HEAT EXCHANGER, OUTSIDE CONT ISOLATION VALVE														
2-SW-MOV-204B	11715-CBM-078B	3 OF 4	C6	MO BFLY	16	2	A	CIV	EV	C	03				
										O	03				
									LT	C	OPB				
									ST	C	03				
										O	03				
									VP	OC	24				
	SERVICE WATER RETURN FROM "B" RECIRC SPRAY HEAT EXCHANGER, OUTSIDE CONT ISOLATION VALVE														
2-SW-MOV-204C	11715-CBM-078B	3 OF 4	C5	MO BFLY	16	2	A	CIV	EV	C	03				
										O	03				
									LT	C	OPB				
									ST	C	03				
										O	03				
									VP	OC	24				
	SERVICE WATER RETURN FROM "C" RECIRC SPRAY HEAT EXCHANGER, OUTSIDE CONT ISOLATION VALVE														
2-SW-MOV-204D	11715-CBM-078B	3 OF 4	C3	MO BFLY	16	2	A	CIV	EV	C	03				
										O	03				
									LT	C	OPB				
									ST	C	03				
										O	03				
									VP	OC	24				
	SERVICE WATER RETURN FROM "D" RECIRC SPRAY HEAT EXCHANGER, OUTSIDE CONT ISOLATION VALVE														
2-SW-MOV-205A	11715-CBM-078A	4 OF 5	E7	MO BFLY	24	3	B		EV	O	RR			26	
									ST	O	RR			26	
									VP	OC	24				
	"B" SERVICE WATER HEADER RETURN ISOLATION FROM RECIRC SPRAY HEAT EXCHANGERS														

NORTH ANNA UNIT 2
FOURTH INSERVICE TESTING INTERVAL
VALVE INSERVICE TEST TABLE

VALVE NUMBER	DRAWING NUMBER	SHEET	COOR	VALVE TYPE	VALVE SIZE	ASME CLASS	ISTC CAT	ISO VALVE TYPE	TEST TYPE	TEST POS	TEST FREQ	RE REQ V-	CS JUST CSV-	RR JUST RRV-	NC ALT TEST VNC-
2-SW-MOV-205B	11715-CBM-078A	4 OF 5	E7	MO BFLY	24	3	B		EV	O	RR			26	
									ST	O	RR			26	
									VP	OC	24				
	"B" SERVICE WATER HEADER RETURN ISOLATION FROM RECIRC SPRAY HEAT EXCHANGERS														
2-SW-MOV-205C	11715-CBM-078A	4 OF 5	E6	MO BFLY	24	3	B		EV	O	RR			26	
									ST	O	RR			26	
									VP	OC	24				
	"A" SERVICE WATER HEADER RETURN ISOLATION FROM RECIRC SPRAY HEAT EXCHANGERS														
2-SW-MOV-205D	11715-CBM-078A	4 OF 5	E7	MO BFLY	24	3	B		EV	O	RR			26	
									ST	O	RR			26	
									VP	OC	24				
	"A" SERVICE WATER HEADER RETURN ISOLATION FROM RECIRC SPRAY HEAT EXCHANGERS														
2-SW-MOV-206A	11715-CBM-078B	3 OF 4	B3	MO BFLY	24	3	B		EV	C	03				
									ST	C	03				
									VP	OC	24				
	SERVICE WATER RETURN CROSS CONNECTS FROM RECIRC SPRAY HEAT EXCHANGERS														
2-SW-MOV-206B	11715-CBM-078B	3 OF 4	A3	MO BFLY	24	3	B		EV	C	03				
									ST	C	03				
									VP	OC	24				
	SERVICE WATER RETURN CROSS CONNECTS FROM RECIRC SPRAY HEAT EXCHANGERS														
2-SW-MOV-208A	11715-CBM-078C	1 OF 2	B3	MO BFLY	24	3	B		EV	C	CS		14		
										O	CS		14		
									ST	C	CS		14		
										O	CS		14		
									VP	OC	24				
	"A" SERVICE WATER HEADER SUPPLY ISOLATION TO COMPONENT COOLING HEAT EXCHANGERS														
2-SW-MOV-208B	11715-CBM-078C	1 OF 2	B3	MO BFLY	24	3	B		EV	C	CS		14		
										O	CS		14		
									ST	C	CS		14		
										O	CS		14		
									VP	OC	24				
	"B" SERVICE WATER HEADER SUPPLY ISOLATION TO COMPONENT COOLING HEAT EXCHANGERS														

NORTH ANNA UNIT 2
FOURTH INSERVICE TESTING INTERVAL
VALVE INSERVICE TEST TABLE

VALVE NUMBER	DRAWING NUMBER	SHEET	COOR	VALVE TYPE	VALVE SIZE	ASME CLASS	ISTC CAT	ISO VALVE TYPE	TEST TYPE	TEST POS	TEST FREQ	RE REQ V-	CS JUST CSV-	RR JUST RRV-	NC ALT TEST VNC-
2-SW-MOV-210A	11715-CBM-078A	4 OF 5	E8	MO BFLY	8	3	B		EV	C	03				
									ST	C	03				
									VP	OC	24				
	SERVICE WATER HEADER SUPPLY TO RECIRCULATION AIR COOLERS														
2-SW-MOV-210B	11715-CBM-078A	4 OF 5	F8	MO BFLY	8	3	B		EV	C	03				
									ST	C	03				
									VP	OC	24				
	SERVICE WATER HEADER SUPPLY TO RECIRCULATION AIR COOLERS														
2-SW-MOV-213A	11715-CBM-078A	4 OF 5	B7	MO BFLY	10	3	E		VP	OC	24				
	SERVICE WATER RETURN ISOLATION FROM FUEL PIT COOLERS														
2-SW-MOV-213B	11715-CBM-078A	4 OF 5	B5	MO BFLY	10	3	E		VP	OC	24				
	SERVICE WATER SUPPLY ISOLATION TO FUEL PIT COOLERS														
2-SW-MOV-214A	11715-CBM-078A	4 OF 5	F8	MO BFLY	8	3	B		EV	C	03				
									ST	C	03				
									VP	OC	24				
	SERVICE WATER HEADER RETURN FROM RECIRCULATION AIR COOLERS														
2-SW-MOV-214B	11715-CBM-078A	4 OF 5	F8	MO BFLY	8	3	B		EV	C	03				
									ST	C	03				
									VP	OC	24				
	SERVICE WATER HEADER RETURN FROM RECIRCULATION AIR COOLERS														
2-SW-MOV-215A	11715-CBM-078A	1 OF 5	E7	MO BFLY	24	3	B		EV	O	03				
									ST	O	03				
									VP	OC	24				
	SERVICE WATER HEADER SUPPLY ISOLATION VALVE FROM AUXILIARY SERVICE WATER PUMPS														
2-SW-MOV-217	11715-CBM-078A	1 OF 5	D6	MO BFLY	24	3	B		VP	OC	24				
	UNIT 2 AUXILIARY SERVICE WATER PUMP DISCHARGE ISOLATION VALVE														

NORTH ANNA UNIT 2
FOURTH INSERVICE TESTING INTERVAL
VALVE INSERVICE TEST TABLE

VALVE NUMBER	DRAWING NUMBER	SHEET	COOR	VALVE TYPE	VALVE SIZE	ASME CLASS	ISTC CAT	ISO VALVE TYPE	TEST TYPE	TEST POS	TEST FREQ	RE REQ V-	CS JUST CSV-	RR JUST RRV-	NC ALT TEST VNC-
2-SW-MOV-219	11715-CBM-078A	1 OF 5	D5	MO BFLY	8	3	B		EV	C	03				
									ST	C	03				
									VP	OC	24				
	MAKEUP PUMP SUPPLY VALVE														
2-SW-MOV-220A	11715-CBM-078A	5 OF 5	E5	MO BFLY	24	NC	B		EV	C	03				
									ST	C	03				
									VP	OC	24				
	AUXILIARY SERVICE WATER RETURN HEADER VALVE														
2-SW-MOV-220B	11715-CBM-078A	5 OF 5	D5	MO BFLY	24	NC	E		VP	OC	24				
	AUXILIARY SERVICE WATER RETURN HEADER VALVE														
2-SW-MOV-221A	11715-CBM-078H	1 OF 1	C8	MO BFLY	18	3	B		EV	O	03				
									ST	O	03				
									VP	OC	24				
	SERVICE WATER TO SPRAY ARRAYS STOP VALVE														
2-SW-MOV-221B	11715-CBM-078H	1 OF 1	C4	MO BFLY	18	3	B		EV	O	03				
									ST	O	03				
									VP	OC	24				
	SERVICE WATER TO SPRAY ARRAYS STOP VALVE														
2-SW-MOV-222A	11715-CBM-078H	1 OF 1	C7	MO BFLY	18	3	B		EV	O	03				
									ST	O	03				
									VP	OC	24				
	SERVICE WATER TO SPRAY ARRAYS STOP VALVE														
2-SW-MOV-222B	11715-CBM-078H	1 OF 1	C4	MO BFLY	18	3	B		EV	O	03				
									ST	O	03				
									VP	OC	24				
	SERVICE WATER TO SPRAY ARRAYS STOP VALVE														
2-SW-MOV-223A	11715-CBM-078H	1 OF 1	D8	MO BFLY	24	3	B		EV	C	03				
									ST	C	03				
									VP	OC	24				
	SERVICE WATER BYPASS VALVE														

NORTH ANNA UNIT 2
FOURTH INSERVICE TESTING INTERVAL
VALVE INSERVICE TEST TABLE

VALVE NUMBER	DRAWING NUMBER	SHEET	COOR	VALVE TYPE	VALVE SIZE	ASME CLASS	ISTC CAT	ISO VALVE TYPE	TEST TYPE	TEST POS	TEST FREQ	RE REQ V-	CS JUST CSV-	RR JUST RRV-	NC ALT TEST VNC-
2-SW-MOV-223B	11715-CBM-078H	1 OF 1	D4	MO BFLY	24	3	B		EV	C	03				
									ST	C	03				
									VP	OC	24				
	SERVICE WATER BYPASS VALVE														
2-SW-RV-200A	11715-CBM-078B	3 OF 4	E7	RELIEF VALVE	0.75	2	C		SP	O	120	3, NOTE 1			
	"A" RECIRC SPRAY HEAT EXCHANG SERVICE WATER RELIEF VALVE, RV DISCHARGE TO CONT SUMP														
2-SW-RV-200B	11715-CBM-078B	3 OF 4	E6	RELIEF VALVE	0.75	2	C		SP	O	120	3, NOTE 1			
	"B" RECIRC SPRAY HEAT EXCHANG SERVICE WATER RELIEF VALVE, RV DISCHARGE TO CONT SUMP														
2-SW-RV-200C	11715-CBM-078B	3 OF 4	E4	RELIEF VALVE	0.75	2	C		SP	O	120	3, NOTE 1			
	"C" RECIRC SPRAY HEAT EXCHANG SERVICE WATER RELIEF VALVE, RV DISCHARGE TO CONT SUMP														
2-SW-RV-200D	11715-CBM-078B	3 OF 4	E3	RELIEF VALVE	0.75	2	C		SP	O	120	3, NOTE 1			
	"D" RECIRC SPRAY HEAT EXCHANG SERVICE WATER RELIEF VALVE, RV DISCHARGE TO CONT SUMP														
2-SW-RV-201A	11715-CBM-078C	1 OF 2	E7	RELIEF VALVE	0.75	3	C		SP	O	120	3, NOTE 1			
	UNIT 2 "A" COMPONENT COOLING HEAT EXCHANGER SERVICE WATER RELIEF VALVE														
2-SW-RV-201B	11715-CBM-078C	1 OF 2	E8	RELIEF VALVE	0.75	3	C		SP	O	120	3, NOTE 1			
	UNIT 2 "B" COMPONENT COOLING HEAT EXCHANGER SERVICE WATER RELIEF VALVE														
2-SW-TCV-202A	11715-CBM-078G	2 OF 2	C4	AO GLOBE	2	3	B		EV	O	03				
									FS	O	03				
									ST	O	NA	2			
	SERVICE WATER FROM CHARGING PUMP LUBE OIL COOLER TEMP CONTROL VALVE														
2-SW-TCV-202B	11715-CBM-078G	2 OF 2	C6	AO GLOBE	2	3	B		EV	O	03				
									FS	O	03				
									ST	O	NA	2			
	SERVICE WATER FROM CHARGING PUMP LUBE OIL COOLER TEMP CONTROL VALVE														

NORTH ANNA UNIT 2
FOURTH INSERVICE TESTING INTERVAL
VALVE INSERVICE TEST TABLE

VALVE NUMBER	DRAWING NUMBER	SHEET	COOR	VALVE TYPE	VALVE SIZE	ASME CLASS	ISTC CAT	ISO VALVE TYPE	TEST TYPE	TEST POS	TEST FREQ	RE REQ V-	CS JUST CSV-	RR JUST RRV-	NC ALT TEST VNC-
2-SW-TCV-202C	11715-CBM-078G	2 OF 2	C8	AO GLOBE	2	3	B		EV	O	03				
									FS	O	03				
									ST	O	NA	2			
	SERVICE WATER FROM CHARGING PUMP LUBE OIL COOLER TEMP CONTROL VALVE														

NORTH ANNA UNIT 2
FOURTH INSERVICE TESTING INTERVAL
VALVE INSERVICE TEST TABLE

VALVE NUMBER	DRAWING NUMBER	SHEET	COOR	VALVE TYPE	VALVE SIZE	ASME CLASS	ISTC CAT	ISO VALVE TYPE	TEST TYPE	TEST POS	TEST FREQ	RE REQ V-	CS JUST CSV-	RR JUST RRV-	NC ALT TEST VNC-
2-VG-TV-200A	12050-CBM-090A	1 OF 3	F3	AO GLOBE	1.5	2	A	CIV	EV	C	03				
									FS	C	03				
									LT	C	OPB				
									ST	C	03				
									VP	OC	24				
	VENT LINE ISOL FROM PRIMARY DRAINS TRANSFER TANK TO GAS STRIPPERS, OUTSIDE CONT ISOL														
2-VG-TV-200B	12050-CBM-090A	1 OF 3	D3	AO GLOBE	1.5	2	A	CIV	EV	C	03				
									FS	C	03				
									LT	C	OPB				
									ST	C	03				
									VP	OC	24				
	VENT LINE ISOL FROM PRIMARY DRAINS TRANSFER TANK TO GAS STRIPPERS, INSIDE CONT ISOL VLV														

NORTH ANNA UNIT 2
FOURTH INSERVICE TESTING INTERVAL
VALVE INSERVICE TEST TABLE

VALVE NUMBER	DRAWING NUMBER	SHEET	COOR	VALVE TYPE	VALVE SIZE	ASME CLASS	ISTC CAT	ISO VALVE TYPE	TEST TYPE	TEST POS	TEST FREQ	RE REQ V-	CS JUST CSV-	RR JUST RRV-	NC ALT TEST VNC-
2-VP-024	12050-CBM-072A	2 OF 3	E3	CHECK VALVE	6	2	AC	CIV	CV	C	RR			17	
										O	RR			17	
									LT	C	OPB				
	CONDENSER AIR REMOVAL DISCHARG TO CONTAINMENT INSIDE CONTAINMENT ISOLATION CHECK VALVE														

NORTH ANNA UNIT 2
FOURTH INSERVICE TESTING INTERVAL
VALVE INSERVICE TEST TABLE

VALVE NUMBER	DRAWING NUMBER	SHEET	COOR	VALVE TYPE	VALVE SIZE	ASME CLASS	ISTC CAT	ISO VALVE TYPE	TEST TYPE	TEST POS	TEST FREQ	RE REQ V-	CS JUST CSV-	RR JUST RRV-	NC ALT TEST VNC-
2-WT-041	12050-CBM-102A	2 OF 2	F7	CHECK VALVE	0.75	2	C		CV	C O	03 03	 TP-01			
	"A" STEAM GENERATOR CHEMICAL FEED SUPPLY CHECK VALVE														
2-WT-053	12050-CBM-102A	2 OF 2	E7	CHECK VALVE	0.75	2	C		CV	C O	03 03	 TP-01			
	"B" STEAM GENERATOR CHEMICAL FEED SUPPLY CHECK VALVE														
2-WT-069	12050-CBM-102A	2 OF 2	D7	CHECK VALVE	0.75	2	C		CV	C O	03 03	 TP-01			
	"C" STEAM GENERATOR CHEMICAL FEED SUPPLY CHECK VALVE														
2-WT-437	12050-CBM-102B	1 OF 1	E6	MANUAL GATE	2	2	AE	CIV	LT	C	OPB				
	WET LAY UP RETURN FROM "A" STEAM GENERATOR, INSIDE CONTAINMENT ISOLATION VALVE														
2-WT-438	12050-CBM-102B	1 OF 1	D6	MANUAL GATE	2	2	AE	CIV	LT	C	OPB				
	WET LAY UP RETURN FROM "B" STEAM GENERATOR, INSIDE CONTAINMENT ISOLATION VALVE														
2-WT-439	12050-CBM-102B	1 OF 1	B6	MANUAL GATE	2	2	AE	CIV	LT	C	OPB				
	WET LAY UP RETURN FROM "C" STEAM GENERATOR, INSIDE CONTAINMENT ISOLATION VALVE														
2-WT-446	12050-CBM-102B	1 OF 1	E5	MANUAL GATE	2	2	AE	CIV	LT	C	OPB				
	WET LAY UP RETURN FROM "A" STEAM GENERATOR, OUTSIDE CONTAINMENT ISOLATION VALVE														
2-WT-447	12050-CBM-102B	1 OF 1	D5	MANUAL GATE	2	2	AE	CIV	LT	C	OPB				
	WET LAY UP RETURN FROM "B" STEAM GENERATOR, OUTSIDE CONTAINMENT ISOLATION VALVE														
2-WT-448	12050-CBM-102B	1 OF 1	B5	MANUAL GATE	2	2	AE	CIV	LT	C	OPB				
	WET LAY UP RETURN FROM "C" STEAM GENERATOR, OUTSIDE CONTAINMENT ISOLATION VALVE														

NOTE 1

The Class 2, 3 and NC relief valves listed in Table 1 serve a thermal relief application and will be tested in accordance with Appendix I, I-1390.

NOTE 1 (Cont.)

Table 1

Thermal Relief Valve Number	ASME Code Class	Function
2-CC-RV-204A 2-CC-RV-204B 2-CC-RV-204C	NC	These relief valves protect the CC piping and components related to the recirculation air cooler from over-pressure in the event of an accident requiring isolation of this line (non-safety function). Credit is taken for these relief valves protecting penetration 9.
2-CC-RV-224A 2-CC-RV-224B 2-CC-RV-224C	3	These relief valves protect the CC piping and components related to the reactor shroud cooling coils from over-pressure due to heating in the event of an accident requiring isolation of this line. Since there is no remote operating isolation valve between these valves and the containment isolation valves, they also would offer protection for containment penetrations 16, 17 and 18 in the event that an inboard containment isolation valve failed to close.
2-CC-RV-225A 2-CC-RV-225B 2-CC-RV-225C	3	These relief valves protect the CC piping that supplies cooling water to the RCP thermal barrier heat exchangers from over-pressure in the event of an inadvertent actuation of the downstream trip valve. Thermal loads could cause the pressure in the isolated CC piping to increase past the design limit of the pressure boundary.
2-CC-RV-226	3	This relief valve protects the excess letdown heat exchanger (shell side) from over-pressure as a result of thermal expansion when the heat exchanger is isolated. The valve also provides protection for penetration 1.
2-CC-RV-228A 2-CC-RV-228B	3	These relief valves open to protect the RHR heat exchangers and related piping and containment penetrations from over-pressurization while the heat exchangers are isolated within the containment structure. During an accident, the temperature increase in containment could cause the water in a normally isolated heat exchanger to expand resulting in a significant increase in pressure with a potential for damage. These relief valves also provide protection for penetrations 2, 4 and 5.
2-CC-RV-231A 2-CC-RV-231B	3	These relief valves protect the RHR Seal Coolers from over-pressure as a result of thermal expansion when a cooler is isolated.

NOTE 1 (Cont.)

Table 1

Thermal Relief Valve Number	ASME Code Class	Function
2-HV-RV-2200 2-HV-RV-2201	3	These valves provide over-pressure protection to the control and relay room A/C chilled water pump suction headers.
2-HV-RV-2202A 2-HV-RV-2202B 2-HV-RV-2202C	3	These valves provide over-pressure protection (thermal) to the chillers when one of the chillers is isolated.
2-HV-RV-2205A 2-HV-RV-2205B 2-HV-RV-2205C	3	These valves provide over-pressure protection (thermal) to the condensers in the event one is isolated.
2-SI-RV-2857B	2	This valve protects the HHSI injection line downstream of the BIT from over-pressure. This is primarily a thermal relief function to protect from pressure developed by the heat tracing in the isolated portion of the piping and BIT.
2-SW-RV-200A 2-SW-RV-200B 2-SW-RV-200C 2-SW-RV-200D	2	These valves open to provide over-pressure protection for an isolated heat exchanger and the associated containment penetration. During normal plant operation the recirculation spray headers and heat exchangers are drained, thus there is no mechanism where an over-pressure condition can occur. During an accident all heat exchangers are in operation and system pressure cannot exceed service water system pressure. If during the course of an accident isolation of a heat exchanger is required, the relief valves provide thermal relief protection to the heat exchanger and the penetration piping.
2-SW-RV-201A 2-SW-RV-201B	3	These valves open to provide over-pressure protection for an isolated component cooling heat exchanger if the heat exchanger is manually isolated for maintenance and subjected to thermal loads.

4.5 VALVE TEST PROGRAM RELIEF REQUESTS

Relief requests identify those ISTC Code requirements considered to be impractical or for which an alternative testing method is proposed. The basis for the relief request and the alternate testing to be performed is given.

RELIEF REQUEST V-1

Proposed alternative in accordance with 10CFR50.55a(a)(3)(i)
Alternative provides acceptable level of quality and safety.

1.0 ASME Code Components Affected

Valve(s): 2-CH-MOV-2115B, 2-CH-MOV-2115D, 2-SI-18, 2-SI-MOV-2885A, 2-SI-MOV-2885B, 2-SI-MOV-2885C, 2-SI-MOV-2885D

System: Chemical and Volume Control and Safety Injection

Category: A for 2-CH-MOV-2115B and D, and 2-SI-MOV-2885A-D
AC for 2-SI-18

Class: 2

Function: RWST Isolation Valves

2.0 Applicable Code Edition and Addenda

ASME OM Code, 2004 Edition

3.0 Applicable Code Requirements

ISTC-3630(f) - Valves or valve combinations with leakage rates exceeding the values specified by the Owner in ISTC-3630(e) above shall be declared inoperable and be either repaired or replaced.

4.0 Reason for Request

Valves 2-CH-MOV-2115B and D, and 2-SI-18 are in the supply line to the charging pumps from the RWST. Valves 2-SI-MOV-2885A and C are in series, and 2-SI-MOV-2885B and D are in series, and are on test lines that run from the discharge of the low head SI pumps to the RWST. During recirculation mode transfer, the RWST is isolated and the low head SI pumps recirculate highly contaminated water from the containment sump to the reactor vessel.

The RWST isolation valves work as a system of valves to protect the RWST from the contaminated sump water. Permissible valve leakage rates are based on each valve's possible contribution to the total allowable leakage rate to the RWST. When the leakage rate from each valve has been measured and summed with the leakage rates of the other RWST isolation valves, an individual valve's permissible leakage rate may have been exceeded but the overall allowable leakage to the RWST may not have been exceeded. In these cases, a repair or replacement may not be necessary because the system of isolation valves has been verified to be performing acceptably.

In addition to repair or replacement as corrective actions, an evaluation can be performed which demonstrates that even if a valve has exceeded its permissible leakage rate, the overall leakage rate to the RWST will be maintained below the overall allowable RWST leakage rate and hence the system function is satisfied.

This evaluation should provide a high level of assurance that delaying the repair or replacement will not result in exceeding the overall limit before the next leak rate test. The evaluation should include a determination of the cause for the individual valve leakage. The evaluation should also address the effect of the degradation mechanism for the valve on the ability of the valve group to maintain overall leakage to the RWST below the overall allowable leakage rate during the subsequent 24 month interval. Evaluations will be documented and retained in plant records, and are available for subsequent review. This alternative to the requirements of ISTC-3630(f) provides an acceptable level of quality and safety.

5.0 Proposed Alternatives and Bases for Use

In addition to repair or replacement as corrective actions, an evaluation can be performed which demonstrates that even if a valve has exceeded its permissible leakage rate, the overall leakage rate to the RWST will be maintained below the overall allowable RWST leakage rate. No repair or replacement is necessary if the evaluation is performed and system leakage is projected to be maintained below the overall permissible leakage rate throughout the subsequent 24 month interval.

Using the provisions of this relief request as an alternative to the specific requirements of ISTC-3630(f) identified above will provide adequate indication of valve performance and continue to provide an acceptable level of quality and safety. Therefore, pursuant to 10 CFR 50.55a(a)(3)(i), Relief Request V-1 requests relief from the specific ISTC Code requirements identified in this relief request.

6.0 Duration of the Proposed Alternative

The proposed alternatives described in Relief Request V-1 will be used for the North Anna Power Station Unit 2 Fourth Ten Year Inservice Testing Interval.

7.0 Precedents

A similar relief request for the North Anna Unit 2 Third Ten Year Inservice Testing Interval was approved by the NRC in their safety evaluation entitled "North Anna Power Station, Units Nos.1 and 2 Re: Inservice testing Program for Pumps and Valves, Third Ten Year Interval Update (TAC Nos. MB2221 and MB2222)" dated January 28, 2002.

8.0 References

1. ASME OM Code, 2004 Edition

RELIEF REQUEST V-2

Proposed alternative in accordance with 10CFR50.55a(a)(3)(i)
Alternative provides acceptable level of quality and safety.

1.0 ASME Code Components Affected

Refer to Table V-2

2.0 Applicable Code Edition and Addenda

ASME OM Code, 2004 Edition

3.0 Applicable Code Requirements

ISTA-3130(b) states: "Code Cases shall be applicable to the edition and addenda specified in the test plan." The edition and addenda specified in the test plan for the fourth Ten-Year interval for the North Anna Nuclear Power Plant is the ASME OM code 2004 Edition."

4.0 Reason for Request

Code Case OMN-8 "Alternative Rules for Preservice and Inservice Testing of Power-Operated Valves That Are Used for System Control and Have a Safety Function per OM-10," contains no applicability statement. In the latest edition/addenda incorporated by reference in 10 CFR 50.55a(b)(3) (i.e., the 2001 Edition with Addenda through the OMb-2003), the expiration date given for OMN-8 is November 20, 2006. OMN-8 is included in the 2006 Addenda to the 2004 Edition of the OM Code with a new expiration date of November 20, 2009; however, neither the 2004 Edition of the OM Code nor any subsequent Addenda have been incorporated by reference in 10 CFR 50.55a(b)(3). Paragraph 10 CFR 50.55a(b)(6) references RG 1.192, which approves the use of Code Case OMN-8. Code Case OMN-8 provides an alternative to stroke time testing power operated control valves that have only a fail safe safety function. The pneumatically power-operated control valves listed in Table V-2 have only a fail safe safety function.

5.0 Proposed Alternatives and Bases for Use

The requirements of OMN-8 will be applied to the valves listed in Table V-2 in lieu of the provisions for power-operated control valve testing specified in paragraphs ISTC-5131, ISTC-5132 and ISTC-5133(b) in Subsection ISTC of the 2004 Edition of the ASME OM Code.

Note that paragraphs ISTC 4.2.4, ISTC 4.2.8, ISTC 4.2.9(b) and ISTC 1.2(b) identified in OMN-8 are from the 1995 Edition of Subsection ISTC and correspond to paragraphs ISTC-5131, ISTC-5132, ISTC-5133(b), and ISTC-1200(b) from the 2004 Edition for pneumatically power-operated valves, respectively.

Using the provisions of this relief request as an alternative to the specific requirements of ISTC-3630(f) identified above will provide adequate indication of valve performance and continue to provide an acceptable level of quality and safety. Therefore, pursuant to 10 CFR 50.55a(a)(3)(i), Relief Request V-2 requests relief from the specific ISTC Code requirements identified in this relief request.

6.0 Duration of the Proposed Alternative

The proposed alternatives described in Relief Request V-2 will be used for the North Anna Power Station Unit 2 Fourth Ten Year Inservice Testing Interval.

7.0 Precedents

The following relief request for another plant that is similar to Relief Request V-2 was approved by the NRC.

Relief Request GV-RR-003 was submitted by Calvert Cliffs and approved by the NRC by letter dated 6/18/2008 (TAC NOS. MD5998 to MD6011).

8.0 References

1. ASME OM Code, 2004 Edition

Table V-2

Valve Number	System	OM Category	ASME Class	Function
2-CH-FCV-2113A	Chemical and Volume Control	B	3	Alternate Emergency Boration Line Flow Control Valve
2-CH-FCV-2114A	Chemical and Volume Control	B	NC	Primary Grade Water Flow Control Valve
2-FW-HCV-200A 2-FW-HCV-200B 2-FW-HCV-200C	Auxiliary Feedwater	B	3	Standby Auxiliary Feedwater Supply Hand Control Valves
2-FW-PCV-259A 2-FW-PCV-259B	Auxiliary Feedwater	B	3	Auxiliary Feedwater Pressure Control Valves
2-HV-PCV-2235A1 2-HV-PCV-2235B1 2-HV-PCV-2235C1	Control Room Air Conditioning	B	3	Control Room Condenser Water Bypass Line Pressure Control Valves
2-HV-PCV-2235A2 2-HV-PCV-2235B2 2-HV-PCV-2235C2	Control Room Air Conditioning	B	3	Control Room Condenser Water Line Pressure Control Valves
2-MS-PCV-201A 2-MS-PCV-201B 2-MS-PCV-201C	Main Steam	B	2	Main Steam Header Discharge to Atmosphere Pressure Control Valves
2-SI-HCV-2936	Safety Injection	A	2	Waste Gas from Accumulators to Charcoal Filter Line Hand Control Valve
2-SW-TCV-202A 2-SW-TCV-202B 2-SW-TCV-202C	Service Water	B	3	Service Water from Charging Pump Lube Oil Cooler Temperature Control Valves

RELIEF REQUEST V-3

Proposed alternative in accordance with 10CFR50.55a(a)(3)(i)
Alternative provides acceptable level of quality and safety.

1.0 ASME Code Components Affected

All Class 2 and 3 safety and relief valves, excluding the MSSVs, as listed in Table V-3.

2.0 Applicable Code Edition and Addenda

ASME OM Code, 2004 Edition

3.0 Applicable Code Requirements

ISTC Appendix I, I-8120, "Compressible Fluid Services Other Than Steam", I-8120(h) requires that a minimum of 5 minutes shall elapse between successive openings.

ISTC Appendix I, I-8120, "Liquid Service", I-8130(g) requires that a minimum of 5 minutes shall elapse between successive openings.

4.0 Reason for Request

The ASME OM Code requires a minimum of two consecutive valve actuations to establish the lift setpoint of safety and relief valves and that a minimum of 5 minutes elapse between successive tests. For the valves listed in Table V-3, the requirement for verifying temperature stability by waiting 5 minutes between successive lift setpoint tests is inappropriate and adds no value. Lift setpoint testing is conducted using water or nitrogen as the test medium, and the tests are performed when the valve and the test medium are at the same temperature. There is a negligible effect on lift setpoint due to minor temperature deviations that might occur during testing.

Eliminating the 5-minute wait time will minimize system outage times and radiation exposure. Class 2 and 3 safety and relief valves associated with contaminated systems are bench tested in the hot shop, located within the RCA in the Auxiliary Building, to prevent contamination.

Entry into the testing facility often requires full Anti-C's. During the test, personnel are exposed to low background radiation levels present in the Auxiliary Building hot shop as well as the radiation levels associated with the specific valve being tested. The proposed elimination of the hold time between successive tests for Class 2 and 3 safety/relief valves tested under ambient conditions using a test medium at ambient conditions reduces the duration of each test. Most importantly, reducing the hold times reduces the length of time that the test personnel must spend in close proximity to the valve. As a result, personnel radiation exposure is reduced.

For all safety and relief valves, including those located in "clean areas" that are bench-tested in the Mechanical Maintenance Shop, the proposed elimination of the hold time between successive tests will reduce the duration of each test. Since there are numerous safety/relief valve tests for both units and most require at least two people, the proposed elimination of the hold time between successive tests is expected to also result in a significant cumulative reduction in limited manpower resources.

5.0 Proposed Alternatives and Bases for Use

For Class 2 and 3 safety and relief valves, excluding the MSSVs, tested under ambient conditions using test medium at ambient conditions, the 5-minute hold requirement between successive openings will be deleted.

In accordance with 1-8120(a), and 1-8130(a), the test medium used will be the same as the normal system operating fluid and temperature for which the valves in Table V-3 were designed. For liquid service this will be water. For compressible fluid services other than steam, this will be nitrogen. In both cases, the test stand and surrounding environment ambient temperature conditions are relatively fixed with negligible changes occurring over the set pressure and seat tightness test determinations. There is a negligible effect on valve setpoint due to minor temperature deviations that might occur at these conditions.

Using the provisions of this relief request as an alternative to the specific requirements of I-8120(h) and I-8130(g) identified above will provide adequate indication of valve performance and continue to provide an acceptable level of quality and safety. Therefore, pursuant to 10 CFR 50.55a(a)(3)(i), Relief Request V-3 requests relief from the specific ISTC Code requirements identified in this relief request.

6.0 Duration of the Proposed Alternative

The proposed alternatives described in Relief Request V-3 will be used for the North Anna Power Station Unit 2 Fourth Ten Year Inservice Testing Interval.

7.0 Precedents

The following relief request for another plant that is similar to Relief Request V-3 was approved by the NRC

Relief Request GV-RR-001 was submitted by Calvert Cliffs and approved by the NRC by letter dated 6/18/2008 (TAC NOS. MD5998 to MD6011).

8.0 References

1. ASME OM Code, 2004 Edition

Table V-3

Valve Number	System	ASME Class	Test Medium	Component Protected
2-CC-RV-224A	Component Cooling	3	Water	Containment penetration
2-CC-RV-224B	Component Cooling	3	Water	Containment penetration
2-CC-RV-224C	Component Cooling	3	Water	Containment penetration
2-CC-RV-225A	Component Cooling	3	Water	RCP thermal barrier
2-CC-RV-225B	Component Cooling	3	Water	RCP thermal barrier
2-CC-RV-225C	Component Cooling	3	Water	RCP thermal barrier
2-CC-RV-226	Component Cooling	3	Water	Containment penetration
2-CC-RV-228A	Component Cooling	3	Water	RHR heat exchanger
2-CC-RV-228B	Component Cooling	3	Water	RHR heat exchanger
2-CC-RV-231A	Component Cooling	3	Water	RHR pump seal cooler
2-CC-RV-231B	Component Cooling	3	Water	RHR pump seal cooler
2-CH-RV-2203	Chemical and Volume Control	2	Water	Containment penetration
2-CH-RV-2382A	Chemical and Volume Control	2	Water	Containment penetration
2-CH-RV-2382B	Chemical and Volume Control	2	Water	Containment penetration
2-FW-RV-200	Auxiliary Feedwater	3	Water	Pump P-2 discharge header
2-HV-RV-2200	Control Room Chilled Water	3	Water	Pump suction headers
2-HV-RV-2201	Control Room Chilled Water	3	Water	Pump suction headers
2-HV-RV-2202A	Control Room Chilled Water	3	Water	Chiller
2-HV-RV-2202B	Control Room Chilled Water	3	Water	Chiller
2-HV-RV-2202C	Control Room Chilled Water	3	Water	Chiller
2-HV-RV-2205A	Control Room Condenser Water	3	Water	Condenser
2-HV-RV-2205B	Control Room Condenser Water	3	Water	Condenser
2-HV-RV-2205C	Control Room Condenser Water	3	Water	Condenser
2-RH-RV-2721A	Residual Heat Removal	2	Water	Pump suction line
2-RH-RV-2721B	Residual Heat Removal	2	Water	Pump suction line

RELIEF REQUEST V-3 (Cont.)

Table V-3

Valve Number	System	ASME Class	Test Medium	Component Protected
2-SI-RV-2845A	Safety Injection	2	Water	LHSI pump discharge line
2-SI-RV-2845B	Safety Injection	2	Water	LHSI header RCS to cold leg
2-SI-RV-2845C	Safety Injection	2	Water	LHSI pump discharge line
2-SI-RV-2857B	Safety Injection	2	Water	Boron injection tank
2-SI-RV-2858A	Safety Injection	2	Nitrogen	Accumulator
2-SI-RV-2858B	Safety Injection	2	Nitrogen	Accumulator
2-SI-RV-2858C	Safety Injection	2	Nitrogen	Accumulator
2-SW-RV-200A	Service Water	2	Water	Recirculation spray heat exchanger
2-SW-RV-200B	Service Water	2	Water	Recirculation spray heat exchanger
2-SW-RV-200C	Service Water	2	Water	Recirculation spray heat exchanger
2-SW-RV-200D	Service Water	2	Water	Recirculation spray heat exchanger
2-SW-RV-201A	Service Water	3	Water	CC heat exchanger
2-SW-RV-201B	Service Water	3	Water	CC heat exchanger

4.6 VALVE TEST PROGRAM COLD SHUTDOWN JUSTIFICATIONS

ISTC-3521 and ISTC-3522 allow for the full stroke exercising of valves during Cold Shutdown (but not more frequently than every three months) if it is not practical to exercise the valves during normal operation. Therefore, no request for relief from testing every three months is necessary.

However, ISTC-9200 requires that these valves be specifically identified by the owner. The cold shutdown justifications identify and provide the technical basis for valves exercised during cold shutdown but not during normal operation.

COLD SHUTDOWN JUSTIFICATION CSV-1

System : Component Cooling

Valve(s): 2-CC-TV-201A 2-CC-TV-202E
2-CC-TV-201B 2-CC-TV-202F
2-CC-TV-202A 2-CC-TV-204A
2-CC-TV-202B 2-CC-TV-204B
2-CC-TV-202C 2-CC-TV-204C
2-CC-TV-202D

Category: A

Class : 2

Function: Reactor Coolant Pump CC Supply and Return Containment Isolation Valves

Cold Shutdown Justification

Testing these trip valves to the closed position interrupts component cooling (CC) flow to the Reactor Coolant Pumps (RCPs) thermal barriers, lube oil, stator and/or shroud coolers. The motor for each RCP is vulnerable to loss of CC flow. If a CC trip valve fails closed during testing and CC flow is lost, damage to the operating RCP will result in approximately 10 minutes. In this case, the RCP will be tripped before damage occurs. The increased level of safety gained from exercising these valves while the RCPs are operating during normal operation or cold shutdowns does not justify the operational consequences should they fail in the closed position. The valve controllers do not allow for a part-stroke exercise test.

Testing Frequency

These valves will be full stroke exercised every cold shutdown when the RCPs are secured but not more frequently than once every three months.

COLD SHUTDOWN JUSTIFICATION CSV-2

System : Chemical & Volume Control System

Valve(s): 2-CH-MOV-2350

Category: B

Class : 3

Function: Emergency Boration Line Valve

Cold Shutdown Justification

Full or part-stroke exercising this valve during power operation would cause a sudden increase in reactor coolant system boron inventory by providing flow from the emergency boration path to charging pump suctions. Also, the valve controller for 2-CH-MOV-2350 does not allow for a part-stroke exercise test. The increased level of safety gained from exercising this valve during power operation does not justify the operational consequences associated with reactivity transients.

Testing Frequency

Valve 2-CH-MOV-2350 will be full stroke exercised every cold shutdown but not more frequently than once every three months.

COLD SHUTDOWN JUSTIFICATION CSV-3

System : Chemical & Volume Control System

Valve(s): 2-CH-TV-2204A 2-CH-LCV-2460A
2-CH-TV-2204B 2-CH-LCV-2460B

Category: B for 2-CH-LCV-2460A and B
A for 2-CH-TV-2204A and B

Class : 1 for 2-CH-LCV-2460A and B
2 for 2-CH-TV-2204A and B

Function: Letdown Line Isolation Valves

Cold Shutdown Justification

Exercising these valves during power operation interrupts letdown flow from the reactor coolant system (RCS) to the volume control tank. If the valves should fail closed, reactor coolant inventory control would be lost.

The pressurizer level control program controls reactor coolant inventory by regulating the operation of the charging flow control valve so that the charging input flow to the RCS and reactor coolant pump seal injection flow into the RCS matches letdown flow.

Also, exercising these valves during normal operation will interrupt letdown flow through the regenerative heat exchanger. This flow interruption would allow a slug of relatively cool charging water to thermal shock the nozzle connecting the 3" charging line to the 27" loop 2 cold leg injection line. The valve controllers do not allow for a part stroke exercise test.

Testing Frequency

These valves will be full stroke exercised every cold shutdown but not more frequently than once every three months.

COLD SHUTDOWN JUSTIFICATION CSV-4

System : Chemical & Volume Control System

Valve(s): 2-CH-MOV-2115B
2-CH-MOV-2115C
2-CH-MOV-2115D
2-CH-MOV-2115E

Category: A for 2-CH-MOV-2115B and D
B for 2-CH-MOV-2115C and E

Class : 2

Function: Charging Pump Supply from the VCT and RWST Isolation Valves

Cold Shutdown Justification

Full or part-stroke exercising these valves during power operation would require that charging pump suction be aligned with the Refueling Water Storage Tank. That alignment would cause a sudden increase in reactor coolant system boron inventory. The increased level of safety gained from full or part-stroke exercising these valves during power operation does not justify the operational consequences of reactivity transients.

Testing Frequency

These valves will be full stroke exercised every cold shutdown but not more frequently than once every three months.

COLD SHUTDOWN JUSTIFICATION CSV-5

System : Chemical & Volume Control System

Valve(s): 2-CH-MOV-2289A
2-CH-MOV-2289B

Category: B

Class : 1 for 2-CH-MOV-2289A
2 for 2-CH-MOV-2289B

Function: Main Charging Header Isolation Valves

Cold Shutdown Justification

Varying letdown flow through the Regenerative Heat Exchanger will cause variations in charging flow temperatures. This is not desirable since decreased charging temperatures result in reactivity increases and thermal stress on the piping and heat exchanger.

Full or part-stroke exercising these valves during power operation would isolate the normal charging flow path from the charging pumps to the Reactor Coolant System. Also, the valve controllers do not allow for a part-stroke exercise test. The small increase in safety gained by exercising these valves every three months does not justify the operational consequences of providing an alternate charging flow path during power operation.

Testing Frequency

These valves will be full stroke exercised every cold shutdown but not more frequently than once every three months.

COLD SHUTDOWN JUSTIFICATION CSV-6

System : Feedwater

Valve(s): 2-FW-FCV-2478
2-FW-FCV-2479
2-FW-FCV-2488
2-FW-FCV-2489
2-FW-FCV-2498
2-FW-FCV-2499
2-FW-MOV-254A
2-FW-MOV-254B
2-FW-MOV-254C

Category: B

Class : NC

Function: Main Feedwater Regulating, Bypass and Isolation Valves

Cold Shutdown Justification

These valves are in positions required to sustain power operation. Full stroke exercising the valves would result in a reactor trip. The main feedwater regulating valves 2-FW-FCV-2478, 2488 and 2498 move during normal operation as they perform their regulating function. In order to perform a partial stroke test during normal operation, the plant would have to reduce power to cause the valve disks to move. Reducing power for the purpose of performing an exercise test is considered impractical according to the NRC response to Comment 2.4.5-1 in NUREG-1482, Revision 0, Appendix G. Appendix G was omitted from NUREG-1482, Revision 1, along with Comment 2.4.5-1. However, IST Engineering still considers reducing power for the purpose of performing an exercise test as being impractical.

The bypass valves 2-FW-FCV-2479, 2489 and 2499 are used normally during plant startup. During this startup period, their safety function is to close. During normal operation, these valves typically remain closed and, thus are passive in the closed position. Therefore, the bypass valves do not need to be partial stroke tested every three months. The valve controllers for the motor operated valves 2-FW-MOV-254A, B and C do not allow for a part stroke exercise test.

Testing Frequency

These valves will be full stroke exercised every cold shutdown but not more frequently than once every three months.

COLD SHUTDOWN JUSTIFICATION CSV-7

System : Main Steam

Valve(s): 2-MS-NRV-201A
2-MS-NRV-201B
2-MS-NRV-201C

Category: C

Class : 2

Function: Main Steam Header Non-return Valves

Cold Shutdown Justification

Valve Description

The main steam non-return valves (NRVs) at North Anna Power Station are located in the main steam valve house and are a globe type stop check design. The valves measure approximately 16 feet from the bottom of the valve body to the top of the hand wheel and weigh almost 24,000 lbs. The disk is welded to a hollow piston and the whole assembly is free to move about 25 vertical inches within the valve body cylinder. The disk measures 25.5 inches across and the disk and piston assembly weighs approximately 1,200 lbs. When the main steam system is not inservice, a motor operator is used to run the valve stem down onto the disk to secure the main steam line.

The valves open to allow steam to the turbine. For accident conditions, the non-return valves in conjunction with the main steam trip valves prevent the blow down of more than one steam generator for any break location, even if one valve fails to close. For example, for a break upstream of the trip valve in one line, the closure of either the non-return valve in that line or the trip valves in the other lines prevents the blow down of the other steam generators.

Method of Testing

The piping downstream of each non-return valve leads to a common distribution manifold and cannot be isolated. Therefore, performing a back seat test using flow is not practical. Also, valve disassembly and inspection are not practical alternatives due to the size of the valve and the weight of the disk.

However, an alternative exists to verify that the disk moved to the valve seat during the reactor coolant system (RCS) cool down. When the RCS temperature is between 350 °F and 195 °F during the cool down process, the main steam trip valves are closed. Then the main steam non-return valves close in response to the loss of steam flow.

After the main steam trip valve is closed, diagnostic test equipment can be used to determine the position of the disk of the NRV. After the main steam flow is stopped, the non-return valve stem is run down onto the disk after the disk returns to the seat. A change in the running force within the normal travel of the stem indicates a resistance to stem movement (i.e., a stuck disk). Verifying that the stem travels to the seated disk with nominal changes in the running force indicates that the disk is on the seat. The test requires that the cool down process be delayed between one to two hours to setup the instrumentation and to perform the test on each of three valves.

The diagnostic test equipment provides two methods for detecting changes in the running force. The test can be performed either at the valve by monitoring the yoke strain using a permanently mounted force sensor or at the motor control center (MCC) by monitoring motor current. The first method converts yoke strain directly to stem load. A signature is generated that will show any changes in the stem load which would indicate a stuck or binding valve disk. The second and more sensitive method monitors a single phase of the motor current. The motor current information is used to generate motor power and power factor signatures which are very sensitive to changes in stem load. Changes in motor load would again indicate a stuck or binding valve disk. In both methods, the valve switch probes are monitored to determine the status of the torque and limit switches, and the open and closed bypass switches in the motor operator control circuit over the course of stem travel. The second method is preferred.

Testing Frequency Discussion

Full stroke or part stroke exercising of these valves during power operation would result in a turbine and reactor trip. Plant cool down procedures require that the NRV stem be run down onto the disk to isolate the main steam system after main steam flow is stopped. The diagnostic testing must be performed when the NRVs are initially closed during the cool down to accurately assess the piston-disk assembly's as-found position. As indicated above, the diagnostic test will delay the cool down process from between one to two hours. Some cold shutdown outages are forced outages that result from exceeding a Technical Specification limit such as unidentified RCS leakage. The emphasis in a forced outage cool down is to reach cold shutdown as rapidly as possible and to mitigate the cause of the forced outage. Stopping this process to perform the

diagnostic test would complicate the operators task to secure the plant and may reduce plant safety. However, during planned cold shutdowns where there are no mitigating circumstances, there is adequate time to notify the test personnel, carry the equipment into the field and perform the test.

There is no evidence in the valve history that a valve has stuck in the partial open position. The piston-disk assembly is not attached to any other internal part, the 1,200 lb piston-disk assembly is maintained parallel within the valve body cylinder and the main steam system is very clean. Consequently, there is no mechanism to prevent the disk from dropping from the full open position to the valve seat.

Testing Frequency

The diagnostic test described above will be performed on each main steam non-return valve during the cool down process going into each planned cold shutdown. This test will not be performed more often then once every three months. The valves are verified open during normal plant operation.

COLD SHUTDOWN JUSTIFICATION CSV-8

System : Main Steam

Valve(s): 2-MS-TV-209

Category: B

Class : 3

Function: Main Steam High Pressure Drain to Condenser Isolation Valve

Cold Shutdown Justification

Full or part-stroke exercising this valve during power operation would cause undesirable pressure transients in the High Pressure Secondary Drains System. Also, the valve controller does not allow for a part-stroke exercise test. The increased level of safety gained from exercising this valve during power operation does not justify the operational consequences of these pressure variations.

Testing Frequency

This valve will be full stroke exercised every cold shutdown but not more frequently than once every three months.

COLD SHUTDOWN JUSTIFICATION CSV-9

System : Main Steam

Valve(s): 2-MS-TV-201A
2-MS-TV-201B
2-MS-TV-201C

Category: B

Class : 2

Function: Main Steam Header Trip Valves

Cold Shutdown Justification

These valves are in positions required to sustain power operation. Full or part-stroke exercising these valves during normal operation would result in a reactor trip and safety injection. Also, the valve controllers do not allow for a part-stroke exercise test.

Testing Frequency

These valves will be full stroke exercised every cold shutdown but not more frequently than once every three months.

COLD SHUTDOWN JUSTIFICATION CSV-10

System : Safety Injection

Valve(s): 2-SI-MOV-2865A
2-SI-MOV-2865B
2-SI-MOV-2865C

Category: B

Class : 2

Function: SI Accumulator Discharge Isolation Valves

Cold Shutdown Justification

The Accumulator Discharge Isolation Valves are in their safety positions with power removed from the valve actuators during Modes 1, 2, and 3, and when the reactor coolant system pressure is greater than 2000 psig as verified in Technical Specification SR 3.5.1.5. In Modes 1 and 2, and in Mode 3 with the reactor coolant system pressure greater than 1000 psig, the accumulator operability requirements are based on full power operation (Technical Specification LCO 3.5.1). Full or part-stroke exercising during power operation would be in violation of Technical Specification LCO 3.5.1 and decrease plant safety. Also, the valve controllers do not allow for a part-stroke exercise test. During cold shutdown, the reactor coolant system pressure must be less than 1000 psig before the valves are tested.

Testing Frequency

These valves will be full stroke exercised every cold shutdown when the reactor coolant system pressure is less than 1000 psig but not more frequently than once every three months.

COLD SHUTDOWN JUSTIFICATION CSV-11

System : Instrument Air

Valve(s): 2-IA-504 2-IA-531
2-IA-510 2-IA-537
2-IA-516 2-IA-543
2-IA-525 2-IA-549

Category: AC

Class : NC

Function: Air Accumulator Isolation Check Valves

Cold Shutdown Justification

Check valves 2-IA-504, 510 and 516 isolate the normal instrument air supply from the backup bottled air supply for the main steam pressure control valves 2-MS-PCV-201A, B and C. Valves 2-IA-525, 531 and 537 isolate the normal instrument air supply to the auxiliary feedwater valves 2-FW-HCV-200A, B and C. Valves 2-IA-543 and 549 isolate the normal instrument air supply to the auxiliary feedwater valves 2-FW-PCV-259A and B.

To back seat test check valves 2-IA-504, 510 and 516, the instrument air system must be isolated to all three main steam pressure control valves and the lines vented. To back seat test check valves 2-IA-525, 531, 537, 543 and 549, the instrument air system must be isolated to all five auxiliary feedwater valves and the lines vented. Isolating this many valves that are important to safety during normal operation would degrade the safety of the plant and be disruptive to plant operation.

Testing Frequency

These check valves will be exercised open and closed every cold shutdown but not more frequently than once every three months.

COLD SHUTDOWN JUSTIFICATION CSV-12

System : Main Steam

Valve(s): 2-MS-TV-213A
2-MS-TV-213B
2-MS-TV-213C

Category: B

Class : 2

Function: Main Steam Trip Bypass Valves

Cold Shutdown Justification

These trip valves are opened only during plant startup to provide flow paths for steam from each of the steam generators to equalize pressure across the main steam trip valves. They remain closed during normal operation to prevent the unrestricted release of steam from multiple steam generators in the event of a downstream steam line rupture and to isolate the steam generators (automatically close on steam line or IHH isolation) in the event of a LOCA or steam generator tube rupture. When closed, they provide isolation of the unaffected steam generators thus ensuring an adequate supply of steam for AFW pump turbine operation. They are designated as containment isolation valves (non-leak tested). There is a remote possibility that these valves would have to close during plant startup; therefore, they are considered active to the closed position only during plant startup. During normal operation they are passive in the closed position and do not require quarterly testing. They will be tested prior to startup to ensure operability.

Testing Frequency

These valves will be full stroke exercised every cold shutdown prior to startup but not more frequently than once every three months.

COLD SHUTDOWN JUSTIFICATION CSV-13

System : Reactor Coolant

Valve(s): 2-RC-PCV-2455C
2-RC-PCV-2456

Category: BC

Class : 1

Function: Pressurizer Power Operated Pressure Control Valves

Cold Shutdown Justification

Full or part-stroke exercising these valves during power operations would cause high differential pressure across the PCV Block Valves. Although these valves are designed to accommodate this differential pressure, cycling would eventually degrade the block valves seating capability, thus decreasing plant safety. Also, the valve controllers do not allow for a part-stroke exercise test.

Testing Frequency

These valves will be full stroke exercised every cold shutdown but not more frequently than once every three months.

COLD SHUTDOWN JUSTIFICATION CSV-14

System : Service Water

Valve(s): 2-SW-MOV-208A
2-SW-MOV-208B

Category: B

Class : 3

Function: Component Cooling Heat Exchanger Service Water Supply Isolation Valves

Cold Shutdown Justification

These isolation valves are located in series on service water supply to the component cooling heat exchangers. The component cooling heat exchangers carry a majority of the heat load for the service water system. When the heat exchangers are isolated, service water flow decreases to less than 10% of normal flow. Due to the design of the service water pumps, the pumps experience harmful high-magnitude vibrations as the service water flow decreases through a range from 7000 gpm to 6000 gpm. These pumps cannot be stopped during the valve exercise test because they provide service water to other plant heat loads. Changing the service water system flow through the component cooling water heat exchangers will cause unnecessary plant transients. Therefore, performing the valve exercise test as frequently as once every three months should be avoided due to the harmful effects that the testing has on the service water pumps.

The valve controllers do not allow for a partial-stroke exercise test. To reduce the harmful effects of high-magnitude vibrations on the service water pumps, the isolation valves will be full-stroke exercised on a cold shutdown frequency.

Testing Frequency

These valves will be full stroke exercised every cold shutdown but not more frequently than once every three months.

COLD SHUTDOWN JUSTIFICATION CSV-15

System : Quench Spray

Valve(s): 2-QS-MOV-202A
2-QS-MOV-202B

Category: B

Class : 2

Function: Chemical Addition Tank Discharge Isolation Valves

Cold Shutdown Justification

These normally closed six inch motor operated isolation valves are located in parallel flow paths from the refueling water chemical addition tank to the reactor water storage tank (RWST). The piping between the isolation valves and the chemical addition tank contains high concentrations of sodium hydroxide. To exercise the motor operated valves, downstream manual isolation valves must be closed to prevent the sodium hydroxide from entering the quench spray system and chemically contaminating the boric acid solution in the RWST.

After the motor operated isolation valves are stroked open and closed, the piping between the motor operated valves and the downstream manual isolation valves must be drained of sodium hydroxide. Approximately five gallons of highly caustic fluid are drained into a plastic container after each valve test. Draining the piping presents a significant personnel hazard. Sodium hydroxide causes severe burns if it comes in contact with the skin. The test personnel must wear rubber gloves, boots and face shields.

The drains are located outdoors and are near to the ground, which makes collection difficult. If any sodium hydroxide were released to the ground, it would create a reportable environmental release event. The soil that is contaminated must be neutralized by the chemistry department. Partial stroke testing of these valves presents the same hazards as full stroke testing.

To reduce the number of times that test personnel are exposed to sodium hydroxide, the motor operated isolation valves will be tested on a cold shutdown frequency.

Testing Frequency

These valves will be full stroke exercised on a cold shutdown frequency but not more frequently than once every three months.

COLD SHUTDOWN JUSTIFICATION CSV-16

System : Residual Heat Removal

Valve(s): 2-RH-7
2-RH-15

Category: C

Class : 2

Function: RHR Pump Discharge Check Valves

Cold Shutdown Justification

These RHR pump discharge check valves can only be exercised to the open position and verified closed when the RHR pumps 2-RH-P-1A and 2-RH-P-1B are running. The low pressure pumps take suction from and discharge to the reactor coolant system which operates at 2235 psig. This pressure is well above the operating pressure of the pumps, therefore, testing during normal operation is not practical.

Testing Frequency

These valves will be full stroke exercised every cold shutdown but not more frequently than once every three months.

COLD SHUTDOWN JUSTIFICATION CSV-17

System : Chemical & Volume Control

Valve(s): 2-CH-MOV-2380
2-CH-MOV-2381

Category: A

Class : 2

Function: Reactor Coolant Pump Seal Water Return Containment Isolation Valves

Cold Shutdown Justification

Charging flow to the reactor coolant pump seals is required at all times while the pumps are in operation. Failure of one of these valves in the closed position could result in damage to the reactor coolant pump seal, thus placing the plant in an unsafe condition. Also, the valve controllers do not allow for a part-stroke exercise test. The reactor coolant pumps must be secured and reactor coolant pressure must be above 100 psig to perform the exercise tests. If the reactor coolant pressure is less than 100 psig, there could be back flush past the reactor coolant pump seals, which could damage the seals.

Testing Frequency

Exercise every cold shutdown when the reactor coolant pumps are secured and reactor coolant pressure is above 100 psig but not more frequently than once every three months.

COLD SHUTDOWN JUSTIFICATION CSV-18

System : Reactor Coolant

Valve(s): 2-RC-SOV-201A-1
2-RC-SOV-201A-2
2-RC-SOV-201B-1
2-RC-SOV-201B-2

Category: B

Class : 1

Function: Reactor Vessel Vent Line Isolation Valves

Cold Shutdown Justification

These valves are the Reactor Vessel Head Vent Valves. Full or part-stroke exercising these valves at power could release reactor coolant into the reactor vessel refueling cavity. Stroking of these valves has been performed while the Reactor Coolant System (RCS) was pressurized. This test revealed that when the upstream valve was stroked, the downstream valve tended to lift and then reseat due to the motive force of the steam. As long as these valves remain closed under RCS pressure, they are an effective isolation boundary. However, these valves should not be stroked while the RCS is fully pressurized, because a valve could develop a leak across the seat during the exercise test due to the high differential pressures and exposure to steam. These valves will be exercised during each cold shutdown when the RCS is at a reduced pressure. Testing at a reduced RCS pressure allows the valves to seat properly and maintain RCS boundary integrity.

Testing Frequency

Exercise for operability during cold shutdown when the Reactor Coolant System is at a reduced pressure but not more frequently than once per three months.

COLD SHUTDOWN JUSTIFICATION CSV-19

System : Auxiliary Feedwater

Valve(s): 2-FW-HCV-200A
2-FW-HCV-200B
2-FW-HCV-200C

Category: B

Class : 3

Function: Standby Auxiliary Feedwater Supply Valves

Cold Shutdown Justification

Valve position is controlled by turning a knob on a potentiometer. Several turns of the knob are necessary to full stroke the valve, which would not simulate a fail safe test. Isolating instrument air and electrical power to the valve is the only valid method for performing a fail safe test and full stroke exercising these valves. The fail safe test cannot be performed during normal operation because these valves must be available in the event of a reactor trip.

Testing Frequency

These valves will be partial stroke exercised every three months during the turbine driven AFW pump tests and full stroke exercised every cold shutdown but not more frequently than once every three months.

COLD SHUTDOWN JUSTIFICATION CSV-20

System : Auxiliary Feedwater

Valve(s): 2-FW-PCV-259A
2-FW-PCV-259B

Category: B

Class : 3

Function: Auxiliary Feedwater Pressure Control Valves

Cold Shutdown Justification

During normal operation, these valves control auxiliary feedwater header pressure and cannot be full stroked. Isolating instrument air and electrical power to the valves is the only valid method for performing a fail safe test and full stroke exercising these valves. The fail safe test cannot be performed during normal operation because these valves must be in service.

Testing Frequency

These valves will be partial stroke exercised every three months during the turbine driven AFW pump tests and full stroke exercised every cold shutdown but not more frequently than once every three months.

COLD SHUTDOWN JUSTIFICATION CSV-21

System : Feedwater

Valve(s): 2-FW-62
2-FW-94
2-FW-126

Category: C

Class : 2

Function: Main Feedwater Supply Isolation Check Valves

Cold Shutdown Justification

These check valves must seat upon reversal of flow to fulfill their safety functions. The only method to verify this actuation is to perform a back pressure test. Since the valves must be open to sustain power operation, they cannot be tested every three months.

Testing Frequency

These check valves will be tested in the closed position every cold shutdown but not more frequently than once every three months. Normal operation of the main feedwater system verifies these valves open.

COLD SHUTDOWN JUSTIFICATION CSV-22

System : Auxiliary Feedwater

Valve(s): 2-FW-63 2-FW-129
2-FW-65 2-FW-150
2-FW-95 2-FW-167
2-FW-97 2-FW-185
2-FW-127 2-FW-279

Category: C

Class : 3

Function: Auxiliary Feedwater Header Check Valves

Cold Shutdown Justification

These valves can be back seat tested with auxiliary feedwater flow. However, the back seat test involves extended periods of auxiliary feedwater flow to the steam generators. Extended periods of relatively cold auxiliary feedwater flow to the steam generators when the plant is at power causes reactivity transients. Therefore, the back seat tests should be performed during cold shutdowns.

Testing Frequency

Valves 2-FW-95, 129 and 279 are in dedicated flow paths and are full flow tested every three months. Valves 2-FW-150, 167 and 185 are on the minimum flow recirculation lines and are full flow tested every three months. The remaining valves will be full flow tested every cold shutdown but not more frequently than once every three months. These valves will be exercised closed every cold shutdown but not more frequently than once every three months.

COLD SHUTDOWN JUSTIFICATION CSV-23

System : Auxiliary Feedwater

Valve(s): 2-FW-70
2-FW-102
2-FW-134

Category: C

Class : 2

Function: Auxiliary Feedwater Header Check Valves

Cold Shutdown Justification

The close position for these valves is the non-safety position because other boundaries upstream serve the reverse flow safety function. The valves are located near the main feedwater system header and cannot be isolated from the header. The only way to verify the closed position using flow is to perform a back seat test using main feedwater header pressure. To perform the test, pressure gauges must be installed upstream of the valves and the piping upstream must be partially drained and vented. The upstream piping is then isolated and the differential pressure across the check valve is measured and compared to an acceptance criterion. The valves will be exercised only during cold shutdowns and refueling outages because the small increase in safety gained by testing every three months does not justify the burden of setting up test equipment, draining lines and performing the back seat tests. This technical basis is consistent with the NRC position on this subject that is described in NUREG-1482, Revision 1, Section 4.1.6, entitled "Extension of Test Interval to Refueling Outage for Check Valves Verified Closed by Leak Testing."

Testing Frequency

These valves will be full stroke exercised open every three months and closed every cold shutdown but not more frequently than once every three months.

COLD SHUTDOWN JUSTIFICATION CSV-24

System : Auxiliary Feedwater

Valve(s): 2-FW-156
2-FW-172
2-FW-192

Category: C

Class : 3

Function: Auxiliary Feedwater Pump Discharge Check Valves

Cold Shutdown Justification

These valves can be back seat tested with auxiliary feedwater flow. However, the back seat test involves extended periods of auxiliary feedwater flow to the steam generators. Extended periods of relatively cold auxiliary feedwater flow to the steam generators when the plant is at power causes reactivity transients. Therefore, the back seat tests should be performed during cold shutdowns.

Testing Frequency

These valves will be full stroke exercised open every three months and closed every cold shutdown but not more frequently than once every three months.

COLD SHUTDOWN JUSTIFICATION CSV-25

System : Instrument Air

Valve(s): 2-IA-TV-202A
2-IA-TV-202B

Category: A for 2-IA-TV-202A
B for 2-IA-TV-202B

Class : 2

Function: Instrument Air Supply to Containment Isolation Valves

Cold Shutdown Justification

Testing these trip valves to the closed position interrupts the instrument air (IA) supply to containment including IA supply to the component cooling (CC) trip valves that isolate flow to the Reactor Coolant Pumps (RCPs) thermal barriers, lube oil, stator and/or shroud coolers. The IA trip valves are in series. If one of these valves failed closed, instrument air to containment may be interrupted for an extended period. In this case, the CC trip valves would be maintained open only be the compressed air system inside containment. The non-safety related compressed air system may not be able to sustain plant operation for an extended period. Therefore, to avoid challenging plant operation, the IA trip valves should only be exercised during cold shutdown when the RCPs are secured.

Testing Frequency

These valves will be full stroke exercised every cold shutdown when the RCPs are secured but not more frequently than once every three months.

COLD SHUTDOWN JUSTIFICATION CSV-26

System : CH

Valve(s): 1-CH-118
1-CH-133

Category: C

Class : 3

Function: Boric Acid Transfer Pump Discharge Check Valves

Cold Shutdown Justification

To achieve full flow through these check valves, a flow path must be established to the reactor coolant system. This test would allow the injection of boric acid into the reactor coolant system which would upset the boron concentration in the primary plant water.

Testing Frequency

These valves will be full stroke exercised open and closed every cold shutdown but not more frequently than once every three months.

4.7 VALVE TEST PROGRAM REACTOR REFUELING JUSTIFICATIONS

ISTC-3521 and ISTC-3522 allow for the full stroke exercising of valves during reactor refueling (but not more frequently than every three months) if it is not practical to exercise the valves during normal operation or cold shutdown. Therefore, no request for relief from testing every three months or every cold shutdown is necessary.

However, ISTC-9200 does require that these valves be specifically identified by the owner. The reactor refueling justifications identify and provide the technical basis for valves exercised during reactor refueling outages.

REACTOR REFUELING JUSTIFICATION RRV-1

System : Component Cooling

Valve(s): 2-CC-78
2-CC-115
2-CC-152

Category: AC

Class : 2

Function: CC Supply to Reactor Coolant Pump Containment Isolation Check Valve

Reactor Refueling Justification

These check valves must seat upon reversal of flow in order to fulfill their safety functions. The only exercise method to verify this actuation is to perform a leak rate test/back pressure test. Since the valves are located inside containment and their systems are required during power operation, they cannot be tested every three months. The valves will be exercised only during refueling outages because the small increase in safety gained by testing during cold shutdown does not justify the burden of draining lines and performing leak rate tests in a subatmospheric containment. This technical basis is consistent with the NRC position on this subject that is described in NUREG-1482, Revision 1, Section 4.1.6, entitled "Extension of Test Interval to Refueling Outage for Check Valves Verified Closed by Leak Testing."

Testing Frequency

These valves will be exercised closed each reactor refueling. The open position is verified during normal operation as component cooling water is supplied to the reactor coolant pumps.

REACTOR REFUELING JUSTIFICATION RRV-2

System : Chemical & Volume Control

Valve(s): 2-CH-260 2-CH-308 2-CH-332
2-CH-284 2-CH-331 2-CH-335

Category: AC for 2-CH-331
C for 2-CH-260, 284, 308, 332 and 335

Class : 1 for 2-CH-260, 284, 308, 332 and 335
2 for 2-CH-331

Function: Charging Supply Inside Containment Isolation Check Valves (2-CH-332, 335), RC Pump Seal Water Supply Isolation Check Valves (2-CH-260, 284 and 308), and RC Pump Seal Water Return Containment Isolation Check Valve (2-CH-331)

Reactor Refueling Justification

These check valves must seat upon reversal of flow in order to fulfill their safety functions. The only method to verify this actuation is to perform a leak rate/back pressure test. Since the valves are located inside containment (subatmospheric) and their systems are required during power operation, they cannot be tested every three months. 2-CH-335 is in the normal charging line to the RCS. These lines cannot be drained during short cold shutdowns because charging flow is often maintained. 2-CH-260, 284 and 308 are in the RCP seal water supply lines, and 2-CH-331 is in the RCP seal water return line. Seal flow is maintained during cold shutdown to reduce RCS leakage and to float the RCP seals. 2-CH-332 is the charging supply to loop fill header, inside containment isolation valve. A local back seat test inside containment is required to verify closure for valve 2-CH-332. The valves will be exercised only during refueling outages because the small increase in safety gained by testing during cold shutdown does not justify the burden of draining lines and performing leak rate tests in a subatmospheric containment.

Testing Frequency

These valves will be exercised closed each reactor refueling. Valve 2-CH-335 is in the normal charging supply line. The open position is verified during normal operation. Valve 2-CH-332 is in the charging supply line to the loop fill header. The open position is verified during RCS refill during refueling outages. Valves 2-CH-260, 284 and 308 are in the seal water supply lines to the reactor coolant pumps. The open position is verified during normal operation.

REACTOR REFUELING JUSTIFICATION RRV-3

System : Fire Protection

Valve(s): 2-FP-79

Category: AC

Class : 2

Function: Fire Protection System Supply Containment Isolation Check Valve

Reactor Refueling Justification

This check valve must seat upon reversal of flow in order to fulfill its safety function. The only method to verify this actuation is to perform a leak rate/back pressure test. Since the valve is located inside containment (subatmospheric), it cannot be tested every three months. 2-FP-79 is in the containment fire protection system. Testing this valve will render the fire protection system inoperable. It will be exercised only during refueling outages because the small increase in safety gained by testing during cold shutdown does not justify the burden of draining the lines and performing a leak rate test. This technical basis is consistent with the NRC position on this subject that is described in NUREG-1482, Revision 1, Section 4.1.6, entitled "Extension of Test Interval to Refueling Outage for Check Valves Verified Closed by Leak Testing."

Testing Frequency

This valve will be exercised open and closed each reactor refueling.

REACTOR REFUELING JUSTIFICATION RRV-4

System : Post Accident Hydrogen Removal

Valve(s): 2-HC-15
2-HC-20

Category: AC

Class : 2

Function: Hydrogen Analyzer/Recombiner Containment Isolation Check Valves

Reactor Refueling Justification

Check valves 2-HC-15 and 20 open to sample hydrogen, which is a non-safety function. These valves also provide containment isolation and must seat upon reversal of flow in order to fulfill their safety functions. The only exercise method to verify closure is to perform a leakage/back pressure test.

Since the valves are located inside containment (subatmospheric), they cannot be tested every three months. Performing a leakage/back pressure test requires installing temporary leakage test equipment. Because of the effort involved, it is impractical to perform this test during cold shutdowns. These valves will be verified closed only during refueling outages. This technical basis is consistent with the NRC position on this subject that is described in NUREG-1482, Revision 1, Section 4.1.6, entitled "Extension of Test Interval to Refueling Outage for Check Valves Verified Closed by Leak Testing."

The ASME OM Code ISTC-3522(a) states in part that, "Open and close tests need only be performed at an interval when it is practicable to perform both tests." The close test can only be performed during the reactor refueling outages. Therefore, the interval for the open test can also be on a reactor refueling outage interval as allowed by ISTC-3522(a).

Testing Frequency

Check valves 2-HC-15 and 20 will be tested open and closed every reactor refueling outage.

REACTOR REFUELING JUSTIFICATION RRV-5

System : Instrument Air

Valve(s): 2-IA-250
2-IA-428

Category: AC

Class : 2

Function: Instrument Air Supply Containment Isolation Check Valves

Reactor Refueling Justification

These check valves must seat upon reversal of flow in order to fulfill their safety functions. The only method to verify this actuation is to perform a leak rate test. Since the valves are located inside containment (subatmospheric), they cannot be tested every three months. Valve 2-IA-250 is in the instrument air supply line to containment. Testing this valve renders the instruments and components supplied by instrument air inside containment inoperable.

They will be exercised only during refueling outages because the small increase in safety gained by testing during cold shutdown does not justify the burden of performing leak rate tests. This technical basis is consistent with the NRC position on this subject that is described in NUREG-1482, Revision 1, Section 4.1.6, entitled "Extension of Test Interval to Refueling Outage for Check Valves Verified Closed by Leak Testing."

Testing Frequency

These valves will be exercised open and closed each reactor refueling.

REACTOR REFUELING JUSTIFICATION RRV-6

System : Reactor Coolant

Valve(s): 2-RC-162

Category: AC

Class : 2

Function: Primary Grade Water Supply Containment Isolation Check Valves

Reactor Refueling Justification

This check valve must seat upon reversal of flow in order to fulfill its safety function. The only method to verify this actuation is to perform a leak rate test. Since the valve is located inside containment (subatmospheric), it cannot be tested every three months. The valve will be exercised only during refueling outages because the small increase in safety gained by testing during cold shutdown does not justify the burden of draining lines and performing a leak rate test. This technical basis is consistent with the NRC position on this subject that is described in NUREG-1482, Revision 1, Section 4.1.6, entitled "Extension of Test Interval to Refueling Outage for Check Valves Verified Closed by Leak Testing."

Testing Frequency

This valve will be exercised open and closed each reactor refueling.

REACTOR REFUELING JUSTIFICATION RRV-7

System : Safety Injection

Valve(s): 2-SI-MOV-2836
2-SI-MOV-2869A
2-SI-MOV-2869B
2-SI-MOV-2890A
2-SI-MOV-2890B

Category: A

Class : 1

Function: High Head (2-SI-MOV-2836, 2869A and B) and Low Head (2-SI-MOV-2890 A and B) SI to RCS Containment Isolation Valves

Reactor Refueling Justification

These valves provide isolation for alternate safety injection paths to the Reactor Coolant System. As verified by Technical Specification SR 3.5.2.1, they are closed with power removed from the valve actuators during Modes 1, 2, and 3. Full or part-stroke exercising these valves during power operation would be in violation of Technical Specifications. Also, the valve controllers do not allow for a part-stroke exercise test.

Technical Specification SR 3.4.14.1 requires that these valves be leak tested following valve actuation. They will be exercised only during refueling outages because the small increase in safety gained by testing during cold shutdown does not justify the burden of performing leak rate tests.

Testing Frequency

Exercise for operability each reactor refueling.

REACTOR REFUELING JUSTIFICATION RRV-8

System : Safety Injection

Valve(s): 2-SI-MOV-2867C
2-SI-MOV-2867D
2-SI-MOV-2890C
2-SI-MOV-2890D

Category: A

Class : 1

Function: Boron Injection Tank Discharge Line to RCS Cool Legs (2-SI-MOV-2867C and D), and Low Head SI Discharge to RCS Cool Legs (2-SI-MOV-2890C and D) Containment Isolation Valves

Reactor Refueling Justification

Technical Specification SR 3.4.14.1 requires that these valves be leak tested following valve actuation. They will be exercised only during refueling outages because the small increase in safety gained by testing during cold shutdown does not justify the burden of performing leak rate tests.

Testing Frequency

Exercise for operability each reactor refueling.

REACTOR REFUELING JUSTIFICATION RRV-9

System : Safety Injection

Valve(s): 2-SI-9 2-SI-32
2-SI-12 2-SI-35
2-SI-19

Category: C

Class : 2

Function: Low Head SI Pump Suction and Discharge Check Valves

Reactor Refueling Justification

Check valve 2-SI-19 is on the suction line from the RWST to the LHSI pumps, check valves 2-SI-9 and 32 are on the discharge lines from the LHSI pumps and check valves 2-SI-12 and 35 are on the recirculation lines from the LHSI pumps. Valves 2-SI-9 and 32 cannot be full or partial stroked exercised during power operation because the LHSI pumps cannot overcome reactor coolant system pressure. During cold shutdown, the filled reactor coolant system still prevents full flow testing of the check valves. Valve 2-SI-19 can be partial stroke exercised during power operation but can only be full stroke exercised when LHSI flow can be established to the reactor coolant system. Therefore, these valves will be full flow tested every reactor refueling to verify the full open position.

To verify closure of valves 2-SI-9, 12, 32 and 35, the low head safety injection system must be isolated which can only be done at reactor refueling. By isolating the system, the test boundary is established to demonstrate adequate seat tightness for the discharge valves (2-SI-9 and 32) and discharge recirculation line valves (2-SI-12 and 35) to the non-running pump.

The configuration of the suction piping makes back seat testing valve 2-SI-19 difficult. This valve will be disassembled and inspected every reactor refueling to verify the closed position.

Testing Frequency

Valves 2-SI-12 and 35 will be full flow tested every three months. Valves 2-SI-9, 19 and 32 will be full flow tested every reactor refueling. Valves 2-SI-9, 12, 19, 32 and 35 will be exercised to the closed position every reactor refueling.

REACTOR REFUELING JUSTIFICATION RRV-10

System : Safety Injection

Valve(s): 2-SI-18

Category: AC

Class : 2

Function: RWST Supply to Charging Pump Suction Header Check Valve

Reactor Refueling Justification

Exercising this valve during power operation would require charging pump suctions be aligned with the Refueling Water Storage Tank. This alignment would cause a sudden increase in Reactor Coolant System boron inventory. Full flow for the charging system can only be established during reactor refueling when the RCS is depressurized.

To verify valve closure, the refueling water storage tank must be isolated which requires the plant to enter a one hour LCO per Technical Specification 3.5.4.B.

The only method to verify closure other than disassembly and inspection is to perform a leak rate/back pressure test. This valve is also subject to leak testing, which is performed every reactor refueling. Verification of closure will be performed during the leak test every reactor refueling instead of every cold shutdown because the small increase in safety gained by testing during cold shutdown does not justify the burden of draining the lines and performing a leak rate test. This technical basis is consistent with the NRC position on this subject that is described in NUREG-1482, Revision 1, Section 4.1.6, entitled "Extension of Test Interval to Refueling Outage for Check Valves Verified Closed by Leak Testing."

Testing Frequency

Exercise to the full open and closed positions every reactor refueling.

REACTOR REFUELING JUSTIFICATION RRV-11

System : Safety Injection

Valve(s): 2-SI-132
2-SI-136

Category: AC

Class : 2

Function: Nitrogen and Makeup Supply to Accumulators Containment Isolation Check Valves

Reactor Refueling Justification

These check valves must seat upon reversal of flow in order to fulfill their safety functions. The only method to verify closure is to perform a leak rate/back pressure test. Since the valves are located inside containment (subatmospheric), they cannot be tested every three months. These valves will be exercised only during refueling outages because the small increase in safety gained by testing during cold shutdown does not justify the burden of performing a leak rate test. This technical basis is consistent with the NRC position on this subject that is described in NUREG-1482, Revision 1, Section 4.1.6, entitled "Extension of Test Interval to Refueling Outage for Check Valves Verified Closed by Leak Testing."

Testing Frequency

These valves will be exercised open and closed each reactor refueling.

REACTOR REFUELING JUSTIFICATION RRV-12

System : Safety Injection

Valve(s): 2-SI-91 2-SI-100
2-SI-92 2-SI-105
2-SI-99 2-SI-106

Category: AC for 2-SI-91, 99 and 105
C for 2-SI-92, 100 and 106

Class : 1

Function: RCS Cold Leg SI to RCS Loops Check Valves

Reactor Refueling Justification

These Safety Injection check valves must open and valves 2-SI-91, 99 and 105 must close to fulfill their safety functions. They cannot be full or part-stroke exercised to the open position during power operation because this would thermally shock the injection system and cause unnecessary plant transients. Flow cannot be established in the low head injection lines during normal plant operation.

During cold shutdown, the filled Reactor Coolant System still prevents full design flow. Also, an exercise test could cause an over pressurization of the Reactor Coolant System and force a safety system to function.

These valves can only be tested to the closed position by draining the lines and performing a back seat leak test. Valves 2-SI-91, 99 and 105 are identified as pressure isolation valves in Technical Specification Table B 3.4.14-2 and as such are leakage tested every reactor refueling outage.

For testing to the open position, these valves will be non-intrusively monitored using a sampling plan every reactor refueling as described below.

Testing Frequency

Testing to the Open Direction

With low head pump flow, the cold leg injection valves will be acoustically monitored using a sampling plan for the disk striking the back seat every reactor refueling. The data will be analyzed to show that the disk struck the back seat, which verifies that the disk stroked to the full open position.

The sampling plan will follow the guidance described in NUREG-1482, Revision 0, Section 4.1.2. Per this plan, the valves will be placed into two groups with valves 2-SI-91, 99 and 105 in one group, and valves 2-SI-92, 100 and 106 in the other group. During initial testing using non-intrusive techniques, each valve in the group will be verified as operable.

During subsequent testing, non-intrusive verification will be performed for only one valve of the group on a rotating schedule each time the testing is performed, and the balance of the group will be flow tested. In this context, flow testing means that flow will be established in the lines but not measured. Indirect means can be used to verify that flow is established. If problems are found with the sample valve that are determined to affect the operational readiness of the valve, all valves in the group must be tested using non-intrusive techniques during the same outage. The test frequency is the same as described in ISTC-5221(c).

According to NUREG-1482, Revision 0, Section 4.1.2, the NRC staff determined that non-intrusive techniques meet the Code requirements for verifying disk movement for full stroke exercising – opening and closing – of check valves. The non-intrusive reverification allows flow testing at repeatable conditions to be performed on all valves in a group while requiring non-intrusive tests of only one of the group on a rotating basis.

This discussion of the sampling scheme was omitted from NUREG-1482, Section 4.1.2, Revision 1. However, the conclusion in NUREG-1482, Revision 0, that flow testing of all the valves in the group at repeatable conditions while monitoring one valve on a rotating basis meets the requirements of the Code, is still valid because the technical basis for the sampling plan meeting Code requirements has not changed.

Testing to the Closed Direction

These valves will be confirmed closed every reactor refueling.

REACTOR REFUELING JUSTIFICATION RRV-13

System : Safety Injection

Valve(s): 2-SI-151 2-SI-170
2-SI-153 2-SI-185
2-SI-168 2-SI-187

Category: AC

Class : 1

Function: SI Accumulator Discharge Check Valves

Reactor Refueling Justification

These valves cannot be flow tested during normal operation because the accumulator pressure (600 to 650 psig) is below Reactor Coolant System pressure and the injection of borated water would upset the reactor coolant chemistry.

During cold shutdown, the RCS pressure may still prevent full flow testing. Also, discharging the accumulators would challenge the Low Temperature Overpressure Protection System.

The accumulators must be isolated to verify closure using back flow. The small increase in safety gained by performing the back seat check valve tests every cold shutdown versus every reactor refueling does not justify the added burden of the increased test frequency.

There is no installed instrumentation that can measure individual flow rates for these valves. For testing to the open position, these valves will be non-intrusively monitored using a sampling plan every reactor refueling as described below.

Testing Frequency

Testing to the Open Direction

With flow from each accumulator, these check valves will be acoustically monitored using a sampling plan for the disk striking the back seat every reactor refueling. The data will be analyzed to show that the disk struck the back seat, which verifies that the disk stroked to the full open position.

The sampling plan will follow the guidance described in NUREG-1482, Revision 0, Section 4.1.2. Valves 2-SI-153, 170 and 187 are closest to the reactor coolant system and will be in one group, and valves 2-SI-151, 168 and 185 will be in the other group. During initial testing using non-intrusive techniques, each valve in the group will be verified as operable.

During subsequent testing, non-intrusive verification will be performed for only one valve of the group on a rotating schedule each time the testing is performed, and the balance of the group will be flow tested. In this context, flow testing means that flow will be established in the lines but not measured. Indirect means can be used to verify that flow is established. If problems are found with the sample valve that are determined to affect the operational readiness of the valve, all valves in the group must be tested using non-intrusive techniques during the same outage. The test frequency is the same as described in ISTC-5221(c).

According to NUREG-1482, Revision 0, Section 4.1.2, the NRC staff determined that non-intrusive techniques meet the Code requirements for verifying disk movement for full stroke exercising – opening and closing – of check valves. The non-intrusive reverification allows flow testing at repeatable conditions to be performed on all valves in a group while requiring non-intrusive tests of only one of the group on a rotating basis.

This discussion of the sampling scheme was omitted from NUREG-1482, Section 4.1.2, Revision 1. However, the conclusion in NUREG-1482, Revision 0, that flow testing of all the valves in the group at repeatable conditions while monitoring one valve on a rotating basis meets the requirements of the Code, is still valid because the technical basis for the sampling plan meeting Code requirements has not changed.

Testing to the Closed Direction

These valves will be confirmed closed every reactor refueling.

REACTOR REFUELING JUSTIFICATION RRV-14

System : Safety Injection

Valve(s):

2-SI-85	2-SI-117	2-SI-126
2-SI-93	2-SI-118	2-SI-128
2-SI-107	2-SI-119	
2-SI-112	2-SI-124	
2-SI-113	2-SI-125	

Category: AC for 2-SI-85, 93, 107, 119, 126 and 128
C for 2-SI-112, 113, 117, 118, 124 and 125

Class : 1

Function: High Head SI to RCS Cold Legs Check Valves (2-SI-85 and 93), High Head SI to RCS Hot Legs Check Valves (2-SI-107 and 119), SI to RCS Hot Legs Check Valves (2-SI-113, 118 and 125), Low Head to RCS Hot Legs Check Valves (2-SI-112, 117, 124, 126 and 128)

Reactor Refueling Justification

These Safety Injection check valves must open and close to fulfill their safety functions. They cannot be exercised to the open position during power operation because this would cause safety injection flow into the Reactor Coolant System which would thermally shock the injection system and cause unnecessary plant transients. Flow cannot be established in the low head injection lines during normal plant operation.

During cold shutdown, the Reactor Coolant System pressure still prevents full design flow. Also, a stroke test could cause an over pressurization of the Reactor Coolant System and force a safety system to function.

These valves can only be tested to the closed position by a back seat leak test, which requires draining the lines.

For testing to the open position, the hot leg injection valves 2-SI-112, 113, 117, 118, 124 and 125 will be non-intrusively monitored using a sampling plan every reactor refueling as described below. The remaining check valves can be full flow tested using installed instrumentation.

Testing Frequency

Valves 2-SI-112, 113, 117, 118, 124 and 125 will be exercised to the open position using non-intrusive techniques every reactor refueling. With low head pump flow, the hot leg injection valves will be acoustically monitored using a sampling plan for the disk striking the back seat every reactor refueling. The data will be analyzed to show that the disk struck the back seat, which verifies that the disk stroked to the full open position.

The sampling plan will follow the guidance described in NUREG-1482, Revision 0, Section 4.1.2. Per this plan, the valves will be placed into two groups with valves 2-SI-112, 117 and 124 in one group, and valves 2-SI-113, 118 and 125 in the other group. During initial testing using non-intrusive techniques, each valve in the group will be verified as operable.

During subsequent testing, non-intrusive verification will be performed for only one valve of the group on a rotating schedule each time the testing is performed, and the balance of the group will be flow tested. In this context, flow testing means that flow will be established in the lines but not measured. Indirect means can be used to verify that flow is established. If problems are found with the sample valve that are determined to affect the operational readiness of the valve, all valves in the group must be tested using non-intrusive techniques during the same outage. The test frequency is the same as described in ISTC-5221(c).

According to NUREG-1482, Revision 0, Section 4.1.2, the NRC staff determined that non-intrusive techniques meet the Code requirements for verifying disk movement for full stroke exercising – opening and closing – of check valves. The non-intrusive reverification allows flow testing at repeatable conditions to be performed on all valves in a group while requiring non-intrusive tests of only one of the group on a rotating basis.

This discussion of the sampling scheme was omitted from NUREG-1482, Section 4.1.2, Revision 1. However, the conclusion in NUREG-1482, Revision 0, that flow testing of all the valves in the group at repeatable conditions while monitoring one valve on a rotating basis meets the requirements of the Code, is still valid because the technical basis for the sampling plan meeting Code requirements has not changed.

Valves 2-SI-85, 93, 107, 119, 126 and 128 will be exercised to the open position using flow every reactor refueling.

Testing to the Closed Direction

These valves will be confirmed closed every reactor refueling.

REACTOR REFUELING JUSTIFICATION RRV-15

System : Safety Injection

Valve(s): 2-SI-90
2-SI-98
2-SI-104

Category: C

Class : 1

Function: High Head SI to RCS Cold Legs Check Valves

Reactor Refueling Justification

These Safety Injection check valves must open and close to fulfill their safety functions. They cannot be exercised to the open position during power operation because this would thermally shock the injection system and cause unnecessary plant transients.

During cold shutdown, the filled Reactor Coolant System still prevents full design flow. Also, a stroke test could cause an over pressurization of the Reactor Coolant System and force a safety system to function.

The only test methods which will individually back seat these valves are to perform leak tests or to use downstream pressure provided by the low head safety injection pump tests. Either test can only be performed during reactor refueling.

Testing Frequency

Exercise to the open position using flow and to the closed position every reactor refueling.

REACTOR REFUELING JUSTIFICATION RRV-16

System : Service Water

Valve(s): 2-SW-68 2-SW-94
2-SW-70 2-SW-104
2-SW-74
2-SW-84

Category: C

Class : 2 for 2-SW-74, 84, 94, 104
3 for 2-SW-68, 70

Function: Recirculation Spray Heat Exchanger Service Water Supply Check Valves

Reactor Refueling Justification

Exercising these valves would flow service water into the recirculation spray heat exchangers. Per FSAR Section 6.2.2.2.5, in order to ensure long term reliability of the heat exchangers, following each periodic test the heat exchangers are drained, purged with air and maintained in dry lay up. The logistics of this procedure make testing every three months or at cold shutdown impractical considering the small increase in system safety gained from exercising the valves.

Testing Frequency

These valves will be exercised open and closed each reactor refueling.

REACTOR REFUELING JUSTIFICATION RRV-17

System : Vacuum Priming

Valve(s): 2-VP-24

Category: AC

Class : 2

Function: Condenser Air Removal Discharge Containment Isolation Check Valve

Reactor Refueling Justification

This check valve must seat upon reversal of flow in order to fulfill its safety function. The only method to verify this actuation is to perform a leak rate test. Since the valve is located inside containment (subatmospheric), it cannot be tested every three months. The valve will be exercised during refueling outages because the small increase in safety gained by testing during cold shutdown does not justify performing a leak rate test. This technical basis is consistent with the NRC position on this subject that is described in NUREG-1482, Revision 1, Section 4.1.6, entitled "Extension of Test Interval to Refueling Outage for Check Valves Verified Closed by Leak Testing."

Testing Frequency

This valve will be exercised open and closed each reactor refueling.

REACTOR REFUELING JUSTIFICATION RRV-18

System : CH

Valve(s): 2-CH-178
2-CH-193
2-CH-208

Category: C

Class : 2

Function: Charging Pump Discharge Check Valves

Reactor Refueling Justification

The only available flow path to test these valves to the full open position is into the reactor coolant system. During cold shutdown, exercising these valves could result in over pressurization of the reactor coolant system and could force a safety system to function.

Testing Frequency

Exercise closed every three months and full open every reactor refueling.

REACTOR REFUELING JUSTIFICATION RRV-19

System : SI

Valve(s): 2-SI-6
2-SI-29

Category: AC

Class : 2

Function: Low Head SI Pump Seal Water Supply Check Valves

Reactor Refueling Justification

Due to the plant configuration, these valves cannot be verified closed using system flow. The only method to verify closure other than disassembly and inspection is to perform a back pressure test using a primary grade water supply as the pressure source. To perform the back pressure test on these 3/4" check valves, each LHSI pump must be removed from service for approximately two hours. With one ECCS train out of service, the plant must enter an action statement per Technical Specification LCO 3.5.2 and proceed to hot shutdown within 72 hours.

Including the preparation for the test which consists of connecting primary grade water to the test volume using supply hoses, the entire test for each valve takes several hours to perform. Also, the seal water line, which may contain contaminated water, must be drained and vented. Considering that one train of ECCS must be removed from service for an extended period of time which degrades the safety of the plant, and the difficulty in performing the back pressure test, testing these 3/4" check valves to the closed position every three months is not practical.

These valves are also subject to leak testing, which is performed every reactor refueling. A leak test provides more information concerning the condition of the valve seats then just a back pressure test. When compared to the Code requirements for a back seat test performed every cold shutdown, the performance of a leak test every refueling outage is an alternative that provides an acceptable level of quality and safety. This technical basis is consistent with the NRC position on this subject that is described in NUREG-1482, Revision 1, Section 4.1.6, entitled "Extension of Test Interval to Refueling Outage for Check Valves Verified Closed by Leak Testing." The open position is verified using flow every reactor refueling.

Testing Frequency

Exercise to the closed and open positions every reactor refueling.

REACTOR REFUELING JUSTIFICATION RRV-20

System : Component Cooling

Valve(s): 2-CC-276
2-CC-289
2-CC-302

Category: AC

Class : 2

Function: CC Water Supply to Containment Recirculation Air Coolers Containment Isolation Check Valves

Reactor Refueling Justification

These check valves must seat upon reversal of flow in order to fulfill their safety functions. The only exercise method to verify this actuation is to perform a leak rate test/back pressure test which would involve isolating the containment air cooling coils. The containment recirculation air cooling coils are required for normal operation to maintain containment temperature below the limit specified in Technical Specification LCO 3.6.5. Removing a cooler from service to perform the leak rate test/back pressure test may result in an increased containment temperature that could challenge the containment temperature limit. There is typically less margin to the temperature limit during the summer months. Therefore, these valves should not be tested every three months.

These valves are also subject to leak testing, which is performed every reactor refueling. A leak test provides more information concerning the condition of the valve seats then just a back pressure test. When compared to the Code requirements for a back seat test performed every cold shutdown, the performance of a leak test every refueling outage is an alternative that provides an acceptable level of quality and safety. This technical basis is consistent with the NRC position on this subject that is described in NUREG-1482, Revision 1, Section 4.1.6, entitled "Extension of Test Interval to Refueling Outage for Check Valves Verified Closed by Leak Testing."

Testing Frequency

Exercise to the closed position every reactor refueling. The open position is verified during normal system operation as cooling water is supplied to the containment recirculation coolers.

REACTOR REFUELING JUSTIFICATION RRV-21

System : Component Cooling

Valve(s): 2-CC-107
2-CC-144
2-CC-181

Category: C

Class : 3

Function: CC Supply to RC Pump Thermal Barrier Cooler Isolation Check Valves

Reactor Refueling Justification

These check valves must be locally back pressure tested to verify closure. Since the valves are located inside containment (subatmospheric), they cannot be back pressure tested during normal operation. The valves will be tested every refueling outage because the small increase in safety gained by testing during cold shutdown does not justify the burden of performing a back pressure test.

Testing Frequency

Exercise to the closed position every reactor refueling. The open position is verified during normal system operation as cooling water is supplied to the RC pump thermal barrier coolers.

REACTOR REFUELING JUSTIFICATION RRV-22

System : Recirculation Spray

Valve(s): 2-RS-20 2-QS-11
2-RS-30 2-QS-22

Category: AC for 2-QS-11 and 22
C for 2-RS-20 and 30

Class : 2

Function: Quench Spray and Outside Recirculation Spray Containment Isolation Check Valves

Reactor Refueling Justification

These valves must seat to maintain containment integrity and open to allow flow to the containment spray headers. Flow testing these valves would introduce water to the spray arrays and saturate containment. These valves can be mechanically exercised to the open and closed positions. However, the valves are located inside containment (subatmospheric) and require the construction of scaffolding before they can be exercised. The small increase in safety gained by exercising the valves during cold shutdown does not justify the burden of constructing the scaffolding.

Testing Frequency

These valves will be exercised to the open and closed positions every reactor refueling.

REACTOR REFUELING JUSTIFICATION RRV-23

System : Component Cooling

Valve(s): 2-CC-194
2-CC-199

Category: AC

Class : 2

Function: CC Water Supply to the RHR Heat Exchangers Containment Isolation Check Valves

Reactor Refueling Justification

Valves 2-CC-194 and 2-CC-199 are check valves in the component cooling lines to the RHR heat exchangers and must close for isolation and open to allow RHR flow. The valves can only be exercised open when RHR is in service during shutdown conditions. The only exercise method to verify closure is to perform a leak rate test/back pressure test. These lines cannot be drained for back seat testing because the RHR system is needed during cold shutdown to control the RCS temperature.

The full flow open test will be performed at the same frequency as the close test (every refueling outage) as allowed by ISTC-3522(a) which states in part, "Each check valve exercise test shall include open and close tests. Open and close tests need only be performed at an interval when it is practicable to perform both tests."

Testing Frequency

Exercise for closure and full open every reactor refueling.

REACTOR REFUELING JUSTIFICATION RRV-24

System : Chemical & Volume Control System

Valve(s): 2-CH-153
2-CH-495

Category: AC

Class : 2

Function: Charging Pump Supply from the VCT (2-CH-153) and Charging Pump Recirculation and Seal Water Return (2-CH-495) Containment Isolation Check Valves

Reactor Refueling Justification

Due to the plant configuration, these valves cannot be verified closed using flow. The only method to verify closure other than disassembly and inspection is to perform a leak rate/back pressure test on each valve.

During normal operation, these valves cannot be isolated to perform a back pressure test because normal letdown and charging flow, and reactor coolant pump seal flow would be interrupted. Also, if the valves were isolated during normal operation, the charging pumps would have to be secured.

These valves are also subject to leak testing, which is performed every reactor refueling. A leak test provides more information concerning the condition of the valve seats then just a back pressure test. When compared to the Code requirements for a back seat test performed every cold shutdown, the performance of a leak test every refueling outage is an alternative that provides an acceptable level of quality and safety. This technical basis is consistent with the NRC position on this subject that is described in NUREG-1482, Revision 1, Section 4.1.6, entitled "Extension of Test Interval to Refueling Outage for Check Valves Verified Closed by Leak Testing."

Testing Frequency

These valves will be exercised closed every reactor refueling. Valve 2-CH-153 will be exercised full open every three months and valve 2-CH-495 will be exercised full open every reactor refueling.

REACTOR REFUELING JUSTIFICATION RRV-25

System : Safety Injection

Valve(s): 2-SI-MOV-2867A
2-SI-MOV-2867B
2-SI-70

Category: B (2-SI-MOV-2867A and B)
C (2-SI-70)

Class : 2

Function: Boron Injection Tank Inlet Isolation valves (2-SI-MOV-2867A and B) and Boric Acid Recirculation Line Check Valve (2-SI-70)

Reactor Refueling Justification

During normal operation, the boron injection tank (BIT) is isolated from the charging system and the reactor coolant system by the inlet isolation valves 2-SI-MOV-2867A and B and the outlet isolation valves 2-SI-MOV-2867C and D. These valves open upon safety injection initiation. As shown in Figure RRV-25, the inlet valves are located on parallel paths. The normal operating pressure just upstream of the isolation valves is between 2600 and 2650 psig which is the discharge pressure of the charging pumps. The downstream pressure is approximately 40 psig. The reason for this low pressure is that the BIT boric acid solution is constantly circulated by the relatively low pressure boric acid transfer pumps.

Tests have revealed that when either 2-SI-MOV-2867A or B is opened using the normal valve actuator, the BIT and the associated piping experience a significant hydraulic transient. This hydraulic transient also perturbs the reactor coolant pumps (RCPs) seal injection flow because the RCP seal flow comes off the same header as the BIT flow. When the BIT inlet isolation valve is opened, flow to the RCP seals decreases until the BIT volume becomes pressurized. While this is happening the charging pump discharge header flow increases because of the newly opened flow path to the BIT. Once the BIT volume is pressurized, the increased charging pump discharge header flow is diverted to the RCP seal injection paths which momentarily causes a high flow condition in the RCP seals. During one test, the reactor coolant system controlled leakage limit of 30 gpm (Technical Specification LCO 3.5.5) for total seal injection flow was exceeded.

In the past, the BIT volume was pressurized slowly by manually cracking one of the inlet isolation valves, thus avoiding the hydraulic transient described above. However, this practice has been discontinued because it could be construed as preconditioning in light of IN 97-16, "PRECONDITIONING OF PLANT STRUCTURES, SYSTEMS, AND COMPONENTS BEFORE ASME CODE INSERVICE TESTING OR TECHNICAL SPECIFICATION SURVEILLANCE TESTING." Preconditioning a valve can invalidate its ASME test.

During cold shutdowns the charging system is still in use. Therefore, a high differential pressure exists across the BIT inlet isolation valves even during cold shutdowns. The hydraulic transient caused by opening the BIT inlet isolation valve with a high differential pressure across the valves places stress on the BIT and the associated piping. Also, the oscillating RCP seal injection flow may have a degrading effect on the RCP seals when the RCPs are operating. To eliminate these concerns, the exercise tests will be performed during reactor refueling when the charging system is not operating.

In the past, the BIT recirculation line isolation check valve 2-SI-70 was back seat tested using charging system pressure to create a pressure differential across the valve disk. Leakage was collected at a point upstream of the check valve. This test was performed after the inlet isolation valves are opened. The hydraulic transient described above was avoided by disabling one of the inlet isolation valves and manually cracking the valve open so as to slowly pressurized the BIT. However, this method of testing disables the BIT inlet valves and presents the potential for causing a hydraulic transient if the inlet valve is opened too quickly. The preferred method for back seat testing the check valve is during reactor refuelings when the charging system is secured and a local back seat/leak test can be performed. According to NUREG-1482, Revision 1, Section 4.1.6, "The NRC staff has determined that the need to set up test equipment constitutes adequate justification to defer reverse flow testing of a check valve to a refueling outage."

Testing Frequency

The BIT inlet isolation valves will be full stroke exercised and the BIT recirculation line check valve 2-SI-70 will be tested closed every reactor refueling. The check valve is verified open during normal operation because the contents of the BIT are continuously recirculated with the boric acid storage tank on service using the boric acid transfer pump.

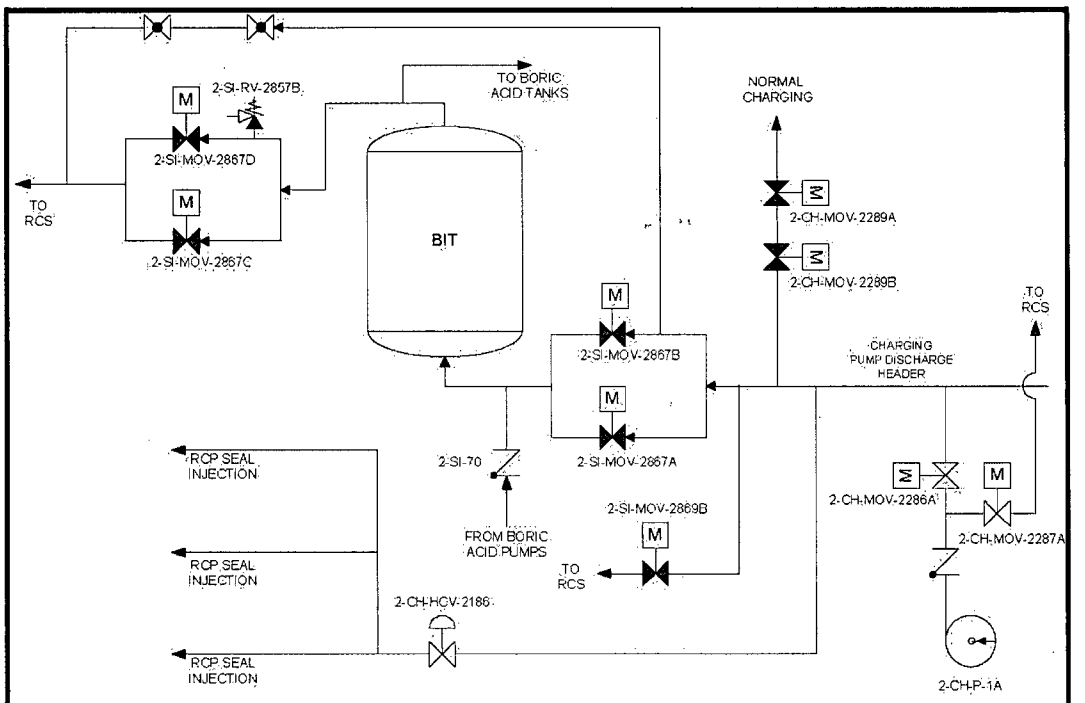

FIGURE RRV-25

REACTOR REFUELING JUSTIFICATION RRV-26

System : Service Water

Valve(s): 2-SW-MOV-201A 2-SW-MOV-205A
2-SW-MOV-201B 2-SW-MOV-205B
2-SW-MOV-201C 2-SW-MOV-205C
2-SW-MOV-201D 2-SW-MOV-205D

Category: B

Class : 3

Function: Recirculation Spray Heat Exchanger Service Water Supply and Discharge Isolation Valves

Reactor Refueling Justification

During normal operation, the lines between the Service Water supply and return header motor operated isolation valves given above and the recirculation heat exchanger isolation valves are maintained dry to ensure that no service water enters the heat exchangers. Due to a low fouling design margin, the recirculation spray heat exchangers must be maintained dry. Full or partially stroking the header motor operated isolation valves introduces service water into the lines up to the recirculation spray heat exchanger isolation valves, which could leak by and introduce water to the heat exchangers.

Whenever service water floods the piping between the header isolation valves and the recirculation spray heat exchanger isolation valves, station procedure requires that the piping be drained. To ensure that there is no leakage past the recirculation spray heat exchanger isolation valves and into the heat exchangers, station procedure also requires a containment entry to drain each heat exchanger. Because the North Anna containment is maintained slightly subatmospheric, having to enter containment makes exercising the motor operated isolation valves to the open position impracticable during normal operation or during cold shutdown when containment is under vacuum.

Testing Frequency

Exercise to the open position every reactor refueling.

REACTOR REFUELING JUSTIFICATION RRV-27

System : Recirculation Spray

Valve(s): 2-RS-103
2-RS-118

Category: C

Class : 2

Function: Casing Cooling Pump Discharge Check Valves

Reactor Refueling Justification

These check valves must open in order to perform their safety functions. Due to system design, they are not in the Casing Cooling Pump test flow path. Exercising these valves with flow would flood the containment sump.

Testing Frequency

These valves will be grouped together and one valve from this group will be disassembled and inspected every reactor refueling. A different valve will be disassembled every reactor refueling. This test frequency is in accordance with ISTC-5221(c).

REACTOR REFUELING JUSTIFICATION RRV-28

System : Safety Injection

Valve(s): 2-SI-1
2-SI-21

Category: C

Class : 2

Function: Low Head SI Pump Suction from Containment Sump Check Valves

Reactor Refueling Justification

To partial or full flow test these check valves requires taking suction from the reactor containment sump which is normally empty. Water would have to be added to the sump. However, the water would pick up contaminants from the sump. This untreated water should not be introduced into the system.

Testing Frequency

These valves will be grouped together and one valve from this group will be disassembled and inspected every reactor refueling. A different valve will be disassembled every reactor refueling. This test frequency is in accordance with ISTC-5221(c).

REACTOR REFUELING JUSTIFICATION RRV-29

System : Service Air

Valve(s): 2-GN-101 2-IA-2130
2-GN-102 2-IA-2131
2-IA-2132
2-IA-2133

Category: AC

Class : NC

Function: Bottled Air System Supply to PORV Isolation Check Valves

Reactor Refueling Justification

Due to the plant configuration, these valves cannot be verified closed using flow.

The only method to verify closure other than disassembly and inspection is to perform a local leak rate/back pressure test. To perform the leak rate/back pressure test, the normal instrument air and nitrogen supplies to the PORVs must be isolated. The PORVs are required to be operable during normal operation. Also, these valves are located inside containment (subatmospheric) making it impractical to perform the test during normal operation.

These valves are also subject to leak testing, which is performed every reactor refueling. Verification of closure will be performed during the leak test every reactor refueling instead of every cold shutdown because the small increase in safety gained by testing during cold shutdown does not justify the burden of performing a back pressure test. This technical basis is consistent with the NRC position on this subject that is described in NUREG-1482, Revision 1, Section 4.1.6, entitled "Extension of Test Interval to Refueling Outage for Check Valves Verified Closed by Leak Testing."

Testing Frequency

Exercise to the closed and open positions every reactor refueling.

REACTOR REFUELING JUSTIFICATION RRV-30

System : Service Air

Valve(s): 2-IA-497
2-IA-499

Category: A

Class : NC

Function: Bottled Air Supply to Hydrogen Recombiner Containment Isolation Valves

Reactor Refueling Justification

These non-Code check valves close in the event of a loss of pressure in the respective instrument air supply header to prevent blow down of the nitrogen reserve volume tank which supplies the hydrogen recombiner system isolation valves. Testing the check valves to the closed position requires that the instrument air supply be isolated to both Units 1 and 2 hydrogen recombiner isolation valves, the high radiation sampling subsystem, and various liquid waste and boron recovery system components. Isolating the instrument air supply to these systems every three months to perform the back pressure test would be disruptive to normal plant operation. Therefore, these valves should not be closure tested every three months.

The check valves are also subject to leak testing at least once every 24 months. These check valves will be closure tested at least once every 24 months during the leak test because the small increase in safety gained by performing the back pressure test every cold shutdown does not justify the disruption of normal operating activities of the opposite unit or the added burden of performing the back pressure test on the more frequent schedule.

Testing Frequency

Exercise to the open and close positions at least once every 24 months.

REACTOR REFUELING JUSTIFICATION RRV-31

System : Service Air

Valve(s): 2-IA-2251
2-IA-2591

Category: A

Class : NC

Function: Bottled Air Supply to Safeguards Exhaust Vent Relief Damper Isolation Valves

Reactor Refueling Justification

These non-Code check valves close in the event of a loss of pressure in the respective instrument air supply header to prevent blow down of the air reserve volume tank which supplies the safeguards exhaust vent relief dampers. Testing check valve 2-IA-2251 to the closed position requires that the instrument air supply be isolated to the Unit 1 and Unit 2 safeguards exhaust vent relief dampers, the Unit 2 containment personnel hatch, the Unit 1 ventilation vent multi-sampler particulate radiation monitor 1-VG-RM-105, the Unit 1 multi-sampler off-line radio gas radiation monitor, 1-VG-RM-106, and the Unit 2 containment atmosphere particulate and gaseous radioactivity monitors, 2-RM-RMS-259 and 260.

Disabling the containment atmosphere monitors, 2-RM-RMS-259 and 260, enters Unit 2 into an action statement per Technical Specification LCO 3.4.15 and violates Technical Requirements Manual TR 3.9.5. TR 3.9.5 applies only to Mode 6 and does not affect quarterly testing. LCO 3.4.15 applies to Modes 1, 2, 3 and 4 and requires that a RCS leak rate calculation be performed at least once per 24 hours until the monitors are restored to service.

Testing check valve 2-IA-2591 to the closed position requires that the instrument air supply be isolated to the UNIT 1 containment personnel hatch, the Unit 1 process vent radiation monitors, 1-GW-RM-101 and 102, Unit 1 ventilation vent radiation monitors, 1-VG-RM-103, 104, 112 and 113, and the Unit 1 containment atmosphere particulate and gaseous monitors, 1-RM-RMS-159 and 160.

Disabling the containment atmosphere monitors 1-RM-RMS-159 and 160 enters Unit 1 into an action statement per Technical Specification LCO 3.4.15 and violates Technical Requirements Manual TR 3.9.5. TR 3.9.5 applies only to Mode 6 and does not affect quarterly testing. LCO 3.4.15 applies to Modes 1, 2, 3 and 4 and requires that a RCS leak rate calculation be performed at least once per 24 hours until the monitors are restored to service.

Disabling the Unit 1 ventilation vent radiation monitors, 1-VG-RM-112 and 113, enters Unit 1 into an action statement per Technical Specification LCO 3.7.15. LCO 3.7.15 applies during irradiated fuel movement within the spent fuel pit and during crane operation with loads over irradiated fuel in the spent fuel pit.

In addition to entering the LCO action statement, isolating the instrument air supply to these systems every three months to perform the back pressure test would be disruptive to normal plant operation. Also, disabling four radiation monitors when testing 2-IA-2251 and eight radiation monitors when testing 2-IA-2591 reduces the ability of the operator to observe and possibly respond to changing plant conditions. Therefore, these valves should not be closure tested every three months.

The check valves are also subject to leak testing at least once every 24 months. These check valves will be closure tested at least once every 24 months during the leak test because the small increase in safety gained by performing the back pressure test every cold shutdown does not justify any disruption of normal operating activities of the opposite unit or the added burden of performing the back pressure test on the more frequent schedule.

Testing Frequency

Exercise to the open and close positions at least once every 24 months.

REACTOR REFUELING JUSTIFICATION RRV-32

System : Control Room Chilled Water System

Valve(s): 2-CD-163
2-CD-187
2-CD-211

Category: C

Class : 3

Function: Control Room Chilled Water System Pump Discharge Check Valves

Reactor Refueling Justification

Due to the plant configuration, these valves cannot be verified closed using flow. The downstream isolation motor operated valves (2-HV-MOV-211A, B and C) are interlocked with the associated upstream chilled water pumps (2-HV-P-20A, B and C). When the MOV is stroked open to allow a flow path to the check valve, the upstream pump starts. Therefore, the check valves cannot be tested closed using the discharge from another pump without disabling the interlock circuitry of the downstream MOV. Another way to perform a back pressure test is to isolate the upstream and downstream piping, vent and drain the upstream piping and use an external water source to pressurize the downstream piping. There is no external source of water such as a primary grade water supply or a domestic water supply that is available. Domestic water is hard piped to the chilled water system expansion tanks, but this source is not available for other use without a temporary modification to the piping system.

Another method to verify valve closure is disassembly and examination as allowed by ISTC-5221(c).

Testing Frequency

These valves will be grouped together and one valve from this group will be disassembled and inspected every reactor refueling. A different valve will be disassembled every reactor refueling. This test frequency is in accordance with ISTC-5221(c).

REACTOR REFUELING JUSTIFICATION RRV-33

System : Chemical & Volume Control System

Valve(s): 2-CH-155
2-CH-157
2-CH-159

Category: C

Class : 2 for 2-CH-157 and 159
3 for 2-CH-155

Function: Emergency Boration Line and Alternate Boration Line Check Valves

Reactor Refueling Justification

With the current piping configuration, the check valves cannot be back seat tested with flow. Valves 2-CH-157 and 159 have bonnets that are seal welded and the seal weld must be cut before the valve can be disassembled. For this reason, disassembly is not the preferred method to verify the close position for valves 2-CH-157 and 159. The valves will be radiographed to verify that the disks are on the seat. This examination requires that test equipment be setup in the field and the area cleared to protect personnel from exposure to the radioactive source. Therefore, performing the examination every three months or every cold shutdown is impractical.

Valve 2-CH-155 has a bolted bonnet that is not seal welded. Therefore, the valve will be disassembled and examined as allowed by ISTC-5221(c).

Testing Frequency

According to ISTC-5221(c) (1),

> "Grouping of check valves for the sample disassembly examination program shall be technically justified and shall consider, as a minimum, valve manufacturer, design, service, size, materials of construction, and orientation."

Based on these guidelines check valves 2-CH-157 and 159 will be grouped. To verify the close position, one valve will be radiographed each refueling outage on a rotating basis. This sampling plan is consistent with the guidance described in NUREG-1482, Revision 0, Section 4.1.2, for using non-intrusive testing techniques with a sampling plan. As allowed by ISTC-3522(a), these check valves will be full stroked exercised on the same test interval as the close test, which is every reactor refueling.

According to NUREG-1482, Revision 0, Section 4.1.2, the NRC staff determined that non-intrusive techniques meet the Code requirements for verifying disk movement for full stroke exercising – opening and closing – of check valves. The non-intrusive reverification allows flow testing at repeatable conditions to be performed on all valves in a group while requiring non-intrusive tests of only one of the group on a rotating basis.

This discussion of the sampling scheme was omitted from NUREG-1482, Section 4.1.2, Revision 1. However, the conclusion in NUREG-1482, Revision 0, that flow testing of all the valves in the group at repeatable conditions while monitoring one valve on a rotating basis meets the requirements of the Code, is still valid because the technical basis for the sampling plan meeting Code requirements has not changed.

Valve 2-CH-155 will be disassembled and examined every refueling outage in accordance with ISTC-5221(c).

Valves 2-CH-155, 157 and 159 will be exercised to the full open position every reactor refueling.

REACTOR REFUELING JUSTIFICATION RRV-34

System : Emergency Diesel System

Valve(s): 2-EB-15
2-EB-34
2-EB-61
2-EB-78

Category: C

Class : NC

Function: Emergency Diesel Air Receiver Tank Discharge Check Valves

Reactor Refueling Justification

The system configuration does not allow for back seat testing with flow. These valves will be disassembled and inspected on a reactor refueling test frequency (nominally every 18 months but not to exceed 24 months) per the requirements of ISTC-5221(c) to verify the closed position.

Flow through these check valves cannot be measured because instrumentation is not installed. However, failure of these valves to promptly stroke to their proper positions will affect the starting time of the diesel when the diesel is started from just one air bank. A diesel alarm will activate if the starting time exceeds start failure requirements. Verification that the diesel starts without the start failure alarm constitutes a full stroke test for the check valves. The test to start the diesels on one air bank is performed on a rotating basis once every six months. Based on this rotation, each check valve will be full flow tested once every 18 months.

Testing Frequency

One valve in the group will be disassembled and inspected on a reactor refueling test frequency (nominally every 18 months but not to exceed 24 months) and on a rotating basis to verify the closed position per the requirements of ISTC-5221(c).

Every 18 months, the check valves will be full stroke tested by discharging only one air bank to start the diesel. The failure of either the solenoid or check valves to open will promptly give a diesel alarm. Further investigation would identify problems with the operability of these valves. The diesel start time will be recorded and compared to a maximum allowable start time during this test.

REACTOR REFUELING JUSTIFICATION RRV-35

System : Main Steam System

Valve(s): 2-MS-PCV-201A
2-MS-PCV-201B
2-MS-PCV-201C

Category: B

Class : 2

Function: Main Steam Header Discharge to Atmosphere Pressure Control Valves

Reactor Refueling Justification

These valves are located above the main steam lines on the top floor of the main steam valve house. The top floor of the main steam valve house is exposed to heat loads from the main steam lines and is a high temperature environment, particularly in the summer time.

If the plant is at power, upstream isolation valves must be closed manually. Then the pressure control valves must be stroked and observed locally when performing the fail-safe test. Given that test personnel must stand near the high temperature main steam lines and valves when manipulating the upstream manual isolation valves, and the high temperatures in the main steam valve house, this test presents a hazardous situation for the test personnel when performed under high temperature conditions. To ensure the safety of test personnel, this test should be performed during reactor refueling outages when the main steam lines and the main steam valve house are cooler.

Testing Frequency

These valves will be exercised closed every reactor refueling.

REACTOR REFUELING JUSTIFICATION RRV-36

System : Chemical and Volume Control

Valve(s): 2-CH-176
2-CH-191
2-CH-206

Category: C

Class : 2

Function: Charging Pump Recirculation Line Check Valves

Reactor Refueling Justification

These charging pump recirculation line check valves cannot be back seat tested with flow because each recirculation line has a pressure reducing orifice just downstream of each check valve. If one charging pump is running, the recirculation check valves on the non-running pumps will not receive an observable differential pressure to back seat the valves.

To back seat the valves, the recirculation lines between the check valves and the downstream motor operated isolation valve 2-CH-MOV-2373 must be isolated and the volume pressurized. All three charging pumps would be secured during the test. Securing all charging pumps can only be done during cold shutdown after the reactor coolant system is depressurized. Given the difficulty of performing the back seat test, the test should be performed during reactor refueling outages.

Testing Frequency

These valves will be exercised full open and closed every reactor refueling.

REACTOR REFUELING JUSTIFICATION RRV-37

System : Residual Heat Removal

Valve(s): 2-RH-MOV-2700
2-RH-MOV-2701
2-RH-MOV-2720A
2-RH-MOV-2720B

Category: A

Class : 1

Function: RHR Supply and Return Isolation Valves

Reactor Refueling Justification

These valves isolate the residual heat removal (RHR) System, which is a 600 lb class system, from the reactor coolant system (RCS) during power operation. These valves are normally closed and cannot be opened when RCS pressure is above 418 psig due to system interlocks. Therefore, the valves cannot be full or part-stroke exercised during power operation. Also, the valve controllers do not allow for a part-stroke exercise test.

The RHR suction valves 2-RH-MOV-2700 and 2701 are located in series. To cycle these valves for testing the RHR pumps must be secured. The RHR system is required to be operable during cold shutdown and reactor refueling while fuel is in the reactor vessel. Therefore, these valves should only be cycled when the reactor vessel is defueled.

The RHR suction and return valves are tested every 18 months as required by Technical Requirements Manual TR 3.7.8. The RHR return isolation valves 2-RH-MOV-2720A and B will continue to be tested at the same interval as the suction valves because the small increase in safety gained by testing them during cold shutdown does not justify the burden of testing and tracking the RHR isolation valves on different test intervals.

Testing Frequency

These valves will be full stroke exercised every reactor refueling.

REACTOR REFUELING JUSTIFICATION RRV-38

System : Diesel Fuel Oil System

Valve(s): 2-EG-260
2-EG-272
2-EG-284
2-EG-289

Category: C

Class : NC

Function: Diesel Fuel Oil Pump Discharge Check Valves

Reactor Refueling Justification

Each fuel oil supply line is a dedicated flow path with no cross connect line to the other fuel oil supply lines. Therefore, the check valves cannot be back seat tested with flow. Given the system configuration and the accessibility of the check valves, disassembly and inspection is the preferred method to verify valve closure.

Testing Frequency

These valves will be exercised full open every three months. One valve in the group will be disassembled and inspected on a reactor refueling test frequency (nominally every 18 months but not to exceed 24 months) and on a rotating basis to verify closure per the requirements of ISTC-5221(c).

REACTOR REFUELING JUSTIFICATION RRV-39

System : FW

Valve(s) : 2-FW-609
2-FW-610
2-FW-611

Category : C

Class : 3

Function : Auxiliary Feedwater Pump Oil Cooler Check Valves

Reactor Refueling Justification

The closed position for these check valves cannot be verified by flow because reverse flow may be blocked by a downstream sight glass. Specifically, the sight glass flow indicators contain a flapper to aid in determining flow. Although the Vendor Technical Manual describes the flapper as not having a tight seal capability and is not intended as a check valve, the question remains as to how much restriction the flapper creates. The manufacturer was not able to provide information to the expected leakage past the sight glass flapper. Since the restriction of flow through the sight glass indicator caused by the internal flapper cannot be quantified, there is no assurance that the check valve will actually be in the closed position if a back flow test is used. Given the system configuration, the best method to verify that the valves close properly is to disassemble and examine the valves.

Testing Frequency

To verify the close positions, valves 2-FW-609, 610, and 611 will be grouped together, and one valve from each group will be disassembled and examined every reactor refueling. A different valve from each group will be disassembled for each examination. The test method and frequency are in accordance with ISTC-5221(c). The valves are tested with flow to the open position every three months.

REACTOR REFUELING JUSTIFICATION RRV-40

System : Quench Spray

Valve(s): 2-QS-147
2-QS-150

Category: AC

Class : 2

Function: Quench Spray Bleed Line Isolation Check Valves

Reactor Refueling Justification

These check valves are located on the bleed lines that run from the quench spray (QS) supply lines inside containment to the containment sump strainer. With the current line configuration, the valves cannot be tested full open with flow. The valves are downstream from the portion of the QS system that is used to test the QS pumps. Flow cannot be established past the QS pump discharge line motor operated isolation valves without introducing spray to the containment. Given the system configuration, manual manipulation during disassembly and inspection is the only method to verify that the valves stroke to the full open position.

Also, these valves are located inside containment (subatmospheric) making it impractical to perform the test during normal operation. The valves are subject to leak testing once every 24 months. Due to the inaccessibility of the valves, the leak testing will be performed every reactor refueling outage. Verification of the closed position will be performed by the leak test.

Testing Frequency

The valves will be disassembled and inspected each reactor refueling outage on a rotating basis to verify that the valves stroke to the full open position per the requirements of ISTC-5221(c). The closed position for each valve will be verified by leak testing every reactor refueling outage.

4.8 ALTERNATIVE TESTING FOR NON-CODE VALVES

According to the minutes of public meeting on Generic Letter 89-04, "Paragraph (g) of 10CFR 50.55a requires the use of Section XI of the ASME Code for inservice testing of components covered by the Code. For other components important to safety, the licensee also has the burden of demonstrating their continued operability." The minutes go on to state that, "The Code-required IST program is a reasonable vehicle to provide a periodic demonstration of the operability of pumps and valves not covered by the Code. If non-Code components are included in the ASME Code IST program (or some other licensee-developed inservice testing program) and certain Code provisions cannot be met, the Commission regulations (10 CFR 50.55a) do not require a 'request for relief' to be submitted to the staff. Nevertheless, documentation that provides assurance of the continued operability of the non-Code components through the performed tests should be available at the plant site." Non-Code components are components that are important to safety but are not in systems or portions of systems that are classified ASME Class 1, 2 or 3.

North Anna Power Station has elected to include certain non-Code components in the ASME IST program. Where the Code provisions cannot be met for non-Code components, alternative testing is performed that is adequate to ensure continued operability. The alternate testing is described in this section. There may be other deviations from Code provisions that are not described in this section. For these cases, documentation is available at the plant site.

As indicated in the minutes of public meeting on Generic Letter 89-04, a 'request for relief' need not be submitted for non-Code components. Therefore, the alternative tests described in this section are not 'requests for relief' but are provided for information.

NON-CODE ALTERNATIVE TESTING VNC-1

Alternative Testing for Non-Code Components
Alternative Provides Acceptable Level of Quality and Safety.

1.0 ASME Non-Code Components Affected

Valve(s): 2-IA-504 2-IA-531
2-IA-510 2-IA-537
2-IA-516 2-IA-543
2-IA-525 2-IA-549

System : Instrument Air

Category: AC

Class : NC

Function: Main Steam Pressure Control and Auxiliary Feedwater Valves Air Accumulators Isolation Check Valves

2.0 Applicable Code Edition and Addenda

ASME OM Code, 2004 Edition

3.0 Applicable Code Requirements

ISTC-3630 - Category A valves, which perform a function other than containment isolation, shall be seat leakage tested to verify their leak-tight integrity.

4.0 Reason for Alternative

Check valves 2-IA-504, 510 and 516 isolate the normal instrument air supply from the backup bottled air supply for the main steam pressure control valves 2-MS-PCV-201A, B and C. Valves 2-IA-525, 531 and 537 isolate the normal instrument air supply to the auxiliary feedwater valves 2-FW-HCV-200A, B and C. Valves 2-IA-543 and 549 isolate the normal instrument air supply to the auxiliary feedwater valves 2-FW-PCV-259A and B.

The purpose of the bottled air supplies is to ensure that the main steam PCVs and the auxiliary feedwater valves can be remotely operated following an accident. The bottled air supplies must be able to cycle the main valves a specified number of times over a predetermined period in order to meet their design requirements. In lieu of a leakage test for the isolation check valves given above, the main valves will be cycled the required number of times over the required period with the normal air supply isolated and vented. This test provides verification that the isolation check valves are leak tight enough to allow the main valves to perform their safety functions.

5.0 Alternative

In lieu of a leakage test for the isolation check valves given above, the main valves will be cycled the required number of times over the required period as defined by their design requirements with the normal air supply isolated and vented.

6.0 Duration of Alternative

The alternative described in Non-Code Alternative VNC-1 will be used for the North Anna Power Station Unit 2 Fourth Ten Year Inservice Testing Interval.

NON-CODE ALTERNATIVE TESTING VNC-2

Alternative Testing for Non-Code Components
Alternative Provides Acceptable Level of Quality and Safety.

1.0 ASME Non-Code Components Affected

Valve(s): 2-EG-SOV-700HA 2-EG-SOV-700JA
2-EG-SOV-701HA 2-EG-SOV-707JA
2-EG-SOV-700HB 2-EG-SOV-700JB

System : Emergency Diesel Air Services

Category: B

Class : NC

Function: Diesel Air Start Solenoid Valves

2.0 Applicable Code Edition and Addenda

ASME OM Code, 2004 Edition

3.0 Applicable Code Requirements

ISTC-5151(c) - Stroke time shall be measured to at least the nearest second.

4.0 Reason for Alternative

The solenoid valves have actuation times considerably under a second and there is no visual reference on the solenoid valve to determine when it has stroked. Therefore, the stroke time cannot be measured. The solenoid valves are activated every month to start the diesels. Both air banks are discharged when performing the monthly test. After the test, the air bank pressure is recorded to verify a decrease in pressure, which confirms that the air banks discharged properly.

5.0 Alternative

The solenoid valves will be full stroke exercised monthly by observing that the valves perform their intended function (if the diesel starts, the air bank pressures decrease and the air supply manifold maintains its integrity, then the solenoid valves were stroked successfully).

6.0 Duration of Alternative

The alternative described in Non-Code Alternative VNC-2 will be used for the North Anna Power Station Unit 2 Fourth Ten Year Inservice Testing Interval.

NON-CODE ALTERNATIVE TESTING VNC-3

Alternative Testing for Non-Code Components
Alternative Provides Acceptable Level of Quality and Safety.

1.0 ASME Non-Code Components Affected

Valve(s): 2-FW-FCV-2478
2-FW-FCV-2479
2-FW-FCV-2488
2-FW-FCV-2489
2-FW-FCV-2498
2-FW-FCV-2499

System : Feedwater

Category: B

Class : NC

Function: Main Feedwater Regulating and Bypass Valves

2.0 Applicable Code Edition and Addenda

ASME OM Code, 2004 Edition

3.0 Applicable Code Requirements

ISTA-3130(b) states: "Code Cases shall be applicable to the edition and addenda specified in the test plan." The edition and addenda specified in the test plan for the fourth Ten-Year interval for the North Anna Nuclear Power Plant is the ASME OM code 2004 Edition."

4.0 Reason for Alternative

Code Case OMN-8 "Alternative Rules for Preservice and Inservice Testing of Power-Operated Valves That Are Used for System Control and Have a Safety Function per OM-10," contains no applicability statement. In the latest edition/addenda incorporated by reference in 10 CFR 50.55a(b)(3) (i.e., the 2001 Edition with Addenda through the OMb-2003), the expiration date given for OMN-8 is November 20, 2006. OMN-8 is included in the 2006 Addenda to the 2004 Edition of the OM Code with a new expiration date of November 20, 2009;

however, neither the 2004 Edition of the OM Code nor any subsequent Addenda have been incorporated by reference in 10 CFR 50.55a(b)(3). Paragraph 10 CFR 50.55a(b)(6) references RG 1.192, which approves the use of Code Case OMN-8. Code Case OMN-8 provides an alternative to stroke time testing power operated control valves that have only a fail safe safety function. The pneumatically power-operated control valves listed above have only a fail safe safety function.

5.0 Alternative

The requirements of OMN-8 will be applied to the valves listed above in lieu of the provisions for power-operated control valve testing specified in paragraphs ISTC-5131, ISTC-5132 and ISTC-5133(b) in Subsection ISTC of the 2004 Edition of the ASME OM Code.

Note that paragraphs ISTC 4.2.4, ISTC 4.2.8, ISTC 4.2.9(b) and ISTC 1.2(b) identified in OMN-8 are from the 1995 Edition of Subsection ISTC and correspond to paragraphs ISTC-5131, ISTC-5132, ISTC-5133(b), and ISTC-1200(b) from the 2004 Edition for pneumatically power-operated valves, respectively.

According to TS SR 3.7.3.1, these valves must be verified to stroke in a time less than the maximum limit given in TS SR 3.7.3.1. Therefore, the stroke times will be measured and compared to the maximum limit in TS SR 3.7.3.1, but the stroke time tests will not be subject to the requirements of paragraphs ISTC-5131, ISTC-5132 and ISTC-5133(b).

6.0 Duration of Alternative

The alternative described in Non-Code Alternative VNC-3 will be used for the North Anna Power Station Unit 2 Fourth Ten Year Inservice Testing Interval.

NON-CODE ALTERNATIVE TESTING VNC-4

Alternative Testing for Non-Code Components
Alternative Provides Acceptable Level of Quality and Safety.

1.0 ASME Non-Code Components Affected

Valve(s): 2-EG-RV-204A
2-EG-RV-204B
2-EG-RV-206A
2-EG-RV-206B

System : EG

Category: C

Class : NC

Function: Diesel Fuel Oil Pump Discharge Relief Valves

2.0 Applicable Code Edition and Addenda

ASME OM Code, 2004 Edition

3.0 Applicable Code Requirements

According to ASME OM Appendix I, I-8130(a), "Test Media. Valves shall be tested with the normal system operating fluid and temperature for which they are designed. Alternative liquids and different temperatures may be used, provided the requirements of I-8300 are met." The normal system operating fluid for the diesel fuel oil pump discharge relief valves is diesel fuel oil. The valves are tested with water.

4.0 Reason for Alternative

Safety and relief valves used in liquid service are certified by the manufacturers with water in accordance with the requirements of the National Board Inspection Code. This certification process applies to valves used in diesel fuel oil service. Also, there is no correlation from water to diesel fuel oil provided by the manufacturer.

To test the relief valves with diesel fuel oil would require a separate set of test equipment. The current test equipment would be contaminated if fuel oil was used and would not be suitable for use with relief valves that are used in water service.

Testing the set point pressure of the diesel fuel oil pump discharge relief valves with water instead of diesel fuel oil is an industry accepted practice and provides adequate assurance that the relief valves will function properly and protect the diesel fuel oil pump discharge piping.

5.0 Alternative

The set pressure test for the diesel fuel oil pump discharge relief valves will be performed with water instead of diesel fuel oil.

6.0 Duration of Alternative

The alternative described in Non-Code Alternative VNC-4 will be used for the North Anna Power Station Unit 2 Fourth Ten Year Inservice Testing Interval.

NON-CODE ALTERNATIVE TESTING VNC-5

Alternative Testing for Non-Code Components
Alternative Provides Acceptable Level of Quality and Safety.

1.0 ASME Non-Code Components Affected

Safety and relief valves listed in Table VNC-5.

2.0 Applicable Code Edition and Addenda

ASME OM Code, 2004 Edition

3.0 Applicable Code Requirements

ISTC Appendix I, I-8120, "Compressible Fluid Services Other Than Steam", I-8120(h) requires that a minimum of 5 minutes shall elapse between successive openings.

ISTC Appendix I, I-8120, "Liquid Service", I-8130(g) requires that a minimum of 5 minutes shall elapse between successive openings.

4.0 Reason for Alternative

The ASME OM Code requires a minimum of two consecutive valve actuations to establish the lift setpoint of safety and relief valves and that a minimum of 5 minutes elapse between successive tests. For the valves listed in Table VNC-5, the requirement for verifying temperature stability by waiting 5 minutes between successive lift setpoint tests is inappropriate and adds no value. Lift setpoint testing is conducted using water or nitrogen as the test medium, and the tests are performed when the valve and the test medium are at the same temperature. There is a negligible effect on lift setpoint due to minor temperature deviations that might occur during testing.

Eliminating the 5-minute wait time will minimize system outage times and radiation exposure. Numerous non-Code classed safety and relief valves associated with contaminated systems are bench tested in the hot shop, located within the RCA in the Auxiliary Building, to prevent contamination.

Entry into the hot shop testing facility requires full Anti-C's. During the test, personnel are exposed to background radiation levels present in the Auxiliary Building hot shop as well as the radiation levels associated with the specific valve being tested. The proposed elimination of the hold time between successive tests for non-Code classed safety/relief valves tested under ambient conditions using a test medium at ambient conditions reduces the duration of each test. Most importantly, reducing the hold times reduces the length of time that the test personnel must spend in close proximity to the valve. As a result, personnel radiation exposure is reduced.

For all safety and relief valves, including those located in "clean areas" that are in-situ/bench-tested in the Mechanical Maintenance Shop, the proposed elimination of the hold time between successive tests will reduce the duration of each test. Since there are numerous safety/relief valve tests for both units and most require at least two people, the proposed elimination of the hold time between successive tests is expected to also result in a significant cumulative reduction in limited manpower resources.

5.0 Alternative

For non-Code classed safety and relief valves tested under ambient conditions using test medium at ambient conditions, the 5-minute hold requirement between successive openings will be deleted.

In accordance with 1-8120(a), and 1-8130(a), the test medium used will be the same as the normal system operating fluid and temperature for which the valves in Table VNC-5 were designed. For liquid service this will be water. For compressible fluid services other than steam, this will be nitrogen. In both cases, the test stand and surrounding environment ambient temperature conditions are relatively fixed with negligible changes occurring over the set pressure and seat tightness test determinations. There is a negligible effect on valve setpoint due to minor temperature deviations that might occur at these conditions.

6.0 Duration of Alternative

The alternative described in Non-Code Alternative VNC-5 will be used for the North Anna Power Station Unit 2 Fourth Ten Year Inservice Testing Interval.

Table VNC-5

Valve Number	System	ASME Class	Test Medium	Component Protected
2-CC-RV-204A	Component Cooling	NC	Water	Containment penetration
2-CC-RV-204B	Component Cooling	NC	Water	Containment penetration
2-CC-RV-204C	Component Cooling	NC	Water	Containment penetration
2-EG-RV-204A	Emergency Diesel Generator	NC	Water[1]	Diesel fuel pump oil discharge pipe
2-EG-RV-204B	Emergency Diesel Generator	NC	Water[1]	Diesel fuel pump oil discharge pipe
2-EG-RV-206A	Emergency Diesel Generator	NC	Water[1]	Diesel fuel pump oil discharge pipe
2-EG-RV-206B	Emergency Diesel Generator	NC	Water[1]	Diesel fuel pump oil discharge pipe
2-EG-RV-702HA	Emergency Diesel Generator	NC	Nitrogen	Air receiver tank
2-EG-RV-702HB	Emergency Diesel Generator	NC	Nitrogen	Air receiver tank
2-EG-RV-702JA	Emergency Diesel Generator	NC	Nitrogen	Air receiver tank
2-EG-RV-702JB	Emergency Diesel Generator	NC	Nitrogen	Air receiver tank
2-GN-RV-208A-1	Bottled Nitrogen Supply	NC	Nitrogen	Nitrogen supply lines
2-GN-RV-208A-2	Bottled Nitrogen Supply	NC	Nitrogen	Nitrogen supply lines
2-GN-RV-208A-3	Bottled Nitrogen Supply	NC	Nitrogen	Nitrogen supply lines
2-GN-RV-208B-1	Bottled Nitrogen Supply	NC	Nitrogen	Nitrogen supply lines
2-GN-RV-208B-2	Bottled Nitrogen Supply	NC	Nitrogen	Nitrogen supply lines
2-GN-RV-208B-3	Bottled Nitrogen Supply	NC	Nitrogen	Nitrogen supply lines
2-IA-RV-210	Instrument Air Supply	NC	Nitrogen	Containment penetration
2-IA-RV-211	Instrument Air Supply	NC	Nitrogen	Containment penetration

Note 1 - refer to VNC-4 for change in liquid from fuel oil to water.

5.0 STATION TECHNICAL POSITIONS

Technical Position TP-01

Bi-directional Testing of Check Valves

Purpose

The purpose of this Technical Position is to establish the station position for the verification of the non-safety direction exercise testing of check valves by normal plant operations.

Applicability

This Technical Position is applicable to testing of the non-safety function (direction) of check valves which are included in the Inservice Testing Program. This position applies to those check valves listed in Table TP-01 that are required to be tested in accordance with Subsection ISTC (ASME OM Code 2004 Edition). This Technical Position does not apply to testing of the safety function (direction) of check valves included in the Inservice Testing Program.

Background

The ASME OM Code section ISTC-3550, "Valves in Regular Use", states:

> "Valves that operate in the course of plant operation at a frequency that would satisfy the exercising requirements of this Subsection need not be additionally exercised, provided that the observations otherwise required for testing are made and analyzed during such operation and recorded in the plant record at intervals no greater than specified in ISTC-3510."

Section ISTC-3510 requires that check valves shall be exercised nominally every 3 months with exceptions (for extended periods) referenced.

Section ISTC-5221(a)(2) states:

> "Check valves that have a safety function in only the open direction shall be exercised by initiating flow and observing that the obturator has traveled [to] either the full open position or to the position required to perform its intended function(s) (see ISTA-1100), and verify closure."

Section ISTC-5221(a)(3) states:

> "Check valves that have a safety function in only the close direction shall be exercised by initiating flow and observing that the obturator has traveled [to] at least the partially open position,[3] and verify that on cessation or reversal of flow, the obturator has traveled to the seat."
>
> "[3] The partially open position should correspond to the normal or expected system flow."

Normal or expected system flow may vary with plant configuration and alignment; however, the open "safety function" of a check valve typically requires a specified design accident flow rate or some other means to verify that the valve strokes to the full open position. Since the North Anna Operations staff is trained in recognizing normal plant conditions, Operator judgment is acceptable in determining the check valve non-safety direction by obtaining normal or expected flow rates for the plant operating condition.

In summary, the check valve non-safety function direction is satisfactorily demonstrated by verifying closure or passing normal or expected flow as applicable.

Position

North Anna will verify the non-safety position of check valves included in the Inservice Testing Program. In lieu of a dedicated surveillance to perform the non-safety direction testing, the following alternate verification methods may be performed as follows:

1. Observation of plant processes that a check valve is satisfying its non-safety direction function may be used. One example is a check valve that has a safety function only in the closed direction and normally provides a flow path to maintain plant operations. If the check valve is not open to pass flow, an alarm or indication would identify a problem to the operator. The operator would respond to take appropriate actions. A Condition Report would then be generated for the abnormal plant condition which would identify the check valve failure.

2. Observation of plant logs and other records satisfied by Operator or Engineering reviews may be an acceptable method for verifying a check valves non-safety direction during normal plant operations.

The open or closed non-safety function shall be recorded at a frequency required by ISTC-3510, nominally every 3 months, with exceptions as provided, in plant records such as North Anna Operating Logs, chart recorders, station procedures, etc. All of the non-safety positions in Table TP-01 are for the open position. The test frequencies given in Table TP-01 for the open position are based on the frequency for the safety function closed position as allowed by ISTC-3522(a). According to ISTC-3522(a), "Open and close tests need only be performed at an interval when it is practicable to perform both tests." The safety function direction testing requires a Quality Record in the form of a surveillance test. Records as indicated above are satisfactory for the non-safety direction testing.

Justification

This Technical Position requires that the method of determining the non-safety position be established and documented in the IST Program Plan. The plant systems and operator actions provide for the observations that the valve is satisfying its non-safety function. Additionally, the recording of parameters which demonstrate valve position is at a frequency in accordance with ISTC-3510. These actions collectively demonstrate the non-safety position of Inservice Testing Program check valves in regular use as required by ISTC-3550.

Table TP-01

Valve Number	System	ASME Class	Non-Safety Direction	Test Freq[1]	Normal Operational Function	Alternate Position Verification Record
2-CC-78	Component Cooling	2	Open	RR	main CC supply to "A" RC pump coolers	Operator Log
2-CC-107	Component Cooling	3	Open	RR	CC supply to "A" RC pump thermal barrier cooler	Operator Log
2-CC-115	Component Cooling	3	Open	RR	main CC supply to "B" RC pump coolers	Operator Log
2-CC-144	Component Cooling	2	Open	RR	CC supply to "B" RC pump thermal barrier cooler	Operator Log
2-CC-152	Component Cooling	2	Open	RR	main CC supply to "C" RC pump coolers	Operator Log
2-CC-181	Component Cooling	3	Open	RR	CC supply to "C" RC pump thermal barrier cooler	Operator Log
2-CC-276	Component Cooling	2	Open	RR	CC supply to containment air coolers	Operator Log
2-CC-289	Component Cooling	2	Open	RR	CC supply to containment air coolers	Operator Log
2-CC-302	Component Cooling	2	Open	RR	CC supply to containment air coolers	Operator Log
2-CH-260	Chemical and Volume Control	1	Open	RR	"A" RC pump seal water supply	Operator Log
2-CH-284	Chemical and Volume Control	1	Open	RR	"B" RC pump seal water supply	Operator Log
2-CH-308	Chemical and Volume Control	1	Open	RR	"C" RC pump seal water supply	Operator Log
2-CH-335	Chemical and Volume Control	1	Open	RR	main charging supply header	Operator Log
2-FW-62	Feedwater	2	Open	CS	"A" main feedwater supply	Operator Log
2-FW-94	Feedwater	2	Open	CS	"B" main feedwater supply	Operator Log
2-FW-126	Feedwater	2	Open	CS	"C" main feedwater supply	Operator Log

Note 1 – Test frequencies are based on the frequency of the safety direction test.

Table TP-01

Valve Number	System	ASME Class	Non-Safety Direction	Test Freq[1]	Normal Operational Function	Alternate Position Verification Record
2-IA-250	Instrument Air	2	Open	RR	main instrument air supply to containment	2-OP-46.3
2-IA-428	Instrument Air	2	Open	RR	radiation monitor system return to containment	1-OP-62.2[2]
2-MS-NRV-201A	Main Steam	2	Open	CS	"A" main steam supply header	Operator Log
2-MS-NRV-201B	Main Steam	2	Open	CS	"B" main steam supply header	Operator Log
2-MS-NRV-201C	Main Steam	2	Open	CS	"C" main steam supply header	Operator Log
2-SI-70	Safety Injection	2	Open	RR	supply to boron injection tank	Operator Log
2-SI-132	Safety Injection	2	Open	RR	nitrogen supply to SI accumulators	2-OP-7.3
2-SI-136	Safety Injection	2	Open	RR	SI accumulator makeup supply	2-OP-7.3
2-WT-41	SG Chemical Feed	2	Open	03	"A" SG chemical feed supply	CH-22.914 CH-22.915 CH-22.916
2-WT-53	SG Chemical Feed	2	Open	03	"B" SG chemical feed supply	CH-22.914 CH-22.915 CH-22.916
2-WT-69	SG Chemical Feed	2	Open	03	"C" SG chemical feed supply	CH-22.914 CH-22.915 CH-22.916

Note 1 – Test frequencies are based on the frequency of the safety direction test.
Note 2 – Unit 1 procedure services Unit 1 and Unit 2 radiation monitors.

6.0 REPORTING OF INSERVICE TEST RESULTS

6.1 PUMP INSERVICE TESTING PROGRAM

A record of each pump will be maintained in accordance with ISTB-9100 that includes the following:

1) the manufacturer and the manufacturer's model and serial or other identification number,

2) a copy or summary of the manufacturer's acceptance test report if available,

3) a copy of the pump manufacturer's operating limits.

In addition to the requirements of ISTA-3120 and 3160, a record of inservice test plans and procedures will be maintained in accordance with ISTB-9200 that includes the following:

1) the identification of the pumps subject to testing,

2) the category of each pump,

3) the hydraulic circuit to be used,

4) the location and type of measurement for the required test parameters,

5) the method of determining test parameter values which are not directly measured by instrumentation.

A record of test results will be maintained in accordance with ISTA-9200.

A record of corrective action will be maintained in accordance with ISTA-9240 that includes a summary of the corrections made, the subsequent inservice tests and confirmation of operation adequacy, and the printed or typed name and signature of the individual responsible for the corrective action and verification of results.

The Pump Inservice Test Program, associated surveillance test procedures and results will be kept at North Anna Power Station. They will be available for audit by the NRC.

6.2 VALVE INSERVICE TESTING PROGRAM

A record of each valve will be maintained in accordance with ISTC-9110 that includes the following:

1) the manufacturer and the manufacturer's model and serial or other unique identification number,

2) a copy or summary of the manufacturer' acceptance test report if available,

3) preservice test results and

4) limiting value of full stroke time.

This IST Program Plan meets the requirements of ISTC-9200, Test Plans.

A record of test results will be maintained in accordance with ISTA-9230.

A record of corrective action will be maintained in accordance with ISTA-9240 that includes a summary of the corrections made, the subsequent inservice tests and confirmation of operation adequacy, and the printed or typed name and signature of the individual responsible for the corrective action and verification of results.

The Valve Inservice Test Program, associated surveillance test procedures and results will be kept at North Anna Power Station. They will be available for audit by NRC.

7.0 QUALITY ASSURANCE PROGRAM

The Pump and Valve Inservice Test Program activities will be conducted in accordance with the Technical Specifications for North Anna Power Station.