LICENSE RENEWAL APPLICATION

DIABLO CANYON POWER PLANT
UNIT 1 AND UNIT 2

Facility Operating License Nos.
DPR-80 and DPR-82

Table of Contents

Table of Contents i
List of Tables ix
List of Figures xv

1.0 ADMINISTRATIVE INFORMATION 1.1-1
1.1 GENERAL INFORMATION 1.1-1
1.1.1 Name of Applicant 1.1-1
1.1.2 Address of Applicant 1.1-2
1.1.3 Description of Business or Occupation of Applicant 1.1-2
1.1.4 Description of Organization and Management of Applicant 1.1-2
1.1.5 Class of License, Use of the Facility, and Period of Time for Which the License Is Sought 1.1-5
1.1.6 Earliest and Latest Dates for Alterations, If Proposed 1.1-5
1.1.7 Restricted Data 1.1-5
1.1.8 Regulatory Agencies 1.1-6
1.1.9 Local News Publications 1.1-6
1.1.10 Conforming Changes to Standard Indemnity Agreement 1.1-6
1.2 GENERAL LICENSE INFORMATION 1.2-1
1.2.1 Application Updates, Renewed Licenses, and Renewal Term Operation 1.2-1
1.2.2 Incorporation by Reference 1.2-1
1.2.3 Contact Information 1.2-1
1.3 DESCRIPTION OF PLANT 1.3-1
1.4 APPLICATION STRUCTURE 1.4-1
1.5 ACRONYMS 1.5-1
1.6 GENERAL REFERENCES 1.6-1

2.0 SCOPING AND SCREENING METHODOLOGY FOR IDENTIFYING STRUCTURES AND COMPONENTS SUBJECT TO AGING MANAGEMENT REVIEW AND IMPLEMENTATION RESULTS 2.1-1
2.1 SCOPING AND SCREENING METHODOLOGY 2.1-1
2.1.1 Introduction 2.1-2
2.1.2 Scoping Criteria 2.1-4
2.1.3 Scoping Methodology 2.1-16
2.1.4 Screening Methodology 2.1-22
2.1.5 Interim Staff Guidance 2.1-26
2.1.6 Generic Safety Issues 2.1-29
2.1.7 Conclusions 2.1-30
2.2 PLANT-LEVEL SCOPING RESULTS 2.2-1

2.3 SCOPING AND SCREENING RESULTS: MECHANICAL SYSTEMS 2.3-1
2.3.1 Reactor Vessel, Internals, and Reactor Coolant System 2.3-2
2.3.2 Engineered Safety Features 2.3-14
2.3.3 Auxiliary Systems 2.3-27
2.3.4 Steam and Power Conversion Systems 2.3-87
2.4 SCOPING AND SCREENING RESULTS: STRUCTURES 2.4-1
2.4.1 Containment Building 2.4-2
2.4.2 Control Room (Located In Auxiliary Building) 2.4-8
2.4.3 Auxiliary Building 2.4-10
2.4.4 Turbine Building 2.4-13
2.4.5 Radwaste Storage Facilities 2.4-16
2.4.6 Pipeway Structure 2.4-17
2.4.7 Diesel Fuel Oil Pump Vaults and Structures 2.4-18
2.4.8 230 kV Switchyard, 500 kV Switchyard, and Electrical Foundations and Structures 2.4-19
2.4.9 Fuel Handling Building 2.4-21
2.4.10 Intake Structure and Intake Control Building 2.4-24
2.4.11 Earthwork and Yard Structures 2.4-26
2.4.12 Discharge Structure 2.4-28
2.4.13 Outdoor Water Storage Tank Foundations and Encasements 2.4-29
2.4.14 Supports 2.4-31
2.5 SCOPING AND SCREENING RESULTS: ELECTRICAL AND INSTRUMENTATION AND CONTROL SYSTEMS 2.5-1
2.5.1 Electrical Component Groups 2.5-2
2.5.2 Electrical Component Groups Subject to Aging Management Review 2.5-7

3.0 AGING MANAGEMENT REVIEW RESULTS 3.0-1
3.1 AGING MANAGEMENT OF REACTOR VESSEL, INTERNALS, AND REACTOR COOLANT SYSTEM 3.1-1
3.1.1 Introduction 3.1-1
3.1.2 Results 3.1-1
3.1.3 Conclusions 3.1-15
3.2 AGING MANAGEMENT OF ENGINEERED SAFETY FEATURES 3.2-1
3.2.1 Introduction 3.2-1
3.2.2 Results 3.2-1
3.2.3 Conclusions 3.2-11
3.3 AGING MANAGEMENT OF AUXILIARY SYSTEMS 3.3-1
3.3.1 Introduction 3.3-1

3.3.2 Results 3.3-2
3.3.3 Conclusions 3.3-35
3.4 AGING MANAGEMENT OF STEAM AND POWER CONVERSION SYSTEM 3.4-1
3.4.1 Introduction 3.4-1
3.4.2 Results 3.4-1
3.4.3 Conclusions 3.4-12
3.5 AGING MANAGEMENT OF CONTAINMENTS, STRUCTURES AND COMPONENT SUPPORTS 3.5-1
3.5.1 Introduction 3.5-1
3.5.2 Results 3.5-2
3.5.3 Conclusions 3.5-29
3.6 AGING MANAGEMENT OF ELECTRICAL AND INSTRUMENTATION AND CONTROLS 3.6-1
3.6.1 Introduction 3.6-1
3.6.2 Results 3.6-2
3.6.3 Conclusions 3.6-13

4.0 TIME-LIMITED AGING ANALYSES 4.1-1
4.1 INTRODUCTION 4.1-1
4.1.1 Identification of TLAAs 4.1-2
4.1.2 Aging Management Review 4.1-4
4.1.3 Plant Classification System 4.1-4
4.1.4 Identification of Exemptions 4.1-5
4.1.5 Summary of Results 4.1-5
4.2 REACTOR VESSEL NEUTRON EMBRITTLEMENT ANALYSIS 4.2-1
4.2.1 Neutron Fluence Values 4.2-2
4.2.2 Pressurized Thermal Shock 4.2-7
4.2.3 Charpy Upper Shelf Energy 4.2-15
4.2.4 Pressure - Temperature Limits 4.2-21
4.3 METAL FATIGUE ANALYSIS 4.3-1
4.3.1 DCPP Fatigue Management Program 4.3-1
4.3.2 ASME Section III Class A Fatigue Analysis of Vessels, Piping, and Components 4.3-13
4.3.3 Fatigue Analyses of the Reactor Pressure Vessel Internals 4.3-40
4.3.4 Effects of the Reactor Coolant System Environment on Fatigue Life of Piping and Components (Generic Safety Issue 190) 4.3-43
4.3.5 Assumed Thermal Cycle Count for Allowable Secondary Stress Range Reduction Factor in ANSI B31.1 Piping 4.3-47

4.3.6 Fatigue Design and Analysis of Class IE Electrical Raceway Support Angle Fittings for Seismic Events....4.3-50
4.4 ENVIRONMENTAL QUALIFICATION OF ELECTRIC EQUIPMENT....4.4-1
4.5 CONCRETE CONTAINMENT TENDON PRESTRESS ANALYSIS....4.5-1
4.6 CONTAINMENT CONCRETE, LINER, AND PENETRATIONS....4.6-1
4.6.1 Absence of a TLAA for Containment Concrete and Liner Plate....4.6-1
4.6.2 Design Cycles for Containment Penetrations....4.6-2
4.7 PLANT-SPECIFIC TIME-LIMITED AGING ANALYSES....4.7-1
4.7.1 Crane Load Cycle Limits....4.7-1
4.7.2 TLAAs Supporting Repair of Alloy 600 Materials....4.7-6
4.7.3 Absence of a TLAA for Reactor Vessel Underclad Cracking Analyses....4.7-7
4.7.4 Absence of a TLAA for a Reactor Coolant Pump Flywheel Fatigue Crack Growth Analysis....4.7-9
4.7.5 Inservice Flaw Growth Analyses that Demonstrate Structural Stability for 40 Years....4.7-10
4.8 TLAAs SUPPORTING 10 CFR 50.12 EXEMPTIONS....4.8-1
4.9 REFERENCES....4.9-1

APPENDIX A FINAL SAFETY ANALYSIS REPORT SUPPLEMENT
A0 APPENDIX A INTRODUCTION....A-1
A1 SUMMARY DESCRIPTIONS OF AGING MANAGEMENT PROGRAMS....A-2
A1.1 ASME Section XI Inservice Inspection, Subsections IWB, IWC, and IWD....A-2
A1.2 Water Chemistry....A-2
A1.3 Reactor Head Closure Studs....A-3
A1.4 Boric Acid Corrosion....A-3
A1.5 Nickel-Alloy Penetration Nozzles Welded To the Upper Reactor Vessel Closure Heads of Pressurized Water Reactors....A-4
A1.6 Flow-Accelerated Corrosion....A-4
A1.7 Bolting Integrity....A-5
A1.8 Steam Generator Tube Integrity....A-5
A1.9 Open-Cycle Cooling Water System....A-6
A1.10 Closed-Cycle Cooling Water System....A-6
A1.11 Inspection of Overhead Heavy Load and Light Load (Related to Refueling) Handling Systems....A-6
A1.12 Fire Protection....A-7

A1.13 Fire Water System ... A-7
A1.14 Fuel Oil Chemistry ... A-8
A1.15 Reactor Vessel Surveillance ... A-8
A1.16 One-Time Inspection ... A-9
A1.17 Selective Leaching of Materials ... A-10
A1.18 Buried Piping and Tanks Inspection ... A-10
A1.19 One-Time Inspection of ASME Code Class 1 Small-Bore Piping ... A-11
A1.20 External Surfaces Monitoring Program ... A-11
A1.21 Flux Thimble Tube Inspection ... A-12
A1.22 Inspection of Internal Surfaces in Miscellaneous Piping and Ducting Components ... A-12
A1.23 Lubricating Oil Analysis ... A-13
A1.24 Electrical Cables and Connections Not Subject to 10 CFR 50.49 Environmental Qualification Requirements ... A-13
A1.25 Electrical Cables and Connections Not Subject to 10 CFR 50.49 Environmental Qualification Requirements Used in Instrumentation Circuits ... A-14
A1.26 Inaccessible Medium Voltage Cables Not Subject to 10 CFR 50.49 Environmental Qualification Requirements ... A-15
A1.27 ASME Section XI, Subsection IWE ... A-15
A1.28 ASME Section XI, Subsection IWL ... A-16
A1.29 ASME Section XI, Subsection IWF ... A-16
A1.30 10 CFR Part 50, Appendix J ... A-17
A1.31 Masonry Wall Program ... A-17
A1.32 Structures Monitoring Program ... A-17
A1.33 RG 1.127, Inspection of Water-Control Structures Associated with Nuclear Power Plants ... A-18
A1.34 Fuse Holders ... A-18
A1.35 Electrical Cable Connections Not Subject To 10 CFR 50.49 Environmental Qualification Requirements ... A-19
A1.36 Metal Enclosed Bus ... A-19
A1.37 Nickel-Alloy Aging Management Program ... A-20
A1.38 Transmission Conductor, Connections, Insulators and Switchyard Bus and Connections ... A-21
A1.39 Thermal Aging Embrittlement of Cast Austenitic Stainless Steel ... A-21

A2 SUMMARY DESCRIPTIONS OF TIME-LIMITED AGING ANALYSIS AGING MANAGEMENT PROGRAMS ... A-22
A2.1 Metal Fatigue of Reactor Coolant Pressure Boundary ... A-22

A2.2 Environmental Qualification (EQ) of Electrical Components ... A-22
A3. EVALUATION SUMMARIES OF TIME-LIMITED AGING ANALYSES ... A-24
A3.1 Reactor Vessel Neutron Embrittlement ... A-24
A3.1.1 Neutron Fluence Values ... A-24
A3.1.2 Pressurized Thermal Shock ... A-25
A3.1.3 Charpy Upper-Shelf Energy ... A-26
A3.1.4 Pressure-Temperature Limits ... A-26
A3.1.5 Low Temperature Overpressure Protection ... A-26
A3.2 Metal Fatigue Analysis ... A-28
A3.2.1 ASME Section III Class A Fatigue Analysis of Vessels, Piping, and Components ... A-29
A3.2.2 Fatigue Analyses of the Reactor Pressure Vessel Internals ... A-34
A3.2.3 Effects of the Reactor Coolant System Environment on Fatigue Life of Piping and Components (Generic Safety Issue 190) ... A-34
A3.2.4 Assumed Thermal Cycle Count for Allowable Secondary Stress Range Reduction Factor in ANSI B31.1 Piping ... A-35
A3.2.5 Fatigue Design and Analysis of Class IE Electrical Raceway Support Angle Fittings for Seismic Events ... A-36
A3.3 Environmental Qualification of Electric Equipment ... A-37
A3.4 Containment Concrete, Liner, and Penetrations ... A-39
A3.4.1 Design Cycles for Containment Penetrations ... A-39
A3.5 Plant-Specific Time-Limited Aging Analyses ... A-41
A3.5.1 Load Cycle Limits of Cranes to CMAA-70 ... A-41
A3.5.2 Inservice Flaw Growth Analyses that Demonstrate Structural Stability for 40 Years ... A-41
A4 LICENSE RENEWAL COMMITMENTS ... A-43

APPENDIX B AGING MANAGEMENT PROGRAMS
B1 APPENDIX B INTRODUCTION ... B-1
B1.1 Overview ... B-1
B1.2 Method of Discussion ... B-2
B1.3 Quality Assurance Program and Administrative Controls ... B-3
B1.4 Operating Experience ... B-4
B1.5 Aging Management Programs ... B-5
B1.6 Time-Limited Aging Analysis Programs ... B-8
B2 AGING MANAGEMENT PROGRAMS ... B-9
B2.1 Aging Management Program Details ... B-14
B2.1.1 ASME Section XI Inservice Inspection, Subsections IWB, IWC, and IWD ... B-14

B2.1.2 Water Chemistry B-18
B2.1.3 Reactor Head Closure Studs B-24
B2.1.4 Boric Acid Corrosion B-27
B2.1.5 Nickel-Alloy Penetration Nozzles Welded To the Upper Reactor Vessel Closure Heads Of Pressurized Water Reactors B-30
B2.1.6 Flow-Accelerated Corrosion B-33
B2.1.7 Bolting Integrity B-37
B2.1.8 Steam Generator Tube Integrity B-41
B2.1.9 Open-Cycle Cooling Water System B-44
B2.1.10 Closed-Cycle Cooling Water System B-47
B2.1.11 Inspection of Overhead Heavy Load and Light Load (Related To Refueling) Handling Systems B-54
B2.1.12 Fire Protection B-56
B2.1.13 Fire Water System B-61
B2.1.14 Fuel Oil Chemistry B-67
B2.1.15 Reactor Vessel Surveillance B-74
B2.1.16 One-Time Inspection B-77
B2.1.17 Selective Leaching Of Materials B-80
B2.1.18 Buried Piping and Tanks Inspection B-82
B2.1.19 One-Time Inspection of ASME Code Class 1 Small-Bore Piping B-86
B2.1.20 External Surfaces Monitoring Program B-89
B2.1.21 Flux Thimble Tube Inspection B-93
B2.1.22 Inspection of Internal Surfaces in Miscellaneous Piping and Ducting Components B-95
B2.1.23 Lubricating Oil Analysis B-99
B2.1.24 Electrical Cables and Connections Not Subject To 10 CFR 50.49 Environmental Qualification Requirements B-103
B2.1.25 Electrical Cables and Connections Not Subject To 10 CFR 50.49 Environmental Qualification Requirements Used In Instrumentation Circuits B-106
B2.1.26 Inaccessible Medium Voltage Cables Not Subject To 10 CFR 50.49 Environmental Qualification Requirements B-109
B2.1.27 ASME Section XI, Subsection IWE B-112
B2.1.28 ASME Section XI, Subsection IWL B-116
B2.1.29 ASME Section XI, Subsection IWF B-119
B2.1.30 10 CFR Part 50, Appendix J B-122
B2.1.31 Masonry Wall Program B-125
B2.1.32 Structures Monitoring Program B-129
B2.1.33 RG 1.127, Inspection of Water-Control Structures Associated With Nuclear Power Plants B-134

B2.1.34 Fuse Holders B-138
B2.1.35 Electrical Cable Connections Not Subject To 10 CFR 50.49 Environmental Qualification Requirements B-141
B2.1.36 Metal Enclosed Bus B-145
B2.1.37 Nickel-Alloy Aging Management Program B-148
B2.1.38 Transmission Conductor, Connections, Insulators and Switchyard Bus and Connections B-156
B2.1.39 Thermal Aging Embrittlement of Cast Austenitic Stainless Steel (CASS) B-163
B3 TLAA SUPPORT ACTIVITIES B-165
B3.1 Metal Fatigue of Reactor Coolant Pressure Boundary B-165
B3.2 Environmental Qualification (EQ) of Electrical Components B-170

Appendix C Not Used

Appendix D Technical Specification Changes (Not Used)

Appendix E Environmental Information

List of Tables

Table 2.1-1 Intended Functions: Abbreviations and Definitions 2.1-24
Table 2.1-2 NRC Interim Staff Guidance Associated with License Renewal 2.1-28
Table 2.2-1 DCPP Scoping Results 2.2-2
Table 2.3.1-1 Reactor Vessel and Internals 2.3-4
Table 2.3.1-2 Reactor Coolant System 2.3-7
Table 2.3.1-3 Pressurizer 2.3-9
Table 2.3.1-4 Steam Generators.....2.3-11
Table 2.3.1-5 Reactor Core.....2.3-13
Table 2.3.2-1 Safety Injection System.....2.3-16
Table 2.3.2-2 Containment Spray System 2.3-19
Table 2.3.2-3 Residual Heat Removal System.....2.3-21
Table 2.3.2-4 Containment HVAC System 2.3-25
Table 2.3.3-1 Cranes and Fuel Handling System.....2.3-30
Table 2.3.3-2 Spent Fuel Pool Cooling System.....2.3-32
Table 2.3.3-3 Saltwater and Chlorination System 2.3-35
Table 2.3.3-4 Component Cooling Water System 2.3-37
Table 2.3.3-5 Makeup Water System.....2.3-40
Table 2.3.3-6 Nuclear Steam Supply Sampling System.....2.3-44
Table 2.3.3-7 Compressed Air System 2.3-48
Table 2.3.3-8 Chemical and Volume Control System.....2.3-50
Table 2.3.3-9 Miscellaneous HVAC Systems.....2.3-55
Table 2.3.3-10 Control Room HVAC System 2.3-58
Table 2.3.3-11 Auxiliary Building HVAC System 2.3-63
Table 2.3.3-12 Fire Protection System.....2.3-66
Table 2.3.3-13 Diesel Generator Fuel Oil System.....2.3-68
Table 2.3.3-14 Diesel Generator System 2.3-72
Table 2.3.3-15 Lube Oil System.....2.3-75
Table 2.3.3-16 Gaseous Radwaste System.....2.3-76
Table 2.3.3-17 Liquid Radwaste System.....2.3-80
Table 2.3.3-18 Miscellaneous Systems In Scope ONLY Based on Criterion 10 CFR 54.4(a)(2) 2.3-85
Table 2.3.4-1 Turbine Steam Supply System.....2.3-89
Table 2.3.4-2 Auxiliary Steam System 2.3-92
Table 2.3.4-3 Feedwater System 2.3-95
Table 2.3.4-4 Condensate System.....2.3-98
Table 2.3.4-5 Auxiliary Feedwater System.....2.3-100
Table 2.4-1 Containment Building 2.4-7
Table 2.4-2 Control Room.....2.4-10
Table 2.4-3 Auxiliary Building.....2.4-12

Table 2.4-4 Turbine Building 2.4-15
Table 2.4-5 Radwaste Storage Facilities....2.4-16
Table 2.4-6 Pipeway Structure 2.4-17
Table 2.4-7 Diesel Fuel Oil Pump Vaults and Structures 2.4-19
Table 2.4-8 230 kV Switchyard, 500 kV Switchyard and Electrical Foundations and Structures 2.4-21
Table 2.4-9 Fuel Handling Building 2.4-23
Table 2.4-10 Intake Structure and Intake Control Building....2.4-25
Table 2.4-11 Earthwork and Yard Structures 2.4-28
Table 2.4-12 Discharge Structure 2.4-29
Table 2.4-13 Outdoor Water Storage Tank Foundations and Encasements 2.4-30
Table 2.4-14 Supports....2.4-34
Table 2.4-15 Component Types Assigned to Supports by Building/Structure....2.4-36
Table 2.5-1 Electrical and I&C Component Groups Requiring Aging Management Review 2.5-7
Table 3.0-1 Mechanical Environments 3.0-7
Table 3.0-2 Structural Environments....3.0-13
Table 3.0-3 Electrical and Instrument and Controls Environments....3.0-15
Table 3.1.1 Summary of Aging Management Evaluations in Chapter IV of NUREG-1801 for Reactor Vessel, Internals, and Reactor Coolant System 3.1-17
Table 3.1.2-1 Reactor Vessel, Internals, and Reactor Coolant System – Summary of Aging Management Evaluation – Reactor Vessel and Internals 3.1-45
Table 3.1.2-2 Reactor Vessel, Internals, and Reactor Coolant System – Summary of Aging Management Evaluation – Reactor Coolant System 3.1-87
Table 3.1.2-3 Reactor Vessel, Internals, and Reactor Coolant System – Summary of Aging Management Evaluation – Pressurizer....3.1-101
Table 3.1.2-4 Reactor Vessel, Internals, and Reactor Coolant System – Summary of Aging Management Evaluation – Steam Generators....3.1-112
Table 3.2.1 Summary of Aging Management Evaluations in Chapter V of NUREG-1801 for Engineered Safety Features....3.2-12
Table 3.2.2-1 Engineered Safety Features – Summary of Aging Management Evaluation – Safety Injection System 3.2-30
Table 3.2.2-2 Engineered Safety Features – Summary of Aging Management Evaluation – Containment Spray System 3.2-42

Table 3.2.2-3 Engineered Safety Features – Summary of Aging Management Evaluation – Residual Heat Removal System 3.2-47
Table 3.2.2-4 Engineered Safety Features – Summary of Aging Management Evaluation – Containment HVAC System 3.2-55
Table 3.3.1 Summary of Aging Management Evaluations in Chapter VII of NUREG-1801 for Auxiliary Systems..... 3.3-36
Table 3.3.2-1 Auxiliary Systems – Summary of Aging Management Evaluation – Cranes and Fuel Handling System 3.3-76
Table 3.3.2-2 Auxiliary Systems – Summary of Aging Management Evaluation – Spent Fuel Pool Cooling System 3.3-79
Table 3.3.2-3 Auxiliary Systems – Summary of Aging Management Evaluation – Saltwater and Chlorination System..... 3.3-87
Table 3.3.2-4 Auxiliary Systems – Summary of Aging Management Evaluation – Component Cooling Water System 3.3-93
Table 3.3.2-5 Auxiliary Systems – Summary of Aging Management Evaluation – Makeup Water System 3.3-104
Table 3.3.2-6 Auxiliary Systems – Summary of Aging Management Evaluation – Nuclear Steam Supply Sampling System 3.3-117
Table 3.3.2-7 Auxiliary Systems – Summary of Aging Management Evaluation – Compressed Air System..... 3.3-125
Table 3.3.2-8 Auxiliary Systems – Summary of Aging Management Evaluation – Chemical and Volume Control System 3.3-132
Table 3.3.2-9 Auxiliary Systems – Summary of Aging Management Evaluation – Miscellaneous HVAC Systems 3.3-161
Table 3.3.2-10 Auxiliary Systems – Summary of Aging Management Evaluation – Control Room HVAC System 3.3-167
Table 3.3.2-11 Auxiliary Systems – Summary of Aging Management Evaluation – Auxiliary Building HVAC System 3.3-176
Table 3.3.2-12 Auxiliary Systems – Summary of Aging Management Evaluation – Fire Protection System 3.3-190
Table 3.3.2-13 Auxiliary Systems – Summary of Aging Management Evaluation – Diesel Generator Fuel Oil System 3.3-199
Table 3.3.2-14 Auxiliary Systems – Summary of Aging Management Evaluation – Diesel Generator System 3.3-204
Table 3.3.2-15 Auxiliary Systems – Summary of Aging Management Evaluation – Lube Oil System 3.3-221
Table 3.3.2-16 Auxiliary Systems – Summary of Aging Management Evaluation – Gaseous Radwaste System 3.3-225
Table 3.3.2-17 Auxiliary Systems – Summary of Aging Management Evaluation – Liquid Radwaste System 3.3-236

Table 3.3.2-18 Auxiliary Systems – Summary of Aging Management Evaluation – Miscellaneous Systems In Scope ONLY for Criterion 10 CFR 54.4(a)(2) 3.3-258
Table 3.4.1 Summary of Aging Management Evaluations in Chapter VIII of NUREG-1801 for Steam and Power Conversion System 3.4-14
Table 3.4.2-1 Steam and Power Conversion System – Summary of Aging Management Evaluation – Turbine Steam Supply System 3.4-33
Table 3.4.2-2 Steam and Power Conversion System – Summary of Aging Management Evaluation – Auxiliary Steam System 3.4-47
Table 3.4.2-3 Steam and Power Conversion System – Summary of Aging Management Evaluation – Feedwater System 3.4-67
Table 3.4.2-4 Steam and Power Conversion System – Summary of Aging Management Evaluation – Condensate System 3.4-72
Table 3.4.2-5 Steam and Power Conversion System – Summary of Aging Management Evaluation – Auxiliary Feedwater System 3.4-77
Table 3.5.1 Summary of Aging Management Evaluations in Chapters II and III of NUREG-1801 for Containments, Structures, and Component Supports 3.5-30
Table 3.5.2-1 Containments, Structures, and Component Supports - Summary of Aging Management Evaluation - Containment Building 3.5-48
Table 3.5.2-2 Containments, Structures, and Component Supports - Summary of Aging Management Evaluation - Control Room 3.5-55
Table 3.5.2-3 Containments, Structures, and Component Supports - Summary of Aging Management Evaluation - Auxiliary Building 3.5-58
Table 3.5.2-4 Containments, Structures, and Component Supports - Summary of Aging Management Evaluation - Turbine Building 3.5-66
Table 3.5.2-5 Containments, Structures, and Component Supports - Summary of Aging Management Evaluation - Radwaste Storage Facilities 3.5-73
Table 3.5.2-6 Containments, Structures, and Component Supports - Summary of Aging Management Evaluation - Pipeway Structure 3.5-77

Table 3.5.2-7 Containments, Structures, and Component Supports - Summary of Aging Management Evaluation – Diesel Fuel Oil Pump Vaults and Structures 3.5-78
Table 3.5.2-8 Containments, Structures, and Component Supports - Summary of Aging Management Evaluation – 230 kV Switchyard, 500 kV Switchyard, and Electrical Foundations and Structures 3.5-83
Table 3.5.2-9 Containments, Structures, and Component Supports - Summary of Aging Management Evaluation – Fuel Handling Building 3.5-88
Table 3.5.2-10 Containments, Structures, and Component Supports - Summary of Aging Management Evaluation – Intake Structure and Intake Control Building.....3.5-94
Table 3.5.2-11 Containments, Structures, and Component Supports - Summary of Aging Management Evaluation – Earthwork and Yard Structures 3.5-102
Table 3.5.2-12 Containments, Structures, and Component Supports - Summary of Aging Management Evaluation – Discharge Structure 3.5-106
Table 3.5.2-13 Containments, Structures, and Component Supports - Summary of Aging Management Evaluation – Outdoor Water Storage Tank Foundations and Encasements 3.5-109
Table 3.5.2-14 Containments, Structures, and Component Supports - Summary of Aging Management Evaluation - Supports...3.5-111
Table 3.6.1 Summary of Aging Management Evaluations in Chapter VI of NUREG-1801 for Electrical Components.....3.6-14
Table 3.6.2-1 Electrical and Instrument and Controls – Summary of Aging Management Evaluation – Electrical Components...3.6-19
Table 4.1-1 List of TLAAs.....4.1-6
Table 4.1-2 Review of Analyses Listed in NUREG-1800 Tables 4.1-2 and 4.1-3.....4.1-9
Table 4.2-1 Unit 1 Maximum Calculated Fluence (E>1.0 MeV) 4.2-5
Table 4.2-2 Unit 2 Maximum Calculated Fluence (E>1.0 MeV) 4.2-5
Table 4.2-3 *Units 1 and 2 Calculated Fluence (E>1.0 MeV) Values at EOLE (54 EFPY)*.....4.2-6
Table 4.2-4 DCPP Unit 1 Vessel RT_{PTS} at 54 EFPY 4.2-11
Table 4.2-5 DCPP Unit 2 Vessel RT_{PTS} at 54 EFPY 4.2-13
Table 4.2-6 DCPP Unit 1 Reactor Vessel Material C_v USE at EOLE 4.2-17
Table 4.2-7 DCPP Unit 2 Reactor Vessel Material C_v USE at EOLE 4.2-19
Table 4.3-1 Summary of Monitored Fatigue Usage, and Method of Management by the Enhanced DCPP Fatigue Management Program 4.3-3

Table 4.3-2 DCPP Units 1 and 2 Transient Cycle Count and 60-year Projections 4.3-9
Table 4.3-3 Fatigue Usage Factors in the DCPP Reactor Pressure Vessels 4.3-14
Table 4.3-4 Design Codes for the Original and Replacement Reactor Vessel Closure Heads and Associated Components 4.3-17
Table 4.3-5 DCPP RCP Fatigue Usage Factors 4.3-21
Table 4.3-6 Summary of DCPP Pressurizer ASME Section III Class A Analyses and Fatigue Usage Factors 4.3-25
Table 4.3-7 DCPP Units 1 and 2 Steam Generator Cumulative Fatigue Usage 4.3-28
Table 4.3-8 Summary of Fatigue Usage Factors at NUREG/CR-6260 Sample Locations Adapted to DCPP Units 1 and 2 ....4.3-46
Table 4.3-9 Revised EAF CUF Based on 60 year Projected Numbers of Transients 4.3-47
Table 4.7-1 Crane Specifications 4.7-4
Table A4-1 License Renewal Commitments A-43

List of Figures

Figure 2.1-1 Scoping and Screening Process Flow 2.1-31
Figure 2.1-2 Station Blackout Recovery Path 2.1-32

CHAPTER 1

ADMINISTRATIVE INFORMATION

1.0 ADMINISTRATIVE INFORMATION

In accordance with the requirements of Part 54 of Title 10 of the Code of Federal Regulations (10 CFR Part 54), this application provides the technical and environmental information required for renewal of Facility Operating License No. DPR-80 and Facility Operating License No. DPR-82 for the Diablo Canyon Power Plant (DCPP), Units 1 and 2, respectively. The Units 1 and 2 operating licenses expire at midnight, November 2, 2024 and August 26, 2025, respectively. The application also applies to renewal of the source, special nuclear, and by-product materials licenses that are included in the facility operating licenses.

The application is based on guidance provided by the U.S. Nuclear Regulatory Commission (NRC) in NUREG-1800, *Standard Review Plan (SRP) for Review of License Renewal Applications for Nuclear Power Plants*, Revision 1, September 2005; Regulatory Guide 1.188, *Standard Format and Content for Applications to Renew Nuclear Power Plant Operating Licenses*, Revision 1, September 2005; and guidance provided by the Nuclear Energy Institute in NEI 95-10, *Industry Guideline for Implementing the Requirements of 10 CFR 54 – The License Renewal Rule*, Revision 6, June 2005.

This application and supporting environmental report are intended to provide sufficient information for the NRC to complete its technical and environmental reviews and allow the NRC to make the findings required by 10 CFR 54.29 in support of the issuance of renewed operating licenses for DCPP Units 1 and 2.

1.1 GENERAL INFORMATION

The application meets the filing and content requirements of 10 CFR 54.17 and 10 CFR 54.19.

1.1.1 Name of Applicant

Pacific Gas and Electric Company (PG&E) is the applicant and hereby applies for renewed operating licenses for the DCPP Units 1 and 2.

PG&E is a wholly owned subsidiary of PG&E Corporation.

1.1.2 Address of Applicant

The principal executive offices of PG&E are located at 77 Beale Street, P.O. Box 770000, San Francisco, California, 94177.

1.1.3 Description of Business or Occupation of Applicant

PG&E is a public utility operating in northern and central California. PG&E engages primarily in the businesses of electricity and natural gas distribution, electricity generation, procurement and transmission, and natural gas procurement, transportation and storage.

PG&E Corporation was incorporated in 1995 and became the holding company for PG&E and its subsidiaries on January 1, 1997. PG&E Corporation is headquartered in San Francisco, California. PG&E Corporation is an energy-based holding company that conducts its business principally through PG&E.

1.1.4 Description of Organization and Management of Applicant

Neither PG&E nor PG&E Corporation is owned, controlled, or dominated by an alien, a foreign corporation, or a foreign government. PG&E is not acting as an agent or representative of any other person.

The principal directors and officers of PG&E Corporation and PG&E and their addresses are presented below. All persons listed are U. S. citizens.

PG&E Corporation and PG&E Board of Directors	
Name	**Address**
Peter A. Darbee, Chairman	77 Beale St., P.O. Box 770000, San Francisco, CA 94177
David R. Andrews	77 Beale St., P.O. Box 770000, San Francisco, CA 94177
C. Lee Cox	77 Beale St., P.O. Box 770000, San Francisco, CA 94177
Maryellen C. Herringer	77 Beale St., P.O. Box 770000, San Francisco, CA 94177
Roger H. Kimmel	77 Beale St., P.O Box 770000, San Francisco, CA 94177
Richard A. Meserve	77 Beale St., P.O Box 770000, San Francisco, CA 94177
Mary S. Metz	77 Beale St., P.O. Box 770000, San Francisco, CA 94177

PG&E Corporation and PG&E Board of Directors	
Name	**Address**
Forest E. Miller	77 Beale St., P.O. Box 770000, San Francisco, CA 94177
Barbara L. Rambo	77 Beale St., P.O. Box 770000, San Francisco, CA 94177
Barry Lawson Williams	77 Beale St., P.O. Box 770000, San Francisco, CA 94177

PG&E Corporation Principal Officers		
Name	**Title**	**Address**
Peter A. Darbee	Chairman of the Board Chief Executive Officer and President	77 Beale St. P.O. Box 770000 San Francisco, CA 94177
Kent M. Harvey	Senior Vice President, Chief Financial Officer	77 Beale St. P.O. Box 770000 San Francisco, CA 94177
Nancy E. McFadden	Senior Vice President, Public Affairs	77 Beale St. P.O. Box 770000 San Francisco, CA 94177
Hyun Park	Senior Vice President, General Counsel	77 Beale St. P.O. Box 770000 San Francisco, CA 94177
Greg S. Pruett	Senior Vice President, Corporate Relations	77 Beale St. P.O. Box 770000 San Francisco, CA 94177
Rand R. Rosenberg	Senior Vice President, Corporate Strategy and Development	77 Beale St. P.O. Box 770000 San Francisco, CA 94177
John R. Simon	Senior Vice President, Human Resources	77 Beale St. P.O. Box 770000 San Francisco, CA 94177

PG&E Principal Officers		
Name	**Title**	**Address**
Peter A. Darbee	President and Chief Executive Officer	77 Beale St. P.O. Box 770000 San Francisco, CA 94177
Christopher P. Johns	President	77 Beale St. P.O. Box 770000 San Francisco, CA 94177
Des Bell	Senior Vice President, Shared Services and Chief Procurement Officer	77 Beale St. P.O. Box 770000 San Francisco, CA 94177
Thomas E. Bottorff	Senior Vice President, Regulatory Relations	77 Beale St. P.O. Box 770000 San Francisco, CA 94177
Helen Burt	Senior Vice President, Chief Customer Officer	77 Beale St. P.O. Box 770000 San Francisco, CA 94177
John T. Conway	Senior Vice President, Generation and Chief Nuclear Officer	77 Beale St. P.O. Box 770000 San Francisco, CA 94177
Pat Lawicki	Senior Vice President, Chief Information Officer	77 Beale St. P.O. Box 770000 San Francisco, CA 94177
Nancy E. McFadden	Senior Vice President, Public Affairs	77 Beale St. P.O. Box 770000 San Francisco, CA 94177
Greg S. Pruett	Senior Vice President, Corporate Relations	77 Beale St. P.O. Box 770000 San Francisco, CA 94177
Edward A. Salas	Senior Vice President, Engineering and Operations	77 Beale St. P.O. Box 770000 San Francisco, CA 94177

PG&E Principal Officers		
Name	**Title**	**Address**
John R. Simon	Senior Vice President Human Resources	77 Beale St. P.O. Box 770000 San Francisco, CA 94177
Fong Wan	Senior Vice President Energy Procurement	77 Beale St. P. O. Box 770000 San Francisco, CA 94177
Geisha J. Williams	Senior Vice President Energy Delivery	77 Beale St. P.O. Box 770000 San Francisco, CA 94177

1.1.5 Class of License, Use of the Facility, and Period of Time for Which the License Is Sought

PG&E requests renewal of the Class 104(b) operating licenses for DCPP, Units 1 and 2 (License Nos. DPR-80 and DPR-82) for a period of 20 years beyond the expirations of the current licenses, which are midnight on November 2, 2024 (Unit 1) and August 26, 2025 (Unit 2).

Because the current licensing basis (CLB) is carried forward with the possible exception of some aging issues, PG&E expects the form and content of the license to be generally the same as presently exists. The CLB will be maintained during the period of extended operation. PG&E, thus, requests similar extensions of specific licenses under 10 CFR Parts 30, 40, and 70 that are subsumed or combined in the current operating licenses.

1.1.6 Earliest and Latest Dates for Alterations, If Proposed

No physical plant alterations or modifications have been identified as necessary in order to implement the conditions of the application.

1.1.7 Restricted Data

With regard to the requirements of 10 CFR 54.17(f), this application does not contain any “Restricted Data,” as that term is defined in the Atomic Energy Act of 1954, as

amended, or other defense information, and it is not expected that any such information will become involved in these licensed activities.

In accordance with the requirements of 10 CFR 54.17(g), PG&E will not permit any individual to have access to, or any facility to possess restricted data or classified national security information until the individual and/or facility has been approved for such access under the provisions of 10 CFR Parts 25 and/or 95.

1.1.8 Regulatory Agencies

Regulatory agencies with jurisdiction over rates and services for PG&E are listed below.

Federal Energy Regulatory Commission
888 First Street N.E.
Washington, DC 20426

U.S. Securities and Exchange Commission
100 F Street, NE
Washington, DC 20549

California Public Utilities Commission
505 Van Ness Avenue
San Francisco, CA 94102

1.1.9 Local News Publications

News publications in circulation near the plant that are considered appropriate to give reasonable notice of the application are as follows:

The Tribune
3825 South Higuera St.
P.O. Box 112
San Luis Obispo, CA 93406-0112

1.1.10 Conforming Changes to Standard Indemnity Agreement

10 CFR 54.19(b) requires that each license renewal “each application must include conforming changes to the standard indemnity agreement, 10 CFR 140.92, Appendix B, to account for the expiration term of the proposed renewed license.” Indemnity Agreement No. B-75 states in Article VII that the agreement shall

terminate at the time of expiration of that license specified in Item 3 of the attachment. Amendment No. 7 to Indemnity Agreement No. B-75 was issued as part of the Unit 1 full power license DPR-80 on November 2, 1984. Amendment No. 8 to Indemnity Agreement No. B-75 was issued as part of the Unit 2 full power license DPR-82 on April 25, 1985. Neither of these amendments had an expiration date specified in Item 3. Therefore no conforming changes to the indemnity agreement are deemed necessary as part of this application. Should the license numbers be changed by the NRC upon issuance of the renewed license, PG&E requests that NRC amend the indemnity agreement to include conforming changes to Item 3 of the attachment and other affected sections of the agreement.

1.2 GENERAL LICENSE INFORMATION

1.2.1 Application Updates, Renewed Licenses, and Renewal Term Operation

In accordance with 10 CFR 54.21(b), during NRC review of this application, an annual update to the application to reflect any change to the current licensing basis that materially affects the contents of the license renewal application will be provided.

In accordance with 10 CFR 54.21(d), PG&E will maintain a summary list in the DCPP Final Safety Analysis Report Update (FSAR) of activities that are required to manage the effects of aging for the systems, structures or components in the scope of license renewal during the period of extended operation and summaries of the time-limited aging analysis evaluations.

1.2.2 Incorporation by Reference

There are no documents incorporated by reference as part of the application. Any document references, either in text or in Section 1.6 are listed for information only.

1.2.3 Contact Information

Any notices, questions, or correspondence in connection with this filing should be directed to:

John Conway
Senior Vice President
Generation and Chief Nuclear Officer
77 Beale Street, MC B32
San Francisco, CA 94105

with copies to:

Terence L. Grebel
Manager, Regulatory Projects
Diablo Canyon Power Plant
P.O. Box 56
Avila Beach, CA 93424

Jennifer Post
Pacific Gas and Electric
Law Department
77 Beale Street, MC B30A
San Francisco, CA 94105

1.3 DESCRIPTION OF THE PLANT

The DCPP site consists of approximately 750 acres located in San Luis Obispo County, California, adjacent to the Pacific Ocean and roughly equidistant from San Francisco and Los Angeles.

Both DCPP Units employ a four-loop pressurized water reactor nuclear steam supply system furnished by Westinghouse Electric Corporation. The balance of each Unit was designed and constructed by PG&E with the assistance of Bechtel.

PG&E is authorized to operate Units 1 and 2 of the Diablo Canyon Power Plant, each at the licensed reactor core power level of 3,411 MW_t (100 percent rated power).

The plant incorporates two similar PWR nuclear power units, each consisting of an NSSS, turbine-generator, auxiliary equipment, controls, and instrumentation. Principal structures include the containment structures, turbine building, and auxiliary building (which includes the control room, the fuel handling areas, and the ventilation areas).

The NSSS for each Unit is contained within a steel-lined reinforced concrete structure.

1.4 APPLICATION STRUCTURE

This license renewal application is structured in accordance with Regulatory Guide 1.188, *Standard Format and Content for Applications to Renew Nuclear Power Plant Operating Licenses*, and NEI 95-10, *Industry Guideline for Implementing the Requirements of 10 CFR Part 54 - The License Renewal Rule*, Revision 6. In addition, Chapter 3, Aging Management Review Results and Appendix B, Aging Management Programs, are structured to address the guidance provided in NUREG-1800, *Standard Review Plan for the Review of License Renewal Applications for Nuclear Power Plants*. NUREG-1800 references NUREG-1801, *Generic Aging Lessons Learned (GALL) Report*. NUREG-1801 was used to determine the adequacy of existing aging management programs and to identify existing programs that will be augmented for license renewal. The results of the aging management review, using NUREG-1801, have been documented and are illustrated in table format in Chapter 3, Aging Management Review Results, of this application.

DCPP Units 1 and 2 are constructed of similar materials with similar environments. Unless otherwise noted throughout this application, plant systems and structures discussed in this application apply to both Units.

The application is divided into the following chapters:

Chapter 1 – Administrative Information

This chapter provides the administrative information required by 10 CFR 54.17 and 10 CFR 54.19. It describes the plant and states the purpose for this application. Included in this chapter are the names, addresses, business descriptions, and organization and management descriptions of the applicant, as well as other administrative information. This chapter also provides an overview of the structure of the application, and a listing of acronyms and general references used throughout the application.

Chapter 2 – Scoping and Screening Methodology for Identifying Structures and Components Subject to Aging Management Review and Implementation Results

This chapter describes and justifies the methods used in the integrated plant assessment to identify those structures and components subject to an aging management review in accordance with the requirements of 10 CFR 54.21(a)(2). These methods consist of: (1) scoping, which identifies the systems, structures, and

components that are within the scope of 10 CFR 54.4(a), and (2) screening under 10 CFR 54.21(a)(1), which identifies those in-scope structures and components that perform their intended function without moving parts or a change in configuration or properties, and that are not subject to replacement based on a qualified life or specified time period.

Additionally, the scoping results for systems and structures are described in this chapter. Scoping results are presented in Section 2.2, Table 2.2-1, DCPP Scoping Results. Screening results are presented in Sections 2.3, 2.4, and 2.5.

The screening results consist of lists of component types that require aging management review. Brief descriptions of mechanical systems and structures within the scope of license renewal are provided as background information. For each in-scope system and structure, component types requiring an aging management review are identified, associated component intended functions are identified, and appropriate reference to the Chapter 3 Table reference providing the aging management review results is made.

Selected structural and electrical component types, such as component supports and cables, were evaluated as commodities. Under the commodity approach, selected structural and electrical component types were evaluated based upon common environments and materials. For each of these commodities, the component types requiring aging management are presented in Sections 2.4 and 2.5.

Chapter 3 – Aging Management Review Results

10 CFR 54.21(a)(3) requires a demonstration (for screened-in SSCs) that the effects of aging will be adequately managed so that the intended functions will be maintained consistent with the current licensing basis throughout the period of extended operation. Chapter 3 presents the results of the aging management reviews. Chapter 3 is the link between the scoping and screening results provided in Chapter 2 and the aging management programs described in Appendix B.

Aging management review results are presented in tabular form, in a format in accordance with NUREG-1800, *Standard Review Plan for Review of License Renewal Applications for Nuclear Power Plants*. For mechanical systems, aging management review results are provided in Sections 3.1, 3.2, 3.3, and 3.4 for the reactor vessel, internals, and reactor coolant system, engineered safety features, auxiliary systems, and steam and power conversion system. Aging management review results for containment, structures, and component supports are provided in Section 3.5. Aging management review results for electrical and instrumentation and controls are provided in Section 3.6.

Chapter 4 – Time-Limited Aging Analyses

Time-limited aging analyses (TLAAs), as defined by 10 CFR 54.3, are listed in this chapter. Chapter 4 includes each of the TLAAs identified in NUREG-1800 and in plant-specific analyses. This chapter includes a summary of the time-dependent aspects of the analyses. A demonstration is provided to show that: (1) each of the analyses remains valid for the period of extended operation, (2) the analyses have been projected to the end of the period of extended operation, or (3) the effects of aging on the intended function(s) will be adequately managed for the period of extended operation.

Appendix A – Final Safety Analysis Report Supplement

As required by 10 CFR 54.21(d), the FSAR supplement contains a summary of activities credited for managing the effects of aging for the period of extended operation. In addition, summary descriptions and dispositions of time-limited aging analysis evaluations and a summary of license renewal commitments are provided.

Appendix B – Aging Management Programs

Appendix B describes the programs and activities that are credited for managing aging effects for components or structures during the period of extended operation based upon the aging management review results provided in Chapter 3 and the time-limited aging analyses results provided in Chapter 4.

Appendix C – (Optional)

Appendix C is not used.

Appendix D – Technical Specification Changes

This Appendix satisfies the requirements of 10 CFR 54.22 to identify whether any Technical Specification changes or additions are necessary to manage the effects of aging during the period of extended operation. No Technical Specification changes are requested.

Appendix E – Environmental Information

This Appendix satisfies the requirements of 10 CFR 54.23 to provide a supplement to the Environmental Report that complies with the requirements of subpart A of 10 CFR 51 for DCPP.

1.5 ACRONYMS

Acronym	Meaning
AC	Alternating Current
AAC	Alternate AC
ACI	American Concrete Institute
AEC	Atomic Energy Commission
AISC	American Institute of Steel Construction
AISE	Association of Iron and Steel Engineers
AMR	Aging Management Review
ANSI	American National Standards Institute
ART	Adjusted Reference Temperature
ASA	American Standards Associations
ASME	American Society of Mechanical Engineers
ASTM	American Society for Testing Materials
ASW	Auxiliary salt water
ATWS	Anticipated Transient Without Scram
BIT	Boron injection tank
BMI	Bottom mounted instrumentation
BMV	Base metal visual
BTP	Branch Technical Position
BWR	Boiling Water Reactor
CAP	Corrective Action Program
CASS	Cast Austenitic Stainless Steel
CBF	Cycle-based fatigue
CCP	Centrifugal charging pump
CCW	Component cooling water
CCCW	Closed-cycle cooling water

Acronym	Meaning
CEA	Control element assembly
CETNA	Core exit thermocouple nozzle assembly
CFCS	Containment fan cooler system
CFR	Code of Federal Regulations
CISI	Containment Inservice Inspection
CLB	Current Licensing Basis
CMAA	Crane Manufacturers Association of America
COMS	Cold overpressurization mitigation system
CP	Cathodic protection
CRDM	Control rod drive mechanism
CRGT	Control rod guide tube
CRPS	Control room pressurization system
CSS	Containment spray system
CST	Condensate storage tank
CUF	Cumulative Use Factor
CVCS	Chemical and volume control system
CWC	Circulating water conduit
DBA	Design Basis Accident
DBE	Design Basis Event
DC	Direct Current
DCL	Diablo Canyon Letter
DCM	Design Criteria Memoranda
DCPP	Diablo Canyon Power Plant
DDE	Double Design Earthquake
DE	Design Earthquake
DECW	Diesel engine jacket cooling water
DFO	Diesel fuel oil storage and transfer system
DG	Diesel generator

Acronym	Meaning
DSE	Design System Engineer
EAC	Emergency AC
EAF	Environmental-assisted fatigue
ECCS	Emergency Core Cooling System
ECG	Equipment Control Guideline
EDG	Emergency diesel generator
EFPY	Effective Full Power Year
EOC	End-of-cycle
EOCI	Electric Overhead Crane Institute
EOLE	End-of-license-extended
EPRI	Electric Power Research Institute
EQ	Environmental Qualification
ESF	Engineered Safety Features
FAC	Flow-accelerated corrosion
FHB	Fuel handling building
FHS	Fuel handling system
FWSTT	Fire water storage and transfer tank
FSAR	Final Safety Analysis Report Update
GALL	Generic Aging Lessons Learned
GSI	Generic Safety Issue
HAZ	Heat-affected zone
HE	Hosgri earthquake
HELB	High Energy Line Break
HEPA	High-efficiency particulate air
HVAC	Heating, ventilation, and air conditioning
I&C	Instrumentation and controls
IASCC	Irradiation-assisted stress corrosion cracking
IEEE	Institute of Electrical and Electronics Engineers

Acronym	Meaning
IGSCC	Intergranular stress corrosion cracking
INPO	Institute for Nuclear Power Operations
IPA	Integrated Plant Assessment
IPLSS	Interim Post-LOCA sampling system
ISG	Interim Staff Guidance
ISI	Inservice Inspection
LBB	Leak-before-break
LCP	Lower core plate
LOCA	Loss of Coolant Accident
LRA	License Renewal Application
LRS	Liquid radwaste system
LTOP	Low-temperature overpressure protection
LTW	Long-term weight
MEB	Metal enclosed bus
MIC	Microbiologically influenced corrosion
MNSA	Mechanical nozzle seal assembly
MSIP	Mechanical stress improvement process
MSIV	Main steam isolation valve
MSLB	Main Steam Line Break
MWe	Megawatt electric
MWS	Makeup water system
MWt	Megawatt thermal
NACE	National Association of Corrosion Engineers
NDE	Nondestructive examination
NEI	Nuclear Energy Institute
NFPA	National Fire Protection Association
NPS	Nominal pipe size
NRC	Nuclear Regulatory Commission

Acronym	Meaning
NSOC	Nuclear Safety Oversight Committee
NSSS	Nuclear Steam Supply System
OCCW	Open-cycle cooling water
OE	Operating experience
OEM	Original Equipment Manufacturer
OOS	Out of specification
OTI	One-time inspection
OVID	Operating Valve Identification Diagram
PASS	Post-accident sampling system
PG&E	Pacific Gas and Electric Company
PI	Project Instruction
PORV	Pressure operated relief valve
P-T	Pressure-temperature
PTLR	Pressure Temperature Limits Report
PTS	Pressurized Thermal Shock
PWSCC	Primary water stress corrosion cracking
PVC	Polyvinyl chloride
PWR	Pressurized Water Reactor
PZR	Pressurizer
QA	Quality Assurance
RCCA	Rod cluster control assembly
RCL	Reactor coolant loop
RCP	Reactor coolant pump
RCPB	Reactor coolant pressure boundary
RCS	Reactor coolant system
RG	Regulatory Guide
RHR	Residual heat removal
RI-ISI	Risk-Informed Inservice Inspection

Acronym	Meaning
RIS	Regulatory Information Summary
RPV	Reactor pressure vessel
RRVCH	Replacement reactor vessel closure head
RSG	Replacement steam generator
RV	Reactor Vessel
RVI	Reactor vessel and internals
RWP	Refueling water purification
RWST	Refueling water storage tank
SAS	Spray additive system
SBO	Station Blackout
SCC	Stress corrosion cracking
SCW	Service cooling water
SE	Safety Evaluation
SER	Safety Evaluation Report
SFP	Spent fuel pool
SG	Steam generator
SI	Safety injection
SISI	Seismically Induced System Interaction
SMP	Structural Monitoring Program
SOV	Solenoid operated valve
SRP	Standard Review Plan
SRRF	Stress range reduction factor
SRS	Solid radwaste system
SS	Stainless steel
SSC	Systems, structures, and components
SSER	Supplemental - Safety Evaluation Report
STW	Short-term weight
TLAA	Time-Limited Aging Analyses

Acronym	Meaning
TOC	Total organic carbon
TS	Technical Specifications
TSC	Technical Support Center
UCP	Upper core plate
USE	Upper-shelf energy
UT	Ultrasonic testing
WCAP	Westinghouse Commercial Atomic Power
WPC	Wear particle concentration

1.6 GENERAL REFERENCES

1. 10 CFR 54, *Requirements for Renewal of Operating Licenses for Nuclear Power Plants*.

2. NEI 95-10, *Industry Guideline for Implementing the Requirements of 10 CFR Part 54 - The License Renewal Rule*, Revision 6.

3. Regulatory Guide 1.188, *Standard Format and Content for Applications to Renew Nuclear Power Plant Operating Licenses*, Revision 1, September 2005.

4. NUREG-1800, *Standard Review Plan for Review of License Renewal Applications for Nuclear Power Plants*, United States Nuclear Regulatory Commission, Revision 1 – September 2005.

5. NUREG-1801, *Generic Aging Lessons Learned (GALL) Report*, United States Nuclear Regulatory Commission, Revision 1 – September 2005.

6. 10 CFR 50.48, *Fire Protection*.

7. 10 CFR 50.49, *Environmental Qualification of Electric Equipment Important to Safety for Nuclear Power Plants*.

8. 10 CFR 50.62, *Requirements for Reduction of Risk from Anticipated Transients Without Scram (ATWS) Events for Light-Water-Cooled Nuclear Power Plants*.

9. 10 CFR 50.61, *Pressurized Thermal Shock.*

10. 10 CFR 50.63, *Loss of All Alternating Current Power*.

11. 10 CFR 50.65, *Requirements for Monitoring the Effectiveness of Maintenance at Nuclear Power Plants*.

12. 10 CFR 50, Appendix B, *Quality Assurance Criteria for Nuclear Power Plants and Fuel Reprocessing Plants*.

13. 10 CFR 51, *Environmental Protection Regulations for Domestic Licensing and Related Regulatory Functions*.

CHAPTER 2

SCOPING AND SCREENING METHODOLOGY FOR IDENTIFYING STRUCTURES AND COMPONENTS SUBJECT TO AGING MANAGEMENT REVIEW AND IMPLEMENTATION RESULTS

2.0 SCOPING AND SCREENING METHODOLOGY FOR IDENTIFYING STRUCTURES AND COMPONENTS SUBJECT TO AGING MANAGEMENT REVIEW AND IMPLEMENTATION RESULTS

Chapter 2 provides the following information that is required by 10 CFR Part 54, *The License Renewal Rule*, Regulatory Guide 1.188, *Standard Format and Content for Applications to Renew Nuclear Power Plant Operating Licenses* and NUREG-1800, *Standard Review Plan (SRP) for Review of License Renewal Applications for Nuclear Power Plants*:

- Scoping and Screening Methodology (Section 2.1)
- Plant-Level Scoping Results (Section 2.2)
- Scoping and Screening Results: Mechanical Systems (Section 2.3)
- Scoping and Screening Results: Structures (Section 2.4)
- Scoping and Screening Results: Electrical and Instrumentation and Controls Systems (Section 2.5)

2.1 SCOPING AND SCREENING METHODOLOGY

The scope of plant systems, structures and components (SSCs) subject to license renewal is defined in 10 CFR 54.4(a). For SSCs within the scope of license renewal, 10 CFR 54.21(a)(1) requires the license renewal applicant to perform an integrated plant assessment (IPA) to identify and list the structures and components subject to an aging management review (AMR).
10 CFR 54.21(a)(2) further requires that the methods used to implement the requirements of 10 CFR 54.21(a)(1) be described and justified.

This section of the application provides a description of the methodology, and bases therefore, used to identify and list structures and components at DCPP that are within the scope of license renewal and subject to an AMR.

DCPP Unit 1 and Unit 2 are constructed of similar materials with similar environments. Therefore the system and component information presented typically applies to both units. However, design differences exist between Unit 1 and Unit 2. Those design differences that impact aging management for each unit are identified.

2.1.1 Introduction

The first step in the integrated plant assessment (IPA) process identified the plant SSCs within the scope of 10 CFR 54. This step is called scoping. For those SSCs identified to be within the scope of the license renewal rule, the second step of the IPA process then identified and listed the structures and components that are subject to an AMR. This step of the process is called screening.

The scoping and screening steps have been performed consistent with the requirements of 10 CFR 54, the Statements of Consideration supporting the license renewal rule, and the guidance provided in NEI 95-10, *Industry Guideline for Implementing the Requirements of 10 CFR Part 54 - The License Renewal Rule*. Section 2.1.1.1 provides a discussion of the documentation used to perform scoping and screening.

Section 2.1.2 discusses the application of the 10 CFR 54.4(a) scoping criteria. Section 2.1.3 describes the scoping methodology. Section 2.1.4 describes the screening methodology. The NRC staff's license renewal interim staff guidance (ISG) documents were considered as described in Section 2.1.5. Section 2.1.6 describes the evaluation of NRC Generic Safety Issues (GSI), and Section 2.1.7 provides conclusions.

An overview of the Scoping and Screening Process is presented in Figure 2.1-1, Scoping and Screening Process Flow.

2.1.1.1 Documentation Sources Used for Scoping and Screening

Various documentation sources were used during the scoping and screening process. These documentation sources are listed below and described in the following sections.

- Current licensing basis (CLB) documents
- Engineering drawings
- Technical position papers
- Plant equipment database
- Q-List

2.1.1.1.1 Current Licensing Basis Documents

The CLB is defined in 10 CFR 54.3. A variety of CLB documents were used to confirm or to determine additional SSC functions and evaluate them against the criteria of 10 CFR 54.4(a). These document types are:

- DCPP Final Safety Analysis Report (FSAR) used as a source of CLB information for the plant.
- Safety Evaluation Reports (SERs), which reflect the NRC Staff evaluation of plant SSC functional requirements, performance characteristics, and related regulatory commitments. SERs were reviewed, as needed, to obtain information relevant to scoping and screening.
- Technical specifications, which provide safety limits, limiting conditions for operation, and surveillance requirements applicable to plant SSCs whose functions are critical to nuclear safety. Technical specification bases provide discussions of SSC functional characteristics that underlie the limits and requirements. The technical specification requirements and bases were reviewed to obtain additional information supporting the functional evaluation of SSCs.
- Licensing correspondence, which reflect DCPP commitments related to various DCPP SSCs and programs.

2.1.1.1.2 Engineering Drawings

Engineering drawings that provide layout and configuration details were reviewed for systems and structures. This included electrical, mechanical, and structural drawings. Use of engineering drawings is discussed in Sections 2.1.3.1, 2.1.3.2, and 2.1.3.3.

2.1.1.1.3 Technical Position Papers

The CLB was reviewed and technical position papers were prepared to use as guidance as part of the preparation for the license renewal application to support scoping evaluations.

The following license renewal position papers relating to scoping and screening methodology were prepared and are discussed further in Section 2.1.2.2 and Section 2.1.2.3:

- Anticipated Transients Without Scram (ATWS) License Renewal Position Paper
- Station Blackout (SBO) License Renewal Position Paper
- Fire Protection License Renewal Position Paper

- Environmental Qualification (EQ) License Renewal Position Paper
- Pressurized Thermal Shock (PTS) License Renewal Position Paper
- Criterion (a)(2) - License Renewal Position Paper
- Electrical/I&C Plant Spaces Approach License Renewal Position Paper
- Plant Systems and Aging Management Programs
- Thermal Insulation License Renewal Position Paper
- Design Basis Events Position Paper

2.1.1.1.4 Plant Equipment Database

DCPP maintains a 10 CFR 50 Appendix B controlled plant equipment database that contains the source data for the license renewal database used to document the results of the IPA. The plant equipment database provides the design and quality classification for each component.

2.1.1.1.5 Q-List

DCPP also maintains a Q-List for *Classification of Structures, Systems and Components for Diablo Canyon Power Plant Units 1 and 2*. The Q-List was used to verify the design and quality class of SSCs.

2.1.2 Scoping Criteria

SSCs that satisfy the criteria in 10 CFR 54.4(a)(1), (a)(2) or (a)(3) are within the scope of license renewal. Specifically, 10 CFR 54.4 states:

> *(a) Plant systems, structures, and components within the scope of this part are-*
>
> > *(1) Safety-related systems, structures, and components which are those relied upon to remain functional during and following design-basis events (as defined in 10 CFR 50.49(b)(1)) to ensure the following functions-*
> >
> > > *(i) The integrity of the reactor coolant pressure boundary;*

(ii) The capability to shut down the reactor and maintain it in a safe shutdown condition; or

(iii) The capability to prevent or mitigate the consequences of accidents which could result in potential offsite exposures comparable to those referred to in §50.34(a)(1), §50.67(b)(2), or §100.11 of this chapter, as applicable.

(2) All nonsafety-related systems, structures, and components whose failure could prevent satisfactory accomplishment of any of the functions identified in paragraphs (a)(1) (i), (ii), or (iii) of this section.

(3) All systems, structures, and components relied on in safety analyses or plant evaluations to perform a function that demonstrates compliance with the Commission's regulations for fire protection (10 CFR 50.48), environmental qualification (10 CFR 50.49), pressurized thermal shock (10 CFR 50.61), anticipated transients without scram (10 CFR 50.62), and station blackout (10 CFR 50.63).

(b) The intended functions that these systems, structures, and components must be shown to fulfill in §54.21 are those functions that are the bases for including them within the scope of license renewal as specified in paragraphs (a)(1) – (3) of this section.

The application of each of these criteria to plant SSCs is discussed in Section 2.1.2.1, Section 2.1.2.2, and Section 2.1.2.3, respectively.

2.1.2.1 Title 10 CFR 54.4(a)(1) – Safety-related

10 CFR 54.4(a)(1) requires that plant SSCs within the scope of license renewal include safety-related SSCs which are those relied upon to remain functional during and following design-basis events (as defined in 10 CFR 50.49(b)(1)) to ensure the following functions:

(i) The integrity of the reactor coolant pressure boundary;

(ii) The capability to shutdown the reactor and maintain it in a safe shutdown condition; or,

(iii) The capability to prevent or mitigate the consequences of accidents which could result in potential offsite exposure comparable to those referred to in 50.34(a)(1), 50.67(b)(2), or 100.11, as applicable.

DCPP Design and Quality Group Classifications

Design and quality group classifications for SSCs are described in the FSAR, the Q-List or in design basis documents such as engineering drawings, evaluations, or calculations. The design and quality classifications for individual components are documented on engineering drawings and the Q-List and are documented in the plant equipment database.

PG&E established its own design criteria and classification requirements for SSCs used in the DCPP because industry and regulatory standards were not yet developed. It is recognized that during the design and construction of DCPP Units 1 and 2, significant industry and regulatory progress was made in establishing common and agreed upon methods of classification. The newer methods of classification all differ slightly in detail from those for DCPP, but the form and intent of all are equivalent. The FSAR provides a description and definitions of the classifications for SSCs based on Design Class, Seismic Category, and Quality Assurance Classifications.

DCPP specific definitions for design and quality classifications in the FSAR, Q-List, and maintenance rule program are not inconsistent with the definition of safety-related provided in 10 CFR 54.4(a)(1). The following terms and classification designations are used in DCPP procedures, Q-List, and CLB documents.

- Safety-Related - Those SSCs that are to remain functional during and after a design basis event to ensure reactor coolant pressure boundary integrity, capability to shutdown the reactor and maintain it in safe shutdown conditions, or capability to prevent or mitigate the consequences of accidents comparable to 10 CFR Part 100 guidelines.
- Design Class I - Plant features important to safety, including plant features required to assure: (1) the integrity of the reactor coolant pressure boundary, (2) the capability to shut down the reactor and maintain it in a safe shutdown condition, or (3) the capability to prevent or mitigate the consequences of accidents which could result in potential offsite exposures comparable to the guideline exposures of 10 CFR 100. With respect to instrumentation, only those instruments designated as Design Class 1A, 1B, or 1C and Quality Group Q are considered safety-related.

- QA Class 'Q' - Equipment and structures to which the QA provisions of Appendix B to 10 CFR 50 apply for design, procurement, and construction. All SSCs designated as 'Q' are also Design Class I.

For the purposes of scoping and screening, all SSCs identified as Design Class I, safety-related, or QA Class 'Q' have been used to identify SSCs satisfying one or more of the criteria of 10 CFR 54.4(a)(1) and included within the scope of license renewal.

FSAR Section 3.2.1 states that plant features important to safety are those necessary to ensure (1) the integrity of the reactor coolant pressure boundary, (2) the capability to shut down the reactor and maintain it in a safe shutdown condition, or (3) the capability to prevent or mitigate the consequences of accidents that could result in potential offsite exposures comparable to the guideline exposures of 10 CFR 100.

Design Basis Events

The FSAR and procedures governing safety-related and important to safety design classifications refer to “design basis events (DBEs)” while 10 CFR 54.4(a)(1) is more specific referring to design basis events as defined in 10 CFR 50.49(b)(1). DBEs are defined in 10 CFR 50.49(b)(1) as conditions of normal operation, including anticipated operational occurrences, design basis accidents (DBAs), external events, and natural phenomena for which the plant must be designed to ensure the functions based on 10 CFR 54.4(a)(1). As part of the scoping methodology, a position paper was prepared to confirm that all applicable design basis events were considered. The FSAR identifies the DCPP DBEs.

DCPP conducted a search for DBEs to be considered during the scoping process. FSAR Chapters 6 and 15 are the main source of the DBEs. Non-Chapter 15 events included natural phenomena and external events described in FSAR Chapter 2, and design basis events, natural phenomena, and external events associated with the design of structures in FSAR Chapter 3. DBEs were also identified within other FSAR chapters. The FSAR review identified the set of DBEs and confirmed that the DCPP license renewal process had evaluated the associated SSCs consistent with the criteria of the Rule.

Exposure Guidelines

The exposure guidelines used for DCPP license renewal are the same as 10 CFR 54.4 with the exception of the guidelines cited for off-site exposures. In addition to the guidelines of 10 CFR 100, 10 CFR 54.4(a)(1)(iii) references the

dose guidelines of 10 CFR 50.34(a)(1) and 10 CFR 50.67(b)(2). These different exposure guidelines appear in three different Code sections to address similar accident analyses performed by licensees for different reasons. The guidelines of 10 CFR 50.34(a)(1) are applicable to facilities seeking a construction permit and are therefore not applicable to DCPP license renewal. The exposure guidelines of 10 CFR 50.67(b)(2) address the use of alternate source terms. Except for the fuel handling accident analysis, DCPP has not implemented the alternate source term guidelines of 10 CFR 50.67(b)(2). Therefore the guidelines of 10 CFR 50.67(b)(2) are applicable only by exception, through specific license amendments, under the DCPP CLB. A review of the systems and components that are credited in the fuel handling accident analysis was performed to ensure the applicable systems and components were included in the scope of license renewal. Therefore, use of the DCPP safety-related design classification designators are consistent with 10 CFR 54.4(a)(1) scoping criteria.

2.1.2.2 Title 10 CFR 54.4(a)(2) – Nonsafety-Related Affecting Safety-Related

10 CFR 54.4(a)(2) requires that plant SSCs within the scope of license renewal include all nonsafety-related SSCs whose failure could prevent satisfactory accomplishment of any of the functions identified for safety-related SSCs. The guidance provided in NEI 95-10, Appendix F was used to develop the methodology for scoping to the criterion of 10 CFR 54.4(a)(2).

The methodology includes identification of nonsafety-related SSCs that are connected to safety-related SSCs and nonsafety-related SSCs that could spatially interact with safety-related SSCs. Determination and identification of any other SSCs satisfying criterion 10 CFR 54.4(a)(2) was completed as described below based on review of applicable CLB documents, plant specific and industry operating experience, and by system and structure functional evaluations.

Functional Support for Safety-Related SSCs 10 CFR 54.4(a)(1) Functions

The FSAR and other CLB documents were reviewed for every plant system or structure, to determine whether the system or structure was credited with supporting satisfactory accomplishment of a safety-related function. Nonsafety-related systems or structures credited in CLB documents with providing functional or structural support for the accomplishment of a safety-related function were classified as satisfying criterion 10 CFR 54.4(a)(2) and were included within the scope of license renewal.

The DCPP Operating Licenses include a condition to implement the Seismically Induced System Interaction (SISI) Program to ensure that SSCs required for safe shutdown of the plant as well as certain accident mitigating systems will not be impaired from performing their safety function as a result of seismically induced interactions when subjected to a seismic event of severity up to and including the postulated 7.5M Hosgri event. The SISI program identifies both safety-related and nonsafety-related SSCs that are required for safe shutdown of the plant as well and for mitigation of certain accidents. A review of the SISI Program documents was performed to ensure that all such components were included in the scope of license renewal.

Nonsafety-Related SSCs Directly Connected to Safety-Related SSCs

Nonsafety-related SSCs that are directly connected to a safety-related SSC were included within the scope of license renewal to ensure structural integrity of the safety-related SSC up to the first seismic anchor or equivalent anchor past the safety/nonsafety interface. In cases where seismic anchors were not available to serve as the license renewal boundary, the following methods as provided for in NEI 95-10, Appendix F, were utilized to establish the license renewal boundary:

- A base-mounted component (e.g., pump, heat exchanger, tank, etc.) that is a rugged component and is designed not to impose loads on connecting piping was included in scope as it has a support function for the safety-related piping.
- A flexible connection that was considered a pipe stress analysis model end point, when the flexible connection effectively decouples the piping system (i.e., does not support loads or transfer loads across it to connected piping).
- A free end of nonsafety-related piping, such as a drain pipe that ends at an open floor drain.
- A point where buried piping exits the ground. The buried portion of the piping is included in the scope of license renewal.
- Nonsafety-related piping runs that are connected at both ends to safety-related piping include the entire run of nonsafety-related piping.
- A smaller branch line where the moment of inertia ratio of the larger piping to the smaller piping is such that the smaller branch line does

not impose loads on the larger piping and does not support the larger piping.

- A combination of restraints or supports such that the nonsafety-related piping and associated structures and components attached to safety-related piping is included in scope up to a boundary point that encompasses two supports in each of three orthogonal directions.
- A large piece of plant equipment (e.g., a heat exchanger) or a series of supports that have been evaluated as part of a plant-specific design analysis to ensure that forces and moments are restrained in three orthogonal directions.

Nonsafety-Related SSCs with Spatial Interaction with Safety-Related SSCs

Nonsafety-related SSCs which are not connected to safety-related piping and/or which are not required for structural integrity, but have a spatial relationship such that their potential failure could adversely impact the performance of the intended function of a safety-related SSC, were included in the scope of license renewal per NEI 95-10, Appendix F. DCPP applied both the preventative and mitigative options for 10 CFR 54.4(a)(2) scoping.

The preventative option as implemented at DCPP is based on an approach for scoping of nonsafety-related SSCs having potential spatial interaction with safety-related SSCs. Potential spatial interaction is evaluated for any SSC in proximity to active or passive safety-related SSCs. The structures of concern for potential spatial interaction were identified based on the review of the CLB to determine which structures contained safety-related SSCs.

Nonsafety-related systems and components that contain fluid or steam, and are located inside structures that contain safety-related SSCs are included in scope for potential spatial interaction under criterion 10 CFR 54.4(a)(2).

High-energy lines located inside primary containment are included within the scope of license renewal. High-energy lines located outside primary containment are included within the scope of license renewal if their failure could adversely impact any safety-related SSCs.

The potential effects of flooding as a consequence of a pipe break or critical crack were analyzed on a case-by-case basis to ensure that the operability of safety-related equipment would not be impaired. Floor drains and curbs required for flood mitigation are within the scope of license renewal based on 10 CFR 54.4(a)(2). Piping and components containing steam or fluid that are

located in areas with safety-related equipment are included in scope for (a)(2) spatial interactions (regardless of the system pressure).

Welded piping that contains air and gas (non-liquid) is not a hazard to other plant equipment, and has been determined not to have spatial interactions with safety-related SSCs. DCPP and industry operating experience has not identified failures due to aging that have adversely impacted the accomplishment of a safety function. SSCs containing air or gas cannot adversely affect safety-related SSCs due to leakage or spray, since gas systems contain no fluids that could spray or leak onto safety-related systems causing shorts or other malfunctions. Gas systems do not contain sufficient energy to cause pipe whip or jet impingement. The nonsafety-related welded steel piping systems containing air or gas (except portions attached to safety-related SSCs and required for structural integrity) are not included within the scope of license renewal for criterion 10 CFR 54.4(a)(2).

DCPP applied the mitigative option for 10 CFR 54.4(a)(2) scoping of certain SSCs located in the turbine building. The mitigative option was applied to exclude certain SSCs from the 10 CFR 54.4(a)(2) scope where the only potential interaction with a safety-related SSC was fluid spray onto conduit containing safety-related electrical cables. These cables are protected by solid pipe conduit that is in scope as a structural component.

Supports for nonsafety-related SSCs are included in scope to prevent adverse interaction with safety-related SSCs.

2.1.2.3 Title 10 CFR 54.4(a)(3) – Regulated Events

10 CFR 54.4(a)(3) requires that plant SSCs within the scope of license renewal include all SSCs relied on in safety analyses or plant evaluations to perform a function that demonstrates compliance with the regulations for fire protection (10 CFR 50.48), EQ (10 CFR 50.49), PTS (10 CFR 50.61), ATWS (10 CFR 50.62), and SBO (10 CFR 50.63).

Position papers were prepared to provide input to the SSC scoping process. The purpose of these position papers was to evaluate the DCPP CLB relative to the regulated events, identify the systems and structures that are relied upon to demonstrate compliance with each of these regulations, and document the results of this review. Guidance provided by the position papers was used during system and structure scoping to identify system and structure intended functions for Criterion (a)(3), and again during component scoping as necessary to determine which components are credited in the regulated events. SSCs

credited in the regulated events have been classified as satisfying criterion 10 CFR 54.4(a)(3) and have been identified as within the scope of license renewal.

2.1.2.3.1 Fire Protection

Criterion 10 CFR 54.4(a)(3) requires that plant SSCs within the scope of license renewal include all SSCs relied on in safety analyses or plant evaluations to perform a function that demonstrates compliance with the regulations for fire protection (10 CFR 50.48).

The DCPP CLB for fire protection consists of General Design Criterion 3 as set forth in 10 CFR 50 Appendix A, FSAR Appendix 9.5B, Table B-1, *Comparison of DCPP to Appendix A of BTP APCSB 9.5- 1*, 10 CFR 50, Appendix R, licensing conditions 2.C.(5) and 2.C.(4), and Design Criteria Memorandum S-18, *Fire Protection System*. These documents and document sections identify the features required for DCPP to demonstrate compliance with 10 CFR 50.48.

10 CFR 50.48(a) requires that operating nuclear power plants have a fire protection plan that satisfies Criterion 3 of 10 CFR 50, Appendix A. DCPP uses the information in 10 CFR 50.48(b) to determine the acceptable content of the required fire protection plan.

10 CFR 50.48(b) states that Appendix R establishes fire protection features required to satisfy Criterion 3 of 10 CFR 50, Appendix A. 10 CFR 50.48(b), however, allows the use of provisions of Appendix A to BTP APCSB 9.5-1 as an alternative to the requirements of Appendix R provided those provisions have been accepted by the NRC. In addition to the provisions of Appendix A to BTP APCSB 9.5-1, 10 CFR 50.48(b) imposes the provisions of Appendix R Sections III.G, J and O on plants licensed to operate prior to January 1, 1979. DCPP was initially licensed to operate on September 22, 1981 for Unit 1 and April 26, 1985 for Unit 2.

Based on the requirements of 10 CFR 50.48(b), the fire protection plan is based on Appendix R and Appendix A to BTP APCSB 9.5-1. The requirement to comply with the requirements of Appendix R is a result of a commitment stated in the Unit 1 and Unit 2 operating licenses.

The position paper summarizes the results of a detailed review performed on the fire protection program documents demonstrating compliance with the requirements of 10 CFR 50.48 for the plant. The position paper provides a list of systems and structures credited in the fire protection program documents.

SSCs classified as satisfying criterion 10 CFR 50.48 were identified as within the scope of license renewal.

2.1.2.3.2 Environmental Qualification

Criterion 10 CFR 54.4(a)(3) requires that plant SSCs within the scope of license renewal include all SSCs relied on in safety analyses or plant evaluations to perform a function that demonstrates compliance with the regulations for environmental qualification (10 CFR 50.49).

FSAR Section 3.11 states that 10 CFR 50.49 is the governing regulation for the DCPP EQ program. PG&E has certified its compliance with this regulation as required by NRC Generic Letter 84-24, *Certification of Compliance to 10 CFR 50.49, Environmental Qualification of Electric Equipment Important to Safety for Nuclear Power Plants*.

The scope of the DCPP EQ program is limited to plant areas exposed to harsh environmental conditions following a DBA or during normal operation.

The EQ position paper provides a list of systems that include EQ components.

Components within the scope of the DCPP EQ program which demonstrate compliance with 10 CFR 50.49 and the systems containing those components were classified as satisfying criterion 10 CFR 54.4(a)(3) and were identified as within the scope of license renewal.

2.1.2.3.3 Pressurized Thermal Shock

Criterion 10 CFR 54.4(a)(3) requires that plant SSCs within the scope of license renewal include all SSCs relied on in safety analyses or plant evaluations to perform a function that demonstrates compliance with the regulations for PTS (10 CFR 50.61).

A position paper was developed to review the licensing basis for PTS at DCPP. For DCPP, the only component within the scope of the license renewal rule for pressurized thermal shock is the reactor vessel.

The calculation of nil-ductility transition reference temperature RT_{PTS} is a time-limited aging analysis (TLAA) as defined by 10 CFR 54.3(a) and is addressed separately in Section 4.2.

2.1.2.3.4 Anticipated Transients Without Scram

Criterion 10 CFR 54.4(a)(3) requires that plant SSCs within the scope of license renewal include all SSCs relied upon in safety analyses or plant evaluations to perform a function that demonstrates compliance with the regulations for ATWS (10 CFR 50.62). An ATWS is a postulated operational transient that generates an automatic scram signal accompanied by a failure of the reactor protection system to shutdown the reactor.

The ATWS Rule required improvements in the design to reduce the probability of failure to shutdown the reactor following anticipated transients, and to mitigate the consequences of an ATWS event. Each pressurized water reactor was required to have equipment from sensor output to final actuation device, which is diverse from the reactor trip system, to automatically initiate the auxiliary feedwater system and initiate a turbine trip under conditions indicative of ATWS. This equipment is designed to perform its function in a reliable manner and be independent (from sensor output to the final actuation device) from the existing reactor trip system.

The NRC concluded that the existing plant protection systems were sufficiently reliable to ensure that random component failures or malfunctions would not result in ATWS events. The effects of anticipated transients with failure to trip are not considered in the DCPP design bases. In accordance with the final ATWS rule (10 CFR 50.62), ATWS Mitigation System Actuation Circuitry (AMSAC) is installed at DCPP.

ATWS equipment required by 10 CFR 50.62 and addressed by the Westinghouse Owner’s Group ATWS Licensing Topical Report is described in FSAR Section 7.6.1.4, ATWS Mitigation System Actuation Circuitry (AMSAC).

ATWS SSCs are within the scope of license renewal as satisfying the criteria of 10 CFR 54.4(a)(3).

2.1.2.3.5 Station Blackout

Criterion 10 CFR 54.4(a)(3) requires that plant SSCs within the scope of license renewal include all SSCs relied on in safety analyses or plant evaluations to perform a function that demonstrates compliance with the regulations for SBO (10 CFR 50.63).

The NRC issued a supplemental safety evaluation report (SSER) in 1992 that concluded that PG&E's revised response to the SBO (10 CFR 50.63) for Units 1 and 2 is acceptable. The DCPP SBO analysis is discussed in

FSAR Section 8.3.1.6. The SBO recovery path is identified on Figure 2.1-2, Station Blackout Recovery Path.

The DCPP SBO analysis was performed using the guidance provided in NUMARC 87-00, Rev. 0 and the coping time (the postulated maximum SBO duration) was determined to be four hours. During an SBO event, the SBO analysis demonstrated that the plant could be safely shutdown utilizing either Buses G or H and their normally connected EDGs (Emergency AC (EAC) sources) and, thereby, the third EDG and its Bus F were declared the Alternate AC (AAC) source. However, during an SBO event, any of the three EDGs may be used as the AAC source. The SBO analysis takes credit for the hydraulic interconnection of the auxiliary saltwater systems between Unit 1 and 2 by manually opening FCV-601.

PG&E has committed to the "10 minute AAC" option, therefore a "coping assessment" is not required.

The 230 kV switchyard provides primary offsite power to each unit through the unit startup transformers 11 and 21. Startup transformers 11 and 21 are connected to the 230 kV switchyard through disconnect 211-1, 211-2 and 213. Disconnect 213 is connected to switchyard buses 1 and 2 via switchyard breaker 212 and disconnects 213, 217 and 219. Switchyard breaker 212 has a bypass disconnect 215 which is also included in the primary recovery path. The startup transformers, the overhead transmission lines, the disconnects, the switchyard breaker and the switchyard breaker control cables and connections are within the scope of license renewal.

The 500 kV switchyard provides backup offsite power to each unit through the unit main transformers 1 and 2 and auxiliary transformers 12 and 22. Unit auxiliary transformer 12 is connected to the Unit 1 main transformer via the Unit 1 isophase bus. The Unit 1 main transformer connects to the 500 kV switchyard through disconnects 533 and 631 via switchyard circuit breakers 532 and 632. Unit auxiliary transformer 22 is connected to the Unit 2 main transformer via the Unit 2 isophase bus. The Unit 2 main transformer connects to the 500 kV switchyard through disconnects 543 and 641 via switchyard circuit breakers 542 and 642. The unit auxiliary transformers, the unit main transformers, the isophase buses, the overhead transmission lines, the disconnects, the switchyard breakers and the switchyard breaker control cables and connections are within the scope of license renewal.

A position paper was created to summarize the results of a review of the SBO documentation for DCPP. The position paper identifies the SSCs credited with

coping and recovering from a SBO. The SSCs identified in the SBO position paper were used in scoping evaluations to identify SSCs that demonstrate compliance with 10 CFR 50.63.

SSCs classified as satisfying criterion 10 CFR 54.4(a)(3) related to SBO were identified as within the scope of license renewal.

2.1.3 Scoping Methodology

Scoping of the DCPP SSCs was performed to the criteria of 10 CFR 54.4(a) to identify those SSCs within the scope of the license renewal rule. The following sections describe the methodology used for scoping. Separate discussions of mechanical system scoping methodology, structures scoping methodology, and electrical and I&C system scoping methodology are provided.

2.1.3.1 Mechanical System Scoping Methodology

A list of mechanical systems was developed using the plant equipment database and system plant numbering procedures and is documented in a technical position paper. These mechanical systems were evaluated to each of the criteria of 10 CFR 54.4(a). The list of mechanical systems and the results of the scoping process are provided in Section 2.2.

For every mechanical system listed in Table 2.2-1, DCPP Scoping Results, the following scoping process was applied.

- Identification of the system purpose and functions
- Comparison of system intended functions against criteria of 10 CFR 54.4(a)(1-3)
- Identification of supporting systems
- Determination of the license renewal boundary
- Creation of license renewal boundary drawings
- Component level scoping
- Document scoping results and references

Identification of the System Purpose and Functions

A description was prepared for each mechanical system that included the purpose and summarized the functions that the system was designed to perform. This summary description was prepared using information obtained from the FSAR system descriptions, CLB documents, design basis documents (including piping schematics), and system operating descriptions. The system scoping summaries included in Section 2.3 provide the system description, system

intended functions, and reference to the license renewal boundary drawings for each mechanical system in the scope of the Rule.

Comparison of System Functions Against 10 CFR 54.4(a)(1-3)

System functions were compared against the criteria of 10 CFR 54.4(a)(1), (a)(2), and (a)(3). The system functions were identified from the information sources previously described. Each of the system functions satisfying the scoping criteria in 10 CFR 54.4(a) was identified as a system intended function. Functions performed by safety-related portions of the evaluated system were identified as satisfying criterion (a)(1) and were classified as system intended functions. Functions performed by nonsafety-related systems or parts of systems that are required to ensure success of a safety-related function were identified as satisfying criterion (a)(2) and classified as system intended functions. Systems and structures that were credited in one of the regulated events were identified as satisfying criterion (a)(3) and classified as system intended functions.

Any system that performed one or more intended functions (i.e. satisfying criterion (a)(1), (a)(2), or (a)(3)) was classified as a system within the scope of the license renewal rule. Those systems for which no functions were identified as satisfying any of the three scoping criteria were classified as systems outside the scope of the Rule. For systems classified as outside the scope of the Rule, no further evaluation was performed, and the system description documented earlier was augmented to state that the system was determined to not be within the scope of the Rule. When a system was determined to be outside the scope of the Rule, all of the components for that system were identified as outside the scope of the Rule and were excluded from further scoping or screening evaluations.

Identification of Supporting Systems

After a system was determined to be in the scope of the Rule for criteria (a)(1) or (a)(3), a review of CLB documentation was performed to identify all of its supporting systems. Each of the supporting systems was then reviewed to determine if its failure could prevent satisfactory accomplishment of any intended functions of the in-scope system. When it was determined that a supporting system was needed to maintain an intended function of the in-scope system, the supporting system was determined to be in scope.

Determination of the License Renewal Boundary

After the system functions were identified, the system boundary was determined and marked–up on Operating Valve Identification Diagrams (OVIDs). All of the components needed for the system to perform its intended functions are included within the license renewal boundary. Mechanical system piping schematics that show the system configuration, including component equipment identification numbers, were used to define the license renewal boundary of a system to support the scoping and screening evaluations of mechanical components. The system scoping summaries included in Section 2.3 provide a description of the license renewal boundary for each mechanical system in the scope of the Rule.

The process to determine the system license renewal boundary required examination of interfaces with other systems. System interfaces were closely evaluated to ensure that all components were included in the boundary of one of the interfacing systems.

Creation of License Renewal Boundary Drawings

License renewal boundary drawings were created for mechanical systems determined to be within the scope of license renewal. The license renewal boundary drawings were created in conjunction with the component scoping. License renewal boundary drawings reflect the portion of the system determined to be within the scope of license renewal. The diagrams were created by highlighting the OVIDs associated with the mechanical system being evaluated. License renewal boundary drawings include: 1) the system boundary and interfaces; 2) the in scope components whose function is required to ensure success of the system intended functions; and 3) the out-of-scope components whose function is not required to ensure success of the system-level intended functions. Nonsafety-related SSCs included in the scope of the rule solely for 10 CFR 54.4(a)(2) are also shown on the license renewal boundary drawings.

Unit 1 and Unit 2 OVIDs were highlighted to show the license renewal boundary. Component level scoping results from the plant equipment database were used together with piping schematics information to confirm each unit's boundaries/interfaces and components within the license renewal boundary. However, instrument detail drawings have not been separately highlighted.

Component Level Scoping

System components are uniquely identified by the combination of plant name, unit, system name, system identification, component descriptions, and component types. Unless otherwise noted, components are evaluated with their respective plant system.

A component was determined to be in scope if that component was needed to fulfill a system intended function meeting the safety-related criteria of 10 CFR 54.4(a)(1), the nonsafety-related affecting safety-related criterion of 10 CFR 54.4(a)(2), and/or if the component was needed to support the criteria of 10 CFR 54.4(a)(3) for regulated events. The results of the component scoping are documented.

The license renewal boundary drawing for each in-scope system was reviewed to identify those components within the system required to support the system intended functions. Not all components on the piping schematics are included in the plant equipment database. Each system OVID and piping schematic was reviewed, and any commodity types indicated on the drawing were reviewed and evaluated.

License renewal documentation includes uniquely identified components that are not shown on the piping schematics or on the license renewal boundary drawings. Each of these components was evaluated individually to determine whether the component supports a safety-related system intended function, meets the criteria of 10 CFR 54.4(a)(2), or is credited for a regulated event. Components meeting one of these three criteria were identified as within the scope of the Rule. Components not meeting any of these three criteria were identified as out of scope.

The component scoping methodology described above was performed for every mechanical component found within an in-scope system. Electrical and instrument and control components within in-scope mechanical systems were included within the scope of license renewal and evaluated as described in Section 2.1.3.3. Instrument and control components with mechanical functions such as flow elements, flow indicators, flow orifices, and sight gauges were evaluated in their respective mechanical systems.

Mechanical system components that were identified as in scope for license renewal were then screened against the criteria of 10 CFR 54.21(a)(1) to determine whether they were subject to an AMR. The screening methodology is discussed in Section 2.1.4.

Document Scoping Results and References

Throughout the scoping process described above, scoping results were documented for each mechanical system. The CLB and design basis documents reviewed in support of the scoping activities were also documented for each system.

2.1.3.2 Structure Scoping Methodology

A list of structures was developed through review of site plot drawings and FSAR descriptions in conjunction with input from site personnel. This list is included in Table 2.2 -1, DCPP Scoping Results. The FSAR was relied upon to identify the safety classifications of structures and structural components. Design Class I structures and structural components were considered safety-related.

The scoping methodology utilized for structures was similar to the mechanical system-level scoping described in Section 2.1.3.1. Structure descriptions were prepared, including the structure purpose and functions. Structure evaluation boundaries were determined, including examination of structure interfaces. Structure functions were evaluated against the criteria of 10 CFR 54.4(a)(1), (a)(2) and (a)(3) and the results of this evaluation were documented. Engineers preparing mechanical and electrical license renewal documents were consulted to ensure that structures and structural components required to support in-scope SSCs were included in the structural scope. A list of references supporting the evaluation of each structure was documented.

Structural Boundary Drawings

Unlike mechanical systems, individual license renewal boundary drawings were not created for structures. However, two license renewal boundary drawings (LR-DCPP-STRUC-512297-01 and LR-DCPP-STRUC-512298-01) were created for structures based on the site plan. The license renewal boundary drawings display all of the structures in relation to one another.

Structural Component Scoping

Although the controlled plant equipment database does include some structural components, it does not include most of the structural components that are evaluated during an AMR. For structures determined to be within the scope of license renewal, structural drawings were reviewed to identify structural elements (such as steel structures, foundations, floors, walls, ceilings, penetrations, stairways or curbs). For in-scope structures, structural components that are required to support the intended functions of the structure were identified and

documented. Some individual structural components fabricated from the same material and exposed to the same environment were evaluated as a generic component, such as "structural steel" to represent all of the carbon steel beams and columns in a given building. For each in-scope structure, all of the structural components were evaluated and a determination was made as to whether the structural component was required to support the intended functions of the structure. Structural components that support the intended functions of the structure were included within the scope of license renewal.

2.1.3.3 Electrical and I&C System Scoping Methodology

A list of electrical and I&C systems was developed and the systems were scoped against the criteria of 10 CFR 54.4(a). The list of electrical and instrument and control systems and the results of the scoping are provided in Table 2.2-1, DCPP Scoping Results.

System Level Scoping

At the system level, the scoping methodology utilized for electrical and instrument and control systems was similar to the mechanical system-level scoping described in Section 2.1.3.1. The FSAR descriptions, database records, CLB documents and design basis documents applicable to the system were reviewed to determine the system safety classification and to identify all of the system functions. System level functions were evaluated against the criteria of 10 CFR 54.4(a)(1), (a)(2) and (a)(3). The supporting systems needed to maintain the in-scope system intended functions were identified and evaluated against the criteria in 10 CFR 54.4(a)(2). The results of the system level scoping along with a list of references supporting the evaluation of each electrical and instrument and control system were documented.

Electrical Boundary Drawings

Unlike mechanical systems, individual license renewal boundary drawings were not created for each electrical and I&C system. A license renewal boundary drawing (LR-DCPP-ELEC-502110) was created from the plant one-line diagram. The plant one-line diagram schematically shows the portions of the AC electrical distribution system, including the SBO recovery path, that are included in the scope of license renewal.

Component Level Scoping

All electrical and I&C components that perform an intended function as described in 10 CFR 54.4 for in-scope systems were included within the scope of license renewal.

The controlled plant equipment database does not list electrical component types such as cable, connections, fuse holders, terminal blocks, high-voltage transmission conductor, connections and insulators, switchyard bus and connections. During scoping the installed electrical components were identified by reviewing documents such as plant drawings and databases. Additionally, industry documents, such as NEI 95-10, provide a list of typical electrical components found in nuclear power plants. These lists were reviewed against engineering information for the plant to determine which electrical component types are installed at DCPP. The electrical component types installed at DCPP but not listed in the plant equipment database were evaluated as generic components for evaluation during component screening.

2.1.4 Screening Methodology

Screening is the process of identifying and listing the structures and components that are subject to an AMR. This section, and the accompanying subsections for mechanical systems, structures, and electrical and instrument and control systems, describes the process used to perform screening for DCPP.

The structures and components categorized as within the scope of license renewal were screened against the criteria of 10 CFR 54.21(a)(1)(i) and (1)(ii) to determine whether they are subject to AMR. The screening methodology utilized is described in this section of the application.

Title 10 CFR 54.21 states that the structures and components subject to an AMR shall encompass those structures and components within the scope of the license renewal rule if they perform an intended function, as described in 10 CFR 54.4, without moving parts or without a change in configuration or properties; and are not subject to replacement based on a qualified life or specified time period. The word “passive” is used in the screening process for all components that perform intended functions without moving parts, or a change in configuration or properties. All components that are not “passive” are known as “active”. The word “long-lived” is used in the screening process for all components that are not subject to replacement based on qualified life or specific time period.

NEI 95-10, Appendix B, *Typical Structure, Component and Commodity Groupings and Active/Passive Determinations for the Integrated Plant Assessment*, provides industry guidance for screening structures and components. The guidance provided in NEI 95-10, Appendix B, has been incorporated into the DCPP license renewal screening process. The screening methodology applied for each category of system and for structures is described in the following paragraphs.

The list of component intended functions utilized in the screening of mechanical, structural, and electrical component types is found in Table 2.1-1, Intended Functions Abbreviations and Definitions.

Table 2.1-1 Intended Functions: Abbreviations and Definitions

Intended Function Abbreviation	Function	Description
AN	Absorb Neutrons	Absorb neutrons
DF	Direct Flow	Provide spray shield, curbs, or mechanical components for directing flow (e.g., safety injection flow to containment sump)
EC	Electrical Continuity	Provide electrical connections to specified sections of an electrical circuit to deliver voltage, current or signals
ES	Expansion/ Separation	Provide for thermal expansion and/or seismic separation
FB	Fire Barrier	Provide rated fire barrier to confine or retard a fire from spreading to or from adjacent areas of the plant
FIL	Filter	Provide filtration
FLB	Flood Barrier	Provide flood protection barrier (internal and external flooding event)
GR	Gaseous Release Path	Provide path for release of filtered and unfiltered gaseous discharge
HLBS	HELB Shielding	Provide shielding against high energy line breaks
HS	Heat Sink	Provide heat sink during SBO or design basis accidents
HT	Heat Transfer	Provide heat transfer
IN	Insulate (electrical)	Insulate and support an electrical conductor

Table 2.1-1 Intended Functions: Abbreviations and Definitions (Continued)

Intended Function Abbreviation	Function	Description
INS	Insulate	Control heat loss
LBS	Leakage Boundary (Spatial)	Nonsafety-related component that maintains mechanical and structural integrity to prevent spatial interactions that could cause failure of safety-related SSCs
MB	Missile Barrier	Provide missile barrier (internally or externally generated)
PB	Pressure Boundary	Provide pressure-retaining boundary so that sufficient flow at adequate pressure is delivered, or provide fission product barrier for containment pressure boundary, or provide containment isolation for fission product retention
PR	Pressure Relief	Provide over-pressure protection
PWR	Pipe Whip Restraint	Provide pipe whip restraint
SH	Shelter, Protection	Provide shelter/protection to safety-related components
SIA	Structural Integrity (attached)	Nonsafety-related component that maintains mechanical and structural integrity to provide structural support to attached safety-related piping and components
SLD	Shielding	Provide shielding against radiation
SP	Spray	Convert fluid into spray
SPB	Structural Pressure Boundary	Provide pressure boundary or essentially leak tight barrier to protect public health and safety in the event of any postulated design basis events
SS	Structural Support	Provide structural and / or functional support to safety-related and/or nonsafety-related components
TH	Throttle	Provide flow restriction

2.1.4.1 Mechanical System Component Screening Methodology

After a mechanical system component was categorized as in scope, the classification as an active or passive component was determined based on evaluation of the component description and type. The active/passive component determinations documented in NEI 95-10, *Appendix B*, provided guidance for this activity. In-scope components that were determined to be passive and long-lived were documented as subject to AMR.

Each component that was identified as subject to an AMR was evaluated to determine its component intended function(s). The component intended function(s) was identified based on an evaluation of the component type and the way(s) in which the component supports the system intended functions. The results of the component screening were documented.

During the screening process, components that were identified as short-lived were eliminated from the AMR process and the basis for the classification as short-lived was documented. Other in-scope passive components were identified as subject to an AMR.

Consumables were considered in the process for determining the structures and components subject to an AMR. Consumables comprise the following four categories: (1) packing, gaskets, component seals, O-rings; (2) structural sealants; (3) oil, grease, and component filters; (4) system filters, fire extinguishers, fire hoses, and air packs. Consumables were considered as short-lived if replaced based on the guidelines of NEI 95-10, Table 4.1-2*, Treatment of Consumables* and NUREG-1800, Table 2.1-3, *Specific Staff Guidance on Screening*.

Thermal insulation was treated as a passive, long-lived component during the scoping and screening process. For systems where it has an intended function, insulation was considered within the scope of license renewal and subject to AMR, and is included as a component type in each appropriate in-scope system.

2.1.4.2 Structural Component Screening Methodology

Structures and structural components typically perform their functions without moving parts and without a change in configuration or properties. When a structure or structural component was determined to be in scope of license renewal by the scoping process described in Section 2.1.3.2, the structure screening methodology classified the component as active or passive. Active components do not require aging management. This is consistent with guidance found in NEI 95-10, *Appendix B*. During the structural screening process, the

intended function(s) of passive structural components were documented. In the structure screening process, an evaluation was made to determine whether in-scope structural components were subject to replacement based on a qualified time period. If an in-scope structural component was determined to be subject to replacement based on a qualified time period, the component was identified as short-lived and was excluded from an AMR. In such a case, the basis for determining that the structural component was short-lived was documented. The list of component intended functions utilized in the screening of structural components is found in Table 2.1-1, Intended Functions Abbreviations and Definitions.

2.1.4.3 Electrical and I&C Component Screening Methodology

The in-scope electrical components were categorized as “active” or “passive” based on the determinations documented in NEI 95-10, *Appendix B*. The screening of electrical and I&C components used the spaces approach which is consistent with the guidance in NEI 95-10. The spaces approach to AMR is based on areas where bounding environmental conditions are identified. The bounding environmental conditions are applied during AMR to evaluate the aging effects on passive electrical component types that are located within the bounding area. Use of the spaces approach for AMR of electrical component types eliminates the need to associate electrical and I&C components with specific systems that are within the scope of license renewal. The passive long-lived electrical and I&C components that perform an intended function without moving parts or without change in configuration or properties were grouped into component types such as cable, connections, fuse holders, terminal blocks, high-voltage transmission conductor, connections and insulators, metal enclosed bus, switchyard bus and connections. Component-level intended function(s) were determined for each in-scope passive electrical component group and documented. The passive in-scope electrical component types were documented as subject to an AMR. A list of the passive in-scope electrical component types subject to aging management is provided in Table 2.5-1, Electrical and I&C Component Groups Requiring Aging Management Review.

2.1.5 Interim Staff Guidance

As lessons are learned during license renewal application reviews, the NRC staff has developed guidance documents to capture new insights or address emerging issues. To document these lessons learned, the staff has developed an ISG process that provides guidance to future license renewal applicants until the emerging issues can be incorporated into the next revision of the license renewal guidance documents. Many of the previous issues have been closed and

incorporated into license renewal guidance documents. Table 2.1-2, NRC Interim Staff Guidance Associated with License Renewal provides the status of open ISGs.

Table 2.1-2 NRC Interim Staff Guidance Associated with License Renewal

Issue Number	Purpose	Discussion Status
LR-ISG-19B	Cracking of nickel-alloy components in the reactor coolant pressure boundary	This LR-ISG is under development. NEI and EPRI Materials Reliability Program (EPRI-MRP) is to develop an augmented inspection program. This ISG will be issued by the NRC following its review of the industry program.
LR-ISG-23	Replacement parts necessary to meet 10 CFR 50.48 (Fire Protection) To provide guidance on how to handle replacement parts for 10 CFR 50.48	The staff has determined LR-ISG-23 is not needed.
LR-ISG-2006-01	Corrosion of the Mark I Steel Containment Drywell Shell	The staff has issued final LR-ISG-2006-01
LR-ISG-2006-02	Staff Guidance on Acceptance Review for Environmental Requirements	The staff has withdrawn proposed LR-ISG-2006-02. Acceptance Review Checklist for Environmental Reports Associated with License Renewal Applications.
LR-ISG-2006-03	Staff Guidance for Preparing Severe Accident Mitigation Alternatives (SAMA) Analyses	The staff has issued LR-ISG-2006-03
LR-ISG-2007-01	Updating the LR-ISG Process to Include References to the Environmental Review Guidance Documents, References for the Recent Publication of Revision 1 of the License Renewal Guidance Documents, and Minor Revisions to Be Consistent with Current Staff Practices	The staff has issued LR-ISG-2007-01.
LR-ISG-2007-02	Changes to Generic Aging Lesson Learned (GALL) Report Aging Management Program (AMP) XI.E6, “Electrical Cable Connections Not Subject to 10 CFR 50.49 Environmental Qualification Requirements”	The staff has issued for public comment LR-ISG–2007-02
LR-ISG-2008-01	Staff Guidance Regarding Station Blackout Rule (10 CFR 50.63) Associated with License Renewal Applications	The staff has withdrawn proposed LR-ISG-2008-01.

The following sections provide a summary discussion of each ISG issue.

2.1.5.1 (LR-ISG-19B) Cracking of nickel-alloy components in the reactor coolant pressure boundary

This LR-ISG is open pending preparation of an augmented inspection program by the industry (i.e., NEI and EPRI). Guidance will be issued by the NRC following its review of the proposed industry program. The DCPP Nickel-Alloy Penetration Nozzles Welded to the Upper Reactor Vessel Closure Heads of the Pressurized Water Reactors Program is addressed in Section B2.1.5. The DCPP Plant-Specific Nickel-Alloy Aging Management Program, which manages the aging effects of the reactor coolant pressure boundary nickel-alloy components is addressed in Section B2.1.37.

2.1.5.2 (LR-ISG-2006-01) Corrosion of the Mark I Steel Containment Drywell Shell

This LR-ISG is only applicable to certain BWRs and not applicable to DCPP.

2.1.5.3 (LR-ISG-2006-02) Staff Guidance on Acceptance Review for Environmental Requirements

This LR-ISG has been withdrawn by the NRC.

2.1.5.4 (LR-ISG-2006-03) Staff Guidance for Preparing Severe Accident Mitigation Alternatives (SAMA) Analyses

This LR-ISG was issued as final and is applicable to DCPP. The DCPP severe accident mitigation alternatives analysis, provided as a part of Appendix E of this application, is consistent with the guidance of NEI 05-01, *Severe Accident Mitigation Alternatives (SAMA) Analysis Guidance Document,* Revision A as discussed in this ISG.

2.1.5.5 (LR-ISG-2007-01) Updating the LR-ISG Process to Include References to the Environmental Review Guidance Documents, References for the Recent Publication of Revision 1 of the License Renewal Guidance Documents, and Minor Revisions to Be Consistent with Current Staff Practices

The staff has issued this ISG to provide guidance on the License Renewal Interim Staff Guidance process.

2.1.5.6 (LR-ISG-2007-02) Changes to Generic Aging Lesson Learned (GALL) Report Aging Management Program (AMP) XI.E6, "Electrical Cable Connections Not Subject to 10 CFR 50.49 Environmental Qualification Requirements

The staff has issued this ISG for public comment. The DCPP Electrical Cable Connections Not Subject to 10 CFR 50.49 Environmental Qualification Requirements program is addressed in Section B2.1.35.

2.1.5.7 (LR-ISG-2008-01) Staff Guidance Regarding Station Blackout Rule (10 CFR 50.63) Associated with License Renewal Applications

The staff has withdrawn this ISG.

2.1.6 Generic Safety Issues

In accordance with the guidance in NEI 95-10 and Appendix A.3 of NUREG-1800, *Standard Review Plan for the Review of License Renewal Applications for Nuclear Power Plants*, review of NRC Generic Safety Issues (GSIs) as part of the license renewal process is required to satisfy a finding per 10 CFR 54.29. GSIs that involve issues related to license renewal aging management reviews or time-limited aging analyses are to be addressed in the LRA. As a result of the review of NUREG-0933, Supplement 32, dated July 2008, the following GSIs have been evaluated for license renewal:

1. GSI-163, Multiple Steam Generator Tube Leakage

This GSI involves the potential multiple steam generator tube leaks during a main steam line break that cannot be isolated. Steam generator tubes are part of the reactor coolant pressure boundary and are the subject of an AMR and TLAA evaluation as documented in Section 3.1 and Chapter 4 respectively. Aging management of steam generator tubes is addressed within the CLB of the plant and will continue to be addressed during the period of extended operation by the DCPP Steam Generator Tube Integrity program discussed in Section B2.1.8.

2. GSI-190, Fatigue Evaluation of Metal Components for 60-year Plant Life

This GSI addresses fatigue life of metal components and was closed by the NRC. However, the NRC concluded that license renewal applicants should address the effects of reactor coolant environment on component fatigue life. Accordingly, the issue of environmental effects on component fatigue life is addressed in Section 4.3 of this application.

3. GSI-191, Assessment of Debris Accumulation on PWR Sump Performance

GSI-191 addresses the potential for blockage of containment sump strainers that filter debris from cooling water supplied to the safety injection and containment spray pumps following a postulated LOCA. The issue is based on containment strainer design and on the identification of new potential sources of debris that may block the sump strainers. PG&E submitted to the NRC a response to Generic Letter (GL) 2004-02 by PG&E Letter DCL-05-014, *90-Day Response to NRC Generic Letter 2004-02, Potential Impact of Debris Blockage on Emergency Recirculation During Design Basis Accidents at Pressurized-Water Reactors*, dated March 4, 2005, PG&E Letter DCL-05-099, *Response to Requested Information Part 2 of NRC Generic Letter 2004-02, Potential Impact of Debris Blockage on Emergency Recirculation During Design Basis Accidents at Pressurized-Water Reactors*, and later supplements. The issues identified in GSI-191 and GL 2004-02 are not aging-related issues. Also, the issues are not related to the 40-year term of the current operating license, and, therefore, are not time-limited aging analyses. The containment sumps and screens are evaluated in Section 2.3.2.1, Safety Injection and Section 2.4.1, Containment Building.

2.1.7 Conclusions

The scoping and screening methodology described above was used for the DCPP IPA to identify SSCs that are within the scope of license renewal and require an AMR. The methods are consistent with the requirements of 10 CFR 54.4 and 10 CFR 54.21(a)(1).

Figure 2.1-1 Scoping and Screening Process Flow

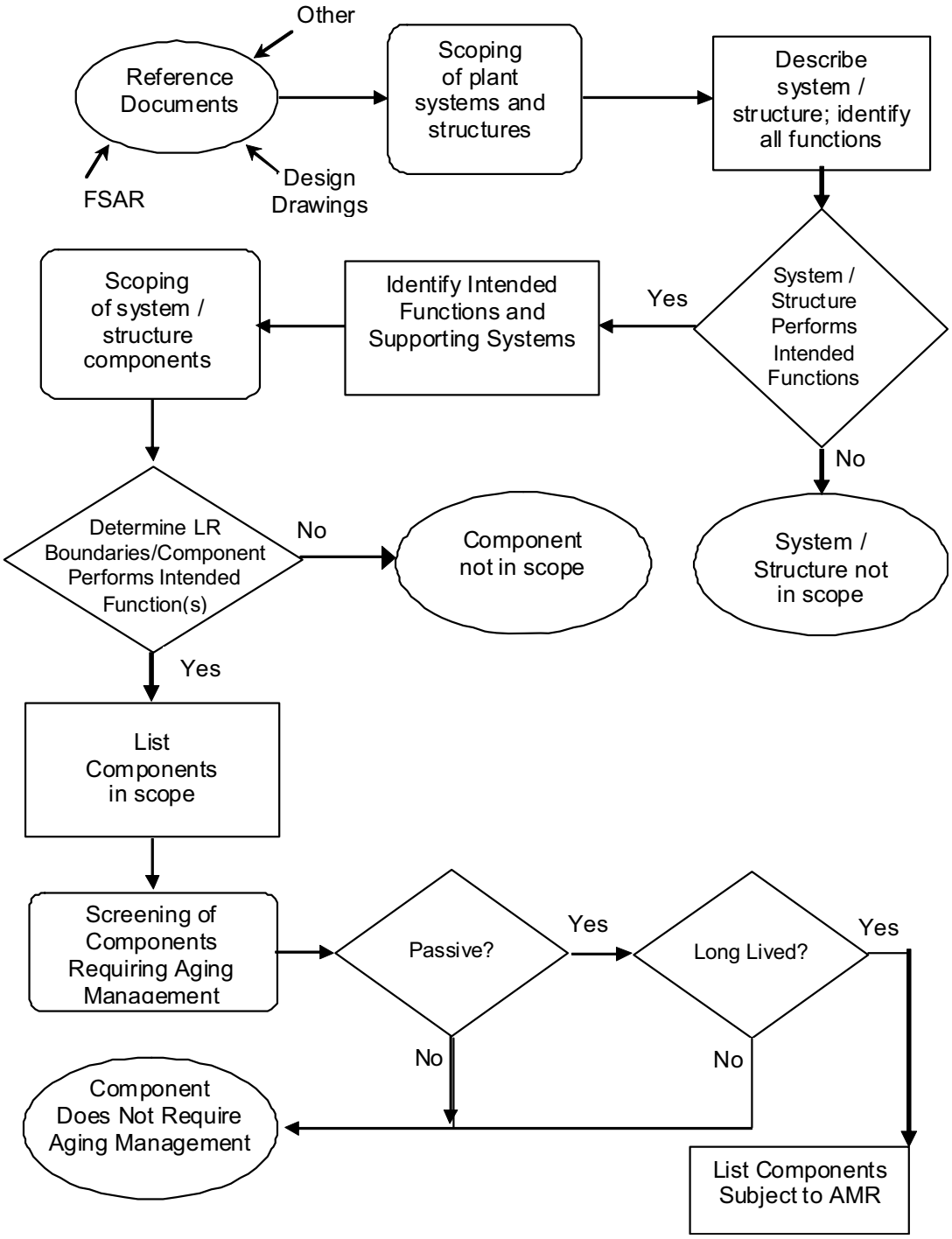

Figure 2.1-2 Station Blackout Recovery Path

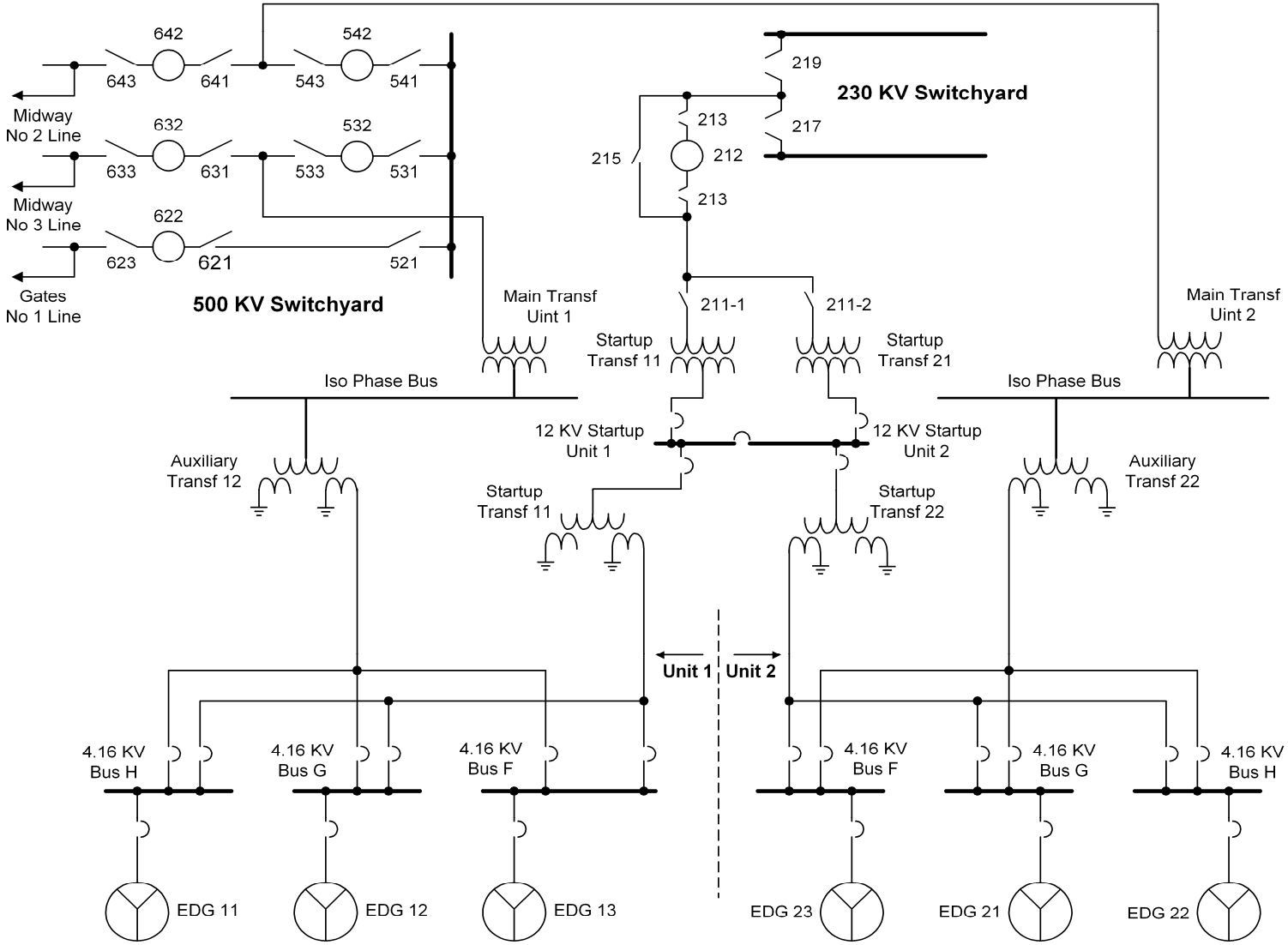

2.2 PLANT-LEVEL SCOPING RESULTS

Table 2.2-1, DCPP Scoping Results provides the results of the assessment to identify the plant systems and structures that are within the scope of license renewal. Table 2.2-1, DCPP Scoping Results lists mechanical, electrical and instrument and control systems and structures. For in-scope mechanical systems and structures, a reference is given to the appropriate section that provides a description and the screening results of the system or structure. For electrical and I&C systems, no description is necessary since these systems were evaluated based on the “spaces approach” as described in Section 2.5.

For each system and structure within the scope of license renewal, components subject to AMR are highlighted on license renewal boundary drawings, as noted in Section 2.1.3, indicating the evaluation boundaries of the systems and structures.

Table 2.2-1 DCPP Scoping Results

System/Structure	In Scope	Section 2 Scoping Results
Reactor Vessel, Internals, and Reactor Coolant System		
Pressurizer	Yes	2.3.1.3
Reactor coolant, includes: RVLIS and RVRLIS	Yes	2.3.1.2
Reactor core, includes: Nuclear Fuel Control Rod Mechanical SSCs	Yes	2.3.1.5
Reactor vessel and internals	Yes	2.3.1.1
Steam generators	Yes	2.3.1.4
Engineered Safety Features		
Containment HVAC, including: Containment H_2 control	Yes	2.3.2.4
Containment spray	Yes	2.3.2.2
Residual heat removal	Yes	2.3.2.3
Safety injection	Yes	2.3.2.1
Auxiliary Systems		
Auxiliary building HVAC, includes: Main auxiliary building HVAC Miscellaneous auxiliary building HVAC Fuel handling building HVAC	Yes	2.3.3.11
Chemical and volume control	Yes	2.3.3.8
Component cooling water	Yes	2.3.3.4
Compressed air, includes: Backup air and N_2 Compressed breathing air	Yes	2.3.3.7
Control Room HVAC, includes: Plant process computer HVAC	Yes	2.3.3.10
Cranes and fuel handling, includes: Fuel handling cranes, hoists, and monorails Nuclear fuel storage	Yes	2.3.3.1
Diesel generator fuel oil	Yes	2.3.3.13

System/Structure	In Scope	Section 2 Scoping Results
Diesel generator	Yes	2.3.3.14
Fire Protection, includes: Fire Detection Firewater system CO_2 system Halon (Sim/Comp Rooms) system Portable fire extinguishers	Yes	2.3.3.12
Gaseous radwaste	Yes	2.3.3.16
Liquid radwaste	Yes	2.3.3.17
Lube Oil	Yes	2.3.3.15
Makeup water, includes Domestic and drinking water	Yes	2.3.3.5
Miscellaneous HVAC, includes: Turbine Building ASW Pump Room Ventilation Radwaste Storage Building	Yes	2.3.3.9
Miscellaneous systems in scope ONLY for criterion 10 CFR 54.4(a)(2), includes:	Yes	2.3.3.18
Radiation monitoring (mechanical)	-	-
Secondary sampling	-	-
Service cooling water	-	-
Solid radwaste	-	-
Nuclear steam supply sampling	Yes	2.3.3.6
Saltwater and chlorination, includes: Saltwater system Auxiliary saltwater Chlorination	Yes	2.3.3.3
Spent fuel pool cooling, includes: Spent fuel pool cooling Spent fuel pool purification	Yes	2.3.3.2
Hazardous waste	No	N/A
Laundry facility and decontamination equipment	No	N/A
Nitrogen and hydrogen	No	N/A
Oily water and turbine sump	No	N/A
Sanitary sewage	No	N/A

System/Structure	In Scope	Section 2 Scoping Results
Steam and Power Conversion System		
Auxiliary feedwater, includes: Long-term cooling water - auxiliary feedwater alternate suction sources	Yes	2.3.4.5
Auxiliary steam	Yes	2.3.4.2
Condensate, includes: Condensate polishing	Yes	2.3.4.4
Feedwater	Yes	2.3.4.3
Turbine steam supply (TSS), includes: TSS –downstream of MSIV TSS –upstream of MSIV TSS –steam generator blowdown	Yes	2.3.4.1
Extraction steam and heater drip	No	N/A
Turbine generator associated systems	No	N/A
Containments, Structures, and Component Supports		
Auxiliary building	Yes	2.4.3
Containment building	Yes	2.4.1
Control room (located in auxiliary building)	Yes	2.4.2
Discharge structure	Yes	2.4.12
Diesel fuel oil pump vaults and structures	Yes	2.4.7
Earthwork and yard structures	Yes	2.4.11
Fuel handling building	Yes	2.4.9
Intake structure and intake control building	Yes	2.4.10
Outdoor water storage tank foundations and encasements	Yes	2.4.13
Pipeway structure	Yes	2.4.6
Radwaste storage facilities	Yes	2.4.5
Supports	Yes	2.4.14
Turbine building, includes: (Emergency diesel generator rooms)	Yes	2.4.4
230 kV Switchyard, 500 kV Switchyard, and electrical foundations and structures	Yes	2.4.8

System/Structure	In Scope	Section 2 Scoping Results
Independent spent fuel storage installation and cask transfer facility	No	N/A
Administration building	No	N/A
Auxiliary boiler enclosure	No	N/A
Avila gate guardhouse	No	N/A
Avila gate storage building	No	N/A
Bechtel administration trailers	No	N/A
Bio-lab shower / Laboratory facility	No	N/A
Biological laboratory and offices	No	N/A
Blast and paint facility	No	N/A
Boat dock	No	N/A
Boat repair shop	No	N/A
Building, auto, and land services trailer	No	N/A
Building mechanic shop	No	N/A
Chemical storage building	No	N/A
Chlorination and domestic water building (not in use)	No	N/A
Clarifier and make-up pretreatment building	No	N/A
Document Control RMS Building	No	N/A
Document storage facilities	No	N/A
Emergency Operations Facility	No	N/A
Employee assistance program office trailer	No	N/A
Energy Information Center	No	N/A
Engineering services trailer	No	N/A
Environmental monitoring program facilities	No	N/A
Firing range	No	N/A
Fitness for duty buildings	No	N/A
Fitness trailer	No	N/A
Fleet mechanic office	No	N/A
Gas cylinder storage	No	N/A
General construction paint compressor building (not in use)	No	N/A

System/Structure	In Scope	Section 2 Scoping Results
General construction paint shack / sand blast facility	No	N/A
Hazardous waste facility	No	N/A
Hazardous material office and warehouse	No	N/A
Housekeeping field office	No	N/A
Intake maintenance shop	No	N/A
Intake office/security access building	No	N/A
Ionics reverse osmosis facility	No	N/A
Laundry facility	No	N/A
Learning center and maintenance shop	No	N/A
Learning center and simulator	No	N/A
Main warehouse	No	N/A
MATCON express trailer	No	N/A
Meteorological Tower No. 1 and building	No	N/A
Meteorological Tower No. 2 and building	No	N/A
NOS project files	No	N/A
Nuclear Quality Services trailer	No	N/A
Oceanography laboratory	No	N/A
Offsite emergency laboratory	No	N/A
Old Steam Generator Storage Facility	No	N/A
Outage services facilities	No	N/A
Plant compressed air facility	No	N/A
Plant security building and structures	No	N/A
Portable fire pump building	No	N/A
Raw water collection facility and wells at Diablo Creek	No	N/A
Radiation protection trailer	No	N/A
Restroom trailers	No	N/A
Scaffold storage building	No	N/A
Security guard station	No	N/A
Service air pad building	No	N/A

System/Structure	In Scope	Section 2 Scoping Results
Sewage treatment plant	No	N/A
Site overlook	No	N/A
Storage building - 500 kV switchyard	No	N/A
Technical maintenance/Telecom/Medical facility	No	N/A
Telecommunications trailer	No	N/A
Telephone terminal building	No	N/A
Turbine generator equipment warehouse	No	N/A
Unit 2 cold machine shop	No	N/A
Utility Crew / Firewatch / Radwaste field office	No	N/A
Vehicle maintenance shop	No	N/A
Vehicle maintenance shop parts office	No	N/A
Vending machine facility	No	N/A
Warehouse A	No	N/A
Warehouse B	No	N/A
Wastewater holding and treatment equipment enclosure	No	N/A
Westinghouse office trailer	No	N/A
Yard Containment Access Facility	No	N/A
Electrical and Instrumentation and Controls		
AMSAC	Yes	N/A
Control rod electrical SSCs	Yes	N/A
Communications	Yes	N/A
Eagle 21	Yes	N/A
Emergency lighting, includes: Emergency AC lighting Emergency DC lighting Battery operated lighting Control room lighting Pipe rack lighting	Yes	N/A
Incore flux mapping	Yes	N/A
Main generator electrical equipment (25 kV)	Yes	N/A
Nuclear instrumentation	Yes	N/A

System/Structure	In Scope	Section 2 Scoping Results
Radiation monitoring	Yes	N/A
Safety parameter display	Yes	N/A
Seismic monitoring, includes: Reactor seismic trip	Yes	N/A
Site emergency and containment evacuation	Yes	N/A
Solid state protection	Yes	N/A
120 VAC	Yes	N/A
125 VDC	Yes	N/A
480 V	Yes	N/A
4.16 kV	Yes	N/A
12 kV	Yes	N/A
230 kV	Yes	N/A
500 kV	Yes	N/A
Auxiliary building control board digital	No	N/A
Boric acid heat trace	No	N/A
Cathodic protection	No	N/A
Digital rod position indication	No	N/A
Loose parts monitoring	No	N/A
Meteorological monitoring	No	N/A
Plant data network	No	N/A
Plant process computer and annunciator	No	N/A
Security	No	N/A
Security UPS	No	N/A
120 V general use and normal lighting	No	N/A

2.3 SCOPING AND SCREENING RESULTS: MECHANICAL SYSTEMS

The scoping and screening results for mechanical systems consist of lists of components and component groups that require AMR, grouped and presented on a system basis. Brief descriptions of mechanical systems within the scope of license renewal are provided as background information. Mechanical system intended functions are provided for in-scope systems. For each in-scope system, components or component groups requiring an AMR are provided.

Specifically, this section provides the results of the scoping and screening process for mechanical systems including:

- A general description of the system, its purpose and system intended function(s),
- A reference to the applicable FSAR section(s),
- A reference to the applicable license renewal boundary drawing(s),
- A listing of mechanical component types that are subject to an AMR with the associated component intended functions.

The mechanical scoping and screening results are provided in four subsections:

- Reactor vessel, internals, and reactor coolant system (Section 2.3.1)
- Engineered safety features (Section 2.3.2)
- Auxiliary systems (Section 2.3.3)
- Steam and power conversion systems (Section 2.3.4)

2.3.1 Reactor Vessel, Internals, and Reactor Coolant System

This section of the application addresses scoping and screening results for the following systems:

- Reactor vessel and internals (Section 2.3.1.1)
- Reactor coolant (Section 2.3.1.2)
- Pressurizer (Section 2.3.1.3)
- Steam generators (Section 2.3.1.4)
- Reactor core (Section 2.3.1.5)

2.3.1.1 Reactor Vessel and Internals

System Description

The reactor vessel is cylindrical and has a welded, hemispherical bottom head and a removable, flanged, hemispherical upper head. The vessel is nozzle supported. The vessel contains the core, core-supporting structures, control rods, and other parts directly associated with the core. The top head also has penetrations for the control rod drive mechanisms (CRDMs) and the head vent pipe. The O-ring leak monitoring tube penetrations are in the vessel flange. The vessel has inlet and outlet nozzles located in a horizontal plane just below the reactor vessel flange but above the top of the core. The bottom head of the vessel contains penetration nozzles for connection and entry of the nuclear incore instrumentation.

The components of the reactor internals consist of the lower core support structure (including the entire core barrel, the thermal shield on Unit 1, and the neutron shield pad assembly on Unit 2), the upper core support structure, and the incore instrumentation support structure. The reactor internals support the core, maintain fuel alignment, limit fuel assembly movement, maintain alignment between fuel assemblies and CRDMs, direct coolant flow past the fuel elements, direct coolant flow to the pressure vessel head, and provide gamma and neutron shielding and guides for incore instrumentation.

The lower core support structure includes the baffle and former plates, core barrel assembly, thermal shield, lower core plates, core support casting, support columns, secondary core support, energy absorbers, tie plates, manway cover, and support ring. The thermal shield is installed in Unit 1 only, while Unit 2 has neutron shield panels. Instead of the core support casting for Unit 1, a core support forging is installed in Unit 2.

The upper core support structure includes the upper support columns, upper support plate, upper core plate, and control rod guide tubes. Unit 2 is featured with head cooling spray nozzles that are holes machined in the upper support plate flange.

The incore instrumentation support structure includes the flux thimble tubes and guide tubes, seal table and fittings, and upper instrumentation columns. Components that provide interfaces between the major assemblies include the radial keys, clevis inserts, fuel alignment pins, head/vessel alignment pins, upper core plate alignment pins, and hold down spring.

System Intended Functions

The reactor vessel contains the core, core support structures, control rods, and other parts directly associated with the core. In addition, the reactor vessel acts as an RCS pressure boundary, acting as a barrier against the release of radioactivity generated within the reactor.

The reactor internals support the core, maintain fuel alignment, limit fuel assembly movement, maintain alignment between fuel assemblies and CRDMs, direct coolant flow past the fuel elements, direct coolant flow to the pressure vessel head, and provide gamma and neutron shielding and guides for incore instrumentation.

Based on the above functions, the reactor vessel and internals are within the scope of license renewal based on the criterion of 10 CFR 54.4(a)(1).

Portions of the system support fire protection, PTS, and SBO requirements and are within the scope of license renewal based on the criteria of 10 CFR 54.4(a)(3).

FSAR References

Additional details of the reactor vessel and internals are included in FSAR Sections 4.1, 4.2.2, 5.1, and 5.4.1.4.

License Renewal Boundary Drawings

There are no license renewal boundary drawings for reactor vessel and internals.

Component-Function Relationship Table

The component types subject to AMR are indicated in Table 2.3.1-1 - Reactor Vessel and Internals.

Table 2.3.1-1 Reactor Vessel and Internals

Component Type	Intended Function
RV Bottom Mounted Instrument Guide Tube	Pressure Boundary
RV Bottom Mounted Instrument Nozzle	Pressure Boundary
RV Closure Head	Pressure Boundary
RV Closure Head Bolts	Pressure Boundary
RV Control Rod Drive Head Penetration	Pressure Boundary
RV Core Support Lugs	Structural Support
RV CRDM Housing	Pressure Boundary
RV Flange Leak Monitoring Tube	Pressure Boundary
RV Head Vent Nozzle	Pressure Boundary
RV Ligaments	Structural Support
RV Nozzle Safe Ends and Welds	Pressure Boundary
RV Nozzle Support Pads	Structural Support
RV Nozzles	Pressure Boundary
RV Shell	Pressure Boundary
RV Shell Bottom Head	Pressure Boundary
RVI Baffle & Former Assembly	Direct Flow Shielding Structural Support
RVI Control Rod Guide Tube Assembly	Structural Support
RVI Core Barrel Assembly	Direct Flow Shielding Structural Support
RVI Hold Down Spring	Structural Support
RVI Instrumentation Support Structures	Structural Support

Table 2.3.1-1 Reactor Vessel and Internals (Continued)

Component Type	Intended Function
RVI Irradiation Specimen Basket	Structural Support
RVI Lower Core Support Structure	Direct Flow Structural Support
RVI Thermal & Neutron Shield	Shielding
RVI Upper Core Support Structure	Structural Support
Seal Table	Structural Support

The AMR results for these component types are provided in Table 3.1.2-1, Reactor Vessel, Internals and Reactor Coolant System – Summary of Aging Management Evaluation - Reactor Vessel and Internals.

2.3.1.2 Reactor Coolant System

System Description

The reactor coolant system (RCS) pressure boundary provides a barrier for containing the coolant under all anticipated temperature and pressure conditions and for limiting the release of radioactivity. The reactor pressure vessel and internals are evaluated in Section 2.3.1.1, Reactor Vessel and Internals.

The RCS consists of four similar heat transfer loops connected in parallel to the reactor pressure vessel, all of which are located inside the containment. Each loop contains a reactor coolant pump, steam generator, and associated piping and valves. The system also includes a pressurizer, a pressurizer relief tank, interconnecting piping, and instrumentation. The reactor coolant system contains four reactor coolant pumps. The reactor coolant pumps are identical single-speed centrifugal units driven by air cooled, three-phase induction motors. The shaft is vertical with the motor mounted above the pumps. A flywheel on the shaft above the motor provides additional rotational energy to extend pump coastdown.

During operation, the RCS transfers heat generated in the core to the steam generators where the steam that drives the turbine-generator is produced. Borated pressurized water circulates in the RCS, acting as a neutron moderator and reflector, and as a neutron absorber for chemical shim control. The components of the steam generators are evaluated in Section 2.3.1.4, Steam Generators.

RCS pressure is controlled by the pressurizer in which water and steam are maintained in equilibrium by electrical heaters or water sprays. The components of the pressurizer are evaluated in Section 2.3.1.3, Pressurizer.

System Intended Functions

The RCS pressure boundary provides a barrier to limit the release of radioactivity. The system is designed to maintain the reactor coolant pressure boundary integrity at the temperatures and pressures experienced under normal modes of operation and anticipated transients. The RCS provides containment isolation for penetrations where the RCS interfaces with systems outside of containment. Based on these functions, the reactor coolant system is within the scope of license renewal based on the criteria of 10 CFR 54.4(a)(1).

Portions are in scope as nonsafety-related affecting safety-related components based on the criterion of 10 CFR 54.4(a)(2) for spatial interaction and structural integrity.

Portions of the RCS are required to support fire protection, EQ, and SBO requirements and are within the scope of license renewal based on the criteria of 10 CFR 54.4(a)(3).

FSAR References

Additional details of the reactor coolant system are included in FSAR Sections 5.1, 5.2, and 6.2.4.

License Renewal Boundary Drawings

The license renewal boundary drawings for the reactor coolant system are listed below:

LR-DCPP-07-106707-02
LR-DCPP-07-106707-03
LR-DCPP-07-106707-04
LR-DCPP-07-106707-06
LR-DCPP-07-107707-02
LR-DCPP-07-107707-03
LR-DCPP-07-107707-04
LR-DCPP-07-107707-06
LR-DCPP-14-106714-06
LR-DCPP-14-107714-06

Component-Function Relationship Table

The component types subject to AMR are indicated in Table 2.3.1-2 - Reactor Coolant System.

Table 2.3.1-2 Reactor Coolant System

Component Type	Intended Function
Bellows	Leakage Boundary (spatial) Pressure Boundary
Class 1 Piping <= 4in	Pressure Boundary
Closure Bolting	Pressure Boundary
Heat Exchanger (RCP Seal Cooler)	Heat Transfer Pressure Boundary
Heat Exchanger (RPV Support Cooler Plate)	Leakage Boundary (spatial) Structural Support
Insulation	Insulate (Mechanical)
Orifice	Pressure Boundary Throttle
Piping	Leakage Boundary (spatial) Pressure Boundary Structural Integrity (attached)
Pump	Pressure Boundary
Rupture Disc	Leakage Boundary (spatial)
Tank	Leakage Boundary (spatial) Structural Integrity (attached)
Tubing	Leakage Boundary (spatial) Pressure Boundary
Valve	Leakage Boundary (spatial) Pressure Boundary Structural Integrity (attached)

The AMR results for these component types are provided in Table 3.1.2-2, Reactor Vessel, Internals and Reactor Coolant System – Summary of Aging Management Evaluation - Reactor Coolant System.

2.3.1.3 Pressurizer

System Description

The pressurizer provides a point in the RCS where liquid and vapor are maintained at equilibrium temperature and pressure under saturated conditions for pressure control purposes.

The pressurizer is a vertical, cylindrical vessel with essentially hemispherical top and bottom heads constructed of carbon steel, with austenitic stainless steel cladding on all surfaces exposed to the reactor coolant.

The surge line nozzle and removable electric heaters are installed in the bottom head. A thermal sleeve is provided to minimize stresses in the surge line nozzle. Spray line nozzles and relief and safety valve connections are located in the top head of the vessel. Spray flow is modulated by automatically controlled air-operated valves.

A small continuous spray flow is provided through a manual bypass valve around the power-operated spray valves to ensure that the pressurizer liquid is homogeneous with the coolant and to prevent excessive cooling of the spray piping. During an outsurge from the pressurizer, flashing of water to steam and generating of steam by automatic actuation of the heaters keep the pressure above the minimum allowable limit. During an insurge from the RCS, the spray system, which is fed from two cold legs, condenses steam in the vessel to prevent the pressurizer pressure from reaching the setpoint of the power-operated relief valves for normal design transients. Heaters are energized on high water level during insurge to heat the subcooled surge water that enters the pressurizer from the reactor coolant loop.

The valves and piping associated with the pressurizer are evaluated in Section 2.3.1.2, Reactor Coolant System.

System Intended Functions

The pressurizer is part of the RCS pressure boundary. It is designed to accommodate positive and negative reactor coolant surges caused by RCS transients. Therefore, the pressurizer is within the scope of license renewal based on the criteria of 10 CFR 54.4(a)(1).

Portions of the pressurizer support fire protection and SBO requirements and are within the scope of license renewal based on the criteria of 10 CFR 54.4(a)(3).

FSAR References

Additional details of the pressurizer are included in FSAR Sections 5.1 and 5.5.9.

License Renewal Boundary Drawings

There are no license renewal boundary drawings for the pressurizer.

Component-Function Relationship Table

The component types subject to AMR are indicated in Table 2.3.1-3 - Pressurizer.

Table 2.3.1-3 Pressurizer

Component Type	Intended Function
Closure Bolting	Pressure Boundary
PZR Heater Support Plate	Structural Support
PZR Heater Well Nozzle	Pressure Boundary
PZR Manways and Covers	Pressure Boundary
PZR Nozzles	Pressure Boundary Shelter, Protection
PZR Safe Ends	Pressure Boundary
PZR Seismic Lug	Structural Support
PZR Shell and Head	Pressure Boundary
PZR Spray Head	Spray
PZR Support Skirt	Structural Support

The AMR results for these component types are provided in Table 3.1.2-3, Reactor Vessel, Internals and Reactor Coolant System – Summary of Aging Management Evaluation - Pressurizer.

2.3.1.4 Steam Generators

System Description

The purpose of the steam generators is to provide heat removal from the reactor coolant system through the generation of steam and also to act as an assured

source of steam to the steam driven auxiliary feedwater pump. The steam generator boundary consists of both the primary and secondary pressure boundaries including all pieces and parts within the pressure boundary and all penetrations out to the safe ends of the penetration nozzles.

The steam generators are Westinghouse Model Delta 54 units which contain Alloy 690 thermally treated tubes. The steam generators are vertical shell and U-tube evaporators with integral moisture separating equipment. The reactor coolant flows through the inverted U-tubes, entering and leaving through the nozzles located in the hemispherical bottom head of the steam generator. Steam is generated on the shell side and flows upward through the moisture separators to the outlet nozzle at the top of the vessel. The head is divided into inlet and outlet chambers by a vertical partition plate extending from the head to the tubesheet.

System Intended Functions

The steam generators provide heat removal by the generation of steam for design basis event mitigation. The steam generators also provide an assured source of steam to the turbine driven auxiliary feedwater pump. The primary channel head and tubes form part of the reactor coolant pressure boundary. The steam generators form a part of the containment pressure boundary to prevent the release of fission products to the environment. Therefore, the steam generators are within the scope of license renewal based on the criteria of 10 CFR 54.4(a)(1).

Portions of the steam generators are in scope as nonsafety-related affecting safety-related component based on the criteria of 10 CFR 54.4(a)(2) because they are structurally attached to safety-related components and provide supporting functions such that their failure could prevent satisfactory accomplishment of safety-related functions.

Portions of the steam generators support fire protection and SBO requirements and are within the scope of license renewal based on the criteria of 10 CFR 54.4(a)(3).

FSAR References

Additional details of the steam generators are included in FSAR Sections 5.1.1, 5.5.2, and 6.5.

License Renewal Boundary Drawings

There are no license renewal boundary drawings for the steam generators.

Component-Function Relationship Table

The component types subject to AMR are indicated in Table 2.3.1-4 - Steam Generators.

Table 2.3.1-4 Steam Generators

Component Type	Intended Function
SG Closure Bolting	Pressure Boundary
SG Feedwater Ring	Direct Flow
SG Internal Structures	Direct Flow Structural Support
SG Primary Head and Divider Plate	Pressure Boundary
SG Primary Manway Covers	Pressure Boundary
SG Primary Nozzles and Safe Ends	Pressure Boundary
SG Secondary Manway and Handhole Covers	Pressure Boundary
SG Secondary Nozzles and Safe Ends	Pressure Boundary Shelter, Protection
SG Secondary Shell	Pressure Boundary
SG Separators	Direct Flow Structural Support
SG Tube Plugs	Pressure Boundary
SG Tube Support Plates	Structural Support
SG Tubes	Heat Transfer Pressure Boundary

The AMR results for these component types are provided in Table 3.1.2-4, Reactor Vessel, Internals and Reactor Coolant System – Summary of Aging Management Evaluation - Steam Generators.

2.3.1.5 Reactor Core

System Description

The reactor core consists of 193 fuel assemblies arranged in a pattern that approximates a right circular cylinder. Each fuel assembly contains a 17 x 17 rod array composed of 264 fuel rods, 24 rod cluster control assemblies (RCCA) guide

tubes, and an incore instrumentation thimble. Each rod is held in place by spacer grids and top and bottom nozzles. The fuel rods are constructed of zirconium alloy tubing containing uranium dioxide fuel pellets.

The center position in the assembly is reserved for incore instrumentation; the remaining 24 positions in the array are equipped with guide thimbles joined to the grids and the top and bottom nozzles. Depending on assembly position in the core, the guide thimbles are used as core locations for RCCAs, neutron source assemblies, and burnable absorber rods (if used).

The bottom nozzle is a box-like structure that serves as a bottom structural element of the fuel assembly and directs the coolant flow to the assembly. The top nozzle assembly functions as the upper structural element of the fuel assembly in addition to providing a partial protective housing for the RCCA or other components. Each RCCA consists of a group of individual absorber rods fastened at the top end to a common hub or spider assembly.

System Intended Functions

The fuel assemblies assist in directing reactor coolant through the core to achieve acceptable flow distribution and to restrict bypass flow so that the heat transfer performance requirements can be met for all modes of operation. The fuel cladding provides a fission product barrier. Reactivity control is achieved with the use of control rods and burnable absorber rods. The fuel assemblies are designed to accept control rod insertions to provide reactivity control. Based on these functions, the reactor core is within the scope of license renewal based on the criteria of 10 CFR 54.4(a)(1).

The reactor core supports fire protection requirements and is within the scope of license renewal based on the criteria of 10 CFR 54.4(a)(3).

The fuel assemblies and RCCAs are short-lived since they are replaced at regular intervals based on the plant fuel cycle. Thus, no components of the reactor core are subject to aging management review.

FSAR References

Additional details of the reactor core are included in FSAR Sections 4.1, 4.2, and 4.3.2.1.

License Renewal Boundary Drawings

There are no license renewal boundary drawings for the reactor core.

Component-Function Relationship Table

The component types subject to AMR are indicated in Table 2.3.1-5 - Reactor Core.

Table 2.3.1-5 Reactor Core

Component Type	Intended Function
None	N/A

2.3.2 Engineered Safety Features

This section of the application addresses scoping and screening results for the following systems:

- Safety injection (Section 2.3.2.1)
- Containment spray (Section 2.3.2.2)
- Residual heat removal (Section 2.3.2.3)
- Containment HVAC (Section 2.3.2.4)

2.3.2.1 Safety Injection System

System Description

The safety injection system provides a source of coolant to the reactor core as a part of the emergency core cooling system (ECCS). The ECCS, consists of three separate subsystems: centrifugal charging (high head), safety injection (SI) (intermediate head), and residual heat removal (RHR) (low head). Each subsystem consists of two redundant, 100 percent capacity trains. The ECCS also includes four accumulators (one on each RCS loop) and the refueling water storage tank (RWST).

The operation of the ECCS following a LOCA can be divided into two distinct modes: the injection mode and the recirculation mode.

During the injection mode, the RHR and SI pumps deliver into the accumulator injection lines between the two check valves after the RCS pressure has fallen below the pump shutoff head. The accumulators also share a portion of this injection line. The charging pumps (CCP1 and CCP2) deliver through the charging injection line directly into the cold legs.

During the recirculation mode, in which long-term core cooling is provided, water collected in the containment sump is cooled and returned to the RCS by the low-head/high-head recirculation flow paths. The recirculation flow can be supplied by the RHR pumps, or by CCP1 and CCP2 and SI pumps, with suction from the discharge of the RHR heat exchanger. The sump isolation valves are located in small steel-lined pressure-tight compartments.

The RHR pumps and heat exchangers are evaluated with the RHR system in Section 2.3.2.3 and the charging pumps are evaluated with the chemical and volume control system in Section 2.3.3.8.

The SI system consists of accumulators, SI pumps, RWST and associated piping and valves. Four accumulators, which are filled with borated water and pressurized with nitrogen gas, are connected to the four cold legs.

The RWST is normally used to supply borated water to the refueling canal for refueling operations. In addition to its usual service, the RWST provides borated water to the SI, RHR, and charging pumps and the containment spray pumps following a design basis event.

The SI pumps take their suction from the RWST during the injection mode. The suction of the SI pumps switches to the containment sumps in the recirculation mode. The suction flow path is from the containment sumps, through the RHR heat exchangers, to the SI pumps, and then into the hot legs or cold legs.

The SI system also includes the containment recirculation sump liner, the containment sump screens, the debris curb and trash racks. The containment sumps provide the suction source for the ECCS pumps during recirculation mode. The containment sump screens, debris curb and trash racks prevent debris from entering the ECCS pump suctions to ensure adequate pump suction head.

System Intended Functions

The intended functions of the SI system are to remove the stored and fission product decay heat from the reactor core following a design basis accident, provide shutdown reactivity control following the accidents by means of borated water injection, and provide containment isolation. Therefore, the SI system is within the scope of license renewal based on the criteria of 10 CFR 54.4(a)(1).

Portions of the SI system are in scope as nonsafety-related affecting safety-related components based on the criterion of 10 CFR 54.4(a)(2) for spatial interaction and structural integrity.

Portions of the SI system support fire protection and EQ requirements and are within the scope of license renewal based on the criteria of 10 CFR 54.4(a)(3).

FSAR References

Additional details of the SI system are included in FSAR Section 6.3.

License Renewal Boundary Drawings

The license renewal boundary drawings for the SI system are listed below:
LR-DCPP-09-106709-02

LR-DCPP-09-106709-03
LR-DCPP-09-106709-04
LR-DCPP-09-106720-12A
LR-DCPP-09-107709-02
LR-DCPP-09-107709-03
LR-DCPP-09-107709-04
LR-DCPP-09-107720-12A

Component-Function Relationship Table

The component types subject to AMR are indicated in Table 2.3.2-1 - Safety Injection System.

Table 2.3.2-1 Safety Injection System

Component Type	Intended Function
Class 1 Piping <= 4in	Pressure Boundary
Closure Bolting	Pressure Boundary
Expansion Joint	Pressure Boundary
Filter	Pressure Boundary
Flow Element	Pressure Boundary Throttle
Heat Exchanger (SI Pump Lube Oil)	Heat Transfer Pressure Boundary
Heat Exchanger (SI Pump Seal Water)	Heat Transfer Pressure Boundary
Indicator	Leakage Boundary (spatial) Structural Integrity (attached)
Liner Sumps	Structural Pressure Boundary
Orifice	Pressure Boundary Throttle
Piping	Leakage Boundary (spatial) Pressure Boundary Structural Integrity (attached)
Pump	Pressure Boundary

Table 2.3.2-1 Safety Injection System (Continued)

Component Type	Intended Function
Strainer	Filter Leakage Boundary (spatial)
Tank	Pressure Boundary
Thermowell	Pressure Boundary
Valve	Leakage Boundary (spatial) Pressure Boundary Structural Integrity (attached)

The AMR results for these component types are provided in Table 3.2.2-1, Engineered Safety Features – Summary of Aging Management Evaluation – Safety Injection System.

2.3.2.2 Containment Spray System

System Description

The purpose of containment spray system (CSS) is to remove heat from the containment following a loss-of-coolant accident (LOCA) or main steam line break (MSLB)) to reduce the containment ambient temperature and pressure. The CSS also delivers sodium hydroxide from the spray additive system (SAS) to mix with the borated spray water for pH control to promote absorption of airborne iodine from the containment atmosphere should this fission product be released in an accident.

The CSS consists of two pumps, spray ring headers and nozzles, valves and connecting piping. A suction path is provided to the CSS pumps from the RWST for initial system flow following a LOCA. For long term operation of containment spray, the recirculation flow from the containment sump is supplied by the RHR pumps to the CSS. Both the initial system flow from the RWST and the recirculation flow from the containment sump discharge through the spray nozzles in upper containment. The SAS, which is included in the evaluation of CSS system, consists of the spray additive tank, eductors, valves and connecting piping that provide sodium hydroxide to the CSS system for pH control.

The RWST and its associated components are evaluated with the safety injection system in Section 2.3.2.1. RHR pumps used for long term cooling are evaluated with the RHR system in Section 2.3.2.3.

System Intended Functions

The safety-related functions of CSS are to remove heat from the containment atmosphere to reduce the post-accident containment ambient temperature and pressure and in conjunction with the SAS, to ensure that offsite radiological exposures resulting from a LOCA are within the limits of 10 CFR 100 by reduction of airborne iodine levels through addition of sodium hydroxide to containment spray. Containment isolation valves are provided to ensure that containment integrity is maintained in single failure scenarios. Based on these functions, the CSS is within the scope of license renewal based on the criteria of 10 CFR 54.4(a)(1).

Portions of the CSS are in scope as nonsafety-related affecting safety-related components based on the criterion of 10 CFR 54.4(a)(2) for spatial interaction and structural integrity.

Portions of the CSS support fire protection and EQ requirements and are within the scope of license renewal based upon the criteria of 10 CFR 54.4(a)(3).

FSAR References

Additional details of the CSS are included in FSAR Sections 6.2.1, 6.2.2, and 6.2.3.

License Renewal Boundary Drawings

The license renewal boundary drawings for the CSS are listed below:
LR-DCPP-12-106712-02
LR-DCPP-12-107712-02

Component-Function Relationship Table

The component types subject to AMR are indicated in Table 2.3.2-2 - Containment Spray System.

Table 2.3.2-2 Containment Spray System

Component Type	Intended Function
Bellows	Pressure Boundary
Closure Bolting	Leakage Boundary (spatial) Pressure Boundary Structural Integrity (attached)
Eductor	Pressure Boundary
Flow Element	Pressure Boundary Throttle
Orifice	Pressure Boundary Throttle
Piping	Leakage Boundary (spatial) Pressure Boundary Structural Integrity (attached)
Pump	Pressure Boundary
Spray Nozzle	Spray
Tank	Pressure Boundary
Tubing	Pressure Boundary
Valve	Leakage Boundary (spatial) Pressure Boundary Structural Integrity (attached)

The AMR results for these component types are provided in Table 3.2.2-2, Engineered Safety Features – Summary of Aging Management Evaluation – Containment Spray System.

2.3.2.3 Residual Heat Removal System

System Description

The purpose of the residual heat removal (RHR) system is to remove decay heat with long-term recirculation capability in post accident conditions and to provide safety injection. The system is also used for shutdown cooling in non-accident conditions to remove decay heat.

The RHR system consists of two redundant trains, each of which includes a containment recirculation sump, RHR pump, heat exchanger, and associated valves and piping. Suction paths are provided from the refueling water storage tank for safety injection flow and from the containment recirculation sumps for long-term post-LOCA decay heat removal. The recirculation sump is evaluated with the safety injection system in Section 2.3.2.1. Suction is taken from the hot leg of reactor coolant loop 4 for normal cooling. Each train is provided with a discharge path to both the hot and cold legs. The RHR pump can also discharge through the containment spray nozzles during the recirculation phase following a LOCA.

System Intended Functions

The RHR system provides borated water for RCS makeup in LOCA conditions and for removing decay heat in post-accident and normal shutdown conditions. Containment isolation valves are provided to ensure that containment integrity is maintained in single failure scenarios. Therefore, the RHR system is within the scope of license renewal based on the criteria of 10 CFR 54.4(a)(1).

Portions of the RHR system form spatial leakage boundaries that are within the scope of license renewal based on the criterion of 10 CFR 54.4(a)(2) for spatial interaction and structural integrity.

Portions of the RHR system support fire protection and EQ requirements and are within the scope of license renewal based on the criteria of 10 CFR 54.4(a)(3).

FSAR References

Additional details of the RHR system are included in FSAR Section 5.5.6.

License Renewal Boundary Drawings

The license renewal boundary drawings for the RHR system are listed below:
LR-DCPP-10-106710-02
LR-DCPP-10-107710-02

Component-Function Relationship Table

The component types subject to AMR are indicated in Table 2.3.2-3 - Residual Heat Removal System.

Table 2.3.2-3 Residual Heat Removal System

Component Type	Intended Function
Closure Bolting	Pressure Boundary
Flow Element	Pressure Boundary Throttle
Heat Exchanger (Residual Heat Removal)	Heat Transfer Pressure Boundary
Orifice	Pressure Boundary Throttle
Piping	Direct Flow Leakage Boundary (spatial) Pressure Boundary Structural Integrity (attached)
Pump	Pressure Boundary
Tubing	Pressure Boundary
Valve	Leakage Boundary (spatial) Pressure Boundary Structural Integrity (attached)

The AMR results for these component types are provided in Table 3.2.2-3, Engineered Safety Features – Summary of Aging Management Evaluation – Residual Heat Removal System.

2.3.2.4 Containment HVAC System

System Description

The containment HVAC system is designed to maintain temperature and pressure within the containment at acceptable levels for equipment operation and personnel access at power for inspection, maintenance, and testing. Following a design basis event, the fan cooler units operate to reduce the containment atmosphere temperature and pressure.

The containment HVAC systems include the following:

- containment fan cooler system (CFCS)
- containment purge system
- control rod drive mechanism (CRDM) exhaust system

- containment hydrogen control system
- iodine removal system
- pressure relief line
- vacuum relief line
- incore instrument room cooling system (abandoned-in-place)

Containment Fan Cooler System (CFCS)

The purpose of the CFCS is to recirculate and cool the air within the containment during normal plant operation. During accident conditions it is designed to operate as a part of the containment heat removal system and maintain the post-accident pressure below the design value. The CFCS is located inside the containment but outside the missile shield. Major components consist of the containment fan cooling units, dampers, ductwork and supports. Cooling water for the containment fan coolers is provided by the CCW system, which is addressed in Section 2.3.3.4.

Containment Air Purge System

The purpose of the containment air purge system is to reduce the airborne radioactive concentration in the containment atmosphere to facilitate entry of personnel into the containment. Following the radioactivity reduction process, the containment purge system provides the supply air to and exhaust air from the containment for purge and ventilation. The containment purge flow to the plant vent is monitored for radioactivity. Major components include supply fan, purge exhaust fan, distribution ductwork and dampers. The fans are located in the auxiliary building.

Control Rod Drive Mechanism (CRDM) Exhaust System

The purpose of the CRDM exhaust system is to remove heat from the CRDM area during normal plant operation. This system consists of exhaust fans mounted on the removable CRDM shroud. This system is not designed to operate during accident conditions.

Containment Hydrogen Control System

The purpose of the containment hydrogen control system is to control the hydrogen concentration inside the containment during accident conditions. The containment hydrogen control system consists of the containment internal hydrogen recombiner

system which serves as the primary system, and the containment hydrogen purge system which is for backup. The internal electric hydrogen recombiners system controls containment hydrogen concentration following a LOCA. Major components of the electric hydrogen recombiners system consist of the electric heater banks, power supply panels, and control panels. The recombination units are located inside the containment building; the power supply and control panels are located outside this building.

The containment hydrogen purge system is the backup to the internal hydrogen recombiners for control of hydrogen and includes provisions for post-accident installation of portable recombiners. Major components of this system consist of redundant purge and supply ductwork, associated isolation valves, roughing filter, HEPA filter, charcoal, HEPA after-filter, a blower, and the associated plant vent radiation monitoring systems.

Iodine Removal System

The iodine removal system is provided for pre-entry cleanup of the containment atmosphere. The system consists of two iodine removal units that have roughing, HEPA, and charcoal filter banks. The iodine removal system is not designed to be operated during accident conditions.

Pressure Relief Line

The containment pressure relief line connects to the suction side of the containment purge fan which then discharges into the plant vent. The pressure relief flow is driven by the pressure differential between the containment and the outside atmosphere, and does not require operation of the fan.

Vacuum Relief Line

The vacuum relief line uses suction air from the containment purge air supply fan plenum to release the vacuum inside the containment. The operation is independent of the purge system operation and manually operated.

Incore Instrument Room Cooling System

The incore instrument room cooling system is abandoned-in-place and is no longer in use.

System Intended Functions

The safety-related portions of the containment HVAC system help to maintain containment temperature and pressure and post-accident hydrogen concentration levels. Also, portions of the system provide a containment isolation function. Therefore, portions of the containment HVAC system are within the scope of license renewal based on the criteria of 10 CFR 54.4(a)(1).

The nonsafety-related portions of the containment HVAC system piping and piping components routed through the auxiliary building and containment building have the potential for spatial interaction through leakage. Portions of the containment HVAC system attach to safety-related piping such that their failure could prevent satisfactory accomplishment of safety-related system functions. Portions of the containment HVAC system are in scope as non-safety affecting safety-related components. Therefore, portions of the containment HVAC system are within the scope of license renewal based on the criterion of 10 CFR 54.4(a)(2).

Portions of the containment HVAC system related to containment isolation support EQ requirements and are within the scope of license renewal based on the criterion of 10 CFR 54.4(a)(3).

FSAR References

Additional details of the containment HVAC system are included in FSAR Sections 6.2.2, 6.2.4, 6.2.5, and 9.4.5.

License Renewal Boundary Drawings

The license renewal boundary drawings for the containment HVAC system are listed below:
LR-DCPP-23A-106723-02
LR-DCPP-23A-106723-03
LR-DCPP-23A-106723-04
LR-DCPP-23A-106723-06
LR-DCPP-23A-107723-02
LR-DCPP-23A-107723-03
LR-DCPP-23A-107723-04
LR-DCPP-23A-107723-06

Component-Function Relationship Table

The component types subject to AMR are indicated in Table 2.3.2-4 - Containment HVAC System.

Table 2.3.2-4 Containment HVAC System

Component Type	Intended Function
Closure Bolting	Leakage Boundary (spatial) Pressure Boundary Structural Integrity (attached) Structural Support
Damper	Pressure Boundary Structural Support
Ductwork	Pressure Boundary Structural Integrity (attached) Structural Support
Fan	Pressure Boundary Structural Integrity (attached) Structural Support
Filter	Pressure Boundary Structural Support
Flex Connectors	Pressure Boundary
Flow Element	Pressure Boundary
Heat Exchanger (Containment Fan Motor)	Heat Transfer Pressure Boundary
Heat Exchanger (Containment Fan)	Heat Transfer Pressure Boundary
Heat Exchanger (Containment Purge)	Heat Transfer Pressure Boundary
Heat Exchanger (Incore Instrument Room)	Leakage Boundary (spatial) Structural Support
Piping	Leakage Boundary (spatial) Pressure Boundary Structural Integrity (attached) Structural Support
Recombiners	Structural Support
Separator	Pressure Boundary
Solenoid Valve	Structural Integrity (attached)

Table 2.3.2-4 Containment HVAC System (Continued)

Component Type	Intended Function
Tubing	Leakage Boundary (spatial) Pressure Boundary Structural Integrity (attached)
Valve	Leakage Boundary (spatial) Pressure Boundary Structural Integrity (attached) Structural Support

The AMR results for these component types are provided in Table 3.2.2-4, Engineered Safety Features – Summary of Aging Management Evaluation – Containment HVAC System.

2.3.3 Auxiliary Systems

This section of the application addresses scoping and screening results for the following systems:

- Cranes and fuel handling (Section 2.3.3.1)
- Spent fuel pool cooling (Section 2.3.3.2)
- Saltwater and chlorination (Section 2.3.3.3)
- Component cooling water (Section 2.3.3.4)
- Makeup water (Section 2.3.3.5)
- Nuclear steam supply sampling (Section 2.3.3.6)
- Compressed air (Section 2.3.3.7)
- Chemical and volume control (Section 2.3.3.8)
- Miscellaneous HVAC (Section 2.3.3.9)
- Control Room HVAC (Section 2.3.3.10)
- Auxiliary building HVAC (Section 2.3.3.11)
- Fire Protection (Section 2.3.3.12)
- Diesel generator fuel oil (Section 2.3.3.13)
- Diesel generator (Section 2.3.3.14)
- Lube Oil (Section 2.3.3.15)
- Gaseous radwaste (Section 2.3.3.16)
- Liquid radwaste (Section 2.3.3.17)
- Miscellaneous systems in scope ONLY for criterion 10 CFR 54.4(a)(2) (Section 2.3.3.18), includes:
    - Radiation monitoring system (mechanical)
    - Secondary sampling
    - Service cooling water
    - Solid radwaste

2.3.3.1 Cranes and Fuel Handling System

System Description

Cranes

Overhead load handling systems provide lifting and maneuvering capability in various buildings and structures (e.g. auxiliary, containment, fuel, turbine and intake structures) on the site. These systems are composed of cranes, crane-rails hoists, elevators, monorails, and trolleys.

Crane supports are evaluated with their appropriate structure in Section 2.4.

The following cranes, monorails and trolleys are within the scope of license renewal:

Component Name

Fuel Handling Building Overhead Crane (including rails)
Fuel Handling Building Overhead Crane Trolley (including rails)
Intake Structure Gantry Crane (including rails)
Intake Structure Gantry Crane Trolley (including rails)
Building Heater Reboiler 0-1 Monorail
Motor Aux Feedwater Pump 1/2-2 Monorail
RHR Heat Exchanger 1/2-1, 1/2-2 Monorail
Motor-Gen Set 1/2-1 Monorail
Motor-Gen Set 1/2-2 Monorail
Spent Fuel Area Bridge Crane (Dual Hoist) (including rails)
RHR Pump 1/2-1, 1/2-2 Monorail Hoists
CCW Pump 1/2-1, 1/2-2, 1/2-3 Monorail
Charging Pump 1/2-1, 1/2-2 Monorail
Charging Pump 1/2-3/Cont Spray Pump Monorail
Safety Injection Pump 1/2-1, 1/2-2 Monorail
Containment Polar Crane (including rails)
Containment Polar Crane Trolley (including rails)
Reactor Cavity Manipulator Crane 1/2-1 (including rails)
Reactor Cavity Manipulator Crane 1/2-1 Trolley (including rails)
Containment Dome Service Crane
Reactor Cavity Service Jib Crane
Head Stud Tensioner Monorail
Missile Shield Hoist
Containment Equipment Hatch Monorail
Moisture Separator Reheater 1/2-2A Monorail
Turbine Building Bridge Crane (including rails)
Turbine Building Bridge Crane Trolley (including rails)
Monorail for Electrical Pull Box Covers BP014 Through BP020

Fuel Handling

The fuel handling system (FHS) facilitates the handling of fuel assemblies. The FHS consists of equipment and structures utilized for handling new and spent fuel assemblies in a safe manner during refueling, fuel transfer, and cask loading operations. The FHS equipment needed for the refueling of the reactor core

consists of cranes, lifting and handling devices including tools, and a fuel transfer system.

The following fuel handling equipment is within the scope of license renewal:

Component Name

New Fuel Elevator 1-1 (SFP)
New Fuel Elevator 2-1 (SFP)
Spent Fuel Handling Tool (1 tool per unit)

System Intended Functions

The cranes and fuel handling system contains nonsafety-related Category 1 handling systems which carry heavy loads over safety-related components required for plant shutdown or decay heat removal, or over irradiated fuel in the reactor vessel or spent fuel pool. Therefore, portions of the cranes and fuel handling system are within the scope of license renewal based on the criterion of 10 CFR 54.4(a)(2).

FSAR References

Additional details of the cranes and fuel handling system are included in FSAR Section 9.1.4.

License Renewal Boundary Drawings

There are no license renewal boundary drawings for the cranes and fuel handling system.

Component-Function Relationship Table

The component types subject to AMR are indicated in Table 2.3.3-1 – Cranes and Fuel Handling System.

Table 2.3.3-1 Cranes and Fuel Handling System

Component Type	Intended Function
Crane	Structural Support
Cranes - Rails	Structural Support
Elevator	Structural Support
Fuel Handling Equipment	Structural Support
Trolley	Structural Support

The AMR results for these component types are provided in Table 3.3.2-1, Auxiliary Systems – Summary of Aging Management Evaluation – Cranes and Fuel Handling System.

2.3.3.2 Spent Fuel Pool Cooling System

System Description

The spent fuel pool (SFP) cooling and cleanup system removes decay heat from fuel stored in the SFP. Heat is transferred through the SFP heat exchanger to the component cooling water system. The refueling water purification (RWP) subsystem is included as part of this system to maintain water clarity and purity. The system also includes the new fuel racks, the spent fuel racks and cask pit storage cask restraint fixtures. The permanent spent fuel racks do not credit boron-absorbing panels but instead credit soluble boron in the SFP. A temporary cask pit spent fuel rack is installed in Unit 2 and is authorized for use until the end of cycle 16. The new fuel racks are not located in the SFP but are evaluated as part of this system for license renewal.

When the SFP cooling and cleanup system is in operation, water flows from the SFP to the SFP pump suction, is pumped through the tube side of the heat exchanger, and is returned to the pool. The suction line is located below the normal SFP water level, while the return line contains an anti-siphon hole near the surface of the water to prevent gravity drainage of the pool. While the heat removal operation is in process, a portion of the SFP water may be diverted away from the heat exchanger through the RWP subsystem to maintain water clarity and purity.

During refueling outages, connections are provided such that the refueling water may be pumped from either the RWST or the refueling cavity, through the RWP

subsystem and discharged to either the refueling cavity or the RWST. In addition to this flowpath, it is possible to manually align the SFP cleanup system with the RWP system to clean the refueling canal water during fuel movement. The RWP pump may also be utilized to pump down the refueling canal by pumping water to the liquid hold-up tanks, located in the chemical and volume control system, through the RWP filter. To further assist in maintaining SFP water clarity, the water surface is cleaned by a skimmer loop.

Demineralized makeup water can be added directly to the SFP. Water from the condensate storage tank is pumped to the SFP using the makeup water transfer pumps and appropriate interconnecting piping and valves.

System Intended Functions

The safety-related portions of the SFP cooling system maintain a water inventory in the SFP sufficient to keep fuel immersed at all times, maintain SFP water temperature below prescribed limits by transferring decay heat to the component cooling water system, and supply make-up water to the refueling water storage tank. The new fuel racks and spent fuel racks provide structural support and geometry for storage of fuel. . Therefore, portions of the SFP cooling system are within scope of license renewal based on the criteria of 10 CFR 54.4(a)(1).

The nonsafety-related portions of the piping, piping components, and piping elements of the SFP cooling system have the potential for spatial interaction through leakage. Also, some of these components attach to safety-related piping such that their failure could prevent satisfactory accomplishment of safety-related system function(s). The cask pit storage cask restraint fixtures provide support during spent fuel cask handling. Therefore, portions of the SFP cooling system are within scope of license renewal based on the criterion of 10 CFR 54.4(a)(2).

FSAR References

Additional details of the spent fuel pool cooling system are included in FSAR Section 9.1.1, 9.1.2, and 9.1.3.

License Renewal Boundary Drawings

The license renewal boundary drawings for the spent fuel pool cooling system are listed below:
LR-DCPP-13-106713-02
LR-DCPP-13-107713-02

Component-Function Relationship Table

The component types subject to AMR are indicated in Table 2.3.3-2 – Spent Fuel Pool Cooling System.

Table 2.3.3-2 Spent Fuel Pool Cooling System

Component Type	Intended Function
Closure Bolting	Leakage Boundary (spatial) Pressure Boundary Structural Integrity (attached)
Demineralizer	Pressure Boundary
Filter	Leakage Boundary (spatial) Pressure Boundary
Flexible Hoses	Leakage Boundary (spatial)
Flow Element	Leakage Boundary (spatial) Pressure Boundary Structural Integrity (attached)
Heat Exchanger (Spent Fuel Pit)	Heat Transfer Pressure Boundary
Piping	Leakage Boundary (spatial) Pressure Boundary Structural Integrity (attached)
Platform	Structural Support
Pump	Leakage Boundary (spatial) Pressure Boundary
Rack	Structural Support
Sight Gauge	Leakage Boundary (spatial) Structural Integrity (attached)
Strainer	Filter Leakage Boundary (spatial)
Test Connection	Leakage Boundary (spatial) Pressure Boundary Structural Integrity (attached)
Trap	Pressure Boundary
Tubing	Leakage Boundary (spatial) Pressure Boundary Structural Integrity (attached)
Valve	Leakage Boundary (spatial) Pressure Boundary Structural Integrity (attached)

The AMR results for these component types are provided in Table 3.3.2-2, Auxiliary Systems – Summary of Aging Management Evaluation – Spent Fuel Pool Cooling System.

2.3.3.3 Saltwater and Chlorination System

System Description

The saltwater and chlorination system has two subsystems, the auxiliary saltwater (ASW) system and the circulating saltwater system. A chlorination/dechlorination system is associated with each of these subsystems. The ASW system is a safety-related system that supplies cooling water from the ultimate heat sink, the Pacific Ocean, to the component cooling water (CCW) heat exchangers. The ASW system is designed to remove the heat from the CCW system during all modes of operation including design basis accident conditions. The CCW system is evaluated in Section 2.3.3.4.

Each unit is provided with two Class I ASW trains with crosstie capability. Each train consists of a full-capacity ASW pump, the tube side of a CCW heat exchanger, and the associated supply and discharge piping for the CCW heat exchanger.

The circulating saltwater system is a nonsafety-related system that consists of two circulating water pumps per unit and the associated piping from the intake structure to the main condenser and then to the discharge structure.

Also included are the Class II chlorination/dechlorination systems which are located externally from the ASW system and the circulating saltwater system. They provide chlorinated water at the ASW pump suction and at the circulating water pump suction. The dechlorination portion of the system has provisions to allow connections to provide an aqueous stream of sodium bisulfite to the ASW system and circulating saltwater system discharge streams. The chlorination/dechlorination systems are designed to control biofouling and corrosion in the tubes of the CCW heat exchanger and the main condenser.

The saltwater and chlorination system components (pumps, piping, valves, etc.) are located either in the intake structure which includes the ASW pump vaults and vacuum breaker vaults, or in the turbine building. The CCW heat exchanger is located in the turbine building. The saltwater and chlorination system piping runs underground from the intake structure to the turbine building. System piping is mostly buried or embedded in concrete except for the sections of piping in the intake structure and turbine building exposed to plant indoor air. ASW subsystem piping

downstream of the CCW heat exchanger discharges into the circulating water outlet at the discharge structure.

System Intended Functions

The ASW system portion of the saltwater and chlorination system is a safety-related system that is designed to remove heat from the CCW system which in turn cools vital and non-vital components during normal operation and accident conditions. Therefore, the ASW system is within scope of license renewal based on the criteria of 10 CFR 54.4(a)(1).

Portions of the saltwater and chlorination system are in scope as nonsafety affecting safety-related components based on the criterion of 10 CFR 54.4(a)(2) due to spatial interaction and structural integrity.

Portions of the saltwater and chlorination system support fire protection and SBO requirements and are within the scope of license renewal based on the criteria of 10 CFR 54.4(a)(3).).

FSAR References

Additional details of the saltwater and chlorination system are included in FSAR Sections 9.2.7, 10.4.5 and Table 9.2-1.

License Renewal Boundary Drawings

The license renewal boundary drawings for the saltwater and chlorination system are listed below:
LR-DCPP-17-106717-07
LR-DCPP-17-106717-7A
LR-DCPP-17-106717-08
LR-DCPP-17-106717-09

Component-Function Relationship Table

The component types subject to AMR are indicated in Table 2.3.3-3 – Saltwater and Chlorination System.

Table 2.3.3-3 Saltwater and Chlorination System

Component Type	Intended Function
Bellows	Pressure Boundary
Closure Bolting	Leakage Boundary (spatial) Pressure Boundary
Expansion Joint	Leakage Boundary (spatial) Structural Integrity (attached)
Flexible Hoses	Leakage Boundary (spatial) Pressure Boundary
Flow Element	Pressure Boundary
Piping	Leakage Boundary (spatial) Pressure Boundary Structural Integrity (attached)
Pump	Pressure Boundary
Screen	Filter Leakage Boundary (spatial) Structural Integrity (attached)
Test Connection	Pressure Boundary
Thermowell	Pressure Boundary
Tubing	Leakage Boundary (spatial) Pressure Boundary
Valve	Leakage Boundary (spatial) Pressure Boundary Structural Integrity (attached)

The AMR results for these component types are provided in Table 3.3.2-3, Auxiliary Systems – Summary of Aging Management Evaluation – Saltwater and Chlorination System.

2.3.3.4 Component Cooling Water System

System Description

The component cooling water (CCW) system is a closed-cycle cooling system that provides cooling water to vital and non-vital components in all plant operating modes, including normal power operation, plant cooldown, and emergencies, including a LOCA or MSLB. The system serves as a monitored intermediate barrier

between equipment and components handling radioactive fluids and the auxiliary saltwater system. The system consists of three parallel loops, two redundant vital service loops, A and B, which provide cooling water to the unit's ESF equipment and the post-LOCA sample cooler (loop A only), and a third miscellaneous service loop, loop C, which provides cooling water to non-vital equipment.

Following a LOCA or MSLB accident, when the containment pressure reaches the high setpoint, a phase A isolation signal is generated and CCW flow to the excess letdown heat exchanger is isolated. When the containment pressure reaches the high-high setpoint (phase B isolation), a signal to close non-vital header C is generated. The portion of the non-vital header, which serves the reactor coolant pumps and vessel support coolers located within the reactor primary shield wall, is independently isolated from the C header to assure isolation due to its vulnerability during a LOCA.

All loop C components are considered safety-related for pressure boundary integrity purposes. The CCW system piping to the loop C components is classified Design Class I up to the inlet and outlet nozzles on these components.

The CCW system consists of three CCW pumps, two CCW heat exchangers, an internally baffled CCW surge tank, two chemical addition tanks, valves, and piping. The piping system consists of three parallel loops. The CCW system components (pumps, heat exchangers, etc.) are located in the auxiliary building and turbine building. Components cooled by the CCW system are located in the containment, auxiliary, fuel, and turbine buildings.

System Intended Functions

The component cooling water system is a safety-related system that is designed to remove heat from various vital and non-vital components. The system removes heat from vital components during normal and accident conditions. The nonsafety-related loop C portion of the system is considered safety-related for pressure boundary integrity purposes. Therefore, the CCW system is within the scope of license renewal based on the criteria of 10 CFR 54.4(a)(1).

Portions of the component cooling water system are in scope as nonsafety affecting safety-related components based on the criterion of 10 CFR 54.4(a)(2) due to special interaction and structural integrity.

Portions of the component cooling water system support fire protection, EQ and SBO requirements and are within the scope of license renewal based on the criteria of 10 CFR 54.4(a)(3).

FSAR References

Additional details of the component cooling water system are included in FSAR Section 9.2.2.

License Renewal Boundary Drawings

The license renewal boundary drawings for the component cooling water system are listed below:
LR-DCPP-14-106714-02
LR-DCPP-14-106714-03
LR-DCPP-14-106714-04
LR-DCPP-14-106714-05
LR-DCPP-14-106714-06
LR-DCPP-14-106714-07
LR-DCPP-14-106714-08
LR-DCPP-14-106714-09
LR-DCPP-14-107714-02
LR-DCPP-14-107714-03
LR-DCPP-14-107714-04
LR-DCPP-14-107714-05
LR-DCPP-14-107714-06
LR-DCPP-14-107714-07
LR-DCPP-14-107714-08
LR-DCPP-14-107714-09

Component-Function Relationship Table

The component types subject to AMR are indicated in Table 2.3.3-4 - Component Cooling Water System.

Table 2.3.3-4 Component Cooling Water System

Component Type	Intended Function
Closure Bolting	Leakage Boundary (spatial) Pressure Boundary Structural Integrity (attached)
Flexible Hoses	Pressure Boundary
Flow Element	Pressure Boundary
Heat Exchanger (CCW Heat Exchanger)	Heat Transfer Pressure Boundary

Table 2.3.3-4 Component Cooling Water System (Continued)

Component Type	Intended Function
Heat Exchanger (CCW Pump Lube Oil Cooler)	Heat Transfer Pressure Boundary
Heat Exchanger (RCP Bearing Oil Cooler)	Leakage Boundary (spatial) Pressure Boundary Structural Support
Heat Exchanger (RHR Pump Seal Water Cooler)	Heat Transfer Pressure Boundary
Indicator	Pressure Boundary
Orifice	Pressure Boundary Throttle
Piping	Leakage Boundary (spatial) Pressure Boundary Structural Integrity (attached)
Pump	Pressure Boundary
Regulators	Pressure Boundary
Sight Gauge	Pressure Boundary
Strainer	Filter Pressure Boundary
Tank	Leakage Boundary (spatial) Pressure Boundary Structural Integrity (attached)
Test Connection	Pressure Boundary
Thermowell	Pressure Boundary
Tubing	Pressure Boundary
Valve	Leakage Boundary (spatial) Pressure Boundary Structural Integrity (attached)

The AMR results for these component types are provided in Table 3.3.2-4, Auxiliary Systems – Summary of Aging Management Evaluation – Component Cooling Water System.

2.3.3.5 Makeup Water System

System Description

The makeup water system (MWS) supplies demineralized makeup water necessary for normal reactor coolant services, secondary system makeup, firewater, and miscellaneous plant uses including domestic and drinking water. The system has the capacity necessary to meet the water requirements of a cold plant shutdown and subsequent startup from cold conditions at a time later in core life.

The system includes the safety-related condensate storage tanks (CSTs) and firewater/transfer tank. The system provides safety-related makeup water to the auxiliary feedwater system, component cooling water surge tanks, the spent fuel pools, and the firewater pumps header. The remainder of the system is nonsafety-related.

The CSTs and firewater/transfer tank are located outdoors next to the fuel handling buildings. The raw water reservoirs are evaluated with the Earthwork and Yard Structures in Section 2.4.11 and are located outdoors east of the plant buildings outside the protected area. MWS piping runs throughout the plant yard and through the fuel handing, auxiliary and turbine buildings.

System Intended Functions

The makeup water system supplies demineralized water to various primary and secondary plant systems. The safety-related portions of the system include the makeup water piping to the auxiliary feedwater system, component cooling water system, spent fuel pool cooling system and fire protection system. Therefore, the makeup water system is within the scope of license renewal based on the criteria of 10 CFR 54.4(a)(1).

Portions of the makeup water system located in the fuel handling and auxiliary buildings have the potential for spatial interaction and as nonsafety affecting safety-related components. Therefore, portions of the system are within scope of license renewal based on the criterion of 10 CFR 54.4(a)(2).

Portions of the makeup water system support fire protection and SBO requirements and are within the scope of license renewal based on the criteria of 10 CFR 54.4(a)(3).

FSAR References

Additional details of the makeup water system are included in FSAR Sections 9.1.3.2, 9.2.2.3.3, 9.2.3, and 9.2.6.

License Renewal Boundary Drawings

The license renewal boundary drawings for the makeup water system are listed below:
LR-DCPP-16-106716-03
LR-DCPP-16-106716-11
LR-DCPP-16-106716-14
LR-DCPP-16-106716-16
LR-DCPP-16-106716-17
LR-DCPP-16-106716-18
LR-DCPP-16-106716-19
LR-DCPP-16-106716-20
LR-DCPP-16-106716-21

Component-Function Relationship Table

The component types subject to AMR are indicated in Table 2.3.3-5 – Makeup Water System.

Table 2.3.3-5 Makeup Water System

Component Type	Intended Function
Closure Bolting	Leakage Boundary (spatial) Pressure Boundary
Eductor	Leakage Boundary (spatial)
Flexible Hoses	Leakage Boundary (spatial)
Flow Element	Leakage Boundary (spatial)
Heater	Leakage Boundary (spatial)
Orifice	Leakage Boundary (spatial) Pressure Boundary Throttle
Piping	Leakage Boundary (spatial) Pressure Boundary Structural Integrity (attached)
Pump	Leakage Boundary (spatial) Pressure Boundary

Table 2.3.3-5 Makeup Water System (Continued)

Component Type	Intended Function
Sample Sink	Leakage Boundary (spatial)
Sample Vessel	Leakage Boundary (spatial)
Screen	Filter
Strainer	Leakage Boundary (spatial)
Tank	Leakage Boundary (spatial) Pressure Boundary
Test Connection	Pressure Boundary
Trap	Leakage Boundary (spatial) Pressure Boundary
Tubing	Leakage Boundary (spatial) Pressure Boundary
Valve	Leakage Boundary (spatial) Pressure Boundary Structural Integrity (attached)
Vent	Pressure Boundary

The AMR results for these component types are provided in Table 3.3.2-5, Auxiliary Systems – Summary of Aging Management Evaluation – Makeup Water System.

2.3.3.6 Nuclear Steam Supply Sampling System

System Description

The nuclear steam supply sampling system provides the representative samples for laboratory analyses. The analyses show both chemical and radiochemical conditions and provide guidance in the operation of the reactor coolant, residual heat removal, and chemical and volume control systems. Typical information obtained includes: reactor coolant boron and chloride concentrations, fission product radioactivity level, hydrogen, oxygen, and fission gas content, conductivity, pH, corrosion product concentration, chemical additive concentration. The information is used in regulating boron concentration adjustments, evaluating fuel element integrity and CVCS mixed bed demineralizer performance, and regulating additions of corrosion-inhibiting chemicals to the systems.

Samples are drawn from the following locations:

Inside Containment

- pressurizer steam space (RCS)
- pressurizer liquid space (RCS)
- hot legs of reactor coolant loops (2 points in the RCS)
- each accumulator (safety injection system)

Outside Containment

- letdown line (two points, upstream and downstream of the demineralizers) (CVCS)
- each RHR heat exchanger outlet (RHR)
- volume control tank gas and liquid space (CVCS)

Local sample connections are provided at various locations throughout the plant. These connections are not considered part of the sampling system. Samples originating from locations within the containment flow through lines to the sampling room in the auxiliary building. Each line is equipped with a manual isolation valve close to the sample source, a remote air-operated valve immediately downstream of the isolation valve, and containment boundary isolation valves located inside and outside the containment. Manual valves are located inside the sampling room for component isolation, sample flow control, and routing. High-temperature sample lines also contain a sample heat exchanger.

The reactor coolant hot leg samples are routed through a sufficiently long length of tubing inside containment, and flow rates are controlled to permit decay of the short-lived N-16 isotope to a level that permits normal access to the sampling room. This room has controlled ventilation and drainage to control radioactivity release.

All sample lines originating from locations outside the containment are provided with manual isolation valves. The RHR system sample lines and the volume control tank liquid sample line have, in addition, a remote air-operated sampling valve. Manual valves are located in the sampling room for flow control and routing.

The sample sink, which is located in the sampling room, contains a drain line to the waste disposal system. Local instrumentation is provided to permit manual control

of sampling operations and to ensure that the samples are at suitable temperatures and pressures before diverting flow to the sample sink. All sample lines are provided with a sample valve located at the sample sink, except for the volume control tank gas sample.

The sample sink has a hood that is connected to the building ventilation exhaust system.

Post-Accident Sampling System (PASS)

The post-accident sampling system initially provided facilities for prompt, remote sampling and analysis of the RCS and containment atmosphere following an accident. This information was required to assess core and containment atmosphere conditions and to assist in the planning of the course of recovery from an accident. However, based on License Amendment 149, a portion of the PASS is retained.

The PASS is composed of the reactor coolant liquid sampling system and the containment air sampling system. It is to be noted that the Unit 1 PASS superseded the Unit 1 Interim Post-LOCA Sampling System (IPLSS). There is no IPLSS on Unit 2. The Unit 1 IPLSS is not being used and has been left in place.

System Intended Functions

Portions of the nuclear steam supply sampling system provide a containment isolation function. The containment isolation function is provided by two isolation valves, one inside and one outside the containment, on all sample lines leaving the containment. The valves trip closed upon actuation of the containment isolation signal. Therefore, portions of the nuclear steam supply sampling system are within scope of license renewal based on the criteria of 10 CFR 54.4(a)(1).

Nonsafety-related portions of the nuclear steam supply sampling system are spatially located such that they could impact safety-related components and are in scope as nonsafety affecting safety-related components based on the criterion of 10 CFR 54.4(a)(2).

Portions of the nuclear steam supply sampling system related to containment isolation support EQ requirements and are within scope of license renewal based on the criteria of 10 CFR 54.4(a)(3).

FSAR References

Additional details of the nuclear steam supply sampling system are included in FSAR Sections 6.2.4, 7.3.1.1, and 9.3.2.

License Renewal Boundary Drawings

The license renewal drawings for the nuclear steam supply sampling system are listed below:
LR-DCPP-11-106711-02
LR-DCPP-11-106711-03
LR-DCPP-11-106711-04
LR-DCPP-11-106711-05
LR-DCPP-11-106711-06
LR-DCPP-11-106711-07
LR-DCPP-11-107711-02
LR-DCPP-11-107711-03
LR-DCPP-11-107711-04
LR-DCPP-11-107711-05
LR-DCPP-11-107711-06

Component-Function Relationship Table

The component types subject to AMR are indicated in Table 2.3.3-6 – Nuclear Steam Supply Sampling System.

Table 2.3.3-6 Nuclear Steam Supply Sampling System

Component Type	Intended Function
Closure Bolting	Leakage Boundary (spatial) Pressure Boundary Structural Integrity (attached)
Heat Exchanger (Hot Leg Sample)	Leakage Boundary (spatial) Structural Integrity (attached)
Heat Exchanger (Liquid Sample)	Leakage Boundary (spatial) Structural Integrity (attached)
Heat Exchanger (NSSS Sample)	Leakage Boundary (spatial) Structural Integrity (attached)
Heat Exchanger (Post LOCA Sample)	Leakage Boundary (spatial) Structural Integrity (attached)
Heat Exchanger (Steam Sample)	Leakage Boundary (spatial) Structural Integrity (attached)

Table 2.3.3-6 Nuclear Steam Supply Sampling System (Continued)

Component Type	Intended Function
Piping	Leakage Boundary (spatial) Pressure Boundary Structural Integrity (attached)
Pump	Leakage Boundary (spatial)
Sample Sink	Leakage Boundary (spatial)
Switch	Leakage Boundary (spatial)
Tank	Leakage Boundary (spatial)
Tubing	Leakage Boundary (spatial)
Valve	Leakage Boundary (spatial) Pressure Boundary Structural Integrity (attached)

The AMR results for these component types are provided in Table 3.3.2-6, Auxiliary Systems – Summary of Aging Management Evaluation – Nuclear Steam Supply Sampling System.

2.3.3.7 Compressed Air System

System Description

The compressed air system provides compressed air for process control systems and for station service throughout Units 1 and 2 under normal operating conditions. It includes the backup air/nitrogen supply system, which supplies the motive force to operate certain air-operated components in the event of a loss of the compressed air system. The compressed air system is required for startup and normal operation of the plant but is not required for safe shutdown, reactor protection, containment isolation, or engineered safety features. Consequently, except for the backup air/nitrogen supply system, only the containment penetrations for instrument air and service air are safety-related.

Instrument air to Units 1 and 2 is provided by four reciprocating air compressors and two rotary screw compressors located in the turbine area of Unit 1 and one rotary compressor located at the Unit 1 west buttress. Plant service air is provided by two rotary screw compressors located outdoors east of the Unit 2 transformer yard.

The backup air/nitrogen supply system provides compressed gas to safety-related air operated components that are required to perform an active safety-related function after the loss of the compressed air system, as well to a number of nonsafety-related components. The safety-related components which are served by the backup air/nitrogen system include valves for charging/spray capability, steam dump capability, RCS boration sample capability, the RCS power-operated relief valves for overpressure protection, the letdown isolation valves, and fire water containment isolation valves. The backup air/nitrogen supply system also supplies air to the component cooling water valves on the outlet of the residual heat removal heat exchanger and the auxiliary saltwater valves on the inlet of the component cooling water heat exchanger.

System Intended Functions

Portions of the compressed air system provide containment building isolation for instrument air and service air piping penetrations. The backup air/nitrogen supply system provides compressed gas to safety-related air operated components that are required to perform an active safety-related function after the loss of the compressed air system. Therefore, the compressed air system is within the scope of license renewal based on the criteria of 10 CFR 54.4(a)(1).

Some of the compressed air system in the auxiliary building contains nonsafety-related components that are spatially oriented such that their failure could prevent the satisfactory accomplishment of a safety-related function associated with a safety-related component. Therefore, these portions of the compressed air system are in scope as nonsafety-related components affecting safety-related components based on the criterion of 10 CFR 54.4(a)(2).

Portions of the compressed air system support EQ requirements and are within the scope of license renewal based on the criteria of 10 CFR 54.4(a)(3).

FSAR References

Additional details of the compressed air system are included in FSAR Section 9.3.1.

License Renewal Boundary Drawings

The license renewal boundary drawings for the compressed air system are listed below:
LR-DCPP-25-106725-03
LR-DCPP-25-106725-19
LR-DCPP-25-106725-25

LR-DCPP-25-106725-26
LR-DCPP-25-106725-28
LR-DCPP-25-106725-29
LR-DCPP-25-106725-30
LR-DCPP-25-106725-31
LR-DCPP-25-106725-33
LR-DCPP-25-106725-34
LR-DCPP-25-106725-37
LR-DCPP-25-106725-38
LR-DCPP-25-106725-40
LR-DCPP-25-106725-43
LR-DCPP-25-106725-44
LR-DCPP-25-106725-47
LR-DCPP-25-106725-49
LR-DCPP-25-106725-50
LR-DCPP-25-106725-51
LR-DCPP-25-106725-52
LR-DCPP-25-106725-58
LR-DCPP-25-107725-16
LR-DCPP-25-107725-19
LR-DCPP-25-107725-20
LR-DCPP-25-107725-21
LR-DCPP-25-107725-22
LR-DCPP-25-107725-23
LR-DCPP-25-107725-24
LR-DCPP-25-107725-26
LR-DCPP-25-107725-27
LR-DCPP-25-107725-30
LR-DCPP-25-107725-31
LR-DCPP-25-107725-33
LR-DCPP-25-107725-36
LR-DCPP-25-107725-37
LR-DCPP-25-107725-39
LR-DCPP-25-107725-41
LR-DCPP-25-107725-42
LR-DCPP-25-107725-43
LR-DCPP-25-107725-44
LR-DCPP-25-107725-50

Component-Function Relationship Table

The component types subject to AMR are indicated in Table 2.3.3-7 - Compressed Air System.

Table 2.3.3-7 Compressed Air System

Component Type	Intended Function
Closure Bolting	Pressure Boundary Structural Integrity (attached)
Filter	Filter Pressure Boundary
Piping	Leakage Boundary (spatial) Pressure Boundary Structural Integrity (attached)
Regulators	Pressure Boundary
Solenoid Valve	Pressure Boundary
Tank	Leakage Boundary (spatial) Pressure Boundary
Tubing	Pressure Boundary
Valve	Leakage Boundary (spatial) Pressure Boundary

The AMR results for these component types are provided in Table 3.3.2-7, Auxiliary Systems – Summary of Aging Management Evaluation – Compressed Air System.

2.3.3.8 Chemical and Volume Control System

System Description

The chemical and volume control system (CVCS) maintains the required inventory in the RCS by maintaining the programmed water level in the pressurizer through charging and letdown. The CVCS provides a continuous charging and letdown of reactor coolant water which is used in the control of water chemistry conditions, activity level, and soluble chemical neutron absorber concentration. The CVCS also provides seal water injection flow to the reactor coolant pumps. Portions of the system contain borated water at higher concentration than the RCS for use in maintaining reactor shutdown margin.

CVCS consists of three charging pumps. In addition, the system contains a letdown heat exchanger, an excess letdown heat exchanger, a regenerative heat exchanger, a volume control tank, and associated pumps, piping, valves and filters. CVCS also

includes demineralizer vessels and chemical tanks associated with control of water chemistry of the RCS. The system includes provisions for recycling reactor grade water and boric acid.

Portions of the CVCS function as part of the ECCS to provide injection flow to the RCS during post-accident injection and recirculation. The ECCS functions are described in Section 2.3.2.1, Safety Injection System.

System Intended Functions

The CVCS: 1) maintains reactor coolant system pressure boundary, 2) maintains water inventory in the reactor coolant system, 3) varies boron concentration for reactivity control, 4) supplies water to the reactor coolant pump seals for cooling and sealing purposes, 5) provides containment isolation for containment penetrations and 6) provides high-head safety injection pumps for the emergency core cooling system. Therefore, the CVCS is within the scope of license renewal based on the criteria of 10 CFR 54.4(a)(1).

Portions are in scope as nonsafety-related affecting safety-related components based on the criterion of 10 CFR 54.4(a)(2) for structural integrity and spatial interaction of the reactor coolant purification, reactor makeup control and boron recovery subsystems in the containment building and auxiliary building.

Portions of the CVCS support fire protection and EQ requirements and are within the scope of license renewal based on the criteria of 10 CFR 54.4(a)(3).

FSAR References

Additional details of the chemical and volume control system are included in FSAR Section 9.3.4.

License Renewal Boundary Drawings

The license renewal boundary drawings for the chemical and volume control system are listed below:
LR-DCPP-08-106708-02
LR-DCPP-08-106708-03
LR-DCPP-08-106708-04
LR-DCPP-08-106708-05
LR-DCPP-08-106708-06
LR-DCPP-08-106708-07
LR-DCPP-08-106708-08

LR-DCPP-08-106708-09
LR-DCPP-08-106708-10
LR-DCPP-08-106708-11
LR-DCPP-08-106708-11A
LR-DCPP-08-106708-12
LR-DCPP-08-106708-13
LR-DCPP-08-106708-14
LR-DCPP-08-106708-15
LR-DCPP-08-106708-15A
LR-DCPP-08-107708-02
LR-DCPP-08-107708-03
LR-DCPP-08-107708-04
LR-DCPP-08-107708-05
LR-DCPP-08-107708-06
LR-DCPP-08-107708-07
LR-DCPP-08-107708-08
LR-DCPP-08-107708-09
LR-DCPP-08-107708-10
LR-DCPP-08-107708-11
LR-DCPP-08-107708-12
LR-DCPP-08-107708-13
LR-DCPP-08-107708-14
LR-DCPP-08-107708-15
LR-DCPP-08-107708-15A

Component-Function Relationship Table

The component types subject to AMR are indicated in Table 2.3.3-8 - Chemical and Volume Control System.

Table 2.3.3-8 Chemical and Volume Control System

Component Type	Intended Function
Class 1 Piping <= 4in	Pressure Boundary
Closure Bolting	Leakage Boundary (spatial) Pressure Boundary
Demineralizer	Leakage Boundary (spatial) Pressure Boundary
Evaporator	Leakage Boundary (spatial)
Filter	Leakage Boundary (spatial) Pressure Boundary

Table 2.3.3-8 Chemical and Volume Control System (Continued)

Component Type	Intended Function
Flexible Hoses	Leakage Boundary (spatial) Pressure Boundary
Flow Element	Leakage Boundary (spatial) Pressure Boundary Structural Integrity (attached)
Flow Indicator	Structural Integrity (attached)
Gear Box	Pressure Boundary
Heat Exchanger (BA Evaporator/Condenser)	Leakage Boundary (spatial) Structural Integrity (attached) Structural Support
Heat Exchanger (Boric Acid Batching)	Leakage Boundary (spatial)
Heat Exchanger (Boric Acid Distillate)	Leakage Boundary (spatial) Structural Integrity (attached) Structural Support
Heat Exchanger (Boric Acid Evaporator)	Leakage Boundary (spatial) Structural Integrity (attached)
Heat Exchanger (Boric Acid Feed)	Leakage Boundary (spatial)
Heat Exchanger (Boric Acid Vent)	Leakage Boundary (spatial) Structural Integrity (attached) Structural Support
Heat Exchanger (Centrifugal Charging)	Heat Transfer Pressure Boundary
Heat Exchanger (Excess Letdown)	Pressure Boundary
Heat Exchanger (Letdown)	Pressure Boundary
Heat Exchanger (Regenerative Letdown)	Pressure Boundary
Heat Exchanger (Sample Cooler)	Leakage Boundary (spatial) Structural Integrity (attached) Structural Support
Heat Exchanger (Seal Water)	Heat Transfer Pressure Boundary
Heater	Leakage Boundary (spatial) Pressure Boundary
Indicator	Pressure Boundary

Table 2.3.3-8 Chemical and Volume Control System (Continued)

Component Type	Intended Function
Orifice	Leakage Boundary (spatial) Pressure Boundary Structural Integrity (attached) Throttle
Piping	Leakage Boundary (spatial) Pressure Boundary Structural Integrity (attached)
Pulsation Dampener	Leakage Boundary (spatial)
Pump	Leakage Boundary (spatial) Pressure Boundary
Regulators	Structural Integrity (attached)
Sensor Element	Leakage Boundary (spatial)
Sight Gauge	Leakage Boundary (spatial) Pressure Boundary Structural Integrity (attached)
Strainer	Filter, Pressure Boundary
Tank	Leakage Boundary (spatial) Pressure Boundary Structural Integrity (attached)
Test Connection	Leakage Boundary (spatial) Pressure Boundary
Trap	Leakage Boundary (spatial)
Tubing	Leakage Boundary (spatial) Pressure Boundary
Valve	Leakage Boundary (spatial) Pressure Boundary Structural Integrity (attached)
Vessel	Leakage Boundary (spatial)

The AMR results for these component types are provided in Table 3.3.2-8, Auxiliary Systems – Summary of Aging Management Evaluation – Chemical and Volume Control System.

2.3.3.9 Miscellaneous HVAC Systems

System Description

The miscellaneous HVAC systems consist of the following subsystems included within the scope of license renewal: Vital 4 kV switchgear rooms/cable spreading room ventilation, diesel generator rooms ventilation, ASW pump room ventilation, and Technical Support Center (TSC) HVAC.

The Vital 4 kV switchgear rooms/cable spreading room ventilation subsystem is Design Class I. The areas served are the switchgear and cable spreading rooms for the three trains of 4.16 kV switchgear. Each ventilation train consists of a supply fan, supply duct, and a vent stack to the turbine building operating floor. Outside air enters the ventilation equipment room through louvers on the north/south wall of the turbine building. Each fan draws air through a roughing filter integral with the fan and supplies the air through the supply duct to the associated cable spreading and switchgear rooms. The rooms exhaust to the turbine building operating floor without the use of exhaust fans.

The diesel generator ventilation subsystem is Design Class I. Ventilation of diesel generator compartments is accomplished through the use of the same engine-driven fans that provide cooling air to the diesel generator radiators. Each diesel generator is located in a separate compartment in the turbine building. Diesel engine cooling is provided by a closed loop jacket water system with a radiator and a direct engine-driven fan. The ventilation air flow passes through the compartment, cooling the generator and absorbing surface heat losses from the diesel engine. The ventilation air then passes through the radiator and is exhausted outside the compartment by the direct engine-driven fan.

The ASW pump room ventilation subsystem is Design Class I. The purpose of ASW pump ventilation system is to maintain the temperature of the ASW pump motors within acceptable limits during their operation. Each unit is provided with two 100 percent redundant ASW pumps, each of which is installed in a separate watertight compartment. Proper ventilation of these compartments is ensured by providing each supply and exhaust safeguard compartment with a separate ventilation system. Each system consists of a coaxial supply and exhaust safeguard (snorkel) duct and an exhaust fan. The outside air is drawn into the compartment through the outer space of the coaxial (snorkel) ducts. The air passes through the ASW pump motor area and is exhausted to the atmosphere by the in-line exhaust fan through the inner space of the coaxial exhaust (snorkel) duct. The intake and exhaust (snorkel) duct discharge points are located above the highest water level resulting from the combined effects of tsunami and storm wave runup. The outer steel tubular

structure of the coaxial ASW pump room (snorkel) duct is evaluated in Section 2.4.10, Intake Structure and Intake Control Building.

The TSC HVAC subsystem is Design Class II. The TSC is provided with its own HVAC system. During normal operation, all the makeup air and recirculated air passes through a roughing filter and the air conditioning unit. Makeup air in the normal operation mode is supplied by a single makeup air fan. In the radiological accident mode of operation, pressurization air is introduced from a manually operated isolation damper. The pressurization air and a portion of the recirculated air are passed through HEPA and charcoal filters for cleanup purposes. In addition, pressurization air is passed through a duct heater prior to passing through HEPA and charcoal filters.

Other miscellaneous HVAC subsystems that have no license renewal intended functions are listed below:

- Turbine general area HVAC
- 12 kV switchgear rooms
- 480 V non-vital switchgear rooms
- Isolated phase bus area
- Main excitation switchgear
- Non-vital battery rooms
- Condensate polishing area
- Lube oil rooms

System Intended Functions

The miscellaneous HVAC systems remove heat from rooms containing safe shutdown equipment limiting the maximum ambient temperature. Therefore, the miscellaneous HVAC systems are within the scope of license renewal based on the criteria of 10 CFR 54.4(a)(1).

Portions of the miscellaneous HVAC systems are nonsafety-related structurally attached to safety-related components and are in scope of license renewal as nonsafety affecting safety-related components based on the criterion of 10 CFR 54.4(a)(2).

Portions of the miscellaneous HVAC systems support fire protection and SBO requirements and are within the scope of license renewal based on the criteria of 10 CFR 54.4(a)(3).

FSAR References

Additional details of the miscellaneous HVAC systems are included in FSAR Sections 9.4.6, 9.4.7, 9.4.8, and 9.4.11.

License Renewal Boundary Drawings

The license renewal boundary drawings for the miscellaneous HVAC systems are listed below:
LR-DCPP-23-106723-17
LR-DCPP-23-106723-18
LR-DCPP-23-106723-19
LR-DCPP-23-107723-17
LR-DCPP-23-107723-19

Component-Function Relationship Table

The component types subject to AMR are indicated in Table 2.3.3-9 - Miscellaneous HVAC Systems.

Table 2.3.3-9 Miscellaneous HVAC Systems

Component Type	Intended Function
Closure Bolting	Pressure Boundary Structural Integrity (attached)
Compressor	Structural Support
Damper	Fire Barrier Pressure Boundary Structural Integrity (attached) Structural Support
Ductwork	Pressure Boundary Structural Integrity (attached) Structural Support
Fan	Pressure Boundary Structural Support
Filter	Structural Support
Flex Connectors	Pressure Boundary

Table 2.3.3-9 Miscellaneous HVAC Systems (Continued)

Component Type	Intended Function
Heat Exchanger (Turbine Building)	Leakage Boundary (spatial) Structural Support
Heater	Structural Support
Piping	Pressure Boundary Structural Support
Tubing	Leakage Boundary (spatial) Structural Support
Valve	Pressure Boundary Structural Integrity (attached) Structural Support

The AMR results for these component types are provided in Table 3.3.2-9, Auxiliary Systems – Summary of Aging Management Evaluation – Miscellaneous HVAC Systems.

2.3.3.10 Control Room HVAC System

System Description

The purpose of the control room HVAC system is to provide ventilation, cooling, and protection for personnel and equipment in the control room under the following conditions:

- Normal operation
- Smoke, fire, or toxic gas in the control room
- Smoke or toxic gas outside the control room
- Radioactive gases or particulates inside or outside the control room.

The control room ventilation system encompasses three systems. These are:

- control room HVAC system
- control room pressurization system (CRPS)

- The plant process computer room air conditioning system (The plant process computer room air conditioning system has no safety-related functions.)

The control room HVAC system serves the Unit 1 and Unit 2 control room (common area), shift manager's office (Unit 1), crew briefing room (Unit 2), instrument safeguard room (SSPS Room), plant process computer room, kitchen area (Unit 1), lavatory area (Unit 2), the 154-ft elevation of the auxiliary building (mechanical equipment room) via pressure equalization damper and the Technical Support Center when it is in operation and the control room ventilation system is in pressurization mode. The control room is provided with minimum leakage dampers, weather-stripped doors and door vestibules.

The Unit 1 and Unit 2 control room HVAC systems consist of similar equipment located mainly on the 154-ft elevation of the auxiliary building on both the Unit 1 and Unit 2 side. The TSC is located on the 104-ft elevation of the turbine building.

The main crosstie for the system is the control room itself, since both systems supply the common area. The pressurization systems are also cross tied at their discharge.

The major components in the control room HVAC system are supply fans, cooling coils, exhaust fans, filter booster fans, filter units, filter unit pre-heaters, pressurization fans, refrigeration units, louver isolation plates and associated ducts and dampers.

The control room HVAC and CRPS are mechanically and operationally interconnected. The control room HVAC either singly, or in conjunction with the CRPS, supports the operation of the control room and its contained equipment during all normal operating modes and following accidents that result in airborne radioactivity requiring long-term occupancy of the control room. In the post-accident mode, the control room and mechanical equipment room are isolated and pressurized by the CRPS. Makeup air is passed through HEPA and charcoal filters from a low activity region to maintain radiation and chemical exposures within regulatory limits.

System Intended Functions

The control room HVAC system serves to pressurize the control room and thus provide adequate radiation protection for both equipment and personnel in the control room, by limiting radiation exposure to the 10 CFR 50 Appendix A (GDC 19) limits and to maintain the control room atmosphere within the limits of Regulatory Guide 1.78 during a chemical release from an on-site source. The system maintains

the control room atmosphere temperature within limits such that long-term degradation of the contained equipment and instrumentation will not result. The system provides makeup air from a remote source during accident conditions to provide control room pressurization. Therefore, the control room HVAC system is within the scope of license renewal based on the criteria of 10 CFR 54.4(a)(1).

Portions of the control room HVAC system are in scope of license renewal as nonsafety affecting safety-related components based on the criterion of 10 CFR 54.4(a)(2) based on structural integrity and for leakage boundary function.

Portions of the control room HVAC system support EQ, fire protection and SBO requirements and are within the scope of license renewal based on the criteria of 10 CFR 54.4(a)(3).

FSAR References

Additional details of the control room HVAC system are included in FSAR Section 9.4.1.

License Renewal Boundary Drawings

The license renewal boundary drawings for the control room HVAC system are listed below:
LR-DCPP-23F-106723-16
LR-DCPP-23F-107723-16

Component-Function Relationship Table

The component types subject to AMR are indicated in Table 2.3.3-10 – Control Room HVAC System.

Table 2.3.3-10 Control Room HVAC System

Component Type	Intended Function
Closure Bolting	Pressure Boundary Structural Integrity (attached)
Compressor	Pressure Boundary
Damper	Fire Barrier Pressure Boundary
Ductwork	Pressure Boundary
Fan	Pressure Boundary Structural Integrity (attached)

Table 2.3.3-10 Control Room HVAC System (Continued)

Component Type	Intended Function
Filter	Pressure Boundary
Flex Connectors	Pressure Boundary
Flow Element	Pressure Boundary
Heat Exchanger (Control Room HVAC)	Heat Transfer Pressure Boundary
Piping	Pressure Boundary
Sight Gauge	Pressure Boundary
Solenoid Valve	Pressure Boundary
Thermowell	Pressure Boundary
Tubing	Leakage Boundary (spatial) Structural Integrity (attached)
Valve	Pressure Boundary Structural Integrity (attached)

The AMR results for these component types are provided in Table 3.3.2-10, Auxiliary Systems – Summary of Aging Management Evaluation – Control Room HVAC System.

2.3.3.11 Auxiliary Building HVAC System

System Description

The primary purpose of the auxiliary building heating and ventilation system is to maintain the temperature of the ESF pump motors within acceptable limits during their operation. The secondary purpose of this system is to provide heating and ventilation to the auxiliary building. The system also provides a flowpath that serves as a portion of one train of the containment hydrogen purge system.

The auxiliary building HVAC system consists of the following systems:

- Main auxiliary building HVAC
- Miscellaneous auxiliary building HVAC

- Fuel handling area heating and ventilation system

Main Auxiliary Building HVAC

The main auxiliary building HVAC system provides outside air supply for the auxiliary building under all operating conditions and heating during normal plant operation when required. It also serves its primary purpose of providing cooling air for the ESF pump motors. The supply system consists of two full capacity fans (each powered from a separate vital bus), roughing filters, steam heating coils, and duct work for distribution. The exhaust system consists of two full capacity fans (each powered from a separate vital bus), two full capacity combined roughing and HEPA filter banks, one full capacity combined electric heater, roughing, HEPA and charcoal filter bank, and exhaust duct network. The containment hydrogen purge line connects to the inlet plenum for the filter bank containing the charcoal filter.

Miscellaneous Auxiliary Building HVAC Systems

The miscellaneous auxiliary building HVAC systems consist of 11 subsystems. Those subsystems within the scope of license renewal are summarized below.

- 480 VAC switchgear and 125 VDC inverter rooms ventilation system
- Access control area HVAC system
- Post-accident sampling room ventilation

The 125 VDC and 480 VAC switchgear area ventilation system serves the following electrical areas: 125 VDC switchgear and battery chargers, 480 VAC switchgear, hot shutdown remote control panel, and Hagan rack area in the cable spreading room. The system consists of two sets of redundant 100 percent capacity supply and exhaust fans, a common supply and exhaust duct, dampers, air outlets and inlets, and fire dampers.

In Unit 1, outside air is drawn by one of the two redundant supply fans, discharging through a common supply ductwork and roughing filter and introduced to each area by supply registers. The Unit 2 configuration is the same except that the filter is located at the inlet side of the fans. Exhaust air from each area is drawn by one of the two redundant exhaust fans and discharged to the atmosphere. The system intake louver is located in the intake plenum and the exhaust air is discharged away from the supply air intake. The supply duct is routed from the supply fans at the roof of the auxiliary building, penetrating the turbine building siding, then down along the

wall outside the auxiliary building where it then enters the auxiliary building in the DC switchgear area.

The access control area HVAC system is a combination of once-through and recirculation type climate control system. The system is not safety-related. The major components of the access control area HVAC system are three air handling units which are Design Class II equipment.

The major components of the post accident sampling room ventilation system are a set of redundant pressurization and exhaust fans and a self-contained climate control unit. These components are not safety-related and are Design Class II equipment.

Fuel Handling Area Heating and Ventilation System

The purpose of the fuel handling area heating and ventilation system is to sweep radiolytic gases from the surface of the spent fuel pool and to treat the exhaust air in order to remove radioactive iodine. The system consists of redundant supply and exhaust fans, and redundant HEPA and charcoal filter banks. A third set of full capacity exhaust fans and HEPA filter bank trains is provided for normal operation. Each HEPA filter bank is preceded by a roughing filter bank. The heating coil is used to temper the air that is supplied to the area. The supply air is ducted to corridors and equipment compartments on the floor levels below the operating level.

System Intended Functions

The safety-related functions of the auxiliary building HVAC system are to provide for the maintenance of vital auxiliaries to support critical functions by providing ventilation exhaust to the areas and rooms containing safety-related equipment that is required to be operable to mitigate the consequences of certain design basis accident conditions and to prevent indirect radioactive release to the atmosphere during normal plant operation and in the event of leakage from the residual heat removal circulation loop following a LOCA.

The function of the fuel handling area heating and ventilation system is to reduce the release of airborne radioactive materials to the environment resulting from postulated fuel handling accidents. In the event that fuel assembly damage occurs and results in the release of radioactive materials to the atmosphere of the fuel handling building, the system reduces the offsite dose by adsorbing a portion of the airborne iodine in the FHB exhaust prior to discharge to the environment and maintaining the spent fuel pool area at negative pressure (with respect to outdoor atmospheric conditions) to prevent the release of airborne iodine to the environment

through unfiltered release paths. Additionally, the system provides ventilation cooling to support operability and operation of the safety-related motor driven auxiliary feedwater pumps, makeup water transfer pumps, and spent fuel pool pumps.

As a result of the above functions, the auxiliary building HVAC system is within the scope of license renewal based on the criteria of 10 CFR 54.4(a)1.

Portions of the auxiliary building HVAC system are nonsafety structurally attached to safety-related components and are in scope of license renewal as nonsafety affecting safety-related components based on the criterion of 10 CFR 54.4(a) 2.

Portions of the auxiliary building HVAC system support EQ, fire protection, and SBO requirements and are within the scope of license renewal based on the criteria of 10 CFR 54.4(a)3.

FSAR References

Additional details of the auxiliary building HVAC system are included in FSAR Sections 9.4.2, 9.4.4, and 9.4.9.

License Renewal Boundary Drawings

The license renewal boundary drawings for the auxiliary building HVAC system are listed below:
LR-DCPP-23B-106723-03
LR-DCPP-23B-106723-05
LR-DCPP-23B-106723-07
LR-DCPP-23B-106723-08
LR-DCPP-23B-106723-09
LR-DCPP-23B-106723-10
LR-DCPP-23B-106723-11
LR-DCPP-23B-106723-12
LR-DCPP-23B-106723-13
LR-DCPP-23B-106723-15
LR-DCPP-23B-107723-03
LR-DCPP-23B-107723-05
LR-DCPP-23B-107723-07
LR-DCPP-23B-107723-08
LR-DCPP-23B-107723-09
LR-DCPP-23B-107723-10
LR-DCPP-23B-107723-11

LR-DCPP-23B-107723-12
LR-DCPP-23B-107723-13

Component-Function Relationship Table

The component types subject to AMR are indicated in Table 2.3.3-11 - Auxiliary Building HVAC System.

Table 2.3.3-11 Auxiliary Building HVAC System

Component Type	Intended Function
Closure Bolting	Leakage Boundary (spatial) Pressure Boundary Structural Integrity (attached)
Damper	Fire Barrier Pressure Boundary Structural Integrity (attached) Structural Support
Ductwork	Pressure Boundary Structural Integrity (attached) Structural Support
Fan	Pressure Boundary Structural Integrity (attached) Structural Support
Filter	Leakage Boundary (spatial) Pressure Boundary Structural Support
Flex Connectors	Pressure Boundary
Flexible Hoses	Leakage Boundary (spatial)
Flow Element	Pressure Boundary Structural Integrity (attached)
Heat Exchanger (Access Control HVAC)	Leakage Boundary (spatial)
Heat Exchanger (Aux Bldg HVAC)	Leakage Boundary (spatial)
Heat Exchanger (Fuel Handling Bldg HVAC)	Leakage Boundary (spatial)
Heat Exchanger (Post LOCA Room Chiller Condenser)	Leakage Boundary (spatial)
Orifice	Leakage Boundary (spatial)
Piping	Leakage Boundary (spatial)
Pump	Leakage Boundary (spatial)

Table 2.3.3-11 Auxiliary Building HVAC System (Continued)

Component Type	Intended Function
Sight Gauge	Leakage Boundary (spatial)
Strainer	Leakage Boundary (spatial)
Test Connection	Leakage Boundary (spatial) Structural Integrity (attached)
Trap	Structural Integrity (attached)
Tubing	Leakage Boundary (spatial) Pressure Boundary
Valve	Leakage Boundary (spatial) Pressure Boundary Structural Integrity (attached)

The AMR results for these component types are provided in Table 3.3.2-11, Auxiliary Systems – Summary of Aging Management Evaluation – Auxiliary Building HVAC System.

2.3.3.12 Fire Protection System

System Description

The purpose of the fire protection system is to minimize the effects of fire on plant SSCs important to safety to the extent that a fire will not compromise the ability to achieve safe shutdown of the plant.

The fire protection system consists of a 300,000 gallon storage tank, two motor-driven fire water pumps, hydrants, hose stations, underground power block loop, an interconnected fire water distribution system within the turbine, auxiliary, and containment buildings, wet-pipe sprinklers, deluge valves, carbon dioxide systems, post indicating valves, and piping. The safety-related components at the containment penetration are included in this system. The 5,000,000 gallon raw water storage reservoir pressurizes the outdoor fire water loop via gravity fed piping to plant grade.

The fire detection and actuation portion of the system is evaluated as part of the Electrical and I&C evaluations. Fire dampers are evaluated as part of the assigned HVAC systems. The raw water storage reservoir is evaluated as part of the

Earthwork and Yard Structures in Section 2.4.11. Other passive fire barriers are evaluated as part of the Structures evaluations in Section 2.4.

System Intended Functions

The fire protection system provides containment isolation for a containment penetration and is therefore within the scope of license renewal based on the criteria of 10 CFR 54.4(a)(1).

Portions of the fire protection system are in scope as nonsafety affecting safety-related components based on the criterion of 10 CFR 54.4(a)(2).

Portions of the fire protection system support fire protection requirements and are within the scope of license renewal based on the criteria of 10 CFR 54.4(a)(3).

FSAR References

Additional details of the fire protection system are included in FSAR Section 9.5.1.

License Renewal Boundary Drawings

The license renewal boundary drawings for the fire protection system are listed below:
LR-DCPP-18-106718-02
LR-DCPP-18-106718-03
LR-DCPP-18-106718-04
LR-DCPP-18-106718-05
LR-DCPP-18-106718-06
LR-DCPP-18-106718-07
LR-DCPP-18-106718-08
LR-DCPP-18-106718-09
LR-DCPP-18-106718-10
LR-DCPP-18-106718-11
LR-DCPP-18-106718-12
LR-DCPP-18-106718-13
LR-DCPP-18-106718-14
LR-DCPP-18-106718-15
LR-DCPP-18-106718-16

Component-Function Relationship Table

The component types subject to AMR are indicated in Table 2.3.3-12 - Fire Protection System.

Table 2.3.3-12 Fire Protection System

Component Type	Intended Function
Bellows	Pressure Boundary
Closure Bolting	Pressure Boundary
Flow Element	Pressure Boundary
Flow Indicator	Pressure Boundary
Hose Station	Pressure Boundary
Hydrant	Pressure Boundary
Orifice	Pressure Boundary
Piping	Leakage Boundary (spatial) Pressure Boundary
Pump	Pressure Boundary
RCP Oil Collection Reservoir	Pressure Boundary
Solenoid Valve	Pressure Boundary
Spray Nozzle	Spray
Strainer	Pressure Boundary
Tank	Pressure Boundary Structural Support
Test Connection	Pressure Boundary
Trailer	Structural Support
Tubing	Leakage Boundary (spatial) Pressure Boundary
Valve	Pressure Boundary
Vessel	Pressure Boundary

The AMR results for these component types are provided in Table 3.3.2-12, Auxiliary Systems – Summary of Aging Management Evaluation – Fire Protection System.

2.3.3.13 Diesel Generator Fuel Oil System

System Description

The purpose of the diesel generator fuel oil system is to provide fuel oil for the emergency diesel generators. The system consists of two underground fuel oil storage tanks, transfer pumps to transport the fuel oil to the diesel generator day tanks, piping, valves, and instrumentation for each of two redundant trains providing fuel for the diesel generators. Each train is common to both units and can supply fuel oil to any of the three diesel generators in each unit. The two transfer pumps are housed in separate underground reinforced concrete vaults, located below grade west of the turbine building, with solid steel covers. These vaults are evaluated in Section 2.4.7. The fuel oil supply headers run along the west side of the turbine building and are in separate below-ground reinforced concrete pipe trenches with solid steel or concrete covers flush at ground level.

The fuel oil transfer system is designed to replenish diesel generator day tanks from the underground fuel oil storage tanks to ensure onsite power is available following a design basis accident. The day tanks are evaluated with the diesel generator system in Section 2.3.3.14.

System Intended Functions

The diesel generator fuel oil system provides onsite storage and delivery of fuel oil for the operation of the six emergency diesel generators. Therefore, the diesel generator fuel oil system is within the scope of license renewal based on the criteria of 10 CFR 54.4(a)(1).

Portions of the diesel generator fuel oil system are in scope as nonsafety-related affecting safety-related components due to spatial interactions based on the criterion of 10 CFR 54.4(a)(2).

Portions of the diesel generator fuel oil system support SBO and fire protection requirements and are within the scope of license renewal based on the criteria of 10 CFR 54.4(a)(3).

FSAR References

Additional details of the diesel generator fuel transfer system are included in FSAR Section 9.5.4.

License Renewal Boundary Drawings

The license renewal boundary drawing for the diesel generator fuel transfer system is listed below:
LR-DCPP-21B-106721-02

Component-Function Relationship Table

The component types subject to AMR are indicated in Table 2.3.3-13 - Diesel Generator Fuel Oil System.

Table 2.3.3-13 Diesel Generator Fuel Oil System

Component Type	Intended Function
Closure Bolting	Pressure Boundary
Expansion Joint	Pressure Boundary
Filter	Pressure Boundary
Flexible Hoses	Pressure Boundary
Piping	Leakage Boundary (spatial) Pressure Boundary Structural Integrity (attached)
Pump	Pressure Boundary
Strainer	Filter Pressure Boundary
Tank	Pressure Boundary
Tubing	Pressure Boundary
Valve	Leakage Boundary (spatial) Pressure Boundary

The AMR results for these component types are provided in Table 3.3.2-13, Auxiliary Systems – Summary of Aging Management Evaluation – Diesel Generator Fuel Oil System.

2.3.3.14 Diesel Generator System

System Description

The diesel generator system is designed as a standby power source to provide power to the 4.16 kV bus for the operation of emergency systems and engineered safety features during and following the shutdown of the reactor when the offsite power sources are not available. Each diesel generator unit consists of a self-contained diesel engine directly connected to an alternating current generator, and the separate accessories needed for proper operation are all mounted on a common structural steel skid-type base. Each diesel generator is physically isolated from each other and from other equipment enclosed within its own compartment inside the turbine building.

There are a total of six diesel generators, three for each unit. Since two of the three 4.16 kV AC buses are required for safe shutdown of a unit, this configuration ensures that two diesel generator sets and two vital buses are available in the event of a single failure of a diesel generator set in each unit.

Each diesel generator system has the following subsystems associated with it: diesel fuel oil system, engine fuel oil system, starting system, combustion air intake and ventilation system, cooling system, and lubricating oil system. The diesel generator fuel oil system is evaluated in Section 2.3.3.13.

Engine Fuel Oil System

Each diesel generator has an independent engine fuel oil system that stores a limited amount of fuel oil and supplies that set with fuel oil on demand. Each engine has its own fuel oil day tank that holds a nominal volume of 550 gallons. Each diesel engine has an engine driven booster pump taking suction from the day tank through primary and secondary filters supplying fuel oil to a header delivering fuel oil to the injection pumps. Each cylinder has its own injection pump and injector. Each engine is provided with a head tank to ensure that as an engine is started, the fuel oil header is primed and has a supply of fuel oil for prompt firing of the engine. To ensure the head tank remains full, each engine is provided with a magnetic drive makeup pump. A fuel oil hand-operated pump is also included in parallel to the magnetic drive makeup pump and can also be used to fill the head tank. The boundary of the engine fuel oil system begins on the upstream end of the manual isolation valves preceding the normally closed level control valves leading to each engine's day tank.

Starting System

Each diesel engine is provided with two separate and redundant air-start systems. Normally two trains operate together in combination with the turbocharger air assist system to ensure that the engine generator set starts and accelerates to rated speed and minimum bus voltage in the required time. The starting system consists of an air receiver, air compressors, air-starting motors, piping, valves, and controls. Each diesel engine is also equipped with an engine turbocharger boost system to provide extra air to the engine to improve combustion during acceleration. The turbocharger boost system consists of an air compressor, an air receiver, piping, valves, and controls. Portions of both the starting system and turbocharger boost system are nonsafety-related upstream of the check valve connecting to the receiver tank.

Combustion Air Intake and Ventilation System

This system is designed to supply normal engine combustion air and direct engine exhaust to the atmosphere. The system consists of an air intake filter, intake silencer, exhaust silencer, piping, and valves. Combustion air is taken into the engine through dry-type particulate filter media encased in a steel body. The air is then drawn into the engine through 22-in. piping. Exhaust gases are sent through the turbocharger to an exhaust silencer, and then out to atmosphere. The location of the exhaust points were determined based on eliminating any possibility of exhaust gases being reintroduced into the diesel air intakes.

Cooling System

A jacket water cooling system is provided for each of the six diesel engines. The engine generator skid has an integrally mounted radiator with a direct engine driven fan for cooling the engine. Cooling air is drawn from the outside through the radiator core. Engine jacket water is circulated by a jacket water pump directly driven by the engine. Lubricating oil is cooled by the jacket water by a shell and tube heat exchanger. While the engine is in a shutdown condition, immersion heaters keep the jacket water warm for fast starting. The cooling system is self contained.

Lubricating Oil System

The lubricating oil system for each engine is entirely mounted on the engine's baseplate. Lubricating oil is drawn from the crankcase through a pump and oil filter during engine operation. The oil is then cooled by the jacket water-cooled heat exchanger and returned to the engine bearings via a duplex strainer. When the engine is idle, oil is continually circulated by a precirculating pump.

System Intended Functions

The diesel generator system provides onsite emergency AC power for maintaining vital auxiliaries, powering safety-related equipment that acts to shutdown the reactor and maintain it in a safe shutdown condition. Therefore, the diesel generator system is within the scope of license renewal based on the criteria of 10 CFR 54.4(a)(1).

Portions of the diesel generator system are in scope as nonsafety-related affecting safety-related components based on the criterion of 10 CFR 54.4(a)(2) due to spatial interaction and structural integrity.

Portions of the diesel generator system support fire protection and SBO requirements and are within the scope of license renewal based on the criteria of 10 CFR 54.4(a)(3).

FSAR References

Additional details of the diesel generator system are included in FSAR Sections 8.3.1.1.8, 8.3.1.1.13, and 9.5.4.

License Renewal Boundary Drawings

The license renewal drawings for the diesel generator system are listed below:
LR-DCPP-21-106721-02
LR-DCPP-21-106721-03
LR-DCPP-21-106721-04
LR-DCPP-21-106721-05
LR-DCPP-21-106721-06
LR-DCPP-21-106721-07
LR-DCPP-21-106721-08
LR-DCPP-21-106721-09
LR-DCPP-21-106721-10
LR-DCPP-21-106721-11
LR-DCPP-21-106721-12
LR-DCPP-21-106721-13
LR-DCPP-21-106721-14
LR-DCPP-21-106721-15
LR-DCPP-21-106721-16
LR-DCPP-21-106721-17
LR-DCPP-21-107721-03
LR-DCPP-21-107721-04
LR-DCPP-21-107721-05

LR-DCPP-21-107721-06
LR-DCPP-21-107721-07
LR-DCPP-21-107721-08
LR-DCPP-21-107721-09
LR-DCPP-21-107721-10
LR-DCPP-21-107721-11
LR-DCPP-21-107721-12
LR-DCPP-21-107721-13
LR-DCPP-21-107721-14
LR-DCPP-21-107721-15
LR-DCPP-21-107721-16
LR-DCPP-21-107721-17

Component-Function Relationship Table

The component types subject to AMR are indicated in Table 2.3.3-14 - Diesel Generator System.

Table 2.3.3-14 Diesel Generator System

Component Type	Intended Function
Bellows	Pressure Boundary
Closure Bolting	Pressure Boundary
Compressor	Structural Integrity (attached)
Fan	Pressure Boundary
Filter	Pressure Boundary Structural Integrity (attached)
Flexible Hoses	Leakage Boundary (spatial) Pressure Boundary
Gear Box	Pressure Boundary
Heat Exchanger (DG Jacket Water)	Heat Transfer Pressure Boundary
Heat Exchanger (DG Lube Oil)	Heat Transfer Pressure Boundary
Heat Exchanger (DG Turbo Air Intercooler)	Heat Transfer Pressure Boundary
Heater	Leakage Boundary (spatial)
Lubricator	Pressure Boundary

Table 2.3.3-14 Diesel Generator System (Continued)

Component Type	Intended Function
Orifice	Pressure Boundary Throttle
Piping	Leakage Boundary (spatial) Pressure Boundary
Pump	Leakage Boundary (spatial) Pressure Boundary Structural Integrity (attached)
Regulators	Pressure Boundary
Sight Gauge	Pressure Boundary
Silencer	Pressure Boundary
Solenoid Valve	Pressure Boundary
Sprinkler Head	Pressure Boundary
Strainer	Filter Pressure Boundary
Tank	Pressure Boundary
Thermowell	Pressure Boundary
Tubing	Pressure Boundary
Turbine	Pressure Boundary
Valve	Leakage Boundary (spatial) Pressure Boundary

The AMR results for these component types are provided in Table 3.3.2-14, Auxiliary Systems – Summary of Aging Management Evaluation – Diesel Generator System.

2.3.3.15 Lube Oil System

System Description

The purpose of the lube oil system is to provide oil for operation of the feedwater pump turbine, main turbine-generator and several large motor-driven pumps that represent both vital auxiliaries and steam and power plant auxiliaries. Safety-related portions of the lube oil system provide the normal and emergency source of lubrication to the component cooling water (CCW) system, which is designed to

remove heat from various vital and non-vital auxiliary components during normal and accident conditions.

Portions of the lube oil system that serve CCW system pumps are located in the auxiliary building and portions of the lube oil system that are required to trip the main turbine in an ATWS event are located in the turbine building.

For portions of the lube oil system that provide for tripping the main turbine under ATWS, it has been determined that no passive mechanical components are relied upon to perform this function.

System Intended Functions

Portions of the lube oil system provide the normal and emergency source of lubrication to the CCW system, which is designed to remove heat from various vital auxiliary components during normal and accident conditions. Therefore, the lube oil system is within the scope of license renewal based on the criteria of 10 CFR 54.4(a)(1).

Portions of the lube oil system support ATWS requirements and are within the scope of license renewal based on the criteria of 10 CFR 54.4(a)(3).

FSAR References

Additional details of the lube oil system are included in FSAR Sections 7.6.1.4, 9.2.2, 10.2.2.2 and Figure 3.2-20.

License Renewal Boundary Drawings

The license renewal boundary drawings for the lube oil system are listed below:
LR-DCPP-20-106720-12
LR-DCPP-20-107720-12

Component-Function Relationship Table

The component types subject to AMR are indicated in Table 2.3.3-15 – Lube Oil System.

Table 2.3.3-15 Lube Oil System

Component Type	Intended Function
Closure Bolting	Pressure Boundary
Filter	Filter Pressure Boundary
Flow Indicator	Pressure Boundary
Piping	Pressure Boundary
Pump	Pressure Boundary
Sight Gauge	Pressure Boundary
Tank	Pressure Boundary
Valve	Pressure Boundary

The AMR results for these component types are provided in Table 3.3.2-15, Auxiliary Systems – Summary of Aging Management Evaluation – Lube Oil System.

2.3.3.16 Gaseous Radwaste System

System Description

The gaseous radwaste system collects, stores, and releases radioactive gaseous wastes that are generated during plant operation. The waste gases are stored until the radioactivity has decayed to acceptable levels and then released to the environment.

The waste gases are collected by a vent header system from various primary and auxiliary systems. Each unit has a vent header network and surge tank. Gases collected by the vent header system are routed to a surge tank equipped with a safety relief valve to prevent overpressurization. Each unit's surge tank feeds that unit's waste gas compressor and/or a shared spare compressor through a pressure control valve. The compressor discharge is routed through a moisture separator into a network of valves feeding the gas decay tanks. These tanks are provided for the holdup of radioactive gases prior to release to the environment through a flow control valve and a radiation monitor.

Specific portions of the gaseous radwaste system form part of the safety-related pressure boundary of the component cooling water system.

System Intended Functions

Portions of the gaseous radwaste system form part of the safety-related pressure boundary of the component cooling water system and are within the scope of license renewal based on the criteria of 10 CFR 54.4(a)(1).

Portions of the gaseous radwaste system are in scope as nonsafety affecting safety-related components based on the criterion of 10 CFR 54.4(a)(2) due to spatial interaction and structural integrity.

FSAR References

Additional details of the gaseous radwaste system are included in FSAR Sections 9.2.2, 11.3, and Table 11.3-1.

License Renewal Boundary Drawings

The license renewal boundary drawings for the gaseous radwaste system are listed below:
LR-DCPP-24-106724-02
LR-DCPP-24-106724-03
LR-DCPP-24-106724-04
LR-DCPP-24-106724-05
LR-DCPP-24-106724-06

Component-Function Relationship Table

The component types subject to AMR are indicated in Table 2.3.3-16 – Gaseous Radwaste System.

Table 2.3.3-16 Gaseous Radwaste System

Component Type	Intended Function
Closure Bolting	Leakage Boundary (spatial) Pressure Boundary Structural Support
Compressor	Leakage Boundary (spatial) Structural Support
Heat Exchanger (Waste Gas Compressor Seal Cooler)	Leakage Boundary (spatial) Structural Integrity (attached)

Table 2.3.3-16 Gaseous Radwaste System (Continued)

Component Type	Intended Function
Instrument	Leakage Boundary (spatial)
Instrument Bellows	Leakage Boundary (spatial) Structural Support
Orifice	Leakage Boundary (spatial) Structural Integrity (attached) Structural Support
Piping	Leakage Boundary (spatial) Structural Integrity (attached) Structural Support
Sensor Element	Leakage Boundary (spatial)
Separator	Leakage Boundary (spatial)
Sight Gauge	Leakage Boundary (spatial)
Strainer	Leakage Boundary (spatial)
Tank	Leakage Boundary (spatial) Structural Integrity (attached) Structural Support
Test Connection	Leakage Boundary (spatial)
Tubing	Leakage Boundary (spatial) Structural Support
Valve	Leakage Boundary (spatial) Pressure Boundary Structural Integrity (attached) Structural Support

The AMR results for these component types are provided in Table 3.3.2-16, Auxiliary Systems – Summary of Aging Management Evaluation – Gaseous Radwaste System.

2.3.3.17 Liquid Radwaste System

System Description

The liquid radwaste system (LRS) collects and processes the radioactive liquid wastes generated during plant operation. Prior to discharge, the LRS processes this waste to reduce the activity to environmentally acceptable levels. The system is

designed to minimize dose to plant personnel and the general public in accordance with NRC regulations. Units 1 and 2 share a common LRS, except for equipment located inside containment. The common waste system consists of the following subsystems:

- Equipment drain subsystem
- Floor drain subsystem
- Chemical drain subsystem
- Laundry and hot shower and laundry/distillate subsystem
- Demineralizer regenerant subsystem

Following treatment, effluents from the LRS are released to the environment at either of the units' circulating water system discharge structures via the auxiliary saltwater system. The waste liquid releases are diluted in the auxiliary saltwater system and main circulating water system flows. Releases are initiated by plant operators, continuously monitored, and are automatically isolated in the event of a high radiation alarm or a power failure.

System Intended Functions

The liquid radwaste system is relied upon to support the critical safety function of containment integrity. There are valves and piping within the liquid radwaste system that function to provide containment isolation. Therefore, portions of the liquid radwaste system are within the scope of license renewal based on the criteria of 10 CFR 54.4(a)(1).

The liquid radwaste system contains nonsafety-related components that are spatially oriented such that their failure could prevent the satisfactory accomplishment of a safety-related function associated with a safety-related component. Also, portions of the safety-related liquid radwaste system attach to nonsafety-related piping such that the structural failure of the nonsafety-related piping could prevent satisfactory accomplishment of safety-related system functions. These portions of the liquid radwaste system are in scope as nonsafety affecting safety-related components based on the criterion of 10 CFR 54.4(a)(2).

Portions of the liquid radwaste system support fire protection and EQ requirements and are within the scope of license renewal based on criteria of 10 CFR 54.4(a)(3).

FSAR References

Additional details of the liquid radwaste system are included in FSAR Sections 9.3.3, 11.2, and Tables 6.2-39 and 9.5B-1.

License Renewal Boundary Drawings

The license renewal boundary drawings for the liquid radwaste system are listed below:
LR-DCPP-06-106706-07
LR-DCPP-07-106707-04
LR-DCPP-07-107707-04
LR-DCPP-11-106711-07
LR-DCPP-11-107711-04
LR-DCPP-11-107711-05
LR-DCPP-14-106714-06
LR-DCPP-14-107714-07
LR-DCPP-16-106716-18
LR-DCPP-19-106719-02
LR-DCPP-19-106719-03
LR-DCPP-19-106719-04
LR-DCPP-19-106719-05
LR-DCPP-19-106719-06
LR-DCPP-19-106719-07
LR-DCPP-19-106719-08
LR-DCPP-19-106719-09
LR-DCPP-19-106719-10
LR-DCPP-19-106719-11
LR-DCPP-19-106719-12
LR-DCPP-19-106719-13
LR-DCPP-19-106719-14
LR-DCPP-19-106719-17
LR-DCPP-19-106719-18

Component-Function Relationship Table

The component types subject to AMR are indicated in Table 2.3.3-17 – Liquid Radwaste System.

Table 2.3.3-17 Liquid Radwaste System

Component Type	Intended Function
Caulking & Sealant	Pressure Boundary
Closure Bolting	Leakage Boundary (spatial) Pressure Boundary Structural Integrity (attached)
Demineralizer	Leakage Boundary (spatial)
Filter	Leakage Boundary (spatial)
Flame Arrestor	Pressure Boundary
Flow Element	Leakage Boundary (spatial) Structural Integrity (attached)
Flow Indicator	Leakage Boundary (spatial) Pressure Boundary Structural Integrity (attached)
Heat Exchanger (Waste Concentrator)	Leakage Boundary (spatial) Structural Integrity (attached)
Heater	Leakage Boundary (spatial)
Instrument Bellows	Leakage Boundary (spatial)
Orifice	Leakage Boundary (spatial)
Piping	Leakage Boundary (spatial) Pressure Boundary Structural Integrity (attached)
Pump	Leakage Boundary (spatial) Pressure Boundary Structural Integrity (attached)
Sample Cooler	Leakage Boundary (spatial) Structural Integrity (attached)
Sight Gauge	Leakage Boundary (spatial)
Strainer	Filter, Leakage Boundary (spatial)
Tank	Leakage Boundary (spatial) Structural Integrity (attached)
Tank(RCP Lube Oil Collection)	Pressure Boundary
Test Connection	Leakage Boundary (spatial)

Table 2.3.3-17 Liquid Radwaste System (Continued)

Component Type	Intended Function
Trap	Leakage Boundary (spatial)
Tubing	Leakage Boundary (spatial) Pressure Boundary
Valve	Leakage Boundary (spatial) Pressure Boundary Structural Integrity (attached)
Vessel	Leakage Boundary (spatial)

The AMR results for these component types are provided in Table 3.3.2-17, Auxiliary Systems – Summary of Aging Management Evaluation – Liquid Radwaste System.

2.3.3.18 Miscellaneous Systems In Scope ONLY for Criterion 10 CFR 54.4(a)(2)

Systems within the scope of license renewal based upon the criterion of 10 CFR 54.4(a)(2) were identified using the methods described in Section 2.1.2.2. A review of each mechanical system was performed to identify nonsafety-related systems or nonsafety-related portions of safety-related systems with the potential for adverse spatial interaction with safety-related systems or components. Components subject to AMR due only to scoping criterion 10 CFR 54.4(a)(2) are evaluated in this section.

The following systems are within the scope of license renewal only based on the criterion of 10 CFR 54.4(a)(2):

- Radiation monitoring (mechanical)
- Secondary sampling
- Service cooling water
- Solid radwaste

System Descriptions/System Intended Functions

Radiation Monitoring System (Mechanical)

The radiation monitoring system (mechanical) includes piping and other mechanical components that convey sampled media to radiation monitors that are within the scope of license renewal. The portion of the radiation monitoring system (electrical) within the scope of license renewal consists of the control room air supply intake monitors (R25, R26), high range containment monitors (R30, R31), control room pressurization system monitors (R51 to R54), spent fuel area monitor (R58), new fuel storage area monitor (R59) and the containment purge exhaust train A and B monitors (R44A, R44B). Only monitors R44A/B are evaluated in the radiation monitoring system boundary, all other in-scope radiation monitors are in the miscellaneous HVAC system boundary.

Nonsafety-related portions of the radiation monitoring system (mechanical) are indirectly attached to safety-related piping, such that the structural failure of the nonsafety-related piping could prevent satisfactory accomplishment of safety-related system functions. These portions of the radiation monitoring system are in scope as nonsafety-related affecting safety-related components based on the criterion of 10 CFR 54.4(a)(2).

Secondary Sampling System

The secondary sampling system is a nonsafety-related system that provides sampling and analysis of secondary plant systems.

The central sample panel for each unit is located in the auxiliary building. Each unit has another sample panel located in the buttress area west of the turbine building. Most of the sample points and lines are in the turbine building but the lines leading to the central sample panels are in the auxiliary building.

Portions of the secondary sampling system are in scope as nonsafety affecting safety-related components based on the criterion of 10 CFR 54.4(a)(2) due to spatial interaction and structural integrity.

Service Cooling Water System

The service cooling water (SCW) system is a closed system used to cool equipment in the secondary portion of the plant. The SCW system is used in the secondary for steam and power conversion portion of the plant only.

SCW system components (pumps, heat exchangers, cooling loads, etc.) are located primarily in the turbine building, but the system also services cooling loads located in the auxiliary building.

Portions of the SCW system are spatially oriented such that their failure could prevent the satisfactory accomplishment of a safety-related function. These portions of the SCW system are within the scope of license renewal as nonsafety affecting safety-related components based on the criterion of 10 CFR 54.4(a)(2).

Solid Radwaste System

The solid radwaste system (SRS) collects, processes, packages and stores the wet and solid radioactive wastes generated by plant operations until shipment offsite for permanent disposal. Functionally, it is segregated into four subsystems - spent filter cartridges, wet solid radwaste, mixed waste, and dry active waste. The SRS is located in three buildings: the auxiliary building components including the solidification pad east of the auxiliary building; the solid radwaste storage facility, the north radwaste building; and the radwaste storage building, the south radwaste building.

The SRS is primarily a non-fluid system (except for the wet solid radwaste subsystem) consisting of components and subsystems used to collect, package and store wet and solid radwaste. The wet solid radwaste subsystem processes waste via the spent resin transfer subsystem which is common to both DCPP Units, except for the components and piping upstream of the spent resin storage tanks.

The SRS contains nonsafety-related components that are spatially oriented such that their failure could prevent the satisfactory accomplishment of a safety-related function. Also, portions of the nonsafety-related SRS attach to safety-related components such that the structural failure of the nonsafety-related piping could prevent satisfactory accomplishment of safety-related system functions. These portions of the SRS are in scope as nonsafety affecting safety-related components based on the criterion of 10 CFR 54.4(a)(2).

FSAR References

Details of the radiation monitoring system (mechanical) system are discussed in FSAR Sections 11.4.1, 11.4.2.2, and Table 11.4-1.

Details of the secondary sampling system are discussed in FSAR Section 9.3.2.3.

Details of the service cooling water system are discussed in FSAR Section 9.2.1.

Details of the solid radwaste system are discussed in FSAR Sections 11.2 and 11.5.

License Renewal Boundary Drawings

The license renewal boundary drawings for the radiation monitoring system (mechanical) are listed below:
LR-DCPP-23A-106723-03
LR-DCPP-23A-107723-03

The license renewal boundary drawings for the secondary sampling system are listed below:
LR-DCPP-28-106728-02
LR-DCPP-28-106728-03
LR-DCPP-28-107728-02
LR-DCPP-28-107728-03

The license renewal boundary drawings for the service cooling water system are listed below:
LR-DCPP-15-106715-02
LR-DCPP-15-106715-03
LR-DCPP-15-107715-02

The license renewal boundary drawings for the solid radwaste system are listed below:
LR-DCPP-04-106704-16
LR-DCPP-04-107704-16
LR-DCPP-16-106716-18
LR-DCPP-19-106719-07
LR-DCPP-19-106719-09
LR-DCPP-19-106719-10
LR-DCPP-19-106719-13
LR-DCPP-23B-106723-09
LR-DCPP-78-106719-15
LR-DCPP-78-106719-16

Component-Function Relationship Table

The component types subject to AMR are indicated in Table 2.3.3-18 - Miscellaneous Systems In Scope ONLY Based on Criterion 10 CFR 54.4(a)(2).

Table 2.3.3-18 Miscellaneous Systems In Scope ONLY Based on Criterion 10 CFR 54.4(a)(2)

Component Type	Intended Function
Bellows	Leakage Boundary (spatial)
Chiller	Leakage Boundary (spatial)
Closure Bolting	Leakage Boundary (spatial) Structural Integrity (attached)
Demineralizer	Leakage Boundary (spatial)
Filter	Leakage Boundary (spatial)
Flexible Hoses	Leakage Boundary (spatial)
Flow Element	Leakage Boundary (spatial)
Flow Indicator	Leakage Boundary (spatial)
Heat Exchanger (Isothermal Chiller)	Leakage Boundary (spatial)
Hose	Leakage Boundary (spatial)
Indicator	Leakage Boundary (spatial)
Instrument Bellows	Leakage Boundary (spatial)
Piping	Leakage Boundary (spatial) Structural Integrity (attached)
Pump	Leakage Boundary (spatial) Structural Integrity (attached)
Sample Sink	Leakage Boundary (spatial)
Sensor Element	Leakage Boundary (spatial)
Sight Gauge	Leakage Boundary (spatial)
Strainer	Leakage Boundary (spatial)
Tank	Leakage Boundary (spatial)
Test Connection	Leakage Boundary (spatial)
Tubing	Leakage Boundary (spatial) Structural Integrity (attached)
Valve	Leakage Boundary (spatial) Structural Integrity (attached)

The AMR results for these component types are provided in Table 3.3.2-18, Auxiliary Systems – Summary of Aging Management Evaluation – Miscellaneous Systems In Scope ONLY for Criterion 10 CFR 54.4(a)(2).

2.3.4 Steam and Power Conversion Systems

This section of the application addresses scoping and screening results for the following systems:

- Turbine steam supply (Section 2.3.4.1)
- Auxiliary steam (Section 2.3.4.2)
- Feedwater (Section 2.3.4.3)
- Condensate (Section 2.3.4.4)
- Auxiliary feedwater (Section 2.3.4.5)

2.3.4.1 Turbine Steam Supply System

System Description

The turbine steam supply system conveys the generated steam from the nuclear steam supply system to the turbine generator, turbine driven feedwater pumps, the turbine-driven auxiliary feed pump, condenser steam dumps, and the auxiliary steam system.

Each of the four main steam lines is equipped with one power-operated atmospheric relief valve, five spring-loaded safety valves, and one main steam isolation valve (MSIV) and check valve. The atmospheric steam dumps and the steam supply to the auxiliary steam system are connected to a cross-tie header downstream of the MSIVs.

The turbine steam supply system includes the turbine-generator, which converts thermal energy initially to mechanical energy and finally to electrical energy.

The condenser steam dump system is included in the turbine steam supply system and has the capability to bypass up to 40 percent of full load main steam flow directly to the main condenser during the emergency condition caused by a sudden load rejection or turbine trip. The condenser steam dump system is also used during plant startup or shutdown.

The steam generator blowdown system, which aids in maintaining steam generator chemistry within plant specifications, is included in the turbine steam supply system. The steam generator blowdown system is composed of two processing paths. One path discharges blowdown flow via the steam generator blowdown tank to the circulating water discharge tunnel. The other path recycles blowdown flow to the main condenser via the blowdown treatment system or the blowdown treatment bypass line.

System Intended Functions

The turbine steam supply system provides heat removal from the RCS for controlled cooldown during normal, accident and post-accident conditions. Portions of the turbine steam supply system provide containment isolation and overpressure protection for the secondary side of the steam generators and the main steam piping. The turbine steam supply system also provides steam as a motive force to support the operation of the turbine-driven auxiliary feedwater pumps. Therefore, portions of the turbine steam supply system are within the scope of license renewal based on the criteria of 10 CFR 54.4(a)(1).

Portions of the safety-related turbine steam supply system attach to nonsafety-related piping such that the structural failure of the nonsafety-related piping could prevent satisfactory accomplishment of safety-related system functions. Some of the turbine steam supply system in the auxiliary building contains nonsafety-related components that are spatially oriented such that their failure could prevent the satisfactory accomplishment of a safety-related function associated with a safety-related component. Therefore, portions of turbine steam supply system are within the scope of license renewal as nonsafety affecting safety-related components based on the criterion of 10 CFR 54.4(a)(2).

Portions of the turbine steam supply system support ATWS, fire protection, SBO and EQ requirements and are within the scope of license renewal based on the criteria 10 CFR 54.4(a)(3).

FSAR References

Additional details of the turbine steam supply system can be found in FSAR Sections 6.5.2.1.2, 10.2, 10.3, 10.4.4, and 10.4.8.

License Renewal Boundary Drawings

The license renewal boundary drawings for the turbine steam supply system are listed below:
LR-DCPP-04-106704-02
LR-DCPP-04-106704-03
LR-DCPP-04-106704-04
LR-DCPP-04-106704-08
LR-DCPP-04-106704-14
LR-DCPP-04-106704-15
LR-DCPP-04-106704-16
LR-DCPP-04-107704-02

LR-DCPP-04-107704-03
LR-DCPP-04-107704-04
LR-DCPP-04-107704-08
LR-DCPP-04-107704-09
LR-DCPP-04-107704-14
LR-DCPP-04-107704-15
LR-DCPP-04-107704-16

Component-Function Relationship Table

The component types subject to AMR are indicated in Table 2.3.4-1 – Turbine Steam Supply System.

Table 2.3.4-1 Turbine Steam Supply System

Component Type	Intended Function
Closure Bolting	Leakage Boundary (spatial) Pressure Boundary Structural Integrity (attached)
Demineralizer	Leakage Boundary (spatial)
Filter	Leakage Boundary (spatial)
Flow Element	Leakage Boundary (spatial) Pressure Boundary Structural Integrity (attached) Throttle
Heat Exchanger (Sample Cooler)	Leakage Boundary (spatial) Structural Integrity (attached)
Indicator	Leakage Boundary (spatial)
Orifice	Leakage Boundary (spatial) Pressure Boundary Structural Integrity (attached) Throttle
Piping	Leakage Boundary (spatial) Pressure Boundary Structural Integrity (attached)
Pump	Leakage Boundary (spatial)
Strainer	Filter Pressure Boundary
Tank	Leakage Boundary (spatial) Structural Integrity (attached)

Table 2.3.4-1 Turbine Steam Supply System (Continued)

Component Type	Intended Function
Test Connection	Pressure Boundary
Trap	Leakage Boundary (spatial) Pressure Boundary Structural Integrity (attached)
Tubing	Leakage Boundary (spatial) Pressure Boundary
Turbine	Pressure Boundary
Valve	Leakage Boundary (spatial) Pressure Boundary Structural Integrity (attached)

The AMR results for these component types are provided in Table 3.4.2-1, Steam and Power Conversion Systems – Summary of Aging Management Evaluation – Turbine Steam Supply System.

2.3.4.2 Auxiliary Steam System

System Description

The purpose of the auxiliary steam system is to supply steam to various pieces of equipment and plant locations. Steam is required for the following:

- Cask decontamination area
- Caustic storage tank
- Boric acid batching tank and water preheater
- Waste concentrator (abandoned)
- Boric acid evaporators and preheaters
- Gland steam supply for the main turbine and main feedwater pump drive turbines
- Makeup water evaporator air ejector (abandoned)
- Steam jet air ejector (main condenser)

- Containment atmosphere
- Steam for service cleaning and equipment maintenance inside containment
- Building heating reboiler:
  - Containment purge air
  - Fuel handling area
  - Auxiliary building
  - Machine shop
- Main condenser deaeration steam
- Caustic regeneration system
- Carbon dioxide vaporizer

During normal operation, either unit can supply steam from the main steam system via pressure reducing valves. During refueling, other outages, or startup of a unit, an auxiliary boiler is capable of supplying steam when main steam is not available. During shutdown, it is necessary to supply steam to the boric acid evaporator and batch tank, and the waste concentrator.

The auxiliary steam system consists of two auxiliary boilers, pumps, receivers, tanks, piping, and valves. One auxiliary boiler (0-2) is located in a separate building; the other auxiliary boiler (0-1) is located in a separate room in the Unit 1 ventilation building and is abandoned. The piping and valves associated with the auxiliary steam system are located in the auxiliary boiler enclosure, the turbine building, the auxiliary building, the fuel handling building, and the containment. The system contains piping which penetrates containment and contains the necessary containment isolation valves.

System Intended Functions

Most of the auxiliary steam system is nonsafety-related; however, a section of the system piping penetrates containment and is safety-related. Therefore, portions of the auxiliary steam system are within the scope of license renewal based on the criteria of 10 CFR 54.4(a)(1).

Portions of the nonsafety-related auxiliary steam system piping are attached to safety-related containment penetration piping such that the structural failure of the nonsafety-related piping could prevent satisfactory accomplishment of safety-related system functions. Portions of the auxiliary steam system in the auxiliary building and containment contain nonsafety-related components that are spatially oriented such that their failure could prevent the satisfactory accomplishment of a safety-related function associated with a safety-related component. These portions of the auxiliary steam system are within the scope of license renewal as nonsafety-related components affecting safety-related components based on the criterion of 10 CFR 54.4(a)(2).

Portions of the auxiliary steam system support EQ requirements and are within the scope of license renewal based on the criteria of 10 CFR 54.4(a)(3).

FSAR References

Additional details of the auxiliary steam system are included in FSAR Section 9.3.7.1.

License Renewal Boundary Drawings

The license renewal boundary drawings for the auxiliary steam system are listed below:
LR-DCPP-06-106706-02
LR-DCPP-06-106706-03
LR-DCPP-06-106706-05
LR-DCPP-06-106706-06
LR-DCPP-06-106706-07
LR-DCPP-06-106706-08

Component-Function Relationship Table

The component types subject to AMR are indicated in Table 2.3.4-2 – Auxiliary Steam System.

Table 2.3.4-2 Auxiliary Steam System

Component Type	Intended Function
Bellows	Leakage Boundary (spatial)
Closure Bolting	Leakage Boundary (spatial) Structural Integrity (attached)
Compressor	Leakage Boundary (spatial)

Table 2.3.4-2 Auxiliary Steam System (Continued)

Component Type	Intended Function
Filter	Leakage Boundary (spatial)
Heat Exchanger (Aux Steam Drain Rec Vent Cond)	Leakage Boundary (spatial) Structural Integrity (attached)
Heat Exchanger (Aux Boiler Sample Cooler)	Leakage Boundary (spatial)
Heat Exchanger (Boiler)	Leakage Boundary (spatial)
Heat Exchanger (Sample Cooler)	Leakage Boundary (spatial)
Hose	Leakage Boundary (spatial)
Orifice	Leakage Boundary (spatial)
Piping	Leakage Boundary (spatial) Pressure Boundary Structural Integrity (attached)
Pump	Leakage Boundary (spatial)
Sample Sink	Leakage Boundary (spatial)
Sight Gauge	Leakage Boundary (spatial)
Strainer	Leakage Boundary (spatial)
Switch	Leakage Boundary (spatial)
Tank	Leakage Boundary (spatial)
Test Connection	Leakage Boundary (spatial)
Trap	Leakage Boundary (spatial) Structural Integrity (attached)
Tubing	Leakage Boundary (spatial)
Valve	Leakage Boundary (spatial) Pressure Boundary Structural Integrity (attached)

The AMR results for these component types are provided in Table 3.4.2-2, Steam and Power Conversion Systems – Summary of Aging Management Evaluation – Auxiliary Steam System.

2.3.4.3 Feedwater System

System Description

The feedwater system receives condensate from the condensate pumps and heater drain tanks pump and delivers it to the steam generators at the required pressure and temperature.

Two half-capacity, high-speed turbine driven feedwater pumps are provided with common suction and discharge manifolds. All pumps are equipped with minimum flow protective devices.

The water discharged from the feedwater pumps flows through the single stage of high pressure heaters to the steam generators through four lines penetrating the containment, one line for each steam generator. Flow regulating valves, flow venturis, isolation valves, bypass regulating valves, and a check valve are installed in each line outside the containment.

The auxiliary feedwater system is part of the feedwater system but is evaluated separately in Section 2.3.4.5.

System Intended Functions

The safety-related portions of the feedwater system, from the steam generators to the isolation valves, provide flow paths for the auxiliary feedwater to the steam generators and isolate feedwater flow to the steam generators during a main steam or feedwater line break event or a containment overpressure event. The check valves, feedwater regulating valves, and feedwater regulating bypass valves also provide isolation functions. The portions inside the containment also serve as the containment barrier against fission product release to the environment. The flow venturis and associated flow transmitters in each loop are also safety-related because they are used in the calculation of reactor power. Therefore, the feedwater system is within the scope of license renewal based on the criteria of 10 CFR 54.4(a)(1).

Portions of the safety-related feedwater system attach to nonsafety-related piping such that the structural failure of the nonsafety-related piping could prevent satisfactory accomplishment of safety-related system functions. Portions of the feedwater system in the auxiliary building contain nonsafety-related components that are spatially oriented such that their failure could prevent the satisfactory accomplishment of a safety-related function associated with a safety-related component. These portions of feedwater system are within the scope of license

renewal as nonsafety affecting safety-related components based on the criterion of 10 CFR 54.4(a)(2).

Portions of the feedwater system support fire protection, SBO, and EQ requirements and are within the scope of license renewal based on the criteria of 10 CFR 54.4(a)(3).

FSAR References

Additional details of the feedwater system are included in FSAR Section 10.4.7.

License Renewal Boundary Drawings

The license renewal boundary drawings for the feedwater system are listed below:
LR-DCPP-03-106703-02
LR-DCPP-03-106703-03
LR-DCPP-03-107703-02
LR-DCPP-03-107703-03

Component-Function Relationship Table

The component types subject to AMR are indicated in Table 2.3.4-3 - Feedwater System.

Table 2.3.4-3 Feedwater System

Component Type	Intended Function
Closure Bolting	Leakage Boundary (spatial) Pressure Boundary Structural Integrity (attached)
Flow Element	Pressure Boundary Throttle
Heat Exchanger (Feedwater Heater)	Structural Integrity (attached)
Piping	Leakage Boundary (spatial) Pressure Boundary Structural Integrity (attached)
Pump	Structural Integrity (attached)

Table 2.3.4-3 Feedwater System (Continued)

Component Type	Intended Function
Tubing	Leakage Boundary (spatial) Pressure Boundary
Valve	Leakage Boundary (spatial) Pressure Boundary Structural Integrity (attached)

The AMR results for these component types are provided in Table 3.4.2-3, Steam and Power Conversion Systems – Summary of Aging Management Evaluation – Feedwater System.

2.3.4.4 Condensate System

System Description

The purposes of the condensate system are to collect the condensate from the exhaust steam of main turbines and feedwater pump turbines and the steam cycle drains in the main condenser hotwell and to deliver deaerated water from the main condenser hotwells to the suction of the main feedwater pumps. Together with the feedwater system, the feedwater is delivered to the steam generators at the required pressure and temperature. The hotwell may also provide water to the firewater system or the auxiliary feedwater system for long-term cooling.

Major components in the condensate system include the main condenser, condensate demineralizers three half capacity centrifugal condensate pumps and three condensate booster pumps.

The condensate system interfaces with the feedwater system, which is evaluated in Section 2.3.4.3. The condensate system interfaces with the secondary sampling system, which is evaluated in the secondary sampling system in Section 2.3.3.18. The condensate storage tank, which provides makeup and surge capacity to compensate for changes in condensate system inventory, is evaluated in the makeup water system in Section 2.3.3.5.

System Intended Functions

Portions of the condensate system are located in the auxiliary building and contain nonsafety-related components that are spatially oriented such that their failure could prevent the satisfactory accomplishment of a safety-related function associated with

a safety-related component. These portions of the condensate system are in scope as nonsafety affecting safety-related components based on the criterion of 10 CFR 54.4(a)(2).

Portions of the condensate system provide connections on the condenser hotwell that can be utilized to supply water to the firewater system to support fire protection requirements and are within the scope of license renewal based on the criteria of 10 CFR 54.4(a)(3).

FSAR References

Additional details of the condensate system are included in FSAR Sections 3.6.1.2, 6.5.2.1.1, 9.5.1.2.3, 10.4.1, 10.4.6, 10.4.7, and 10.4.9.

License Renewal Boundary Drawings

The license renewal boundary drawings for the condensate system are listed below:
LR-DCPP-02-106702-02
LR-DCPP-02-106702-03
LR-DCPP-02-106702-10
LR-DCPP-02-106702-11
LR-DCPP-02-107702-02
LR-DCPP-02-107702-03
LR-DCPP-02-107702-10
LR-DCPP-02-107702-11
LR-DCPP-16-106716-16

Component-Function Relationship Table

The component types subject to AMR are indicated in Table 2.3.4-4 - Condensate System.

Table 2.3.4-4 Condensate System

Component Type	Intended Function
Closure Bolting	Leakage Boundary (spatial) Pressure Boundary
Heat Exchanger (Main Condenser)	Pressure Boundary
Piping	Leakage Boundary (spatial) Pressure Boundary Structural Integrity (attached)
Pump	Leakage Boundary (spatial)
Sight Gauge	Leakage Boundary (spatial)
Valve	Leakage Boundary (spatial) Pressure Boundary

The AMR results for these component types are provided in Table 3.4.2-4, Steam and Power Conversion Systems – Summary of Aging Management Evaluation – Condensate System.

2.3.4.5 Auxiliary Feedwater System

System Description

The auxiliary feedwater system serves as a backup supply of feedwater to the secondary side of the steam generators when the main feedwater system is not available, thereby maintaining the heat sink capabilities of the steam generators during startup, cooldown, and emergency conditions. The auxiliary feedwater system takes feedwater from the condensate storage tank (CST) through the auxiliary feedwater pumps that discharge to the feedwater system piping and steam generators. Two motor-driven auxiliary feedwater pumps and one turbine-driven auxiliary feedwater pump are available to ensure the required feedwater flow to the steam generators is available. Piping, valves, and components associated with the safety-related motor-driven and steam driven auxiliary feedwater pumps from the CST to the feedwater piping interfaces are safety-related.

The CST is evaluated with the makeup water system in Section 2.3.3.5. The steam turbine drive for the turbine-driven auxiliary feedwater pump is evaluated in Section 2.3.4.1.

System Intended Functions

The auxiliary feedwater system is relied upon as the source of feedwater supply to the steam generators to maintain a secondary heat sink for design basis event mitigation. Most of the auxiliary feedwater system serves a safety-related function. Therefore, the auxiliary feedwater system is in the scope of license renewal based on the criteria of 10 CFR 54.4(a)(1).

Portions of the auxiliary feedwater system in the auxiliary building contain nonsafety-related components that are spatially oriented such that their failure could prevent the satisfactory accomplishment of a safety-related function associated with a safety-related component. Also, portions of the safety-related auxiliary feedwater system attach to nonsafety-related piping such that the structural failure of the nonsafety-related piping could prevent satisfactory accomplishment of safety-related system functions. These portions of auxiliary feedwater are in scope as nonsafety affecting safety-related components based on the criterion of 10 CFR 54.4(a)(2).

Portions of auxiliary feedwater system are required to support fire protection, SBO, EQ, and ATWS requirements and are within the scope of license renewal based on the criteria of 10 CFR 54.4(a)(3).

FSAR References

Additional details of the auxiliary feedwater system are included in
FSAR Section 6.5.

License Renewal Boundary Drawings

The license renewal boundary drawings for the auxiliary feedwater system are listed below:
LR-DCPP-03B-106703-03
LR-DCPP-03B-106703-04
LR-DCPP-03B-107703-03
LR-DCPP-03B-107703-04

Component-Function Relationship Table

The component types subject to AMR are indicated in
Table 2.3.4-5 - Auxiliary Feedwater System.

Table 2.3.4-5 Auxiliary Feedwater System

Component Type	Intended Function
Closure Bolting	Leakage Boundary (spatial) Pressure Boundary Structural Integrity (attached)
Flow Element	Pressure Boundary Throttle
Heat Exchanger (Aux Feedwater Turbine Oil Cooler)	Heat Transfer Pressure Boundary
Orifice	Leakage Boundary (spatial) Pressure Boundary Structural Integrity (attached) Throttle
Piping	Leakage Boundary (spatial) Pressure Boundary Structural Integrity (attached)
Pump	Leakage Boundary (spatial) Pressure Boundary Structural Integrity (attached)
Sight Gauge	Leakage Boundary (spatial)
Strainer	Leakage Boundary (spatial)
Tank	Leakage Boundary (spatial)
Tubing	Leakage Boundary (spatial) Pressure Boundary
Valve	Leakage Boundary (spatial) Pressure Boundary Structural Integrity (attached)

The AMR results for these component types are provided in Table 3.4.2-5, Steam and Power Conversion Systems – Summary of Aging Management Evaluation – Auxiliary Feedwater System.

2.4 SCOPING AND SCREENING RESULTS: STRUCTURES

The containments, structures, and component supports scoping and screening results consist of lists of component types that require AMR, arranged by structure. Brief descriptions and intended functions are provided for structures within the scope of license renewal. For each in scope structure, component types requiring an AMR are provided.

In addition to the structures within the scope of license renewal presented in this section, the component supports are evaluated as a commodity.

Two license renewal boundary drawings (LR-DCPP-STRUC-512297-01 and LR-DCPP-STRUC-512298-01) were created for structures based on the site plan.

This section provides the following information for each structure within the scope of license renewal:

- A description of the structure,
- Structure purpose and intended function(s)
- Reference to the applicable FSAR section(s), and
- A listing of the component types requiring AMR and associated component intended functions.

For component supports, this section provides the following information:

- A general description of commodity,
- Purpose and intended function of the commodity,
- Reference to the applicable FSAR section(s), and
- A listing of the component types requiring AMR and associated component intended functions.

The containments, structures, and component supports scoping and screening results are provided for the following structures and commodity group:

- Containment building (Section 2.4.1)
- Control room (located in auxiliary building) (Section 2.4.2)
- Auxiliary building (Section 2.4.3)
- Turbine building (Section 2.4.4)
- Radwaste storage facilities (Section 2.4.5)
- Pipeway structure (Section 2.4.6)
- Diesel fuel oil pump vaults and structures (Section 2.4.7)

- 230 kV Switchyard, 500 kV Switchyard, and electrical foundations and structures (Section 2.4.8)
- Fuel handling building (Section 2.4.9)
- Intake structure and intake control building (Section 2.4.10)
- Earthwork and yard structures (Section 2.4.11)
- Discharge structure (Section 2.4.12)
- Outdoor water storage tank foundations and encasements (Section 2.4.13)
- Supports (Section 2.4.14)

2.4.1 Containment Building

Structure Description

The reactor containment is a safety related, Design Class I structure. It is a steel-lined, reinforced concrete building of cylindrical shape with a hemispherical dome roof that completely encloses the reactor and RCS. The containment building foundation is a reinforced concrete mat that is circular in plan, founded on bedrock. Interaction between the containment building and other structures is minimized by specified seismic gaps. Expansion bellows, both inside the containment shell and inside the fuel handling building, permit thermal expansion of the fuel transfer tube and differential movement between structures. These bellows do not form part of the containment building pressure boundary. The bellows inside the fuel handling building are evaluated with that structure.

The reactor containment ensures that essentially no leakage of radioactive materials to the environment would result even if gross failure of the RCS were to occur simultaneously with the Hosgri earthquake or an earthquake of intensity twice the maximum postulated. The containment structures for Units 1 and 2 are essentially identical, as mirror images.

The following major structural components of the containment building are discussed below:

- steel liner plate
- penetrations
- containment building internal structures
- containment recirculation sump

Steel Liner Plate

The inside of the dome, cylinder, and base slab is lined with welded steel plate, which forms an essentially leak tight membrane. The nominal thickness of the steel liner is 3/8-in. on the wall and dome and the nominal thickness of the steel liner on the base slab is 1/4-in. All liner seams are full penetration butt-welded, and are covered with steel channels welded to the inside of the structure. These "leak chase" channels are arranged in zones so that one zone at a time may be pressurized to test the integrity of the liner plate welds. The liner in the dome and cylinder wall is anchored by welded studs that extend into the concrete wall past the innermost layers of reinforcing steel. For all penetrations in the exterior shell, a thickened plate is welded into the liner.

Penetrations

In general, a penetration consists of a sleeve embedded in the concrete wall and welded to the containment structure liner. The pipe, electrical conductor cartridge, duct, or access hatch passes through the embedded sleeve and one or both ends of the resulting annulus are closed off by welded end plates, bolted flanges, or flued heads. The penetrations are designed to maintain the same high degree of leaktight integrity afforded by the containment structure itself.

Equipment and Personnel Access Hatches

The equipment hatch is furnished with a double gasketed flange and bolted dished door. The hatch barrel is embedded in the containment structure wall and welded to the liner. Provision is made for pressurizing the space between the double gaskets of the door flanges and the weld seam leak chase channels at the sleeve-to-liner joint.

The two personnel hatches are double door welded steel assemblies. A quick-acting type equalizing valve connects each personnel hatch with the interior of the containment vessel for the purpose of equalizing pressure in the two systems when entering or leaving. The personnel hatch doors are interlocked to prevent simultaneous opening. All doors on the personnel hatches are double gasketed and provided with fittings to allow pressurization of the space between the double gaskets.

Piping Penetrations

Piping penetrations are provided for all piping passing through the containment boundary. Several small pipes may pass through a single embedded sleeve to

minimize the number of penetrations required. Welded end plates or flued heads are used to provide end closure. The welded joints are covered with a leak chase channel to allow periodic testing. The weld connecting the sleeve to the liner plate also has a leak chase channel.

Pipes carrying hot fluids through penetrations are designed to maintain the temperature of the concrete adjacent to the sleeve below 200°F under normal operating conditions. Pipes and penetrations are anchored, as required, to resist the forces and movements incident at the penetration under normal and accident conditions, and to limit the loads imposed on the containment structure liner. Piping loads are transferred to the penetration sleeve and thence to anchors in the concrete wall rather than to the containment structure liner.

Electrical Penetration Assemblies

Electrical penetrations are either canister types or feed-through modules that allow electrical conductors to pass through the containment boundary. Penetrations are qualified for a single seal pressure boundary. The canister and feed-through modules are connected to the header plate, which is welded to the containment penetration sleeve. All penetrations are provided with a connection to allow periodic leak testing. The weld connecting the sleeve to the liner plate is provided with a leak chase channel for leak testing.

Fuel Transfer Tube

A fuel transfer tube penetration is provided for fuel movement between the refueling canal in the containment structure and the spent fuel pool. The penetration consists of a 20-in. diameter stainless steel pipe installed inside a 24-in. diameter pipe sleeve. The inner pipe acts as the transfer tube and is fitted with a quick-opening hatch in the refueling canal and a standard gate valve in the spent fuel pool. This arrangement prevents leakage through the transfer tube in the event of an accident. The outer pipe is welded to the containment liner and provision is made, by use of a special seal ring to permit pressure testing all welds essential to the integrity of the penetration. Bellows expansion joints are provided on the pipes to compensate for any differential movement between the two pipes or other structures.

Containment Supply and Exhaust Purge Ducts

The ventilation system purge duct is equipped with two quick-acting tight-sealing valves (one inside and one outside the containment) to be used for isolation purposes. The space between the valves can be pressurized to check the integrity

of the penetration. In addition, the shaft seals of the purge valves are equipped with double seals with provision for testing the space between.

Spare Penetrations

Capped spare penetrations are provided. The welds between the sleeve and the liner and between the sleeve and the cap are covered with leak chase channels.

All spaces that are equipped for pressurization of penetrations and penetration sleeves are included in the same system of pressurization zones as the liner seam leak chase channels.

Several spare penetrations are also provided with capped, blind flanged or valved and capped end connections.

Mini-Equipment Hatches

The mini-equipment hatch penetrations are provided to facilitate the passage of electrical cables and compressed air/water hoses into containment during refueling outages to support maintenance activities. Each of the penetrations is comprised of flange connections on both sides of containment. The in-containment flanges are equipped with double O-rings, which form a double containment isolation boundary. The in-containment blind flanges are provided with pressure test connections to permit pressure testing between the O-rings. The O-rings prevent leakage through the penetrations in the event of an accident.

Containment Building Internal Structures

The internal structure consists of the following:

(1) The lower operating floor is a two-ft thick concrete slab placed over the containment structure base slab liner.

(2) The circular crane wall is a three-ft thick, 106-ft OD reinforced concrete wall, concentric with the exterior shell, and extending vertically from the containment structure base slab liner to the main operating floor. The runway for the 200-ton polar gantry crane is located on top of the circular crane wall. This wall is anchored to the containment structure base slab by Number 18 reinforcing bars. This anchorage is developed through the containment structure base slab liner by means of Cadweld sleeves welded to each side of the liner at the same locations.

(3) The reactor shield wall is a 34-ft OD, 17-ft ID reinforced concrete wall. This wall is anchored to the containment structure base slab in the same manner as the circular crane wall.

(4) The fuel transfer canal is a stainless steel lined cavity that can be filled with water during refueling. The vertical walls of the fuel transfer canal are four feet thick.

(5) The main operating floor at elevation 140-ft is a three-ft thick concrete slab supported by the circular crane wall and the fuel transfer canal walls. This slab is thickened locally near openings.

(6) Main steam line restraint towers are reinforced concrete buttresses extending from the main operating floor at elevations 140 to 184-ft.

(7) Annulus platforms are structural steel platforms at various elevations, located between the circular crane wall and the exterior shell.

(8) Nonsafety-related SSCs, such as stairs, platforms, and grates, are evaluated for potential interactions or failures that could prevent performance of a safety-related function.

Containment Recirculation Sump

The containment recirculation sump is located in the annulus area of the containment between the crane wall and the containment liner. In the sump, there is a screen system, which includes a trash rack with integral debris curb and two screen assemblies (front and rear assemblies). Each screen assembly has a plenum, and both plenums feed both RHR lines. The rear plenum assembly is water tight to allow collection of any potential back leakage from the RHR system. The strainer assemblies are designed to minimize blockage. The design provides enough screen area to ensure, with maximum accident debris loads and RHR flowrates, the RHR system has sufficient net positive suction head margin. The debris curb, trash rack, screen, sump liners, suction piping, and motor-operated valves are evaluated as mechanical components with the safety injection system in Section 2.3.2.1.

Structure Intended Functions

The purpose of the containment building is to limit the release of radioactive fission products following an accident to limit the dose to the public and the control room operators. The containment building also provides physical support for itself, the reactor coolant system, engineered safety features, and other systems and

equipment within the structure. The exterior walls and dome provide shelter and protection for the reactor vessel and other safety-related SSCs. Therefore, the containment building is within the scope of license renewal based on the criteria of 10 CFR 54.4(a)(1).

The containment building shelters and protects nonsafety-related SSCs whose failure could prevent performance of a safety-related function. Therefore, the containment building is within the scope of license renewal based on the criterion of 10 CFR 54.4(a)(2).

The containment building is required to support fire protection, SBO, and ATWS requirements and is within the scope of license renewal based on the criteria of 10 CFR 54.4(a)(3).

FSAR References

Additional details of the containment building are included in FSAR Section 3.8.1.

Component-Function Relationship Table

The component types subject to AMR are indicated in Table 2.4-1 - Containment Building.

Table 2.4-1 Containment Building

Component Type	Intended Function
Compressible Joints & Seals	Shelter, Protection Structural Pressure Boundary
Concrete Elements	Fire Barrier Flood Barrier HELB Shielding Missile Barrier Shelter, Protection Shielding Structural Pressure Boundary Structural Support
Doors	Flood Barrier Shelter, Protection
Expansion Joint	Structural Support

Table 2.4-1 Containment Building (Continued)

Component Type	Intended Function
Fire Barrier Coatings & Wraps	Fire Barrier
Fire Barrier Doors	Fire Barrier Shelter, Protection
Hatch - Emergency Airlock	Shielding Structural Pressure Boundary Structural Support
Hatch - Equipment	Shielding Structural Pressure Boundary Structural Support
Hatch - Personnel Airlock	Shielding Structural Pressure Boundary Structural Support
Liner Containment	Shelter, Protection Shielding Structural Pressure Boundary
Liner Refueling	Shelter, Protection
Penetration	Shielding Structural Pressure Boundary Structural Support
Penetrations Electrical	Shielding Structural Pressure Boundary Structural Support
Pipe Whip Restraints & Jet Shields	Missile Barrier Structural Support
Stairs, Platforms & Grates	Structural Support
Structural Steel	Structural Support

The AMR results for these component types are provided in Table 3.5.2-1, Containments, Structures, and Component Supports - Summary of Aging Management Evaluation - Containment Building.

2.4.2 Control Room (located in auxiliary building)

Structure Description

The control room is located on the 140-ft elevation of the auxiliary building, which is a multi-story, structural steel and reinforced concrete Design Class I structure

supported by a reinforced concrete basemat founded on bedrock. The control room walls and roof are designed to withstand design basis seismic events and maintain radiation exposures within 10 CFR 20 limits.

For the purposes of license renewal, the control room, the fuel handling areas, and the auxiliary building are evaluated separately; the control room in this section, the fuel handling building in Section 2.4.9, and the auxiliary building in Section 2.4.3. These three structures are defined as follows:

The control room, for both Units 1 and 2, is located on the 140-ft elevation of the auxiliary building between columns 15.7 and 20.3 and H and L. It includes the control room pressure boundary and all components inside this boundary.

The Unit 1 fuel handling building is located between columns 9.7 and 15.7 and T and V, and the Unit 2 fuel handling building is located between columns 20.3 and 26.3 and T and V. For both units, the fuel handling building encompasses all elevations, from the foundation to the roof. The fuel handling building is bounded on the north, south, and west sides by the auxiliary building.

The auxiliary building evaluation addresses all structural SSCs associated with the auxiliary building that are not included with the control room and fuel handling buildings as described above.

Structure Intended Functions

The control room is part of the safety-related, Design Class I structure that provides support, shelter, and protection to engineered safety features and nuclear auxiliary systems. Therefore, the control room is within the scope of license renewal based on the criteria of 10 CFR 54.4(a)(1).

The control room (located in the auxiliary building) shelters and protects nonsafety-related SSCs whose failure could prevent performance of a safety-related function. Therefore, it is within the scope of license renewal based on the criterion of 10 CFR 54.4(a)(2).

The control room is a safety-related structure that provides structural support, shelter, and protection for components required to demonstrate compliance with fire protection, ATWS, and SBO requirements and is within the scope of license renewal based on the criteria of 10 CFR 54.4(a)(3).

FSAR References

Additional details of the control room are included in FSAR Sections 1.2.2.4 and 3.8.2.1.

Component-Function Relationship Table

The component types subject to AMR are indicated in Table 2.4-2 - Control Room.

Table 2.4-2 Control Room

Component Type	Intended Function
Caulking & Sealant	Shelter, Protection Structural Pressure Boundary
Concrete Elements	Fire Barrier HELB Shielding Shelter, Protection Structural Pressure Boundary Structural Support
Doors	Shelter, Protection
Fire Barrier Doors	Fire Barrier HELB Shielding Shelter, Protection Structural Pressure Boundary
Fire Barrier Seals	Fire Barrier Structural Pressure Boundary
Penetrations Electrical	Structural Support
Penetrations Mechanical	Structural Support
Roofing Membrane	Shelter, Protection
Structural Steel	Shelter, Protection Structural Support

The AMR results for these component types are provided in Table 3.5.2-2, Containments, Structures, and Component Supports - Summary of Aging Management Evaluation - Control Room.

2.4.3 Auxiliary Building

Structure Description

The auxiliary building, which is Design Class I, is primarily a reinforced concrete shear wall structure, with a reinforced concrete roof. The fuel handling area crane

support structure is a structural steel moment resisting and braced frame supported on elevation 140-ft and extending up to elevation 188-ft and is enclosed with metal siding and a built up roof. The foundation of the auxiliary building is a reinforced concrete basemat divided between three elevations, all of which are founded on bedrock.

One half of the auxiliary building is a mirror image of the other, with each half of the structure containing equipment for one unit. The auxiliary building contains the control room, fuel handling building, and the containment penetration area. The auxiliary building also houses the remote hot shutdown control panel and equipment for the following systems: chemical and volume control, safety injection, residual heat removal, component cooling water, containment spray, 120 VAC, 120 VDC, 480 VAC, liquid radwaste, and gaseous radwaste. The only connections between the auxiliary building and other structures are the fuel transfer tube and miscellaneous piping. The fuel transfer tube is fitted with expansion bellows.

For the purposes of license renewal, the auxiliary building, the control room, and the fuel handling areas are evaluated separately; the auxiliary building in this section, the control room in Section 2.4.2 and fuel handling building in Section 2.4.9. These three structures are defined as follows:

The control room for both Unit 1 and 2 is located on the 140-ft elevation of the auxiliary building between columns 15.7 and 20.3 and H and L. It includes the control room pressure boundary and all components inside this boundary.

The fuel handling building for Unit 1 is located between columns 9.7 and 15.7 and T and V, and Unit 2 is located between columns 20.3 and 26.3 and T and V. For both units the fuel handling building encompasses all elevations, from the foundation to the roof. The fuel handling building is bounded on the north, south, and west sides by the auxiliary building.

The auxiliary building evaluation addresses all structural SSCs associated with the auxiliary building that are not included with the control room and fuel handling buildings as described above.

Structure Intended Functions

The auxiliary building is a safety-related, Design Class I structure that provides structural support, shelter, and protection to engineered safety features and nuclear auxiliary systems. Therefore, the auxiliary building is within the scope of license renewal based on the criteria of 10 CFR 54.4(a)(1).

The auxiliary building shelters and protects nonsafety-related SSCs whose failure could prevent performance of a safety-related function. Therefore, it is within the scope of license renewal based on the criterion of 10 CFR 54.4(a)(2).

The auxiliary building is a safety-related structure that provides structural support, shelter, and protection for components required to demonstrate compliance with fire protection, ATWS, and SBO requirements and is within the scope of license renewal based on the criteria of 10 CFR 54.4(a)(3).

FSAR References

Additional details of the auxiliary building are included in FSAR Sections 2.5.1.2.6.5 and 3.8.2.1.

Component-Function Relationship Table

The component types subject to AMR are indicated in Table 2.4-3 - Auxiliary Building.

Table 2.4-3 Auxiliary Building

Component Type	Intended Function
Caulking & Sealant	Flood Barrier Shelter, Protection Structural Pressure Boundary
Compressible Joints & Seals	Shelter, Protection Structural Pressure Boundary
Concrete Block (Masonry Walls)	Fire Barrier Shelter, Protection Structural Support
Concrete Elements	Fire Barrier Flood Barrier HELB Shielding Missile Barrier Shelter, Protection Shielding Structural Pressure Boundary Structural Support
Doors	Flood Barrier HELB Shielding Missile Barrier Shelter, Protection Structural Pressure Boundary

Table 2.4-3 Auxiliary Building (Continued)

Component Type	Intended Function
Fire Barrier Doors	Fire Barrier Flood Barrier HELB Shielding Shelter, Protection Structural Pressure Boundary
Fire Barrier Seals	Fire Barrier
Gypsum & Plaster Barrier	Shelter, Protection Structural Pressure Boundary
Hatch	Fire Barrier Shelter, Protection
Hatches & Plugs	Fire Barrier Missile Barrier Shelter, Protection
Metal Siding	Shelter, Protection Structural Pressure Boundary
Penetrations Electrical	Structural Support
Penetrations Mechanical	Structural Support
Roofing Membrane	Shelter, Protection
Stairs, Platforms & Grates	Structural Support
Structural Steel	Shelter, Protection Structural Support

The AMR results for these component types are provided in Table 3.5.2-3, Containments, Structures, and Component Supports - Summary of Aging Management Evaluation - Auxiliary Building.

2.4.4 Turbine Building

Structure Description

The turbine building is a reinforced concrete shear wall structure with a structural steel moment resisting and braced frame superstructure. The turbines are supported by reinforced concrete pedestals that are structurally isolated from the building floors. With the exception of the east and west buttress areas, all building loads are transmitted to bed rock through a reinforced concrete basemat and a series of rock anchors. The foundation mat either rests on base rock or on lean

concrete fill which is placed between the base rock and the bottom of the mat. The building loads in the buttress areas are transmitted down to base rock by a series of reinforced concrete grade beams and drilled concrete piles. The bottom floors in the buttress areas are slabs on grade underlain with compacted fill.

The turbine building was originally designed as a Design Class II structure using static equivalent seismic loads. During the Hosgri evaluation, the building was reevaluated and upgraded to withstand the Hosgri seismic loads. Buttresses and concrete walls were added, and internal modifications, such as reinforcing main columns, strengthening floor diaphragms, and roof and wall bracing, were made. To preclude turbine building-to-turbine pedestal seismic interaction, six piers of the turbine pedestal were post-tensioned to bedrock and the pedestal-to-building separations were increased along the east and west sides.

The turbine building contains Design Class I SSCs, including the component cooling water heat exchangers, emergency diesel generators, 4.16 kV vital switchgear, and control room pressurization system. The emergency diesel generators, located in the west side of the turbine building, are separated from each other by concrete walls and protected on all sides by tornado missile barriers. The building also houses major nonsafety-related SSCs, such as turbines, main generators, feedwater pumps, and condensate pumps.

Structure Intended Functions

The turbine building provides structural support, shelter, and protection for components relied upon to provide the capability to shutdown the reactor and maintain it in a safe shutdown condition. Therefore, the turbine building is within the scope of license renewal based on the criteria of 10 CFR 54.4(a)(1).

The turbine building provides structural support, shelter, and protection for nonsafety-related SSCs whose failure could prevent performance of a safety-related function. Therefore, the turbine building is within the scope of license renewal based on the criterion of 10 CFR 54.4(a)(2).

The turbine building provides structural support, shelter, and protection for components required to demonstrate compliance with fire protection, ATWS, and SBO requirements and are within the scope of license renewal based on the criteria of 10 CFR 54.4(a)(3).

FSAR References

Additional details of the turbine building are included in FSAR Section 3.8.5.

Component-Function Relationship Table

The component types subject to AMR are indicated in Table 2.4-4 - Turbine Building.

Table 2.4-4 Turbine Building

Component Type	Intended Function
Caulking & Sealant	Flood Barrier Shelter, Protection
Concrete Block (Masonry Walls)	Fire Barrier Shelter, Protection Structural Support
Concrete Elements	Fire Barrier Flood Barrier Missile Barrier Shelter, Protection Structural Support
Doors	Flood Barrier HELB Shielding Missile Barrier Shelter, Protection
Fire Barrier Coatings & Wraps	Fire Barrier
Fire Barrier Doors	Fire Barrier Flood Barrier HELB Shielding Shelter, Protection
Fire Barrier Seals	Fire Barrier
Gypsum & Plaster Barrier	Fire Barrier Shelter, Protection
Hatch	Shelter, Protection
Hatches & Plugs	Fire Barrier Shelter, Protection
Metal Siding	Shelter, Protection
Penetrations Electrical	Structural Support
Penetrations Mechanical	Structural Support
Stairs, Platforms & Grates	Structural Support
Structural Steel	Shelter, Protection Structural Support

The AMR results for these component types are provided in Table 3.5.2-4, Containments, Structures, and Component Supports - Summary of Aging Management Evaluation - Turbine Building.

2.4.5 Radwaste Storage Facilities

Structure Description

The radwaste storage facilities are rectangular reinforced concrete structures that include both the solid radwaste storage facility and the radwaste storage building. They house nonsafety-related equipment. The buildings are partially buried and are supported on compacted backfill and rock.

Structure Intended Functions

The radwaste storage facilities physically support and protect systems and components that are required to support fire protection requirements and are within the scope of license renewal based on the criteria of 10 CFR 54.4(a)(3).

FSAR References

Additional details of the radwaste storage facilities are included in FSAR Section 11.5.6 and Appendix 9.5B.

Component-Function Relationship Table

The component types subject to AMR are indicated in Table 2.4-5 - Radwaste Storage Facilities.

Table 2.4-5 Radwaste Storage Facilities

Component Type	Intended Function
Concrete Elements	Shelter, Protection Structural Support
Doors	Shelter, Protection
Hatches & Plugs	Shelter, Protection

The AMR results for these component types are provided in Table 3.5.2-5, Containments, Structures, and Component Supports - Summary of Aging Management Evaluation - Radwaste Storage Facilities.

2.4.6 Pipeway Structure

Structure Description

The pipeway structure is an open steel frame structure attached to the outside of the containment shell, the auxiliary building, and the turbine building. The pipeway structure supports portions of the main turbine steam supply, feedwater system, auxiliary feedwater system, and main steam safety and relief valves. Connections between the pipeway structure and the auxiliary and turbine buildings are provided with slotted holes oriented such that horizontal motions cannot be transmitted between the structures.

Structure Intended Functions

The pipeway structure provides structural support, shelter, and protection for components relied upon to provide the capability to shutdown the reactor and maintain it in a safe shutdown condition. Therefore, the pipeway structure is within the scope of license renewal based on the criteria of 10 CFR 54.4(a)(1).

The pipeway structure provides structural support, shelter, and protection for nonsafety-related SSCs whose failure could prevent performance of a safety-related function. Therefore, the pipeway structure is within the scope of license renewal based on the criterion of 10 CFR 54.4(a)(2).

The pipeway structure provides structural support, shelter, and protection for SSCs required to support fire protection requirements and is within the scope of license renewal based on the criteria of 10 CFR 54.4(a)(3).

FSAR References

Additional details of the pipeway structure are included in FSAR Sections 3.7.2.1.7.1 and 3.8.6.1.

Component-Function Relationship Table

The component types subject to AMR are indicated in Table 2.4-6 - Pipeway Structure.

Table 2.4-6 Pipeway Structure

Component Type	Intended Function
Stairs, Platforms & Grates	Structural Support
Structural Steel	Missile Barrier Structural Support

The AMR results for these component types are provided in Table 3.5.2-6, Containments, Structures, and Component Supports - Summary of Aging Management Evaluation - Pipeway Structure.

2.4.7 Diesel Fuel Oil Pump Vaults and Structures

Structure Description

The diesel fuel oil pump vaults and structures include the pump vaults, pipe trenches (also referred to as the DFO pipeway structure), and the diesel fuel oil tank foundations. Also included are the vaults at the suction and discharge lines, manway and level monitors, fill line, and vent line, and the traffic box at the vacuum gage. These reinforced concrete structures are below grade west of the turbine building. The vaults and trenches have reinforced concrete covers and steel hatches flush at ground level. Concrete curbing prevents water intrusion into the vaults. The tanks are supported on granular bedding over a reinforced concrete foundation. The vaults and trenches are supported either on compacted backfill or by reinforced concrete grade beams and drilled concrete piles, which extend down to bedrock. These structures support the underground fuel oil storage tanks, transfer pumps, piping, valves, and instrumentation for the emergency diesel generators. To provide for seismic separation between the underground tanks and diesel fuel pump vaults, there are conduits with flex piping connections between the two structures. The pump vaults are Design Class I. The Design Class II trench bottom slab and walls are qualified for the Hosgri earthquake to protect the Design Class I piping.

Structure Intended Functions

The diesel fuel oil pump vaults and structures provide structural support, shelter, and protection for safety-related SSCs relied upon to provide the capability to shutdown the reactor and maintain it in a safe shutdown condition. Therefore, the diesel fuel oil pump vaults and structures are within the scope of license renewal based on the criteria of 10 CFR 54.4(a)(1).

The diesel fuel oil pump vaults and structures provide structural support, shelter, and protection for nonsafety-related SSCs whose failure could prevent performance of a safety-related function. Therefore, the diesel fuel oil pump vaults and structures are within the scope of license renewal based on the criterion of 10 CFR 54.4(a)(2).

The diesel fuel oil pump vaults and structures provide support, shelter, and protection for components required to support fire protection and SBO requirements

and are within the scope of license renewal based on the criteria of 10 CFR 54.4(a)(3).

FSAR References

Additional details of the diesel fuel oil pump vaults and structures are included in FSAR Section 9.5.4.

Component-Function Relationship Table

The component types subject to AMR are indicated in Table 2.4-7 - Diesel Fuel Oil Pump Vaults and Structures.

Table 2.4-7 Diesel Fuel Oil Pump Vaults and Structures

Component Type	Intended Function
Caulking & Sealant	Shelter, Protection
Concrete Elements	Direct Flow Fire Barrier Shelter, Protection Structural Support
Hatch	Shelter, Protection
Hatches & Plugs	Shelter, Protection
Penetration Boot Seals	Shelter, Protection
Structural Steel	Structural Support

The AMR results for these component types are provided in Table 3.5.2-7, Containments, Structures, and Component Supports - Summary of Aging Management Evaluation - Diesel Fuel Oil Pump Vaults and Structures.

2.4.8 230 kV Switchyard, 500 kV Switchyard, and Electrical Foundations and Structures

Structure Description

The foundations for the main, auxiliary (TVA11 and TVA21), and startup transformers are reinforced concrete pads founded on compacted soil.

Outdoor switchgear in the 500 kV switchyard, all equipment from the main and auxiliary transformers up to, and including, the first circuit breakers in the 500 kV

switchyard, and all equipment from the startup transformers up to, and including, the 230 kV line intermediate circuit breakers are supported on reinforced concrete pads founded on compacted soil.

The control buildings for the 230 kV switchyard and the 500 kV switchyard are steel structures with metal siding, built-up roofs, and slab-on-grade floors.

All of the transmission towers up to the first circuit breakers in the 500 kV switchyard and towers supporting the transmission lines to the 230 kV line intermediate circuit breakers are steel towers. The transmission towers are founded on concrete bases of various configurations with some supported on compacted soil and others directly on bedrock.

Electrical cables from the transformers are installed in buried concrete duct banks. Manholes are provided along these duct banks for cable installation and access.

Structure Intended Functions

The concrete pads for the main, auxiliary, and startup transformers provide structural support of the main, auxiliary and startup transformers and support equipment. The concrete pads for the outdoor switchgear provide structural support for the outdoor switchgear. The steel towers and concrete footings of various configurations for the transmission towers provide structural support for the transmission lines. The concrete duct banks and manholes provide structural support, shelter and protection for the electrical cables. The control buildings provide structural support, shelter and protection for electrical controls, switches, and other equipment.

The concrete pads for the main, auxiliary, and startup transformers, the concrete pads for the outdoor switchgear, concrete bases of various configurations for the transmission towers, the control buildings, the concrete duct banks, and the manholes provide structural support for SSCs required for SBO recovery. The control buildings, the concrete duct banks and the manholes provide shelter and protection for SSCs required for SBO recovery. Therefore these structures are within the scope of license renewal based on the criteria of 10 CFR 54.4(a)(3).

FSAR References

Additional details of the 230 kV switchyard, 500 kV switchyard, and electrical foundations and structures are included in FSAR Section 2.5.1.2.6.4.

Component-Function Relationship Table

The component types subject to AMR are indicated in Table 2.4-8 – 230 kV Switchyard, 500 kV Switchyard, and Electrical Foundations and Structures.

Table 2.4-8 230 kV Switchyard, 500 kV Switchyard, and Electrical Foundations and Structures.

Component Type	Intended Function
Caulking & Sealant	Shelter, Protection
Concrete Elements	Shelter, Protection Structural Support
Doors	Shelter, Protection
Duct Banks and Manholes	Shelter, Protection Structural Support
Fire Barrier Doors	Fire Barrier Shelter, Protection
Gypsum & Plaster Barrier	Shelter, Protection
Hatch	Shelter, Protection
Metal Siding	Shelter, Protection
Roofing Membrane	Shelter, Protection
Structural Steel	Structural Support
Transmission Tower	Structural Support

The AMR results for these component types are provided in Table 3.5.2-8, Containments, Structures, and Component Supports - Summary of Aging Management Evaluation - 230 kV Switchyard, 500 kV Switchyard, and Electrical Foundations and Structures.

2.4.9 Fuel Handling Building

Structure Description

The fuel handling building is located in the auxiliary building, which is a multistory, structural steel and reinforced concrete Design Class I structure supported by a reinforced concrete basemat founded on bedrock. The fuel handling area crane support structure is a structural steel moment resisting and braced frame supported

on elevation 140-ft and extending up to elevation 188-ft and is enclosed by metal siding and a built up roof.

For the purposes of license renewal, the control room, the fuel handling areas, and the auxiliary building are evaluated separately; the control room in Section 2.4.2, the fuel handling building in this report, and the auxiliary building in Section 2.4.3. These three structures are defined as follows:

The control room for both Units 1 and 2 is located on the 140-ft elevation of the auxiliary building between columns 15.7 and 20.3 and H and L. It includes the control room pressure boundary and all components inside this boundary.

The Unit 1 fuel handling building is located between columns 9.7 and 15.7 and T and V, and Unit 2 fuel handling building is located between column 20.3 and 26.3 and T and V. For both units, the fuel handling building encompasses all elevations, from the foundation to the roof. The fuel handling building is bounded on the north, south, and west sides by the auxiliary building.

The auxiliary building evaluation addresses all structural SSCs associated with the auxiliary building that are not included with the control room and fuel handling buildings as described above.

Structure Intended Functions

The fuel handling building is a safety-related, Design Class I structure that provides structural support, shelter, and protection of components required to mitigate the consequences of accidents that could result in potential offsite exposure. Therefore, the fuel building is within the scope of license renewal based on the criteria of 10 CFR 54.4(a)(1).

The fuel handling building shelters and protects nonsafety-related SSCs whose failure could prevent performance of a safety-related function. Therefore, the fuel building is within the scope of license renewal based on the criterion of 10 CFR 54.4(a)(2).

Portions of the fuel building are required to support fire protection requirements and are within the scope of license renewal based on the criteria of 10 CFR 54.4(a)(3).

FSAR References

Additional details of the fuel handling building are included in FSAR Sections 3.8.2.1 and 9.1.

Component-Function Relationship Table

The component types subject to AMR are indicated in Table 2.4-9 - Fuel Handling Building.

Table 2.4-9 Fuel Handling Building

Component Type	Intended Function
Caulking & Sealant	Flood Barrier Shelter, Protection Structural Pressure Boundary
Compressible Joints & Seals	Shelter, Protection Structural Pressure Boundary
Concrete Elements	Fire Barrier Flood Barrier HELB Shielding Missile Barrier Shelter, Protection Structural Pressure Boundary Structural Support
Doors	Flood Barrier Missile Barrier Shelter, Protection Structural Pressure Boundary
Expansion Joint	Structural Support
Fire Barrier Doors	Fire Barrier Flood Barrier HELB Shielding Shelter, Protection Structural Pressure Boundary
Fire Barrier Seals	Fire Barrier
Gypsum & Plaster Barrier	Shelter, Protection Structural Pressure Boundary
Hatch	Shelter, Protection
Hatches & Plugs	Shelter, Protection
Liner Spent Fuel Pool	Structural Pressure Boundary
Metal Siding	Shelter, Protection Structural Pressure Boundary
Penetrations Electrical	Structural Support
Penetrations Mechanical	Structural Support

Table 2.4-9 Fuel Handling Building (Continued)

Component Type	Intended Function
Roofing Membrane	Shelter, Protection
Stairs, Platforms & Grates	Structural Support
Structural Steel	Shelter, Protection Structural Support

The AMR results for these component types are provided in Table 3.5.2-9, Containments, Structures, and Component Supports - Summary of Aging Management Evaluation - Fuel Handling Building.

2.4.10 Intake Structure and Intake Control Building

Structure Description

The intake structure and intake control building are reinforced concrete structures. The top level of the intake structure is a reinforced concrete slab. The roof of the intake control building is a roofing membrane over concrete on steel decking. The intake structure is backfilled by rock on three sides and has water on the fourth (western) side. These structures are supported by concrete mat foundations, which are founded on rock.

The intake structure houses and supports components of the circulating water system, auxiliary saltwater (ASW) system, bio-lab/sea water reverse osmosis pumps, including the screening system components. It also houses other related electrical, instrumentation and control and HVAC systems. It provides and directs the flow of ocean water. The bar racks and traveling screens minimize entry of debris and marine life into these systems so the systems can continue to perform their intended functions. ASW pump vents are extended with steel snorkels that face eastward to prevent seawater ingestion due to splash-up during the design flood event.

Structure Intended Functions

The intake structure provides structural support, shelter, and protection for SSCs required to achieve safe shutdown of the reactor and to maintain a safe shutdown. The seismic Design Class II structure was evaluated for the Hosgri earthquake to ensure that it can safely support and shelter the Design Class I ASW pumps and

equipment. Therefore, this structure is within the scope of license renewal based on the criteria of 10 CFR 54.4(a)(1).

The intake structure shelters and protects nonsafety-related SSCs whose failure could prevent performance of a safety-related function. Therefore, the intake structure is within the scope of license renewal based on the criterion of 10 CFR 54.4(a)(2).

The intake structure and intake control building are required to provide structural support, shelter, and protection for SSCs required to demonstrate compliance with fire protection and SBO requirements and are within the scope of license renewal based on the criteria of 10 CFR 54.4(a)(3).

FSAR References

Additional details of the intake structure and intake control building are included in FSAR Sections 3.8.5.2 and 9.2.5.3.

Component-Function Relationship Table

The component types subject to AMR are indicated in Table 2.4-10 - Intake Structure and Intake Control Building.

Table 2.4-10 Intake Structure and Intake Control Building

Component Type	Intended Function
Caulking & Sealant	Flood Barrier Shelter, Protection
Concrete Block (Masonry Walls)	Shelter, Protection Structural Support
Concrete Elements	Fire Barrier Flood Barrier Missile Barrier Shelter, Protection Structural Support
Doors	Flood Barrier Shelter, Protection
Fire Barrier Doors	Fire Barrier Shelter, Protection
Hatches & Plugs	Fire Barrier Missile Barrier Shelter, Protection
Metal Siding	Shelter, Protection

Table 2.4-10 Intake Structure and Intake Control Building (Continued)

Component Type	Intended Function
Penetrations Electrical	Structural Support
Penetrations Mechanical	Structural Support
Roofing Membrane	Shelter, Protection
Stairs, Platforms & Grates	Structural Support
Structural Metals	Structural Support
Structural Steel	Filter Missile Barrier Shelter, Protection Structural Support
Traveling Screen	Direct Flow Filter Structural Support

The AMR results for these component types are provided in Table 3.5.2-10, Containments, Structures, and Component Supports - Summary of Aging Management Evaluation - Intake Structure and Intake Control Building.

2.4.11 Earthwork and Yard Structures

Structure Description

The earthwork and yard structures include the circulating water conduits, auxiliary saltwater (ASW) vacuum breaker vaults, ASW thrust blocks and anchors, raw water storage reservoirs 1A and 1B, east and west breakwaters, and the earth slopes east of the auxiliary building and over the ASW line east of the intake structure.

The seismically qualified portions of the circulating water conduits and ASW vacuum breaker vaults are reinforced concrete structures founded on compacted fill. The Design Class I ASW supply piping is supported by reinforced concrete thrust blocks, compacted backfill, and concrete anchors attached to the circulating water conduits.

The raw water reservoir, located east of the power block, has reinforced concrete-walls. The reservoir is primarily intended to serve as fresh water storage for fire protection and long term cooling.

The breakwater structures, which are constructed of precast reinforced concrete blocks and rip-rap, protect the intake structure from tsunami loads. The earth slopes east of auxiliary building and over the ASW line east of the intake structure were analyzed for design basis seismic loads to ensure that such loading will not produce any significant slope failure that can impact Design Class I SSCs. The ASW system buried piping and electrical conduits are protected from tsunami/storm conditions by wave protection measures, which include concrete covers, revetments, roadway slabs, and pavement. Gabion mattresses embedded within the slopes are covered with grass for additional erosion control.

For the purposes of license renewal and aging management, the breakwaters and earth slope protection structures are evaluated as barriers.

Structure Intended Functions

The earthwork and yard structures provide structural support, shelter, and protection for components relied upon to provide the capability to shutdown the reactor and maintain it in a safe shutdown condition. Therefore, the earthwork and yard structures are within the scope of license renewal based on the criteria of 10 CFR 54.4(a)(1).

The earthwork and yard structures provide structural support, shelter, and protection for nonsafety-related SSCs whose failure could prevent performance of a safety-related function. Therefore, the structures are within the scope of license renewal based on the criterion of 10 CFR 54.4(a)(2).

The earthwork and yard structures provide structural support, shelter, and protection for components required to support fire protection and SBO requirements. Therefore, the earthwork and yard structures are within the scope of license renewal based on the criteria of 10 CFR 54.4(a)(3).

FSAR References

Additional details of the earthwork and yard structures are included in FSAR Sections 2.2.3, 2.4.6.6, 2.5.5, 9.2.3.2.1, 9.2.7, and 9.5.1.

Component-Function Relationship Table

The component types subject to AMR are indicated in Table 2.4-11 - Earthwork and Yard Structures.

Table 2.4-11 Earthwork and Yard Structures

Component Type	Intended Function
Barrier	Shelter, Protection
Caulking & Sealant	Shelter, Protection Structural Pressure Boundary
Concrete Elements	Shelter, Protection Structural Support
Hatches & Plugs	Shelter, Protection
Structural Steel	Structural Support
Tank	Structural Pressure Boundary Structural Support

The AMR results for these component types are provided in Table 3.5.2-11, Containments, Structures, and Component Supports - Summary of Aging Management Evaluation - Earthwork and Yard Structures.

2.4.12 Discharge Structure

Structure Description

The discharge structure, a massive energy dissipating device located in the coastal bluff west of the power block, provides a release path for the auxiliary saltwater discharge lines, steam generator blowdown tanks, and the turbine building sump. The structure is divided into two chambers (one for each unit) that are open to the ocean under all conditions. The two ASW return lines for each unit discharge into the chamber of that unit. It is a concrete structure with the base slab of the discharge structure keyed into and poured on sound rock. Where possible, the walls were formed directly against sound rock.

Structure Intended Functions

The discharge structure provides structural support, shelter, and protection for nonsafety-related SSCs whose failure could prevent performance of a safety-related function. Therefore, the discharge structure is within the scope of license renewal based on the criterion of 10 CFR 54.4(a)(2).

FSAR References

Additional details of the discharge structure are included in FSAR Sections 9.2.7.2.5 and 9.2.7.3.

Component-Function Relationship Table

The component type subject to AMR is indicated in Table 2.4-12 - Discharge Structure.

Table 2.4-12 Discharge Structure

Component Type	Intended Function
Concrete Elements	Shelter, Protection Structural Support

The AMR results for these component types are provided in Table 3.5.2-12, Containments, Structures, and Component Supports - Summary of Aging Management Evaluation - Discharge Structure.

2.4.13 Outdoor Water Storage Tank Foundations and Encasements

Structure Description

The outdoor water storage tank foundations and encasements support and protect the refueling water storage tank (RWST), the condensate storage tank (CST), and the fire water storage and transfer tank (FWSTT). There are two RWSTs and two CSTs, one to service each unit of the plant. The FWSTT, which serves both units, is made up of two concentric cylindrical steel tanks connected by a common dome roof. The inner tank is the firewater tank and the outer tank is the transfer tank. The RWST, the CST, and the firewater tank portion of the FWSTT are Design Class I. The tanks are encased in concrete for structural support and missile protection. They are supported on concrete fill down to bed rock and anchored with rock anchors. The pipe exiting each tank is enclosed by a concrete vault. The RWST, CST, and FWSTT steel liners are evaluated with their respective mechanical systems.

Structure Intended Functions

The function of the RWST, CST, and FWSTT foundations, concrete encasements, and vaults is to provide structural support and missile protection for the tank liners. The RWST, the CST, and the firewater tank portion of the FWSTT are safety-related and required for safe shutdown. Therefore, the outdoor water storage tank

foundations and encasements are within the scope of license renewal based on the criteria of 10 CFR 54.4(a)(1).

The FWSTT foundation provides structural support for nonsafety-related SSCs whose failure could prevent performance of a safety-related function. Therefore, the FWSTT foundation is within the scope of license renewal based on the criterion of 10 CFR 54.4(a)(2).

The RWST and CST encasements provide fire barriers to protect the safety-related tanks. The FWSTT foundation and encasement provide structural support for the fire water tank, which is required for fire protection. The CST foundation provides support for SSCs required for SBO. Therefore, these structures are within the scope of license renewal based on the criteria of 10 CFR 54.4(a)(3).

FSAR References

Additional details of the outdoor water storage tank foundations and encasements are included in FSAR Sections 3.3.2.3.2.9 and 3.8.3.1.

Component-Function Relationship Table

The component types subject to AMR are indicated in Table 2.4-13 - Outdoor Water Storage Tank Foundations and Encasements.

Table 2.4-13 Outdoor Water Storage Tank Foundations and Encasements

Component Type	Intended Function
Concrete Elements	Fire Barrier Missile Barrier Structural Support
Structural Steel	Structural Support

The AMR results for these component types are provided in Table 3.5.2-13, Containments, Structures, and Component Supports - Summary of Aging Management Evaluation - Outdoor Water Storage Tank Foundations and Encasements.

2.4.14 Supports

Structure Description

Mechanical and Electrical Supports

Structural supports for mechanical and electrical components are an integral part of all systems. Many of these supports are not uniquely identified with component identification numbers. However, characteristics of the supports, such as design, materials of construction, environments, and anticipated stressors, are similar. Therefore, structural supports for mechanical and electrical components are evaluated as commodities across system boundaries.

The commodity evaluation applies to structural supports within structures identified as within the scope of license renewal. The following structural supports for mechanical components are addressed:

- Supports for ASME Class 1 piping and components
- Supports for ASME Class 2 and 3 piping and components
- Supports for HVAC ducts, tube track, instrument tubing, instruments, and non-ASME piping and components

The following electrical components and supports are addressed:

- Cable Trays and Supports
- Conduit and Supports
- Electrical Panels and Enclosures
- Instrument Panels and Racks

Structural support evaluation boundaries are based upon the following:

- Integral attachments (such as plate welded to pipe at anchor points, saddles welded to heat exchangers, etc.) are evaluated with the specific component (pipe, pump, heat exchanger, etc.).
- All pins, bolting, and other removable hardware that are part of the connection to component integral attachments are evaluated with the structural support, except high strength bolts for Class 1 NSSS supports, which are evaluated

separately. A separate component for these high strength bolts has been included in the scope of this package.

- The exposed portions of embedded components (i.e., end portion of the threaded anchor and nut) are evaluated with the component supports, except high strength bolts for Class 1 NSSS supports, as noted above.

- Concrete and supporting structural hardware (including the embedded portion of threaded anchors) are evaluated with the structure. The concrete around anchorages must be evaluated with the supports to identify any concrete degradation that would impair the function of the anchors. This package includes a separate component for the anchorage concrete for in scope mechanical and electrical components in each building.

The following reactor coolant system component supports are included with the ASME Class 1 piping and component commodity group:

Reactor Vessel Supports

The reactor is supported on a massive concrete structure that also serves as a biological shield. Forces are transmitted from the reactor to the concrete support structure by an octagonal closed steel box that provides support at four of the eight reactor nozzles. The bearing plates below the reactor nozzle support shoes contain cooling water passages to control the temperature of the supporting concrete. The reactor support resists seismic loads and coolant loop (hot and cold leg) piping reactions. The reactor support system allows the reactor to expand radially over the supports but resists translational and torsional movement by the combined tangential restraining action of each nozzle support.

Steam Generator Supports

The steam generators are supported by two independent upper and lower structural systems as described below:

Vertical Supports - Four vertical pipe columns for each steam generator provide full vertical restraint while allowing free movement radially with respect to the reactor. These are bolted at the top to the steam generator and at the bottom to the concrete structure. Spherical ball bushings at the top and bottom of each of column allow unrestrained lateral movement of the steam generator during heatup and cooldown.

Horizontal Supports - Horizontal supports restrain the steam generators at two levels: (a) At elevation 140-ft, where the reinforced concrete slab acts as a rigid

diaphragm supporting horizontal forces (predominantly seismic) generated at this level. (b) At elevation 111-ft (the channel head), where support pads are provided on the vessel.

The horizontal supports permit slow radial movement due to thermal expansion while maintaining a positive restraint against sudden loads. This is accomplished through the use of four hydraulic snubbers at elevation 140-ft attached to a ring shimmed to the steam generator at 20 locations around the circumference.

The support pads at elevation 111-ft are keyed and shimmed to a sliding frame that is sandwiched between two rigid stationary frames anchored to massive concrete walls. The sliding frame is provided with a bumper system to transfer load to the stationary frames. The frame system for each of two sets of steam generators is interconnected so that pipe rupture loads in one loop are distributed between two frame systems.

Reactor Coolant Pump (RCP) Supports

The RCPs are supported on structural steel frames restrained horizontally at elevation 106-ft 5-1/2-in. by a system of steel struts anchored to rigid concrete walls. Thermal expansion is permitted by low friction support pads and oversized mounting holes. The support pads are keyed and shimmed to the frame. This support system resists vertical and lateral loads due to all plant operating conditions.

Pressurizer supports

The pressurizer is bolted to a structural steel frame, providing vertical and lateral support at its base at elevation 113-ft 2-in. Additional lateral support is provided by rigid guides embedded in the concrete slab near the center of gravity of the vessel at elevation 139-ft in conjunction with lugs projecting from the vessel shell. The upper support allows the pressurizer to expand radially and vertically, but resists torsional and translational horizontal movements.

Table 2.4-15, Component Types Assigned to Building/Structures is provided to identify support component types by structure.

Structure Intended Functions

Structural supports are within the scope of license renewal based on the criteria of 10 CFR 54.4(a)(1) because they support and protect components that are required to support and perform safety functions.

Nonsafety-related supports prevent interaction between safety-related and nonsafety-related components and are within the scope of license renewal based on the criterion of 10 CFR 54.4(a)(2).

Other supports provide support for components credited for fire protection, SBO and PTS and are within the scope of license renewal based on the requirements of 10 CFR 54.4(a)(3).

FSAR References

Additional details of supports are included in FSAR Sections 5.5.13 and 17.2.1.

Component-Function Relationship Table

The component types subject to AMR are indicated in Table 2.4-14 - Supports.

Table 2.4-14 Supports

Component Type	Intended Function
Cable Trays & Supports	Structural Support
Conduit And Supports	Shelter, Protection Structural Support
Electrical Panels & Enclosures	Shelter, Protection Structural Support
High Strength Bolting	Structural Support
Instrument Panels & Racks	Shelter, Protection Structural Support
Supports	Expansion/Separation Structural Support
Supports ASME 1	Structural Support
Supports ASME 2 & 3	Structural Support
Supports HVAC Duct	Structural Support
Supports Instrument	Structural Support
Supports Insulation	Structural Support
Supports Mech Equip Class 1	Structural Support
Supports Mech Equip Class 2 & 3	Structural Support

Table 2.4-14 Supports (Continued)

Component Type	Intended Function
Supports Mech Equip Non ASME	Structural Support
Supports Non ASME	Structural Support

The AMR results for these component types are provided in Table 3.5.2-14, Containments, Structures, and Component Supports - Summary of Aging Management Evaluation - Supports.

Table 2.4-15 Component Types Assigned to Supports by Building/Structure

Support Components Associated with Structures	Elect/I&C Components					Mechanical Components								
	Cable Trays and Supports	Conduit and Supports	Electrical Panels and Enclosures	Instrument Panels and Racks	Instrument Supports	ASME Class 1 Pipe Supports	ASME Class 2 and 3 Pipe Supports	Non-ASME Pipe Supports	Mechanical Equipment Class 1 Supports	Mechanical Equipment Class 2 and 3 Supports	Mechanical Equip Non-Code Supports	HVAC Duct Supports	High Strength Bolting	Insulation Supports
Containment Building	x	x	x	x	x	x	x	x	x	x	x	x	x	x
Control Room	x	x	x	x	x			x			x	x		
Auxiliary Building	x	x	x	x	x		x	x		x	x	x		
Turbine Building	x	x	x	x	x		x	x		x	x	x		
Radwaste Storage Facilities								x						
Pipeway Structure	x	x	x	x	x		x	x		x	x			
Diesel Fuel Oil Pump Vaults and Structures	x	x	x	x	x			x			x			
230 kV, 500 kV Switchyard and Electrical Foundations and Structures	x	x	x	x	x			x			x			
Fuel Handling Building	x	x	x	x	x		x	x		x	x	x		
Intake Structure and Intake Control Building	x	x						x			x			
Discharge Structure														
Earthwork and Yard Structures														
Outdoor Water Storage Tank Foundations and Encasements							x	x						

2.5 SCOPING AND SCREENING RESULTS: ELECTRICAL AND INSTRUMENTATION AND CONTROL SYSTEMS

The scoping and screening results for electrical and instrument and control system components consist of a list (Table 2.5-1, Electrical and I&C Component Groups Requiring Aging Management Review) of component types that require AMR.

Using the plant "spaces" approach, all electrical and instrument and control components were reviewed as a group regardless of the system assigned to each component. Bounding environmental conditions were used to evaluate the identified aging effect(s) with respect to component function(s) to determine the passive component groups that require AMR. This methodology is discussed in Section 2.1.3.3 and is consistent with the guidance in NEI 95-10.

The interface of electrical and instrument and control components with other types of components and the assessments of these interfacing components are provided in the appropriate mechanical or structural sections. The evaluation of electrical racks, panels, frames, cabinets, cable trays, conduit, manhole, duct banks, transmission towers and their supports is provided in the structural assessment documented in Section 2.4.

The following electrical component groups were evaluated to determine the groups that require AMR:

- Cable Connections (metallic parts)
- Connectors (exposed to borated water)
- Fuse Holders (not part of a larger assembly)
- High Voltage Insulators
- Insulated Cable and Connections (includes the following):
    - Electrical cables and connections not subject to 10 CFR 50.49 EQ requirements
    - Electrical cables and connections used in instrumentation circuits not subject to 10 CFR 50.49 EQ requirements that are sensitive to reduction in conductor insulation resistance
    - Inaccessible Medium-Voltage Electrical Cables not subject to 10 CFR 50.49 EQ requirements

- Metal Enclosed Bus (includes the following):
    - Bus bar and connections
    - Bus enclosure
    - Bus Insulation and insulators
- Switchyard Bus and Connections
- Terminal Blocks (not part of a larger assembly)
- Transmission Conductors and Connections
- Lightning Rods
- Electrical equipment subject to 10 CFR 50.49 environmental qualification (EQ) requirements
- Penetrations, Electrical
- Grounding conductors
- Cable Tie Wraps

A license renewal boundary drawing (LR-DCPP-ELEC-502110) was created from the plant one-line diagram. The plant one-line diagram schematically shows the portions of the plant AC electrical distribution system, including the SBO recovery path, that are included within the scope of license renewal.

2.5.1 Electrical Component Groups

2.5.1.1 Cable Connections (metallic parts)

The cable connections component type includes the metallic portions of cable connections that are located within passive and active equipment.

The function of the cable connections (metallic parts) is to maintain electrical continuity between specified sections of an electrical circuit to deliver voltage, current or signals.

2.5.1.2 Connectors (exposed to borated water)

The connector component type includes the connector contacts for electrical connectors exposed to borated water leakage. The function of the connectors is to electrically connect specified sections of an electrical circuit to deliver voltage, current or signals.

2.5.1.3 Fuse Holders (not part of a larger assembly)

The fuse holder type includes the metallic clamp of the in-scope fuse holders that are not part of larger assemblies (active equipment). The fuse holder insulating material is addressed with insulated cables and connections.

The function of the fuse holder metallic clamp is to maintain electrical continuity between specified sections of an electrical circuit to deliver voltage, current or signals.

The function of the fuse holder insulation is to electrically insulate sections of an electrical circuit from adjacent circuits and enclosures.

2.5.1.4 High Voltage Insulators

The high voltage insulators within the scope of license renewal are those associated with the power feeds from the switchyard to the plant that are used to connect the plant to the offsite power. These power feeds are required for the restoration of offsite power to meet the SBO requirements.

The function of the high voltage insulators is to support and insulate the high voltage transmission conductors and switchyard bus.

2.5.1.5 Insulated Cable and Connections

All electrical insulated cables and connections not subject to environmental qualification requirements of 10 CFR 50.49 were evaluated for aging management based on the comparison of material property capability with environmental conditions. All electrical cables routed within raceway containing cables that feed electrical components that perform license renewal functions are in the scope of license renewal. Electrical cables not routed with in-scope cables were excluded from aging management if they were identified as feeding an electrical component that performed no license renewal intended function.

The function of insulated cables and connections is to electrical continuity between specified sections of an electrical circuit to deliver voltage, current or signals. The types of insulated cables includes medium voltage power cables, low voltage power cables, control cables, instrumentation cables and insulated ground cables.

The function of the insulating material is to provide electrical insulation between the cable, connectors, fuse holders, and terminations and the enclosures or raceway.

The types of insulated connections included in this review are splices, connectors, insulating material of fuse holders, and terminal blocks.

2.5.1.6 Metal Enclosed Bus

Metal Enclosed Bus is bus that is enclosed and not part of an active component such as switchgear, load centers or motor control centers. There are typically three types of metal enclosed bus:

- Isolated Phase Bus
- Non-Segregated Phase Bus
- Segregated Phase Bus

The in-scope non-segregated phase bus and isolated phase bus supports the restoration of offsite power to meet the SBO requirements is in the scope of license renewal. The following component types are part of the non-segregated phase bus and isolated phase bus.

- Bus bar and connections
- Bus enclosure
- Bus Insulation and insulators

The function of the non-segregated phase bus, the isolated phase bus and bus bar and connections is to maintain electrical continuity between specified sections of an electrical circuit to deliver voltage and current.

The function of the bus enclosure is to provide for expansion and separation of the bus as well as structural support. The function of the bus insulation and insulators is to electrically insulate the bus bars from the enclosure and supports.

DCPP does not use segregated phase bus.

2.5.1.7 Switchyard Bus and Connections

The switchyard buses within the scope of license renewal are those associated with the power feeds from the switchyard to the plant that are used to connect the plant to the offsite power sources. These power feeds are required for the restoration of offsite power to meet the SBO requirements. The switchyard bus connects the high voltage transmission conductors to the switchyard circuit breakers.

The function of the switchyard buses is to maintain electrical continuity between specified sections of an electrical circuit to deliver voltage and current.

2.5.1.8 Terminal Blocks (not part of a larger assembly)

The terminal block component type includes terminal blocks not subject to environmental qualification requirements of 10 CFR 50.49 that are not part of active equipment. The terminal block insulating material is addressed with insulated cables and connections.

The function of the terminal block insulation is to electrically insulate sections of an electrical circuit signals from adjacent circuits and enclosures.

2.5.1.9 Transmission Conductors and Connections

The high voltage conductors and connections within the scope of license renewal are those associated with the power feeds from the switchyard to the plant that are used to connect the plant to the offsite power. These power feeds are required for the restoration of offsite power to meet the SBO requirements.

The function of the high voltage conductors and connectors is to maintain electrical continuity between offsite power to sources and various plant systems.

2.5.1.10 Lightning Rods

The lightning rods within the scope of license renewal are those mounted on the reactor containment building. Lightning rods are required to meet the requirements of the fire protection program.

The function of the lightning rods is to protect the containment structure, and personnel and components within, from lightning strikes.

2.5.1.11 Electrical Equipment Subject to 10 CFR 50.49 Environmental Qualification Requirements

Electrical equipment analyzed for 10 CFR 50.49 environmental qualification requirements is evaluated as a TLAA in Section 4.4 and is managed under the Environmental Qualification (EQ) of Electrical Components program, as described in Section B3.2.

2.5.1.12 Penetrations, Electrical

All primary containment electrical penetrations are environmentally qualified. The electrical continuity of the environmentally qualified penetrations is managed under the EQ Program which is evaluated as a time-limited aging analysis as described in

Section 4.4. The pressure boundary function of all electrical penetrations is evaluated in Section 2.4.1, Containment Building.

The functions of the primary containment electrical penetrations are to perform the function of primary containment boundary (structural pressure boundary) and electrical continuity across the primary containment boundary.

2.5.1.13 Grounding Conductors

Uninsulated grounding conductors bond metal raceways, building structural steel, and plant equipment to earth ground through an installed grounding grid. The uninsulated grounding conductors are nonsafety-related and provide for personnel and equipment protection. In the event of a fault in an electrical circuit or component, the grounding conductors provide a direct path to ground for the fault currents to minimize equipment damage. The grounding conductors do not prevent faults and are not required for equipment operation. Failure of a grounding conductor cannot affect the accomplishment of any safety functions. Therefore, the grounding conductors do not perform an intended function that meets the criteria of 10 CFR 54.4(a) and are not within the scope of license renewal.

2.5.1.14 Cable Tie Wraps

Cable tie wraps are used as an aid during cable installation to establish power cable spacing in cable trays. Once the cables have been installed and are in place, the cable's own weight in the tray and the inherent rigidity of the Class B copper stranding will continue to maintain the spacing. The power cables are sized to carry currents well in excess of load requirements with margin considering worst case routing. Tie wraps are not credited in DCPP seismic qualification of the cable tray support system.

The CLB and design documents were reviewed to determine that cable tie wraps perform no license renewal functions and failure of cable tie wraps would not prevent any safety-related equipment from performing its intended functions. DCPP has no CLB requirements that cable tie wraps remain functional during and following design basis events. Therefore, the tie wraps do not perform an intended function that meets the criteria of 10 CFR 54.4(a) and are not within the scope of license renewal.

2.5.2 Electrical Component Groups Subject to Aging Management Review

The electrical and instrument and control component groups requiring AMR and their intended functions are provided in Table 2.5-1 - Electrical and I&C Component Groups Requiring Aging Management Review.

Table 2.5-1 Electrical and I&C Component Groups Requiring Aging Management Review

Component Type	Intended Function
Cable Connections (Metallic Parts)	Electrical Continuity
Connector	Electrical Continuity
Fuse Holder	Electrical Continuity Insulate (Electrical)
High Voltage Insulator	Insulate (Electrical) Structural Support
Insulated Cable and Connections	Electrical Continuity Insulate (Electrical)
Lightning Rods	Electrical Continuity
Metal Enclosed Bus (Bus & Connections)	Electrical Continuity
Metal Enclosed Bus (Enclosure)	Expansion/Separation Structural Support
Metal Enclosed Bus (Insulation & Insulators)	Insulate (Electrical)
Switchyard Bus and Connections	Electrical Continuity
Terminal Block	Insulate (Electrical)
Transmission Conductors and Connections	Electrical Continuity

The AMR results for these component types are provided in Table 3.6.2-1, Electrical and Instrument and Controls – Summary of Aging Management Evaluation – Electrical Components.

CHAPTER 3

AGING MANAGEMENT REVIEW RESULTS

3.0 AGING MANAGEMENT REVIEW RESULTS

Chapter 3 provides the results of the aging management review (AMR) for those structures and component types identified in Chapter 2 as being subject to AMR. Organization of this chapter is based on Tables 1 through 6 of Volume 1 of NUREG-1801, *Generic Aging Lessons Learned (GALL)*, dated September 2005 and Chapter 3, Aging Management Review Results, of NUREG-1800, *Standard Review Plan for the Review of License Renewal Applications for Nuclear Power Plants*, Revision 1, dated September 2005.

The major sections of this chapter are:

- 3.1 Aging Management of Reactor Vessel, Internals, and Reactor Coolant System
- 3.2 Aging Management of Engineered Safety Features
- 3.3 Aging Management of Auxiliary Systems
- 3.4 Aging Management of Steam and Power Conversion System
- 3.5 Aging Management of Containments, Structures, and Component Supports
- 3.6 Aging Management of Electrical and Instrument and Controls

Descriptions of the internal and external service environments that were used in the AMR to determine aging effects requiring management are included in Table 3.0-1, Mechanical Environments, Table 3.0-2, Structural Environments, and Table 3.0-3, Electrical and Instrument and Controls Environments. The environments used in the AMRs are listed in the Evaluated Environment column.

The AMR results in Chapter 3 are presented in the following types of tables:

• **Table 3.x.1** - where '**3.x**' indicates the LRA section number from NUREG-1800, and '**1**' indicates that this is the first table type in Section 3.x. For example, in the Reactor Coolant System subsection, this table would be number 3.1.1. For ease of discussion, this table type will hereafter be referred to in this chapter as "Table 1."

• **Table 3.x.2-y** - where '**3.x**' indicates the LRA section number from NUREG-1800, and '**2**' indicates that this is the second table type in Section 3.x; and 'y' indicates the system table number. For example, for the Reactor Vessel and Internals, within the Reactor Vessel, Internals, and Reactor Coolant System subsection, the Table would be 3.1.2-1 and for the Reactor Coolant System, it would be Table 3.1.2-2. For the Containment Spray System, within the Engineered Safety Features subsection, this

Table would be Table 3.2.2-1. This table type will hereafter be referred to in this chapter as "Table 2."

Table Description

NUREG-1801 contains the staff's generic evaluation of existing plant programs. It documents the technical basis for determining where existing programs are adequate without modification, and where existing programs should be augmented for the extended period of operation. The evaluation results documented in the report indicate that many of the existing programs are adequate to manage the aging effects for particular structures or components, within the scope of license renewal, without change. The report also contains recommendations on specific areas for which existing programs should be augmented for license renewal. In order to take full advantage of NUREG-1801, a comparison between the AMR results and the tables of NUREG-1801 has been made. The results of that comparison are provided in the two tables.

Table 1

The purpose of Table 1 is to provide a summary comparison of how DCPP aligns with the corresponding tables of NUREG-1801, Volume 1. The table is similar to Tables 1 through 6 provided in NUREG-1801, Volume 1, except that the "Type" column and the “Unique Item” column are not included. The “ID” column has been replaced by an "Item Number" column and the "Related Generic Item" column has been replaced by a "Discussion" column. The "Item Number" column provides the reviewer with a means to cross-reference from Table 2 to Table 1. The "Discussion" column is used by the applicant to provide clarifying/amplifying information. The following are examples of information that might be contained within this column:

- "Further Evaluation Recommended" information or reference to where that information is located. The name of a plant specific program being used.
- Exceptions to the NUREG-1801 assumptions
- A discussion of how the line is consistent with the corresponding line item in NUREG-1801, Volume 1
- A discussion of how the item is different than the corresponding line item in NUREG-1801, Volume 1, when it may appear to be consistent (e.g., when there is exception taken to an aging management program that is listed in NUREG-1801, Volume 1)

The format of Table 1 provides the reviewer with a means of aligning a specific Table 1 line with the corresponding NUREG-1801, Volume 1 table line, thereby allowing for the ease of review.

Table 2

Table 2 provides the detailed results of the AMRs for those component types identified in Chapter 2 as being subject to AMR. There is a Table 2 for each of the systems and structures identified in Chapter 2 that have components within the scope of license renewal.

Table 2 consists of the following nine columns:

- Component Type
- Intended Function
- Material
- Environment
- Aging Effect Requiring Management
- Aging Management Program
- NUREG-1801 Volume 2 Item
- Table 1 Item
- Notes

Component Type

The first column identifies all of the component types from Chapter 2 that are subject to AMR. They are listed in alphabetical order.

Intended Function

The second column contains the license renewal intended functions (including abbreviations where applicable) for the listed component type. Definitions and abbreviations of intended functions are contained in Table 2.1-1, Intended Functions – Abbreviations and Definitions.

Material

The third column lists the particular materials of construction for the component types.

Environment

The fourth column lists the environments to which the component types are exposed. Internal and external environments are indicated and a listing and

descriptions of these environments is provided in Table 3.0-1, Mechanical Environments, Table 3.0-2, Structural Environments, and Table 3.0-3, Electrical and Instrument and Control Environments. The three tables compare the evaluated environments to the environments listed in NUREG-1801 tables and the NUREG-1801, Volume 2, Chapter 9.D environments. The description column and NUREG-1801 column of the three tables provides specific environment considerations to be used when determining the NUREG-1801 Volume 2 consistency that is presented in column seven of Table 2. For example, stainless steel components that are exposed to a treated borated water, secondary water, or closed cycle cooling water environment of >60°C (140°F), the aging effect of cracking would also apply.

Aging Effect Requiring Management

As part of the AMR process, aging effects requiring management for the material and environment combination in order to maintain the intended function of the component type are determined. These aging effects requiring management are listed in column five.

Aging Management Programs

The aging management programs used to manage the aging effects requiring management are listed in column six of Table 2.

NUREG-1801 Vol. 2 Item

Each combination of component type, material, environment, aging effect requiring management, and aging management program that is listed in Table 2, is compared to NUREG-1801, Volume 2 with consideration given to the standard notes, to identify consistencies. When they are identified, they are documented by noting the appropriate NUREG-1801, Volume 2 item number in column seven of Table 2. If there is no corresponding item number in NUREG-1801, Volume 2, this line in column seven is marked “none.” That way, a reviewer can readily identify where there is correspondence between the plant specific tables and the NUREG-1801, Volume 2 tables.

Table 1 Item

Each combination of component, material, environment, aging effect requiring management, and aging management program that has an identified NUREG-1801 Volume 2 item number must also have a Table 3.x.1 line item reference number. The corresponding line item from Table 1 is listed in column eight of Table 2. If

there is no corresponding item in NUREG-1801, Volume 1, this row in column eight is left blank. That way, the information from the two tables can be correlated.

Notes

In order to realize the full benefit of NUREG-1801, a series of notes is established to identify how the information in Table 2 aligns with the information in NUREG-1801, Volume 2. All note references with letters are standard notes that will be the same from application to application throughout the industry. Any notes the plant requires which are in addition to the standard notes will be identified by a number and deemed plant specific.

Standard Notes used in this application include:

A. Consistent with NUREG-1801 item for component, material, environment and aging effect. AMP is consistent with NUREG-1801 AMP.

B. Consistent with NUREG-1801 item for component, material, environment and aging effect. AMP takes some exceptions to NUREG-1801 AMP.

C. Component is different, but consistent with NUREG-1801 item for material, environment and aging effect. AMP is consistent with NUREG-1801 AMP.

D. Component is different, but consistent with NUREG-1801 item for material, environment and aging effect. AMP takes some exceptions to NUREG-1801 AMP.

E. Consistent with NUREG-1801 item for material, environment and aging effect, but a different aging management program is credited.

F. Material not in NUREG-1801 for this component.

G. Environment not in NUREG-1801 for this component and material.

H. Aging effect not in NUREG-1801 for this component, material, and environment combination.

I. Aging effect in NUREG-1801 for this component, material and environment combination is not applicable.

J. Neither the component nor the material and environment combination are evaluated in NUREG-1801.

The term “consistent with NUREG-1801” is defined in Section B1.1.

TABLE USAGE

Table 1

The reviewer evaluates each row in Table 1 by moving from left to right across the table. Since the Component Type, Aging Effect/Mechanism, Aging Management Programs and Further Evaluation Recommended information is taken directly from NUREG-1801, Volume 1, no further analysis of those columns is required. The information intended to help the reviewer the most in this table is contained within the discussion column. Here the reviewer is given information necessary to determine, in summary, how the DCPP evaluations and programs align with NUREG-1801, Volume 1. This may be in the form of descriptive information within the Discussion column or the reviewer may be referred to other locations within the LRA.

Table 2

Table 2 contains all of the AMR information for the plant, whether or not it aligns with NUREG-1801. For a given row within the table, the reviewer is able to see the intended function, material, environment, aging effect requiring management and aging management program combination for a particular component type within a system. In addition, if there is a correlation between the combination in Table 2 and a combination in NUREG-1801, Volume 2, this will be identified by a referenced item number in column seven, NUREG-1801, Volume 2 Item. The reviewer can refer to the item number in NUREG-1801, Volume 2, if desired, to verify the correlation. If the column is blank, the corresponding combination in NUREG-1801, Volume 2 is marked as “none.” As the reviewer continues across the table from left to right, within a given row, the next column is labeled Table 1 Item. If there is a reference number in this column, the reviewer is able to use that reference number to locate the corresponding row in Table 1 and see how the aging management program for this particular combination aligns with NUREG-1801.

Table 2 provides the reviewer with a means to navigate from the component types subject to AMR in Chapter 2 all the way through the evaluation of the programs that will be used to manage the effects of aging of those component types.

A listing of the acronyms used in this chapter is provided in Section 1.5.

Table 3.0-1 Mechanical Environments

Mechanical Environments		
Evaluated Environment	**NUREG-1801 Environment**	**Description**
Internal		
Demineralized Water	Treated Water	Demineralized water or chemically purified water which is the source for water in all clean systems such as the primary or secondary coolant systems. Demineralized water is monitored for quality under the Water Chemistry program and depending on the system; demineralized water may require additional processing.
Treated Borated Water	Treated Borated Water	Treated water with boric acid that is monitored for quality under the Water Chemistry program.
	Treated Borated Water >60º C (140º F) [SCC Threshold for Stainless Steel]	
	Treated Borated Water >250º C (482º F) [Thermal Embrittlement Threshold for CASS]	

Table 3.0-1 Mechanical Environments (Continued)

Mechanical Environments		
Evaluated Environment	**NUREG-1801 Environment**	**Description**
Reactor Coolant	Reactor Coolant	Water in reactor coolant systems at or near full operating temperature that is treated and monitored for quality under the Water Chemistry program.
	Reactor Coolant >250º C (>482º F) [Thermal Embrittlement Threshold for CASS]	
	Reactor Coolant and Neutron Flux [Neutron Irradiation Embrittlement]	
	Reactor Coolant >250º C (>482º F) and Neutron Flux [[Thermal Embrittlement Threshold for CASS and Neutron Irradiation Embrittlement]	
	Reactor Coolant and Secondary Feedwater/Steam [TLAA IV.D1-21]	
	Reactor Coolant/Steam [RCS Piping IV.C2-13 and Pressurizer IV. C2-24]	
Secondary Water	Steam	Steam generator secondary systems water (including condensate, feedwater and steam) that is treated and monitored for quality under the Water Chemistry program and controlled for protection of steam generators.
	Treated Water	
	Treated Water >60º C (140º F) [SCC Threshold for Stainless Steel]	
	Secondary Feedwater/Steam	
	Secondary Feedwater	
Steam	Steam	Secondary water that has been converted to steam or heating and process steam produced from the auxiliary boiler.
	Secondary Feedwater/Steam	
Closed Cycle Cooling Water	Closed Cycle Cooling Water	Water for component cooling that is treated and monitored for quality under the Closed-Cycle Cooling Water System program.
	Closed Cycle Cooling Water >60º C (140º F) [SCC Threshold for Stainless Steel]	
	Treated Water	

Table 3.0-1 Mechanical Environments (Continued)

Mechanical Environments		
Evaluated Environment	**NUREG-1801 Environment**	**Description**
Raw Water	Raw Water	Water from the circulating water system or ultimate heat sink for use in open-cycle cooling systems. Floor drains and building sumps may be exposed to a variety of untreated water that is classified as raw water for the determination of aging effects. Raw water may contain contaminants, including oil and boric acid, as well as originally treated water that is not monitored by a chemistry program.
Lubricating Oil	Lubricating Oil	Lube oils are low-to-medium viscosity hydrocarbons, with the possibility of containing contaminants and/or moisture, used for bearing, gear, and engine lubrication. Lube oil is monitored for the possibility of water by the Lubricating Oil Analysis program.
Fuel Oil	Fuel Oil	Diesel fuel oil or liquid hydrocarbons used to fuel diesel engines. Fuel oil is monitored for the possibility of water and microbiological organisms by the Fuel Oil Chemistry program.
Dry Gas	Dried Air [Common Miscellaneous Material/Environments]	Internal gas environments from dry air (conditioned to reduce the dew point well below the system operating temperature), inert or non-reactive gases. Includes compressed instrument air, nitrogen, oxygen, hydrogen, helium, halon, CO_2 or freon.
	Gas [Common Miscellaneous Material/Environments]	
Diesel Exhaust	Diesel Exhaust [VII H2-1 & H2-2]	Gases, fluids, particles present in diesel engine exhaust.
Ventilation Atmosphere	Air – Indoor Uncontrolled	Atmospheric/room/building air for ventilation systems with temperatures higher than the dew point. Condensation can occur but only rarely, equipment surfaces are normally dry. Ventilation atmosphere is evaluated with the NUREG-1801 environment of
	Condensation (Internal)	
	Air – Indoor Uncontrolled (Internal/External)	

Table 3.0-1 Mechanical Environments (Continued)

Mechanical Environments		
Evaluated Environment	**NUREG-1801 Environment**	**Description**
	Air – Indoor Controlled (External)	condensation when the air contains significant amounts of moisture (enough to cause loss of material) and the internal surface or external surface have temperatures below the dew point. Ventilation atmosphere is evaluated with the NUREG-1801 environment of condensation when used for the drains associated with the internal or external surfaces exposed to condensation. Ventilation atmosphere environments evaluated with condensation are considered to be potentially aggressive when surface contaminants are present. Also the environment to which the external surface of components inside HVAC systems is exposed.
Plant Indoor Air	Condensation (Internal)	Indoor air or non-dried compressed gas with temperatures higher than the dew point. Condensation can occur, but only rarely; equipment surfaces are normally dry. Plant indoor air (internal) or non-dried compressed gas is evaluated with the NUREG-1801 environment of condensation when the air contains significant amount s of moisture (enough to cause loss of material) and the internal surface has temperatures below the dew point. Plant Indoor Air is evaluated with the NUREG-1801 environment of condensation when used for the drains associated with the internal surfaces exposed to condensation. Plant indoor air environments evaluated with condensation or moist air are considered to be potentially aggressive when surface contaminants are present.
	Air [Glass Piping Elements VII.J-7 and VIII.I-4]	
	Moist Air or Condensation [Diesel Piping Components VII.H2-21]	
Potable Water	This Environment is not in NUREG-1801	Water treated for drinking or other personnel uses.
Sodium Hydroxide	This Environment is not in NUREG-1801	Treated water with elevated pH due to the presence of NaOH or LiOH. Sodium hydroxide and Lithium Hydroxide are used in the regeneration process for demineralizer resins, and as a water treatment chemical to achieve and maintain an elevated pH in some treated water applications.

Table 3.0-1 Mechanical Environments (Continued)

Mechanical Environments		
Evaluated Environment	**NUREG-1801 Environment**	**Description**
Sulfuric Acid	This Environment is not in NUREG-1801	Treated water with reduced pH due to the presence of H_2SO_4. Sulfuric acid is used in the regeneration process for demineralizer resins and to neutralize waste streams.
External		
Plant Indoor Air	Air – Indoor Uncontrolled (External)	Indoor air with temperatures higher than the dew point. Condensation can occur, but only rarely; equipment surfaces are normally dry. Plant indoor air is evaluated with the NUREG-1801 environment of condensation when the air contains significant amounts of moisture (enough to cause loss of material) and the external surface has temperatures below the dew point. Plant indoor air is evaluated with the NUREG-1801 environment of condensation when used for the drains associated with the external surfaces exposed to condensation. Plant indoor air environments evaluated with condensation or moist air are considered to be potentially aggressive when surface contaminants are present.
	Air – Indoor Uncontrolled (Internal/External)	
	Air Indoor	
	Air – Indoor Controlled (External) [VII.J-1 and VIII.I-13]	
	Air With Leaking Secondary Side Water and/or Steam [Steam Generator (Once Through) – IV.D2-5]	
	Air With Steam or Water Leakage [Closure Bolting]	
	Condensation (External)	
Borated Water Leakage	Air With Reactor Coolant Leakage.	The borated water leakage environment applies in plant indoor and outdoor areas that include components and systems that contain borated water and that could leak on nearby components or structures.
	Air With Borated Water Leakage.	
	Air With Reactor Coolant Leakage (Internal) (RPV Leak Detection Line IV.A2-5)	
	Air With Metal Temperature up to 288º C (550º F) [Pressurizer Integral Support - IV.C2-16]	
	System Temperature up to 340º C (644º F) [Steam Generator Closure Bolting and TLAA]	
Atmosphere/ Weather	Air – Outdoor	The atmosphere/weather environment consists of moist, ambient temperatures, humidity, and exposure to weather, including precipitation and wind. The component is exposed to air and local
	Air – Outdoor (External) (includes salt-laden atmospheric air and salt water spray)	

Table 3.0-1 Mechanical Environments (Continued)

Mechanical Environments		
Evaluated Environment	**NUREG-1801 Environment**	**Description**
	Air – Indoor and Outdoor	weather conditions. Temperature extremes range from 24°F to 104°F.
Buried	Soil	Components/equipment that are buried in soil. Soil is a mixture of inorganic materials produced by the weathering of rocks and clays, and organic material produced by decomposition of vegetation. Voids containing air and moisture occupy about 50 percent of the soil volume. Properties of soil that can affect aging include water content, pH, ion exchange capacity, density, and permeability. External environment for components exposed to soil (including air/soil interface) or buried in the soil, including groundwater in the soil. The groundwater has been determined to be non-aggressive.
Submerged (Note: Use Appropriate Internal Environment)	Use Appropriate Internal Environment	Components/equipment that are completely or partially submerged in: • Water (operating or process fluid) • Oil/fluids (lube, fuel, electro-hydraulic, etc.) The environment for submerged components will be identified using one of the internal environments previously identified.
Encased in Concrete	Concrete	Piping or components that are encased in concrete.

Table 3.0-2 Structural Environments

Structural Environments		
Evaluated Environment	**NUREG-1801 Environment**	**Description**
Plant Indoor Air (Structural)	Any [Reaction With Aggregates]	Structures are subject to the same conditions covered in Plant Indoor Air External Mechanical Environment. Indoor air on structures with temperatures higher than the dew point, i.e., condensation can occur but only rarely, structural surfaces are normally dry.
	Air - Indoor Uncontrolled	
	Soil [Cracks and Distortion Due to Increased Stress Levels From Settlement]	
	Various [Elastomers III A6-12]	
Atmosphere/ Weather (Structural)	Any [Reaction With Aggregates]	Structures are subject to the same conditions covered in Atmosphere/Weather External Mechanical Environment. The atmosphere/weather environment consists of moist, ambient temperatures, humidity, and exposure to weather, including precipitation and wind. The component is exposed to air and local weather conditions. Temperature extremes range from 24° F to 104° F.
	Air – Outdoor (includes salt-laden atmospheric air and salt water spray)	
	Soil [Cracks and Distortion Due to Increased Stress Levels From Settlement]	
	Water - Flowing[Leaching of Calcium Hydroxide, Loss of Material, Loss Of Form]	
	Various [Elastomers III A6-12]	
Borated Water Leakage	Air With Borated Water Leakage [Supports]	The borated water leakage environment applies in plant indoor and outdoor areas that include components and systems that contain borated water and that could leak on nearby components or structures.

Table 3.0-2 Structural Environments (Continued)

Structural Environments		
Evaluated Environment	**NUREG-1801 Environment**	**Description**
Encased in Concrete	Not a NUREG-1801 Structural Environment: See NUREG-1801 Mechanical Item	Components that are encased in concrete.
Buried (Structural)	Any [Reaction With Aggregates]	Structures/components that are buried in soil. Soil is a mixture of inorganic materials produced by the weathering of rocks and clays, and organic material produced by decomposition of vegetation. Voids containing air and moisture occupy about 50 percent of the soil volume. Properties of soil that can affect aging include water content, pH, ion exchange capacity, density, and permeability. The groundwater has been determined to be non-aggressive. Structures/components that are buried and may be exposed to: • Soil, dry under normal conditions • Soil with groundwater present • Flowing water causing possible leaching condition • Foundation aging • Soft soil and settlement issues • An aggressive environment caused by contaminants in the soil
	Groundwater/Soil	
	Soil [Cracks and Distortion Due to Increased Stress Levels From Settlement]	
	Water – Flowing [Leaching of Calcium Hydroxide]	
	Air – Outdoor [Freeze Thaw]	
	Water - Flowing Under Foundation [Porous Concrete Sub-foundation]	
	Various [Elastomers III A6-12]	
Submerged (Structural)	Water – Standing [Tanks, Earthen Water Control Structures, and Water Control Structures Metal Components]	Structures that are completely or partially covered, or structures that are partially filled (such as tanks, sumps, etc.) with: • Water (operating or process fluid) • Oil/fluids (lube, fuel, electro-hydraulic, etc.) Structures that are exposed to flowing water conditions potentially causing: • Abrasion • Cavitation • Leaching • Loss of Material • Loss of Form
	Water – Flowing (includes Raw Water which includes untreated salt water) [Abrasion/Cavitation (concrete), Earthen Water Control Structures, and Water Control Structures Metal Components]	
	Treated Water or Treated Borated Water [Fuel Pool Liner]	
	Treated Water <60ºC (<140ºF) [Supports]	

Table 3.0-3 Electrical and Instrument and Controls Environments

Electrical Environments		
Evaluated Environment	**NUREG-1801 Environment**	**Description**
Plant Indoor Air	Air Indoor	Indoor air on electrical components with temperatures higher than the dew point, i.e., condensation can occur but only rarely, equipment surfaces are normally dry.
Atmosphere/Weather	Air Outdoors	The atmosphere/weather environment consists of moist, ambient temperatures, humidity, and exposure to weather, including precipitation and wind. The component is exposed to air and local weather conditions including salt spray. Temperature extremes range from 24° F to 104° F. There is no exposure to industry air pollution or other aggressive contaminants.
Borated Water Leakage	Air with Borated Water Leakage	The borated water leakage environment applies in plant indoor and outdoor areas that include components and systems that contain borated water and that could leak on nearby components or structures.
Adverse Localized Environment	Adverse localized environment caused by heat, radiation, or moisture in the presence of oxygen	Adverse localized environments can be due to any of the following: (1) exposure to moisture and voltage (2) heat, radiation, or moisture, in the presence of oxygen (3) heat, radiation, or moisture, in the presence of oxygen or >60-year service limiting temperature, or (4) adverse localized environment caused by heat, radiation, oxygen, moisture, or voltage. The term “>60-year service limiting temperature” refers to that temperature that exceeds the temperature below which the material has a 60-year or greater service lifetime.

3.1 AGING MANAGEMENT OF REACTOR VESSEL, INTERNALS, AND REACTOR COOLANT SYSTEM

3.1.1 Introduction

Section 3.1 provides the results of the aging management reviews (AMRs) for those component types identified in Section 2.3.1, Reactor Vessel, Internals, and Reactor Coolant System, subject to AMR. These systems are described in the following sections:

- Reactor Vessel and Internals (Section 2.3.1.1)
- Reactor Coolant System (Section 2.3.1.2)
- Pressurizer (Section 2.3.1.3)
- Steam Generators (Section 2.3.1.4)

Table 3.1.1, Summary of Aging Management Evaluations in Chapter IV of NUREG-1801 for Reactor Vessel, Internals, and Reactor Coolant System, provides the summary of the programs evaluated in NUREG-1801 that are applicable to the component types in this section. Table 3.1.1 uses the format of Table 1 described in Section 3.0.

3.1.2 Results

The following tables summarize the results of the AMR for the systems in the Reactor Vessel, Internals, and Reactor Coolant System area:

- Table 3.1.2-1 Reactor Vessel, Internals, and Reactor Coolant System – Summary of Aging Management Evaluation – Reactor Vessel and Internals
- Table 3.1.2-2 Reactor Vessel, Internals, and Reactor Coolant System – Summary of Aging Management Evaluation – Reactor Coolant System
- Table 3.1.2-3 Reactor Vessel, Internals, and Reactor Coolant System – Summary of Aging Management Evaluation – Pressurizer
- Table 3.1.2-4 Reactor Vessel, Internals, and Reactor Coolant System – Summary of Aging Management Evaluation – Steam Generators

These tables use the format of Table 2 discussed in Section 3.0.

3.1.2.1 Materials, Environments, Aging Effects Requiring Management and Aging Management Programs

The materials from which the component types are fabricated, the environments to which they are exposed, the potential aging effects requiring management, and the aging management programs used to manage these aging effects are provided for each of the above systems in the following subsections.

3.1.2.1.1 Reactor Vessel and Internals

Materials

The materials of construction for the reactor vessel and internals component types are:

- Carbon Steel
- Carbon Steel with Stainless Steel Cladding
- High Strength Low Alloy Steel (Bolting)
- Nickel-Alloys
- Stainless Steel
- Stainless Steel Cast Austenitic

Environment

The reactor vessel and internals components are exposed to the following environments:

- Borated Water Leakage
- Reactor Coolant

Aging Effects Requiring Management

The following reactor vessel and internals aging effects require management:

- Changes in dimensions
- Cracking
- Loss of fracture toughness

- Loss of material
- Loss of preload

Aging Management Programs

The following aging management programs manage the aging effects for the reactor vessel and internals component types:

- ASME Section XI Inservice Inspection, Subsections IWB, IWC, and IWD (B2.1.1)
- Boric Acid Corrosion (B2.1.4)
- Flux Thimble Tube Inspection (B2.1.21)
- Nickel-Alloy Aging Management (B2.1.37)
- Nickel-Alloy Penetration Nozzles Welded to the Upper Reactor Vessel Closure Heads of Pressurized Water Reactors (B2.1.5)
- Reactor Head Closure Studs (B2.1.3)
- Reactor Vessel Surveillance (B2.1.15)
- Water Chemistry (B2.1.2)

For Reactor Coolant System Nickel-Alloy Pressure Boundary Components, PG&E will:

(1) Implement applicable NRC Orders, Bulletins and Generic Letters associated with nickel-alloys; (2) implement staff-accepted industry guidelines, (3) participate in the industry initiatives, such as owners group programs and the EPRI Materials Reliability Program, for managing aging effects associated with nickel-alloys, and (4) upon completion of these programs, but not less than 24 months before entering the period of extended operation, PG&E will submit an inspection plan for reactor coolant system nickel-alloy pressure boundary components to the NRC for review and approval.

For Reactor Vessel Internals, PG&E will:

(1) Participate in the industry programs for investigating and managing aging effects on reactor internals; (2) evaluate and implement the results of the industry programs as applicable to the reactor internals; and (3) upon completion of these programs, but not less than 24 months before entering the period of extended operation, PG&E will submit an inspection plan for reactor internals to the NRC for review and approval.

3.1.2.1.2 Reactor Coolant System

Materials

The materials of construction for the reactor coolant system component types are:

- Carbon Steel
- Insulation Calcium Silicate
- Stainless Steel
- Stainless Steel Cast Austenitic

Environment

The reactor coolant system component types are exposed to the following environments:

- Borated Water Leakage
- Closed-Cycle Cooling Water
- Demineralized Water
- Dry Gas
- Plant Indoor Air
- Reactor Coolant
- Treated Borated Water

Aging Effects Requiring Management

The following reactor coolant system aging effects require management:

- Cracking
- Loss of fracture toughness
- Loss of material
- Loss of preload
- Reduction of heat transfer

Aging Management Programs

The following aging management programs manage the aging effects for the reactor coolant system component types:

- ASME Section XI Inservice Inspection, Subsections IWB, IWC, and IWD (B2.1.1)
- Bolting Integrity (B2.1.7)
- Boric Acid Corrosion (B2.1.4)
- Closed-Cycle Cooling Water System (B2.1.10)
- External Surfaces Monitoring Program (B2.1.20)
- Inspection of Internal Surfaces in Miscellaneous Piping and Ducting Components (B2.1.22)
- One-Time Inspection (B2.1.16)
- One-Time Inspection of ASME Code Class 1 Small-Bore Piping (B2.1.19)
- Thermal Aging Embrittlement of Cast Austenitic Stainless Steel (CASS) (B2.1.39)
- Water Chemistry (B2.1.2)

3.1.2.1.3 Pressurizer

Materials

The materials of construction for the pressurizer component types are:

- Carbon Steel
- Carbon Steel with Stainless Steel Cladding
- Nickel-Alloys
- Stainless Steel
- Stainless Steel Cast Austenitic

Environment

The pressurizer component types are exposed to the following environments:

- Borated Water Leakage

- Reactor Coolant

Aging Effects Requiring Management

The following pressurizer aging effects require management:

- Cracking
- Loss of material
- Loss of preload

Aging Management Programs

The following aging management programs manage the aging effects for the pressurizer component types:

- ASME Section XI Inservice Inspection, Subsections IWB, IWC, and IWD (B2.1.1)
- Bolting Integrity (B2.1.7)
- Boric Acid Corrosion (B2.1.4)
- One-Time Inspection (B2.1.16)
- Water Chemistry (B2.1.2)

3.1.2.1.4 Steam Generators

Materials

The materials of construction for the steam generator component types are:

- Carbon Steel
- Carbon Steel with Stainless Steel Cladding
- Nickel-Alloys
- Stainless Steel

Environment

The steam generator component types are exposed to the following environments:

- Borated Water Leakage
- Plant Indoor Air

- Reactor Coolant
- Secondary Water

Aging Effects Requiring Management

The following steam generator aging effects require management:

- Cracking
- Loss of material
- Loss of preload
- Wall thinning

Aging Management Programs

The following aging management programs manage the aging effects for the steam generator component types:

- ASME Section XI Inservice Inspection, Subsections IWB, IWC, and IWD (B2.1.1)
- Bolting Integrity (B2.1.7)
- Boric Acid Corrosion (B2.1.4)
- External Surfaces Monitoring Program (B2.1.20)
- Flow-Accelerated Corrosion (B2.1.6)
- Steam Generator Tubing Integrity (B2.1.8)
- Water Chemistry (B2.1.2)

3.1.2.2 Further Evaluation of Aging Management as Recommended by NUREG-1801

NUREG-1801 provides the basis for identifying those programs that warrant further evaluation by the reviewer in the License Renewal Application. For the reactor vessel, internals, and reactor coolant system, those evaluations are addressed in the following subsections.

3.1.2.2.1 Cumulative Fatigue Damage

Analysis of cumulative fatigue damage in the reactor pressure vessel and internals; reactor coolant pumps, pressurizer; primary side of the steam generators; reactor

coolant pressure boundary piping, and of those steam generator secondary-side components with a fatigue analysis are time-limited aging analyses (TLAAs) as defined in 10 CFR 54.3. TLAAs are evaluated in accordance with 10 CFR 54.21(c)(1).

[3.1.1.05] The structural integrity of the reactor internals design has been ensured by analyses performed on both a generic and plant-specific basis. Section 4.3.3 describes the disposition of these TLAAs.

[3.1.1.06] Cumulative fatigue damage of steam generator tubes is not a TLAA as defined in 10 CFR 54.3. See Section 4.3.2.5.

[3.1.1.07] Reactor coolant pressure boundary closure bolting, reactor vessel closure head bolts and reactor coolant pump bolting), and pressurizer support skirt are designed to ASME III Class A, with a fatigue analysis. The steam generator secondary-side pressure boundaries, nozzles, and closure bolting have Class 1 fatigue analysis. The pressurizer relief tank is not an ASME III Class 1 component, nor is it designed to other fatigue or cyclic design rules, and therefore is not a TLAA as defined in 10 CFR 54.3.

Section 4.3.2.1 describes the disposition of TLAAs for reactor vessel closure head bolting.

Section 4.3.2.3 describes the disposition of TLAAs for the reactor coolant pump closure bolting.

Section 4.3.2.4 describes the disposition of TLAAs for pressurizer support skirt and attachment welds.

Section 4.3.2.5 describes the disposition of TLAAs for steam generator secondary-side pressure boundaries, nozzles, and closure bolting.

[3.1.1.08] Reactor coolant pressure boundary (RCPB) piping is designed to ANSI B31.1 standards that do not require an ASME III Class A or Class 1 fatigue analysis. However, stress range reduction factors assumed for design of B31.1 piping are a TLAA, and a fatigue analysis of the pressurizer surge line in response to NRC Bulletin 88-11 is a TLAA. Pressurizer vessel shell heads, welds, flanges, nozzles, safe ends, heater sheaths and sleeves, penetrations, and thermal sleeves are subject to ASME Section III fatigue analysis.

Section 4.3.2.4 describes the disposition of TLAAs for the pressurizer.

Section 4.3.2.9 describes the disposition of TLAAs for the pressurizer surge Line

Section 4.3.4 describes the evaluation of the effects that the reactor coolant environment has on fatigue of RCPB components.

Section 4.3.5 describes the disposition of TLAAs for stress range reduction factor TLAAs.

[3.1.1.09] The reactor vessels are subject to an ASME Boiler and Pressure Vessel Code Section III fatigue analysis.

Section 4.3.2.1 describes the disposition of TLAAs for the reactor vessels including the shell, flanges, penetrations, welds, nozzles, and safe ends.

Section 4.3.2.2 describes the disposition of reactor vessel heads and control rod drive mechanism housings.

[3.1.1.10] The replacement steam generators are ASME boiler and pressure vessel code Section III Class 1 primary side, and Class 2 on the secondary side. The applicable fatigue analyses are TLAAs.

Section 4.3.2.5 describes the disposition of TLAAs for steam generator primary and secondary pressure boundaries.

3.1.2.2.2 Loss of Material due to General, Pitting, and Crevice Corrosion

3.1.2.2.2.1 PWR steam generator shell assembly exposed to feedwater and steam

Not applicable. DCPP has recirculating steam generators, not once-through steam generators, so the applicable NUREG-1801 line was not used.

3.1.2.2.2.2 BWR isolation condenser components exposed to reactor coolant

Not applicable to DCPP, applicable to BWR only.

3.1.2.2.2.3 Reactor vessel components exposed to reactor coolant

Not applicable to DCPP, applicable to BWR only.

3.1.2.2.2.4 Steam generator shell and transition cone exposed to secondary feedwater and steam

Augmented inspection is recommended for Westinghouse Model 44 and 51 steam generators, where a high stress region exists at the shell to transition cone weld, if

general and pitting corrosion of the shell is known to exist. The DCPP steam generators are Westinghouse Model Delta 54, so the augmented inspection is not applicable.

3.1.2.2.3 Loss of Fracture Toughness due to Neutron Irradiation Embrittlement

3.1.2.2.3.1 Loss of Fracture Toughness due to Neutron Irradiation Embrittlement - TLAA

Evaluation of loss of fracture toughness is a TLAA as defined in 10 CFR 54.3. TLAAs are evaluated in accordance with 10 CFR 54.21(c)(1).

For the Unit 2 reactor vessel, recent coupon examinations demonstrated that beltline materials will remain limiting, and that adequate adjusted reference temperature, upper shelf energy, and pressurized thermal shock screening temperature margin will remain at the end of the period of extended operation; and therefore that subsequent revisions to pressure-temperature limits will provide adequate operating margin, without the use of special methods.

For the Unit 1 reactor vessel, PG&E will implement the revised PTS rule, 10 CFR 50.61a, at least three years prior to exceeding the PTS screening criterion of 10 CFR 50.61. In the event that the provisions of 10 CFR 50.61a cannot be met, PG&E will implement alternate options, such as flux reduction, as provided in 10 CFR 50.61.

An evaluation of the axial fluence distribution for the reactor vessel nozzles found that the projected embrittlement parameters for these materials will not be limiting.

Loss of fracture toughness for the reactor vessel shell and nozzles is managed with the Reactor Vessel Surveillance program (B2.1.15). Section 4.2 describes the disposition of these neutron embrittlement TLAAs.

3.1.2.2.3.2 Loss of Fracture Toughness due to Neutron Irradiation Embrittlement – Reactor Vessel Surveillance program

The Reactor Vessel Surveillance Program (B2.1.15) manages loss of fracture toughness due to neutron irradiation embrittlement in the reactor vessel beltline shell, nozzles, and welds exposed to reactor coolant and neutron flux. The DCPP Reactor Vessel Surveillance Program (B2.1.15) and the results of its evaluation for license renewal are presented in Appendix B.

3.1.2.2.4 Cracking due to Stress Corrosion Cracking (SCC) and Intergranular Stress Corrosion Cracking (IGSCC)

3.1.2.2.4.1 BWR top head enclosure, vessel flange leak detection lines

Not applicable to DCPP, applicable to BWR only.

3.1.2.2.4.2 BWR isolation condenser components exposed to reactor coolant

Not applicable to DCPP, applicable to BWR only.

3.1.2.2.5 Crack Growth due to Cyclic Loading

No underclad flaws have been detected or analyzed for the current licensed operating period for the DCPP reactor vessel shell SA508-Cl 2 forgings clad with high-heat-input welding processes (inlet and outlet nozzles, the reactor vessel flange, and the closure head flange). Therefore crack growth due to cyclic loading of reactor vessel shell fabricated of SA508-CL2 forgings clad with stainless steel using a high-heat input welding process is not a TLAA as defined in 10 CFR 54.3. See Section 4.7.3.

3.1.2.2.6 Loss of Fracture Toughness due to Neutron Irradiation Embrittlement and Void Swelling

Loss of fracture toughness due to neutron irradiation embrittlement and void swelling for stainless steel reactor internals components exposed to reactor coolant will be managed by (1) participating in the industry programs for investigating and managing aging effects on reactor internals; (2) evaluating and implementing the results of the industry programs as applicable to the reactor internals; and (3) upon completion of these programs, but not less than 24 months before entering the period of extended operation, submitting an inspection plan for reactor internals to the NRC for review and approval.

3.1.2.2.7 Cracking due to Stress Corrosion Cracking

3.1.2.2.7.1 PWR stainless steel reactor vessel flange leak detection lines

For managing the aging of cracking due to stress corrosion cracking for stainless steel high pressure conduits (flux thimble guide tubes to seal table) exposed to reactor coolant, Water Chemistry (B2.1.2) will be augmented by ASME Section XI Inservice Inspection, Subsections IWB, IWC, and IWD (B2.1.1). For stainless steel flux thimble tube exposed to reactor coolant, cracking due to SCC is managed by

Water Chemistry (B2.1.2). The DCPP reactor vessel flange leak detection line is made of nickel-alloy.

3.1.2.2.7.2 CASS reactor coolant system piping and components exposed to reactor coolant

For managing the aging of cracking due to stress corrosion cracking for cast austenitic stainless steel piping components exposed to reactor coolant, Water Chemistry (B2.1.2) will be augmented by ASME Section XI Inservice Inspection, Subsections IWB, IWC, and IWD (B2.1.1) to ensure that adequate inspection methods ensure detection of cracks.

The susceptibility to thermal aging embrittlement will be evaluated in the Thermal Aging Embrittlement of Cast Austenitic Stainless Steel program (B2.1.39). Aging management for components that are determined to be susceptible to thermal aging embrittlement is accomplished through either enhanced volumetric examinations or component-specific flaw tolerance evaluations. Additional inspection or evaluations are not required for components that are determined not to be susceptible to thermal aging embrittlement.

3.1.2.2.8 Cracking due to Cyclic Loading

3.1.2.2.8.1 BWR jet pump sensing lines

Not applicable to DCPP, applicable to BWR only.

3.1.2.2.8.2 BWR isolation condenser components exposed to reactor coolant

Not applicable to DCPP, applicable to BWR only.

3.1.2.2.9 Loss of Preload due to Stress Relaxation

Loss of preload due to stress relaxation for nickel-alloy and stainless steel reactor internals components exposed to reactor coolant will be managed by (1) participating in the industry programs for investigating and managing aging effects on reactor internals; (2) evaluating and implementing the results of the industry programs as applicable to the reactor internals; and (3) upon completion of these programs, but not less than 24 months before entering the period of extended operation, submitting an inspection plan for reactor internals to the NRC for review and approval.

3.1.2.2.10 Loss of Material due to Erosion

Not applicable. DCPP steam generators do not have feedwater impingement plates, so the applicable NUREG-1801 line was not used.

3.1.2.2.11 Cracking due to Flow Induced Vibration

Not applicable to DCPP, applicable to BWR only.

3.1.2.2.12 Cracking due to Stress Corrosion Cracking and Irradiation-Assisted Stress Corrosion Cracking (IASCC)

For managing the aging of cracking due to stress corrosion cracking and irradiation-assisted stress corrosion cracking of stainless steel reactor internals components exposed to reactor coolant, Water Chemistry (B2.1.2) is augmented by (1) participating in the industry programs for investigating and managing aging effects on reactor internals; (2) evaluating and implementing the results of the industry programs as applicable to the reactor internals; and (3) upon completion of these programs, but not less than 24 months before entering the period of extended operation, submitting an inspection plan for reactor internals to the NRC for review and approval.

3.1.2.2.13 Cracking due to Primary Water Stress Corrosion Cracking (PWSCC)

For managing the aging of cracking due to primary water stress corrosion cracking of reactor vessel internal nickel alloy components exposed to reactor coolant, Water Chemistry (B2.1.2) and Inservice Inspection (IWB, IWC, and IWD) (B2.1.1) will be augmented by a plant-specific Nickel Alloy Aging Management (B2.1.37) (pressure boundary components only), and comply with applicable NRC Orders and provide a commitment in the FSAR supplement to implement applicable (1) Bulletins and Generic Letters and (2) staff-accepted industry guidelines).

For managing the aging of cracking due to primary water stress corrosion cracking of pressurizer and steam generator components made of Alloy 690 exposed to reactor coolant, Inservice Inspection, (IWB, IWC, and IWD) (B2.1.1) and Water Chemistry (B2.1.2) are credited.

3.1.2.2.14 Wall Thinning due to Flow-Accelerated Corrosion

Feedring wall thinning was described in NRC Information Notice 91-19. The condition in NRC Information Notice 91-19 is specific to Combustion Engineering steam generators. DCPP has Westinghouse Delta 54 steam generators, therefore no action is required, however, the Water Chemistry (B2.1.2) and the Steam Generator Tubing Integrity (B2.1.8) are conservatively credited to manage wall thinning due to flow-accelerated corrosion for the feedring.

3.1.2.2.15 Changes in dimensions due to Void Swelling

Changes in dimensions due to void swelling for stainless steel reactor internals components exposed to reactor coolant will be managed by (1) participating in the industry programs for investigating and managing aging effects on reactor internals; (2) evaluating and implementing the results of the industry programs as applicable to the reactor internals; and (3) upon completion of these programs, but not less than 24 months before entering the period of extended operation, submitting an inspection plan for reactor internals to the NRC for review and approval.

3.1.2.2.16 Cracking due to Stress Corrosion Cracking and Primary Water Stress Corrosion Cracking

3.1.2.2.16.1 Steam generator heads, tubesheets, and welds made or clad with stainless steel

For steam generator components, DCPP has recirculating steam generators, not once-through steam generators, so the applicable NUREG-1801 line for once-through steam generators was not used.

For stainless steel components of CRDM housings and CRDM penetrations that are exposed to reactor coolant, Water Chemistry (B2.1.2) and ASME Section XI Inservice Inspection, Subsections IWB, IWC, and IWD (B2.1.1) manages cracking due to stress corrosion cracking.

3.1.2.2.16.2 Pressurizer spray head cracking

Water Chemistry (B2.1.2) and the One-Time Inspection (B2.1.16) manages cracking due to stress corrosion cracking and primary water stress corrosion cracking for stainless steel components exposed to reactor coolant. The One-Time Inspection (B2.1.16) will include selected components at susceptible locations where contaminants could accumulate (e.g. stagnant flow locations).

3.1.2.2.17 Cracking due to Stress Corrosion Cracking, Primary Water Stress Corrosion Cracking, and Irradiation-Assisted Stress Corrosion Cracking

For managing the aging of cracking due to stress corrosion cracking, primary water stress corrosion cracking, and irradiation-assisted stress corrosion cracking of stainless steel reactor internals components exposed to reactor coolant, Water Chemistry (B2.1.2) will be augmented by (1) participating in the industry programs for investigating and managing aging effects on reactor internals; (2) evaluating and implementing the results of the industry programs as applicable to the reactor internals; and (3) upon completion of these programs, but not less than 24 months before entering the period of extended operation, submitting an inspection plan for reactor internals to the NRC for review and approval.

3.1.2.2.18 Quality Assurance for Aging Management of Nonsafety-Related Components

Quality Assurance Program and Administrative Controls are discussed in Section B1.3.

3.1.2.3 Time-Limited Aging Analysis

The Time-Limited Aging Analyses identified below are associated with the Reactor Vessel, Internals, and Reactor Coolant System components. The section of Chapter 4 that contains the TLAA review results is indicated in parenthesis.

- Cumulative Fatigue Damage (Section 4.3, Metal Fatigue Analysis)
- Loss of Fracture Toughness due to Neutron Embrittlement (Section 4.2, Reactor Vessel Neutron Embrittlement Analysis)

3.1.3 Conclusions

The Reactor Vessel, Internals and Reactor Coolant System component types that are subject to AMR have been evaluated. The aging management programs selected to manage the aging effects for the Reactor Vessel, Internals, and Reactor Coolant System component types are identified in the summary Tables and in Section 3.1.2.1.

A description of these aging management programs is provided in Appendix B, along with a demonstration that the identified aging effects will be managed for the period of extended operation.

Therefore, based on the demonstration provided in Appendix B, the effects of aging associated with the Reactor Vessel, Internals and Reactor Coolant System component types will be adequately managed so that there is reasonable assurance that the intended functions will be maintained consistent with the current licensing basis during the period of extended operation.

Table 3.1.1 Summary of Aging Management Evaluations in Chapter IV of NUREG-1801 for Reactor Vessel, Internals, and Reactor Coolant System

Item Number	Component Type	Aging Effect / Mechanism	Aging Management Program	Further Evaluation Recommended	Discussion
3.1.1.01	Steel pressure vessel support skirt and attachment welds	Cumulative fatigue damage	TLAA, evaluated in accordance with 10 CFR 54.21(c)	Yes, TLAA	Not applicable. This is a Westinghouse vessel with no support skirt, so the applicable NUREG-1801 line was not used.
3.1.1.02					Not applicable - BWR only
3.1.1.03					Not applicable - BWR only
3.1.1.04					Not applicable - BWR only
3.1.1.05	Stainless steel and nickel alloy reactor vessel internals components	Cumulative fatigue damage	TLAA, evaluated in accordance with 10 CFR 54.21(c)	Yes, TLAA	Fatigue of metal components is a TLAA. See further evaluation in Section 3.1.2.2.1.
3.1.1.06	Nickel Alloy tubes and sleeves in a reactor coolant and secondary feedwater/steam environment	Cumulative fatigue damage	TLAA, evaluated in accordance with 10 CFR 54.21(c)	Yes, TLAA	Cumulative fatigue damage of steam generator tubes is not a TLAA as defined in 10 CFR 54.3. See further evaluation in Section 3.1.2.2.1.

Table 3.1.1 Summary of Aging Management Evaluations in Chapter IV of NUREG-1801 for Reactor Vessel, Internals, and Reactor Coolant System (Continued)

Item Number	Component Type	Aging Effect / Mechanism	Aging Management Program	Further Evaluation Recommended	Discussion
3.1.1.07	Steel and stainless steel reactor coolant pressure boundary closure bolting, head closure studs, support skirts and attachment welds, pressurizer relief tank components, steam generator components, piping and components external surfaces and bolting	Cumulative fatigue damage	TLAA, evaluated in accordance with 10 CFR 54.21(c)	Yes, TLAA	Fatigue of metal components is a TLAA. See further evaluation in Section 3.1.2.2.1.
3.1.1.08	Steel; stainless steel; and nickel-alloy reactor coolant pressure boundary piping, piping components, piping elements; flanges; nozzles and safe ends; pressurizer vessel shell heads and welds; heater sheaths and sleeves; penetrations; and thermal sleeves	Cumulative fatigue damage	TLAA, evaluated in accordance with 10 CFR 54.21(c) and environmental effects are to be addressed for Class 1 components	Yes, TLAA	Fatigue of metal components is a TLAA. See further evaluation in Section 3.1.2.2.1.

Table 3.1.1 Summary of Aging Management Evaluations in Chapter IV of NUREG-1801 for Reactor Vessel, Internals, and Reactor Coolant System (Continued)

Item Number	Component Type	Aging Effect / Mechanism	Aging Management Program	Further Evaluation Recommended	Discussion
3.1.1.09	Steel; stainless steel; steel with nickel-alloy or stainless steel cladding; nickel-alloy reactor vessel components: flanges; nozzles; penetrations; pressure housings; safe ends; thermal sleeves; vessel shells, heads and welds	Cumulative fatigue damage	TLAA, evaluated in accordance with 10 CFR 54.21(c) and environmental effects are to be addressed for Class 1 components	Yes, TLAA	Fatigue of metal components is a TLAA. See further evaluation in Section 3.1.2.2.1.
3.1.1.10	Steel; stainless steel; steel with nickel-alloy or stainless steel cladding; nickel-alloy steam generator components (flanges; penetrations; nozzles; safe ends, lower heads and welds)	Cumulative fatigue damage	TLAA, evaluated in accordance with 10 CFR 54.21(c) and environmental effects are to be addressed for Class 1 components	Yes, TLAA	Fatigue of metal components is a TLAA. See further evaluation in Section 3.1.2.2.1.
3.1.1.11					Not applicable - BWR only

Table 3.1.1 Summary of Aging Management Evaluations in Chapter IV of NUREG-1801 for Reactor Vessel, Internals, and Reactor Coolant System (Continued)

Item Number	Component Type	Aging Effect / Mechanism	Aging Management Program	Further Evaluation Recommended	Discussion
3.1.1.12	Steel steam generator shell assembly exposed to secondary feedwater and steam	Loss of material due to general, pitting and crevice corrosion	Water Chemistry (B2.1.2) and One-Time Inspection (B2.1.16)	Yes	Not applicable. DCPP has recirculating steam generators, not once-through steam generators, so the applicable NUREG-1801 line was not used. See further evaluation in Section 3.1.2.2.2.1.
3.1.1.13					Not applicable - BWR only
3.1.1.14					Not applicable - BWR only
3.1.1.15					Not applicable - BWR only
3.1.1.16	Steel steam generator upper and lower shell and transition cone exposed to secondary feedwater and steam	Loss of material due to general, pitting and crevice corrosion	Inservice Inspection (IWB, IWC, and IWD) (B2.1.1), and Water Chemistry (B2.1.2) and, for Westinghouse Model 44 and 51 S/G, if general and pitting corrosion of the shell is known to exist, additional inspection procedures are to be developed.	Yes	Consistent with NUREG-1801. See further evaluation in Section 3.1.2.2.2.4.

Table 3.1.1 Summary of Aging Management Evaluations in Chapter IV of NUREG-1801 for Reactor Vessel, Internals, and Reactor Coolant System (Continued)

Item Number	Component Type	Aging Effect / Mechanism	Aging Management Program	Further Evaluation Recommended	Discussion
3.1.1.17	Steel (with or without stainless steel cladding) reactor vessel beltline shell, nozzles, and welds	Loss of fracture toughness due to neutron irradiation embrittlement	TLAA, evaluated in accordance with Appendix G of 10 CFR Part 50 and RG 1.99. The applicant may choose to demonstrate that the materials of the nozzles are not controlling for the TLAA evaluations.	Yes, TLAA	Fracture toughness due to neutron irradiation embrittlement is a TLAA. See further evaluation in Section 3.1.2.2.3.1.
3.1.1.18	Steel (with or without stainless steel cladding) reactor vessel beltline shell, nozzles, and welds; safety injection nozzles	Loss of fracture toughness due to neutron irradiation embrittlement	Reactor Vessel Surveillance (B2.1.15)	Yes	Consistent with NUREG-1801. See further evaluation in Section 3.1.2.2.3.2.
3.1.1.19					Not applicable - BWR only
3.1.1.20					Not applicable - BWR only
3.1.1.21	Reactor vessel shell fabricated of SA508-Cl 2 forgings clad with stainless steel using a high-heat-input welding process	Crack growth due to cyclic loading	TLAA	Yes, TLAA	Crack growth due to cyclic loading of reactor vessel shell fabricated of SA508-Class 2 forgings clad with stainless steel using a high-heat input welding process is not a TLAA as defined in 10 CFR 54.3. See further evaluation in Section 3.1.2.2.5.

Table 3.1.1 Summary of Aging Management Evaluations in Chapter IV of NUREG-1801 for Reactor Vessel, Internals, and Reactor Coolant System (Continued)

Item Number	Component Type	Aging Effect / Mechanism	Aging Management Program	Further Evaluation Recommended	Discussion
3.1.1.22	Stainless steel and nickel alloy reactor vessel internals components exposed to reactor coolant and neutron flux	Loss of fracture toughness due to neutron irradiation embrittlement, void swelling	FSAR supplement commitment to (1) participate in industry RVI aging programs (2) implement applicable results (3) submit for NRC approval > 24 months before the extended period an RVI inspection plan based on industry recommendation.	No	Consistent with NUREG-1801. See further evaluation in Section 3.1.2.2.6.
3.1.1.23	Stainless steel reactor vessel closure head flange leak detection line and bottom-mounted instrument guide tubes	Cracking due to stress corrosion cracking	A plant-specific aging management program is to be evaluated.	Yes	Consistent with NUREG-1801. The plant-specific aging management program(s) used to manage the aging include: Water Chemistry (B2.1.2) and ASME Section XI Inservice Inspection, Subsections IWB, IWC, and IWD (B2.1.1) for High Pressure Conduits and Water Chemistry (B2.1.2) for Flux Thimble Tubes. The DCPP reactor vessel flange leak detection line is made of nickel alloy. See further evaluation in Section 3.1.2.2.7.1.

Table 3.1.1 Summary of Aging Management Evaluations in Chapter IV of NUREG-1801 for Reactor Vessel, Internals, and Reactor Coolant System (Continued)

Item Number	Component Type	Aging Effect / Mechanism	Aging Management Program	Further Evaluation Recommended	Discussion
3.1.1.24	Class 1 cast austenitic stainless steel piping, piping components, and piping elements exposed to reactor coolant	Cracking due to stress corrosion cracking	Water Chemistry (B2.1.2) and, for CASS components that do not meet the NUREG-0313 guidelines, a plant specific aging management program	Yes	Consistent with NUREG-1801 for material, environment, and aging effect, but different aging management programs, Water Chemistry (B2.1.2) and ASME Section XI Inservice Inspection, Subsections IWB, IWC, and IWD (B2.1.1) are credited. See further evaluation in Section 3.1.2.2.7.2.
3.1.1.25					Not applicable - BWR only
3.1.1.26					Not applicable - BWR only
3.1.1.27	Stainless steel and nickel alloy reactor vessel internals screws, bolts, tie rods, and hold-down springs	Loss of preload due to stress relaxation	FSAR supplement commitment to (1) participate in industry RVI aging programs (2) implement applicable results (3) submit for NRC approval > 24 months before the extended period an RVI inspection plan based on industry recommendation.	No	Consistent with NUREG-1801. See further evaluation in Section 3.1.2.2.9.

Table 3.1.1 Summary of Aging Management Evaluations in Chapter IV of NUREG-1801 for Reactor Vessel, Internals, and Reactor Coolant System (Continued)

Item Number	Component Type	Aging Effect / Mechanism	Aging Management Program	Further Evaluation Recommended	Discussion
3.1.1.28	Steel steam generator feedwater impingement plate and support exposed to secondary feedwater	Loss of material due to erosion	A plant-specific aging management program is to be evaluated.	Yes	Not applicable. DCPP steam generators do not have feedwater impingement plates, so the applicable NUREG-1801 line was not used. See further evaluation in Section 3.1.2.2.10.
3.1.1.29					Not applicable - BWR only

Table 3.1.1 Summary of Aging Management Evaluations in Chapter IV of NUREG-1801 for Reactor Vessel, Internals, and Reactor Coolant System (Continued)

Item Number	Component Type	Aging Effect / Mechanism	Aging Management Program	Further Evaluation Recommended	Discussion
3.1.1.30	Stainless steel reactor vessel internals components (e.g., Upper internals assembly, RCCA guide tube assemblies, Baffle/former assembly, Lower internal assembly, shroud assemblies, Plenum cover and plenum cylinder, Upper grid assembly, Control rod guide tube (CRGT) assembly, Core support shield assembly, Core barrel assembly, Lower grid assembly, Flow distributor assembly, Thermal shield, Instrumentation support structures)	Cracking due to stress corrosion cracking, irradiation-assisted stress corrosion cracking	Water Chemistry (B2.1.2) and FSAR supplement commitment to (1) participate in industry RVI aging programs (2) implement applicable results (3) submit for NRC approval > 24 months before the extended period an RVI inspection plan based on industry recommendation.	No	Consistent with NUREG-1801. See further evaluation in Section 3.1.2.2.12.

Table 3.1.1 Summary of Aging Management Evaluations in Chapter IV of NUREG-1801 for Reactor Vessel, Internals, and Reactor Coolant System (Continued)

Item Number	Component Type	Aging Effect / Mechanism	Aging Management Program	Further Evaluation Recommended	Discussion
3.1.1.31	Nickel alloy and steel with nickel-alloy cladding piping, piping component, piping elements, penetrations, nozzles, safe ends, and welds (other than reactor vessel head); pressurizer heater sheaths, sleeves, diaphragm plate, manways and flanges; core support pads/core guide lugs	Cracking due to primary water stress corrosion cracking	Inservice Inspection (IWB, IWC, and IWD) (B2.1.1) and Water Chemistry (B2.1.2) and for nickel alloy, comply with applicable NRC Orders and provide a commitment in the FSAR supplement to implement applicable (1) Bulletins and Generic Letters and (2) staff-accepted industry guidelines.	No	Consistent with NUREG-1801 for material, environment, and aging effect, but different aging management programs are credited: (I) For RVI components, BMI Nozzles and Core Support Lugs made of Alloy 600, Nickel Alloy Aging Management (B2.1.37), Inservice Inspection, (IWB, IWC, and IWD) (B2.1.1) for Class 1 components, Water Chemistry (B2.1.2) are credited. A commitment is made in the FSAR supplement to implement applicable (1) Bulletins and Generic Letters and (2) staff-accepted industry guidelines. (II) For pressurizer and steam generator components made of Alloy 690, Inservice Inspection, (IWB, IWC, and IWD) (B2.1.1) and Water Chemistry (B2.1.2) are credited. See Section 3.1.2.2.13.

Table 3.1.1 Summary of Aging Management Evaluations in Chapter IV of NUREG-1801 for Reactor Vessel, Internals, and Reactor Coolant System (Continued)

Item Number	Component Type	Aging Effect / Mechanism	Aging Management Program	Further Evaluation Recommended	Discussion
3.1.1.32	Steel steam generator feedwater inlet ring and supports	Wall thinning due to flow-accelerated corrosion	A plant-specific aging management program is to be evaluated.	Yes	Consistent with NUREG-1801. The plant-specific aging management program(s) used to manage the aging include: Steam Generator Tubing Integrity (B2.1.8) and Water Chemistry (B2.1.2) See further evaluation in Section 3.1.2.2.14.
3.1.1.33	Stainless steel and nickel alloy reactor vessel internals components	Changes in dimensions due to void swelling	FSAR supplement commitment to (1) participate in industry RVI aging programs (2) implement applicable results (3) submit for NRC approval > 24 months before the extended period an RVI inspection plan based on industry recommendation.	No	Consistent with NUREG-1801. See further evaluation in Section 3.1.2.2.15.

Table 3.1.1 Summary of Aging Management Evaluations in Chapter IV of NUREG-1801 for Reactor Vessel, Internals, and Reactor Coolant System (Continued)

Item Number	Component Type	Aging Effect / Mechanism	Aging Management Program	Further Evaluation Recommended	Discussion
3.1.1.34	Stainless steel and nickel alloy reactor control rod drive head penetration pressure housings	Cracking due to stress corrosion cracking and primary water stress corrosion cracking	Inservice Inspection (IWB, IWC, and IWD) (B2.1.1) and Water Chemistry (B2.1.2) and for nickel alloy, comply with applicable NRC Orders and provide a commitment in the FSAR supplement to implement applicable (1) Bulletins and Generic Letters and (2) staff-accepted industry guidelines.	No	Consistent with NUREG-1801. See further evaluation in Section 3.1.2.2.16.1.
3.1.1.35	Steel with stainless steel or nickel alloy cladding primary side components; steam generator upper and lower heads, tubesheets and tube-to-tube sheet welds	Cracking due to stress corrosion cracking and primary water stress corrosion cracking	Inservice Inspection (IWB, IWC, and IWD) (B2.1.1) and Water Chemistry (B2.1.2) and for nickel alloy, comply with applicable NRC Orders and provide a commitment in the FSAR supplement to implement applicable (1) Bulletins and Generic Letters and (2) staff-accepted industry guidelines.	No	Not applicable. DCPP has recirculating steam generators, not once-through steam generators, so the applicable NUREG-1801 line was not used. See further evaluation in Section 3.1.2.2.16.1

Table 3.1.1 Summary of Aging Management Evaluations in Chapter IV of NUREG-1801 for Reactor Vessel, Internals, and Reactor Coolant System (Continued)

Item Number	Component Type	Aging Effect / Mechanism	Aging Management Program	Further Evaluation Recommended	Discussion
3.1.1.36	Nickel alloy, stainless steel pressurizer spray head	Cracking due to stress corrosion cracking and primary water stress corrosion cracking	Water Chemistry (B2.1.2) and One-Time Inspection (B2.1.16) and, for nickel alloy welded spray heads, comply with applicable NRC Orders and provide a commitment in the FSAR supplement to implement applicable (1) Bulletins and Generic Letters and (2) staff-accepted industry guidelines.	No	Consistent with NUREG-1801. See further evaluation in Section 3.1.2.2.16.2.

Table 3.1.1 Summary of Aging Management Evaluations in Chapter IV of NUREG-1801 for Reactor Vessel, Internals, and Reactor Coolant System (Continued)

Item Number	Component Type	Aging Effect / Mechanism	Aging Management Program	Further Evaluation Recommended	Discussion
3.1.1.37	Stainless steel and nickel alloy reactor vessel internals components (e.g., Upper internals assembly, RCCA guide tube assemblies, Lower internal assembly, CEA shroud assemblies, Core shroud assembly, Core support shield assembly, Core barrel assembly, Lower grid assembly, Flow distributor assembly)	Cracking due to stress corrosion cracking, primary water stress corrosion cracking, irradiation-assisted stress corrosion cracking	Water Chemistry (B2.1.2) and FSAR supplement commitment to (1) participate in industry RVI aging programs (2) implement applicable results (3) submit for NRC approval > 24 months before the extended period an RVI inspection plan based on industry recommendation.	No	Consistent with NUREG-1801. See further evaluation in Section 3.1.2.2.17.
3.1.1.38					Not applicable - BWR only
3.1.1.39					Not applicable - BWR only
3.1.1.40					Not applicable - BWR only
3.1.1.41					Not applicable - BWR only
3.1.1.42					Not applicable - BWR only

Table 3.1.1 Summary of Aging Management Evaluations in Chapter IV of NUREG-1801 for Reactor Vessel, Internals, and Reactor Coolant System (Continued)

Item Number	Component Type	Aging Effect / Mechanism	Aging Management Program	Further Evaluation Recommended	Discussion
3.1.1.43					Not applicable - BWR only
3.1.1.44					Not applicable - BWR only
3.1.1.45					Not applicable - BWR only
3.1.1.46					Not applicable - BWR only
3.1.1.47					Not applicable - BWR only
3.1.1.48					Not applicable - BWR only
3.1.1.49					Not applicable - BWR only
3.1.1.50					Not applicable - BWR only
3.1.1.51					Not applicable - BWR only

Table 3.1.1 Summary of Aging Management Evaluations in Chapter IV of NUREG-1801 for Reactor Vessel, Internals, and Reactor Coolant System (Continued)

Item Number	Component Type	Aging Effect / Mechanism	Aging Management Program	Further Evaluation Recommended	Discussion
3.1.1.52	Steel and stainless steel reactor coolant pressure boundary (RCPB) pump and valve closure bolting, manway and holding bolting, flange bolting, and closure bolting in high-pressure and high-temperature systems	Cracking due to stress corrosion cracking, loss of material due to wear, loss of preload due to thermal effects, gasket creep, and self-loosening	Bolting Integrity (B2.1.7)	No	Consistent with NUREG-1801 with aging management program exceptions. The aging management program(s) with exceptions to NUREG-1801 include: Bolting Integrity (B2.1.7)
3.1.1.53	Steel piping, piping components, and piping elements exposed to closed cycle cooling water	Loss of material due to general, pitting and crevice corrosion	Closed-Cycle Cooling Water System (B2.1.10)	No	Consistent with NUREG-1801 with aging management program exceptions. The aging management program(s) with exceptions to NUREG-1801 include: Closed-Cycle Cooling Water System (B2.1.10)
3.1.1.54	Copper alloy piping, piping components, and piping elements exposed to closed cycle cooling water	Loss of material due to pitting, crevice, and galvanic corrosion	Closed-Cycle Cooling Water System (B2.1.10)	No	Not applicable. DCPP has no in-scope copper alloy piping, piping components or piping elements exposed to closed cycle cooling water in the reactor coolant system, so the applicable NUREG-1801 line was not used.

Table 3.1.1 Summary of Aging Management Evaluations in Chapter IV of NUREG-1801 for Reactor Vessel, Internals, and Reactor Coolant System (Continued)

Item Number	Component Type	Aging Effect / Mechanism	Aging Management Program	Further Evaluation Recommended	Discussion
3.1.1.55	Cast austenitic stainless steel Class 1 pump casings, and valve bodies and bonnets exposed to reactor coolant >250°C (>482°F)	Loss of fracture toughness due to thermal aging embrittlement	Inservice inspection (IWB, IWC, and IWD) (B2.1.1). Thermal aging susceptibility screening is not necessary, inservice inspection requirements are sufficient for managing these aging effects. ASME Code Case N-481 also provides an alternative for pump casings.	No	Consistent with NUREG-1801.
3.1.1.56	Copper alloy >15% Zn piping, piping components, and piping elements exposed to closed cycle cooling water	Loss of material due to selective leaching	Selective Leaching of Materials (B2.1.17)	No	Not applicable. DCPP has no in-scope copper alloy >15 percent Zn components exposed to closed-cycle cooling water in the reactor coolant system, so the applicable NUREG-1801 line was not used.

Table 3.1.1 Summary of Aging Management Evaluations in Chapter IV of NUREG-1801 for Reactor Vessel, Internals, and Reactor Coolant System (Continued)

Item Number	Component Type	Aging Effect / Mechanism	Aging Management Program	Further Evaluation Recommended	Discussion
3.1.1.57	Cast austenitic stainless steel Class 1 piping, piping component, and piping elements and control rod drive pressure housings exposed to reactor coolant >250°C (>482°F)	Loss of fracture toughness due to thermal aging embrittlement	Thermal Aging Embrittlement of CASS (B2.1.39)	No	Consistent with NUREG-1801.
3.1.1.58	Steel reactor coolant pressure boundary external surfaces exposed to air with borated water leakage	Loss of material due to Boric acid corrosion	Boric Acid Corrosion (B2.1.4)	No	Consistent with NUREG-1801.
3.1.1.59	Steel steam generator steam nozzle and safe end, feedwater nozzle and safe end, AFW nozzles and safe ends exposed to secondary feedwater/steam	Wall thinning due to flow-accelerated corrosion	Flow-Accelerated Corrosion (B2.1.6)	No	Consistent with NUREG-1801 with aging management program exceptions. The aging management program(s) with exceptions to NUREG-1801 include: Flow-Accelerated Corrosion (B2.1.6)
3.1.1.60	Stainless steel flux thimble tubes (with or without chrome plating)	Loss of material due to Wear	Flux Thimble Tube Inspection (B2.1.21)	No	Consistent with NUREG-1801.

Table 3.1.1 Summary of Aging Management Evaluations in Chapter IV of NUREG-1801 for Reactor Vessel, Internals, and Reactor Coolant System (Continued)

Item Number	Component Type	Aging Effect / Mechanism	Aging Management Program	Further Evaluation Recommended	Discussion
3.1.1.61	Stainless steel, steel pressurizer integral support exposed to air with metal temperature up to 288°C (550°F)	Cracking due to cyclic loading	Inservice Inspection (IWB, IWC, and IWD) (B2.1.1)	No	Consistent with NUREG-1801.
3.1.1.62	Stainless steel, steel with stainless steel cladding reactor coolant system cold leg, hot leg, surge line, and spray line piping and fittings exposed to reactor coolant	Cracking due to cyclic loading	Inservice Inspection (IWB, IWC, and IWD) (B2.1.1)	No	Consistent with NUREG-1801.
3.1.1.63	Steel reactor vessel flange, stainless steel and nickel alloy reactor vessel internals exposed to reactor coolant (e.g., upper and lower internals assembly, CEA shroud assembly, core support barrel, upper grid assembly, core support shield assembly, lower grid assembly)	Loss of material due to Wear	Inservice Inspection (IWB, IWC, and IWD) (B2.1.1)	No	Consistent with NUREG-1801.

Table 3.1.1 Summary of Aging Management Evaluations in Chapter IV of NUREG-1801 for Reactor Vessel, Internals, and Reactor Coolant System (Continued)

Item Number	Component Type	Aging Effect / Mechanism	Aging Management Program	Further Evaluation Recommended	Discussion
3.1.1.64	Stainless steel and steel with stainless steel or nickel alloy cladding pressurizer components	Cracking due to stress corrosion cracking, primary water stress corrosion cracking	Inservice Inspection (IWB, IWC, and IWD) (B2.1.1), and Water Chemistry (B2.1.2)	No	Consistent with NUREG-1801.
3.1.1.65	Nickel alloy reactor vessel upper head and control rod drive penetration nozzles, instrument tubes, head vent pipe (top head), and welds	Cracking due to primary water stress corrosion cracking	Inservice Inspection (IWB, IWC, and IWD) (B2.1.1) and Water Chemistry (B2.1.2) and Nickel-Alloy Penetration Nozzles Welded to the Upper Reactor Vessel Closure Heads of Pressurized Water Reactors (B2.1.5)	No	Consistent with NUREG-1801.
3.1.1.66	Steel steam generator secondary manways and handholds (cover only) exposed to air with leaking secondary-side water and/or steam	Loss of material due to erosion	Inservice Inspection (IWB, IWC, and IWD) for Class 2 components (B2.1.1)	No	Not applicable. DCPP has recirculating steam generators, not once-through steam generators, so the applicable NUREG-1801 line was not used.

Table 3.1.1 Summary of Aging Management Evaluations in Chapter IV of NUREG-1801 for Reactor Vessel, Internals, and Reactor Coolant System (Continued)

Item Number	Component Type	Aging Effect / Mechanism	Aging Management Program	Further Evaluation Recommended	Discussion
3.1.1.67	Steel with stainless steel or nickel alloy cladding; or stainless steel pressurizer components exposed to reactor coolant	Cracking due to cyclic loading	Inservice Inspection (IWB, IWC, and IWD) (B2.1.1), and Water Chemistry (B2.1.2)	No	Consistent with NUREG-1801.
3.1.1.68	Stainless steel, steel with stainless steel cladding Class 1 piping, fittings, pump casings, valve bodies, nozzles, safe ends, manways, flanges, CRD housing; pressurizer heater sheaths, sleeves, diaphragm plate; pressurizer relief tank components, reactor coolant system cold leg, hot leg, surge line, and spray line piping and fittings	Cracking due to stress corrosion cracking	Inservice Inspection (IWB, IWC, and IWD) (B2.1.1), and Water Chemistry (B2.1.2)	No	Consistent with NUREG-1801.

Table 3.1.1 Summary of Aging Management Evaluations in Chapter IV of NUREG-1801 for Reactor Vessel, Internals, and Reactor Coolant System (Continued)

Item Number	Component Type	Aging Effect / Mechanism	Aging Management Program	Further Evaluation Recommended	Discussion
3.1.1.69	Stainless steel, nickel alloy safety injection nozzles, safe ends, and associated welds and buttering exposed to reactor coolant	Cracking due to stress corrosion cracking, primary water stress corrosion cracking	Inservice Inspection (IWB, IWC, and IWD) (B2.1.1), and Water Chemistry (B2.1.2)	No	Consistent with NUREG-1801 aging management program for stainless steel components in reactor coolant. For nickel alloy components of reactor internals, different aging management programs, Nickel Alloy Aging Management (B2.1.37), ASME Section XI Inservice Inspection, Subsections IWB, IWC, and IWD (B2.1.1) for Class 1 components, Water Chemistry (B2.1.2), and Comply with applicable NRC Orders and provide a commitment in the FSAR supplement to implement applicable (1) Bulletins and Generic Letters and (2) staff-accepted industry guidelines.

Table 3.1.1 Summary of Aging Management Evaluations in Chapter IV of NUREG-1801 for Reactor Vessel, Internals, and Reactor Coolant System (Continued)

Item Number	Component Type	Aging Effect / Mechanism	Aging Management Program	Further Evaluation Recommended	Discussion
3.1.1.70	Stainless steel; steel with stainless steel cladding Class 1 piping, fittings and branch connections < NPS 4 exposed to reactor coolant	Cracking due to stress corrosion cracking, thermal and mechanical loading	Inservice Inspection (IWB, IWC, and IWD) (B2.1.1), Water chemistry (B2.1.2), and One-Time Inspection of ASME Code Class 1 Small-bore Piping (B2.1.19)	No	Consistent with NUREG-1801 with aging management program exceptions. The aging management program(s) with exceptions to NUREG-1801 include: One-Time Inspection of ASME Code Class 1 Small-Bore Piping (B2.1.19)
3.1.1.71	High-strength low alloy steel closure head stud assembly exposed to air with reactor coolant leakage	Cracking due to stress corrosion cracking; loss of material due to wear	Reactor Head Closure Studs(B2.1.3)	No	Consistent with NUREG-1801 with aging management program exceptions. The aging management program(s) with exceptions to NUREG-1801 include: Reactor Head Closure Studs (B2.1.3)
3.1.1.72	Nickel alloy steam generator tubes and sleeves exposed to secondary feedwater/ steam	Cracking due to OD stress corrosion cracking and intergranular attack, loss of material due to fretting and wear	Steam Generator Tube Integrity (B2.1.8) and Water Chemistry (B2.1.2)	No	Consistent with NUREG-1801.
3.1.1.73	Nickel alloy steam generator tubes, repair sleeves, and tube plugs exposed to reactor coolant	Cracking due to primary water stress corrosion cracking	Steam Generator Tube Integrity (B2.1.8) and Water Chemistry (B2.1.2)	No	Consistent with NUREG-1801.

Table 3.1.1 Summary of Aging Management Evaluations in Chapter IV of NUREG-1801 for Reactor Vessel, Internals, and Reactor Coolant System (Continued)

Item Number	Component Type	Aging Effect / Mechanism	Aging Management Program	Further Evaluation Recommended	Discussion
3.1.1.74	Chrome plated steel, stainless steel, nickel alloy steam generator anti-vibration bars exposed to secondary feedwater/ steam	Cracking due to stress corrosion cracking, loss of material due to crevice corrosion and fretting	Steam Generator Tube Integrity (B2.1.8) and Water Chemistry (B2.1.2)	No	Consistent with NUREG-1801.
3.1.1.75	Nickel alloy once-through steam generator tubes exposed to secondary feedwater/ steam	Denting due to corrosion of carbon steel tube support plate	Steam Generator Tube Integrity (B2.1.8) and Water Chemistry (B2.1.2)	No	Not applicable. DCPP has recirculating steam generators, not once-through steam generators, so the applicable NUREG-1801 line was not used.
3.1.1.76	Steel steam generator tube support plate, tube bundle wrapper exposed to secondary feedwater/steam	Loss of material due to erosion, general, pitting, and crevice corrosion, ligament cracking due to corrosion	Steam Generator Tube Integrity (B2.1.8) and Water Chemistry (B2.1.2)	No	Consistent with NUREG-1801.
3.1.1.77	Nickel alloy steam generator tubes and sleeves exposed to phosphate chemistry in secondary feedwater/ steam	Loss of material due to wastage and pitting corrosion	Steam Generator Tube Integrity (B2.1.8) and Water Chemistry (B2.1.2)	No	Not applicable. DCPP does not use phosphate chemistry, so the applicable NUREG-1801 line was not used.

Table 3.1.1 Summary of Aging Management Evaluations in Chapter IV of NUREG-1801 for Reactor Vessel, Internals, and Reactor Coolant System (Continued)

Item Number	Component Type	Aging Effect / Mechanism	Aging Management Program	Further Evaluation Recommended	Discussion
3.1.1.78	Steel steam generator tube support lattice bars exposed to secondary feedwater/ steam	Wall thinning due to flow-accelerated corrosion	Steam Generator Tube Integrity (B2.1.8) and Water Chemistry (B2.1.2)	No	Not applicable. DCPP steam generators do not contain lattice bars, so the applicable NUREG-1801 line was not used.
3.1.1.79	Nickel alloy steam generator tubes exposed to secondary feedwater/ steam	Denting due to corrosion of steel tube support plate	Steam Generator Tube Integrity (B2.1.8); Water Chemistry (B2.1.2) and, for plants that could experience denting at the upper support plates, evaluate potential for rapidly propagating cracks and then develop and take corrective actions consistent with Bulletin 88-02.	No	Not applicable. DCPP steam generators do not contain steel tube support plates and the aging effect is not applicable.

Table 3.1.1 Summary of Aging Management Evaluations in Chapter IV of NUREG-1801 for Reactor Vessel, Internals, and Reactor Coolant System (Continued)

Item Number	Component Type	Aging Effect / Mechanism	Aging Management Program	Further Evaluation Recommended	Discussion
3.1.1.80	Cast austenitic stainless steel reactor vessel internals (e.g., upper internals assembly, lower internal assembly, CEA shroud assemblies, control rod guide tube assembly, core support shield assembly, lower grid assembly)	Loss of fracture toughness due to thermal aging and neutron irradiation embrittlement	Thermal Aging and Neutron Irradiation Embrittlement of CASS (B2.1.39)	No	Consistent with NUREG-1801 for material, environment, and aging effect, but a different aging management program Water Chemistry (B2.1.2) and FSAR supplement commitment to (1) participate in industry RVI aging programs (2) implement applicable results (3) submit for NRC approval > 24 months before the extended period an RVI inspection plan based on industry recommendations is credited.
3.1.1.81	Nickel alloy or nickel-alloy clad steam generator divider plate exposed to reactor coolant	Cracking due to primary water stress corrosion cracking	Water Chemistry (B2.1.2)	No	Consistent with NUREG-1801.
3.1.1.82	Stainless steel steam generator primary side divider plate exposed to reactor coolant	Cracking due to stress corrosion cracking	Water Chemistry (B2.1.2)	No	Not applicable. DCPP steam generators primary side divider plates are made of nickel-alloy, so the applicable NUREG-1801 line was not used.

Table 3.1.1 Summary of Aging Management Evaluations in Chapter IV of NUREG-1801 for Reactor Vessel, Internals, and Reactor Coolant System (Continued)

Item Number	Component Type	Aging Effect / Mechanism	Aging Management Program	Further Evaluation Recommended	Discussion
3.1.1.83	Stainless steel; steel with nickel-alloy or stainless steel cladding; and nickel-alloy reactor vessel internals and reactor coolant pressure boundary components exposed to reactor coolant	Loss of material due to pitting and crevice corrosion	Water Chemistry (B2.1.2)	No	Consistent with NUREG-1801 aging management program for pressurizer, reactor vessel and reactor vessel internals. For components in reactor coolant piping system, different aging management programs, Water Chemistry (B2.1.2) and One-Time Inspection (B2.1.16) are credited.
3.1.1.84	Nickel alloy steam generator components such as, secondary side nozzles (vent, drain, and instrumentation) exposed to secondary feedwater/ steam	Cracking due to stress corrosion cracking	Water Chemistry (B2.1.2) and One-Time Inspection (B2.1.16) or Inservice Inspection (IWB, IWC, and IWD) (B2.1.1).	No	Not applicable. DCPP has recirculating steam generators, not once-through steam generators, so the applicable NUREG-1801 line was not used.

Table 3.1.1 Summary of Aging Management Evaluations in Chapter IV of NUREG-1801 for Reactor Vessel, Internals, and Reactor Coolant System (Continued)

Item Number	Component Type	Aging Effect / Mechanism	Aging Management Program	Further Evaluation Recommended	Discussion
3.1.1.85	Nickel alloy piping, piping components, and piping elements exposed to air – indoor uncontrolled (external)	None	None	NA	Not applicable. DCPP has no in-scope nickel alloy piping, piping components, and piping elements exposed to air – indoor uncontrolled (external) in the reactor coolant system, so the applicable NUREG-1801 line was not used. The external environment used for aging evaluation is air with borated water leakage instead.
3.1.1.86	Stainless steel piping, piping components, and piping elements exposed to air – indoor uncontrolled (External); air with borated water leakage; concrete; gas	None	None	NA	Consistent with NUREG-1801.
3.1.1.87	Steel piping, piping components, and piping elements in concrete	None	None	NA	Not applicable. The DCPP reactor vessel, internals, and reactor coolant systems have no in-scope steel piping, piping components or piping elements embedded in concrete, so the applicable NUREG-1801 line was not used.

Table 3.1.2-1 Reactor Vessel, Internals, and Reactor Coolant System – Summary of Aging Management Evaluation – Reactor Vessel and Internals

Component Type	Intended Function	Material	Environment	Aging Effect Requiring Management	Aging Management Program	NUREG-1801 Vol. 2 Item	Table 1 Item	Notes
RV Bottom Mounted Instrument Guide Tube (High Pressure Conduits, Seal Fittings)	PB	Stainless Steel	Borated Water Leakage (Ext)	None	None	IV.E-3	3.1.1.86	A
RV Bottom Mounted Instrument Guide Tube (Flux Thimble Tubes)	PB	Stainless Steel	Borated Water Leakage (Int)	None	None	IV.E-3	3.1.1.86	A
RV Bottom Mounted Instrument Guide Tube (Flux Thimble Tubes)	PB	Stainless Steel	Reactor Coolant (Ext)	Cracking	Water Chemistry (B2.1.2)	IV.A2-1	3.1.1.23	A
RV Bottom Mounted Instrument Guide Tube (Flux Thimble Tubes)	PB	Stainless Steel	Reactor Coolant (Ext)	Loss of material	Flux Thimble Tube Inspection (B2.1.21)	IV.B2-13	3.1.1.60	A

Table 3.1.2-1 Reactor Vessel, Internals, and Reactor Coolant System – Summary of Aging Management Evaluation – Reactor Vessel and Internals (Continued)

Component Type	Intended Function	Material	Environment	Aging Effect Requiring Management	Aging Management Program	NUREG-1801 Vol. 2 Item	Table 1 Item	Notes
RV Bottom Mounted Instrument Guide Tube (Flux Thimble Tubes)	PB	Stainless Steel	Reactor Coolant (Ext)	Loss of material	Water Chemistry (B2.1.2)	IV.B2-32	3.1.1.83	A
RV Bottom Mounted Instrument Guide Tube (High Pressure Conduits, Seal Fittings)	PB	Stainless Steel	Reactor Coolant (Int)	Cracking	ASME Section XI Inservice Inspection, Subsections IWB, IWC, and IWD for Class 1 components (B2.1.1) and Water Chemistry (B2.1.2)	IV.A2-1	3.1.1.23	E
RV Bottom Mounted Instrument Guide Tube (High Pressure Conduits, Seal Fittings)	PB	Stainless Steel	Reactor Coolant (Int)	Loss of material	Water Chemistry (B2.1.2)	IV.A2-14	3.1.1.83	A
RV Bottom Mounted Instrument Nozzle (BMI Nozzle and Welds)	PB	Nickel Alloys	Borated Water Leakage (Ext)	None	None	None	None	G, 2

Table 3.1.2-1 Reactor Vessel, Internals, and Reactor Coolant System – Summary of Aging Management Evaluation – Reactor Vessel and Internals (Continued)

Component Type	Intended Function	Material	Environment	Aging Effect Requiring Management	Aging Management Program	NUREG-1801 Vol. 2 Item	Table 1 Item	Notes
RV Bottom Mounted Instrument Nozzle (BMI Nozzle and Welds)	PB	Nickel Alloys	Reactor Coolant (Int)	Loss of material	Water Chemistry (B2.1.2)	IV.A2-14	3.1.1.83	A
RV Bottom Mounted Instrument Nozzle (BMI Nozzle and Welds)	PB	Nickel Alloys	Reactor Coolant (Int)	Cracking	Nickel-Alloy Aging Management (B2.1.37), ASME Section XI Inservice Inspection, Subsections IWB, IWC, and IWD (B2.1.1) for Class 1 components, Water Chemistry (B2.1.2), and Comply with applicable NRC Orders and provide a commitment in the FSAR supplement to implement applicable (1) Bulletins and Generic Letters and (2) staff-accepted industry guidelines.	IV.A2-19	3.1.1.31	E, 1
RV Bottom Mounted Instrument Nozzle (BMI Nozzle and Welds)	PB	Nickel Alloys	Reactor Coolant (Int)	Cumulative fatigue damage	Time-Limited Aging Analysis evaluated for the period of extended operation	IV.A2-21	3.1.1.09	A

Table 3.1.2-1 Reactor Vessel, Internals, and Reactor Coolant System – Summary of Aging Management Evaluation – Reactor Vessel and Internals (Continued)

Component Type	Intended Function	Material	Environment	Aging Effect Requiring Management	Aging Management Program	NUREG-1801 Vol. 2 Item	Table 1 Item	Notes
RV Closure Head (Closure Head Dome/ Flange)	PB	Carbon Steel with Stainless Steel Cladding	Borated Water Leakage (Ext)	Loss of material	Boric Acid Corrosion (B2.1.4)	IV.A2-13	3.1.1.58	A
RV Closure Head (Closure Head Dome/ Flange)	PB	Carbon Steel with Stainless Steel Cladding	Reactor Coolant (Int)	Cracking	ASME Section XI Inservice Inspection, Subsections IWB, IWC, and IWD for Class 1 components (B2.1.1) and Water Chemistry (B2.1.2)	IV.A2-15	3.1.1.69	C
RV Closure Head (Closure Head Dome/ Flange)	PB	Carbon Steel with Stainless Steel Cladding	Reactor Coolant (Int)	Cumulative fatigue damage	Time-Limited Aging Analysis evaluated for the period of extended operation	IV.A2-21	3.1.1.09	A
RV Closure Head (Closure Head Dome/ Flange)	PB	Carbon Steel with Stainless Steel Cladding	Reactor Coolant (Int)	Loss of material	ASME Section XI Inservice Inspection, Subsections IWB, IWC, and IWD (B2.1.1)	IV.A2-25	3.1.1.63	A
RV Closure Head Bolts (Stud, Nut, Washer)	PB	High Strength Low Alloy Steel (Bolting)	Borated Water Leakage (Ext)	Cracking	Reactor Head Closure Studs (B2.1.3)	IV.A2-2	3.1.1.71	B

Table 3.1.2-1 Reactor Vessel, Internals, and Reactor Coolant System – Summary of Aging Management Evaluation – Reactor Vessel and Internals (Continued)

Component Type	Intended Function	Material	Environment	Aging Effect Requiring Management	Aging Management Program	NUREG-1801 Vol. 2 Item	Table 1 Item	Notes
RV Closure Head Bolts (Stud, Nut, Washer)	PB	High Strength Low Alloy Steel (Bolting)	Borated Water Leakage (Ext)	Loss of material	Reactor Head Closure Studs (B2.1.3)	IV.A2-3	3.1.1.71	B
RV Closure Head Bolts (Stud, Nut, Washer)	PB	High Strength Low Alloy Steel (Bolting)	Borated Water Leakage (Ext)	Cumulative fatigue damage	Time-Limited Aging Analysis evaluated for the period of extended operation	IV.A2-4	3.1.1.07	A
RV Closure Head Bolts (Stud, Nut, Washer)	PB	High Strength Low Alloy Steel (Bolting)	Borated Water Leakage (Ext)	Loss of material	Boric Acid Corrosion (B2.1.4)	IV.A2-13	3.1.1.58	A
RV Control Rod Drive Head Penetration (CRDM Nozzle (Adaptor) and Welds)	PB	Nickel Alloys	Borated Water Leakage (Ext)	None	None	None	None	G, 2

Table 3.1.2-1 Reactor Vessel, Internals, and Reactor Coolant System – Summary of Aging Management Evaluation – Reactor Vessel and Internals (Continued)

Component Type	Intended Function	Material	Environment	Aging Effect Requiring Management	Aging Management Program	NUREG-1801 Vol. 2 Item	Table 1 Item	Notes
RV Control Rod Drive Head Penetration (CRDM Nozzle (Adaptor) and Welds)	PB	Nickel Alloys	Reactor Coolant (Int)	Cracking	ASME Section XI Inservice Inspection, Subsections IWB, IWC, and IWD (B2.1.1), Water Chemistry (B2.1.2), and Nickel-Alloy Penetration Nozzles Welded to the Upper Reactor Vessel Closure Heads of Pressurized Water Reactors (B2.1.5)	IV.A2-9	3.1.1.65	A
RV Control Rod Drive Head Penetration (CRDM Nozzle (Adaptor) and Welds)	PB	Nickel Alloys	Reactor Coolant (Int)	Loss of material	Water Chemistry (B2.1.2)	IV.A2-14	3.1.1.83	A
RV Control Rod Drive Head Penetration (CRDM Nozzle (Adaptor) and Welds)	PB	Nickel Alloys	Reactor Coolant (Int)	Cumulative fatigue damage	Time-Limited Aging Analysis evaluated for the period of extended operation	IV.A2-21	3.1.1.09	A

Table 3.1.2-1 Reactor Vessel, Internals, and Reactor Coolant System – Summary of Aging Management Evaluation – Reactor Vessel and Internals (Continued)

Component Type	Intended Function	Material	Environment	Aging Effect Requiring Management	Aging Management Program	NUREG-1801 Vol. 2 Item	Table 1 Item	Notes
RV Control Rod Drive Head Penetration (CRDM Housing Flange, and Spare Adaptor Cap)	PB	Stainless Steel	Borated Water Leakage (Ext)	None	None	IV.E-3	3.1.1.86	C
RV Control Rod Drive Head Penetration (CRDM Housing Flange, and Spare Adaptor Cap)	PB	Stainless Steel	Reactor Coolant (Int)	Cracking	Water Chemistry (B2.1.2) and ASME Section XI Inservice Inspection, Subsections IWB, IWC, and IWD (B2.1.1)	IV.A2-11	3.1.1.34	A
RV Control Rod Drive Head Penetration (CRDM Housing Flange, and Spare Adaptor Cap)	PB	Stainless Steel	Reactor Coolant (Int)	Loss of material	Water Chemistry (B2.1.2)	IV.A2-14	3.1.1.83	A
RV Control Rod Drive Head Penetration (CRDM Housing Flange, and Spare Adaptor Cap)	PB	Stainless Steel	Reactor Coolant (Int)	Cumulative fatigue damage	Time-Limited Aging Analysis evaluated for the period of extended operation	IV.A2-21	3.1.1.09	A

Table 3.1.2-1 Reactor Vessel, Internals, and Reactor Coolant System – Summary of Aging Management Evaluation – Reactor Vessel and Internals (Continued)

Component Type	Intended Function	Material	Environment	Aging Effect Requiring Management	Aging Management Program	NUREG-1801 Vol. 2 Item	Table 1 Item	Notes
RV Core Support Lugs (Core Support Lugs and Weld)	SS	Nickel Alloys	Reactor Coolant (Ext)	Cracking	Nickel-Alloy Aging Management (B2.1.37), ASME Section XI Inservice Inspection, Subsections IWB, IWC, and IWD (B2.1.1) for Class 1 components, Water Chemistry (B2.1.2), and Comply with applicable NRC Orders and provide a commitment in the FSAR supplement to implement applicable (1) Bulletins and Generic Letters and (2) staff-accepted industry guidelines.	IV.A2-12	3.1.1.31	E, 1
RV Core Support Lugs (Core Support Lugs and Weld)	SS	Nickel Alloys	Reactor Coolant (Ext)	Loss of material	Water Chemistry (B2.1.2)	IV.A2-14	3.1.1.83	A
RV CRDM Housing (CRDM Latch Housing and Rod Travel Housing)	PB	Stainless Steel	Borated Water Leakage (Ext)	None	None	IV.E-3	3.1.1.86	A
RV CRDM Housing (CRDM Latch Housing and Rod Travel Housing)	PB	Stainless Steel	Reactor Coolant (Int)	Cracking	Water Chemistry (B2.1.2) and ASME Section XI Inservice Inspection, Subsections IWB, IWC, and IWD (B2.1.1)	IV.A2-11	3.1.1.34	A

Table 3.1.2-1 Reactor Vessel, Internals, and Reactor Coolant System – Summary of Aging Management Evaluation – Reactor Vessel and Internals (Continued)

Component Type	Intended Function	Material	Environment	Aging Effect Requiring Management	Aging Management Program	NUREG-1801 Vol. 2 Item	Table 1 Item	Notes
RV CRDM Housing (CRDM Latch Housing and Rod Travel Housing)	PB	Stainless Steel	Reactor Coolant (Int)	Loss of material	Water Chemistry (B2.1.2)	IV.A2-14	3.1.1.83	A
RV CRDM Housing (CRDM Latch Housing and Rod Travel Housing)	PB	Stainless Steel	Reactor Coolant (Int)	Cumulative fatigue damage	Time-Limited Aging Analysis evaluated for the period of extended operation	IV.A2-21	3.1.1.09	A
RV Flange Leak Monitoring Tube (O-Ring Leak Monitoring Tube)	PB	Nickel Alloys	Borated Water Leakage (Ext)	None	None	None	None	G, 2
RV Flange Leak Monitoring Tube (O-Ring Leak Monitoring Tube)	PB	Nickel Alloys	Borated Water Leakage (Int)	None	None	None	None	G, 2
RV Head Vent Nozzle (Head Vent Nozzle, Elbow, Horizontal Piece and Welds)	PB	Nickel Alloys	Borated Water Leakage (Ext)	None	None	None	None	G, 2
RV Head Vent Nozzle (Head Vent Nozzle, Elbow, Horizontal Piece and Welds)	PB	Nickel Alloys	Reactor Coolant (Int)	Loss of material	Water Chemistry (B2.1.2)	IV.A2-14	3.1.1.83	A

Table 3.1.2-1 Reactor Vessel, Internals, and Reactor Coolant System – Summary of Aging Management Evaluation – Reactor Vessel and Internals (Continued)

Component Type	Intended Function	Material	Environment	Aging Effect Requiring Management	Aging Management Program	NUREG-1801 Vol. 2 Item	Table 1 Item	Notes
RV Head Vent Nozzle (Head Vent Nozzle, Elbow, Horizontal Piece and Welds)	PB	Nickel Alloys	Reactor Coolant (Int)	Cracking	ASME Section XI Inservice Inspection, Subsections IWB, IWC, and IWD (B2.1.1), Water Chemistry (B2.1.2), and Nickel-Alloy Penetration Nozzles Welded to the Upper Reactor Vessel Closure Heads of Pressurized Water Reactors (B2.1.5)	IV.A2-18	3.1.1.65	A
RV Head Vent Nozzle (Head Vent Nozzle, Elbow, Horizontal Piece and Welds)	PB	Nickel Alloys	Reactor Coolant (Int)	Cumulative fatigue damage	Time-Limited Aging Analysis evaluated for the period of extended operation	IV.A2-21	3.1.1.09	A
RV Ligaments (Vessel Ligaments Between Stud Holes)	SS	Stainless Steel	Borated Water Leakage (Ext)	None	None	IV.E-3	3.1.1.86	C
RV Nozzle Safe Ends and Welds (Inlet/Outlet Nozzle Safe End Welds)	PB	Nickel Alloys	Borated Water Leakage (Ext)	None	None	None	None	G, 2
RV Nozzle Safe Ends and Welds (Inlet/Outlet Nozzle Safe End Welds)	PB	Nickel Alloys	Reactor Coolant (Int)	Loss of material	Water Chemistry (B2.1.2)	IV.A2-14	3.1.1.83	A

Table 3.1.2-1 Reactor Vessel, Internals, and Reactor Coolant System – Summary of Aging Management Evaluation – Reactor Vessel and Internals (Continued)

Component Type	Intended Function	Material	Environment	Aging Effect Requiring Management	Aging Management Program	NUREG-1801 Vol. 2 Item	Table 1 Item	Notes
RV Nozzle Safe Ends and Welds (Inlet/Outlet Nozzle Safe End Welds)	PB	Nickel Alloys	Reactor Coolant (Int)	Cracking	Nickel-Alloy Aging Management (B2.1.37), ASME Section XI Inservice Inspection, Subsections IWB, IWC, and IWD (B2.1.1) for Class 1 components, Water Chemistry (B2.1.2), and Comply with applicable NRC Orders and provide a commitment in the FSAR supplement to implement applicable (1) Bulletins and Generic Letters and (2) staff-accepted industry guidelines.	IV.A2-15	3.1.1.69	E, 1
RV Nozzle Safe Ends and Welds (Inlet/Outlet Nozzle Safe End Welds)	PB	Nickel Alloys	Reactor Coolant (Int)	Cumulative fatigue damage	Time-Limited Aging Analysis evaluated for the period of extended operation	IV.A2-21	3.1.1.09	A
RV Nozzle Safe Ends and Welds (Inlet/Outlet Nozzle Safe Ends)	PB	Stainless Steel	Borated Water Leakage (Ext)	None	None	IV.E-3	3.1.1.86	A
RV Nozzle Safe Ends and Welds (Inlet/Outlet Nozzle Safe Ends)	PB	Stainless Steel	Reactor Coolant (Int)	Loss of material	Water Chemistry (B2.1.2)	IV.A2-14	3.1.1.83	A

Table 3.1.2-1 Reactor Vessel, Internals, and Reactor Coolant System – Summary of Aging Management Evaluation – Reactor Vessel and Internals (Continued)

Component Type	Intended Function	Material	Environment	Aging Effect Requiring Management	Aging Management Program	NUREG-1801 Vol. 2 Item	Table 1 Item	Notes
RV Nozzle Safe Ends and Welds (Inlet/Outlet Nozzle Safe Ends)	PB	Stainless Steel	Reactor Coolant (Int)	Cracking	ASME Section XI Inservice Inspection, Subsections IWB, IWC, and IWD for Class 1 components (B2.1.1) and Water Chemistry (B2.1.2)	IV.A2-15	3.1.1.69	A
RV Nozzle Safe Ends and Welds (Inlet/Outlet Nozzle Safe Ends)	PB	Stainless Steel	Reactor Coolant (Int)	Cumulative fatigue damage	Time-Limited Aging Analysis evaluated for the period of extended operation	IV.A2-21	3.1.1.09	A
RV Nozzle Support Pads (Vessel Support Pads)	SS	Carbon Steel	Borated Water Leakage (Ext)	Loss of material	Boric Acid Corrosion (B2.1.4)	IV.A2-13	3.1.1.58	A
RV Nozzles (Inlet/Outlet Nozzles)	PB	Carbon Steel with Stainless Steel Cladding	Borated Water Leakage (Ext)	Loss of material	Boric Acid Corrosion (B2.1.4)	IV.A2-13	3.1.1.58	A
RV Nozzles (Inlet/Outlet Nozzles)	PB	Carbon Steel with Stainless Steel Cladding	Reactor Coolant (Int)	Loss of material	Water Chemistry (B2.1.2)	IV.A2-14	3.1.1.83	A

Table 3.1.2-1 Reactor Vessel, Internals, and Reactor Coolant System – Summary of Aging Management Evaluation – Reactor Vessel and Internals (Continued)

Component Type	Intended Function	Material	Environment	Aging Effect Requiring Management	Aging Management Program	NUREG-1801 Vol. 2 Item	Table 1 Item	Notes
RV Nozzles (Inlet/Outlet Nozzles)	PB	Carbon Steel with Stainless Steel Cladding	Reactor Coolant (Int)	Cracking	ASME Section XI Inservice Inspection, Subsections IWB, IWC, and IWD for Class 1 components (B2.1.1) and Water Chemistry (B2.1.2)	IV.A2-15	3.1.1.69	A
RV Nozzles (Inlet/Outlet Nozzles)	PB	Carbon Steel with Stainless Steel Cladding	Reactor Coolant (Int)	Loss of fracture toughness	Time-Limited Aging Analysis evaluated for the period of extended operation	IV.A2-16	3.1.1.17	A
RV Nozzles (Inlet/Outlet Nozzles)	PB	Carbon Steel with Stainless Steel Cladding	Reactor Coolant (Int)	Loss of fracture toughness	Reactor Vessel Surveillance (B2.1.15)	IV.A2-17	3.1.1.18	A
RV Nozzles (Inlet/Outlet Nozzles)	PB	Carbon Steel with Stainless Steel Cladding	Reactor Coolant (Int)	Cumulative fatigue damage	Time-Limited Aging Analysis evaluated for the period of extended operation	IV.A2-21	3.1.1.09	A
RV Shell (RV Flange, RV Upper, Intermediate, and Lower Shell)	PB	Carbon Steel with Stainless Steel Cladding	Borated Water Leakage (Ext)	Loss of material	Boric Acid Corrosion (B2.1.4)	IV.A2-13	3.1.1.58	A

Table 3.1.2-1 Reactor Vessel, Internals, and Reactor Coolant System – Summary of Aging Management Evaluation – Reactor Vessel and Internals (Continued)

Component Type	Intended Function	Material	Environment	Aging Effect Requiring Management	Aging Management Program	NUREG-1801 Vol. 2 Item	Table 1 Item	Notes
RV Shell (RV Flange, RV Upper, Intermediate, and Lower Shell)	PB	Carbon Steel with Stainless Steel Cladding	Reactor Coolant (Int)	Loss of material	Water Chemistry (B2.1.2)	IV.A2-14	3.1.1.83	A
RV Shell (RV Flange, RV Upper, Intermediate, and Lower Shell)	PB	Carbon Steel with Stainless Steel Cladding	Reactor Coolant (Int)	Cracking	ASME Section XI Inservice Inspection, Subsections IWB, IWC, and IWD for Class 1 components (B2.1.1) and Water Chemistry (B2.1.2)	IV.A2-15	3.1.1.69	A
RV Shell (RV Flange, RV Upper, Intermediate, and Lower Shell)	PB	Carbon Steel with Stainless Steel Cladding	Reactor Coolant (Int)	Cumulative fatigue damage	Time-Limited Aging Analysis evaluated for the period of extended operation	IV.A2-21	3.1.1.09	A
RV Shell (RV Flange, RV Upper, Intermediate, and Lower Shell)	PB	Carbon Steel with Stainless Steel Cladding	Reactor Coolant (Int)	Loss of fracture toughness	Time-Limited Aging Analysis evaluated for the period of extended operation	IV.A2-23	3.1.1.17	A
RV Shell (RV Flange, RV Upper, Intermediate, and Lower Shell)	PB	Carbon Steel with Stainless Steel Cladding	Reactor Coolant (Int)	Loss of fracture toughness	Reactor Vessel Surveillance (B2.1.15)	IV.A2-24	3.1.1.18	A

Table 3.1.2-1 Reactor Vessel, Internals, and Reactor Coolant System – Summary of Aging Management Evaluation – Reactor Vessel and Internals (Continued)

Component Type	Intended Function	Material	Environment	Aging Effect Requiring Management	Aging Management Program	NUREG-1801 Vol. 2 Item	Table 1 Item	Notes
RV Shell (RV Flange, RV Upper, Intermediate, and Lower Shell)	PB	Carbon Steel with Stainless Steel Cladding	Reactor Coolant (Int)	Loss of material	ASME Section XI Inservice Inspection, Subsections IWB, IWC, and IWD (B2.1.1)	IV.A2-25	3.1.1.63	A
RV Shell Bottom Head (RV Bottom Head)	PB	Carbon Steel with Stainless Steel Cladding	Borated Water Leakage (Ext)	Loss of material	Boric Acid Corrosion (B2.1.4)	IV.A2-13	3.1.1.58	A
RV Shell Bottom Head (RV Bottom Head)	PB	Carbon Steel with Stainless Steel Cladding	Reactor Coolant (Int)	Loss of material	Water Chemistry (B2.1.2)	IV.A2-14	3.1.1.83	A
RV Shell Bottom Head (RV Bottom Head)	PB	Carbon Steel with Stainless Steel Cladding	Reactor Coolant (Int)	Cracking	ASME Section XI Inservice Inspection, Subsections IWB, IWC, and IWD for Class 1 components (B2.1.1) and Water Chemistry (B2.1.2)	IV.A2-15	3.1.1.69	A
RV Shell Bottom Head (RV Bottom Head)	PB	Carbon Steel with Stainless Steel Cladding	Reactor Coolant (Int)	Cumulative fatigue damage	Time-Limited Aging Analysis evaluated for the period of extended operation	IV.A2-21	3.1.1.09	A

Table 3.1.2-1 Reactor Vessel, Internals, and Reactor Coolant System – Summary of Aging Management Evaluation – Reactor Vessel and Internals (Continued)

Component Type	Intended Function	Material	Environment	Aging Effect Requiring Management	Aging Management Program	NUREG-1801 Vol. 2 Item	Table 1 Item	Notes
RV Shell Bottom Head (RV Bottom Head)	PB	Carbon Steel with Stainless Steel Cladding	Reactor Coolant (Int)	Loss of fracture toughness	Reactor Vessel Surveillance (B2.1.15)	IV.A2-24	3.1.1.18	A
RVI Baffle & Former Assembly (Baffle Plates, Former Plates)	DF, SLD, SS	Stainless Steel	Reactor Coolant (Ext)	Changes in dimensions	FSAR supplement commitment to (1) participate in industry RVI aging programs (2) implement applicable results (3) submit for NRC approval > 24 months before the extended period an RVI inspection plan based on industry recommendation.	IV.B2-1	3.1.1.33	A
RVI Baffle & Former Assembly (Baffle Plates, Former Plates)	DF, SLD, SS	Stainless Steel	Reactor Coolant (Ext)	Cracking	Water Chemistry (B2.1.2) and FSAR supplement commitment to (1) participate in industry RVI aging programs (2) implement applicable results (3) submit for NRC approval > 24 months before the extended period an RVI inspection plan based on industry recommendation	IV.B2-2	3.1.1.30	A

Table 3.1.2-1 Reactor Vessel, Internals, and Reactor Coolant System – Summary of Aging Management Evaluation – Reactor Vessel and Internals (Continued)

Component Type	Intended Function	Material	Environment	Aging Effect Requiring Management	Aging Management Program	NUREG-1801 Vol. 2 Item	Table 1 Item	Notes
RVI Baffle & Former Assembly (Baffle Plates, Former Plates)	DF, SLD, SS	Stainless Steel	Reactor Coolant (Ext)	Loss of fracture toughness	FSAR supplement commitment to (1) participate in industry RVI aging programs (2) implement applicable results (3) submit for NRC approval > 24 months before the extended period an RVI inspection plan based on industry recommendation.	IV.B2-3	3.1.1.22	A
RVI Baffle & Former Assembly (Baffle/ Former Bolts)	SS	Stainless Steel	Reactor Coolant (Ext)	Changes in dimensions	FSAR supplement commitment to (1) participate in industry RVI aging programs (2) implement applicable results (3) submit for NRC approval > 24 months before the extended period an RVI inspection plan based on industry recommendation.	IV.B2-4	3.1.1.33	A
RVI Baffle & Former Assembly (Baffle/ Former Bolts)	SS	Stainless Steel	Reactor Coolant (Ext)	Loss of preload	FSAR supplement commitment to (1) participate in industry RVI aging programs (2) implement applicable results (3) submit for NRC approval > 24 months before the extended period an RVI inspection plan based on industry recommendation.	IV.B2-5	3.1.1.27	A

Table 3.1.2-1 Reactor Vessel, Internals, and Reactor Coolant System – Summary of Aging Management Evaluation – Reactor Vessel and Internals (Continued)

Component Type	Intended Function	Material	Environment	Aging Effect Requiring Management	Aging Management Program	NUREG-1801 Vol. 2 Item	Table 1 Item	Notes
RVI Baffle & Former Assembly (Baffle/ Former Bolts)	SS	Stainless Steel	Reactor Coolant (Ext)	Loss of fracture toughness	FSAR supplement commitment to (1) participate in industry RVI aging programs (2) implement applicable results (3) submit for NRC approval > 24 months before the extended period an RVI inspection plan based on industry recommendation.	IV.B2-6	3.1.1.22	A
RVI Baffle & Former Assembly (Baffle/ Former Bolts)	SS	Stainless Steel	Reactor Coolant (Ext)	Cracking	Water Chemistry (B2.1.2) and FSAR supplement commitment to (1) participate in industry RVI aging programs (2) implement applicable results (3) submit for NRC approval > 24 months before the extended period an RVI inspection plan based on industry recommendation	IV.B2-10	3.1.1.30	A
RVI Baffle & Former Assembly (Baffle Plates, Former Plates and Baffle/Former Bolts)	DF, SLD, SS	Stainless Steel	Reactor Coolant (Ext)	Loss of material	Water Chemistry (B2.1.2)	IV.B2-32	3.1.1.83	A

Table 3.1.2-1 Reactor Vessel, Internals, and Reactor Coolant System – Summary of Aging Management Evaluation – Reactor Vessel and Internals (Continued)

Component Type	Intended Function	Material	Environment	Aging Effect Requiring Management	Aging Management Program	NUREG-1801 Vol. 2 Item	Table 1 Item	Notes
RVI Control Rod Guide Tube Assembly (Control Rod Guide Tubes/Tube Support Pins/Guide Tube Bolts)	SS	Stainless Steel	Reactor Coolant (Ext)	Changes in dimensions	FSAR supplement commitment to (1) participate in industry RVI aging programs (2) implement applicable results (3) submit for NRC approval > 24 months before the extended period an RVI inspection plan based on industry recommendation.	IV.B2-27	3.1.1.33	A
RVI Control Rod Guide Tube Assembly (Control Rod Guide Tubes/Tube Support Pins/Guide Tube Bolts)	SS	Stainless Steel	Reactor Coolant (Ext)	Cracking	Water Chemistry (B2.1.2) and FSAR supplement commitment to (1) participate in industry RVI aging programs (2) implement applicable results (3) submit for NRC approval > 24 months before the extended period an RVI inspection plan based on industry recommendation	IV.B2-28	3.1.1.37	A
RVI Control Rod Guide Tube Assembly (Control Rod Guide Tubes/Tube Support Pins/Guide Tube Bolts)	SS	Stainless Steel	Reactor Coolant (Ext)	Changes in dimensions	FSAR supplement commitment to (1) participate in industry RVI aging programs (2) implement applicable results (3) submit for NRC approval > 24 months before the extended period an RVI inspection plan based on industry recommendation.	IV.B2-29	3.1.1.33	A

Table 3.1.2-1 Reactor Vessel, Internals, and Reactor Coolant System – Summary of Aging Management Evaluation – Reactor Vessel and Internals (Continued)

Component Type	Intended Function	Material	Environment	Aging Effect Requiring Management	Aging Management Program	NUREG-1801 Vol. 2 Item	Table 1 Item	Notes
RVI Control Rod Guide Tube Assembly (Control Rod Guide Tubes/Tube Support Pins/Guide Tube Bolts)	SS	Stainless Steel	Reactor Coolant (Ext)	Cracking	Water Chemistry (B2.1.2) and FSAR supplement commitment to (1) participate in industry RVI aging programs (2) implement applicable results (3) submit for NRC approval > 24 months before the extended period an RVI inspection plan based on industry recommendation	IV.B2-30	3.1.1.30	A
RVI Control Rod Guide Tube Assembly (Control Rod Guide Tubes/Tube Support Pins/Guide Tube Bolts)	SS	Stainless Steel	Reactor Coolant (Ext)	Loss of material	Water Chemistry (B2.1.2)	IV.B2-32	3.1.1.83	A
RVI Core Barrel Assembly (RVI Core Barrel, Core Barrel Outlet Nozzles, and Core Barrel Flange)	DF, SLD, SS	Stainless Steel	Reactor Coolant (Ext)	Changes in dimensions	FSAR supplement commitment to (1) participate in industry RVI aging programs (2) implement applicable results (3) submit for NRC approval > 24 months before the extended period an RVI inspection plan based on industry recommendation.	IV.B2-7	3.1.1.33	A

Table 3.1.2-1 Reactor Vessel, Internals, and Reactor Coolant System – Summary of Aging Management Evaluation – Reactor Vessel and Internals (Continued)

Component Type	Intended Function	Material	Environment	Aging Effect Requiring Management	Aging Management Program	NUREG-1801 Vol. 2 Item	Table 1 Item	Notes
RVI Core Barrel Assembly (RVI Core Barrel, Core Barrel Outlet Nozzles, and Core Barrel Flange)	DF, SLD, SS	Stainless Steel	Reactor Coolant (Ext)	Cracking	Water Chemistry (B2.1.2) and FSAR supplement commitment to (1) participate in industry RVI aging programs (2) implement applicable results (3) submit for NRC approval > 24 months before the extended period an RVI inspection plan based on industry recommendation	IV.B2-8	3.1.1.30	A
RVI Core Barrel Assembly (RVI Core Barrel, Core Barrel Outlet Nozzles, and Core Barrel Flange)	DF, SLD, SS	Stainless Steel	Reactor Coolant (Ext)	Loss of fracture toughness	FSAR supplement commitment to (1) participate in industry RVI aging programs (2) implement applicable results (3) submit for NRC approval > 24 months before the extended period an RVI inspection plan based on industry recommendation.	IV.B2-9	3.1.1.22	A
RVI Core Barrel Assembly (RVI Core Barrel, Core Barrel Outlet Nozzles, and Core Barrel Flange)	DF, SLD, SS	Stainless Steel	Reactor Coolant (Ext)	Loss of material	Water Chemistry (B2.1.2)	IV.B2-32	3.1.1.83	A

Table 3.1.2-1 Reactor Vessel, Internals, and Reactor Coolant System – Summary of Aging Management Evaluation – Reactor Vessel and Internals (Continued)

Component Type	Intended Function	Material	Environment	Aging Effect Requiring Management	Aging Management Program	NUREG-1801 Vol. 2 Item	Table 1 Item	Notes
RVI Hold Down Spring (RVI Hold Down Spring)	SS	Stainless Steel	Reactor Coolant (Ext)	Loss of material	Water Chemistry (B2.1.2)	IV.B2-32	3.1.1.83	A
RVI Hold Down Spring (RVI Hold Down Spring)	SS	Stainless Steel	Reactor Coolant (Ext)	Loss of preload	FSAR supplement commitment to (1) participate in industry RVI aging programs (2) implement applicable results (3) submit for NRC approval > 24 months before the extended period an RVI inspection plan based on industry recommendation.	IV.B2-33	3.1.1.27	A
RVI Hold Down Spring (RVI Hold Down Spring)	SS	Stainless Steel	Reactor Coolant (Ext)	Changes in dimensions	FSAR supplement commitment to (1) participate in industry RVI aging programs (2) implement applicable results (3) submit for NRC approval > 24 months before the extended period an RVI inspection plan based on industry recommendation.	IV.B2-41	3.1.1.33	A

Table 3.1.2-1 Reactor Vessel, Internals, and Reactor Coolant System – Summary of Aging Management Evaluation – Reactor Vessel and Internals (Continued)

Component Type	Intended Function	Material	Environment	Aging Effect Requiring Management	Aging Management Program	NUREG-1801 Vol. 2 Item	Table 1 Item	Notes
RVI Hold Down Spring (RVI Hold Down Spring)	SS	Stainless Steel	Reactor Coolant (Ext)	Cracking	Water Chemistry (B2.1.2) and FSAR supplement commitment to (1) participate in industry RVI aging programs (2) implement applicable results (3) submit for NRC approval > 24 months before the extended period an RVI inspection plan based on industry recommendation	IV.B2-42	3.1.1.30	A
RVI Instrumentation Support Structures (Flux Thimble Guide Columns and Bolts, Thermocouple Instrumentation Columns/ Conduit/Bolts)	SS	Stainless Steel	Reactor Coolant (Ext)	Changes in dimensions	FSAR supplement commitment to (1) participate in industry RVI aging programs (2) implement applicable results (3) submit for NRC approval > 24 months before the extended period an RVI inspection plan based on industry recommendation.	IV.B2-11	3.1.1.33	A

Table 3.1.2-1 Reactor Vessel, Internals, and Reactor Coolant System – Summary of Aging Management Evaluation – Reactor Vessel and Internals (Continued)

Component Type	Intended Function	Material	Environment	Aging Effect Requiring Management	Aging Management Program	NUREG-1801 Vol. 2 Item	Table 1 Item	Notes
RVI Instrumentation Support Structures (Flux Thimble Guide Columns and Bolts, Thermocouple Instrumentation Columns/ Conduit/Bolts)	SS	Stainless Steel	Reactor Coolant (Ext)	Cracking	Water Chemistry (B2.1.2) and FSAR supplement commitment to (1) participate in industry RVI aging programs (2) implement applicable results (3) submit for NRC approval > 24 months before the extended period an RVI inspection plan based on industry recommendation	IV.B2-12	3.1.1.30	A
RVI Instrumentation Support Structures (Flux Thimble Guide Columns and Bolts, Thermocouple Instrumentation Columns/ Conduit/Bolts)	SS	Stainless Steel	Reactor Coolant (Ext)	Loss of material	Water Chemistry (B2.1.2)	IV.B2-32	3.1.1.83	A

Table 3.1.2-1 Reactor Vessel, Internals, and Reactor Coolant System – Summary of Aging Management Evaluation – Reactor Vessel and Internals (Continued)

Component Type	Intended Function	Material	Environment	Aging Effect Requiring Management	Aging Management Program	NUREG-1801 Vol. 2 Item	Table 1 Item	Notes
RVI Irradiation Specimen Basket (Vessel Irradiation Specimen Basket)	SS	Stainless Steel	Reactor Coolant (Ext)	Cracking	Water Chemistry (B2.1.2) and FSAR supplement commitment to (1) participate in industry RVI aging programs (2) implement applicable results (3) submit for NRC approval > 24 months before the extended period an RVI inspection plan based on industry recommendation	IV.B2-20	3.1.1.37	C
RVI Irradiation Specimen Basket (Vessel Irradiation Specimen Basket)	SS	Stainless Steel	Reactor Coolant (Ext)	Loss of material	Water Chemistry (B2.1.2)	IV.B2-32	3.1.1.83	A
RVI Lower Core Support Structure (Clevis Insert Bolts, Radial Keys, Clevis Insert Keyways)	SS	Nickel Alloys	Reactor Coolant (Ext)	Loss of preload	FSAR supplement commitment to (1) participate in industry RVI aging programs (2) implement applicable results (3) submit for NRC approval > 24 months before the extended period an RVI inspection plan based on industry recommendation.	IV.B2-14	3.1.1.27	A

Table 3.1.2-1 Reactor Vessel, Internals, and Reactor Coolant System – Summary of Aging Management Evaluation – Reactor Vessel and Internals (Continued)

Component Type	Intended Function	Material	Environment	Aging Effect Requiring Management	Aging Management Program	NUREG-1801 Vol. 2 Item	Table 1 Item	Notes
RVI Lower Core Support Structure (Clevis Insert Bolts, Radial Keys, Clevis Insert Keyways)	SS	Nickel Alloys	Reactor Coolant (Ext)	Changes in dimensions	FSAR supplement commitment to (1) participate in industry RVI aging programs (2) implement applicable results (3) submit for NRC approval > 24 months before the extended period an RVI inspection plan based on industry recommendation.	IV.B2-15	3.1.1.33	A
RVI Lower Core Support Structure (Clevis Insert Bolts, Radial Keys, Clevis Insert Keyways)	SS	Nickel Alloys	Reactor Coolant (Ext)	Cracking	Water Chemistry (B2.1.2) and FSAR supplement commitment to (1) participate in industry RVI aging programs (2) implement applicable results (3) submit for NRC approval > 24 months before the extended period an RVI inspection plan based on industry recommendation	IV.B2-16	3.1.1.37	A
RVI Lower Core Support Structure (Clevis Insert Bolts, Radial Keys, Clevis Insert Keyways)	SS	Nickel Alloys	Reactor Coolant (Ext)	Loss of fracture toughness	FSAR supplement commitment to (1) participate in industry RVI aging programs (2) implement applicable results (3) submit for NRC approval > 24 months before the extended period an RVI inspection plan based on industry recommendation.	IV.B2-17	3.1.1.22	A

Table 3.1.2-1 Reactor Vessel, Internals, and Reactor Coolant System – Summary of Aging Management Evaluation – Reactor Vessel and Internals (Continued)

Component Type	Intended Function	Material	Environment	Aging Effect Requiring Management	Aging Management Program	NUREG-1801 Vol. 2 Item	Table 1 Item	Notes
RVI Lower Core Support Structure (Clevis Insert Bolts, Radial Keys, Clevis Insert Keyways)	SS	Nickel Alloys	Reactor Coolant (Ext)	Changes in dimensions	FSAR supplement commitment to (1) participate in industry RVI aging programs (2) implement applicable results (3) submit for NRC approval > 24 months before the extended period an RVI inspection plan based on industry recommendation.	IV.B2-19	3.1.1.33	A
RVI Lower Core Support Structure (Clevis Insert Bolts, Radial Keys, Clevis Insert Keyways)	SS	Nickel Alloys	Reactor Coolant (Ext)	Cracking	Water Chemistry (B2.1.2) and FSAR supplement commitment to (1) participate in industry RVI aging programs (2) implement applicable results (3) submit for NRC approval > 24 months before the extended period an RVI inspection plan based on industry recommendation	IV.B2-20	3.1.1.37	A
RVI Lower Core Support Structure (Clevis Insert Bolts, Radial Keys, Clevis Insert Keyways)	SS	Nickel Alloys	Reactor Coolant (Ext)	Cumulative fatigue damage	Time-Limited Aging Analysis evaluated for the period of extended operation	IV.B2-31	3.1.1.05	A

Table 3.1.2-1 Reactor Vessel, Internals, and Reactor Coolant System – Summary of Aging Management Evaluation – Reactor Vessel and Internals (Continued)

Component Type	Intended Function	Material	Environment	Aging Effect Requiring Management	Aging Management Program	NUREG-1801 Vol. 2 Item	Table 1 Item	Notes
RVI Lower Core Support Structure (Clevis Insert Bolts, Radial Keys, Clevis Insert Keyways)	SS	Nickel Alloys	Reactor Coolant (Ext)	Loss of material	Water Chemistry (B2.1.2)	IV.B2-32	3.1.1.83	A
RVI Lower Core Support Structure (Clevis Insert Bolts, Radial Keys, Clevis Insert Keyways)	SS	Nickel Alloys	Reactor Coolant (Ext)	Loss of material	ASME Section XI Inservice Inspection, Subsections IWB, IWC, and IWD (B2.1.1)	IV.B2-34	3.1.1.63	C
RVI Lower Core Support Structure (Fuel Alignment Pins, Core Support Column & Bolts, Core Support Forging (U2), Lower Tie Plate (U2), Upper Tie Plate (U2), Manway Cover)	SS	Stainless Steel	Reactor Coolant (Ext)	Changes in dimensions	FSAR supplement commitment to (1) participate in industry RVI aging programs (2) implement applicable results (3) submit for NRC approval > 24 months before the extended period an RVI inspection plan based on industry recommendation.	IV.B2-15	3.1.1.33	A

Table 3.1.2-1 Reactor Vessel, Internals, and Reactor Coolant System – Summary of Aging Management Evaluation – Reactor Vessel and Internals (Continued)

Component Type	Intended Function	Material	Environment	Aging Effect Requiring Management	Aging Management Program	NUREG-1801 Vol. 2 Item	Table 1 Item	Notes
RVI Lower Core Support Structure (Fuel Alignment Pins, Core Support Column & Bolts, Core Support Forging (U2), Lower Tie Plate (U2), Upper Tie Plate (U2), Manway Cover)	SS	Stainless Steel	Reactor Coolant (Ext)	Cracking	Water Chemistry (B2.1.2) and FSAR supplement commitment to (1) participate in industry RVI aging programs (2) implement applicable results (3) submit for NRC approval > 24 months before the extended period an RVI inspection plan based on industry recommendation	IV.B2-16	3.1.1.37	A
RVI Lower Core Support Structure (Fuel Alignment Pins, Core Support Column & Bolts, Core Support Forging (U2), Lower Tie Plate (U2), Upper Tie Plate (U2), Manway Cover)	SS	Stainless Steel	Reactor Coolant (Ext)	Loss of fracture toughness	FSAR supplement commitment to (1) participate in industry RVI aging programs (2) implement applicable results (3) submit for NRC approval > 24 months before the extended period an RVI inspection plan based on industry recommendation.	IV.B2-17	3.1.1.22	A

Table 3.1.2-1 Reactor Vessel, Internals, and Reactor Coolant System – Summary of Aging Management Evaluation – Reactor Vessel and Internals (Continued)

Component Type	Intended Function	Material	Environment	Aging Effect Requiring Management	Aging Management Program	NUREG-1801 Vol. 2 Item	Table 1 Item	Notes
RVI Lower Core Support Structure (Lower Core Plate)	SS	Stainless Steel	Reactor Coolant (Ext)	Loss of fracture toughness	FSAR supplement commitment to (1) participate in industry RVI aging programs (2) implement applicable results (3) submit for NRC approval > 24 months before the extended period an RVI inspection plan based on industry recommendation.	IV.B2-18	3.1.1.22	A
RVI Lower Core Support Structure (Flow Diffuser Plate (Unit 1))	DF	Stainless Steel	Reactor Coolant (Ext)	Loss of fracture toughness	FSAR supplement commitment to (1) participate in industry RVI aging programs (2) implement applicable results (3) submit for NRC approval > 24 months before the extended period an RVI inspection plan based on industry recommendation.	IV.B2-18	3.1.1.22	C
RVI Lower Core Support Structure (Lower Core Plate)	DF	Stainless Steel	Reactor Coolant (Ext)	Loss of fracture toughness	FSAR supplement commitment to (1) participate in industry RVI aging programs (2) implement applicable results (3) submit for NRC approval > 24 months before the extended period an RVI inspection plan based on industry recommendation.	IV.B2-18	3.1.1.22	A

Table 3.1.2-1 Reactor Vessel, Internals, and Reactor Coolant System – Summary of Aging Management Evaluation – Reactor Vessel and Internals (Continued)

Component Type	Intended Function	Material	Environment	Aging Effect Requiring Management	Aging Management Program	NUREG-1801 Vol. 2 Item	Table 1 Item	Notes
RVI Lower Core Support Structure (Lower Core Plate)	DF	Stainless Steel	Reactor Coolant (Ext)	Changes in dimensions	FSAR supplement commitment to (1) participate in industry RVI aging programs (2) implement applicable results (3) submit for NRC approval > 24 months before the extended period an RVI inspection plan based on industry recommendation.	IV.B2-19	3.1.1.33	A
RVI Lower Core Support Structure (Flow Diffuser Plate (Unit 1))	DF	Stainless Steel	Reactor Coolant (Ext)	Changes in dimensions	FSAR supplement commitment to (1) participate in industry RVI aging programs (2) implement applicable results (3) submit for NRC approval > 24 months before the extended period an RVI inspection plan based on industry recommendation.	IV.B2-19	3.1.1.33	C
RVI Lower Core Support Structure (Lower Core Plate)	SS	Stainless Steel	Reactor Coolant (Ext)	Changes in dimensions	FSAR supplement commitment to (1) participate in industry RVI aging programs (2) implement applicable results (3) submit for NRC approval > 24 months before the extended period an RVI inspection plan based on industry recommendation.	IV.B2-19	3.1.1.33	A

Table 3.1.2-1 Reactor Vessel, Internals, and Reactor Coolant System – Summary of Aging Management Evaluation – Reactor Vessel and Internals (Continued)

Component Type	Intended Function	Material	Environment	Aging Effect Requiring Management	Aging Management Program	NUREG-1801 Vol. 2 Item	Table 1 Item	Notes
RVI Lower Core Support Structure (Lower Core Plate)	SS	Stainless Steel	Reactor Coolant (Ext)	Cracking	Water Chemistry (B2.1.2) and FSAR supplement commitment to (1) participate in industry RVI aging programs (2) implement applicable results (3) submit for NRC approval > 24 months before the extended period an RVI inspection plan based on industry recommendation	IV.B2-20	3.1.1.37	A
RVI Lower Core Support Structure (Lower Core Plate)	DF	Stainless Steel	Reactor Coolant (Ext)	Cracking	Water Chemistry (B2.1.2) and FSAR supplement commitment to (1) participate in industry RVI aging programs (2) implement applicable results (3) submit for NRC approval > 24 months before the extended period an RVI inspection plan based on industry recommendation	IV.B2-20	3.1.1.37	A
RVI Lower Core Support Structure (Flow Diffuser Plate (Unit 1))	DF	Stainless Steel	Reactor Coolant (Ext)	Cracking	Water Chemistry (B2.1.2) and FSAR supplement commitment to (1) participate in industry RVI aging programs (2) implement applicable results (3) submit for NRC approval > 24 months before the extended period an RVI inspection plan based on industry recommendation	IV.B2-20	3.1.1.37	C

Table 3.1.2-1 Reactor Vessel, Internals, and Reactor Coolant System – Summary of Aging Management Evaluation – Reactor Vessel and Internals (Continued)

Component Type	Intended Function	Material	Environment	Aging Effect Requiring Management	Aging Management Program	NUREG-1801 Vol. 2 Item	Table 1 Item	Notes
RVI Lower Core Support Structure (Fuel Alignment Pins, Core Support Column & Bolts, Core Support Forging (U2), Lower Tie Plate (U2), Upper Tie Plate (U2), Manway Cover)	SS	Stainless Steel	Reactor Coolant (Ext)	Loss of fracture toughness	FSAR supplement commitment to (1) participate in industry RVI aging programs (2) implement applicable results (3) submit for NRC approval > 24 months before the extended period an RVI inspection plan based on industry recommendation.	IV.B2-22	3.1.1.22	A
RVI Lower Core Support Structure (Fuel Alignment Pins, Core Support Column & Bolts, Core Support Forging (U2), Lower Tie Plate (U2), Upper Tie Plate (U2), Manway Cover)	SS	Stainless Steel	Reactor Coolant (Ext)	Changes in dimensions	FSAR supplement commitment to (1) participate in industry RVI aging programs (2) implement applicable results (3) submit for NRC approval > 24 months before the extended period an RVI inspection plan based on industry recommendation.	IV.B2-23	3.1.1.33	A

Table 3.1.2-1 Reactor Vessel, Internals, and Reactor Coolant System – Summary of Aging Management Evaluation – Reactor Vessel and Internals (Continued)

Component Type	Intended Function	Material	Environment	Aging Effect Requiring Management	Aging Management Program	NUREG-1801 Vol. 2 Item	Table 1 Item	Notes
RVI Lower Core Support Structure (Fuel Alignment Pins, Core Support Column & Bolts, Core Support Forging (U2), Lower Tie Plate (U2), Upper Tie Plate (U2), Manway Cover)	SS	Stainless Steel	Reactor Coolant (Ext)	Cracking	Water Chemistry (B2.1.2) and FSAR supplement commitment to (1) participate in industry RVI aging programs (2) implement applicable results (3) submit for NRC approval > 24 months before the extended period an RVI inspection plan based on industry recommendation	IV.B2-24	3.1.1.30	A
RVI Lower Core Support Structure (Fuel Alignment Pins, Core Support Column & Bolts, Core Support Forging (U2), Lower Tie Plate (U2), Upper Tie Plate (U2), Manway Cover)	SS	Stainless Steel	Reactor Coolant (Ext)	Loss of preload	FSAR supplement commitment to (1) participate in industry RVI aging programs (2) implement applicable results (3) submit for NRC approval > 24 months before the extended period an RVI inspection plan based on industry recommendation.	IV.B2-25	3.1.1.27	A
RVI Lower Core Support Structure (All RVI Stainless Steel Components)	DF, SLD, SS	Stainless Steel	Reactor Coolant (Ext)	Cumulative fatigue damage	Time-Limited Aging Analysis evaluated for the period of extended operation	IV.B2-31	3.1.1.05	A

Table 3.1.2-1 Reactor Vessel, Internals, and Reactor Coolant System – Summary of Aging Management Evaluation – Reactor Vessel and Internals (Continued)

Component Type	Intended Function	Material	Environment	Aging Effect Requiring Management	Aging Management Program	NUREG-1801 Vol. 2 Item	Table 1 Item	Notes
RVI Lower Core Support Structure (All RVI Stainless Steel Components)	DF, SS	Stainless Steel	Reactor Coolant (Ext)	Loss of material	Water Chemistry (B2.1.2)	IV.B2-32	3.1.1.83	A
RVI Lower Core Support Structure (Core Support Casting (U1))	SS	Stainless Steel Cast Austenitic	Reactor Coolant (Ext)	Loss of fracture toughness	Water Chemistry (B2.1.2) and FSAR supplement commitment to (1) participate in industry RVI aging programs (2) implement applicable results (3) submit for NRC approval > 24 months before the extended period an RVI inspection plan based on industry recommendation	IV.B2-21	3.1.1.80	E, 3
RVI Lower Core Support Structure (Core Support Casting (U1))	SS	Stainless Steel Cast Austenitic	Reactor Coolant (Ext)	Changes in dimensions	FSAR supplement commitment to (1) participate in industry RVI aging programs (2) implement applicable results (3) submit for NRC approval > 24 months before the extended period an RVI inspection plan based on industry recommendation.	IV.B2-23	3.1.1.33	A

Table 3.1.2-1 Reactor Vessel, Internals, and Reactor Coolant System – Summary of Aging Management Evaluation – Reactor Vessel and Internals (Continued)

Component Type	Intended Function	Material	Environment	Aging Effect Requiring Management	Aging Management Program	NUREG-1801 Vol. 2 Item	Table 1 Item	Notes
RVI Lower Core Support Structure (Core Support Casting (U1))	SS	Stainless Steel Cast Austenitic	Reactor Coolant (Ext)	Cracking	Water Chemistry (B2.1.2) and FSAR supplement commitment to (1) participate in industry RVI aging programs (2) implement applicable results (3) submit for NRC approval > 24 months before the extended period an RVI inspection plan based on industry recommendation	IV.B2-24	3.1.1.30	A
RVI Lower Core Support Structure (Core Support Casting (U1))	SS	Stainless Steel Cast Austenitic	Reactor Coolant (Ext)	Cumulative fatigue damage	Time-Limited Aging Analysis evaluated for the period of extended operation	IV.B2-31	3.1.1.05	A
RVI Lower Core Support Structure (Core Support Casting (U1))	SS	Stainless Steel Cast Austenitic	Reactor Coolant (Ext)	Loss of material	Water Chemistry (B2.1.2)	IV.B2-32	3.1.1.83	A
RVI Thermal & Neutron Shield (Thermal (U1)/Neutron (U2) Shield and Bolting)	SLD	Stainless Steel	Reactor Coolant (Ext)	Changes in dimensions	FSAR supplement commitment to (1) participate in industry RVI aging programs (2) implement applicable results (3) submit for NRC approval > 24 months before the extended period an RVI inspection plan based on industry recommendation.	IV.B2-7	3.1.1.33	A

Table 3.1.2-1 Reactor Vessel, Internals, and Reactor Coolant System – Summary of Aging Management Evaluation – Reactor Vessel and Internals (Continued)

Component Type	Intended Function	Material	Environment	Aging Effect Requiring Management	Aging Management Program	NUREG-1801 Vol. 2 Item	Table 1 Item	Notes
RVI Thermal & Neutron Shield (Thermal (U1)/Neutron (U2) Shield and Bolting)	SLD	Stainless Steel	Reactor Coolant (Ext)	Cracking	Water Chemistry (B2.1.2) and FSAR supplement commitment to (1) participate in industry RVI aging programs (2) implement applicable results (3) submit for NRC approval > 24 months before the extended period an RVI inspection plan based on industry recommendation	IV.B2-8	3.1.1.30	A
RVI Thermal & Neutron Shield (Thermal (U1)/Neutron (U2) Shield and Bolting)	SLD	Stainless Steel	Reactor Coolant (Ext)	Loss of fracture toughness	FSAR supplement commitment to (1) participate in industry RVI aging programs (2) implement applicable results (3) submit for NRC approval > 24 months before the extended period an RVI inspection plan based on industry recommendation.	IV.B2-9	3.1.1.22	A
RVI Thermal & Neutron Shield (Thermal (U1)/Neutron (U2) Shield and Bolting)	SLD	Stainless Steel	Reactor Coolant (Ext)	Loss of material	Water Chemistry (B2.1.2)	IV.B2-32	3.1.1.83	A

Table 3.1.2-1 Reactor Vessel, Internals, and Reactor Coolant System – Summary of Aging Management Evaluation – Reactor Vessel and Internals (Continued)

Component Type	Intended Function	Material	Environment	Aging Effect Requiring Management	Aging Management Program	NUREG-1801 Vol. 2 Item	Table 1 Item	Notes
RVI Upper Core Support Structure (Upper Core Plate, Upper Support Plate, Upper Support Columns Bolts, Alignment Pins)	SS	Stainless Steel	Reactor Coolant (Ext)	Cumulative fatigue damage	Time-Limited Aging Analysis evaluated for the period of extended operation	IV.B2-31	3.1.1.05	A
RVI Upper Core Support Structure (Upper Core Plate, Upper Support Plate, Upper Support Columns Bolts, Alignment Pins)	SS	Stainless Steel	Reactor Coolant (Ext)	Loss of material	Water Chemistry (B2.1.2)	IV.B2-32	3.1.1.83	A
RVI Upper Core Support Structure (Upper Core Plate, Upper Support Plate, Upper Support Columns Bolts, Alignment Pins)	SS	Stainless Steel	Reactor Coolant (Ext)	Loss of material	ASME Section XI Inservice Inspection, Subsections IWB, IWC, and IWD (B2.1.1)	IV.B2-34	3.1.1.63	A

Table 3.1.2-1 Reactor Vessel, Internals, and Reactor Coolant System – Summary of Aging Management Evaluation – Reactor Vessel and Internals (Continued)

Component Type	Intended Function	Material	Environment	Aging Effect Requiring Management	Aging Management Program	NUREG-1801 Vol. 2 Item	Table 1 Item	Notes
RVI Upper Core Support Structure (Upper Core Plate, Upper Support Plate, Upper Support Columns Bolts, Alignment Pins)	SS	Stainless Steel	Reactor Coolant (Ext)	Loss of preload	FSAR supplement commitment to (1) participate in industry RVI aging programs (2) implement applicable results (3) submit for NRC approval > 24 months before the extended period an RVI inspection plan based on industry recommendation.	IV.B2-38	3.1.1.27	A
RVI Upper Core Support Structure (Upper Core Plate, Upper Support Plate, Upper Support Columns Bolts, Alignment Pins)	SS	Stainless Steel	Reactor Coolant (Ext)	Changes in dimensions	FSAR supplement commitment to (1) participate in industry RVI aging programs (2) implement applicable results (3) submit for NRC approval > 24 months before the extended period an RVI inspection plan based on industry recommendation.	IV.B2-39	3.1.1.33	A
RVI Upper Core Support Structure (Upper Core Plate, Upper Support Plate, Upper Support Columns Bolts, Alignment Pins)	SS	Stainless Steel	Reactor Coolant (Ext)	Cracking	Water Chemistry (B2.1.2) and FSAR supplement commitment to (1) participate in industry RVI aging programs (2) implement applicable results (3) submit for NRC approval > 24 months before the extended period an RVI inspection plan based on industry recommendation	IV.B2-40	3.1.1.37	A

Table 3.1.2-1 Reactor Vessel, Internals, and Reactor Coolant System – Summary of Aging Management Evaluation – Reactor Vessel and Internals (Continued)

Component Type	Intended Function	Material	Environment	Aging Effect Requiring Management	Aging Management Program	NUREG-1801 Vol. 2 Item	Table 1 Item	Notes
RVI Upper Core Support Structure (Upper Core Plate, Upper Support Plate, Upper Support Columns Bolts, Alignment Pins)	SS	Stainless Steel	Reactor Coolant (Ext)	Changes in dimensions	FSAR supplement commitment to (1) participate in industry RVI aging programs (2) implement applicable results (3) submit for NRC approval > 24 months before the extended period an RVI inspection plan based on industry recommendation.	IV.B2-41	3.1.1.33	A
RVI Upper Core Support Structure (Upper Core Plate, Upper Support Plate, Upper Support Columns Bolts, Alignment Pins)	SS	Stainless Steel	Reactor Coolant (Ext)	Cracking	Water Chemistry (B2.1.2) and FSAR supplement commitment to (1) participate in industry RVI aging programs (2) implement applicable results (3) submit for NRC approval > 24 months before the extended period an RVI inspection plan based on industry recommendation	IV.B2-42	3.1.1.30	A
RVI Upper Core Support Structure (Upper Support Columns)	SS	Stainless Steel Cast Austenitic	Reactor Coolant (Ext)	Cumulative fatigue damage	Time-Limited Aging Analysis evaluated for the period of extended operation	IV.B2-31	3.1.1.05	A
RVI Upper Core Support Structure (Upper Support Columns)	SS	Stainless Steel Cast Austenitic	Reactor Coolant (Ext)	Loss of material	Water Chemistry (B2.1.2)	IV.B2-32	3.1.1.83	A

Table 3.1.2-1 Reactor Vessel, Internals, and Reactor Coolant System – Summary of Aging Management Evaluation – Reactor Vessel and Internals (Continued)

Component Type	Intended Function	Material	Environment	Aging Effect Requiring Management	Aging Management Program	NUREG-1801 Vol. 2 Item	Table 1 Item	Notes
RVI Upper Core Support Structure (Upper Support Columns)	SS	Stainless Steel Cast Austenitic	Reactor Coolant (Ext)	Changes in dimensions	FSAR supplement commitment to (1) participate in industry RVI aging programs (2) implement applicable results (3) submit for NRC approval > 24 months before the extended period an RVI inspection plan based on industry recommendation.	IV.B2-35	3.1.1.33	A
RVI Upper Core Support Structure (Upper Support Columns)	SS	Stainless Steel Cast Austenitic	Reactor Coolant (Ext)	Cracking	Water Chemistry (B2.1.2) and FSAR supplement commitment to (1) participate in industry RVI aging programs (2) implement applicable results (3) submit for NRC approval > 24 months before the extended period an RVI inspection plan based on industry recommendation	IV.B2-36	3.1.1.30	A
RVI Upper Core Support Structure (Upper Support Columns)	SS	Stainless Steel Cast Austenitic	Reactor Coolant (Ext)	Loss of fracture toughness	Water Chemistry (B2.1.2) and FSAR supplement commitment to (1) participate in industry RVI aging programs (2) implement applicable results (3) submit for NRC approval > 24 months before the extended period an RVI inspection plan based on industry recommendation	IV.B2-37	3.1.1.80	E, 3

Table 3.1.2-1 Reactor Vessel, Internals, and Reactor Coolant System – Summary of Aging Management Evaluation – Reactor Vessel and Internals (Continued)

Component Type	Intended Function	Material	Environment	Aging Effect Requiring Management	Aging Management Program	NUREG-1801 Vol. 2 Item	Table 1 Item	Notes
Seal Table (BMI Seal Table)	SS	Stainless Steel	Borated Water Leakage (Ext)	None	None	IV.E-3	3.1.1.86	C

Notes for Table 3.1.2-1:

Standard Notes:

A Consistent with NUREG-1801 item for component, material, environment, and aging effect. AMP is consistent with NUREG-1801 AMP.

B Consistent with NUREG-1801 item for component, material, environment, and aging effect. AMP takes some exceptions to NUREG-1801 AMP.

C Component is different, but consistent with NUREG-1801 item for material, environment, and aging effect. AMP is consistent with NUREG-1801 AMP.

E Consistent with NUREG-1801 for material, environment, and aging effect, but a different aging management program is credited or NUREG-1801 identifies a plant-specific aging management program.

G Environment not in NUREG-1801 for this component and material.

Plant Specific Notes:

1 Includes the plant specific Nickel-Alloy Aging Management Program (B2.1.37) in addition to the programs identified in NUREG-1801.

2 NUREG-1801 does not address the aging of nickel-alloys in borated water leakage. Nickel-alloys subject to an air with borated water leakage environment are similar to stainless steel in a borated water leakage environment and do not experience aging effects due to borated water leakage.

3 The commitment to implement the RVI inspection plan will manage this aging effect.

Table 3.1.2-2 Reactor Vessel, Internals, and Reactor Coolant System – Summary of Aging Management Evaluation – Reactor Coolant System

Component Type	Intended Function	Material	Environment	Aging Effect Requiring Management	Aging Management Program	NUREG-1801 Vol. 2 Item	Table 1 Item	Notes
Bellows	LBS, PB	Stainless Steel	Borated Water Leakage (Ext)	None	None	IV.E-3	3.1.1.86	A
Bellows	PB	Stainless Steel	Demineralized Water (Int)	Loss of material	Water Chemistry (B2.1.2) and One-Time Inspection (B2.1.16)	V.C-4	3.2.1.03	C
Bellows	PB	Stainless Steel	Plant Indoor Air (Ext)	None	None	IV.E-2	3.1.1.86	A
Bellows	PB	Stainless Steel	Reactor Coolant (Int)	Cracking	ASME Section XI Inservice Inspection, Subsections IWB, IWC, and IWD for Class 1 components (B2.1.1) and Water Chemistry (B2.1.2)	IV.C2-2	3.1.1.68	A
Bellows	PB	Stainless Steel	Reactor Coolant (Int)	Loss of material	Water Chemistry (B2.1.2) and One-Time Inspection (B2.1.16)	IV.C2-15	3.1.1.83	E, 3
Bellows	LBS	Stainless Steel	Treated Borated Water (Int)	Loss of material	Water Chemistry (B2.1.2) and One-Time Inspection (B2.1.16)	V.D1-30	3.2.1.49	E, 3
Bellows	LBS	Stainless Steel	Treated Borated Water (Int)	Cracking	Water Chemistry (B2.1.2) and One-Time Inspection (B2.1.16)	V.D1-31	3.2.1.48	E, 3
Class 1 Piping <= 4in	PB	Stainless Steel	Borated Water Leakage (Ext)	None	None	IV.E-3	3.1.1.86	A

Table 3.1.2-2 Reactor Vessel, Internals, and Reactor Coolant System – Summary of Aging Management Evaluation – Reactor Coolant System (Continued)

Component Type	Intended Function	Material	Environment	Aging Effect Requiring Management	Aging Management Program	NUREG-1801 Vol. 2 Item	Table 1 Item	Notes
Class 1 Piping <= 4in	PB	Stainless Steel	Reactor Coolant (Int)	Cracking	ASME Section XI Inservice Inspection, Subsections IWB, IWC, and IWD for Class 1 components (B2.1.1) and Water Chemistry (B2.1.2) and One-Time Inspection of ASME Code Class 1 Small-Bore Piping (B2.1.19)	IV.C2-1	3.1.1.70	B
Class 1 Piping <= 4in	PB	Stainless Steel	Reactor Coolant (Int)	Loss of material	Water Chemistry (B2.1.2) and One-Time Inspection (B2.1.16)	IV.C2-15	3.1.1.83	E, 3
Closure Bolting	PB	Stainless Steel	Borated Water Leakage (Ext)	Cracking	Bolting Integrity (B2.1.7)	IV.C2-7	3.1.1.52	B
Closure Bolting	PB	Stainless Steel	Borated Water Leakage (Ext)	Loss of preload	Bolting Integrity (B2.1.7)	IV.C2-8	3.1.1.52	B
Closure Bolting	PB	Stainless Steel	Borated Water Leakage (Ext)	Cumulative fatigue damage	Time-Limited Aging Analysis evaluated for the period of extended operation	IV.C2-10	3.1.1.07	A
Closure Bolting	PB	Stainless Steel	Borated Water Leakage (Ext)	None	None	IV.E-3	3.1.1.86	C

Table 3.1.2-2 Reactor Vessel, Internals, and Reactor Coolant System – Summary of Aging Management Evaluation – Reactor Coolant System (Continued)

Component Type	Intended Function	Material	Environment	Aging Effect Requiring Management	Aging Management Program	NUREG-1801 Vol. 2 Item	Table 1 Item	Notes
Heat Exchanger (RCP Seal Cooler)	HT, PB	Stainless Steel	Closed Cycle Cooling Water (Ext)	Loss of material	Closed-Cycle Cooling Water System (B2.1.10)	V.A-7	3.2.1.28	B
Heat Exchanger (RCP Seal Cooler)	HT, PB	Stainless Steel	Closed Cycle Cooling Water (Ext)	Reduction of heat transfer	Closed-Cycle Cooling Water System (B2.1.10)	V.D1-9	3.2.1.30	B
Heat Exchanger (RCP Seal Cooler)	HT, PB	Stainless Steel	Reactor Coolant (Int)	Cracking	ASME Section XI Inservice Inspection, Subsections IWB, IWC, and IWD for Class 1 components (B2.1.1) and Water Chemistry (B2.1.2)	IV.C2-5	3.1.1.68	C
Heat Exchanger (RCP Seal Cooler)	HT, PB	Stainless Steel	Reactor Coolant (Int)	Loss of material	Water Chemistry (B2.1.2) and One-Time Inspection (B2.1.16)	IV.C2-15	3.1.1.83	E, 3
Heat Exchanger (RPV Support Cooler Plate)	LBS, SS	Carbon Steel	Closed Cycle Cooling Water (Int)	Loss of material	Closed-Cycle Cooling Water System (B2.1.10)	IV.C2-14	3.1.1.53	D

Table 3.1.2-2 Reactor Vessel, Internals, and Reactor Coolant System – Summary of Aging Management Evaluation – Reactor Coolant System (Continued)

Component Type	Intended Function	Material	Environment	Aging Effect Requiring Management	Aging Management Program	NUREG-1801 Vol. 2 Item	Table 1 Item	Notes
Heat Exchanger (RPV Support Cooler Plate)	LBS, SS	Carbon Steel	Plant Indoor Air (Ext)	Loss of material	External Surfaces Monitoring Program (B2.1.20)	V.C-1	3.2.1.31	D
Insulation	INS	Insulation Calcium Silicate	Borated Water Leakage (Ext)	None	None	None	None	F
Orifice	PB, TH	Stainless Steel	Borated Water Leakage (Ext)	None	None	IV.E-3	3.1.1.86	A
Orifice	PB, TH	Stainless Steel	Reactor Coolant (Int)	Cracking	ASME Section XI Inservice Inspection, Subsections IWB, IWC, and IWD for Class 1 components (B2.1.1) and Water Chemistry (B2.1.2)	IV.C2-2	3.1.1.68	A
Orifice	PB, TH	Stainless Steel	Reactor Coolant (Int)	Loss of material	Water Chemistry (B2.1.2) and One-Time Inspection (B2.1.16)	IV.C2-15	3.1.1.83	E, 3
Piping	PB, SIA	Carbon Steel	Dry Gas (Int)	None	None	V.F-18	3.2.1.56	A
Piping	PB	Carbon Steel	Plant Indoor Air (Ext)	Loss of material	External Surfaces Monitoring Program (B2.1.20)	V.C-1	3.2.1.31	B

Table 3.1.2-2 Reactor Vessel, Internals, and Reactor Coolant System – Summary of Aging Management Evaluation – Reactor Coolant System (Continued)

Component Type	Intended Function	Material	Environment	Aging Effect Requiring Management	Aging Management Program	NUREG-1801 Vol. 2 Item	Table 1 Item	Notes
Piping	SIA	Carbon Steel	Plant Indoor Air (Ext)	Loss of material	External Surfaces Monitoring Program (B2.1.20)	V.C-1	3.2.1.31	D
Piping	SIA	Carbon Steel	Plant Indoor Air (Int)	Loss of material	Inspection of Internal Surfaces in Miscellaneous Piping and Ducting Components (B2.1.22)	V.A-19	3.2.1.32	B
Piping	LBS, PB, SIA	Stainless Steel	Borated Water Leakage (Ext)	None	None	IV.E-3	3.1.1.86	A
Piping	LBS, PB, SIA	Stainless Steel	Demineralized Water (Int)	Loss of material	Water Chemistry (B2.1.2) and One-Time Inspection (B2.1.16)	V.C-4	3.2.1.03	C
Piping	PB, SIA	Stainless Steel	Dry Gas (Int)	None	None	IV.E-5	3.1.1.86	A
Piping	LBS, PB, SIA	Stainless Steel	Plant Indoor Air (Ext)	None	None	IV.E-2	3.1.1.86	A
Piping	PB	Stainless Steel	Reactor Coolant (Int)	Cracking	ASME Section XI Inservice Inspection, Subsections IWB, IWC, and IWD for Class 1 components (B2.1.1) and Water Chemistry (B2.1.2)	IV.C2-2	3.1.1.68	A

Table 3.1.2-2 Reactor Vessel, Internals, and Reactor Coolant System – Summary of Aging Management Evaluation – Reactor Coolant System (Continued)

Component Type	Intended Function	Material	Environment	Aging Effect Requiring Management	Aging Management Program	NUREG-1801 Vol. 2 Item	Table 1 Item	Notes
Piping	PB	Stainless Steel	Reactor Coolant (Int)	Loss of material	Water Chemistry (B2.1.2) and One-Time Inspection (B2.1.16)	IV.C2-15	3.1.1.83	E, 3
Piping	PB	Stainless Steel	Reactor Coolant (Int)	Cumulative fatigue damage	Time-Limited Aging Analysis evaluated for the period of extended operation	IV.C2-25	3.1.1.08	A
Piping	PB	Stainless Steel	Reactor Coolant (Int)	Cracking	ASME Section XI Inservice Inspection, Subsections IWB, IWC, and IWD (B2.1.1)	IV.C2-26	3.1.1.62	A
Piping	PB	Stainless Steel	Reactor Coolant (Int)	Cracking	ASME Section XI Inservice Inspection, Subsections IWB, IWC, and IWD for Class 1 components (B2.1.1) and Water Chemistry (B2.1.2)	IV.C2-27	3.1.1.68	A
Piping	LBS, PB, SIA	Stainless Steel	Treated Borated Water (Int)	Loss of material	Water Chemistry (B2.1.2) and One-Time Inspection (B2.1.16)	V.D1-30	3.2.1.49	E, 3
Piping	LBS, PB, SIA	Stainless Steel	Treated Borated Water (Int)	Cracking	Water Chemistry (B2.1.2) and One-Time Inspection (B2.1.16)	V.D1-31	3.2.1.48	E, 3

Table 3.1.2-2 Reactor Vessel, Internals, and Reactor Coolant System – Summary of Aging Management Evaluation – Reactor Coolant System (Continued)

Component Type	Intended Function	Material	Environment	Aging Effect Requiring Management	Aging Management Program	NUREG-1801 Vol. 2 Item	Table 1 Item	Notes
Piping	PB	Stainless Steel Cast Austenitic	Borated Water Leakage (Ext)	None	None	IV.E-3	3.1.1.86	A
Piping	PB	Stainless Steel Cast Austenitic	Reactor Coolant (Int)	Cracking	Water Chemistry (B2.1.2) and ASME Section XI Inservice Inspection, Subsections IWB, IWC, and IWD (B2.1.1)	IV.C2-3	3.1.1.24	E, 1
Piping	PB	Stainless Steel Cast Austenitic	Reactor Coolant (Int)	Loss of fracture toughness	Thermal Aging Embrittlement of Cast Austenitic Stainless Steel (CASS) (B2.1.39)	IV.C2-4	3.1.1.57	A
Piping	PB	Stainless Steel Cast Austenitic	Reactor Coolant (Int)	Loss of material	Water Chemistry (B2.1.2) and One-Time Inspection (B2.1.16)	IV.C2-15	3.1.1.83	E, 3
Piping	PB	Stainless Steel Cast Austenitic	Reactor Coolant (Int)	Cumulative fatigue damage	Time-Limited Aging Analysis evaluated for the period of extended operation	IV.C2-25	3.1.1.08	A
Pump	PB	Stainless Steel Cast Austenitic	Borated Water Leakage (Ext)	None	None	IV.E-3	3.1.1.86	A

Table 3.1.2-2 Reactor Vessel, Internals, and Reactor Coolant System – Summary of Aging Management Evaluation – Reactor Coolant System (Continued)

Component Type	Intended Function	Material	Environment	Aging Effect Requiring Management	Aging Management Program	NUREG-1801 Vol. 2 Item	Table 1 Item	Notes
Pump	PB	Stainless Steel Cast Austenitic	Reactor Coolant (Int)	Cracking	ASME Section XI Inservice Inspection, Subsections IWB, IWC, and IWD for Class 1 components (B2.1.1) and Water Chemistry (B2.1.2)	IV.C2-5	3.1.1.68	A
Pump	PB	Stainless Steel Cast Austenitic	Reactor Coolant (Int)	Loss of fracture toughness	ASME Section XI Inservice Inspection, Subsections IWB, IWC, and IWD (B2.1.1)	IV.C2-6	3.1.1.55	A
Pump	PB	Stainless Steel Cast Austenitic	Reactor Coolant (Int)	Loss of material	Water Chemistry (B2.1.2) and One-Time Inspection (B2.1.16)	IV.C2-15	3.1.1.83	E, 3
Pump	PB	Stainless Steel Cast Austenitic	Reactor Coolant (Int)	Cumulative fatigue damage	Time-Limited Aging Analysis evaluated for the period of extended operation	IV.C2-25	3.1.1.08	A
Rupture Disc	LBS	Stainless Steel	Dry Gas (Int)	None	None	IV.E-5	3.1.1.86	A
Rupture Disc	LBS	Stainless Steel	Plant Indoor Air (Ext)	None	None	IV.E-2	3.1.1.86	A
Tank	LBS, SIA	Carbon Steel	Borated Water Leakage (Ext)	Loss of material	Boric Acid Corrosion (B2.1.4)	IV.C2-09	3.1.1.58	A
Tank	LBS, SIA	Carbon Steel	Dry Gas (Int)	None	None	V.F-18	3.2.1.56	C, 4

Table 3.1.2-2 Reactor Vessel, Internals, and Reactor Coolant System – Summary of Aging Management Evaluation – Reactor Coolant System (Continued)

Component Type	Intended Function	Material	Environment	Aging Effect Requiring Management	Aging Management Program	NUREG-1801 Vol. 2 Item	Table 1 Item	Notes
Tank	LBS	Carbon Steel	Treated Borated Water (Int)	Loss of material	Inspection of Internal Surfaces in Miscellaneous Piping and Ducting Components (B2.1.22)	None	None	G, 2
Tank	LBS	Stainless Steel	Borated Water Leakage (Ext)	None	None	V.F-13	3.2.1.57	C
Tank	LBS	Stainless Steel	Treated Borated Water (Int)	Loss of material	Water Chemistry (B2.1.2) and One-Time Inspection (B2.1.16)	V.D1-30	3.2.1.49	E, 3
Tank	LBS	Stainless Steel	Treated Borated Water (Int)	Cracking	Water Chemistry (B2.1.2) and One-Time Inspection (B2.1.16)	V.D1-31	3.2.1.48	E, 3
Tubing	LBS, PB	Stainless Steel	Borated Water Leakage (Ext)	None	None	IV.E-3	3.1.1.86	A
Tubing	LBS	Stainless Steel	Demineralized Water (Int)	Loss of material	Water Chemistry (B2.1.2) and One-Time Inspection (B2.1.16)	V.C-4	3.2.1.03	C
Tubing	LBS	Stainless Steel	Plant Indoor Air (Ext)	None	None	IV.E-2	3.1.1.86	A

Table 3.1.2-2 Reactor Vessel, Internals, and Reactor Coolant System – Summary of Aging Management Evaluation – Reactor Coolant System (Continued)

Component Type	Intended Function	Material	Environment	Aging Effect Requiring Management	Aging Management Program	NUREG-1801 Vol. 2 Item	Table 1 Item	Notes
Tubing	PB	Stainless Steel	Reactor Coolant (Int)	Cracking	ASME Section XI Inservice Inspection, Subsections IWB, IWC, and IWD for Class 1 components (B2.1.1) and Water Chemistry (B2.1.2)	IV.C2-2	3.1.1.68	A
Tubing	PB	Stainless Steel	Reactor Coolant (Int)	Loss of material	Water Chemistry (B2.1.2) and One-Time Inspection (B2.1.16)	IV.C2-15	3.1.1.83	E, 3
Tubing	PB	Stainless Steel	Reactor Coolant (Int)	Cracking	ASME Section XI Inservice Inspection, Subsections IWB, IWC, and IWD (B2.1.1)	IV.C2-26	3.1.1.62	A
Tubing	LBS	Stainless Steel	Treated Borated Water (Int)	Loss of material	Water Chemistry (B2.1.2) and One-Time Inspection (B2.1.16)	V.D1-30	3.2.1.49	E, 3
Tubing	LBS	Stainless Steel	Treated Borated Water (Int)	Cracking	Water Chemistry (B2.1.2) and One-Time Inspection (B2.1.16)	V.D1-31	3.2.1.48	E, 3
Valve	LBS	Carbon Steel	Demineralized Water (Int)	Loss of material	Water Chemistry (B2.1.2) and One-Time Inspection (B2.1.16)	V.C-6	3.2.1.15	C
Valve	PB, SIA	Carbon Steel	Dry Gas (Int)	None	None	V.F-18	3.2.1.56	A

Table 3.1.2-2 Reactor Vessel, Internals, and Reactor Coolant System – Summary of Aging Management Evaluation – Reactor Coolant System (Continued)

Component Type	Intended Function	Material	Environment	Aging Effect Requiring Management	Aging Management Program	NUREG-1801 Vol. 2 Item	Table 1 Item	Notes
Valve	LBS, PB, SIA	Carbon Steel	Plant Indoor Air (Ext)	Loss of material	External Surfaces Monitoring Program (B2.1.20)	V.C-1	3.2.1.31	D
Valve	LBS, PB, SIA	Stainless Steel	Borated Water Leakage (Ext)	None	None	IV.E-3	3.1.1.86	A
Valve	LBS, PB, SIA	Stainless Steel	Demineralized Water (Int)	Loss of material	Water Chemistry (B2.1.2) and One-Time Inspection (B2.1.16)	V.C-4	3.2.1.03	C
Valve	PB, SIA	Stainless Steel	Dry Gas (Int)	None	None	IV.E-5	3.1.1.86	A
Valve	LBS, PB, SIA	Stainless Steel	Plant Indoor Air (Ext)	None	None	IV.E-2	3.1.1.86	A
Valve	SIA	Stainless Steel	Plant Indoor Air (Int)	Loss of material	Inspection of Internal Surfaces in Miscellaneous Piping and Ducting Components (B2.1.22)	V.D1-29	3.2.1.08	E
Valve	PB	Stainless Steel	Reactor Coolant (Int)	Cracking	ASME Section XI Inservice Inspection, Subsections IWB, IWC, and IWD for Class 1 components (B2.1.1) and Water Chemistry (B2.1.2)	IV.C2-5	3.1.1.68	A

Table 3.1.2-2 Reactor Vessel, Internals, and Reactor Coolant System – Summary of Aging Management Evaluation – Reactor Coolant System (Continued)

Component Type	Intended Function	Material	Environment	Aging Effect Requiring Management	Aging Management Program	NUREG-1801 Vol. 2 Item	Table 1 Item	Notes
Valve	PB	Stainless Steel	Reactor Coolant (Int)	Loss of material	Water Chemistry (B2.1.2) and One-Time Inspection (B2.1.16)	IV.C2-15	3.1.1.83	E, 3
Valve	PB	Stainless Steel	Reactor Coolant (Int)	Cracking	ASME Section XI Inservice Inspection, Subsections IWB, IWC, and IWD (B2.1.1)	IV.C2-26	3.1.1.62	A
Valve	PB	Stainless Steel	Reactor Coolant (Int)	Cracking	ASME Section XI Inservice Inspection, Subsections IWB, IWC, and IWD for Class 1 components (B2.1.1) and Water Chemistry (B2.1.2)	IV.C2-27	3.1.1.68	A
Valve	LBS, PB, SIA	Stainless Steel	Treated Borated Water (Int)	Loss of material	Water Chemistry (B2.1.2) and One-Time Inspection (B2.1.16)	V.D1-30	3.2.1.49	E, 3
Valve	LBS, PB, SIA	Stainless Steel	Treated Borated Water (Int)	Cracking	Water Chemistry (B2.1.2) and One-Time Inspection (B2.1.16)	V.D1-31	3.2.1.48	E, 3
Valve	PB	Stainless Steel Cast Austenitic	Borated Water Leakage (Ext)	None	None	IV.E-3	3.1.1.86	A

Table 3.1.2-2 Reactor Vessel, Internals, and Reactor Coolant System – Summary of Aging Management Evaluation – Reactor Coolant System (Continued)

Component Type	Intended Function	Material	Environment	Aging Effect Requiring Management	Aging Management Program	NUREG-1801 Vol. 2 Item	Table 1 Item	Notes
Valve	PB	Stainless Steel Cast Austenitic	Reactor Coolant (Int)	Cracking	Water Chemistry (B2.1.2) and ASME Section XI Inservice Inspection, Subsections IWB, IWC, and IWD (B2.1.1)	IV.C2-3	3.1.1.24	E, 1
Valve	PB	Stainless Steel Cast Austenitic	Reactor Coolant (Int)	Loss of fracture toughness	ASME Section XI Inservice Inspection, Subsections IWB, IWC, and IWD (B2.1.1)	IV.C2-6	3.1.1.55	A
Valve	PB	Stainless Steel Cast Austenitic	Reactor Coolant (Int)	Loss of material	Water Chemistry (B2.1.2) and One-Time Inspection (B2.1.16)	IV.C2-15	3.1.1.83	E, 3

Notes for Table 3.1.2-2:

Standard Notes:

A Consistent with NUREG-1801 item for component, material, environment, and aging effect. AMP is consistent with NUREG-1801 AMP.

B Consistent with NUREG-1801 item for component, material, environment, and aging effect. AMP takes some exceptions to NUREG-1801 AMP.

C Component is different, but consistent with NUREG-1801 item for material, environment, and aging effect. AMP is consistent with NUREG-1801 AMP.

D Component is different, but consistent with NUREG-1801 item for material, environment, and aging effect. AMP takes some exceptions to NUREG-1801 AMP.

E Consistent with NUREG-1801 for material, environment, and aging effect, but a different aging management program is credited or NUREG-1801 identifies a plant-specific aging management program.
F Material not in NUREG-1801 for this component.
G Environment not in NUREG-1801 for this component and material.

Plant Specific Notes:
1 Water Chemistry (B2.1.2) and ASME Section XI, Inservice Inspection, Subsections IWB, IWC, and IWD (B2.1.1) are used to manage this aging effect for Cast Austenitic Stainless Steel (CASS) components.
2 DCPP pressurizer relief tank shell and heads are constructed of ASTM A-285 Grade C carbon steel with an internal AMERCOAT 55 coating. The AMERCOAT 55 coating is not credited for the aging management.
3 The Water Chemistry program (B2.1.2) and the One-Time Inspection program (B2.1.16) manages loss of material due to pitting and crevice corrosion and cracking due to stress corrosion cracking. The One-Time Inspection program (B2.1.16) includes selected components at susceptible locations.
4 There is a gas blanket of pressurized N_2, thus the vapor content is negligible.

Table 3.1.2-3 Reactor Vessel, Internals, and Reactor Coolant System – Summary of Aging Management Evaluation – Pressurizer

Component Type	Intended Function	Material	Environment	Aging Effect Requiring Management	Aging Management Program	NUREG-1801 Vol. 2 Item	Table 1 Item	Notes
Closure Bolting	PB	Carbon Steel	Borated Water Leakage (Ext)	Loss of preload	Bolting Integrity (B2.1.7)	IV.C2-8	3.1.1.52	B
Closure Bolting	PB	Carbon Steel	Borated Water Leakage (Ext)	Loss of material	Boric Acid Corrosion (B2.1.4)	IV.C2-09	3.1.1.58	A
PZR Heater Support Plate	SS	Stainless Steel	Reactor Coolant (Ext)	Loss of material	Water Chemistry (B2.1.2)	IV.C2-15	3.1.1.83	A
PZR Heater Support Plate	SS	Stainless Steel	Reactor Coolant (Ext)	Cracking	ASME Section XI Inservice Inspection, Subsections IWB, IWC, and IWD for Class 1 components (B2.1.1) and Water Chemistry (B2.1.2)	IV.C2-18	3.1.1.67	A
PZR Heater Support Plate	SS	Stainless Steel	Reactor Coolant (Ext)	Cracking	ASME Section XI Inservice Inspection, Subsections IWB, IWC, and IWD for Class 1 components (B2.1.1) and Water Chemistry (B2.1.2)	IV.C2-20	3.1.1.68	A
PZR Heater Well Nozzle	PB	Stainless Steel	Borated Water Leakage (Ext)	None	None	IV.E-3	3.1.1.86	A
PZR Heater Well Nozzle	PB	Stainless Steel	Reactor Coolant (Int)	Loss of material	Water Chemistry (B2.1.2)	IV.C2-15	3.1.1.83	A

Table 3.1.2-3 Reactor Vessel, Internals, and Reactor Coolant System – Summary of Aging Management Evaluation – Pressurizer (Continued)

Component Type	Intended Function	Material	Environment	Aging Effect Requiring Management	Aging Management Program	NUREG-1801 Vol. 2 Item	Table 1 Item	Notes
PZR Heater Well Nozzle	PB	Stainless Steel	Reactor Coolant (Int)	Cracking	ASME Section XI Inservice Inspection, Subsections IWB, IWC, and IWD for Class 1 components (B2.1.1) and Water Chemistry (B2.1.2)	IV.C2-18	3.1.1.67	A
PZR Heater Well Nozzle	PB	Stainless Steel	Reactor Coolant (Int)	Cracking	ASME Section XI Inservice Inspection, Subsections IWB, IWC, and IWD for Class 1 components (B2.1.1) and Water Chemistry (B2.1.2)	IV.C2-20	3.1.1.68	A
PZR Heater Well Nozzle	PB	Stainless Steel	Reactor Coolant (Int)	Cumulative fatigue damage	Time-Limited Aging Analysis evaluated for the period of extended operation	IV.C2-25	3.1.1.08	A
PZR Manways and Covers	PB	Carbon Steel	Borated Water Leakage (Ext)	Loss of material	Boric Acid Corrosion (B2.1.4)	IV.C2-09	3.1.1.58	A
PZR Manways and Covers	PB	Carbon Steel with Stainless Steel Cladding	Borated Water Leakage (Ext)	Loss of material	Boric Acid Corrosion (B2.1.4)	IV.C2-09	3.1.1.58	A

Table 3.1.2-3 Reactor Vessel, Internals, and Reactor Coolant System – Summary of Aging Management Evaluation – Pressurizer (Continued)

Component Type	Intended Function	Material	Environment	Aging Effect Requiring Management	Aging Management Program	NUREG-1801 Vol. 2 Item	Table 1 Item	Notes
PZR Manways and Covers	PB	Carbon Steel with Stainless Steel Cladding	Reactor Coolant (Int)	Cracking	ASME Section XI Inservice Inspection, Subsections IWB, IWC, and IWD for Class 1 components (B2.1.1) and Water Chemistry (B2.1.2)	IV.C2-2	3.1.1.68	A
PZR Manways and Covers	PB	Carbon Steel with Stainless Steel Cladding	Reactor Coolant (Int)	Loss of material	Water Chemistry (B2.1.2)	IV.C2-15	3.1.1.83	A
PZR Manways and Covers	PB	Carbon Steel with Stainless Steel Cladding	Reactor Coolant (Int)	Cracking	ASME Section XI Inservice Inspection, Subsections IWB, IWC, and IWD for Class 1 components (B2.1.1) and Water Chemistry (B2.1.2)	IV.C2-18	3.1.1.67	A
PZR Manways and Covers	PB	Carbon Steel with Stainless Steel Cladding	Reactor Coolant (Int)	Cumulative fatigue damage	Time-Limited Aging Analysis evaluated for the period of extended operation	IV.C2-25	3.1.1.08	A

Table 3.1.2-3 Reactor Vessel, Internals, and Reactor Coolant System – Summary of Aging Management Evaluation – Pressurizer (Continued)

Component Type	Intended Function	Material	Environment	Aging Effect Requiring Management	Aging Management Program	NUREG-1801 Vol. 2 Item	Table 1 Item	Notes
PZR Manways and Covers	PB	Stainless Steel	Reactor Coolant (Ext)	Cracking	ASME Section XI Inservice Inspection, Subsections IWB, IWC, and IWD for Class 1 components (B2.1.1) and Water Chemistry (B2.1.2)	IV.C2-2	3.1.1.68	A
PZR Manways and Covers	PB	Stainless Steel	Reactor Coolant (Ext)	Loss of material	Water Chemistry (B2.1.2)	IV.C2-15	3.1.1.83	A
PZR Manways and Covers	PB	Stainless Steel	Reactor Coolant (Ext)	Cracking	ASME Section XI Inservice Inspection, Subsections IWB, IWC, and IWD for Class 1 components (B2.1.1) and Water Chemistry (B2.1.2)	IV.C2-18	3.1.1.67	A
PZR Nozzles	PB	Carbon Steel with Stainless Steel Cladding	Borated Water Leakage (Ext)	Loss of material	Boric Acid Corrosion (B2.1.4)	IV.C2-09	3.1.1.58	A

Table 3.1.2-3 Reactor Vessel, Internals, and Reactor Coolant System – Summary of Aging Management Evaluation – Pressurizer (Continued)

Component Type	Intended Function	Material	Environment	Aging Effect Requiring Management	Aging Management Program	NUREG-1801 Vol. 2 Item	Table 1 Item	Notes
PZR Nozzles	PB	Carbon Steel with Stainless Steel Cladding	Reactor Coolant (Int)	Cracking	ASME Section XI Inservice Inspection, Subsections IWB, IWC, and IWD for Class 1 components (B2.1.1) and Water Chemistry (B2.1.2)	IV.C2-2	3.1.1.68	A
PZR Nozzles	PB	Carbon Steel with Stainless Steel Cladding	Reactor Coolant (Int)	Loss of material	Water Chemistry (B2.1.2)	IV.C2-15	3.1.1.83	A
PZR Nozzles	PB	Carbon Steel with Stainless Steel Cladding	Reactor Coolant (Int)	Cracking	ASME Section XI Inservice Inspection, Subsections IWB, IWC, and IWD for Class 1 components (B2.1.1) and Water Chemistry (B2.1.2)	IV.C2-18	3.1.1.67	A
PZR Nozzles	PB	Carbon Steel with Stainless Steel Cladding	Reactor Coolant (Int)	Cumulative fatigue damage	Time-Limited Aging Analysis evaluated for the period of extended operation	IV.C2-25	3.1.1.08	A
PZR Nozzles	PB	Stainless Steel	Borated Water Leakage (Ext)	None	None	IV.E-3	3.1.1.86	A

Table 3.1.2-3 Reactor Vessel, Internals, and Reactor Coolant System – Summary of Aging Management Evaluation – Pressurizer (Continued)

Component Type	Intended Function	Material	Environment	Aging Effect Requiring Management	Aging Management Program	NUREG-1801 Vol. 2 Item	Table 1 Item	Notes
PZR Nozzles	SH	Stainless Steel	Reactor Coolant (Ext)	Cracking	ASME Section XI Inservice Inspection, Subsections IWB, IWC, and IWD for Class 1 components (B2.1.1) and Water Chemistry (B2.1.2)	IV.C2-2	3.1.1.68	A
PZR Nozzles	SH	Stainless Steel	Reactor Coolant (Ext)	Loss of material	Water Chemistry (B2.1.2)	IV.C2-15	3.1.1.83	A
PZR Nozzles	SH	Stainless Steel	Reactor Coolant (Ext)	Cracking	ASME Section XI Inservice Inspection, Subsections IWB, IWC, and IWD for Class 1 components (B2.1.1) and Water Chemistry (B2.1.2)	IV.C2-18	3.1.1.67	A
PZR Nozzles	PB	Stainless Steel	Reactor Coolant (Int)	Loss of material	Water Chemistry (B2.1.2)	IV.C2-15	3.1.1.83	A
PZR Nozzles	PB	Stainless Steel	Reactor Coolant (Int)	Cracking	ASME Section XI Inservice Inspection, Subsections IWB, IWC, and IWD for Class 1 components (B2.1.1) and Water Chemistry (B2.1.2)	IV.C2-18	3.1.1.67	A

Table 3.1.2-3 Reactor Vessel, Internals, and Reactor Coolant System – Summary of Aging Management Evaluation – Pressurizer (Continued)

Component Type	Intended Function	Material	Environment	Aging Effect Requiring Management	Aging Management Program	NUREG-1801 Vol. 2 Item	Table 1 Item	Notes
PZR Nozzles	PB	Stainless Steel	Reactor Coolant (Int)	Cracking	ASME Section XI Inservice Inspection, Subsections IWB, IWC, and IWD for Class 1 components (B2.1.1) and Water Chemistry (B2.1.2)	IV.C2-19	3.1.1.64	A
PZR Nozzles	PB	Stainless Steel	Reactor Coolant (Int)	Cumulative fatigue damage	Time-Limited Aging Analysis evaluated for the period of extended operation	IV.C2-25	3.1.1.08	A
PZR Safe Ends	PB	Nickel-alloys	Borated Water Leakage (Ext)	None	None	None	None	G, 1
PZR Safe Ends	PB	Nickel-alloys	Reactor Coolant (Int)	Loss of material	Water Chemistry (B2.1.2)	IV.C2-15	3.1.1.83	A
PZR Safe Ends	PB	Nickel-alloys	Reactor Coolant (Int)	Cracking	ASME Section XI Inservice Inspection, Subsections IWB, IWC, and IWD for Class 1 components (B2.1.1) and Water Chemistry (B2.1.2)	IV.C2-24	3.1.1.31	E, 2
PZR Safe Ends	PB	Nickel-alloys	Reactor Coolant (Int)	Cumulative fatigue damage	Time-Limited Aging Analysis evaluated for the period of extended operation	IV.C2-25	3.1.1.08	A

Table 3.1.2-3 Reactor Vessel, Internals, and Reactor Coolant System – Summary of Aging Management Evaluation – Pressurizer (Continued)

Component Type	Intended Function	Material	Environment	Aging Effect Requiring Management	Aging Management Program	NUREG-1801 Vol. 2 Item	Table 1 Item	Notes
PZR Safe Ends	PB	Stainless Steel	Borated Water Leakage (Ext)	None	None	IV.E-3	3.1.1.86	A
PZR Safe Ends	PB	Stainless Steel	Reactor Coolant (Int)	Cracking	ASME Section XI Inservice Inspection, Subsections IWB, IWC, and IWD for Class 1 components (B2.1.1) and Water Chemistry (B2.1.2)	IV.C2-2	3.1.1.68	A
PZR Safe Ends	PB	Stainless Steel	Reactor Coolant (Int)	Loss of material	Water Chemistry (B2.1.2)	IV.C2-15	3.1.1.83	A
PZR Safe Ends	PB	Stainless Steel	Reactor Coolant (Int)	Cracking	ASME Section XI Inservice Inspection, Subsections IWB, IWC, and IWD for Class 1 components (B2.1.1) and Water Chemistry (B2.1.2)	IV.C2-18	3.1.1.67	A
PZR Safe Ends	PB	Stainless Steel	Reactor Coolant (Int)	Cumulative fatigue damage	Time-Limited Aging Analysis evaluated for the period of extended operation	IV.C2-25	3.1.1.08	A
PZR Seismic Lug	SS	Carbon Steel	Borated Water Leakage (Ext)	Loss of material	Boric Acid Corrosion (B2.1.4)	IV.C2-09	3.1.1.58	A

Table 3.1.2-3 Reactor Vessel, Internals, and Reactor Coolant System – Summary of Aging Management Evaluation – Pressurizer (Continued)

Component Type	Intended Function	Material	Environment	Aging Effect Requiring Management	Aging Management Program	NUREG-1801 Vol. 2 Item	Table 1 Item	Notes
PZR Seismic Lug	SS	Carbon Steel	Borated Water Leakage (Ext)	Cumulative fatigue damage	Time-Limited Aging Analysis evaluated for the period of extended operation	IV.C2-10	3.1.1.07	A
PZR Seismic Lug	SS	Carbon Steel	Borated Water Leakage (Ext)	Cracking	ASME Section XI Inservice Inspection, Subsections IWB, IWC, and IWD (B2.1.1)	IV.C2-16	3.1.1.61	A
PZR Shell and Head	PB	Carbon Steel with Stainless Steel Cladding	Borated Water Leakage (Ext)	Loss of material	Boric Acid Corrosion (B2.1.4)	IV.C2-09	3.1.1.58	A
PZR Shell and Head	PB	Carbon Steel with Stainless Steel Cladding	Reactor Coolant (Int)	Loss of material	Water Chemistry (B2.1.2)	IV.C2-15	3.1.1.83	A
PZR Shell and Head	PB	Carbon Steel with Stainless Steel Cladding	Reactor Coolant (Int)	Cracking	ASME Section XI Inservice Inspection, Subsections IWB, IWC, and IWD for Class 1 components (B2.1.1) and Water Chemistry (B2.1.2)	IV.C2-18	3.1.1.67	A

Table 3.1.2-3 Reactor Vessel, Internals, and Reactor Coolant System – Summary of Aging Management Evaluation – Pressurizer (Continued)

Component Type	Intended Function	Material	Environment	Aging Effect Requiring Management	Aging Management Program	NUREG-1801 Vol. 2 Item	Table 1 Item	Notes
PZR Shell and Head	PB	Carbon Steel with Stainless Steel Cladding	Reactor Coolant (Int)	Cracking	ASME Section XI Inservice Inspection, Subsections IWB, IWC, and IWD for Class 1 components (B2.1.1) and Water Chemistry (B2.1.2)	IV.C2-19	3.1.1.64	A
PZR Shell and Head	PB	Carbon Steel with Stainless Steel Cladding	Reactor Coolant (Int)	Cumulative fatigue damage	Time-Limited Aging Analysis evaluated for the period of extended operation	IV.C2-25	3.1.1.08	A
PZR Spray Head	SP	Stainless Steel Cast Austenitic	Reactor Coolant (Ext)	Loss of material	Water Chemistry (B2.1.2)	IV.C2-15	3.1.1.83	A
PZR Spray Head	SP	Stainless Steel Cast Austenitic	Reactor Coolant (Ext)	Cracking	Water Chemistry (B2.1.2) and One-Time Inspection (B2.1.16)	IV.C2-17	3.1.1.36	A
PZR Spray Head	SP	Stainless Steel Cast Austenitic	Reactor Coolant (Int)	Loss of material	Water Chemistry (B2.1.2)	IV.C2-15	3.1.1.83	A
PZR Spray Head	SP	Stainless Steel Cast Austenitic	Reactor Coolant (Int)	Cracking	Water Chemistry (B2.1.2) and One-Time Inspection (B2.1.16)	IV.C2-17	3.1.1.36	A
PZR Support Skirt	SS	Carbon Steel	Borated Water Leakage (Ext)	Loss of material	Boric Acid Corrosion (B2.1.4)	IV.C2-09	3.1.1.58	A

Table 3.1.2-3 Reactor Vessel, Internals, and Reactor Coolant System – Summary of Aging Management Evaluation – Pressurizer (Continued)

Component Type	Intended Function	Material	Environment	Aging Effect Requiring Management	Aging Management Program	NUREG-1801 Vol. 2 Item	Table 1 Item	Notes
PZR Support Skirt	SS	Carbon Steel	Borated Water Leakage (Ext)	Cumulative fatigue damage	Time-Limited Aging Analysis evaluated for the period of extended operation	IV.C2-10	3.1.1.07	A
PZR Support Skirt	SS	Carbon Steel	Borated Water Leakage (Ext)	Cracking	ASME Section XI Inservice Inspection, Subsections IWB, IWC, and IWD (B2.1.1)	IV.C2-16	3.1.1.61	A

Notes for Table 3.1.2-3:

Standard Notes:

A Consistent with NUREG-1801 item for component, material, environment, and aging effect. AMP is consistent with NUREG-1801 AMP.

B Consistent with NUREG-1801 item for component, material, environment, and aging effect. AMP takes some exceptions to NUREG-1801 AMP.

E Consistent with NUREG-1801 for material, environment, and aging effect, but a different aging management program is credited or NUREG-1801 identifies a plant-specific aging management program.

G Environment not in NUREG-1801 for this component and material.

Plant Specific Notes:

1 NUREG-1801 does not address the aging of nickel-alloys in borated water leakage. Nickel-alloys subject to an air with borated water leakage environment are similar to stainless steel in a borated water leakage environment and do not experience aging effects due to borated water leakage.

2 The inspection requirements of ASME Code Case N-722 do not apply to components with pressure retaining welds fabricated with Alloy 600/82/182 that have been mitigated by weld overlay.

Table 3.1.2-4 Reactor Vessel, Internals, and Reactor Coolant System – Summary of Aging Management Evaluation – Steam Generators

Component Type	Intended Function	Material	Environment	Aging Effect Requiring Management	Aging Management Program	NUREG-1801 Vol. 2 Item	Table 1 Item	Notes
SG Closure Bolting	PB	Carbon Steel	Borated Water Leakage (Ext)	Loss of material	Boric Acid Corrosion (B2.1.4)	IV.D1-3	3.1.1.58	A
SG Closure Bolting	PB	Carbon Steel	Borated Water Leakage (Ext)	Loss of preload	Bolting Integrity (B2.1.7)	IV.D1-10	3.1.1.52	B
SG Closure Bolting	PB	Carbon Steel	Plant Indoor Air (Ext)	Loss of material	Bolting Integrity (B2.1.7)	V.E-4	3.2.1.23	B
SG Closure Bolting	PB	Carbon Steel	Plant Indoor Air (Ext)	Loss of preload	Bolting Integrity (B2.1.7)	V.E-5	3.2.1.24	B
SG Feedwater Ring	DF	Carbon Steel	Secondary Water (Ext)	Loss of material	Steam Generator Tubing Integrity (B2.1.8) and Water Chemistry (B2.1.2)	IV.D1-9	3.1.1.76	C
SG Feedwater Ring	DF	Carbon Steel	Secondary Water (Ext)	Wall thinning	Steam Generator Tubing Integrity (B2.1.8) and Water Chemistry (B2.1.2)	IV.D1-26	3.1.1.32	E, 1
SG Feedwater Ring	DF	Nickel-alloys	Secondary Water (Ext)	Cracking	Steam Generator Tubing Integrity (B2.1.8) and Water Chemistry (B2.1.2)	IV.D1-14	3.1.1.74	C
SG Feedwater Ring	DF	Nickel-alloys	Secondary Water (Ext)	Loss of material	Steam Generator Tubing Integrity (B2.1.8) and Water Chemistry (B2.1.2)	IV.D1-15	3.1.1.74	C

Table 3.1.2-4 Reactor Vessel, Internals, and Reactor Coolant System – Summary of Aging Management Evaluation – Steam Generators (Continued)

Component Type	Intended Function	Material	Environment	Aging Effect Requiring Management	Aging Management Program	NUREG-1801 Vol. 2 Item	Table 1 Item	Notes
SG Feedwater Ring	DF	Nickel-alloys	Secondary Water (Int)	Cracking	Steam Generator Tubing Integrity (B2.1.8) and Water Chemistry (B2.1.2)	IV.D1-14	3.1.1.74	C
SG Feedwater Ring	DF	Nickel-alloys	Secondary Water (Int)	Loss of material	Steam Generator Tubing Integrity (B2.1.8) and Water Chemistry (B2.1.2)	IV.D1-15	3.1.1.74	C
SG Internal Structures	DF, SS	Carbon Steel	Secondary Water (Ext)	Loss of material	Steam Generator Tubing Integrity (B2.1.8) and Water Chemistry (B2.1.2)	IV.D1-9	3.1.1.76	C
SG Internal Structures	SS	Stainless Steel	Secondary Water (Ext)	Cracking	Steam Generator Tubing Integrity (B2.1.8) and Water Chemistry (B2.1.2)	IV.D1-14	3.1.1.74	A
SG Internal Structures	SS	Stainless Steel	Secondary Water (Ext)	Loss of material	Steam Generator Tubing Integrity (B2.1.8) and Water Chemistry (B2.1.2)	IV.D1-15	3.1.1.74	A
SG Primary Head and Divider Plate	PB	Carbon Steel	Secondary Water (Ext)	Loss of material	Steam Generator Tubing Integrity (B2.1.8) and Water Chemistry (B2.1.2)	IV.D1-9	3.1.1.76	C

Table 3.1.2-4 Reactor Vessel, Internals, and Reactor Coolant System – Summary of Aging Management Evaluation – Steam Generators (Continued)

Component Type	Intended Function	Material	Environment	Aging Effect Requiring Management	Aging Management Program	NUREG-1801 Vol. 2 Item	Table 1 Item	Notes
SG Primary Head and Divider Plate	PB	Carbon Steel with Stainless Steel Cladding	Borated Water Leakage (Ext)	Loss of material	Boric Acid Corrosion (B2.1.4)	IV.D1-3	3.1.1.58	A
SG Primary Head and Divider Plate	PB	Carbon Steel with Stainless Steel Cladding	Reactor Coolant (Int)	Cracking	ASME Section XI Inservice Inspection, Subsections IWB, IWC, and IWD for Class 1 components (B2.1.1) and Water Chemistry (B2.1.2)	IV.D1-1	3.1.1.68	C
SG Primary Head and Divider Plate	PB	Carbon Steel with Stainless Steel Cladding	Reactor Coolant (Int)	Cumulative fatigue damage	Time-Limited Aging Analysis evaluated for the period of extended operation	IV.D1-8	3.1.1.10	A
SG Primary Head and Divider Plate	PB	Nickel-alloys	Reactor Coolant (Ext)	Cracking	Water Chemistry (B2.1.2)	IV.D1-6	3.1.1.81	A
SG Primary Manway Covers	PB	Carbon Steel	Borated Water Leakage (Ext)	Loss of material	Boric Acid Corrosion (B2.1.4)	IV.D1-3	3.1.1.58	A

Table 3.1.2-4 Reactor Vessel, Internals, and Reactor Coolant System – Summary of Aging Management Evaluation – Steam Generators (Continued)

Component Type	Intended Function	Material	Environment	Aging Effect Requiring Management	Aging Management Program	NUREG-1801 Vol. 2 Item	Table 1 Item	Notes
SG Primary Manway Covers	PB	Stainless Steel	Reactor Coolant (Ext)	Cracking	ASME Section XI Inservice Inspection, Subsections IWB, IWC, and IWD for Class 1 components (B2.1.1) and Water Chemistry (B2.1.2)	IV.D1-1	3.1.1.68	A
SG Primary Nozzles and Safe Ends	PB	Carbon Steel with Stainless Steel Cladding	Borated Water Leakage (Ext)	Loss of material	Boric Acid Corrosion (B2.1.4)	IV.D1-3	3.1.1.58	A
SG Primary Nozzles and Safe Ends	PB	Carbon Steel with Stainless Steel Cladding	Reactor Coolant (Int)	Cracking	ASME Section XI Inservice Inspection, Subsections IWB, IWC, and IWD for Class 1 components (B2.1.1) and Water Chemistry (B2.1.2)	IV.D1-1	3.1.1.68	A
SG Primary Nozzles and Safe Ends	PB	Carbon Steel with Stainless Steel Cladding	Reactor Coolant (Int)	Cumulative fatigue damage	Time-Limited Aging Analysis evaluated for the period of extended operation	IV.D1-8	3.1.1.10	A

Table 3.1.2-4 Reactor Vessel, Internals, and Reactor Coolant System – Summary of Aging Management Evaluation – Steam Generators (Continued)

Component Type	Intended Function	Material	Environment	Aging Effect Requiring Management	Aging Management Program	NUREG-1801 Vol. 2 Item	Table 1 Item	Notes
SG Primary Nozzles and Safe Ends	PB	Nickel-alloys	Borated Water Leakage (Ext)	None	None	None	None	G, 3
SG Primary Nozzles and Safe Ends	PB	Nickel-alloys	Reactor Coolant (Int)	Cracking	ASME Section XI Inservice Inspection, Subsections IWB, IWC, and IWD for Class 1 components (B2.1.1) and Water Chemistry (B2.1.2)	IV.D1-4	3.1.1.31	E, 2
SG Primary Nozzles and Safe Ends	PB	Nickel-alloys	Reactor Coolant (Int)	Cumulative fatigue damage	Time-Limited Aging Analysis evaluated for the period of extended operation	IV.D1-8	3.1.1.10	A
SG Primary Nozzles and Safe Ends	PB	Stainless Steel	Borated Water Leakage (Ext)	None	None	IV.E-3	3.1.1.86	A
SG Primary Nozzles and Safe Ends	PB	Stainless Steel	Reactor Coolant (Int)	Cracking	ASME Section XI Inservice Inspection, Subsections IWB, IWC, and IWD for Class 1 components (B2.1.1) and Water Chemistry (B2.1.2)	IV.D1-1	3.1.1.68	A

Table 3.1.2-4 Reactor Vessel, Internals, and Reactor Coolant System – Summary of Aging Management Evaluation – Steam Generators (Continued)

Component Type	Intended Function	Material	Environment	Aging Effect Requiring Management	Aging Management Program	NUREG-1801 Vol. 2 Item	Table 1 Item	Notes
SG Primary Nozzles and Safe Ends	PB	Stainless Steel	Reactor Coolant (Int)	Cumulative fatigue damage	Time-Limited Aging Analysis evaluated for the period of extended operation	IV.D1-8	3.1.1.10	A
SG Secondary Manway and Handhole Covers	PB	Carbon Steel	Plant Indoor Air (Ext)	Loss of material	External Surfaces Monitoring Program (B2.1.20)	V.E-7	3.2.1.31	B
SG Secondary Manway and Handhole Covers	PB	Nickel-alloys	Secondary Water (Ext)	Cracking	Steam Generator Tubing Integrity (B2.1.8) and Water Chemistry (B2.1.2)	IV.D1-14	3.1.1.74	C
SG Secondary Manway and Handhole Covers	PB	Nickel-alloys	Secondary Water (Ext)	Loss of material	Steam Generator Tubing Integrity (B2.1.8) and Water Chemistry (B2.1.2)	IV.D1-15	3.1.1.74	C
SG Secondary Nozzles and Safe Ends	PB	Carbon Steel	Plant Indoor Air (Ext)	Loss of material	External Surfaces Monitoring Program (B2.1.20)	V.E-7	3.2.1.31	B
SG Secondary Nozzles and Safe Ends	PB	Carbon Steel	Secondary Water (Int)	Wall thinning	Flow-Accelerated Corrosion (B2.1.6)	IV.D1-5	3.1.1.59	B
SG Secondary Nozzles and Safe Ends	PB	Carbon Steel	Secondary Water (Int)	Cumulative fatigue damage	Time-Limited Aging Analysis evaluated for the period of extended operation	IV.D1-11	3.1.1.07	A

Table 3.1.2-4 Reactor Vessel, Internals, and Reactor Coolant System – Summary of Aging Management Evaluation – Steam Generators (Continued)

Component Type	Intended Function	Material	Environment	Aging Effect Requiring Management	Aging Management Program	NUREG-1801 Vol. 2 Item	Table 1 Item	Notes
SG Secondary Nozzles and Safe Ends	PB	Carbon Steel	Secondary Water (Int)	Loss of material	ASME Section XI Inservice Inspection, Subsections IWB, IWC, and IWD for Class 2 components (B2.1.1) and Water Chemistry (B2.1.2)	IV.D1-12	3.1.1.16	C
SG Secondary Nozzles and Safe Ends	PB, SH	Nickel-alloys	Secondary Water (Ext)	Cracking	Steam Generator Tubing Integrity (B2.1.8) and Water Chemistry (B2.1.2)	IV.D1-14	3.1.1.74	C
SG Secondary Nozzles and Safe Ends	PB, SH	Nickel-alloys	Secondary Water (Ext)	Loss of material	Steam Generator Tubing Integrity (B2.1.8) and Water Chemistry (B2.1.2)	IV.D1-15	3.1.1.74	C
SG Secondary Shell	PB	Carbon Steel	Plant Indoor Air (Ext)	Loss of material	External Surfaces Monitoring Program (B2.1.20)	V.E-7	3.2.1.31	B
SG Secondary Shell	PB	Carbon Steel	Secondary Water (Int)	Wall thinning	Flow-Accelerated Corrosion (B2.1.6)	IV.D1-5	3.1.1.59	D
SG Secondary Shell	PB	Carbon Steel	Secondary Water (Int)	Cumulative fatigue damage	Time-Limited Aging Analysis evaluated for the period of extended operation	IV.D1-11	3.1.1.07	A

Table 3.1.2-4 Reactor Vessel, Internals, and Reactor Coolant System – Summary of Aging Management Evaluation – Steam Generators (Continued)

Component Type	Intended Function	Material	Environment	Aging Effect Requiring Management	Aging Management Program	NUREG-1801 Vol. 2 Item	Table 1 Item	Notes
SG Secondary Shell	PB	Carbon Steel	Secondary Water (Int)	Loss of material	ASME Section XI Inservice Inspection, Subsections IWB, IWC, and IWD for Class 2 components (B2.1.1) and Water Chemistry (B2.1.2)	IV.D1-12	3.1.1.16	A
SG Separators	DF, SS	Carbon Steel	Secondary Water (Ext)	Loss of material	Steam Generator Tubing Integrity (B2.1.8) and Water Chemistry (B2.1.2)	IV.D1-9	3.1.1.76	C
SG Separators	DF, SS	Carbon Steel	Secondary Water (Ext)	Wall thinning	Steam Generator Tubing Integrity (B2.1.8) and Water Chemistry (B2.1.2)	IV.D1-26	3.1.1.32	E
SG Tube Plugs	PB	Nickel-alloys	Reactor Coolant (Ext)	Cracking	Steam Generator Tubing Integrity (B2.1.8) and Water Chemistry (B2.1.2)	IV.D1-18	3.1.1.73	A
SG Tube Support Plates	SS	Carbon Steel	Secondary Water (Ext)	Loss of material	Steam Generator Tubing Integrity (B2.1.8) and Water Chemistry (B2.1.2)	IV.D1-9	3.1.1.76	C

Table 3.1.2-4 Reactor Vessel, Internals, and Reactor Coolant System – Summary of Aging Management Evaluation – Steam Generators (Continued)

Component Type	Intended Function	Material	Environment	Aging Effect Requiring Management	Aging Management Program	NUREG-1801 Vol. 2 Item	Table 1 Item	Notes
SG Tube Support Plates	SS	Nickel-alloys	Secondary Water (Ext)	Loss of material	Steam Generator Tubing Integrity (B2.1.8) and Water Chemistry (B2.1.2)	IV.D1-15	3.1.1.74	C
SG Tube Support Plates	SS	Stainless Steel	Secondary Water (Ext)	Cracking	Steam Generator Tubing Integrity (B2.1.8) and Water Chemistry (B2.1.2)	IV.D1-14	3.1.1.74	C
SG Tube Support Plates	SS	Stainless Steel	Secondary Water (Ext)	Loss of material	Steam Generator Tubing Integrity (B2.1.8) and Water Chemistry (B2.1.2)	IV.D1-15	3.1.1.74	C
SG Tubes	HT, PB	Nickel-alloys	Reactor Coolant (Int)	Cracking	Steam Generator Tubing Integrity (B2.1.8) and Water Chemistry (B2.1.2)	IV.D1-20	3.1.1.73	A
SG Tubes	HT, PB	Nickel-alloys	Secondary Water (Ext)	Cracking	Steam Generator Tubing Integrity (B2.1.8) and Water Chemistry (B2.1.2)	IV.D1-22	3.1.1.72	A
SG Tubes	HT, PB	Nickel-alloys	Secondary Water (Ext)	Cracking	Steam Generator Tubing Integrity (B2.1.8) and Water Chemistry (B2.1.2)	IV.D1-23	3.1.1.72	A

Table 3.1.2-4 Reactor Vessel, Internals, and Reactor Coolant System – Summary of Aging Management Evaluation – Steam Generators (Continued)

Component Type	Intended Function	Material	Environment	Aging Effect Requiring Management	Aging Management Program	NUREG-1801 Vol. 2 Item	Table 1 Item	Notes
SG Tubes	HT, PB	Nickel-alloys	Secondary Water (Ext)	Loss of material	Steam Generator Tubing Integrity (B2.1.8) and Water Chemistry (B2.1.2)	IV.D1-24	3.1.1.72	A

Notes for Table 3.1.2-4:

Standard Notes:

A Consistent with NUREG-1801 item for component, material, environment, and aging effect. AMP is consistent with NUREG-1801 AMP.

B Consistent with NUREG-1801 item for component, material, environment, and aging effect. AMP takes some exceptions to NUREG-1801 AMP.

C Component is different, but consistent with NUREG-1801 item for material, environment, and aging effect. AMP is consistent with NUREG-1801 AMP.

D Component is different, but consistent with NUREG-1801 item for material, environment, and aging effect. AMP takes some exceptions to NUREG-1801 AMP.

E Consistent with NUREG-1801 for material, environment, and aging effect, but a different aging management program is credited or NUREG-1801 identifies a plant-specific aging management program.

G Environment not in NUREG-1801 for this component and material.

Plant Specific Notes:

1 Feedring wall thinning was described in NRC Information Notice 91-19. This form of degradation has been detected only in certain Combustion Engineering pre-System 80 steam generators. The DCPP replacement steam generators are Westinghouse Model 54. No operating experience at DCPP or other units with Westinghouse Model 54 steam generators suggests that wall thinning of the feedrings is occurring; therefore DCPP has determined this condition is not applicable and no further evaluation is required.

2 Steam generator primary nozzle safe end welds are made of Alloy 690. The inspections will be implemented by ISI program that incorporated ASME Code Case N-722.

3 NUREG-1801 does not address the aging of nickel-alloys in borated water leakage. Nickel-alloys subject to an air with borated water leakage environment are similar to stainless steel in a borated water leakage environment and do not experience aging effects due to borated water leakage.

3.2 AGING MANAGEMENT OF ENGINEERED SAFETY FEATURES

3.2.1 Introduction

Section 3.2 provides the results of the aging management reviews (AMRs) for those component types identified in Section 2.3.2, Engineered Safety Features, subject to AMR. These systems are described in the following sections:

- Safety Injection System (Section 2.3.2.1)
- Containment Spray System (Section 2.3.2.2)
- Residual Heat Removal System (Section 2.3.2.3)
- Containment HVAC System (Section 2.3.2.4)

Table 3.2.1, Summary of Aging Management Evaluations in Chapter V of NUREG-1801 for Engineered Safety Features, provides the summary of the programs evaluated in NUREG-1801 that are applicable to the component types in this section. Table 3.2.1 uses the format of Table 1 described in Section 3.0.

3.2.2 Results

The following tables summarize the results of the AMR for the systems in the Engineered Safety Features area:

- Table 3.2.2-1, Engineered Safety Features – Summary of Aging Management Evaluation – Safety Injection System
- Table 3.2.2-2, Engineered Safety Features – Summary of Aging Management Evaluation – Containment Spray System
- Table 3.2.2-3, Engineered Safety Features – Summary of Aging Management Evaluation – Residual Heat Removal System
- Table 3.2.2-4, Engineered Safety Features – Summary of Aging Management Evaluation – Containment HVAC System

These tables use the format of Table 2 discussed in Section 3.0.

3.2.2.1 Materials, Environments, Aging Effects Requiring Management and Aging Management Programs

The materials from which the component types are fabricated, the environments to which they are exposed, the potential aging effects requiring management, and the aging management programs used to manage these aging effects are provided for each of the above systems in the following subsections.

3.2.2.1.1 Safety Injection System

Materials

The materials of construction for the safety injection system component types are:

- Carbon Steel
- Carbon Steel with Stainless Steel Cladding
- Cast Iron
- Copper Alloy (> 15 percent Zinc)
- Glass
- Stainless Steel
- Stainless Steel Cast Austenitic

Environment

The safety injection system components are exposed to the following environments:

- Borated Water Leakage
- Closed-Cycle Cooling Water
- Demineralized Water
- Dry Gas
- Encased in Concrete
- Lubricating Oil
- Plant Indoor Air
- Reactor Coolant
- Treated Borated Water

Aging Effects Requiring Management

The following safety injection system aging effects require management:

- Cracking
- Loss of fracture toughness
- Loss of material
- Loss of preload
- Reduction of heat transfer

Aging Management Programs

The following aging management programs manage the aging effects for the safety injection system component types:

- ASME Section XI Inservice Inspection, Subsections IWB, IWC, and IWD (B2.1.1)
- Bolting Integrity (B2.1.7)
- Boric Acid Corrosion (B2.1.4)
- Closed-Cycle Cooling Water System (B2.1.10)
- External Surfaces Monitoring Program (B2.1.20)
- Inspection of Internal Surfaces In Miscellaneous Piping And Ducting Components (B2.1.22)
- Lubricating Oil Analysis (B2.1.23)
- One-Time Inspection (B2.1.16)
- One-Time Inspection of ASME Code Class 1 Small-Bore Piping (B2.1.19)
- Selective Leaching of Materials (B2.1.17)
- Water Chemistry (B2.1.2)

3.2.2.1.2 Containment Spray System

Materials

The materials of construction for the containment spray system component types are:

- Carbon Steel
- Copper Alloy
- Stainless Steel

Environment

The containment spray system component types are exposed to the following environments:

- Borated Water Leakage
- Demineralized Water
- Dry Gas
- Plant Indoor Air
- Sodium Hydroxide
- Treated Borated Water

Aging Effects Requiring Management

The following containment spray system aging effects require management:

- Loss of material
- Loss of preload

Aging Management Programs

The following aging management programs manage the aging effects for the containment spray system component types:

- Bolting Integrity (B2.1.7)
- Boric Acid Corrosion (B2.1.4)
- Inspection of Internal Surfaces in Miscellaneous Piping and Ducting Components (B2.1.22)
- One-Time Inspection (B2.1.16)
- Water Chemistry (B2.1.2)

3.2.2.1.3 Residual Heat Removal System

Materials

The materials of construction for the residual heat removal system component types is:

- Carbon Steel
- Carbon Steel with Stainless Steel Cladding
- Stainless Steel
- Stainless Steel Cast Austenitic

Environment

The residual heat removal system component types are exposed to the following environments:

- Borated Water Leakage
- Closed-Cycle Cooling Water
- Demineralized Water
- Plant Indoor Air
- Reactor Coolant
- Treated Borated Water

Aging Effects Requiring Management

The following residual heat removal system aging effects require management:

- Cracking
- Loss of material
- Loss of preload
- Reduction of heat transfer

Aging Management Programs

The following aging management programs manage the aging effects for the residual heat removal system component types:

- ASME Section XI Inservice Inspection, Subsections IWB, IWC, and IWD (B2.1.1)

- Bolting Integrity (B2.1.7)
- Boric Acid Corrosion (B2.1.4)
- Closed-Cycle Cooling Water System (B2.1.10)
- External Surfaces Monitoring Program (B2.1.20)
- Inspection of Internal Surfaces in Miscellaneous Piping and Ducting Components (B2.1.22)
- One-Time Inspection (B2.1.16)
- Water Chemistry (B2.1.2)

3.2.2.1.4 Containment HVAC System

Materials

The materials of construction for the containment HVAC system component types are:

- Aluminum
- Carbon Steel
- Carbon Steel (Galvanized)
- Cast Iron (Gray Cast Iron)
- Copper Alloy
- Copper Alloy (> 15 percent Zinc)
- Elastomer
- Stainless Steel
- Stainless Steel Cast Austenitic

Environment

The containment HVAC system components are exposed to the following environments:

- Closed-Cycle Cooling Water
- Dry Gas
- Plant Indoor Air
- Raw Water

- Secondary Water
- Ventilation Atmosphere

Aging Effects Requiring Management

The following containment HVAC system aging effects require management:

- Hardening and loss of strength
- Loss of material
- Loss of preload
- Reduction of heat transfer

Aging Management Programs

The following aging management programs manage the aging effects for the containment HVAC system component types:

- Bolting Integrity (B2.1.7)
- Closed-Cycle Cooling Water System (B2.1.10)
- External Surfaces Monitoring Program (B2.1.20)
- Inspection of Internal Surfaces in Miscellaneous Piping and Ducting Components (B2.1.22)
- One-Time Inspection (B2.1.16)
- Selective Leaching of Materials (B2.1.17)
- Water Chemistry (B2.1.2)

3.2.2.2 Further Evaluation of Aging Management as Recommended by NUREG-1801

NUREG-1801 provides the basis for identifying those programs that warrant further evaluation. For the engineered safety features, those evaluations are addressed in the following subsections.

3.2.2.2.1 Cumulative Fatigue Damage

Cumulative fatigue damage of engineered safety features piping is a TLAA as defined in 10 CFR 54.3. TLAAs are evaluated in accordance with 10 CFR 54.21(c)(1).

Engineered safety features piping is designed to ASME III Class 2, Class 3, and ANSI B31.1, all of which require a reduction in the allowable secondary stress range if more than 7,000 full-range thermal cycles are expected in a design lifetime. Section 4.3.5 describes the evaluation of these cyclic design TLAAs.

3.2.2.2.2 Loss of material due to Cladding Breach

Not applicable. DCPP has no in-scope steel with stainless steel cladding pump casing exposed to treated borated water in the emergency core cooling system, so the applicable NUREG-1801 line was not used.

3.2.2.2.3 Loss of Material due to Pitting and Crevice Corrosion

3.2.2.2.3.1 Internal surfaces of stainless steel containment isolation piping and components exposed to treated water

The Water Chemistry program (B2.1.2) and the One-Time Inspection program (B2.1.16) manages loss of material due to pitting and crevice corrosion for stainless steel components exposed to demineralized water. The One-Time Inspection program (B2.1.16) includes selected components at susceptible locations where contaminants could accumulate (e.g. stagnant flow locations).

3.2.2.2.3.2 Stainless steel piping and components exposed to soil

Not applicable. DCPP has no in-scope stainless steel piping, piping components, and piping elements exposed to soil in the emergency core cooling system, so the applicable NUREG-1801 line was not used.

3.2.2.2.3.3 BWR stainless steel and aluminum piping and components exposed to treated water

Not applicable to DCPP, applicable to BWR only.

3.2.2.2.3.4 Stainless steel and copper piping and components exposed to lubricating oil

The Lubricating Oil Analysis program (B2.1.23) and the One-Time Inspection program (B2.1.16) manages loss of material due to pitting and crevice corrosion for copper alloys and stainless steel components exposed to lubricating oil. The One-Time Inspection program (B2.1.16) will include selected components at susceptible locations where contaminants such as water could accumulate.

3.2.2.2.3.5 Partially encased stainless steel tanks exposed to raw water

Not applicable. DCPP has no stainless steel tanks with a moisture barrier configuration exposed to raw water in the emergency core cooling system, so the applicable NUREG-1801 line was not used.

3.2.2.2.3.6 Stainless steel piping, components, and tanks exposed to internal condensation

The Inspection of Internal Surfaces in Miscellaneous Piping and Ducting Components program (B2.1.22) manages the loss of material from pitting and crevice corrosion for stainless steel (including CASS) internal surfaces exposed to condensation environment.

3.2.2.2.4 Reduction of Heat Transfer due to Fouling

3.2.2.2.4.1 Stainless steel and copper heat exchanger tubes exposed to lubricating oil

The Lubricating Oil Analysis program (B2.1.23) and the One-Time Inspection program (B2.1.16) manages reduction of heat transfer due to fouling for copper alloy heat exchanger tubes exposed to lubricating oil. The One-Time Inspection program (B2.1.16) includes selected components at susceptible locations where contaminants such as water could accumulate.

3.2.2.2.4.2 Stainless steel heat exchanger tubes exposed to treated water

Not applicable. DCPP has no in-scope stainless steel heat exchanger tubes exposed to treated water in the containment spray system, so the applicable NUREG-1801 line was not used.

3.2.2.2.5 Hardening and Loss of Strength due to Elastomer Degradation

Not applicable to DCPP, applicable to BWR only.

3.2.2.2.6 Loss of Material due to Erosion

Not applicable. DCPP does not use the high-pressure safety injection pumps for normal charging and the aging effect due to erosion is not applicable, so the subject NUREG-1801 line was not used.

3.2.2.2.7 Loss of Material due to General Corrosion and Fouling

Not applicable to DCPP, applicable to BWR only.

3.2.2.2.8 Loss of Material due to General, Pitting, and Crevice Corrosion

3.2.2.2.8.1 BWR piping and components exposed to treated water

Not applicable to DCPP, applicable to BWR only.

3.2.2.2.8.2 Internal surfaces of containment isolation piping and components exposed to treated water

The Water Chemistry program (B2.1.2) and the One-Time Inspection program (B2.1.16) manages loss of material due to general, pitting and crevice corrosion for carbon steel components exposed to demineralized water. The One-Time Inspection program (B2.1.16) will include selected components at susceptible locations where contaminants could accumulate (e.g. stagnant flow locations).

3.2.2.2.8.3 Steel piping and components exposed to lubricating oil

The Lubricating Oil Analysis program (B2.1.23) and the One-Time Inspection program (B2.1.16) manages loss of material due to general, pitting, and crevice corrosion for carbon steel (including cast iron) components exposed to lubricating oil. The One-Time Inspection Program (B2.1.16) will include selected components at susceptible locations where contaminants such as water could accumulate.

3.2.2.2.9 Loss of Material due to General, Pitting, Crevice, and Microbiologically-Influenced Corrosion (MIC)

Not applicable to DCPP, applicable to BWR only.

3.2.2.2.10 Quality Assurance for Aging Management of Nonsafety-Related Components

Quality Assurance Program and Administrative Controls are discussed in Section B1.3.

3.2.2.3 Time-Limited Aging Analysis

The Time-Limited Aging Analyses identified below are associated with the engineered safety features component types. The section of Chapter 4 that contains the TLAA review results is indicated in parenthesis.

- Cumulative Fatigue Damage (Section 4.3, Metal Fatigue Analysis)

3.2.3 Conclusions

The engineered safety features component types that are subject to AMR have been evaluated. The aging management programs selected to manage the aging effects for the engineered safety features component types are identified in the summary Tables and in Section 3.2.2.1.

A description of these aging management programs is provided in Appendix B, along with a demonstration that the identified aging effects will be managed for the period of extended operation.

Therefore, based on the demonstration provided in Appendix B, the effects of aging associated with the engineered safety features component types will be adequately managed so that there is reasonable assurance that the intended functions will be maintained consistent with the current licensing basis during the period of extended operation.

Table 3.2.1 Summary of Aging Management Evaluations in Chapter V of NUREG-1801 for Engineered Safety Features

Item Number	Component Type	Aging Effect / Mechanism	Aging Management Program	Further Evaluation Recommended	Discussion
3.2.1.01	Steel and stainless steel piping, piping components, and piping elements in emergency core cooling system	Cumulative fatigue damage	TLAA, evaluated in accordance with 10 CFR 54.21(c)	Yes, TLAA	Fatigue of metal components is a TLAA. See further evaluation in Section 3.2.2.2.1.
3.2.1.02	Steel with stainless steel cladding pump casing exposed to treated borated water	Loss of material due to cladding breach	A plant-specific aging management program is to be evaluated. Reference NRC Information Notice 94-63, “Boric Acid Corrosion of Charging Pump Casings Caused by Cladding Cracks"	Yes	Not applicable. DCPP has no in-scope steel with stainless steel cladding pump casing exposed to treated borated water in the emergency core cooling system, so the applicable NUREG-1801 line was not used. See further evaluation in Section 3.2.2.2.2.
3.2.1.03	Stainless steel containment isolation piping and components internal surfaces exposed to treated water	Loss of material due to pitting and crevice corrosion	Water Chemistry (B2.1.2) and One-Time Inspection (B2.1.16)	Yes	Consistent with NUREG-1801. See further evaluation in Section 3.2.2.2.3.1.

Table 3.2.1 Summary of Aging Management Evaluations in Chapter V of NUREG-1801 for Engineered Safety Features (Continued)

Item Number	Component Type	Aging Effect / Mechanism	Aging Management Program	Further Evaluation Recommended	Discussion
3.2.1.04	Stainless steel piping, piping components, and piping elements exposed to soil	Loss of material due to pitting and crevice corrosion	A plant-specific aging management program is to be evaluated.	Yes	Not applicable. DCPP has no in-scope stainless steel piping, piping components, and piping elements exposed to soil in the emergency core cooling system, so the applicable NUREG-1801 line was not used. See further evaluation in Section 3.2.2.2.3.2.
3.2.1.05					Not applicable - BWR only
3.2.1.06	Stainless steel and copper alloy piping, piping components, and piping elements exposed to lubricating oil	Loss of material due to pitting and crevice corrosion	Lubricating Oil Analysis (B2.1.23) and One-Time Inspection (B2.1.16)	Yes	Consistent with NUREG-1801 with aging management program exceptions. The aging management program(s) with exceptions to NUREG-1801 include: Lubricating Oil Analysis (B2.1.23). See further evaluation in Section 3.2.2.2.3.4.

Table 3.2.1 Summary of Aging Management Evaluations in Chapter V of NUREG-1801 for Engineered Safety Features (Continued)

Item Number	Component Type	Aging Effect / Mechanism	Aging Management Program	Further Evaluation Recommended	Discussion
3.2.1.07	Partially encased stainless steel tanks with breached moisture barrier exposed to raw water	Loss of material due to pitting and crevice corrosion	A plant-specific aging management program is to be evaluated for pitting and crevice corrosion of tank bottoms because moisture and water can egress under the tank due to cracking of the perimeter seal from weathering.	Yes	Not applicable. DCPP has no stainless steel tanks with a moisture barrier configuration exposed to raw water in the emergency core cooling system, so the applicable NUREG-1801 line was not used. See further evaluation in Section 3.2.2.2.3.5.
3.2.1.08	Stainless steel piping, piping components, piping elements, and tank internal surfaces exposed to condensation (internal)	Loss of material due to pitting and crevice corrosion	A plant-specific aging management program is to be evaluated.	Yes	Consistent with NUREG-1801. The plant-specific aging management program(s) used to manage the aging include: Inspection of Internal Surfaces In Miscellaneous Piping And Ducting Components (B2.1.22). See further evaluation in Section 3.2.2.2.3.6.

Table 3.2.1 Summary of Aging Management Evaluations in Chapter V of NUREG-1801 for Engineered Safety Features (Continued)

Item Number	Component Type	Aging Effect / Mechanism	Aging Management Program	Further Evaluation Recommended	Discussion
3.2.1.09	Steel, stainless steel, and copper alloy heat exchanger tubes exposed to lubricating oil	Reduction of heat transfer due to fouling	Lubricating Oil Analysis (B2.1.23) and One-Time Inspection (B2.1.16)	Yes	Consistent with NUREG-1801 with aging management program exceptions. The aging management program(s) with exceptions to NUREG-1801 include: Lubricating Oil Analysis (B2.1.23). See further evaluation in Section 3.2.2.2.4.1.
3.2.1.10	Stainless steel heat exchanger tubes exposed to treated water	Reduction of heat transfer due to fouling	Water Chemistry (B2.1.2) and One-Time Inspection (B2.1.16)	Yes	Not applicable. DCPP has no in-scope stainless steel heat exchanger tubes exposed to treated water in the containment spray system, so the applicable NUREG-1801 line was not used. See further evaluation in Section 3.2.2.2.4.2.
3.2.1.11					Not applicable - BWR only

Table 3.2.1 Summary of Aging Management Evaluations in Chapter V of NUREG-1801 for Engineered Safety Features (Continued)

Item Number	Component Type	Aging Effect / Mechanism	Aging Management Program	Further Evaluation Recommended	Discussion
3.2.1.12	Stainless steel high-pressure safety injection (charging) pump miniflow orifice exposed to treated borated water	Loss of material due to erosion	A plant-specific aging management program is to be evaluated for erosion of the orifice due to extended use of the centrifugal HPSI pump for normal charging.	Yes	Not applicable. DCPP does not use the high-pressure safety injection pumps for normal charging and the aging effect due to erosion is not applicable, so the subject NUREG-1801 line was not used. See further evaluation in Section 3.2.2.2.6.
3.2.1.13					Not applicable - BWR only
3.2.1.14					Not applicable - BWR only
3.2.1.15	Steel containment isolation piping, piping components, and piping elements internal surfaces exposed to treated water	Loss of material due to general, pitting, and crevice corrosion	Water Chemistry (B2.1.2) and One-Time Inspection (B2.1.16)	Yes	Consistent with NUREG-1801. See further evaluation in Section 3.2.2.2.8.2.

Table 3.2.1 Summary of Aging Management Evaluations in Chapter V of NUREG-1801 for Engineered Safety Features (Continued)

Item Number	Component Type	Aging Effect / Mechanism	Aging Management Program	Further Evaluation Recommended	Discussion
3.2.1.16	Steel piping, piping components, and piping elements exposed to lubricating oil	Loss of material due to general, pitting, and crevice corrosion	Lubricating Oil Analysis (B2.1.23) and One-Time Inspection (B2.1.16)	Yes	Consistent with NUREG-1801 with aging management program exceptions. The aging management program(s) with exceptions to NUREG-1801 include: Lubricating Oil Analysis (B2.1.23). See further evaluation in Section 3.2.2.2.8.3.
3.2.1.17					Not applicable - BWR only
3.2.1.18					Not applicable - BWR only
3.2.1.19					Not applicable - BWR only
3.2.1.20					Not applicable - BWR only
3.2.1.21	High-strength steel closure bolting exposed to air with steam or water leakage	Cracking due to cyclic loading, stress corrosion cracking	Bolting Integrity (B2.1.7)	No	Not applicable. DCPP has no in-scope high-strength steel closure bolting exposed to air with steam or water leakage in the engineered safety features systems, so the applicable NUREG-1801 line was not used.

Table 3.2.1 Summary of Aging Management Evaluations in Chapter V of NUREG-1801 for Engineered Safety Features (Continued)

Item Number	Component Type	Aging Effect / Mechanism	Aging Management Program	Further Evaluation Recommended	Discussion
3.2.1.22	Steel closure bolting exposed to air with steam or water leakage	Loss of material due to general corrosion	Bolting Integrity (B2.1.7)	No	Not applicable. DCPP has no in-scope steel closure bolting exposed to air with steam or water leakage in the engineered safety features systems, so the applicable NUREG-1801 line was not used.
3.2.1.23	Steel bolting and closure bolting exposed to air – outdoor (external), or air – indoor uncontrolled (external)	Loss of material due to general, pitting, and crevice corrosion	Bolting Integrity (B2.1.7)	No	Consistent with NUREG-1801 with aging management program exceptions. The aging management program(s) with exceptions to NUREG-1801 include: Bolting Integrity (B2.1.7)
3.2.1.24	Steel closure bolting exposed to air – indoor uncontrolled (external)	Loss of preload due to thermal effects, gasket creep, and self-loosening	Bolting Integrity (B2.1.7)	No	Consistent with NUREG-1801 with aging management program exceptions. The aging management program(s) with exceptions to NUREG-1801 include: Bolting Integrity (B2.1.7)

Table 3.2.1 Summary of Aging Management Evaluations in Chapter V of NUREG-1801 for Engineered Safety Features (Continued)

Item Number	Component Type	Aging Effect / Mechanism	Aging Management Program	Further Evaluation Recommended	Discussion
3.2.1.25	Stainless steel piping, piping components, and piping elements exposed to closed cycle cooling water >60° C (>140° F)	Cracking due to stress corrosion cracking	Closed-Cycle Cooling Water System (B2.1.10)	No	Consistent with NUREG-1801 with aging management program exceptions. The aging management program(s) with exceptions to NUREG-1801 include: Closed-Cycle Cooling Water System (B2.1.10)
3.2.1.26	Steel piping, piping components, and piping elements exposed to closed cycle cooling water	Loss of material due to general, pitting, and crevice corrosion	Closed-Cycle Cooling Water System (B2.1.10)	No	Consistent with NUREG-1801 with aging management program exceptions. The aging management program(s) with exceptions to NUREG-1801 include: Closed-Cycle Cooling Water System (B2.1.10)
3.2.1.27	Steel heat exchanger components exposed to closed cycle cooling water	Loss of material due to general, pitting, crevice, and galvanic corrosion	Closed-Cycle Cooling Water System (B2.1.10)	No	Consistent with NUREG-1801 with aging management program exceptions. The aging management program(s) with exceptions to NUREG-1801 include: Closed-Cycle Cooling Water System (B2.1.10)

Table 3.2.1 Summary of Aging Management Evaluations in Chapter V of NUREG-1801 for Engineered Safety Features (Continued)

Item Number	Component Type	Aging Effect / Mechanism	Aging Management Program	Further Evaluation Recommended	Discussion
3.2.1.28	Stainless steel piping, piping components, piping elements, and heat exchanger components exposed to closed-cycle cooling water	Loss of material due to pitting and crevice corrosion	Closed-Cycle Cooling Water System (B2.1.10)	No	Consistent with NUREG-1801 with aging management program exceptions. The aging management program(s) with exceptions to NUREG-1801 include: Closed-Cycle Cooling Water System (B2.1.10)
3.2.1.29	Copper alloy piping, piping components, piping elements, and heat exchanger components exposed to closed cycle cooling water	Loss of material due to pitting, crevice, and galvanic corrosion	Closed-Cycle Cooling Water System (B2.1.10)	No	Consistent with NUREG-1801 with aging management program exceptions. The aging management program(s) with exceptions to NUREG-1801 include: Closed-Cycle Cooling Water System (B2.1.10)
3.2.1.30	Stainless steel and copper alloy heat exchanger tubes exposed to closed cycle cooling water	Reduction of heat transfer due to fouling	Closed-Cycle Cooling Water System (B2.1.10)	No	Consistent with NUREG-1801 with aging management program exceptions. The aging management program(s) with exceptions to NUREG-1801 include: Closed-Cycle Cooling Water System (B2.1.10)

Table 3.2.1 Summary of Aging Management Evaluations in Chapter V of NUREG-1801 for Engineered Safety Features (Continued)

Item Number	Component Type	Aging Effect / Mechanism	Aging Management Program	Further Evaluation Recommended	Discussion
3.2.1.31	External surfaces of steel components including ducting, piping, ducting closure bolting, and containment isolation piping external surfaces exposed to air - indoor uncontrolled (external); condensation (external) and air - outdoor (external)	Loss of material due to general corrosion	External Surfaces Monitoring (B2.1.20)	No	Consistent with NUREG-1801 with aging management program exceptions. The aging management program(s) with exceptions to NUREG-1801 include: External Surfaces Monitoring Program (B2.1.20)
3.2.1.32	Steel piping and ducting components and internal surfaces exposed to air – indoor uncontrolled (Internal)	Loss of material due to general corrosion	Inspection of Internal Surfaces in Miscellaneous Piping and Ducting Components (B2.1.22)	No	Consistent with NUREG-1801 with aging management program exceptions. The aging management program(s) with exceptions to NUREG-1801 include: Inspection of Internal Surfaces In Miscellaneous Piping And Ducting Components (B2.1.22)

Table 3.2.1 Summary of Aging Management Evaluations in Chapter V of NUREG-1801 for Engineered Safety Features (Continued)

Item Number	Component Type	Aging Effect / Mechanism	Aging Management Program	Further Evaluation Recommended	Discussion
3.2.1.33	Steel encapsulation components exposed to air-indoor uncontrolled (internal)	Loss of material due to general, pitting, and crevice corrosion	Inspection of Internal Surfaces in Miscellaneous Piping and Ducting Components (B2.1.22)	No	Not applicable. DCPP has no in-scope steel encapsulation components exposed to air-indoor uncontrolled (internal) in the engineered safety features systems, so the applicable NUREG-1801 line was not used.
3.2.1.34	Steel piping, piping components, and piping elements exposed to condensation (internal)	Loss of material due to general, pitting, and crevice corrosion	Inspection of Internal Surfaces in Miscellaneous Piping and Ducting Components (B2.1.22)	No	Not applicable - BWR only
3.2.1.35	Steel containment isolation piping and components internal surfaces exposed to raw water	Loss of material due to general, pitting, crevice, and microbiologically-influenced corrosion, and fouling	Open-Cycle Cooling Water System (B2.1.9)	No	Not applicable. The containment isolation components were evaluated in the systems in which the components were found to have the function of containment integrity, so the applicable NUREG-1801 line was not used.

Table 3.2.1 Summary of Aging Management Evaluations in Chapter V of NUREG-1801 for Engineered Safety Features (Continued)

Item Number	Component Type	Aging Effect / Mechanism	Aging Management Program	Further Evaluation Recommended	Discussion
3.2.1.36	Steel heat exchanger components exposed to raw water	Loss of material due to general, pitting, crevice, galvanic, and microbiologically-influenced corrosion, and fouling	Open-Cycle Cooling Water System (B2.1.9)	No	Not applicable. DCPP has no in-scope steel heat exchanger components exposed to raw water in the engineered safety features systems, so the applicable NUREG-1801 lines were not used.
3.2.1.37	Stainless steel piping, piping components, and piping elements exposed to raw water	Loss of material due to pitting, crevice, and microbiologically-influenced corrosion	Open-Cycle Cooling Water System (B2.1.9)	No	Not applicable. DCPP has no in-scope stainless steel piping, piping components, and piping elements exposed to raw water in the emergency core cooling system, so the applicable NUREG-1801 line was not used.
3.2.1.38	Stainless steel containment isolation piping and components internal surfaces exposed to raw water	Loss of material due to pitting, crevice, and microbiologically-influenced corrosion, and fouling	Open-Cycle Cooling Water System (B2.1.9)	No	Not applicable. DCPP has no in-scope stainless steel components exposed to raw water in the engineered safety features systems, so the applicable NUREG-1801 line was not used.

Table 3.2.1 Summary of Aging Management Evaluations in Chapter V of NUREG-1801 for Engineered Safety Features (Continued)

Item Number	Component Type	Aging Effect / Mechanism	Aging Management Program	Further Evaluation Recommended	Discussion
3.2.1.39	Stainless steel heat exchanger components exposed to raw water	Loss of material due to pitting, crevice, and microbiologically-influenced corrosion, and fouling	Open-Cycle Cooling Water System (B2.1.9)	No	Not applicable. DCPP has no in-scope stainless steel heat exchanger components exposed to raw water in the engineered safety features systems, so the applicable NUREG-1801 lines were not used.
3.2.1.40	Steel and stainless steel heat exchanger tubes (serviced by open-cycle cooling water) exposed to raw water	Reduction of heat transfer due to fouling	Open-Cycle Cooling Water System (B2.1.9)	No	Not applicable. DCPP has no in-scope steel and stainless steel heat exchanger tubes (serviced by open-cycle cooling water) exposed to raw water in the engineered safety features systems, so the applicable NUREG-1801 lines were not used.
3.2.1.41	Copper alloy >15% Zn piping, piping components, piping elements, and heat exchanger components exposed to closed cycle cooling water	Loss of material due to selective leaching	Selective Leaching of Materials (B2.1.17)	No	Consistent with NUREG-1801.

Table 3.2.1 Summary of Aging Management Evaluations in Chapter V of NUREG-1801 for Engineered Safety Features (Continued)

Item Number	Component Type	Aging Effect / Mechanism	Aging Management Program	Further Evaluation Recommended	Discussion
3.2.1.42	Gray cast iron piping, piping components, piping elements exposed to closed-cycle cooling water	Loss of material due to selective leaching	Selective Leaching of Materials (B2.1.17)	No	Not applicable. DCPP has no in-scope gray cast iron piping, piping components, and piping elements exposed to closed-cycle cooling water in the engineered safety features systems, so the applicable NUREG-1801 line was not used.
3.2.1.43	Gray cast iron piping, piping components, and piping elements exposed to soil	Loss of material due to selective leaching	Selective Leaching of Materials (B2.1.17)	No	Not applicable. DCPP has no in-scope gray cast iron piping, piping components and piping elements exposed to soil in the engineered safety features systems, so the applicable NUREG-1801 line was not used.
3.2.1.44	Gray cast iron motor cooler exposed to treated water	Loss of material due to selective leaching	Selective Leaching of Materials (B2.1.17)	No	Not applicable. DCPP has no in-scope gray cast iron motor cooler exposed to treated water in the engineered safety features systems, so the applicable NUREG-1801 lines were not used.

Table 3.2.1 Summary of Aging Management Evaluations in Chapter V of NUREG-1801 for Engineered Safety Features (Continued)

Item Number	Component Type	Aging Effect / Mechanism	Aging Management Program	Further Evaluation Recommended	Discussion
3.2.1.45	Aluminum, copper alloy >15% Zn, and steel external surfaces, bolting, and piping, piping components, and piping elements exposed to air with borated water leakage	Loss of material due to Boric acid corrosion	Boric Acid Corrosion (B2.1.4)	No	Consistent with NUREG-1801.
3.2.1.46	Steel encapsulation components exposed to air with borated water leakage (internal)	Loss of material due to general, pitting, crevice and boric acid corrosion	Inspection of Internal Surfaces in Miscellaneous Piping and Ducting Components (B2.1.22)	No	Not applicable. DCPP has no in-scope steel encapsulation components exposed to air with borated water leakage (internal) in the engineered safety features systems, so the applicable NUREG-1801 line was not used.
3.2.1.47	Cast austenitic stainless steel piping, piping components, and piping elements exposed to treated borated water >250° C (>482° F)	Loss of fracture toughness due to thermal aging embrittlement	Thermal Aging Embrittlement of CASS	No	Not applicable. DCPP has no in-scope cast austenitic stainless steel piping, piping components, and piping elements exposed to treated borated water > 250° C (>482° F) in the emergency core cooling system, so the applicable NUREG-1801 line was not used.

Table 3.2.1 Summary of Aging Management Evaluations in Chapter V of NUREG-1801 for Engineered Safety Features (Continued)

Item Number	Component Type	Aging Effect / Mechanism	Aging Management Program	Further Evaluation Recommended	Discussion
3.2.1.48	Stainless steel or stainless-steel-clad steel piping, piping components, piping elements, and tanks (including safety injection tanks/accumulators) exposed to treated borated water >60° C (>140° F)	Cracking due to stress corrosion cracking	Water Chemistry (B2.1.2)	No	Consistent with NUREG-1801 for material, environment, and aging effect, but a different aging management program Water Chemistry (B2.1.2) and One-Time Inspection (B2.1.16) is credited.
3.2.1.49	Stainless steel piping, piping components, piping elements, and tanks exposed to treated borated water	Loss of material due to pitting and crevice corrosion	Water Chemistry (B2.1.2)	No	Consistent with NUREG-1801 for material, environment, and aging effect, but a different aging management program Water Chemistry (B2.1.2) and One-Time Inspection (B2.1.16) is credited.
3.2.1.50	Aluminum piping, piping components, and piping elements exposed to air- indoor uncontrolled (internal/external)	None	None	NA	Consistent with NUREG-1801.

Table 3.2.1 Summary of Aging Management Evaluations in Chapter V of NUREG-1801 for Engineered Safety Features (Continued)

Item Number	Component Type	Aging Effect / Mechanism	Aging Management Program	Further Evaluation Recommended	Discussion
3.2.1.51	Galvanized steel ducting exposed to air – indoor controlled (external)	None	None	NA	Consistent with NUREG-1801.
3.2.1.52	Glass piping elements exposed to air – indoor uncontrolled (external), lubricating oil, raw water, treated water, or treated borated water	None	None	NA	Consistent with NUREG-1801.
3.2.1.53	Stainless steel, copper alloy, and nickel alloy piping, piping components, and piping elements exposed to air – indoor uncontrolled (external)	None	None	NA	Consistent with NUREG-1801.
3.2.1.54	Steel piping, piping components, and piping elements exposed to air – indoor controlled (external)	None	None	NA	Not applicable. DCPP has no in-scope steel piping, piping components, and piping elements exposed to air – indoor controlled (external) in the engineered safety features systems, so the applicable NUREG-1801 line was not used.

Table 3.2.1 Summary of Aging Management Evaluations in Chapter V of NUREG-1801 for Engineered Safety Features (Continued)

Item Number	Component Type	Aging Effect / Mechanism	Aging Management Program	Further Evaluation Recommended	Discussion
3.2.1.55	Steel and stainless steel piping, piping components, and piping elements in concrete	None	None	NA	Consistent with NUREG-1801.
3.2.1.56	Steel, stainless steel, and copper alloy piping, piping components, and piping elements exposed to gas	None	None	NA	Consistent with NUREG-1801.
3.2.1.57	Stainless steel and copper alloy <15% Zn piping, piping components, and piping elements exposed to air with borated water leakage	None	None	NA	Consistent with NUREG-1801.

Table 3.2.2-1 Engineered Safety Features – Summary of Aging Management Evaluation – Safety Injection System

Component Type	Intended Function	Material	Environment	Aging Effect Requiring Management	Aging Management Program	NUREG-1801 Vol. 2 Item	Table 1 Item	Notes
Class 1 Piping <= 4in	PB	Stainless Steel	Borated Water Leakage (Ext)	None	None	V.F-13	3.2.1.57	A
Class 1 Piping <= 4in	PB	Stainless Steel	Reactor Coolant (Int)	Cracking	ASME Section XI Inservice Inspection, Subsections IWB, IWC, and IWD for Class 1 components (B2.1.1) and Water Chemistry (B2.1.2) and One-Time Inspection of ASME Code Class 1 Small-Bore Piping (B2.1.19)	IV.C2-1	3.1.1.70	B
Class 1 Piping <= 4in	PB	Stainless Steel	Reactor Coolant (Int)	Loss of material	Water Chemistry (B2.1.2) and One-Time Inspection (B2.1.16)	IV.C2-15	3.1.1.83	E, 2
Class 1 Piping <= 4in	PB	Stainless Steel	Treated Borated Water (Int)	Loss of material	Water Chemistry (B2.1.2) and One-Time Inspection (B2.1.16)	V.D1-30	3.2.1.49	E, 2
Class 1 Piping <= 4in	PB	Stainless Steel	Treated Borated Water (Int)	Cracking	Water Chemistry (B2.1.2) and One-Time Inspection (B2.1.16)	V.D1-31	3.2.1.48	E, 2
Closure Bolting	PB	Carbon Steel	Borated Water Leakage (Ext)	Loss of preload	Bolting Integrity (B2.1.7)	IV.C2-8	3.1.1.52	B
Closure Bolting	PB	Carbon Steel	Borated Water Leakage (Ext)	Loss of material	Boric Acid Corrosion (B2.1.4)	V.E-2	3.2.1.45	A
Closure Bolting	PB	Stainless Steel	Borated Water Leakage (Ext)	Loss of preload	Bolting Integrity (B2.1.7)	IV.C2-8	3.1.1.52	B
Expansion Joint	PB	Stainless Steel	Plant Indoor Air (Ext)	None	None	V.F-12	3.2.1.53	A
Expansion Joint	PB	Stainless Steel	Plant Indoor Air (Int)	Loss of material	Inspection of Internal Surfaces in Miscellaneous Piping and Ducting Components (B2.1.22)	V.D1-29	3.2.1.08	E
Filter	PB	Carbon Steel	Lubricating Oil (Int)	Loss of material	Lubricating Oil Analysis (B2.1.23) and One-Time Inspection (B2.1.16)	V.D1-28	3.2.1.16	B

Table 3.2.2-1 Engineered Safety Features – Summary of Aging Management Evaluation – Safety Injection System (Continued)

Component Type	Intended Function	Material	Environment	Aging Effect Requiring Management	Aging Management Program	NUREG-1801 Vol. 2 Item	Table 1 Item	Notes
Filter	PB	Carbon Steel	Plant Indoor Air (Ext)	Loss of material	External Surfaces Monitoring Program (B2.1.20)	V.E-7	3.2.1.31	B
Filter	PB	Cast Iron	Lubricating Oil (Int)	Loss of material	Lubricating Oil Analysis (B2.1.23) and One-Time Inspection (B2.1.16)	V.D1-28	3.2.1.16	B
Filter	PB	Cast Iron	Plant Indoor Air (Ext)	Loss of material	External Surfaces Monitoring Program (B2.1.20)	V.E-7	3.2.1.31	B
Flow Element	PB, TH	Stainless Steel	Borated Water Leakage (Ext)	None	None	V.F-13	3.2.1.57	A
Flow Element	PB, TH	Stainless Steel	Treated Borated Water (Int)	Loss of material	Water Chemistry (B2.1.2) and One-Time Inspection (B2.1.16)	V.D1-30	3.2.1.49	E, 2
Heat Exchanger (SI Pump Lube Oil)	HT, PB	Copper Alloy (> 15% Zinc)	Closed Cycle Cooling Water (Int)	Reduction of heat transfer	Closed-Cycle Cooling Water System (B2.1.10)	V.A-11	3.2.1.30	B
Heat Exchanger (SI Pump Lube Oil)	HT, PB	Copper Alloy (> 15% Zinc)	Closed Cycle Cooling Water (Int)	Loss of material	Closed-Cycle Cooling Water System (B2.1.10)	V.D1-2	3.2.1.29	B
Heat Exchanger (SI Pump Lube Oil)	HT, PB	Copper Alloy (> 15% Zinc)	Closed Cycle Cooling Water (Int)	Loss of material	Selective Leaching of Materials (B2.1.17)	V.D1-3	3.2.1.41	A
Heat Exchanger (SI Pump Lube Oil)	HT, PB	Copper Alloy (> 15% Zinc)	Lubricating Oil (Ext)	Reduction of heat transfer	Lubricating Oil Analysis (B2.1.23) and One-Time Inspection (B2.1.16)	V.D1-8	3.2.1.09	B

Table 3.2.2-1 Engineered Safety Features – Summary of Aging Management Evaluation – Safety Injection System (Continued)

Component Type	Intended Function	Material	Environment	Aging Effect Requiring Management	Aging Management Program	NUREG-1801 Vol. 2 Item	Table 1 Item	Notes
Heat Exchanger (SI Pump Lube Oil)	HT, PB	Copper Alloy (> 15% Zinc)	Lubricating Oil (Ext)	Loss of material	Lubricating Oil Analysis (B2.1.23) and One-Time Inspection (B2.1.16)	V.D1-18	3.2.1.06	D
Heat Exchanger (SI Pump Lube Oil)	PB	Copper Alloy (> 15% Zinc)	Lubricating Oil (Int)	Loss of material	Lubricating Oil Analysis (B2.1.23) and One-Time Inspection (B2.1.16)	V.D1-18	3.2.1.06	D
Heat Exchanger (SI Pump Lube Oil)	PB	Copper Alloy (> 15% Zinc)	Plant Indoor Air (Ext)	None	None	V.F-3	3.2.1.53	C
Heat Exchanger (SI Pump Seal Water)	PB	Carbon Steel	Closed Cycle Cooling Water (Int)	Loss of material	Closed-Cycle Cooling Water System (B2.1.10)	IV.C2-14	3.1.1.53	D
Heat Exchanger (SI Pump Seal Water)	PB	Carbon Steel	Plant Indoor Air (Ext)	Loss of material	External Surfaces Monitoring Program (B2.1.20)	V.E-7	3.2.1.31	B
Heat Exchanger (SI Pump Seal Water)	HT, PB	Stainless Steel	Closed Cycle Cooling Water (Ext)	Loss of material	Closed-Cycle Cooling Water System (B2.1.10)	V.D1-4	3.2.1.28	B

Table 3.2.2-1 Engineered Safety Features – Summary of Aging Management Evaluation – Safety Injection System (Continued)

Component Type	Intended Function	Material	Environment	Aging Effect Requiring Management	Aging Management Program	NUREG-1801 Vol. 2 Item	Table 1 Item	Notes
Heat Exchanger (SI Pump Seal Water)	HT, PB	Stainless Steel	Closed Cycle Cooling Water (Ext)	Reduction of heat transfer	Closed-Cycle Cooling Water System (B2.1.10)	V.D1-9	3.2.1.30	B
Heat Exchanger (SI Pump Seal Water)	HT, PB	Stainless Steel	Treated Borated Water (Int)	Reduction of heat transfer	Water Chemistry (B2.1.2) and One-Time Inspection (B2.1.16)	None	None	H, 4
Heat Exchanger (SI Pump Seal Water)	HT, PB	Stainless Steel	Treated Borated Water (Int)	Loss of material	Water Chemistry (B2.1.2) and One-Time Inspection (B2.1.16)	V.D1-30	3.2.1.49	E, 2
Heat Exchanger (SI Pump Seal Water)	HT, PB	Stainless Steel	Treated Borated Water (Int)	Cracking	Water Chemistry (B2.1.2) and One-Time Inspection (B2.1.16)	V.D1-31	3.2.1.48	E, 2
Indicator	LBS	Glass	Plant Indoor Air (Ext)	None	None	V.F-6	3.2.1.52	A
Indicator	LBS	Glass	Treated Borated Water (Int)	None	None	V.F-9	3.2.1.52	A
Indicator	LBS, SIA	Stainless Steel	Borated Water Leakage (Ext)	None	None	V.F-13	3.2.1.57	A
Indicator	LBS	Stainless Steel	Demineralized Water (Int)	Loss of material	Water Chemistry (B2.1.2) and One-Time Inspection (B2.1.16)	V.C-4	3.2.1.03	C
Indicator	LBS	Stainless Steel	Plant Indoor Air (Ext)	None	None	V.F-12	3.2.1.53	A

Table 3.2.2-1 Engineered Safety Features – Summary of Aging Management Evaluation – Safety Injection System (Continued)

Component Type	Intended Function	Material	Environment	Aging Effect Requiring Management	Aging Management Program	NUREG-1801 Vol. 2 Item	Table 1 Item	Notes
Indicator	LBS, SIA	Stainless Steel	Treated Borated Water (Int)	Loss of material	Water Chemistry (B2.1.2) and One-Time Inspection (B2.1.16)	V.A-27	3.2.1.49	E, 2
Liner Sumps	SPB	Stainless Steel	Encased in Concrete (Ext)	None	None	V.F-14	3.2.1.55	A
Liner Sumps	SPB	Stainless Steel	Plant Indoor Air (Int)	Loss of material	Inspection of Internal Surfaces in Miscellaneous Piping and Ducting Components (B2.1.22)	V.D1-29	3.2.1.08	E
Orifice	PB, TH	Stainless Steel	Borated Water Leakage (Ext)	None	None	V.F-13	3.2.1.57	A
Orifice	PB, TH	Stainless Steel	Treated Borated Water (Int)	Loss of material	Water Chemistry (B2.1.2) and One-Time Inspection (B2.1.16)	V.D1-30	3.2.1.49	E, 2
Piping	PB, SIA	Carbon Steel	Dry Gas (Int)	None	None	V.F-18	3.2.1.56	A
Piping	PB	Carbon Steel	Lubricating Oil (Int)	Loss of material	Lubricating Oil Analysis (B2.1.23) and One-Time Inspection (B2.1.16)	V.D1-28	3.2.1.16	B
Piping	LBS, PB, SIA	Carbon Steel	Plant Indoor Air (Ext)	Loss of material	External Surfaces Monitoring Program (B2.1.20)	V.E-7	3.2.1.31	B
Piping	LBS, SIA	Carbon Steel	Plant Indoor Air (Int)	Loss of material	Inspection of Internal Surfaces in Miscellaneous Piping and Ducting Components (B2.1.22)	V.A-19	3.2.1.32	B
Piping	LBS, PB, SIA	Stainless Steel	Borated Water Leakage (Ext)	None	None	V.F-13	3.2.1.57	A
Piping	LBS	Stainless Steel	Demineralized Water (Int)	Loss of material	Water Chemistry (B2.1.2) and One-Time Inspection (B2.1.16)	V.C-4	3.2.1.03	C
Piping	PB, SIA	Stainless Steel	Dry Gas (Int)	None	None	V.F-15	3.2.1.56	A

Table 3.2.2-1 Engineered Safety Features – Summary of Aging Management Evaluation – Safety Injection System (Continued)

Component Type	Intended Function	Material	Environment	Aging Effect Requiring Management	Aging Management Program	NUREG-1801 Vol. 2 Item	Table 1 Item	Notes
Piping	LBS, PB, SIA	Stainless Steel	Plant Indoor Air (Ext)	None	None	V.F-12	3.2.1.53	A
Piping	LBS, PB, SIA	Stainless Steel	Plant Indoor Air (Int)	Loss of material	Inspection of Internal Surfaces in Miscellaneous Piping and Ducting Components (B2.1.22)	V.D1-29	3.2.1.08	E
Piping	PB	Stainless Steel	Reactor Coolant (Int)	Cracking	ASME Section XI Inservice Inspection, Subsections IWB, IWC, and IWD for Class 1 components (B2.1.1) and Water Chemistry (B2.1.2)	IV.C2-2	3.1.1.68	A
Piping	PB	Stainless Steel	Reactor Coolant (Int)	Loss of material	Water Chemistry (B2.1.2) and One-Time Inspection (B2.1.16)	IV.C2-15	3.1.1.83	E, 2
Piping	PB	Stainless Steel	Treated Borated Water (Int)	Cumulative fatigue damage	Time-Limited Aging Analysis evaluated for the period of extended operation	V.D1-27	3.2.1.01	A
Piping	LBS, PB, SIA	Stainless Steel	Treated Borated Water (Int)	Loss of material	Water Chemistry (B2.1.2) and One-Time Inspection (B2.1.16)	V.D1-30	3.2.1.49	E, 2
Piping	LBS, PB, SIA	Stainless Steel	Treated Borated Water (Int)	Cracking	Water Chemistry (B2.1.2) and One-Time Inspection (B2.1.16)	V.D1-31	3.2.1.48	E, 2
Pump	PB	Carbon Steel	Lubricating Oil (Int)	Loss of material	Lubricating Oil Analysis (B2.1.23) and One-Time Inspection (B2.1.16)	V.D1-28	3.2.1.16	B
Pump	PB	Carbon Steel	Plant Indoor Air (Ext)	Loss of material	External Surfaces Monitoring Program (B2.1.20)	V.E-7	3.2.1.31	B
Pump	PB	Stainless Steel Cast Austenitic	Borated Water Leakage (Ext)	None	None	V.F-13	3.2.1.57	A

Table 3.2.2-1 Engineered Safety Features – Summary of Aging Management Evaluation – Safety Injection System (Continued)

Component Type	Intended Function	Material	Environment	Aging Effect Requiring Management	Aging Management Program	NUREG-1801 Vol. 2 Item	Table 1 Item	Notes
Pump	PB	Stainless Steel Cast Austenitic	Treated Borated Water (Int)	Loss of material	Water Chemistry (B2.1.2) and One-Time Inspection (B2.1.16)	V.D1-30	3.2.1.49	E, 2
Pump	PB	Stainless Steel Cast Austenitic	Treated Borated Water (Int)	Cracking	Water Chemistry (B2.1.2) and One-Time Inspection (B2.1.16)	V.D1-31	3.2.1.48	E, 2
Strainer	FIL, LBS	Stainless Steel	Borated Water Leakage (Ext)	None	None	V.F-13	3.2.1.57	A
Strainer	FIL	Stainless Steel	Plant Indoor Air (Ext)	None	None	V.F-12	3.2.1.53	A
Strainer	FIL, LBS	Stainless Steel	Plant Indoor Air (Int)	Loss of material	Inspection of Internal Surfaces in Miscellaneous Piping and Ducting Components (B2.1.22)	V.D1-29	3.2.1.08	E
Tank	PB	Carbon Steel	Plant Indoor Air (Ext)	Loss of material	External Surfaces Monitoring Program (B2.1.20)	V.E-7	3.2.1.31	B
Tank	PB	Carbon Steel	Plant Indoor Air (Int)	Loss of material	Inspection of Internal Surfaces in Miscellaneous Piping and Ducting Components (B2.1.22)	V.A-19	3.2.1.32	D
Tank	PB	Carbon Steel with Stainless Steel Cladding	Borated Water Leakage (Ext)	Loss of material	Boric Acid Corrosion (B2.1.4)	V.D1-1	3.2.1.45	A

Table 3.2.2-1 Engineered Safety Features – Summary of Aging Management Evaluation – Safety Injection System (Continued)

Component Type	Intended Function	Material	Environment	Aging Effect Requiring Management	Aging Management Program	NUREG-1801 Vol. 2 Item	Table 1 Item	Notes
Tank	PB	Carbon Steel with Stainless Steel Cladding	Dry Gas (Int)	None	None	V.F-15	3.2.1.56	C, 3
Tank	PB	Carbon Steel with Stainless Steel Cladding	Treated Borated Water (Int)	Loss of material	Water Chemistry (B2.1.2) and One-Time Inspection (B2.1.16)	V.D1-30	3.2.1.49	E, 2
Tank	PB	Stainless Steel	Encased in Concrete (Ext)	None	None	V.F-14	3.2.1.55	C
Tank	PB	Stainless Steel	Plant Indoor Air (Int)	Loss of material	Inspection of Internal Surfaces in Miscellaneous Piping and Ducting Components (B2.1.22)	V.D1-29	3.2.1.08	E
Tank	PB	Stainless Steel	Treated Borated Water (Int)	Loss of material	Water Chemistry (B2.1.2) and One-Time Inspection (B2.1.16)	V.D1-30	3.2.1.49	E, 2
Tank	PB	Stainless Steel	Treated Borated Water (Int)	Cracking	Water Chemistry (B2.1.2) and One-Time Inspection (B2.1.16)	V.D1-31	3.2.1.48	E, 2
Thermowell	PB	Stainless Steel	Borated Water Leakage (Ext)	None	None	V.F-13	3.2.1.57	A
Thermowell	PB	Stainless Steel	Treated Borated Water (Int)	Loss of material	Water Chemistry (B2.1.2) and One-Time Inspection (B2.1.16)	V.D1-30	3.2.1.49	E, 2
Valve	LBS	Carbon Steel	Demineralized Water (Int)	Loss of material	Water Chemistry (B2.1.2) and One-Time Inspection (B2.1.16)	V.C-6	3.2.1.15	A
Valve	PB, SIA	Carbon Steel	Dry Gas (Int)	None	None	V.F-18	3.2.1.56	A

Table 3.2.2-1 Engineered Safety Features – Summary of Aging Management Evaluation – Safety Injection System (Continued)

Component Type	Intended Function	Material	Environment	Aging Effect Requiring Management	Aging Management Program	NUREG-1801 Vol. 2 Item	Table 1 Item	Notes
Valve	PB	Carbon Steel	Lubricating Oil (Int)	Loss of material	Lubricating Oil Analysis (B2.1.23) and One-Time Inspection (B2.1.16)	V.D1-28	3.2.1.16	B
Valve	LBS, PB, SIA	Carbon Steel	Plant Indoor Air (Ext)	Loss of material	External Surfaces Monitoring Program (B2.1.20)	V.E-7	3.2.1.31	B
Valve	PB	Carbon Steel	Plant Indoor Air (Int)	Loss of material	Inspection of Internal Surfaces in Miscellaneous Piping and Ducting Components (B2.1.22)	V.A-19	3.2.1.32	B
Valve	PB	Copper Alloy (> 15% Zinc)	Lubricating Oil (Int)	Loss of material	Lubricating Oil Analysis (B2.1.23) and One-Time Inspection (B2.1.16)	V.D1-18	3.2.1.06	B
Valve	PB	Copper Alloy (> 15% Zinc)	Plant Indoor Air (Ext)	None	None	V.F-3	3.2.1.53	A
Valve	LBS, PB, SIA	Stainless Steel	Borated Water Leakage (Ext)	None	None	V.F-13	3.2.1.57	A
Valve	LBS	Stainless Steel	Demineralized Water (Int)	Loss of material	Water Chemistry (B2.1.2) and One-Time Inspection (B2.1.16)	V.C-4	3.2.1.03	C
Valve	PB, SIA	Stainless Steel	Dry Gas (Int)	None	None	V.F-15	3.2.1.56	A
Valve	PB	Stainless Steel	Lubricating Oil (Int)	Loss of material	Lubricating Oil Analysis (B2.1.23) and One-Time Inspection (B2.1.16)	V.D1-24	3.2.1.06	B
Valve	LBS, PB, SIA	Stainless Steel	Plant Indoor Air (Ext)	None	None	V.F-12	3.2.1.53	A
Valve	LBS, PB	Stainless Steel	Plant Indoor Air (Int)	Loss of material	Inspection of Internal Surfaces in Miscellaneous Piping and Ducting Components (B2.1.22)	V.D1-29	3.2.1.08	E

Table 3.2.2-1 Engineered Safety Features – Summary of Aging Management Evaluation – Safety Injection System (Continued)

Component Type	Intended Function	Material	Environment	Aging Effect Requiring Management	Aging Management Program	NUREG-1801 Vol. 2 Item	Table 1 Item	Notes
Valve	PB	Stainless Steel	Reactor Coolant (Int)	Cracking	ASME Section XI Inservice Inspection, Subsections IWB, IWC, and IWD for Class 1 components (B2.1.1) and Water Chemistry (B2.1.2)	IV.C2-2	3.1.1.68	A
Valve	PB	Stainless Steel	Reactor Coolant (Int)	Loss of material	Water Chemistry (B2.1.2) and One-Time Inspection (B2.1.16)	IV.C2-15	3.1.1.83	E, 2
Valve	LBS, PB, SIA	Stainless Steel	Treated Borated Water (Int)	Loss of material	Water Chemistry (B2.1.2) and One-Time Inspection (B2.1.16)	V.D1-30	3.2.1.49	E, 2
Valve	LBS, PB, SIA	Stainless Steel	Treated Borated Water (Int)	Cracking	Water Chemistry (B2.1.2) and One-Time Inspection (B2.1.16)	V.D1-31	3.2.1.48	E, 2
Valve	LBS, PB, SIA	Stainless Steel Cast Austenitic	Borated Water Leakage (Ext)	None	None	V.F-13	3.2.1.57	A
Valve	LBS	Stainless Steel Cast Austenitic	Demineralized Water (Int)	Loss of material	Water Chemistry (B2.1.2) and One-Time Inspection (B2.1.16)	V.C-4	3.2.1.03	A
Valve	PB	Stainless Steel Cast Austenitic	Dry Gas (Int)	None	None	V.F-15	3.2.1.56	A
Valve	LBS, PB	Stainless Steel Cast Austenitic	Plant Indoor Air (Ext)	None	None	V.F-12	3.2.1.53	A
Valve	LBS, PB	Stainless Steel Cast Austenitic	Plant Indoor Air (Int)	Loss of material	Inspection of Internal Surfaces in Miscellaneous Piping and Ducting Components (B2.1.22)	V.D1-29	3.2.1.08	E

Table 3.2.2-1 Engineered Safety Features – Summary of Aging Management Evaluation – Safety Injection System (Continued)

Component Type	Intended Function	Material	Environment	Aging Effect Requiring Management	Aging Management Program	NUREG-1801 Vol. 2 Item	Table 1 Item	Notes
Valve	PB	Stainless Steel Cast Austenitic	Reactor Coolant (Int)	Cracking	Water Chemistry (B2.1.2) and ASME Section XI Inservice Inspection, Subsections IWB, IWC, and IWD (B2.1.1)	IV.C2-3	3.1.1.24	E, 1
Valve	PB	Stainless Steel Cast Austenitic	Reactor Coolant (Int)	Loss of fracture toughness	ASME Section XI Inservice Inspection, Subsections IWB, IWC, and IWD (B2.1.1)	IV.C2-6	3.1.1.55	A
Valve	PB	Stainless Steel Cast Austenitic	Reactor Coolant (Int)	Loss of material	Water Chemistry (B2.1.2) and One-Time Inspection (B2.1.16)	IV.C2-15	3.1.1.83	E, 2
Valve	LBS, PB, SIA	Stainless Steel Cast Austenitic	Treated Borated Water (Int)	Loss of material	Water Chemistry (B2.1.2) and One-Time Inspection (B2.1.16)	V.D1-30	3.2.1.49	E, 2
Valve	LBS, PB	Stainless Steel Cast Austenitic	Treated Borated Water (Int)	Cracking	Water Chemistry (B2.1.2) and One-Time Inspection (B2.1.16)	V.D1-31	3.2.1.48	E, 2

Notes for Table 3.2.2-1:

Standard Notes:

A Consistent with NUREG-1801 item for component, material, environment, and aging effect. AMP is consistent with NUREG-1801 AMP.

B Consistent with NUREG-1801 item for component, material, environment, and aging effect. AMP takes some exceptions to NUREG-1801 AMP.

C Component is different, but consistent with NUREG-1801 item for material, environment, and aging effect. AMP is consistent with NUREG-1801 AMP.

D Component is different, but consistent with NUREG-1801 item for material, environment, and aging effect. AMP takes some exceptions to NUREG-1801 AMP.

E Consistent with NUREG-1801 for material, environment, and aging effect, but a different aging management program is credited or NUREG-1801 identifies a plant-specific aging management program.

H Aging effect not in NUREG-1801 for this component, material and environment combination.

Plant Specific Notes:

1 Water Chemistry (B2.1.2) and ASME Section XI Inservice Inspection, Subsections IWB, IWC, and IWD (B2.1.1) are used to manage this aging effect for Cast Austenitic Stainless Steel (CASS) components.

2 The Water Chemistry program (B2.1.2) and the One-Time Inspection program (B2.1.16) manages loss of material due to pitting and crevice corrosion and cracking due to stress corrosion cracking. The One-Time Inspection program (B2.1.16) includes selected components at susceptible locations.

3 There is a gas blanket of pressurized N_2, thus the vapor content is negligible.

4 The reduction of heat transfer aging effect is not identified in NUREG-1801 for this component, material, and environment combination. Reduction of heat transfer is not expected in heat exchangers with reactor coolant or treated borated water environments as long as water chemistry is maintained. Reduction of heat transfer is managed with Water Chemistry (B2.1.2) and One Time Inspection (B2.1.16).

Table 3.2.2-2 Engineered Safety Features – Summary of Aging Management Evaluation - Containment Spray System

Component Type	Intended Function	Material	Environment	Aging Effect Requiring Management	Aging Management Program	NUREG-1801 Vol. 2 Item	Table 1 Item	Notes
Bellows	PB	Stainless Steel	Demineralized Water (Int)	Loss of material	Water Chemistry (B2.1.2) and One-Time Inspection (B2.1.16)	V.C-4	3.2.1.03	A
Bellows	PB	Stainless Steel	Plant Indoor Air (Ext)	None	None	V.F-12	3.2.1.53	A
Closure Bolting	LBS, PB, SIA	Carbon Steel	Borated Water Leakage (Ext)	Loss of material	Boric Acid Corrosion (B2.1.4)	V.E-2	3.2.1.45	A
Closure Bolting	LBS, PB, SIA	Stainless Steel	Borated Water Leakage (Ext)	Loss of preload	Bolting Integrity (B2.1.7)	IV.C2-8	3.1.1.52	B
Closure Bolting	LBS, PB, SIA	Stainless Steel	Borated Water Leakage (Ext)	None	None	V.F-13	3.2.1.57	A
Eductor	PB	Stainless Steel	Plant Indoor Air (Ext)	None	None	V.F-12	3.2.1.53	A
Eductor	PB	Stainless Steel	Sodium Hydroxide (Int)	Loss of material	Water Chemistry (B2.1.2) and One-Time Inspection (B2.1.16)	None	None	G, 1
Flow Element	PB, TH	Stainless Steel	Borated Water Leakage (Ext)	None	None	V.F-13	3.2.1.57	A
Flow Element	PB, TH	Stainless Steel	Plant Indoor Air (Ext)	None	None	V.F-12	3.2.1.53	A
Flow Element	PB, TH	Stainless Steel	Sodium Hydroxide (Int)	Loss of material	Water Chemistry (B2.1.2) and One-Time Inspection (B2.1.16)	None	None	G, 1
Flow Element	PB, TH	Stainless Steel	Treated Borated Water (Int)	Loss of material	Water Chemistry (B2.1.2) and One-Time Inspection (B2.1.16)	V.A-27	3.2.1.49	E, 2
Orifice	PB, TH	Stainless Steel	Plant Indoor Air (Ext)	None	None	V.F-12	3.2.1.53	A

Table 3.2.2-2 Engineered Safety Features – Summary of Aging Management Evaluation - Containment Spray System (Continued)

Component Type	Intended Function	Material	Environment	Aging Effect Requiring Management	Aging Management Program	NUREG-1801 Vol. 2 Item	Table 1 Item	Notes
Orifice	PB, TH	Stainless Steel	Plant Indoor Air (Int)	Loss of material	Inspection of Internal Surfaces in Miscellaneous Piping and Ducting Components (B2.1.22)	V.A-26	3.2.1.08	E
Piping	LBS, PB, SIA	Stainless Steel	Borated Water Leakage (Ext)	None	None	V.F-13	3.2.1.57	A
Piping	PB	Stainless Steel	Demineralized Water (Int)	Loss of material	Water Chemistry (B2.1.2) and One-Time Inspection (B2.1.16)	V.C-4	3.2.1.03	C
Piping	PB, SIA	Stainless Steel	Dry Gas (Int)	None	None	V.F-15	3.2.1.56	A
Piping	LBS, PB, SIA	Stainless Steel	Plant Indoor Air (Ext)	None	None	V.F-12	3.2.1.53	A
Piping	PB, SIA	Stainless Steel	Plant Indoor Air (Int)	Loss of material	Inspection of Internal Surfaces in Miscellaneous Piping and Ducting Components (B2.1.22)	V.A-26	3.2.1.08	E
Piping	LBS, PB, SIA	Stainless Steel	Sodium Hydroxide (Int)	Loss of material	Water Chemistry (B2.1.2) and One-Time Inspection (B2.1.16)	None	None	G, 1
Piping	LBS, PB, SIA	Stainless Steel	Treated Borated Water (Int)	Loss of material	Water Chemistry (B2.1.2) and One-Time Inspection (B2.1.16)	V.A-27	3.2.1.49	E, 2

Table 3.2.2-2 Engineered Safety Features – Summary of Aging Management Evaluation - Containment Spray System (Continued)

Component Type	Intended Function	Material	Environment	Aging Effect Requiring Management	Aging Management Program	NUREG-1801 Vol. 2 Item	Table 1 Item	Notes
Pump	PB	Stainless Steel	Borated Water Leakage (Ext)	None	None	V.F-13	3.2.1.57	A
Pump	PB	Stainless Steel	Treated Borated Water (Int)	Loss of material	Water Chemistry (B2.1.2) and One-Time Inspection (B2.1.16)	V.A-27	3.2.1.49	E, 2
Spray Nozzle	SP	Stainless Steel	Plant Indoor Air (Ext)	None	None	V.F-12	3.2.1.53	C
Spray Nozzle	SP	Stainless Steel	Plant Indoor Air (Int)	Loss of material	Inspection of Internal Surfaces in Miscellaneous Piping and Ducting Components (B2.1.22)	V.A-26	3.2.1.08	E
Tank	PB	Stainless Steel	Dry Gas (Int)	None	None	V.F-15	3.2.1.56	C
Tank	PB	Stainless Steel	Plant Indoor Air (Ext)	None	None	V.F-12	3.2.1.53	C
Tank	PB	Stainless Steel	Sodium Hydroxide (Int)	Loss of material	Water Chemistry (B2.1.2) and One-Time Inspection (B2.1.16)	None	None	G, 1
Tubing	PB	Stainless Steel	Borated Water Leakage (Ext)	None	None	V.F-13	3.2.1.57	A
Tubing	PB	Stainless Steel	Dry Gas (Int)	None	None	V.F-15	3.2.1.56	A
Tubing	PB	Stainless Steel	Plant Indoor Air (Ext)	None	None	V.F-12	3.2.1.53	A

Table 3.2.2-2 Engineered Safety Features – Summary of Aging Management Evaluation - Containment Spray System (Continued)

Component Type	Intended Function	Material	Environment	Aging Effect Requiring Management	Aging Management Program	NUREG-1801 Vol. 2 Item	Table 1 Item	Notes
Tubing	PB	Stainless Steel	Sodium Hydroxide (Int)	Loss of material	Water Chemistry (B2.1.2) and One-Time Inspection (B2.1.16)	None	None	G, 1
Tubing	PB	Stainless Steel	Treated Borated Water (Int)	Loss of material	Water Chemistry (B2.1.2) and One-Time Inspection (B2.1.16)	V.A-27	3.2.1.49	E, 2
Valve	PB	Copper Alloy	Dry Gas (Int)	None	None	V.F-4	3.2.1.56	A
Valve	PB	Copper Alloy	Plant Indoor Air (Ext)	None	None	V.F-3	3.2.1.53	A
Valve	LBS, PB, SIA	Stainless Steel	Borated Water Leakage (Ext)	None	None	V.F-13	3.2.1.57	A
Valve	PB	Stainless Steel	Dry Gas (Int)	None	None	V.F-15	3.2.1.56	A
Valve	PB	Stainless Steel	Plant Indoor Air (Ext)	None	None	V.F-12	3.2.1.53	A
Valve	PB	Stainless Steel	Plant Indoor Air (Int)	Loss of material	Inspection of Internal Surfaces in Miscellaneous Piping and Ducting Components (B2.1.22)	V.A-26	3.2.1.08	E
Valve	PB	Stainless Steel	Sodium Hydroxide (Int)	Loss of material	Water Chemistry (B2.1.2) and One-Time Inspection (B2.1.16)	None	None	G, 1
Valve	LBS, PB, SIA	Stainless Steel	Treated Borated Water (Int)	Loss of material	Water Chemistry (B2.1.2) and One-Time Inspection (B2.1.16)	V.A-27	3.2.1.49	E, 2

Notes for Table 3.2.2-2:

Standard Notes:

A Consistent with NUREG-1801 item for component, material, environment, and aging effect. AMP is consistent with NUREG-1801 AMP.

B Consistent with NUREG-1801 item for component, material, environment, and aging effect. AMP takes some exceptions to NUREG-1801 AMP.

C Component is different, but consistent with NUREG-1801 item for material, environment, and aging effect. AMP is consistent with NUREG-1801 AMP.

E Consistent with NUREG-1801 for material, environment, and aging effect, but a different aging management program is credited or NUREG-1801 identifies a plant-specific aging management program.

G Environment not in NUREG-1801 for this component and material.

Plant Specific Notes:

1 There is no NUREG-1801 line for the environment of NaOH. The use of stainless steel up to 200° F and 50 weight percent NaOH is common in industrial applications with no special consideration for aging. The NaOH concentration is controlled by the Water Chemistry Program. Therefore Water Chemistry (B2.1.2), augmented by One-Time Inspection (B2.1.16), has been selected as the aging management program.

2 The Water Chemistry program (B2.1.2) and the One-Time Inspection program (B2.1.16) manages loss of material due to pitting and crevice corrosion and cracking due to stress corrosion cracking. The One-Time Inspection program (B2.1.16) includes selected components at susceptible locations.

Table 3.2.2-3 Engineered Safety Features – Summary of Aging Management Evaluation – Residual Heat Removal System

Component Type	Intended Function	Material	Environment	Aging Effect Requiring Management	Aging Management Program	NUREG-1801 Vol. 2 Item	Table 1 Item	Notes
Closure Bolting	PB	Carbon Steel	Borated Water Leakage (Ext)	Loss of preload	Bolting Integrity (B2.1.7)	IV.C2-8	3.1.1.52	B
Closure Bolting	PB	Carbon Steel	Borated Water Leakage (Ext)	Loss of material	Boric Acid Corrosion (B2.1.4)	V.E-2	3.2.1.45	A
Closure Bolting	PB	Stainless Steel	Borated Water Leakage (Ext)	Cracking	Bolting Integrity (B2.1.7)	IV.C2-7	3.1.1.52	B
Closure Bolting	PB	Stainless Steel	Borated Water Leakage (Ext)	Loss of preload	Bolting Integrity (B2.1.7)	IV.C2-8	3.1.1.52	B
Flow Element	PB, TH	Stainless Steel	Borated Water Leakage (Ext)	None	None	V.F-13	3.2.1.57	A
Flow Element	PB, TH	Stainless Steel	Treated Borated Water (Int)	Loss of material	Water Chemistry (B2.1.2) and One-Time Inspection (B2.1.16)	V.D1-30	3.2.1.49	E, 3
Heat Exchanger (Residual Heat Removal)	PB	Carbon Steel	Closed-Cycle Cooling Water (Ext)	Loss of material	Closed-Cycle Cooling Water System (B2.1.10)	V.D1-6	3.2.1.27	B
Heat Exchanger (Residual Heat Removal)	PB	Carbon Steel	Closed-Cycle Cooling Water (Int)	Loss of material	Closed-Cycle Cooling Water System (B2.1.10)	V.D1-6	3.2.1.27	B
Heat Exchanger (Residual Heat Removal)	PB	Carbon Steel	Plant Indoor Air (Ext)	Loss of material	External Surfaces Monitoring Program (B2.1.20)	V.E-7	3.2.1.31	B

Table 3.2.2-3 Engineered Safety Features – Summary of Aging Management Evaluation – Residual Heat Removal System (Continued)

Component Type	Intended Function	Material	Environment	Aging Effect Requiring Management	Aging Management Program	NUREG-1801 Vol. 2 Item	Table 1 Item	Notes
Heat Exchanger (Residual Heat Removal)	PB	Carbon Steel with Stainless Steel Cladding	Treated Borated Water (Ext)	Loss of material	Water Chemistry (B2.1.2) and One-Time Inspection (B2.1.16)	V.D1-30	3.2.1.49	E, 3
Heat Exchanger (Residual Heat Removal)	PB	Carbon Steel with Stainless Steel Cladding	Treated Borated Water (Ext)	Cracking	Water Chemistry (B2.1.2) and One-Time Inspection (B2.1.16)	V.D1-31	3.2.1.48	E, 3
Heat Exchanger (Residual Heat Removal)	PB	Stainless Steel	Borated Water Leakage (Ext)	None	None	V.F-13	3.2.1.57	C
Heat Exchanger (Residual Heat Removal)	HT, PB	Stainless Steel	Closed-Cycle Cooling Water (Ext)	Loss of material	Closed-Cycle Cooling Water System (B2.1.10)	V.D1-4	3.2.1.28	B
Heat Exchanger (Residual Heat Removal)	HT, PB	Stainless Steel	Closed-Cycle Cooling Water (Ext)	Reduction of heat transfer	Closed-Cycle Cooling Water System (B2.1.10)	V.D1-9	3.2.1.30	B
Heat Exchanger (Residual Heat Removal)	HT, PB	Stainless Steel	Closed-Cycle Cooling Water (Ext)	Cracking	Closed-Cycle Cooling Water System (B2.1.10)	V.D1-23	3.2.1.25	D

Table 3.2.2-3 Engineered Safety Features – Summary of Aging Management Evaluation – Residual Heat Removal System (Continued)

Component Type	Intended Function	Material	Environment	Aging Effect Requiring Management	Aging Management Program	NUREG-1801 Vol. 2 Item	Table 1 Item	Notes
Heat Exchanger (Residual Heat Removal)	HT, PB	Stainless Steel	Treated Borated Water (Int)	Reduction of heat transfer	Water Chemistry (B2.1.2) and One-Time Inspection (B2.1.16)	None	None	H, 4
Heat Exchanger (Residual Heat Removal)	HT, PB	Stainless Steel	Treated Borated Water (Int)	Loss of material	Water Chemistry (B2.1.2) and One-Time Inspection (B2.1.16)	V.D1-30	3.2.1.49	E, 3
Heat Exchanger (Residual Heat Removal)	HT, PB	Stainless Steel	Treated Borated Water (Int)	Cracking	Water Chemistry (B2.1.2) and One-Time Inspection (B2.1.16)	V.D1-31	3.2.1.48	E, 3
Orifice	PB, TH	Stainless Steel	Borated Water Leakage (Ext)	None	None	V.F-13	3.2.1.57	A
Orifice	PB, TH	Stainless Steel	Treated Borated Water (Int)	Loss of material	Water Chemistry (B2.1.2) and One-Time Inspection (B2.1.16)	V.D1-30	3.2.1.49	E, 3
Orifice	PB, TH	Stainless Steel	Treated Borated Water (Int)	Cracking	Water Chemistry (B2.1.2) and One-Time Inspection (B2.1.16)	V.D1-31	3.2.1.48	E, 3
Piping	DF	Carbon Steel	Plant Indoor Air (Ext)	Loss of material	External Surfaces Monitoring Program (B2.1.20)	V.E-7	3.2.1.31	B

Table 3.2.2-3 Engineered Safety Features – Summary of Aging Management Evaluation – Residual Heat Removal System (Continued)

Component Type	Intended Function	Material	Environment	Aging Effect Requiring Management	Aging Management Program	NUREG-1801 Vol. 2 Item	Table 1 Item	Notes
Piping	DF	Carbon Steel	Plant Indoor Air (Int)	Loss of material	Inspection of Internal Surfaces in Miscellaneous Piping and Ducting Components (B2.1.22)	V.A-19	3.2.1.32	B
Piping	LBS, PB, SIA	Stainless Steel	Borated Water Leakage (Ext)	None	None	V.F-13	3.2.1.57	A
Piping	LBS, SIA	Stainless Steel	Plant Indoor Air (Int)	Loss of material	Inspection of Internal Surfaces in Miscellaneous Piping and Ducting Components (B2.1.22)	V.D1-29	3.2.1.08	E
Piping	PB	Stainless Steel	Reactor Coolant (Int)	Cracking	ASME Section XI Inservice Inspection, Subsections IWB, IWC, and IWD for Class 1 components (B2.1.1) and Water Chemistry (B2.1.2)	IV.C2-2	3.1.1.68	A
Piping	PB	Stainless Steel	Reactor Coolant (Int)	Loss of material	Water Chemistry (B2.1.2) and One-Time Inspection (B2.1.16)	IV.C2-15	3.1.1.83	E, 3
Piping	PB	Stainless Steel	Treated Borated Water (Int)	Cumulative fatigue damage	Time-Limited Aging Analysis evaluated for the period of extended operation	V.D1-27	3.2.1.01	A

Table 3.2.2-3 Engineered Safety Features – Summary of Aging Management Evaluation – Residual Heat Removal System (Continued)

Component Type	Intended Function	Material	Environment	Aging Effect Requiring Management	Aging Management Program	NUREG-1801 Vol. 2 Item	Table 1 Item	Notes
Piping	LBS, PB, SIA	Stainless Steel	Treated Borated Water (Int)	Loss of material	Water Chemistry (B2.1.2) and One-Time Inspection (B2.1.16)	V.D1-30	3.2.1.49	E, 3
Piping	LBS, PB, SIA	Stainless Steel	Treated Borated Water (Int)	Cracking	Water Chemistry (B2.1.2) and One-Time Inspection (B2.1.16)	V.D1-31	3.2.1.48	E, 3
Pump	PB	Stainless Steel Cast Austenitic	Borated Water Leakage (Ext)	None	None	V.F-13	3.2.1.57	A
Pump	PB	Stainless Steel Cast Austenitic	Treated Borated Water (Int)	Loss of material	Water Chemistry (B2.1.2) and One-Time Inspection (B2.1.16)	V.D1-30	3.2.1.49	E, 3
Pump	PB	Stainless Steel Cast Austenitic	Treated Borated Water (Int)	Cracking	Water Chemistry (B2.1.2) and One-Time Inspection (B2.1.16)	V.D1-31	3.2.1.48	E, 3
Tubing	PB	Stainless Steel	Borated Water Leakage (Ext)	None	None	V.F-13	3.2.1.57	A
Tubing	PB	Stainless Steel	Demineralized Water (Int)	Loss of material	Water Chemistry (B2.1.2) and One-Time Inspection (B2.1.16)	V.C-4	3.2.1.03	C
Tubing	PB	Stainless Steel	Plant Indoor Air (Ext)	None	None	V.F-12	3.2.1.53	A
Tubing	PB	Stainless Steel	Treated Borated Water (Int)	Loss of material	Water Chemistry (B2.1.2) and One-Time Inspection (B2.1.16)	V.D1-30	3.2.1.49	E, 3

Table 3.2.2-3 Engineered Safety Features – Summary of Aging Management Evaluation – Residual Heat Removal System (Continued)

Component Type	Intended Function	Material	Environment	Aging Effect Requiring Management	Aging Management Program	NUREG-1801 Vol. 2 Item	Table 1 Item	Notes
Tubing	PB	Stainless Steel	Treated Borated Water (Int)	Cracking	Water Chemistry (B2.1.2) and One-Time Inspection (B2.1.16)	V.D1-31	3.2.1.48	E, 3
Valve	LBS, PB, SIA	Stainless Steel	Borated Water Leakage (Ext)	None	None	V.F-13	3.2.1.57	A
Valve	PB	Stainless Steel	Reactor Coolant (Int)	Cracking	ASME Section XI Inservice Inspection, Subsections IWB, IWC, and IWD for Class 1 components (B2.1.1) and Water Chemistry (B2.1.2)	IV.C2-5	3.1.1.68	A
Valve	PB	Stainless Steel	Reactor Coolant (Int)	Loss of material	Water Chemistry (B2.1.2) and One-Time Inspection (B2.1.16)	IV.C2-15	3.1.1.83	E, 3
Valve	LBS, PB, SIA	Stainless Steel	Treated Borated Water (Int)	Loss of material	Water Chemistry (B2.1.2) and One-Time Inspection (B2.1.16)	V.D1-30	3.2.1.49	E, 3
Valve	LBS, PB, SIA	Stainless Steel	Treated Borated Water (Int)	Cracking	Water Chemistry (B2.1.2) and One-Time Inspection (B2.1.16)	V.D1-31	3.2.1.48	E, 3
Valve	PB	Stainless Steel Cast Austenitic	Borated Water Leakage (Ext)	None	None	V.F-13	3.2.1.57	A

Table 3.2.2-3 Engineered Safety Features – Summary of Aging Management Evaluation – Residual Heat Removal System (Continued)

Component Type	Intended Function	Material	Environment	Aging Effect Requiring Management	Aging Management Program	NUREG-1801 Vol. 2 Item	Table 1 Item	Notes
Valve	PB	Stainless Steel Cast Austenitic	Reactor Coolant (Int)	Cracking	Water Chemistry (B2.1.2) and ASME Section XI Inservice Inspection, Subsections IWB, IWC, and IWD (B2.1.1)	IV.C2-3	3.1.1.24	E, 2
Valve	PB	Stainless Steel Cast Austenitic	Reactor Coolant (Int)	Loss of material	Water Chemistry (B2.1.2), and One-Time Inspection (B2.1.16)	IV.C2-15	3.1.1.83	E, 1, 3
Valve	PB	Stainless Steel Cast Austenitic	Treated Borated Water (Int)	Loss of material	Water Chemistry (B2.1.2) and One-Time Inspection (B2.1.16)	V.D1-30	3.2.1.49	E, 3
Valve	PB	Stainless Steel Cast Austenitic	Treated Borated Water (Int)	Cracking	Water Chemistry (B2.1.2) and One-Time Inspection (B2.1.16)	V.D1-31	3.2.1.48	E, 3

Notes for Table 3.2.2-3:

Standard Notes:

A Consistent with NUREG-1801 item for component, material, environment, and aging effect. AMP is consistent with NUREG-1801 AMP.

B Consistent with NUREG-1801 item for component, material, environment, and aging effect. AMP takes some exceptions to NUREG-1801 AMP.

C Component is different, but consistent with NUREG-1801 item for material, environment, and aging effect. AMP is consistent with NUREG-1801 AMP.

D Component is different, but consistent with NUREG-1801 item for material, environment, and aging effect. AMP takes some exceptions to NUREG-1801 AMP.

E Consistent with NUREG-1801 for material, environment, and aging effect, but a different aging management program is credited or NUREG-1801 identifies a plant-specific aging management program.

H Aging effect not in NUREG-1801 for this component, material and environment combination.

Plant Specific Notes:

1 The suction line of RHR is not expected to be >482º F. Therefore, the aging effect of thermal aging embrittlement is not applicable.

2 Water Chemistry program (B2.1.2) and ASME Section XI Inservice Inspection, Subsections IWB, IWC, and IWD program (B2.1.1) are used to manage this aging effect for Cast Austenitic Stainless Steel (CASS) components.

3 The Water Chemistry program (B2.1.2) and the One-Time Inspection program (B2.1.16) manages loss of material due to pitting and crevice corrosion and cracking due to stress corrosion cracking. The One-Time Inspection program (B2.1.16) includes selected components at susceptible locations.

4 Reduction of heat transfer due to fouling is a potential aging effect/mechanism for stainless steel heat exchanger components in treated borated water. This non-NUREG-1801 line is based upon the component, material, aging effects and aging management program combination of NUREG-1801 line V.A-16.

Table 3.2.2-4 Engineered Safety Features – Summary of Aging Management Evaluation – Containment HVAC System

Component Type	Intended Function	Material	Environment	Aging Effect Requiring Management	Aging Management Program	NUREG-1801 Vol. 2 Item	Table 1 Item	Notes
Closure Bolting	LBS, PB, SIA, SS	Carbon Steel	Plant Indoor Air (Ext)	Loss of material	Bolting Integrity (B2.1.7)	VII.I-4	3.3.1.43	B
Closure Bolting	LBS, PB, SIA, SS	Carbon Steel	Plant Indoor Air (Ext)	Loss of preload	Bolting Integrity (B2.1.7)	VII.I-5	3.3.1.45	B
Closure Bolting	LBS, PB, SIA, SS	Carbon Steel	Plant Indoor Air (Ext)	Loss of material	External Surfaces Monitoring Program (B2.1.20)	VII.I-7	3.3.1.55	B, 7
Closure Bolting	LBS, PB, SIA, SS	Stainless Steel	Plant Indoor Air (Ext)	Loss of preload	Bolting Integrity (B2.1.7)	None	None	H, 1
Closure Bolting	LBS, PB, SIA, SS	Stainless Steel	Plant Indoor Air (Ext)	None	None	VII.J-15	3.3.1.94	C
Damper	PB, SS	Carbon Steel	Plant Indoor Air (Ext)	Loss of material	External Surfaces Monitoring Program (B2.1.20)	VII.F3-2	3.3.1.56	B
Damper	PB, SS	Carbon Steel	Ventilation Atmosphere (Int)	Loss of material	Inspection of Internal Surfaces in Miscellaneous Piping and Ducting Components (B2.1.22)	VII.F3-3	3.3.1.72	B
Damper	PB, SS	Carbon Steel (Galvanized)	Plant Indoor Air (Ext)	None	None	V.F-1	3.2.1.51	A
Damper	PB, SS	Carbon Steel (Galvanized)	Ventilation Atmosphere (Int)	None	None	VII.J-6	3.3.1.92	C
Ductwork	PB, SIA, SS	Carbon Steel (Galvanized)	Plant Indoor Air (Ext)	None	None	V.F-1	3.2.1.51	A

Table 3.2.2-4 Engineered Safety Features – Summary of Aging Management Evaluation – Containment HVAC System (Continued)

Component Type	Intended Function	Material	Environment	Aging Effect Requiring Management	Aging Management Program	NUREG-1801 Vol. 2 Item	Table 1 Item	Notes
Ductwork	PB, SIA, SS	Carbon Steel (Galvanized)	Ventilation Atmosphere (Int)	None	None	VII.J-6	3.3.1.92	C
Fan	PB	Aluminum	Plant Indoor Air (Ext)	None	None	V.F-2	3.2.1.50	C
Fan	PB	Aluminum	Ventilation Atmosphere (Int)	None	None	V.F-2	3.2.1.50	C
Fan	PB, SIA, SS	Carbon Steel	Plant Indoor Air (Ext)	Loss of material	External Surfaces Monitoring Program (B2.1.20)	VII.F3-2	3.3.1.56	B
Fan	SS	Carbon Steel	Plant Indoor Air (Int)	Loss of material	Inspection of Internal Surfaces in Miscellaneous Piping and Ducting Components (B2.1.22)	VII.F3-3	3.3.1.72	B
Fan	PB, SIA, SS	Carbon Steel	Ventilation Atmosphere (Int)	Loss of material	Inspection of Internal Surfaces in Miscellaneous Piping and Ducting Components (B2.1.22)	VII.F3-3	3.3.1.72	B
Fan	SS	Carbon Steel (Galvanized)	Plant Indoor Air (Ext)	None	None	V.F-1	3.2.1.51	C
Fan	SS	Carbon Steel (Galvanized)	Plant Indoor Air (Int)	Loss of material	Inspection of Internal Surfaces in Miscellaneous Piping and Ducting Components (B2.1.22)	VII.F3-3	3.3.1.72	B
Fan	SS	Carbon Steel (Galvanized)	Ventilation Atmosphere (Int)	None	None	VII.J-6	3.3.1.92	C
Filter	PB	Carbon Steel	Plant Indoor Air (Ext)	Loss of material	External Surfaces Monitoring Program (B2.1.20)	VII.F3-2	3.3.1.56	B

Table 3.2.2-4 Engineered Safety Features – Summary of Aging Management Evaluation – Containment HVAC System (Continued)

Component Type	Intended Function	Material	Environment	Aging Effect Requiring Management	Aging Management Program	NUREG-1801 Vol. 2 Item	Table 1 Item	Notes
Filter	PB	Carbon Steel	Ventilation Atmosphere (Int)	Loss of material	Inspection of Internal Surfaces in Miscellaneous Piping and Ducting Components (B2.1.22)	VII.F3-3	3.3.1.72	B
Filter	SS	Carbon Steel (Galvanized)	Plant Indoor Air (Ext)	None	None	V.F-1	3.2.1.51	C
Filter	SS	Carbon Steel (Galvanized)	Ventilation Atmosphere (Int)	None	None	VII.J-6	3.3.1.92	C
Flex Connectors	PB	Elastomer	Plant Indoor Air (Ext)	Loss of material	External Surfaces Monitoring Program (B2.1.20)	VII.F3-5	3.3.1.34	E
Flex Connectors	PB	Elastomer	Plant Indoor Air (Ext)	Hardening and loss of strength	External Surfaces Monitoring Program (B2.1.20)	VII.F3-7	3.3.1.11	E
Flex Connectors	PB	Elastomer	Ventilation Atmosphere (Int)	Loss of material	Inspection of Internal Surfaces in Miscellaneous Piping and Ducting Components (B2.1.22)	VII.F3-6	3.3.1.34	E
Flex Connectors	PB	Elastomer	Ventilation Atmosphere (Int)	Hardening and loss of strength	Inspection of Internal Surfaces in Miscellaneous Piping and Ducting Components (B2.1.22)	VII.F3-7	3.3.1.11	E
Flow Element	PB	Stainless Steel	Plant Indoor Air (Ext)	None	None	VII.J-15	3.3.1.94	A
Flow Element	PB	Stainless Steel	Ventilation Atmosphere (Int)	None	None	VII.J-15	3.3.1.94	A, 2
Heat Exchanger (Containment Fan Motor)	HT, PB	Carbon Steel	Closed Cycle Cooling Water (Int)	Loss of material	Closed-Cycle Cooling Water System (B2.1.10)	VII.F3-11	3.3.1.48	B

Table 3.2.2-4 Engineered Safety Features – Summary of Aging Management Evaluation – Containment HVAC System (Continued)

Component Type	Intended Function	Material	Environment	Aging Effect Requiring Management	Aging Management Program	NUREG-1801 Vol. 2 Item	Table 1 Item	Notes
Heat Exchanger (Containment Fan Motor)	HT, PB	Carbon Steel	Ventilation Atmosphere (Ext)	Loss of material	External Surfaces Monitoring Program (B2.1.20)	VII.F3-10	3.3.1.59	B
Heat Exchanger (Containment Fan Motor)	HT, PB	Copper Alloy	Closed Cycle Cooling Water (Int)	Loss of material	Closed-Cycle Cooling Water System (B2.1.10)	VII.F3-8	3.3.1.51	B
Heat Exchanger (Containment Fan Motor)	HT, PB	Copper Alloy	Closed Cycle Cooling Water (Int)	Reduction of heat transfer	Closed-Cycle Cooling Water System (B2.1.10)	VII.F3-12	3.3.1.52	B
Heat Exchanger (Containment Fan Motor)	HT, PB	Copper Alloy	Ventilation Atmosphere (Ext)	None	None	V.F-3	3.2.1.53	C
Heat Exchanger (Containment Fan)	HT, PB	Carbon Steel	Closed Cycle Cooling Water (Int)	Loss of material	Closed-Cycle Cooling Water System (B2.1.10)	VII.F3-11	3.3.1.48	B
Heat Exchanger (Containment Fan)	HT, PB	Carbon Steel	Ventilation Atmosphere (Ext)	Loss of material	External Surfaces Monitoring Program (B2.1.20)	VII.F3-10	3.3.1.59	B

Table 3.2.2-4 Engineered Safety Features – Summary of Aging Management Evaluation – Containment HVAC System (Continued)

Component Type	Intended Function	Material	Environment	Aging Effect Requiring Management	Aging Management Program	NUREG-1801 Vol. 2 Item	Table 1 Item	Notes
Heat Exchanger (Containment Fan)	HT, PB	Copper Alloy	Closed Cycle Cooling Water (Int)	Loss of material	Closed-Cycle Cooling Water System (B2.1.10)	VII.F3-8	3.3.1.51	B
Heat Exchanger (Containment Fan)	HT, PB	Copper Alloy	Closed Cycle Cooling Water (Int)	Reduction of heat transfer	Closed-Cycle Cooling Water System (B2.1.10)	VII.F3-12	3.3.1.52	B
Heat Exchanger (Containment Fan)	HT, PB	Copper Alloy	Ventilation Atmosphere (Ext)	None	None	V.F-3	3.2.1.53	C
Heat Exchanger (Containment Purge)	HT, PB	Cast Iron (Gray Cast Iron)	Secondary Water (Int)	Loss of material	Selective Leaching of Materials (B2.1.17)	VIII.F-19	3.4.1.36	C
Heat Exchanger (Containment Purge)	HT, PB	Cast Iron (Gray Cast Iron)	Ventilation Atmosphere (Ext)	Loss of material	External Surfaces Monitoring Program (B2.1.20)	VII.F3-10	3.3.1.59	B
Heat Exchanger (Containment Purge)	HT, PB	Copper Alloy	Secondary Water (Int)	Reduction of heat transfer	Water Chemistry (B2.1.2) and One-Time Inspection (B2.1.16)	VIII.F-7	3.4.1.09	A

Table 3.2.2-4 Engineered Safety Features – Summary of Aging Management Evaluation – Containment HVAC System (Continued)

Component Type	Intended Function	Material	Environment	Aging Effect Requiring Management	Aging Management Program	NUREG-1801 Vol. 2 Item	Table 1 Item	Notes
Heat Exchanger (Containment Purge)	HT, PB	Copper Alloy	Secondary Water (Int)	Loss of material	Water Chemistry (B2.1.2) and One-Time Inspection (B2.1.16)	VIII.F-15	3.4.1.15	C
Heat Exchanger (Containment Purge)	HT, PB	Copper Alloy	Ventilation Atmosphere (Ext)	None	None	V.F-3	3.2.1.53	C
Heat Exchanger (Incore Instrument Room)	LBS	Carbon Steel	Closed Cycle Cooling Water (Int)	Loss of material	Closed-Cycle Cooling Water System (B2.1.10)	VII.F3-11	3.3.1.48	B
Heat Exchanger (Incore Instrument Room)	LBS	Carbon Steel	Plant Indoor Air (Ext)	Loss of material	External Surfaces Monitoring Program (B2.1.20)	VII.F3-10	3.3.1.59	B
Heat Exchanger (Incore Instrument Room)	LBS	Copper Alloy	Closed Cycle Cooling Water (Int)	Loss of material	Closed-Cycle Cooling Water System (B2.1.10)	VII.F3-8	3.3.1.51	B

Table 3.2.2-4 Engineered Safety Features – Summary of Aging Management Evaluation – Containment HVAC System (Continued)

Component Type	Intended Function	Material	Environment	Aging Effect Requiring Management	Aging Management Program	NUREG-1801 Vol. 2 Item	Table 1 Item	Notes
Heat Exchanger (Incore Instrument Room)	LBS	Copper Alloy	Plant Indoor Air (Ext)	None	None	V.F-3	3.2.1.53	C
Heat Exchanger (Incore Instrument Room)	SS	Copper Alloy	Plant Indoor Air (Ext)	None	None	V.F-3	3.2.1.53	C
Heat Exchanger (Incore Instrument Room)	SS	Copper Alloy	Plant Indoor Air (Int)	None	None	None	None	G, 4
Heat Exchanger (Incore Instrument Room)	LBS	Copper Alloy (> 15% Zinc)	Closed Cycle Cooling Water (Int)	Loss of material	Selective Leaching of Materials (B2.1.17)	VII.C2-6	3.3.1.84	C
Heat Exchanger (Incore Instrument Room)	LBS	Copper Alloy (> 15% Zinc)	Closed Cycle Cooling Water (Int)	Loss of material	Closed-Cycle Cooling Water System (B2.1.10)	VII.F3-8	3.3.1.51	B

Table 3.2.2-4 Engineered Safety Features – Summary of Aging Management Evaluation – Containment HVAC System (Continued)

Component Type	Intended Function	Material	Environment	Aging Effect Requiring Management	Aging Management Program	NUREG-1801 Vol. 2 Item	Table 1 Item	Notes
Heat Exchanger (Incore Instrument Room)	LBS	Copper Alloy (> 15% Zinc)	Plant Indoor Air (Ext)	None	None	V.F-3	3.2.1.53	C
Heat Exchanger (Incore Instrument Room)	LBS	Stainless Steel	Closed Cycle Cooling Water (Int)	Loss of material	Closed-Cycle Cooling Water System (B2.1.10)	VII.C2-10	3.3.1.50	D
Heat Exchanger (Incore Instrument Room)	LBS	Stainless Steel	Plant Indoor Air (Ext)	None	None	VII.J-15	3.3.1.94	C
Piping	LBS	Carbon Steel	Closed Cycle Cooling Water (Int)	Loss of material	Closed-Cycle Cooling Water System (B2.1.10)	V.C-9	3.2.1.26	B
Piping	LBS, PB, SIA, SS	Carbon Steel	Plant Indoor Air (Ext)	Loss of material	External Surfaces Monitoring Program (B2.1.20)	VII.F3-2	3.3.1.56	D
Piping	LBS, PB, SIA, SS	Carbon Steel	Plant Indoor Air (Int)	Loss of material	Inspection of Internal Surfaces in Miscellaneous Piping and Ducting Components (B2.1.22)	V.A-19	3.2.1.32	B
Piping	LBS, PB, SIA, SS	Carbon Steel	Ventilation Atmosphere (Int)	Loss of material	Inspection of Internal Surfaces in Miscellaneous Piping and Ducting Components (B2.1.22)	VII.F3-3	3.3.1.72	D

Table 3.2.2-4 Engineered Safety Features – Summary of Aging Management Evaluation – Containment HVAC System (Continued)

Component Type	Intended Function	Material	Environment	Aging Effect Requiring Management	Aging Management Program	NUREG-1801 Vol. 2 Item	Table 1 Item	Notes
Piping	LBS, PB, SIA, SS	Stainless Steel	Plant Indoor Air (Ext)	None	None	VII.J-15	3.3.1.94	A
Piping	SIA, SS	Stainless Steel	Plant Indoor Air (Int)	Loss of material	Inspection of Internal Surfaces in Miscellaneous Piping and Ducting Components (B2.1.22)	V.A-26	3.2.1.08	E
Piping	SIA, SS	Stainless Steel	Raw Water (Int)	Loss of material	Inspection of Internal Surfaces in Miscellaneous Piping and Ducting Components (B2.1.22)	VIII.F-22	3.4.1.32	E, 3
Piping	LBS, PB, SIA, SS	Stainless Steel	Ventilation Atmosphere (Int)	None	None	VII.J-15	3.3.1.94	A, 2
Recombiners	SS	Stainless Steel	Plant Indoor Air (Ext)	None	None	VII.J-15	3.3.1.94	C
Recombiners	SS	Stainless Steel	Plant Indoor Air (Int)	Loss of material	Inspection of Internal Surfaces in Miscellaneous Piping and Ducting Components (B2.1.22)	V.A-26	3.2.1.08	E
Separator	PB	Stainless Steel	Plant Indoor Air (Ext)	None	None	VII.J-15	3.3.1.94	C
Separator	PB	Stainless Steel	Ventilation Atmosphere (Int)	Loss of material	Inspection of Internal Surfaces in Miscellaneous Piping and Ducting Components (B2.1.22)	VII.F3-1	3.3.1.27	E
Solenoid Valve	SIA	Copper Alloy (> 15% Zinc)	Dry Gas (Int)	None	None	VII.J-4	3.3.1.97	A
Solenoid Valve	SIA	Copper Alloy (> 15% Zinc)	Plant Indoor Air (Ext)	None	None	V.F-3	3.2.1.53	A
Tubing	LBS, SIA	Stainless Steel	Plant Indoor Air (Ext)	None	None	VII.J-15	3.3.1.94	A

Table 3.2.2-4 Engineered Safety Features – Summary of Aging Management Evaluation – Containment HVAC System (Continued)

Component Type	Intended Function	Material	Environment	Aging Effect Requiring Management	Aging Management Program	NUREG-1801 Vol. 2 Item	Table 1 Item	Notes
Tubing	LBS, PB, SIA	Stainless Steel	Ventilation Atmosphere (Ext)	None	None	VII.J-15	3.3.1.94	A, 2
Tubing	SIA	Stainless Steel	Ventilation Atmosphere (Int)	None	None	VII.J-15	3.3.1.94	A
Tubing	SIA	Stainless Steel	Ventilation Atmosphere (Int)	None	None	VII.J-15	3.3.1.94	A, 2
Tubing	LBS	Stainless Steel	Ventilation Atmosphere (Int)	None	None	VII.J-15	3.3.1.94	A, 2
Tubing	LBS, PB	Stainless Steel	Ventilation Atmosphere (Int)	None	None	VII.J-15	3.3.1.94	A
Valve	PB, SIA, SS	Carbon Steel	Plant Indoor Air (Ext)	Loss of material	External Surfaces Monitoring Program (B2.1.20)	VII.F3-2	3.3.1.56	D
Valve	PB, SS	Carbon Steel	Plant Indoor Air (Int)	Loss of material	Inspection of Internal Surfaces in Miscellaneous Piping and Ducting Components (B2.1.22)	V.A-19	3.2.1.32	B
Valve	PB, SIA	Carbon Steel	Ventilation Atmosphere (Int)	Loss of material	Inspection of Internal Surfaces in Miscellaneous Piping and Ducting Components (B2.1.22)	VII.F3-3	3.3.1.72	D
Valve	PB	Cast Iron (Gray Cast Iron)	Plant Indoor Air (Ext)	Loss of material	External Surfaces Monitoring Program (B2.1.20)	VII.F3-2	3.3.1.56	D

Table 3.2.2-4 Engineered Safety Features – Summary of Aging Management Evaluation – Containment HVAC System (Continued)

Component Type	Intended Function	Material	Environment	Aging Effect Requiring Management	Aging Management Program	NUREG-1801 Vol. 2 Item	Table 1 Item	Notes
Valve	PB	Cast Iron (Gray Cast Iron)	Ventilation Atmosphere (Int)	Loss of material	Inspection of Internal Surfaces in Miscellaneous Piping and Ducting Components (B2.1.22)	VII.F3-3	3.3.1.72	D
Valve	LBS	Copper Alloy (> 15% Zinc)	Closed Cycle Cooling Water (Int)	Loss of material	Closed-Cycle Cooling Water System (B2.1.10)	VII.F3-15	3.3.1.51	B
Valve	LBS	Copper Alloy (> 15% Zinc)	Closed Cycle Cooling Water (Int)	Loss of material	Selective Leaching of Materials (B2.1.17)	VII.F3-17	3.3.1.84	A
Valve	LBS, SIA	Copper Alloy (> 15% Zinc)	Plant Indoor Air (Ext)	None	None	V.F-3	3.2.1.53	A
Valve	SS	Copper Alloy (> 15% Zinc)	Plant Indoor Air (Ext)	None	None	V.F-3	3.2.1.53	A
Valve	SS	Copper Alloy (> 15% Zinc)	Plant Indoor Air (Int)	None	None	None	None	G, 5
Valve	SIA	Copper Alloy (> 15% Zinc)	Ventilation Atmosphere (Int)	None	None	None	None	G, 6
Valve	PB, SIA	Stainless Steel	Dry Gas (Int)	None	None	VII.J-19	3.3.1.97	A
Valve	PB, SIA, SS	Stainless Steel	Plant Indoor Air (Ext)	None	None	VII.J-15	3.3.1.94	A
Valve	PB, SIA, SS	Stainless Steel	Plant Indoor Air (Int)	Loss of material	Inspection of Internal Surfaces in Miscellaneous Piping and Ducting Components (B2.1.22)	V.A-26	3.2.1.08	E

Table 3.2.2-4 Engineered Safety Features – Summary of Aging Management Evaluation – Containment HVAC System (Continued)

Component Type	Intended Function	Material	Environment	Aging Effect Requiring Management	Aging Management Program	NUREG-1801 Vol. 2 Item	Table 1 Item	Notes
Valve	PB, SIA	Stainless Steel	Ventilation Atmosphere (Int)	None	None	VII.J-15	3.3.1.94	A, 2
Valve	PB	Stainless Steel Cast Austenitic	Plant Indoor Air (Ext)	None	None	VII.J-15	3.3.1.94	A
Valve	PB	Stainless Steel Cast Austenitic	Ventilation Atmosphere (Int)	None	None	VII.J-15	3.3.1.94	A, 2

Notes for Table 3.2.2-4:

Standard Notes:

A Consistent with NUREG-1801 item for component, material, environment, and aging effect. AMP is consistent with NUREG-1801 AMP.

B Consistent with NUREG-1801 item for component, material, environment, and aging effect. AMP takes some exceptions to NUREG-1801 AMP.

C Component is different, but consistent with NUREG-1801 item for material, environment, and aging effect. AMP is consistent with NUREG-1801 AMP.

D Component is different, but consistent with NUREG-1801 item for material, environment, and aging effect. AMP takes some exceptions to NUREG-1801 AMP.

E Consistent with NUREG-1801 for material, environment, and aging effect, but a different aging management program is credited or NUREG-1801 identifies a plant-specific aging management program.

G Environment not in NUREG-1801 for this component and material.

H Aging effect not in NUREG-1801 for this component, material and environment combination.

Plant Specific Notes:

1 The Loss of Preload aging effect is not identified in NUREG-1801 for this component, material, and environment combination. Loss of preload is managed by the Bolting Integrity program (B2.1.7).

2 Small bore stainless steel piping, instrument tubing, valves and other piping components associated with DCPP containment air sampling, monitoring and purge functions have an internal environment of ventilation atmosphere. Condensation is not expected in these components consistent with the NUREG-1801 line referenced.

3 Component internal environment is condensation from cooling coil drains that is evaluated as raw water per NUREG-1801, Section IX. This raw water environment is managed by Inspection of Internal Surfaces in Miscellaneous Piping and Ducting Components program (B2.1.22) because it is not suitable for management by Open-Cycle Cooling Water program (B2.1.9).

4 Components are heat exchanger tubes that are abandoned-in-place and isolated. The operating temperature for these components is above dew point. Condensation can occur but rarely. Components surfaces are normally dry..

5 Components are valves that are abandoned-in-place; The operating temperature for these components is above dew point. Condensation can occur but rarely. Components surfaces are normally dry.

6 The operating temperature for these components is above dew point. Condensation can occur but rarely. Components surfaces are normally dry. Therefore, the aging evaluation is consistent with NUREG-1801 V.F-3 that evaluates copper alloys in a plant indoor (external) environment.

7 This NUREG-1801 line is used to evaluate ducting closure bolting.

3.3 AGING MANAGEMENT OF AUXILIARY SYSTEMS

3.3.1 Introduction

Section 3.3 provides the results of the aging management reviews (AMRs) for those component types identified in Section 2.3.3, Auxiliary Systems, subject to AMR. These systems are described in the following sections:

- Cranes and Fuel Handling System (Section 2.3.3.1)
- Spent Fuel Pool Cooling System (Section 2.3.3.2)
- Saltwater and Chlorination System (Section 2.3.3.3)
- Component Cooling Water System (Section 2.3.3.4)
- Makeup Water System (Section 2.3.3.5)
- Nuclear Steam Supply Sampling System (Section 2.3.3.6)
- Compressed Air System (Section 2.3.3.7)
- Chemical and Volume Control System (Section 2.3.3.8)
- Miscellaneous HVAC Systems (Section 2.3.3.9)
- Control Room HVAC System (Section 2.3.3.10)
- Auxiliary Building HVAC System (Section 2.3.3.11)
- Fire Protection System (Section 2.3.3.12)
- Diesel Generator Fuel Oil System (Section 2.3.3.13)
- Diesel Generator System (Section 2.3.3.14)
- Lube Oil System (Section 2.3.3.15)
- Gaseous Radwaste System (Section 2.3.3.16)
- Liquid Radwaste System (Section 2.3.3.17)
- Miscellaneous Systems in scope ONLY for Criterion 10 CFR 54.4(a)(2) (Section 2.3.3.18)

Table 3.3.1, Summary of Aging Management Evaluations in Chapter VII of NUREG-1801 for Auxiliary Systems, provides the summary of the programs evaluated in NUREG-1801 that are applicable to the component types in this section. Table 3.3.1 uses the format of Table 1 described in Section 3.0.

3.3.2 Results

The following tables summarize the results of the AMR for the systems in the Auxiliary Systems area:

- Table 3.3.2-1 Auxiliary Systems – Summary of Aging Management Evaluation – Cranes and Fuel Handling System
- Table 3.3.2-2 Auxiliary Systems – Summary of Aging Management Evaluation – Spent Fuel Pool Cooling System
- Table 3.3.2-3 Auxiliary Systems – Summary of Aging Management Evaluation – Saltwater and Chlorination System
- Table 3.3.2-4 Auxiliary Systems – Summary of Aging Management Evaluation – Component Cooling Water System
- Table 3.3.2-5 Auxiliary Systems – Summary of Aging Management Evaluation – Makeup Water System
- Table 3.3.2-6 Auxiliary Systems – Summary of Aging Management Evaluation – Nuclear Steam Supply Sampling System
- Table 3.3.2-7 Auxiliary Systems – Summary of Aging Management Evaluation – Compressed Air System
- Table 3.3.2-8 Auxiliary Systems – Summary of Aging Management Evaluation – Chemical and Volume Control System
- Table 3.3.2-9 Auxiliary Systems – Summary of Aging Management Evaluation – Miscellaneous HVAC Systems
- Table 3.3.2-10 Auxiliary Systems – Summary of Aging Management Evaluation – Control Room HVAC System
- Table 3.3.2-11 Auxiliary Systems – Summary of Aging Management Evaluation – Auxiliary Building HVAC System
- Table 3.3.2-12 Auxiliary Systems – Summary of Aging Management Evaluation – Fire Protection System
- Table 3.3.2-13 Auxiliary Systems – Summary of Aging Management Evaluation – Diesel Generator Fuel Oil System
- Table 3.3.2-14 Auxiliary Systems – Summary of Aging Management Evaluation – Diesel Generator System
- Table 3.3.2-15 Auxiliary Systems – Summary of Aging Management Evaluation – Lube Oil System

- Table 3.3.2-16 Auxiliary Systems – Summary of Aging Management Evaluation – Gaseous Radwaste System
- Table 3.3.2-17 Auxiliary Systems – Summary of Aging Management Evaluation – Liquid Radwaste System
- Table 3.3.2-18 Auxiliary Systems – Summary of Aging Management Evaluation – Miscellaneous Systems in scope ONLY for Criterion 10 CFR 54.4(a)(2)

These tables use the format of Table 2 discussed in Section 3.0.

3.3.2.1 Materials, Environments, Aging Effects Requiring Management and Aging Management Programs

The materials from which the component types are fabricated, the environments to which they are exposed, the potential aging effects requiring management, and the aging management programs used to manage these aging effects are provided for each of the above systems in the following subsections.

3.3.2.1.1 Cranes and Fuel Handling System

Materials

The materials of construction for the cranes and fuel handling system component types are:

- Carbon Steel
- Stainless Steel

Environment

The cranes and fuel handling system components are exposed to the following environments:

- Atmosphere/ Weather
- Plant Indoor Air
- Treated Borated Water

Aging Effects Requiring Management

The following cranes and fuel handling system aging effects require management:

- Loss of material

Aging Management Programs

The following aging management programs manage the aging effects for the cranes and fuel handling system component types:

- Inspection of Overhead Heavy Load and Light Load (Related to Refueling) Handling Systems (B2.1.11)
- One-Time Inspection (B2.1.16)
- Water Chemistry (B2.1.2)

3.3.2.1.2 Spent Fuel Pool Cooling System

Materials

The materials of construction for the spent fuel pool cooling system component types are:

- Carbon Steel
- Carbon Steel with Stainless Steel Cladding
- Elastomer
- Glass
- Stainless Steel
- Stainless Steel Cast Austenitic

Environment

The spent fuel pool cooling system component types are exposed to the following environments:

- Borated Water Leakage
- Closed-Cycle Cooling Water
- Demineralized Water
- Encased in Concrete
- Plant Indoor Air
- Treated Borated Water

Aging Effects Requiring Management

The following spent fuel pool cooling system aging effects require management:

- Hardening and loss of strength
- Loss of material
- Loss of preload
- Reduction of heat transfer

Aging Management Programs

The following aging management programs manage the aging effects for the spent fuel pool cooling system component types:

- Bolting Integrity (B2.1.7)
- Boric Acid Corrosion (B2.1.4)
- Closed-Cycle Cooling Water System (B2.1.10)
- External Surfaces Monitoring Program (B2.1.20)
- Inspection of Internal Surfaces in Miscellaneous Piping and Ducting Components (B2.1.22)
- One-Time Inspection (B2.1.16)
- Water Chemistry (B2.1.2)

3.3.2.1.3 Saltwater and Chlorination System

Materials

The materials of construction for the saltwater and chlorination system component types are:

- Carbon Steel
- Cast Iron
- Copper Alloy
- Copper Alloy (Aluminum > 8 percent)
- Elastomer
- Nickel-Alloys

- Polyvinyl Chloride (PVC)
- Stainless Steel
- Stainless Steel Cast Austenitic
- Titanium (Grade 9)

Environment

The saltwater and chlorination system component types are exposed to the following environments:

- Atmosphere/ Weather
- Buried
- Encased in Concrete
- Plant Indoor Air
- Raw Water

Aging Effects Requiring Management

The following saltwater and chlorination system aging effects require management:

- Cracking
- Hardening and loss of strength
- Loss of material
- Loss of preload

Aging Management Programs

The following aging management programs manage the aging effects for the saltwater and chlorination system component types:

- Bolting Integrity (B2.1.7)
- Buried Piping and Tanks Inspection (B2.1.18)
- External Surfaces Monitoring Program (B2.1.20)
- Inspection of Internal Surfaces in Miscellaneous Piping and Ducting Components (B2.1.22)
- Open-Cycle Cooling Water System (B2.1.9)
- Selective Leaching of Materials (B2.1.17)

3.3.2.1.4 Component Cooling Water System

Materials

The materials of construction for the component cooling water system component types are:

- Aluminum
- Carbon Steel
- Cast Iron
- Copper Alloy
- Glass
- Nickel-Alloys
- Stainless Steel
- Stainless Steel Cast Austenitic

Environment

The component cooling water system components are exposed to the following environments:

- Closed-Cycle Cooling Water
- Demineralized Water
- Dry Gas
- Lubricating Oil
- Plant Indoor Air
- Raw Water
- Treated Borated Water

Aging Effects Requiring Management

The following component cooling water system aging effects require management:

- Cracking
- Loss of material
- Loss of preload

- Reduction of heat transfer

Aging Management Programs

The following aging management programs manage the aging effects for the component cooling water system component types:

- Bolting Integrity (B2.1.7)
- Closed-Cycle Cooling Water System (B2.1.10)
- External Surfaces Monitoring Program (B2.1.20)
- Inspection of Internal Surfaces in Miscellaneous Piping and Ducting Components (B2.1.22)
- Lubricating Oil Analysis (B2.1.23)
- One-Time Inspection (B2.1.16)
- Open-Cycle Cooling Water System (B2.1.9)
- Water Chemistry (B2.1.2)

3.3.2.1.5 Makeup Water System

Materials

The materials of construction for the makeup water system component types are:

- Asbestos Cement
- Carbon Steel
- Carbon Steel (Galvanized)
- Cast Iron
- Cast Iron (Gray Cast Iron)
- Copper Alloy
- Stainless Steel
- Stainless Steel Cast Austenitic

Environment

The makeup water system components are exposed to the following environments:

- Atmosphere/ Weather

- Buried
- Demineralized Water
- Encased in Concrete
- Plant Indoor Air
- Potable Water
- Raw Water
- Sodium Hydroxide
- Sulfuric Acid

Aging Effects Requiring Management

The following makeup water system aging effects require management:

- Loss of material
- Loss of material, cracking and changes in material properties
- Loss of preload

Aging Management Programs

The following aging management programs manage the aging effects for the makeup water system component types:

- Bolting Integrity (B2.1.7)
- Buried Piping and Tanks Inspection (B2.1.18)
- External Surfaces Monitoring Program (B2.1.20)
- Fire Water System (B2.1.13)
- Inspection of Internal Surfaces in Miscellaneous Piping and Ducting Components (B2.1.22)
- One-Time Inspection (B2.1.16)
- Selective Leaching of Materials (B2.1.17)
- Water Chemistry (B2.1.2)

3.3.2.1.6 Nuclear Steam Supply Sampling System

Materials

The materials of construction for the nuclear steam supply sampling system component types are:

- Carbon Steel
- Stainless Steel
- Stainless Steel Cast Austenitic

Environment

The nuclear steam supply sampling system component types are exposed to the following environments:

- Borated Water Leakage
- Closed-Cycle Cooling Water
- Demineralized Water
- Encased in Concrete
- Plant Indoor Air
- Treated Borated Water
- Ventilation Atmosphere

Aging Effects Requiring Management

The following nuclear steam supply sampling system aging effects require management:

- Cracking
- Loss of material
- Loss of preload

Aging Management Programs

The following aging management programs manage the aging effects for the nuclear steam supply sampling system component types:

- Bolting Integrity (B2.1.7)
- Boric Acid Corrosion (B2.1.4)

- Closed-Cycle Cooling Water System (B2.1.10)
- External Surfaces Monitoring Program (B2.1.20)
- Inspection of Internal Surfaces in Miscellaneous Piping and Ducting Components (B2.1.22)
- One-Time Inspection (B2.1.16)
- Water Chemistry (B2.1.2)

3.3.2.1.7 Compressed Air System

Materials

The materials of construction for the compressed air system component types are:

- Aluminum
- Carbon Steel
- Cast Iron
- Copper Alloy
- Copper Alloy (> 15 percent Zinc)
- Stainless Steel

Environment

The compressed air system component types are exposed to the following environments:

- Atmosphere/ Weather
- Demineralized Water
- Dry Gas
- Plant Indoor Air

Aging Effects Requiring Management

The following compressed air system aging effects require management:

- Loss of material
- Loss of preload

Aging Management Programs

The following aging management programs manage the aging effects for the compressed air system component types:

- Bolting Integrity (B2.1.7)
- External Surfaces Monitoring Program (B2.1.20)
- Inspection of Internal Surfaces in Miscellaneous Piping and Ducting Components (B2.1.22)
- One-Time Inspection (B2.1.16)
- Selective Leaching of Materials (B2.1.17)
- Water Chemistry (B2.1.2)

3.3.2.1.8 Chemical and Volume Control System

Materials

The materials of construction for the chemical and volume control system component types are:

- Aluminum
- Carbon Steel
- Carbon Steel (Galvanized)
- Carbon Steel with Stainless Steel Cladding
- Cast Iron
- Copper Alloy
- Copper Alloy (> 15 percent Zinc)
- Glass
- Nickel-Alloys
- Stainless Steel
- Stainless Steel Cast Austenitic

Environment

The chemical and volume control system component types are exposed to the following environments:

- Borated Water Leakage
- Closed-Cycle Cooling Water
- Demineralized Water
- Dry Gas
- Lubricating Oil
- Plant Indoor Air
- Reactor Coolant
- Secondary Water
- Sodium Hydroxide
- Steam
- Treated Borated Water
- Ventilation Atmosphere

Aging Effects Requiring Management

The following chemical and volume control system aging effects require management:

- Cracking
- Loss of material
- Loss of preload
- Reduction of heat transfer
- Wall thinning

Aging Management Programs

The following aging management programs manage the aging effects for the chemical and volume control system component types:

- ASME Section XI Inservice Inspection, Subsections IWB, IWC, and IWD (B2.1.1)
- Bolting Integrity (B2.1.7)
- Boric Acid Corrosion (B2.1.4)
- Closed-Cycle Cooling Water System (B2.1.10)

- External Surfaces Monitoring Program (B2.1.20)
- Flow-Accelerated Corrosion (B2.1.6)
- Inspection of Internal Surfaces in Miscellaneous Piping and Ducting Components (B2.1.22)
- Lubricating Oil Analysis (B2.1.23)
- One-Time Inspection (B2.1.16)
- One-Time Inspection of ASME Code Class 1 Small-Bore Piping (B2.1.19)
- Selective Leaching of Materials (B2.1.17)
- Water Chemistry (B2.1.2)

3.3.2.1.9 Miscellaneous HVAC Systems

Materials

The materials of construction for the miscellaneous HVAC systems component types are:

- Carbon Steel
- Carbon Steel (Galvanized)
- Copper Alloy
- Elastomer
- Stainless Steel

Environment

The miscellaneous HVAC systems component types are exposed to the following environments:

- Closed-Cycle Cooling Water
- Dry Gas
- Encased in Concrete
- Plant Indoor Air
- Ventilation Atmosphere

Aging Effects Requiring Management

The following miscellaneous HVAC systems aging effects require management:

- Hardening and loss of strength
- Loss of material
- Loss of preload

Aging Management Programs

The following aging management programs manage the aging effects for the miscellaneous HVAC systems component types:

- Bolting Integrity (B2.1.7)
- Closed-Cycle Cooling Water System (B2.1.10)
- External Surfaces Monitoring Program (B2.1.20)
- Inspection of Internal Surfaces in Miscellaneous Piping and Ducting Components (B2.1.22)

3.3.2.1.10 Control Room HVAC System

Materials

The materials of construction for the control room HVAC system component types are:

- Carbon Steel
- Carbon Steel (Galvanized)
- Copper Alloy
- Copper Alloy (> 15 percent Zinc)
- Elastomer
- Glass
- Stainless Steel

Environment

The control room HVAC system component types are exposed to the following environments:

- Dry Gas
- Encased in Concrete
- Lubricating Oil
- Plant Indoor Air
- Ventilation Atmosphere

Aging Effects Requiring Management

The following control room HVAC system aging effects require management:

- Hardening and loss of strength
- Loss of material
- Loss of preload

Aging Management Programs

The following aging management programs manage the aging effects for the control room HVAC system component types:

- Bolting Integrity (B2.1.7)
- External Surfaces Monitoring Program (B2.1.20)
- Inspection of Internal Surfaces in Miscellaneous Piping and Ducting Components (B2.1.22)
- Lubricating Oil Analysis (B2.1.23)
- One-Time Inspection (B2.1.16)

3.3.2.1.11 Auxiliary Building HVAC System

Materials

The materials of construction for the auxiliary building HVAC system component types are:

- Carbon Steel
- Carbon Steel (Galvanized)
- Cast Iron
- Copper Alloy

- Copper Alloy (> 15 percent Zinc)
- Elastomer
- Glass
- Stainless Steel

Environment

The auxiliary building HVAC system component types are exposed to the following environments:

- Atmosphere/ Weather
- Closed-Cycle Cooling Water
- Demineralized Water
- Dry Gas
- Encased in Concrete
- Plant Indoor Air
- Potable Water
- Raw Water
- Secondary Water
- Ventilation Atmosphere

Aging Effects Requiring Management

The following auxiliary building HVAC system aging effects require management:

- Hardening and loss of strength
- Loss of material
- Loss of preload

Aging Management Programs

The following aging management programs manage the aging effects for the auxiliary building HVAC system component types:

- Bolting Integrity (B2.1.7)
- Closed-Cycle Cooling Water System (B2.1.10)

- External Surfaces Monitoring Program (B2.1.20)
- Inspection of Internal Surfaces in Miscellaneous Piping and Ducting Components (B2.1.22)
- One-Time Inspection (B2.1.16)
- Selective Leaching of Materials (B2.1.17)
- Water Chemistry (B2.1.2)

3.3.2.1.12 Fire Protection System

Materials

The materials of construction for the fire protection system component types are:

- Aluminum
- Asbestos Cement
- Carbon Steel
- Carbon Steel (Galvanized)
- Cast Iron
- Cast Iron (Gray Cast Iron)
- Copper Alloy
- Copper Alloy (> 15 percent Zinc)
- Ductile Iron
- Glass
- Polyvinyl Chloride (PVC)
- Stainless Steel

Environment

The fire protection system component types are exposed to the following environments:

- Atmosphere/ Weather
- Buried
- Dry Gas

- Fuel Oil
- Plant Indoor Air
- Raw Water

Aging Effects Requiring Management

The following fire protection system aging effects require management:

- Loss of material
- Loss of material, cracking and changes in material properties
- Loss of preload

Aging Management Programs

The following aging management programs manage the aging effects for the fire protection system component types:

- Bolting Integrity (B2.1.7)
- Buried Piping and Tanks Inspection (B2.1.18)
- External Surfaces Monitoring Program (B2.1.20)
- Fire Protection (B2.1.12)
- Fire Water System (B2.1.13)
- Fuel Oil Chemistry (B2.1.14)
- Inspection of Internal Surfaces in Miscellaneous Piping and Ducting Components (B2.1.22)
- Selective Leaching of Materials (B2.1.17)

3.3.2.1.13 Diesel Generator Fuel Oil System

Materials

The materials of construction for the diesel generator fuel oil system component types are:

- Aluminum
- Carbon Steel
- Cast Iron

- Copper Alloy
- Stainless Steel

Environment

The diesel generator fuel oil system component types are exposed to the following environments:

- Atmosphere/ Weather
- Buried
- Fuel Oil
- Plant Indoor Air

Aging Effects Requiring Management

The following diesel generator fuel oil system aging effects require management:

- Loss of material
- Loss of preload

Aging Management Programs

The following aging management programs manage the aging effects for the diesel generator fuel oil system component types:

- Bolting Integrity (B2.1.7)
- Buried Piping and Tanks Inspection (B2.1.18)
- External Surfaces Monitoring Program (B2.1.20)
- Fuel Oil Chemistry (B2.1.14)
- Inspection of Internal Surfaces in Miscellaneous Piping and Ducting Components (B2.1.22)
- One-Time Inspection (B2.1.16)

3.3.2.1.14 Diesel Generator System

Materials

The materials of construction for the diesel generator system component types are:

- Aluminum

- Carbon Steel
- Cast Iron
- Copper Alloy
- Ductile Iron
- Glass
- Polyvinyl Chloride (PVC)
- Stainless Steel

Environment

The diesel generator system component types are exposed to the following environments:

- Closed-Cycle Cooling Water
- Diesel Exhaust
- Dry Gas
- Fuel Oil
- Lubricating Oil
- Plant Indoor Air

Aging Effects Requiring Management

The following diesel generator system aging effects require management:

- Cracking
- Loss of material
- Loss of preload
- Reduction of heat transfer

Aging Management Programs

The following aging management programs manage the aging effects for the diesel generator system component types:

- Bolting Integrity (B2.1.7)
- Closed-Cycle Cooling Water System (B2.1.10)

- External Surfaces Monitoring Program (B2.1.20)
- Fuel Oil Chemistry (B2.1.14)
- Inspection of Internal Surfaces in Miscellaneous Piping and Ducting Components (B2.1.22)
- Lubricating Oil Analysis (B2.1.23)
- One-Time Inspection (B2.1.16)

3.3.2.1.15 Lube Oil System

Materials

The materials of construction for the lube oil system component types are:

- Aluminum
- Carbon Steel
- Copper Alloy
- Glass
- Stainless Steel

Environment

The lube oil system component types are exposed to the following environments:

- Lubricating Oil
- Plant Indoor Air

Aging Effects Requiring Management

The following lube oil system aging effects require management:

- Loss of material
- Loss of preload

Aging Management Programs

The following aging management programs manage the aging effects for the lube oil system component types:

- Bolting Integrity (B2.1.7)

- External Surfaces Monitoring Program (B2.1.20)
- Lubricating Oil Analysis (B2.1.23)
- One-Time Inspection (B2.1.16)

3.3.2.1.16 Gaseous Radwaste System

Materials

The materials of construction for the gaseous radwaste system component types are:

- Carbon Steel
- Cast Iron
- Copper Alloy (> 15 percent Zinc)
- Glass
- Stainless Steel
- Stainless Steel Cast Austenitic

Environment

The gaseous radwaste system component types are exposed to the following environments:

- Closed-Cycle Cooling Water
- Dry Gas
- Plant Indoor Air
- Raw Water

Aging Effects Requiring Management

The following gaseous radwaste system aging effects require management:

- Loss of material
- Loss of preload

Aging Management Programs

The following aging management programs manage the aging effects for the gaseous radwaste system component types:

- Bolting Integrity (B2.1.7)
- Closed-Cycle Cooling Water System (B2.1.10)
- External Surfaces Monitoring Program (B2.1.20)
- Inspection of Internal Surfaces in Miscellaneous Piping and Ducting Components (B2.1.22)
- Selective Leaching of Materials (B2.1.17)

3.3.2.1.17 Liquid Radwaste System

Materials

The materials of construction for the liquid radwaste system component types are:

- Carbon Steel
- Carbon Steel (Galvanized)
- Carbon Steel with Elastomer Lining
- Cast Iron
- Copper Alloy
- Copper Alloy (> 15 percent Zinc)
- Ductile Iron
- Elastomer
- Glass
- Nickel-Alloys
- Stainless Steel
- Stainless Steel Cast Austenitic

Environment

The liquid radwaste system component types are exposed to the following environments:

- Borated Water Leakage
- Demineralized Water
- Dry Gas

- Encased in Concrete
- Lubricating Oil
- Plant Indoor Air
- Raw Water
- Secondary Water
- Treated Borated Water

Aging Effects Requiring Management

The following liquid radwaste system aging effects require management:

- Cracking
- Hardening and loss of strength
- Loss of material
- Loss of preload

Aging Management Programs

The following aging management programs manage the aging effects for the liquid radwaste system component types:

- Bolting Integrity (B2.1.7)
- Boric Acid Corrosion (B2.1.4)
- External Surfaces Monitoring Program (B2.1.20)
- Inspection of Internal Surfaces in Miscellaneous Piping and Ducting Components (B2.1.22)
- Lubricating Oil Analysis (B2.1.23)
- One-Time Inspection (B2.1.16)
- Selective Leaching of Materials (B2.1.17)
- Water Chemistry (B2.1.2)

3.3.2.1.18 Miscellaneous Systems In-Scope ONLY based on Criterion 10 CFR 54.4(a)(2)

Materials

The materials of construction for the miscellaneous systems in scope ONLY based on Criterion 10 CFR 54.4(a)(2) component types are:

- Carbon Steel
- Cast Iron
- Cast Iron (Gray Cast Iron)
- Copper Alloy
- Elastomer
- Glass
- Plexiglass
- Stainless Steel
- Stainless Steel Cast Austenitic

Environment

The miscellaneous systems in scope ONLY based on Criterion 10 CFR 54.4(a)(2) component types are exposed to the following environments:

- Atmosphere/ Weather
- Borated Water Leakage
- Closed-Cycle Cooling Water
- Demineralized Water
- Dry Gas
- Plant Indoor Air
- Raw Water
- Secondary Water
- Steam
- Treated Borated Water
- Ventilation Atmosphere

Aging Effects Requiring Management

The following miscellaneous systems in-scope ONLY based on Criterion 10 CFR 54.4(a)(2) aging effects require management:

- Cracking
- Hardening and loss of strength
- Loss of material
- Loss of preload

Aging Management Programs

The following aging management programs manage the aging effects for the miscellaneous systems in scope ONLY based on Criterion 10 CFR 54.4(a)(2) component types:

- Bolting Integrity (B2.1.7)
- Closed-Cycle Cooling Water System (B2.1.10)
- External Surfaces Monitoring Program (B2.1.20)
- Inspection of Internal Surfaces in Miscellaneous Piping and Ducting Components (B2.1.22)
- One-Time Inspection (B2.1.16)
- Selective Leaching of Materials (B2.1.17)
- Water Chemistry (B2.1.2)

3.3.2.2 Further Evaluation of Aging Management as Recommended by NUREG-1801

NUREG-1801 provides the basis for identifying those programs that warrant further evaluation. For the auxiliary systems, those evaluations are addressed in the following subsections.

3.3.2.2.1 Cumulative Fatigue Damage

Evaluation of cumulative fatigue damage of auxiliary system piping and heat exchangers, and the number of significant lifts assumed for design of fuel handling equipment is a TLAA as defined in 10 CFR 54.3. TLAAs are evaluated in accordance with 10 CFR 54.21(c)(1).

[3.3.1.01] Section 4.7.1 describes the evaluation of fuel handling equipment TLAAs.

[3.3.1.02] DCPP auxiliary system piping outside the reactor coolant pressure boundary is designed to ANSI B31.1 and B31.7, which assumes a reduction in the allowable secondary stress range if more than 7,000 full-range thermal cycles are expected in a design lifetime. Section 4.3.5 describes the evaluation of these cyclic design TLAAs.

The review identified no TLAAs supporting design of DCPP auxiliary system pressure vessels and heat exchangers. The design of DCPP auxiliary system pressure vessels and heat exchangers predate the thermal cycle design requirements of ASME Section VIII Division 2 Alternative Rules, ASME Section III Subsection NB (1971 and later), and ASME Section III Class B designed to NC 3200 (Alternate Design Rules for Vessels, 1974 Edition and later), therefore a TLAA does not exist.

3.3.2.2.2 Reduction of Heat Transfer due to Fouling

Not applicable to DCPP, applicable to BWR only.

3.3.2.2.3 Cracking due to Stress Corrosion Cracking (SCC)

3.3.2.2.3.1 Stainless steel piping and components of BWR standby liquid control system exposed to sodium pentaborate

Not applicable to DCPP, applicable to BWR only.

3.3.2.2.3.2 Stainless steel heat exchanger components exposed to treated water

Not applicable to DCPP, applicable to BWR only.

3.3.2.2.3.3 Stainless steel diesel engine exhaust piping and components exposed to diesel exhaust

The Inspection of Internal Surfaces in Miscellaneous Piping and Ducting Components program (B2.1.22) manages cracking from stress corrosion cracking for stainless steel internal surfaces exposed to diesel exhaust.

3.3.2.2.4 Cracking due to Stress Corrosion Cracking and Cyclic Loading

3.3.2.2.4.1 Stainless steel PWR non-regenerative heat exchanger components exposed to borated water

The Water Chemistry program (B2.1.2) and the One-Time Inspection program (B2.1.16) manage cracking due to stress corrosion cracking and cyclic loading for stainless steel letdown (non-regenerative) heat exchanger exposed to treated borated water. The one-time inspection will include selected components at susceptible locations.

Temperature and radioactivity of the shell-side water of the letdown (non-regenerative) heat exchanger is monitored continuously by installed plant instrumentation.

The One-Time Inspection program (B2.1.16) is selected in lieu of eddy-current testing of tubes to provide confirmation that cracking is not occurring. The continuous monitoring of temperature and radioactivity of the shell-side water together with one-time inspection will provide early indication of cracking in the letdown (non-regenerative) heat exchanger prior to the loss of intended function.

This position was found acceptable by the NRC staff in NUREG-1785, *Safety Evaluation Report Related to the License Renewal of H. B. Robinson Steam Electric Plant, Unit 2*.

3.3.2.2.4.2 Stainless steel PWR regenerative heat exchanger components exposed to borated water

The Water Chemistry program (B2.1.2) and the One-Time Inspection program (B2.1.16) manages cracking due to stress corrosion cracking and cyclic loading for stainless steel heat exchangers exposed to treated borated water. The one-time inspection will include selected components at susceptible locations.

3.3.2.2.4.3 Stainless steel pump casings in the chemical and volume control system

The Water Chemistry program (B2.1.2) and the One-Time Inspection program (B2.1.16) manages cracking due to stress corrosion cracking and cyclic loading for stainless steel pump casings exposed to treated borated water. The one-time inspection will include selected components at susceptible locations.

3.3.2.2.4.4 High strength bolting exposed to steam or water leakage

Not applicable. DCPP has no in-scope high-strength steel closure bolting exposed to air with steam or water leakage in the chemical and volume control system, so the applicable NUREG-1801 line was not used.

3.3.2.2.5 Hardening and Loss of Strength due to Elastomer Degradation

3.3.2.2.5.1 Elastomer seals of HVAC systems exposed to air-indoor (uncontrolled)

The External Surfaces Monitoring Program (B2.1.20) manages the hardening and loss of strength from elastomer degradation for elastomer external surfaces exposed to plant indoor air (uncontrolled) in locations where the ambient temperature cannot be shown to be less than 95º F.

The Inspection of Internal Surfaces in Miscellaneous Piping and Ducting program (B2.1.22) manages the hardening and loss of strength from elastomer degradation for elastomer internal surfaces exposed to ventilation atmosphere in locations where the ambient temperature cannot be shown to be less than 95º F.

In general, ambient temperature in HVAC equipment spaces is expected to be below 95º F. Below 95º F, thermal aging of elastomers is not considered significant (NUREG-1801, Chapter IX).

3.3.2.2.5.2 Elastomer linings in spent fuel pool cooling and cleanup systems

The Inspection of Internal Surfaces in Miscellaneous Piping and Ducting program (B2.1.22) manages the hardening and loss of strength from elastomer degradation for elastomer internal surfaces exposed to treated or treated borated water in the spent fuel pool cooling system and other auxiliary systems where the ambient temperature cannot be shown to be less than 95º F.

3.3.2.2.6 Reduction of Neutron-Absorbing Capacity and Loss of Material due to General Corrosion

Not applicable. DCPP uses soluble boron to maintain spent fuel pool subcriticality without crediting the negative reactivity of boron-absorbing panels as described in FSAR Section 9.1.2.3, so the applicable NUREG-1801 lines were not used.

3.3.2.2.7 Loss of Material due to General, Pitting, and Crevice Corrosion

3.3.2.2.7.1 Steel Stainless piping and components in the reactor coolant pump oil collection system exposed to lubricating oil

The Lubricating Oil Analysis program (B2.1.23) and the One-Time Inspection program (B2.1.16) manages loss of material due to general, pitting, and crevice corrosion for steel (including galvanized) exposed to lubricating oil. The one-time inspection includes selected components at susceptible locations where contaminants such as water could accumulate.

For the RCP lube oil collection system tank (within the liquid radioactive waste system), the Lubricating Oil Analysis program (B2.1.23) and the One-Time Inspection Program (B2.1.16) manages loss of material due to general, pitting, and crevice corrosion for steel (including galvanized steel) exposed to lubricating oil and the One-Time Inspection program (B2.1.16) evaluates the thickness of the lower portion of the tank.

3.3.2.2.7.2 Steel piping and components in BWR reactor water cleanup and shutdown cooling systems exposed to treated water

Not applicable to DCPP, applicable to BWR only.

3.3.2.2.7.3 Steel diesel exhaust piping and components exposed to diesel exhaust

The Inspection of Internal Surfaces in Miscellaneous Piping and Ducting Components program (B2.1.22) manages the loss of material from general, pitting, and crevice corrosion for carbon steel internal surfaces exposed to diesel exhaust.

3.3.2.2.8 Loss of Material due to General, Pitting, Crevice, and Microbiologically-Influenced Corrosion (MIC)

The Buried Piping and Tanks Inspection program (B2.1.18) manages the loss of material due to general, pitting, crevice and microbiologically-influenced corrosion for the carbon steel (including cast iron and ductile iron) external surfaces of buried components exposed to soil.

3.3.2.2.9 Loss of Material due to General, Pitting, Crevice, and Microbiologically-Influenced Corrosion and Fouling

3.3.2.2.9.1 Steel piping and components exposed to fuel oil

The Fuel Oil Chemistry program (B2.1.14) and the One-Time Inspection program (B2.1.16) manages loss of material due to general, pitting, crevice, microbiologically-influenced corrosion, and fouling for carbon steel components in the fuel oil system that is not abandoned-in-place. The one-time inspection includes selected components at susceptible locations where contaminants could accumulate (e.g. stagnant flow locations and tank bottoms).

A different aging management program is credited for abandoned-in-place piping and components in the auxiliary steam system. The aging of internal component surfaces exposed to the fuel oil environment of the abandoned-in-place portions of the auxiliary steam system is managed by Inspection of Internal Surfaces in Miscellaneous Piping and Ducting Components program (B2.1.22).

3.3.2.2.9.2 Steel heat exchanger components exposed to lubricating oil

The Lubricating Oil Analysis program (B2.1.23) and the One-Time Inspection program (B2.1.16) manages loss of material due to general, pitting, crevice, and microbiologically influenced corrosion and fouling for carbon steel components exposed to lubricating oil. The one-time inspection includes selected components at susceptible locations where contaminants such as water could accumulate.

3.3.2.2.10 Loss of Material due to Pitting and Crevice Corrosion

3.3.2.2.10.1 Elastomer lined and stainless steel clad components exposed to treated or treated borated water

Not applicable. DCPP has no in-scope components constructed of steel with elastomer lining exposed to treated or treated borated water in the spent fuel pool cooling system, so the applicable NUREG-1801 lines were not used.

3.3.2.2.10.2 Stainless steel, aluminum, and stainless steel clad heat exchanger components exposed to treated water

Not applicable to DCPP, applicable to BWR only.

3.3.2.2.10.3 Copper alloy HVAC piping and components exposed to condensation (external)

The External Surfaces Monitoring Program (B2.1.20) manages the loss of material from pitting and crevice corrosion for copper alloy external surfaces exposed to ventilation atmosphere.

The Inspection of Internal Surfaces in Miscellaneous Piping and Ducting Components program (B2.1.22) manages the loss of material from pitting and crevice corrosion for copper alloy internal surfaces exposed to ventilation atmosphere.

3.3.2.2.10.4 Copper alloy piping and components exposed to lubricating oil

The Lubricating Oil analysis program (B2.1.23) and the One-Time Inspection program (B2.1.16) manages loss of material due to pitting and crevice corrosion for copper, bronze, and brass components exposed to lubricating oil. The one-time inspection includes selected components at susceptible locations where contaminants such as water could accumulate.

3.3.2.2.10.5 HVAC aluminum piping and components and stainless steel ducting and components exposed to condensation

The Inspection of Internal Surfaces in Miscellaneous Piping and Ducting Components program (B2.1.22) manages the loss of material from pitting and crevice corrosion for stainless steel internal surfaces exposed to ventilation atmosphere and condensation.

3.3.2.2.10.6 Copper alloy piping and components exposed to internal condensation

The Inspection of Internal Surfaces in Miscellaneous Piping and Ducting Components program (B2.1.22) manages loss of material from pitting and crevice corrosion for copper alloy internal surfaces exposed to internal condensation and moisture.

3.3.2.2.10.7 Stainless steel piping and components exposed to soil

The Buried Piping and Tanks Inspection program (B2.1.18) manages loss of material due to pitting and crevice corrosion for the stainless steel external surfaces of buried components exposed to soil.

3.3.2.2.10.8 Stainless steel piping and components of BWR standby liquid control system exposed to sodium pentaborate

Not applicable to DCPP, applicable to BWR only.

3.3.2.2.11 Loss of Material due to Pitting, Crevice, and Galvanic Corrosion

Not applicable to DCPP, applicable to BWR only.

3.3.2.2.12 Loss of Material due to Pitting, Crevice, and Microbiologically-Influenced Corrosion

3.3.2.2.12.1 Stainless steel, aluminum, and copper alloy piping and components exposed to fuel oil

The Fuel Oil Chemistry program (B2.1.14) and the One-Time Inspection program (B2.1.16) manages loss of material due to pitting, crevice and microbiologically-influenced corrosion for stainless steel, aluminum and copper components exposed to fuel oil that are not abandoned-in-place. The one-time inspection includes selected components at susceptible locations where contaminants could accumulate (e.g. stagnant flow locations).

A different aging management program is credited for abandoned-in-place piping and components in the auxiliary steam system. The aging of internal surfaces exposed to the fuel oil environment of the abandoned-in-place portions of the auxiliary steam system is managed by Inspection of Internal Surfaces in Miscellaneous Piping and Ducting Components program (B2.1.22).

3.3.2.2.12.2 Stainless steel piping and components exposed to lubricating oil

The Lubricating Oil Analysis program (B2.1.23) and the One-Time Inspection program (B2.1.16) manages loss of material due to pitting, crevice, and microbiologically-influenced corrosion for stainless steel components exposed to lubricating oil. The one-time inspection includes selected components at susceptible locations where contaminants such as water could accumulate.

3.3.2.2.13 Loss of Material due to Wear

The External Surfaces Monitoring Program (B2.1.20) monitors the external surfaces of elastomer components for evidence of loss of material due to wear.

The Inspection of Internal Surfaces in Miscellaneous Piping and Ducting Components program (B2.1.22) monitors the internal surfaces of elastomer components for evidence of loss of material due to wear.

3.3.2.2.14 Loss of Material due to Cladding Breach

The Water Chemistry program (B2.1.2) and the One-Time Inspection program (B2.1.16) manage loss of material due to cladding breach for steel clad with stainless steel pump casings exposed to treated borated water. The one-time inspection includes each of the affected components and will address the full internal cladding surface exposed to treated borated water.

NRC Information Notice 80-38 and Information Notice 94-63 address loss of material due to cladding breach for CVCS pumps fabricated of steel with stainless steel cladding. DCPP identifies pumps CCP 1-1 and CCP 2-2 as fabricated of steel with stainless steel cladding. NRC Information Notice 80-38 advises that the condition presents a "potential source of degradation over long term operations" and recommends a "non-destructive examination of this pump type." Information Notice 94-63 provides additional information about the condition described based on the analysis of industry operating experience and concludes that "corrosion of the base metal due to cladding cracks is usually relatively easy to identify through visual inspection". The One-Time Inspection program (B2.1.16) provides a non-destructive

visual examination consistent with the guidance of Information Notice 80-38 and 94-63.

Prior to the period of extended operation, DCPP will replace the current carbon steel with stainless steel clad CCP 1-1 and 2-2 pump casings with completely stainless steel pump casings.

3.3.2.2.15 Quality Assurance for Aging Management of Nonsafety-Related Components

Quality Assurance Program and Administrative Controls are discussed in Section B1.3.

3.3.2.3 Time-Limited Aging Analysis

The time-limited aging analyses identified below are associated with the auxiliary systems components. The section of Chapter 4 that contains the TLAA review results is indicated in parenthesis.

- Cumulative Fatigue Damage (Section 4.3, Metal Fatigue Analysis)
- Crane Load Cycle Limits (Section 4.7.1, Crane Cycle Load Limits)

3.3.3 Conclusions

The auxiliary systems component types that are subject to AMR have been evaluated. The aging management programs selected to manage the aging effects for the auxiliary systems component types are identified in the summary Tables and in Section 3.3.2.1.

A description of these aging management programs is provided in Appendix B, along with a demonstration that the identified aging effects will be managed for the period of extended operation.

Therefore, based on the demonstration provided in Appendix B, the effects of aging associated with the auxiliary systems component types will be adequately managed so that there is reasonable assurance that the intended functions will be maintained consistent with the current licensing basis during the period of extended operation.

Table 3.3.1 Summary of Aging Management Evaluations in Chapter VII of NUREG-1801 for Auxiliary Systems

Item Number	Component Type	Aging Effect / Mechanism	Aging Management Program	Further Evaluation Recommended	Discussion
3.3.1.01	Steel cranes - structural girders exposed to air – indoor uncontrolled (external)	Cumulative fatigue damage	TLAA to be evaluated for structural girders of cranes. See the Standard Review Plan, Section 4.7 for generic guidance for meeting the requirements of 10 CFR 54.21(c)(1).	Yes, TLAA	Fatigue of metal components is a TLAA. See further evaluation in Section 3.3.2.2.1.
3.3.1.02	Steel and stainless steel piping, piping components, piping elements, and heat exchanger components exposed to air – indoor uncontrolled, treated borated water or treated water	Cumulative fatigue damage	TLAA, evaluated in accordance with 10 CFR 54.21(c)	Yes, TLAA	Fatigue of metal components is a TLAA. See further evaluation in Section 3.3.2.2.1.
3.3.1.03					Not applicable - BWR only
3.3.1.04					Not applicable - BWR only
3.3.1.05					Not applicable - BWR only

Table 3.3.1 Summary of Aging Management Evaluations in Chapter VII of NUREG-1801 for Auxiliary Systems (Continued)

Item Number	Component Type	Aging Effect / Mechanism	Aging Management Program	Further Evaluation Recommended	Discussion
3.3.1.06	Stainless steel diesel engine exhaust piping, piping components, and piping elements exposed to diesel exhaust	Cracking due to stress corrosion cracking	A plant specific aging management program is to be evaluated.	Yes	Consistent with NUREG-1801. The plant-specific aging management program(s) used to manage the aging include: Inspection of Internal Surfaces in Miscellaneous Piping and Ducting Components (B2.1.22). See further evaluation in Section 3.3.2.2.3.3.

Table 3.3.1 Summary of Aging Management Evaluations in Chapter VII of NUREG-1801 for Auxiliary Systems (Continued)

Item Number	Component Type	Aging Effect / Mechanism	Aging Management Program	Further Evaluation Recommended	Discussion
3.3.1.07	Stainless steel non-regenerative heat exchanger components exposed to treated borated water >60° C (>140° F)	Cracking due to stress corrosion cracking and cyclic loading	Water Chemistry (B2.1.2) and a plant-specific verification program. An acceptable verification program is to include temperature and radioactivity monitoring of the shell side water, and eddy current testing of tubes.	Yes	Consistent with NUREG-1801. The plant-specific aging management program(s) used to manage the aging include: Water Chemistry (B2.1.2) and One-Time Inspection (B2.1.16). Temperature and radioactivity of shell-side water are monitored continuously by installed plant instrumentation. See further evaluation in Section 3.3.2.2.4.1.
3.3.1.08	Stainless steel regenerative heat exchanger components exposed to treated borated water >60° C (>140° F)	Cracking due to stress corrosion cracking and cyclic loading	Water Chemistry (B2.1.2) and a plant-specific verification program. The AMP is to be augmented by verifying the absence of cracking due to stress corrosion cracking and cyclic loading. A plant specific aging management program is to be evaluated.	Yes	Consistent with NUREG-1801. The plant-specific aging management program(s) used to manage the aging include: Water Chemistry (B2.1.2) and One-Time Inspection (B2.1.16). See further evaluation in Section 3.3.2.2.4.2.

Table 3.3.1 Summary of Aging Management Evaluations in Chapter VII of NUREG-1801 for Auxiliary Systems (Continued)

Item Number	Component Type	Aging Effect / Mechanism	Aging Management Program	Further Evaluation Recommended	Discussion
3.3.1.09	Stainless steel high-pressure pump casing in PWR chemical and volume control system	Cracking due to stress corrosion cracking and cyclic loading	Water Chemistry (B2.1.2) and a plant-specific verification program. The AMP is to be augmented by verifying the absence of cracking due to stress corrosion cracking and cyclic loading. A plant specific aging management program is to be evaluated.	Yes	Consistent with NUREG-1801. The plant-specific aging management program(s) used to manage the aging include: Water Chemistry (B2.1.2) and One-Time Inspection (B2.1.16). See further evaluation in Section 3.3.2.2.4.3.
3.3.1.10	High-strength steel closure bolting exposed to air with steam or water leakage.	Cracking due to stress corrosion cracking, cyclic loading	Bolting Integrity (B2.1.7). The AMP is to be augmented by appropriate inspection to detect cracking if the bolts are not otherwise replaced during maintenance.	Yes	Not applicable. DCPP has no in-scope high-strength steel closure bolting exposed to air with steam or water leakage in the chemical and volume control system, so the applicable NUREG-1801 line was not used. See further evaluation in Section 3.3.2.2.4.4.

Table 3.3.1 Summary of Aging Management Evaluations in Chapter VII of NUREG-1801 for Auxiliary Systems (Continued)

Item Number	Component Type	Aging Effect / Mechanism	Aging Management Program	Further Evaluation Recommended	Discussion
3.3.1.11	Elastomer seals and components exposed to air – indoor uncontrolled (internal/external)	Hardening and loss of strength due to elastomer degradation	A plant specific aging management program is to be evaluated.	Yes	Consistent with NUREG-1801. The plant-specific aging management programs used to manage aging include Inspection of Internal Surfaces in Miscellaneous Piping and Ducting Components (B2.1.22) for internal surface exposure and External Surfaces Monitoring (B2.1.20) for external surface exposure. See further evaluation in Section 3.3.2.2.5.1.
3.3.1.12	Elastomer lining exposed to treated water or treated borated water	Hardening and loss of strength due to elastomer degradation	A plant-specific aging management program is to be evaluated.	Yes	Consistent with NUREG-1801. The plant-specific aging management program(s) used to manage the aging include: Inspection of Internal Surfaces in Miscellaneous Piping and Ducting Components (B2.1.22). See further evaluation in Section 3.3.2.2.5.2.

Table 3.3.1 Summary of Aging Management Evaluations in Chapter VII of NUREG-1801 for Auxiliary Systems (Continued)

Item Number	Component Type	Aging Effect / Mechanism	Aging Management Program	Further Evaluation Recommended	Discussion
3.3.1.13	Boral, boron steel spent fuel storage racks neutron-absorbing sheets exposed to treated water or treated borated water	Reduction of neutron-absorbing capacity and loss of material due to general corrosion	A plant specific aging management program is to be evaluated.	Yes	Not applicable. DCPP uses soluble boron to maintain spent fuel pool subcriticality without crediting the negative reactivity of boron-absorbing panels as described in FSAR Section 9.1.2.3, so the applicable NUREG-1801 lines were not used. See further evaluation in Section 3.3.2.2.6.
3.3.1.14	Steel piping, piping component, and piping elements exposed to lubricating oil	Loss of material due to general, pitting, and crevice corrosion	Lubricating Oil Analysis (B2.1.23) and One-Time Inspection (B2.1.16)	Yes	Consistent with NUREG-1801 with aging management program exceptions. The aging management program(s) with exceptions to NUREG-1801 include: Lubricating Oil Analysis (B2.1.23). See further evaluation in Section 3.3.2.2.7.1.

Table 3.3.1 Summary of Aging Management Evaluations in Chapter VII of NUREG-1801 for Auxiliary Systems (Continued)

Item Number	Component Type	Aging Effect / Mechanism	Aging Management Program	Further Evaluation Recommended	Discussion
3.3.1.15	Steel reactor coolant pump oil collection system piping, tubing, and valve bodies exposed to lubricating oil	Loss of material due to general, pitting, and crevice corrosion	Lubricating Oil Analysis (B2.1.23) and One-Time Inspection (B2.1.16)	Yes	Consistent with NUREG-1801 with aging management program exceptions. The aging management program(s) with exceptions to NUREG-1801 include: Lubricating Oil Analysis (B2.1.23). See further evaluation in Section 3.3.2.2.7.1.
3.3.1.16	Steel reactor coolant pump oil collection system tank exposed to lubricating oil	Loss of material due to general, pitting, and crevice corrosion	Lubricating Oil Analysis (B2.1.23) and One-Time Inspection (B2.1.16) to evaluate the thickness of the lower portion of the tank	Yes	Consistent with NUREG-1801 with aging management program exceptions. The aging management program(s) with exceptions to NUREG-1801 include: Lubricating Oil Analysis (B2.1.23). See further evaluation in Section 3.3.2.2.7.1.
3.3.1.17					Not applicable - BWR only

Table 3.3.1 Summary of Aging Management Evaluations in Chapter VII of NUREG-1801 for Auxiliary Systems (Continued)

Item Number	Component Type	Aging Effect / Mechanism	Aging Management Program	Further Evaluation Recommended	Discussion
3.3.1.18	Stainless steel and steel diesel engine exhaust piping, piping components, and piping elements exposed to diesel exhaust	Loss of material/ general (steel only), pitting and crevice corrosion	A plant specific aging management program is to be evaluated.	Yes	Consistent with NUREG-1801. The plant-specific aging management program(s) used to manage the aging include: Inspection of Internal Surfaces in Miscellaneous Piping and Ducting Components (B2.1.22). See further evaluation in Section 3.3.2.2.7.3.
3.3.1.19	Steel (with or without coating or wrapping) piping, piping components, and piping elements exposed to soil	Loss of material due to general, pitting, crevice, and microbiologically influenced corrosion	Buried Piping and Tanks Inspection (B2.1.18)	Yes	Consistent with NUREG-1801 with aging management program exceptions. The aging management program(s) with exceptions to NUREG-1801 include: Buried Piping and Tanks Inspection (B2.1.18). See further evaluation in Section 3.3.2.2.8.

Table 3.3.1 Summary of Aging Management Evaluations in Chapter VII of NUREG-1801 for Auxiliary Systems (Continued)

Item Number	Component Type	Aging Effect / Mechanism	Aging Management Program	Further Evaluation Recommended	Discussion
3.3.1.20	Steel piping, piping components, piping elements, and tanks exposed to fuel oil	Loss of material due to general, pitting, crevice, and microbiologically influenced corrosion, and fouling	Fuel Oil Chemistry (B2.1.14) and One-Time Inspection (B2.1.16)	Yes	Consistent with NUREG-1801 for all non-abandoned-in-place components with aging management program exceptions: The aging management program(s) with exceptions to NUREG-1801 include Fuel Oil Chemistry (B2.1.14). However, a different aging management program is credited for abandoned-in-place components in the auxiliary steam system. The aging of abandoned-in-place components are managed by Inspection of Internal Surfaces in Miscellaneous Piping and Ducting Components (B2.1.22). See further evaluation in Section 3.3.2.2.9.1.

Table 3.3.1 Summary of Aging Management Evaluations in Chapter VII of NUREG-1801 for Auxiliary Systems (Continued)

Item Number	Component Type	Aging Effect / Mechanism	Aging Management Program	Further Evaluation Recommended	Discussion
3.3.1.21	Steel heat exchanger components exposed to lubricating oil	Loss of material due to general, pitting, crevice, and microbiologically influenced corrosion, and fouling	Lubricating Oil Analysis (B2.1.23) and One-Time Inspection (B2.1.16)	Yes	Consistent with NUREG-1801 with aging management program exceptions. The aging management program(s) with exceptions to NUREG-1801 include: Lubricating Oil Analysis (B2.1.23). See further evaluation in Section 3.3.2.2.9.2.
3.3.1.22	Steel with elastomer lining or stainless steel cladding piping, piping components, and piping elements exposed to treated water and treated borated water	Loss of material due to pitting and crevice corrosion (only for steel after lining/cladding degradation)	Water Chemistry (B2.1.2) and One-Time Inspection (B2.1.16)	Yes	Not applicable. DCPP has no in-scope components constructed of steel with elastomer lining exposed to treated or treated borated water in the fuel pool cooling and clean-up system, so the applicable NUREG-1801 lines were not used. See further evaluation in Section 3.3.2.2.10.1.
3.3.1.23					Not applicable - BWR only
3.3.1.24					Not applicable - BWR only

Table 3.3.1 Summary of Aging Management Evaluations in Chapter VII of NUREG-1801 for Auxiliary Systems (Continued)

Item Number	Component Type	Aging Effect / Mechanism	Aging Management Program	Further Evaluation Recommended	Discussion
3.3.1.25	Copper alloy HVAC piping, piping components, piping elements exposed to condensation (external)	Loss of material due to pitting and crevice corrosion	A plant-specific aging management program is to be evaluated.	Yes	Consistent with NUREG-1801. The plant-specific aging management programs used to manage aging include Inspection of Internal Surfaces in Miscellaneous Piping and Ducting Components (B2.1.22) for internal surface exposure and External Surfaces Monitoring (B2.1.20) for external surface exposure. See further evaluation in Section 3.3.2.2.10.3.
3.3.1.26	Copper alloy piping, piping components, and piping elements exposed to lubricating oil	Loss of material due to pitting and crevice corrosion	Lubricating Oil Analysis (B2.1.23) and One-Time Inspection (B2.1.16)	Yes	Consistent with NUREG-1801 with aging management program exceptions. The aging management program(s) with exceptions to NUREG-1801 include: Lubricating Oil Analysis (B2.1.23). See further evaluation in Section 3.3.2.2.10.4.

Table 3.3.1 Summary of Aging Management Evaluations in Chapter VII of NUREG-1801 for Auxiliary Systems (Continued)

Item Number	Component Type	Aging Effect / Mechanism	Aging Management Program	Further Evaluation Recommended	Discussion
3.3.1.27	Stainless steel HVAC ducting and aluminum HVAC piping, piping components and piping elements exposed to condensation	Loss of material due to pitting and crevice corrosion	A plant-specific aging management program is to be evaluated.	Yes	Consistent with NUREG-1801. The plant-specific aging management program(s) used to manage the aging include: Inspection of Internal Surfaces in Miscellaneous Piping and Ducting Components (B2.1.22). See further evaluation in Section 3.3.2.2.10.5.
3.3.1.28	Copper alloy fire protection piping, piping components, and piping elements exposed to condensation (internal)	Loss of material due to pitting and crevice corrosion	A plant-specific aging management program is to be evaluated.	Yes	Consistent with NUREG-1801. The plant-specific aging management program(s) used to manage the aging include: Inspection of Internal Surfaces in Miscellaneous Piping and Ducting Components (B2.1.22). See further evaluation in Section 3.3.2.2.10.6.

Table 3.3.1 Summary of Aging Management Evaluations in Chapter VII of NUREG-1801 for Auxiliary Systems (Continued)

Item Number	Component Type	Aging Effect / Mechanism	Aging Management Program	Further Evaluation Recommended	Discussion
3.3.1.29	Stainless steel piping, piping components, and piping elements exposed to soil	Loss of material due to pitting and crevice corrosion	A plant-specific aging management program is to be evaluated.	Yes	Consistent with NUREG-1801. The plant-specific aging management program(s) used to manage the aging include: Buried Piping and Tanks Inspection (B2.1.18). See further evaluation in Section 3.3.2.2.10.7.
3.3.1.30					Not applicable - BWR only
3.3.1.31					Not applicable - BWR only

Table 3.3.1 Summary of Aging Management Evaluations in Chapter VII of NUREG-1801 for Auxiliary Systems (Continued)

Item Number	Component Type	Aging Effect / Mechanism	Aging Management Program	Further Evaluation Recommended	Discussion
3.3.1.32	Stainless steel, aluminum and copper alloy piping, piping components, and piping elements exposed to fuel oil	Loss of material due to pitting, crevice, and microbiologically influenced corrosion	Fuel Oil Chemistry (B2.1.14) and One-Time Inspection (B2.1.16)	Yes	Consistent with NUREG-1801 for all non-abandoned-in-place components with aging management program exceptions: The aging management program(s) with exceptions to NUREG-1801 includes Fuel Oil Chemistry (B2.1.14). However, a different aging management program is credited for abandoned-in-place components in the auxiliary steam system. The aging of abandoned-in-place components will be managed by Inspection of Internal Surfaces in Miscellaneous Piping and Ducting Components (B2.1.22). See further evaluation in Section 3.3.2.2.12.1.

Table 3.3.1 Summary of Aging Management Evaluations in Chapter VII of NUREG-1801 for Auxiliary Systems (Continued)

Item Number	Component Type	Aging Effect / Mechanism	Aging Management Program	Further Evaluation Recommended	Discussion
3.3.1.33	Stainless steel piping, piping components, and piping elements exposed to lubricating oil	Loss of material due to pitting, crevice, and microbiologically influenced corrosion	Lubricating Oil Analysis (B2.1.23) and One-Time Inspection (B2.1.16)	Yes	Consistent with NUREG-1801 with aging management program exceptions. The aging management program(s) with exceptions to NUREG-1801 include: Lubricating Oil Analysis (B2.1.23). See further evaluation in Section 3.3.2.2.12.2.

Table 3.3.1 Summary of Aging Management Evaluations in Chapter VII of NUREG-1801 for Auxiliary Systems (Continued)

Item Number	Component Type	Aging Effect / Mechanism	Aging Management Program	Further Evaluation Recommended	Discussion
3.3.1.34	Elastomer seals and components exposed to air – indoor uncontrolled (internal or external)	Loss of material due to Wear	A plant specific aging management program is to be evaluated.	Yes	Consistent with NUREG-1801. The plant-specific aging management program(s) used to manage the surfaces of elastomer components exposed to air - indoor uncontrolled for loss of material due to wear are External Surfaces Monitoring Program (B2.1.20) for external surfaces and Inspection of Internal Surfaces in Miscellaneous Piping and Ducting Components Program (B2.1.22) for internal surfaces. See further evaluation in Section 3.3.2.2.13.

Table 3.3.1 Summary of Aging Management Evaluations in Chapter VII of NUREG-1801 for Auxiliary Systems (Continued)

Item Number	Component Type	Aging Effect / Mechanism	Aging Management Program	Further Evaluation Recommended	Discussion
3.3.1.35	Steel with stainless steel cladding pump casing exposed to treated borated water	Loss of material due to cladding breach	A plant-specific aging management program is to be evaluated. Reference NRC Information Notice 94-63, *Boric Acid Corrosion of Charging Pump Casings Caused by Cladding Cracks*.	Yes	Consistent with NUREG-1801. The plant-specific aging management program(s) used to manage the aging include: Water Chemistry (B2.1.2) and One-Time Inspection (B2.1.16). See further evaluation in Section 3.3.2.2.14.
3.3.1.36					Not applicable - BWR only
3.3.1.37					Not applicable - BWR only
3.3.1.38					Not applicable - BWR only
3.3.1.39					Not applicable - BWR only
3.3.1.40	Steel tanks in diesel fuel oil system exposed to air - outdoor (external)	Loss of material due to general, pitting, and crevice corrosion	Aboveground Steel Tanks	No	Not applicable. Other available applicable NUREG-1801 lines were used for the extension of the buried fuel oil storage tank that extends above ground to accommodate the access port (manhole) as shown on the plant drawings.

Table 3.3.1 Summary of Aging Management Evaluations in Chapter VII of NUREG-1801 for Auxiliary Systems (Continued)

Item Number	Component Type	Aging Effect / Mechanism	Aging Management Program	Further Evaluation Recommended	Discussion
3.3.1.41	High-strength steel closure bolting exposed to air with steam or water leakage	Cracking due to cyclic loading, stress corrosion cracking	Bolting Integrity (B2.1.7)	No	Not applicable. DCPP has no in-scope high-strength steel closure bolting in auxiliary systems, so the applicable NUREG-1801 line was not used.
3.3.1.42	Steel closure bolting exposed to air with steam or water leakage	Loss of material due to general corrosion	Bolting Integrity (B2.1.7)	No	Not applicable. DCPP has no in-scope steel closure bolting exposed to air with steam or water leakage in auxiliary systems, so the applicable NUREG-1801 line was not used.
3.3.1.43	Steel bolting and closure bolting exposed to air – indoor uncontrolled (external) or air – outdoor (External)	Loss of material due to general, pitting, and crevice corrosion	Bolting Integrity (B2.1.7)	No	Consistent with NUREG-1801 with aging management program exceptions. The aging management program(s) with exceptions to NUREG-1801 include: Bolting Integrity (B2.1.7)

Table 3.3.1 Summary of Aging Management Evaluations in Chapter VII of NUREG-1801 for Auxiliary Systems (Continued)

Item Number	Component Type	Aging Effect / Mechanism	Aging Management Program	Further Evaluation Recommended	Discussion
3.3.1.44	Steel compressed air system closure bolting exposed to condensation	Loss of material due to general, pitting, and crevice corrosion	Bolting Integrity (B2.1.7)	No	Not applicable. DCPP has no in-scope steel closure bolting exposed to condensation in the compressed air system, so the applicable NUREG-1801 line was not used.
3.3.1.45	Steel closure bolting exposed to air – indoor uncontrolled (external)	Loss of preload due to thermal effects, gasket creep, and self-loosening	Bolting Integrity (B2.1.7)	No	Consistent with NUREG-1801 with aging management program exceptions. The aging management program(s) with exceptions to NUREG-1801 include: Bolting Integrity (B2.1.7)
3.3.1.46	Stainless steel and stainless clad steel piping, piping components, piping elements, and heat exchanger components exposed to closed cycle cooling water >60°C (>140°F)	Cracking due to stress corrosion cracking	Closed-Cycle Cooling Water System (B2.1.10)	No	Consistent with NUREG-1801 with aging management program exceptions. The aging management program(s) with exceptions to NUREG-1801 include: Closed-Cycle Cooling Water System (B2.1.10)

Table 3.3.1 Summary of Aging Management Evaluations in Chapter VII of NUREG-1801 for Auxiliary Systems (Continued)

Item Number	Component Type	Aging Effect / Mechanism	Aging Management Program	Further Evaluation Recommended	Discussion
3.3.1.47	Steel piping, piping components, piping elements, tanks, and heat exchanger components exposed to closed cycle cooling water	Loss of material due to general, pitting, and crevice corrosion	Closed-Cycle Cooling Water System (B2.1.10)	No	Consistent with NUREG-1801 with aging management program exceptions. The aging management program(s) with exceptions to NUREG-1801 include: Closed-Cycle Cooling Water System (B2.1.10)
3.3.1.48	Steel piping, piping components, piping elements, tanks, and heat exchanger components exposed to closed cycle cooling water	Loss of material due to general, pitting, crevice, and galvanic corrosion	Closed-Cycle Cooling Water System (B2.1.10)	No	Consistent with NUREG-1801 with aging management program exceptions. The aging management program(s) with exceptions to NUREG-1801 include: Closed-Cycle Cooling Water System (B2.1.10)
3.3.1.49					Not applicable - BWR only

Table 3.3.1 Summary of Aging Management Evaluations in Chapter VII of NUREG-1801 for Auxiliary Systems (Continued)

Item Number	Component Type	Aging Effect / Mechanism	Aging Management Program	Further Evaluation Recommended	Discussion
3.3.1.50	Stainless steel piping, piping components, and piping elements exposed to closed cycle cooling water	Loss of material due to pitting and crevice corrosion	Closed-Cycle Cooling Water System (B2.1.10)	No	Consistent with NUREG-1801 with aging management program exceptions. The aging management program(s) with exceptions to NUREG-1801 include: Closed-Cycle Cooling Water System (B2.1.10)
3.3.1.51	Copper alloy piping, piping components, piping elements, and heat exchanger components exposed to closed cycle cooling water	Loss of material due to pitting, crevice, and galvanic corrosion	Closed-Cycle Cooling Water System (B2.1.10)	No	Consistent with NUREG-1801 with aging management program exceptions. The aging management program(s) with exceptions to NUREG-1801 include: Closed-Cycle Cooling Water System (B2.1.10)
3.3.1.52	Steel, stainless steel, and copper alloy heat exchanger tubes exposed to closed cycle cooling water	Reduction of heat transfer due to fouling	Closed-Cycle Cooling Water System (B2.1.10)	No	Consistent with NUREG-1801 with aging management program exceptions. The aging management program(s) with exceptions to NUREG-1801 include: Closed-Cycle Cooling Water System (B2.1.10)

Table 3.3.1 Summary of Aging Management Evaluations in Chapter VII of NUREG-1801 for Auxiliary Systems (Continued)

Item Number	Component Type	Aging Effect / Mechanism	Aging Management Program	Further Evaluation Recommended	Discussion
3.3.1.53	Steel compressed air system piping, piping components, and piping elements exposed to condensation (internal)	Loss of material due to general and pitting corrosion	Compressed Air Monitoring	No	Consistent with NUREG-1801 for material, environment, and aging effect, but a different aging management program Inspection of Internal Surfaces in Miscellaneous Piping and Ducting Components (B2.1.22) is credited.
3.3.1.54	Stainless steel compressed air system piping, piping components, and piping elements exposed to internal condensation	Loss of material due to pitting and crevice corrosion	Compressed Air Monitoring	No	Consistent with NUREG-1801 for material, environment, and aging effect, but a different aging management program Inspection of Internal Surfaces in Miscellaneous Piping and Ducting Components (B2.1.22) is credited.

Table 3.3.1 Summary of Aging Management Evaluations in Chapter VII of NUREG-1801 for Auxiliary Systems (Continued)

Item Number	Component Type	Aging Effect / Mechanism	Aging Management Program	Further Evaluation Recommended	Discussion
3.3.1.55	Steel ducting closure bolting exposed to air – indoor uncontrolled (external)	Loss of material due to general corrosion	External Surfaces Monitoring (B2.1.20)	No	Consistent with NUREG-1801 with aging management program exceptions. The aging management program(s) with exceptions to NUREG-1801 include: External Surfaces Monitoring Program (B2.1.20)
3.3.1.56	Steel HVAC ducting and components external surfaces exposed to air – indoor uncontrolled (external)	Loss of material due to general corrosion	External Surfaces Monitoring (B2.1.20)	No	Consistent with NUREG-1801 with aging management program exceptions. The aging management program(s) with exceptions to NUREG-1801 include: External Surfaces Monitoring Program (B2.1.20)
3.3.1.57	Steel piping and components external surfaces exposed to air – indoor uncontrolled (External)	Loss of material due to general corrosion	External Surfaces Monitoring (B2.1.20)	No	Consistent with NUREG-1801 with aging management program exceptions. The aging management program(s) with exceptions to NUREG-1801 include: External Surfaces Monitoring Program (B2.1.20)

Table 3.3.1 Summary of Aging Management Evaluations in Chapter VII of NUREG-1801 for Auxiliary Systems (Continued)

Item Number	Component Type	Aging Effect / Mechanism	Aging Management Program	Further Evaluation Recommended	Discussion
3.3.1.58	Steel external surfaces exposed to air – indoor uncontrolled (external), air - outdoor (external), and condensation (external)	Loss of material due to general corrosion	External Surfaces Monitoring (B2.1.20)	No	Consistent with NUREG-1801 with aging management program exceptions for all components except for the Intake Structure Gantry Crane: The aging management program(s) with exceptions to NUREG-1801 includes External Surfaces Monitoring Program (B2.1.20). A different aging management program is credited for the Intake Structure Gantry Crane in the cranes and fuel handling system. The aging of the Intake Structure Gantry Crane will be managed by Inspection Of Overhead Heavy Load and Light Load (Related to Refueling) Handling Systems (B2.1.11).

Table 3.3.1 Summary of Aging Management Evaluations in Chapter VII of NUREG-1801 for Auxiliary Systems (Continued)

Item Number	Component Type	Aging Effect / Mechanism	Aging Management Program	Further Evaluation Recommended	Discussion
3.3.1.59	Steel heat exchanger components exposed to air – indoor uncontrolled (external) or air -outdoor (external)	Loss of material due to general, pitting, and crevice corrosion	External Surfaces Monitoring (B2.1.20)	No	Consistent with NUREG-1801 with aging management program exceptions. The aging management program(s) with exceptions to NUREG-1801 include: External Surfaces Monitoring Program (B2.1.20)
3.3.1.60	Steel piping, piping components, and piping elements exposed to air - outdoor (external)	Loss of material due to general, pitting, and crevice corrosion	External Surfaces Monitoring (B2.1.20)	No	Consistent with NUREG-1801 with aging management program exceptions. The aging management program(s) with exceptions to NUREG-1801 include: External Surfaces Monitoring Program (B2.1.20)
3.3.1.61	Elastomer fire barrier penetration seals exposed to air – outdoor or air - indoor uncontrolled	Increased hardness, shrinkage and loss of strength due to weathering	Fire Protection (B2.1.12)	No	Consistent with NUREG-1801 with aging management program exceptions. The aging management program(s) with exceptions to NUREG-1801 include: Fire Protection (B2.1.12)

Table 3.3.1 Summary of Aging Management Evaluations in Chapter VII of NUREG-1801 for Auxiliary Systems (Continued)

Item Number	Component Type	Aging Effect / Mechanism	Aging Management Program	Further Evaluation Recommended	Discussion
3.3.1.62	Aluminum piping, piping components, and piping elements exposed to raw water	Loss of material due to pitting and crevice corrosion	Fire Protection (B2.1.12)	No	Not applicable. DCPP has no in-scope aluminum piping, piping components, and piping elements exposed to raw water in the fire protection system, so the applicable NUREG-1801 line was not used.
3.3.1.63	Steel fire rated doors exposed to air – outdoor or air - indoor uncontrolled	Loss of material due to Wear	Fire Protection (B2.1.12)	No	Consistent with NUREG-1801 with aging management program exceptions. The aging management program(s) with exceptions to NUREG-1801 include: Fire Protection (B2.1.12)
3.3.1.64	Steel piping, piping components, and piping elements exposed to fuel oil	Loss of material due to general, pitting, and crevice corrosion	Fire Protection (B2.1.12) and Fuel Oil Chemistry (B2.1.14)	No	Consistent with NUREG-1801 with aging management program exceptions. The aging management program(s) with exceptions to NUREG-1801 include: Fire Protection (B2.1.12), Fuel Oil Chemistry (B2.1.14).

Table 3.3.1 Summary of Aging Management Evaluations in Chapter VII of NUREG-1801 for Auxiliary Systems (Continued)

Item Number	Component Type	Aging Effect / Mechanism	Aging Management Program	Further Evaluation Recommended	Discussion
3.3.1.65	Reinforced concrete structural fire barriers – walls, ceilings and floors exposed to air – indoor uncontrolled	Concrete cracking and spalling due to aggressive chemical attack, and reaction with aggregates	Fire Protection (B2.1.12) and Structures Monitoring Program (B2.1.32)	No	Consistent with NUREG-1801 with aging management program exceptions. The aging management program(s) with exceptions to NUREG-1801 include: Fire Protection (B2.1.12)
3.3.1.66	Reinforced concrete structural fire barriers – walls, ceilings and floors exposed to air – outdoor	Concrete cracking and spalling due to freeze thaw, aggressive chemical attack, and reaction with aggregates	Fire Protection (B2.1.12) and Structures Monitoring Program (B2.1.32)	No	Consistent with NUREG-1801 with aging management program exceptions. The aging management program(s) with exceptions to NUREG-1801 include: Fire Protection (B2.1.12)
3.3.1.67	Reinforced concrete structural fire barriers – walls, ceilings and floors exposed to air – outdoor or air - indoor uncontrolled	Loss of material due to corrosion of embedded steel	Fire Protection (B2.1.12) and Structures Monitoring Program (B2.1.32)	No	Consistent with NUREG-1801 with aging management program exceptions. The aging management program(s) with exceptions to NUREG-1801 include: Fire Protection (B2.1.12)

Table 3.3.1 Summary of Aging Management Evaluations in Chapter VII of NUREG-1801 for Auxiliary Systems (Continued)

Item Number	Component Type	Aging Effect / Mechanism	Aging Management Program	Further Evaluation Recommended	Discussion
3.3.1.68	Steel piping, piping components, and piping elements exposed to raw water	Loss of material due to general, pitting, crevice, and microbiologically influenced corrosion, and fouling	Fire Water System (B2.1.13)	No	Consistent with NUREG-1801 with aging management program exceptions. The aging management program(s) with exceptions to NUREG-1801 include: Fire Water System (B2.1.13)
3.3.1.69	Stainless steel piping, piping components, and piping elements exposed to raw water	Loss of material due to pitting and crevice corrosion, and fouling	Fire Water System (B2.1.13)	No	Consistent with NUREG-1801 with aging management program exceptions. The aging management program(s) with exceptions to NUREG-1801 include: Fire Water System (B2.1.13)
3.3.1.70	Copper alloy piping, piping components, and piping elements exposed to raw water	Loss of material due to pitting, crevice, and microbiologically influenced corrosion, and fouling	Fire Water System (B2.1.13)	No	Consistent with NUREG-1801 with aging management program exceptions. The aging management program(s) with exceptions to NUREG-1801 include: Fire Water System (B2.1.13)

Table 3.3.1 Summary of Aging Management Evaluations in Chapter VII of NUREG-1801 for Auxiliary Systems (Continued)

Item Number	Component Type	Aging Effect / Mechanism	Aging Management Program	Further Evaluation Recommended	Discussion
3.3.1.71	Steel piping, piping components, and piping elements exposed to moist air or condensation (Internal)	Loss of material due to general, pitting, and crevice corrosion	Inspection of Internal Surfaces in Miscellaneous Piping and Ducting Components (B2.1.22)	No	Consistent with NUREG-1801 with aging management program exceptions. The aging management program(s) with exceptions to NUREG-1801 include: Inspection of Internal Surfaces in Miscellaneous Piping and Ducting Components (B2.1.22)
3.3.1.72	Steel HVAC ducting and components internal surfaces exposed to condensation (Internal)	Loss of material due to general, pitting, crevice, and (for drip pans and drain lines) microbiologically influenced corrosion	Inspection of Internal Surfaces in Miscellaneous Piping and Ducting Components (B2.1.22)	No	Consistent with NUREG-1801 with aging management program exceptions. The aging management program(s) with exceptions to NUREG-1801 include: Inspection of Internal Surfaces in Miscellaneous Piping and Ducting Components (B2.1.22)
3.3.1.73	Steel crane structural girders in load handling system exposed to air-indoor uncontrolled (external)	Loss of material due to general corrosion	Inspection of Overhead Heavy Load and Light Load (Related to Refueling) Handling Systems (B2.1.11)	No	Consistent with NUREG-1801.

Table 3.3.1 Summary of Aging Management Evaluations in Chapter VII of NUREG-1801 for Auxiliary Systems (Continued)

Item Number	Component Type	Aging Effect / Mechanism	Aging Management Program	Further Evaluation Recommended	Discussion
3.3.1.74	Steel cranes - rails exposed to air – indoor uncontrolled (external)	Loss of material due to Wear	Inspection of Overhead Heavy Load and Light Load (Related to Refueling) Handling Systems (B2.1.11)	No	Consistent with NUREG-1801.
3.3.1.75	Elastomer seals and components exposed to raw water	Hardening and loss of strength due to elastomer degradation; loss of material due to erosion	Open-Cycle Cooling Water System (B2.1.9)	No	Consistent with NUREG-1801.

Table 3.3.1 Summary of Aging Management Evaluations in Chapter VII of NUREG-1801 for Auxiliary Systems (Continued)

Item Number	Component Type	Aging Effect / Mechanism	Aging Management Program	Further Evaluation Recommended	Discussion
3.3.1.76	Steel piping, piping components, and piping elements (without lining/coating or with degraded lining/coating) exposed to raw water	Loss of material due to general, pitting, crevice, and microbiologically influenced corrosion, fouling, and lining/coating degradation	Open-Cycle Cooling Water System (B2.1.9)	No	Consistent with NUREG-1801 for all components except that a different aging management program is credited for abandoned-in-place components in the auxiliary steam system and for components exposed to the raw water environment in the gaseous, liquid and solid radioactive waste systems. The aging of internal component surfaces exposed to the raw water environment of the abandoned-in-place portions of the auxiliary steam system and the raw water environment of the gaseous, liquid and solid radioactive waste systems are managed by Inspection of Internal Surfaces in Miscellaneous Piping and Ducting Components (B2.1.22).

Table 3.3.1 Summary of Aging Management Evaluations in Chapter VII of NUREG-1801 for Auxiliary Systems (Continued)

Item Number	Component Type	Aging Effect / Mechanism	Aging Management Program	Further Evaluation Recommended	Discussion
3.3.1.77	Steel heat exchanger components exposed to raw water	Loss of material due to general, pitting, crevice, galvanic, and microbiologically influenced corrosion, and fouling	Open-Cycle Cooling Water System (B2.1.9)	No	Not applicable. DCPP has no in-scope steel heat exchanger components exposed to raw water in the emergency diesel generator system, so the applicable NUREG-1801 line was not used.
3.3.1.78	Stainless steel, nickel alloy, and copper alloy piping, piping components, and piping elements exposed to raw water	Loss of material due to pitting and crevice corrosion	Open-Cycle Cooling Water System (B2.1.9)	No	Consistent with NUREG-1801 for all components except that a different aging management program is credited for components exposed to the raw water environment in the liquid radioactive waste system. The aging of internal component surfaces exposed to the raw water environment of the liquid radioactive waste system are managed by Inspection of Internal Surfaces in Miscellaneous Piping and Ducting Components (B2.1.22).

Table 3.3.1 Summary of Aging Management Evaluations in Chapter VII of NUREG-1801 for Auxiliary Systems (Continued)

Item Number	Component Type	Aging Effect / Mechanism	Aging Management Program	Further Evaluation Recommended	Discussion
3.3.1.79	Stainless steel piping, piping components, and piping elements exposed to raw water	Loss of material due to pitting and crevice corrosion, and fouling	Open-Cycle Cooling Water System (B2.1.9)	No	Consistent with NUREG-1801 for all components except that a different aging management program is credited for components exposed to the raw water environment in the liquid radioactive waste system. The aging of internal component surfaces exposed to the raw water environment of the liquid radioactive waste system are managed by Inspection of Internal Surfaces in Miscellaneous Piping and Ducting Components (B2.1.22).
3.3.1.80	Stainless steel and copper alloy piping, piping components, and piping elements exposed to raw water	Loss of material due to pitting, crevice, and microbiologically influenced corrosion	Open-Cycle Cooling Water System (B2.1.9)	No	Not applicable. DCPP has no in-scope stainless steel and copper alloy piping, piping components, and piping elements exposed to raw water in the emergency diesel generator system, so the applicable NUREG-1801 lines were not used.

Table 3.3.1 Summary of Aging Management Evaluations in Chapter VII of NUREG-1801 for Auxiliary Systems (Continued)

Item Number	Component Type	Aging Effect / Mechanism	Aging Management Program	Further Evaluation Recommended	Discussion
3.3.1.81	Copper alloy piping, piping components, and piping elements, exposed to raw water	Loss of material due to pitting, crevice, and microbiologically influenced corrosion, and fouling	Open-Cycle Cooling Water System (B2.1.9)	No	Consistent with NUREG-1801 for all components except that a different aging management program is credited for piping and components exposed to the raw water environment in the gaseous and liquid radioactive waste systems and to the raw water (condensation) environment in the auxiliary building HVAC system. The aging of internal component surfaces exposed to the raw water environment of the gaseous and liquid radioactive waste systems and the auxiliary building HVAC system are managed by Inspection of Internal Surfaces in Miscellaneous Piping and Ducting Components (B2.1.22).
3.3.1.82	Copper alloy heat exchanger components exposed to raw water	Loss of material due to pitting, crevice, galvanic, and microbiologically influenced corrosion, and fouling	Open-Cycle Cooling Water System (B2.1.9)	No	Consistent with NUREG-1801.

Table 3.3.1 Summary of Aging Management Evaluations in Chapter VII of NUREG-1801 for Auxiliary Systems (Continued)

Item Number	Component Type	Aging Effect / Mechanism	Aging Management Program	Further Evaluation Recommended	Discussion
3.3.1.83	Stainless steel and copper alloy heat exchanger tubes exposed to raw water	Reduction of heat transfer due to fouling	Open-Cycle Cooling Water System (B2.1.9)	No	Consistent with NUREG-1801.
3.3.1.84	Copper alloy >15% Zn piping, piping components, piping elements, and heat exchanger components exposed to raw water, treated water, or closed cycle cooling water	Loss of material due to selective leaching	Selective Leaching of Materials (B2.1.17)	No	Consistent with NUREG-1801.
3.3.1.85	Gray cast iron piping, piping components, and piping elements exposed to soil, raw water, treated water, or closed-cycle cooling water	Loss of material due to selective leaching	Selective Leaching of Materials (B2.1.17)	No	Consistent with NUREG-1801.

Table 3.3.1 Summary of Aging Management Evaluations in Chapter VII of NUREG-1801 for Auxiliary Systems (Continued)

Item Number	Component Type	Aging Effect / Mechanism	Aging Management Program	Further Evaluation Recommended	Discussion
3.3.1.86	Structural steel (new fuel storage rack assembly) exposed to air – indoor uncontrolled (external)	Loss of material due to general, pitting, and crevice corrosion	Structures Monitoring Program (B2.1.32)	No	Not applicable. DCPP has no in-scope structural steel new fuel storage rack assemblies so the applicable NUREG-1801 line was not used. DCPP new fuel storage rack assemblies are stainless steel components and an appropriate stainless steel line from NUREG-1801 was used.
3.3.1.87	Boraflex spent fuel storage racks neutron-absorbing sheets exposed to treated borated water	Reduction of neutron-absorbing capacity due to boraflex degradation	Boraflex Monitoring	No	Not applicable. DCPP has no in-scope boraflex spent fuel storage racks or neutron-absorbing sheets exposed to treated borated water in the spent fuel pool cooling system as discussed in FSAR Section 9.1.2.3, so the applicable NUREG-1801 line was not used.

Table 3.3.1 Summary of Aging Management Evaluations in Chapter VII of NUREG-1801 for Auxiliary Systems (Continued)

Item Number	Component Type	Aging Effect / Mechanism	Aging Management Program	Further Evaluation Recommended	Discussion
3.3.1.88	Aluminum and copper alloy >15% Zn piping, piping components, and piping elements exposed to air with borated water leakage	Loss of material due to Boric acid corrosion	Boric Acid Corrosion (B2.1.4)	No	Not applicable. DCPP has no in-scope aluminum or copper alloy >15 percent Zn piping, piping components, and piping elements exposed to air with borated water leakage in the auxiliary systems, so the applicable NUREG-1801 lines were not used.
3.3.1.89	Steel bolting and external surfaces exposed to air with borated water leakage	Loss of material due to Boric acid corrosion	Boric Acid Corrosion (B2.1.4)	No	Consistent with NUREG-1801.
3.3.1.90	Stainless steel and steel with stainless steel cladding piping, piping components, piping elements, tanks, and fuel storage racks exposed to treated borated water >60°C (>140°F)	Cracking due to stress corrosion cracking	Water Chemistry (B2.1.2)	No	Consistent with NUREG-1801 for material, environment, and aging effect, but a different aging management program Water Chemistry (B2.1.2) and One-Time Inspection (B2.1.16) is credited.

Table 3.3.1 Summary of Aging Management Evaluations in Chapter VII of NUREG-1801 for Auxiliary Systems (Continued)

Item Number	Component Type	Aging Effect / Mechanism	Aging Management Program	Further Evaluation Recommended	Discussion
3.3.1.91	Stainless steel and steel with stainless steel cladding piping, piping components, and piping elements exposed to treated borated water	Loss of material due to pitting and crevice corrosion	Water Chemistry (B2.1.2)	No	Consistent with NUREG-1801 for material, environment, and aging effect, but a different aging management program Water Chemistry (B2.1.2) and One-Time Inspection (B2.1.16) is credited.
3.3.1.92	Galvanized steel piping, piping components, and piping elements exposed to air – indoor uncontrolled	None	None	NA	Consistent with NUREG-1801.
3.3.1.93	Glass piping elements exposed to air, air – indoor uncontrolled (external), fuel oil, lubricating oil, raw water, treated water, and treated borated water	None	None	NA	Consistent with NUREG-1801.

Table 3.3.1 Summary of Aging Management Evaluations in Chapter VII of NUREG-1801 for Auxiliary Systems (Continued)

Item Number	Component Type	Aging Effect / Mechanism	Aging Management Program	Further Evaluation Recommended	Discussion
3.3.1.94	Stainless steel and nickel alloy piping, piping components, and piping elements exposed to air – indoor uncontrolled (external)	None	None	NA	Consistent with NUREG-1801.
3.3.1.95	Steel and aluminum piping, piping components, and piping elements exposed to air – indoor controlled (external)	None	None	NA	Consistent with NUREG-1801.
3.3.1.96	Steel and stainless steel piping, piping components, and piping elements in concrete	None	None	NA	Consistent with NUREG-1801.
3.3.1.97	Steel, stainless steel, aluminum, and copper alloy piping, piping components, and piping elements exposed to gas	None	None	NA	Consistent with NUREG-1801.

Table 3.3.1 Summary of Aging Management Evaluations in Chapter VII of NUREG-1801 for Auxiliary Systems (Continued)

Item Number	Component Type	Aging Effect / Mechanism	Aging Management Program	Further Evaluation Recommended	Discussion
3.3.1.98	Steel, stainless steel, and copper alloy piping, piping components, and piping elements exposed to dried air	None	None	NA	Consistent with NUREG-1801.
3.3.1.99	Stainless steel and copper alloy <15% Zn piping, piping components, and piping elements exposed to air with borated water leakage	None	None	NA	Consistent with NUREG-1801.

Table 3.3.2-1 Auxiliary Systems – Summary of Aging Management Evaluation – Cranes and Fuel Handling System

Component Type	Intended Function	Material	Environment	Aging Effect Requiring Management	Aging Management Program	NUREG-1801 Vol. 2 Item	Table 1 Item	Notes
Crane	SS	Carbon Steel	Atmosphere/ Weather (Ext)	Cumulative fatigue damage	Time-Limited Aging Analysis evaluated for the period of extended operation	VII.B-2	3.3.1.01	A
Crane	SS	Carbon Steel	Atmosphere/ Weather (Ext)	Loss of material	Inspection of Overhead Heavy Load and Light Load (Related to Refueling) Handling Systems (B2.1.11)	VII.I-9	3.3.1.58	E, 1
Crane	SS	Carbon Steel	Plant Indoor Air (Ext)	Cumulative fatigue damage	Time-Limited Aging Analysis evaluated for the period of extended operation	VII.B-2	3.3.1.01	A
Crane	SS	Carbon Steel	Plant Indoor Air (Ext)	Loss of material	Inspection of Overhead Heavy Load and Light Load (Related to Refueling) Handling Systems (B2.1.11)	VII.B-3	3.3.1.73	A
Cranes - Rails	SS	Carbon Steel	Atmosphere/ Weather (Ext)	Loss of material	Inspection of Overhead Heavy Load and Light Load (Related to Refueling) Handling Systems (B2.1.11)	None	None	G, 3
Cranes - Rails	SS	Carbon Steel	Atmosphere/ Weather (Ext)	Loss of material	Inspection of Overhead Heavy Load and Light Load (Related to Refueling) Handling Systems (B2.1.11)	VII.I-9	3.3.1.58	E, 1
Cranes - Rails	SS	Carbon Steel	Plant Indoor Air (Ext)	Loss of material	Inspection of Overhead Heavy Load and Light Load (Related to Refueling) Handling Systems (B2.1.11)	VII.B-1	3.3.1.74	A, 3
Elevator	SS	Stainless Steel	Treated Borated Water (Ext)	Loss of material	Water Chemistry (B2.1.2) and One-Time Inspection (B2.1.16)	VII.A2-1	3.3.1.91	E, 2

Table 3.3.2-1 Auxiliary Systems – Summary of Aging Management Evaluation – Cranes and Fuel Handling System (Continued)

Component Type	Intended Function	Material	Environment	Aging Effect Requiring Management	Aging Management Program	NUREG-1801 Vol. 2 Item	Table 1 Item	Notes
Fuel Handling Equip	SS	Stainless Steel	Plant Indoor Air (Ext)	None	None	VII.J-15	3.3.1.94	C
Trolley	SS	Carbon Steel	Atmosphere/ Weather (Ext)	Loss of material	Inspection of Overhead Heavy Load and Light Load (Related to Refueling) Handling Systems (B2.1.11)	VII.I-9	3.3.1.58	E, 1
Trolley	SS	Carbon Steel	Plant Indoor Air (Ext)	Loss of material	Inspection of Overhead Heavy Load and Light Load (Related to Refueling) Handling Systems (B2.1.11)	VII.B-3	3.3.1.73	C

Notes for Table 3.3.2-1:

Standard Notes:

A Consistent with NUREG-1801 item for component, material, environment, and aging effect. AMP is consistent with NUREG-1801 AMP.

C Component is different, but consistent with NUREG-1801 item for material, environment, and aging effect. AMP is consistent with NUREG-1801 AMP.

E Consistent with NUREG-1801 for material, environment, and aging effect, but a different aging management program is credited or NUREG-1801 identifies a plant-specific aging management program.

G Environment not in NUREG-1801 for this component and material.

Plant Specific Notes:

1 A different aging management program is credited for the Intake Structure Gantry Crane in the cranes and fuel handling system. Loss of material due to general corrosion in carbon steel crane rails in an atmosphere/weather environment for the Intake Structure Gantry Crane is managed by Inspection of Overhead Heavy Load and Light Load (Related to Refueling) Handling Systems (B2.1.11).

2 The Water Chemistry program (B2.1.2) and the One-Time Inspection program (B2.1.16) manages loss of material due to pitting and crevice corrosion and cracking due to stress corrosion cracking. The One-Time Inspection program (B2.1.16) includes selected components at susceptible locations.

3 Carbon steel crane rails in an atmosphere/weather environment will experience loss of material due to wear. This is consistent with wear in other carbon steel components in a plant indoor air environment such as NUREG-1801, Line VII.B-1. Loss of material due to wear occurs when surface layers are removed due to relative motion between two surfaces and is not dependent upon indoor or outdoor atmosphere. Loss of material due to wear in crane rails is managed by Inspection of Overhead Heavy Load and Light Load (Related to Refueling) Handling Systems (B2.1.11).

Table 3.3.2-2 Auxiliary Systems – Summary of Aging Management Evaluation – Spent Fuel Pool Cooling System

Component Type	Intended Function	Material	Environment	Aging Effect Requiring Management	Aging Management Program	NUREG-1801 Vol. 2 Item	Table 1 Item	Notes
Closure Bolting	LBS, PB, SIA	Carbon Steel	Plant Indoor Air (Ext)	Loss of material	Bolting Integrity (B2.1.7)	VII.I-4	3.3.1.43	B
Closure Bolting	LBS, PB, SIA	Carbon Steel	Plant Indoor Air (Ext)	Loss of preload	Bolting Integrity (B2.1.7)	VII.I-5	3.3.1.45	B
Closure Bolting	LBS, PB, SIA	Stainless Steel	Borated Water Leakage (Ext)	Loss of preload	Bolting Integrity (B2.1.7)	IV.C2-8	3.1.1.52	B
Closure Bolting	LBS, PB, SIA	Stainless Steel	Borated Water Leakage (Ext)	None	None	VII.J-16	3.3.1.99	C
Demineralizer	PB	Stainless Steel	Borated Water Leakage (Ext)	None	None	VII.J-16	3.3.1.99	A
Demineralizer	PB	Stainless Steel	Treated Borated Water (Int)	Loss of material	Water Chemistry (B2.1.2) and One-Time Inspection (B2.1.16)	VII.A3-8	3.3.1.91	E, 1
Filter	LBS, PB	Stainless Steel	Borated Water Leakage (Ext)	None	None	VII.J-16	3.3.1.99	A
Filter	LBS, PB	Stainless Steel	Treated Borated Water (Int)	Loss of material	Water Chemistry (B2.1.2) and One-Time Inspection (B2.1.16)	VII.A3-8	3.3.1.91	E, 1
Flexible Hoses	LBS	Elastomer	Plant Indoor Air (Ext)	Hardening and loss of strength	External Surfaces Monitoring Program (B2.1.20)	VII.F2-7	3.3.1.11	E

Table 3.3.2-2 Auxiliary Systems – Summary of Aging Management Evaluation – Spent Fuel Pool Cooling System (Continued)

Component Type	Intended Function	Material	Environment	Aging Effect Requiring Management	Aging Management Program	NUREG-1801 Vol. 2 Item	Table 1 Item	Notes
Flexible Hoses	LBS	Elastomer	Treated Borated Water (Int)	Hardening and loss of strength	Inspection of Internal Surfaces in Miscellaneous Piping and Ducting Components (B2.1.22)	VII.A3-1	3.3.1.12	E
Flow Element	LBS, PB, SIA	Stainless Steel	Borated Water Leakage (Ext)	None	None	VII.J-16	3.3.1.99	A
Flow Element	LBS, PB, SIA	Stainless Steel	Treated Borated Water (Int)	Loss of material	Water Chemistry (B2.1.2) and One-Time Inspection (B2.1.16)	VII.A3-8	3.3.1.91	E, 1
Heat Exchanger (Spent Fuel Pit)	PB	Carbon Steel	Closed Cycle Cooling Water (Int)	Loss of material	Closed-Cycle Cooling Water System (B2.1.10)	VII.C2-1	3.3.1.48	B
Heat Exchanger (Spent Fuel Pit)	PB	Carbon Steel	Plant Indoor Air (Ext)	Loss of material	External Surfaces Monitoring Program (B2.1.20)	VII.I-8	3.3.1.58	B
Heat Exchanger (Spent Fuel Pit)	PB	Stainless Steel	Borated Water Leakage (Ext)	None	None	VII.J-16	3.3.1.99	A
Heat Exchanger (Spent Fuel Pit)	HT, PB	Stainless Steel	Closed Cycle Cooling Water (Ext)	Loss of material	Closed-Cycle Cooling Water System (B2.1.10)	V.A-7	3.2.1.28	B

Table 3.3.2-2 Auxiliary Systems – Summary of Aging Management Evaluation – Spent Fuel Pool Cooling System (Continued)

Component Type	Intended Function	Material	Environment	Aging Effect Requiring Management	Aging Management Program	NUREG-1801 Vol. 2 Item	Table 1 Item	Notes
Heat Exchanger (Spent Fuel Pit)	HT, PB	Stainless Steel	Closed Cycle Cooling Water (Ext)	Reduction of heat transfer	Closed-Cycle Cooling Water System (B2.1.10)	VII.C2-3	3.3.1.52	B
Heat Exchanger (Spent Fuel Pit)	HT, PB	Stainless Steel	Treated Borated Water (Int)	Reduction of heat transfer	Water Chemistry (B2.1.2) and One-Time Inspection (B2.1.16)	None	None	H, 2
Heat Exchanger (Spent Fuel Pit)	HT, PB	Stainless Steel	Treated Borated Water (Int)	Loss of material	Water Chemistry (B2.1.2) and One-Time Inspection (B2.1.16)	VII.A3-8	3.3.1.91	E, 1
Piping	LBS, PB, SIA	Stainless Steel	Borated Water Leakage (Ext)	None	None	VII.J-16	3.3.1.99	A
Piping	PB	Stainless Steel	Demineralized Water (Int)	Loss of material	Water Chemistry (B2.1.2) and One-Time Inspection (B2.1.16)	VIII.E-29	3.4.1.16	A
Piping	PB	Stainless Steel	Encased in Concrete (Ext)	None	None	VII.J-17	3.3.1.96	A
Piping	PB	Stainless Steel	Plant Indoor Air (Ext)	None	None	VII.J-15	3.3.1.94	A
Piping	LBS, PB	Stainless Steel	Plant Indoor Air (Int)	Loss of material	Inspection of Internal Surfaces in Miscellaneous Piping and Ducting Components (B2.1.22)	V.A-26	3.2.1.08	E

Table 3.3.2-2 Auxiliary Systems – Summary of Aging Management Evaluation – Spent Fuel Pool Cooling System (Continued)

Component Type	Intended Function	Material	Environment	Aging Effect Requiring Management	Aging Management Program	NUREG-1801 Vol. 2 Item	Table 1 Item	Notes
Piping	LBS, PB, SIA	Stainless Steel	Treated Borated Water (Int)	Loss of material	Water Chemistry (B2.1.2) and One-Time Inspection (B2.1.16)	VII.A3-8	3.3.1.91	E, 1
Platform	SS	Stainless Steel	Treated Borated Water (Ext)	Loss of material	Water Chemistry (B2.1.2 and One-Time Inspection (B2.1.16)	VII.A3-8	3.3.1.91	E, 1
Pump	LBS, PB	Carbon Steel with Stainless Steel Cladding	Borated Water Leakage (Ext)	Loss of material	Boric Acid Corrosion (B2.1.4)	VII.A3-2	3.3.1.89	A
Pump	LBS, PB	Carbon Steel with Stainless Steel Cladding	Treated Borated Water (Int)	Loss of material	Water Chemistry (B2.1.2) and One-Time Inspection (B2.1.16)	VII.A3-8	3.3.1.91	E,1
Pump	PB	Stainless Steel Cast Austenitic	Borated Water Leakage (Ext)	None	None	VII.J-16	3.3.1.99	A
Pump	PB	Stainless Steel Cast Austenitic	Treated Borated Water (Int)	Loss of material	Water Chemistry (B2.1.2) and One-Time Inspection (B2.1.16)	VII.A3-8	3.3.1.91	E,1
Rack	SS	Stainless Steel	Plant Indoor Air (Ext)	None	None	VII.J-15	3.3.1.94	C
Rack	SS	Stainless Steel	Treated Borated Water (Ext)	Loss of material	Water Chemistry (B2.1.2) and One-Time Inspection (B2.1.16)	VII.A3-8	3.3.1.91	E, 1

Table 3.3.2-2 Auxiliary Systems – Summary of Aging Management Evaluation – Spent Fuel Pool Cooling System (Continued)

Component Type	Intended Function	Material	Environment	Aging Effect Requiring Management	Aging Management Program	NUREG-1801 Vol. 2 Item	Table 1 Item	Notes
Sight Gauge	LBS, SIA	Glass	Plant Indoor Air (Ext)	None	None	VII.J-8	3.3.1.93	A
Sight Gauge	LBS, SIA	Glass	Treated Borated Water (Int)	None	None	VII.J-12	3.3.1.93	A
Sight Gauge	LBS	Stainless Steel	Borated Water Leakage (Ext)	None	None	VII.J-16	3.3.1.99	A
Sight Gauge	LBS	Stainless Steel	Treated Borated Water (Int)	Loss of material	Water Chemistry (B2.1.2) and One-Time Inspection (B2.1.16)	VII.A3-8	3.3.1.91	E, 1
Strainer	LBS	Stainless Steel	Borated Water Leakage (Ext)	None	None	VII.J-16	3.3.1.99	A
Strainer	FIL	Stainless Steel	Treated Borated Water (Ext)	Loss of material	Water Chemistry (B2.1.2) and One-Time Inspection (B2.1.16)	VII.A3-8	3.3.1.91	E, 1
Strainer	FIL, LBS	Stainless Steel	Treated Borated Water (Int)	Loss of material	Water Chemistry (B2.1.2) and One-Time Inspection (B2.1.16)	VII.A3-8	3.3.1.91	E, 1
Test Connection	LBS, PB, SIA	Stainless Steel	Borated Water Leakage (Ext)	None	None	VII.J-16	3.3.1.99	A
Test Connection	LBS, PB, SIA	Stainless Steel	Plant Indoor Air (Int)	Loss of material	Inspection of Internal Surfaces in Miscellaneous Piping and Ducting Components (B2.1.22)	V.A-26	3.2.1.08	E
Trap	PB	Stainless Steel	Borated Water Leakage (Ext)	None	None	VII.J-16	3.3.1.99	A

Table 3.3.2-2 Auxiliary Systems – Summary of Aging Management Evaluation – Spent Fuel Pool Cooling System (Continued)

Component Type	Intended Function	Material	Environment	Aging Effect Requiring Management	Aging Management Program	NUREG-1801 Vol. 2 Item	Table 1 Item	Notes
Trap	PB	Stainless Steel	Treated Borated Water (Int)	Loss of material	Water Chemistry (B2.1.2) and One-Time Inspection (B2.1.16)	VII.A3-8	3.3.1.91	E, 1
Tubing	LBS, PB, SIA	Stainless Steel	Borated Water Leakage (Ext)	None	None	VII.J-16	3.3.1.99	A
Tubing	LBS, PB, SIA	Stainless Steel	Treated Borated Water (Int)	Loss of material	Water Chemistry (B2.1.2) and One-Time Inspection (B2.1.16)	VII.A3-8	3.3.1.91	E, 1
Valve	LBS, PB, SIA	Stainless Steel	Borated Water Leakage (Ext)	None	None	VII.J-16	3.3.1.99	A
Valve	PB	Stainless Steel	Demineralized Water (Int)	Loss of material	Water Chemistry (B2.1.2) and One-Time Inspection (B2.1.16)	VIII.E-29	3.4.1.16	A
Valve	SIA	Stainless Steel	Plant Indoor Air (Int)	Loss of material	Inspection of Internal Surfaces in Miscellaneous Piping and Ducting Components (B2.1.22)	V.A-26	3.2.1.08	E
Valve	SIA	Stainless Steel	Treated Borated Water (Ext)	Loss of material	Water Chemistry (B2.1.2) and One-Time Inspection (B2.1.16)	VII.A3-8	3.3.1.91	E, 1
Valve	LBS, PB, SIA	Stainless Steel	Treated Borated Water (Int)	Loss of material	Water Chemistry (B2.1.2) and One-Time Inspection (B2.1.16)	VII.A3-8	3.3.1.91	E, 1
Valve	LBS, PB, SIA	Stainless Steel Cast Austenitic	Borated Water Leakage (Ext)	None	None	VII.J-16	3.3.1.99	A

Table 3.3.2-2 Auxiliary Systems – Summary of Aging Management Evaluation – Spent Fuel Pool Cooling System (Continued)

Component Type	Intended Function	Material	Environment	Aging Effect Requiring Management	Aging Management Program	NUREG-1801 Vol. 2 Item	Table 1 Item	Notes
Valve	PB	Stainless Steel Cast Austenitic	Demineralized Water (Int)	Loss of material	Water Chemistry (B2.1.2) and One-Time Inspection (B2.1.16)	VIII.E-29	3.4.1.16	A
Valve	LBS	Stainless Steel Cast Austenitic	Plant Indoor Air (Int)	Loss of material	Inspection of Internal Surfaces in Miscellaneous Piping and Ducting Components (B2.1.22)	V.A-26	3.2.1.08	E
Valve	LBS, PB, SIA	Stainless Steel Cast Austenitic	Treated Borated Water (Int)	Loss of material	Water Chemistry (B2.1.2) and One-Time Inspection (B2.1.16)	VII.A3-8	3.3.1.91	E, 1

Notes for Table 3.3.2-2:

Standard Notes:

A Consistent with NUREG-1801 item for component, material, environment, and aging effect. AMP is consistent with NUREG-1801 AMP.

B Consistent with NUREG-1801 item for component, material, environment, and aging effect. AMP takes some exceptions to NUREG-1801 AMP.

C Component is different, but consistent with NUREG-1801 item for material, environment, and aging effect. AMP is consistent with NUREG-1801 AMP.

E Consistent with NUREG-1801 for material, environment, and aging effect, but a different aging management program is credited or NUREG-1801 identifies a plant-specific aging management program.

H Aging effect not in NUREG-1801 for this component, material and environment combination.

Plant Specific Notes:

1 The Water Chemistry program (B2.1.2) and the One-Time Inspection program (B2.1.16) manages loss of material due to pitting and crevice corrosion and cracking due to stress corrosion cracking. The One-Time Inspection program (B2.1.16) includes selected components at susceptible locations.

2 The reduction of heat transfer aging effect is not identified in NUREG-1801 for this component, material, and environment combination. Reduction of heat transfer is not expected in heat exchangers with reactor coolant or treated borated water environments as long as water chemistry is maintained. Reduction of heat transfer is managed with Water Chemistry (B2.1.2) and One Time Inspection (B2.1.16).

Table 3.3.2-3 Auxiliary Systems – Summary of Aging Management Evaluation – Saltwater and Chlorination System

Component Type	Intended Function	Material	Environment	Aging Effect Requiring Management	Aging Management Program	NUREG-1801 Vol. 2 Item	Table 1 Item	Notes
Bellows	PB	Elastomer	Plant Indoor Air (Ext)	Hardening and loss of strength	External Surfaces Monitoring Program (B2.1.20)	VII.F1-7	3.3.1.11	E
Bellows	PB	Elastomer	Raw Water (Int)	Loss of material	Open-Cycle Cooling Water System (B2.1.9)	VII.C1-2	3.3.1.75	A
Bellows	PB	Nickel-Alloys	Plant Indoor Air (Ext)	None	None	VII.J-14	3.3.1.94	A
Bellows	PB	Nickel-Alloys	Raw Water (Int)	Loss of material	Open-Cycle Cooling Water System (B2.1.9)	VII.C1-13	3.3.1.78	A
Bellows	PB	Stainless Steel	Plant Indoor Air (Ext)	None	None	VII.J-15	3.3.1.94	A
Bellows	PB	Stainless Steel	Raw Water (Int)	Loss of material	Open-Cycle Cooling Water System (B2.1.9)	VII.C1-15	3.3.1.79	A
Closure Bolting	LBS, PB	Carbon Steel	Plant Indoor Air (Ext)	Loss of material	Bolting Integrity (B2.1.7)	VII.I-4	3.3.1.43	B
Closure Bolting	LBS, PB	Carbon Steel	Plant Indoor Air (Ext)	Loss of preload	Bolting Integrity (B2.1.7)	VII.I-5	3.3.1.45	B
Closure Bolting	LBS, PB	Stainless Steel	Plant Indoor Air (Ext)	Loss of preload	Bolting Integrity (B2.1.7)	None	None	H, 1
Closure Bolting	LBS, PB	Stainless Steel	Plant Indoor Air (Ext)	None	None	VII.J-15	3.3.1.94	C
Closure Bolting	LBS, PB	Stainless Steel	Raw Water (Ext)	Loss of preload	Bolting Integrity (B2.1.7)	None	None	H, 1
Closure Bolting	LBS, PB	Stainless Steel	Raw Water (Ext)	Loss of material	Open-Cycle Cooling Water System (B2.1.9)	VII.C1-15	3.3.1.79	C

Table 3.3.2-3 Auxiliary Systems – Summary of Aging Management Evaluation – Saltwater and Chlorination System (Continued)

Component Type	Intended Function	Material	Environment	Aging Effect Requiring Management	Aging Management Program	NUREG-1801 Vol. 2 Item	Table 1 Item	Notes
Expansion Joint	LBS, SIA	Elastomer	Plant Indoor Air (Ext)	Hardening and loss of strength	External Surfaces Monitoring Program (B2.1.20)	VII.F1-7	3.3.1.11	E
Expansion Joint	LBS, SIA	Elastomer	Plant Indoor Air (Int)	Hardening and loss of strength	Inspection of Internal Surfaces in Miscellaneous Piping and Ducting Components (B2.1.22)	VII.F1-7	3.3.1.11	E
Flexible Hoses	LBS, PB	Stainless Steel	Plant Indoor Air (Ext)	None	None	VII.J-15	3.3.1.94	A
Flexible Hoses	LBS, PB	Stainless Steel	Raw Water (Int)	Loss of material	Open-Cycle Cooling Water System (B2.1.9)	VII.C1-15	3.3.1.79	A
Flow Element	PB	Stainless Steel	Plant Indoor Air (Ext)	None	None	VII.J-15	3.3.1.94	A
Flow Element	PB	Stainless Steel	Raw Water (Int)	Loss of material	Open-Cycle Cooling Water System (B2.1.9)	VII.C1-15	3.3.1.79	A
Piping	PB	Carbon Steel	Buried (Ext)	Loss of material	Buried Piping and Tanks Inspection (B2.1.18)	VII.C1-18	3.3.1.19	B
Piping	PB	Carbon Steel	Encased in Concrete (Ext)	None	None	VII.J-21	3.3.1.96	A
Piping	LBS, PB	Carbon Steel	Plant Indoor Air (Ext)	Loss of material	External Surfaces Monitoring Program (B2.1.20)	VII.I-8	3.3.1.58	B
Piping	LBS, PB	Carbon Steel	Raw Water (Int)	Loss of material	Open-Cycle Cooling Water System (B2.1.9)	VII.C1-19	3.3.1.76	A

Table 3.3.2-3 Auxiliary Systems – Summary of Aging Management Evaluation – Saltwater and Chlorination System (Continued)

Component Type	Intended Function	Material	Environment	Aging Effect Requiring Management	Aging Management Program	NUREG-1801 Vol. 2 Item	Table 1 Item	Notes
Piping	PB	Copper Alloy	Plant Indoor Air (Ext)	None	None	VIII.I-2	3.4.1.41	A
Piping	PB	Copper Alloy	Raw Water (Int)	Loss of material	Open-Cycle Cooling Water System (B2.1.9)	VII.C1-9	3.3.1.81	A
Piping	LBS, SIA	Polyvinyl Chloride (PVC)	Plant Indoor Air (Ext)	None	None	None	None	F
Piping	LBS, SIA	Polyvinyl Chloride (PVC)	Plant Indoor Air (Int)	None	None	None	None	F
Piping	PB	Stainless Steel	Encased in Concrete (Ext)	None	None	VII.J-17	3.3.1.96	A
Piping	LBS, PB, SIA	Stainless Steel	Plant Indoor Air (Ext)	None	None	VII.J-15	3.3.1.94	A
Piping	PB	Stainless Steel	Plant Indoor Air (Int)	Loss of material	Inspection of Internal Surfaces in Miscellaneous Piping and Ducting Components (B2.1.22)	VII.F1-1	3.3.1.27	E
Piping	LBS, PB, SIA	Stainless Steel	Raw Water (Int)	Loss of material	Open-Cycle Cooling Water System (B2.1.9)	VII.C1-15	3.3.1.79	A
Pump	PB	Stainless Steel	Plant Indoor Air (Ext)	None	None	VII.J-15	3.3.1.94	A
Pump	PB	Stainless Steel	Raw Water (Ext)	Loss of material	Open-Cycle Cooling Water System (B2.1.9)	VII.C1-15	3.3.1.79	A
Pump	PB	Stainless Steel	Raw Water (Int)	Loss of material	Open-Cycle Cooling Water System (B2.1.9)	VII.C1-15	3.3.1.79	A

Table 3.3.2-3 Auxiliary Systems – Summary of Aging Management Evaluation – Saltwater and Chlorination System (Continued)

Component Type	Intended Function	Material	Environment	Aging Effect Requiring Management	Aging Management Program	NUREG-1801 Vol. 2 Item	Table 1 Item	Notes
Screen	FIL, LBS, SIA	Stainless Steel	Plant Indoor Air (Ext)	None	None	VII.J-15	3.3.1.94	A
Test Connection	PB	Carbon Steel	Plant Indoor Air (Ext)	Loss of material	External Surfaces Monitoring Program (B2.1.20)	VII.I-8	3.3.1.58	B
Test Connection	PB	Carbon Steel	Raw Water (Int)	Loss of material	Open-Cycle Cooling Water System (B2.1.9)	VII.C1-19	3.3.1.76	A
Thermowell	PB	Nickel-Alloys	Plant Indoor Air (Ext)	None	None	VII.J-14	3.3.1.94	A
Thermowell	PB	Nickel-Alloys	Raw Water (Int)	Loss of material	Open-Cycle Cooling Water System (B2.1.9)	VII.C1-13	3.3.1.78	A
Tubing	LBS, PB	Stainless Steel	Plant Indoor Air (Ext)	None	None	VII.J-15	3.3.1.94	A
Tubing	LBS, PB	Stainless Steel	Raw Water (Int)	Loss of material	Open-Cycle Cooling Water System (B2.1.9)	VII.C1-15	3.3.1.79	A
Tubing	PB	Titanium (Grade 9)	Plant Indoor Air (Ext)	None	None	None	None	F
Tubing	PB	Titanium (Grade 9)	Raw Water (Int)	Cracking	Open-Cycle Cooling Water System (B2.1.9)	None	None	F
Valve	PB	Carbon Steel	Plant Indoor Air (Ext)	Loss of material	External Surfaces Monitoring Program (B2.1.20)	VII.I-8	3.3.1.58	B
Valve	PB	Carbon Steel	Raw Water (Int)	Loss of material	Open-Cycle Cooling Water System (B2.1.9)	VII.C1-19	3.3.1.76	A
Valve	PB	Cast Iron	Atmosphere/ Weather (Ext)	Loss of material	External Surfaces Monitoring Program (B2.1.20)	VII.I-9	3.3.1.58	B

Table 3.3.2-3 Auxiliary Systems – Summary of Aging Management Evaluation – Saltwater and Chlorination System (Continued)

Component Type	Intended Function	Material	Environment	Aging Effect Requiring Management	Aging Management Program	NUREG-1801 Vol. 2 Item	Table 1 Item	Notes
Valve	PB	Cast Iron	Raw Water (Int)	Loss of material	Open-Cycle Cooling Water System (B2.1.9)	VII.C1-19	3.3.1.76	A
Valve	PB	Copper Alloy	Plant Indoor Air (Ext)	None	None	VIII.I-2	3.4.1.41	A
Valve	PB	Copper Alloy	Raw Water (Int)	Loss of material	Open-Cycle Cooling Water System (B2.1.9)	VII.C1-9	3.3.1.81	A
Valve	PB	Copper Alloy (Aluminum > 8%)	Plant Indoor Air (Ext)	None	None	VIII.I-2	3.4.1.41	A
Valve	PB	Copper Alloy (Aluminum > 8%)	Raw Water (Int)	Loss of material	Selective Leaching of Materials (B2.1.17)	VII.C1-10	3.3.1.84	A
Valve	PB	Nickel-Alloys	Plant Indoor Air (Ext)	None	None	VII.J-14	3.3.1.94	A
Valve	PB	Nickel-Alloys	Raw Water (Int)	Loss of material	Open-Cycle Cooling Water System (B2.1.9)	VII.C1-13	3.3.1.78	A
Valve	LBS, PB, SIA	Stainless Steel	Plant Indoor Air (Ext)	None	None	VII.J-15	3.3.1.94	A
Valve	LBS, PB, SIA	Stainless Steel	Raw Water (Int)	Loss of material	Open-Cycle Cooling Water System (B2.1.9)	VII.C1-15	3.3.1.79	A
Valve	LBS, PB, SIA	Stainless Steel Cast Austenitic	Plant Indoor Air (Ext)	None	None	VII.J-15	3.3.1.94	A
Valve	LBS, PB, SIA	Stainless Steel Cast Austenitic	Raw Water (Int)	Loss of material	Open-Cycle Cooling Water System (B2.1.9)	VII.C1-15	3.3.1.79	A

Table 3.3.2-3 Auxiliary Systems – Summary of Aging Management Evaluation – Saltwater and Chlorination System (Continued)

Component Type	Intended Function	Material	Environment	Aging Effect Requiring Management	Aging Management Program	NUREG-1801 Vol. 2 Item	Table 1 Item	Notes
Valve	PB	Titanium (Grade 9)	Plant Indoor Air (Ext)	None	None	None	None	F
Valve	PB	Titanium (Grade 9)	Raw Water (Int)	Cracking	Open-Cycle Cooling Water System (B2.1.9)	None	None	F

Notes for Table 3.3.2-3:

Standard Notes:

A Consistent with NUREG-1801 item for component, material, environment, and aging effect. AMP is consistent with NUREG-1801 AMP.

B Consistent with NUREG-1801 item for component, material, environment, and aging effect. AMP takes some exceptions to NUREG-1801 AMP.

C Component is different, but consistent with NUREG-1801 item for material, environment, and aging effect. AMP is consistent with NUREG-1801 AMP.

E Consistent with NUREG-1801 for material, environment, and aging effect, but a different aging management program is credited or NUREG-1801 identifies a plant-specific aging management program.

F Material not in NUREG-1801 for this component.

H Aging effect not in NUREG-1801 for this component, material and environment combination.

Plant Specific Notes:

1 The Loss of preload aging effect is not identified in NUREG-1801 for this component, material, and environment combination. Loss of preload is managed by the Bolting Integrity program (B2.1.7).

Table 3.3.2-4 Auxiliary Systems – Summary of Aging Management Evaluation – Component Cooling Water System

Component Type	Intended Function	Material	Environment	Aging Effect Requiring Management	Aging Management Program	NUREG-1801 Vol. 2 Item	Table 1 Item	Notes
Closure Bolting	LBS, PB, SIA	Carbon Steel	Plant Indoor Air (Ext)	Loss of material	Bolting Integrity (B2.1.7)	VII.I-4	3.3.1.43	B
Closure Bolting	LBS, PB, SIA	Carbon Steel	Plant Indoor Air (Ext)	Loss of preload	Bolting Integrity (B2.1.7)	VII.I-5	3.3.1.45	B
Closure Bolting	LBS, PB, SIA	Stainless Steel	Plant Indoor Air (Ext)	Loss of preload	Bolting Integrity (B2.1.7)	None	None	H, 1
Closure Bolting	LBS, PB, SIA	Stainless Steel	Plant Indoor Air (Ext)	None	None	VII.J-15	3.3.1.94	C
Flexible Hoses	PB	Stainless Steel	Closed Cycle Cooling Water (Int)	Loss of material	Closed-Cycle Cooling Water System (B2.1.10)	VII.C2-10	3.3.1.50	B
Flexible Hoses	PB	Stainless Steel	Dry Gas (Int)	None	None	VII.J-19	3.3.1.97	A
Flexible Hoses	PB	Stainless Steel	Plant Indoor Air (Ext)	None	None	VII.J-15	3.3.1.94	A
Flow Element	PB	Stainless Steel	Closed Cycle Cooling Water (Int)	Loss of material	Closed-Cycle Cooling Water System (B2.1.10)	VII.C2-10	3.3.1.50	B
Flow Element	PB	Stainless Steel	Plant Indoor Air (Ext)	None	None	VII.J-15	3.3.1.94	A
Heat Exchanger (CCW Heat Exchanger)	PB	Carbon Steel	Closed Cycle Cooling Water (Int)	Loss of material	Closed-Cycle Cooling Water System (B2.1.10)	VII.C2-1	3.3.1.48	B
Heat Exchanger (CCW Heat Exchanger)	PB	Carbon Steel	Plant Indoor Air (Ext)	Loss of material	External Surfaces Monitoring Program (B2.1.20)	VII.I-8	3.3.1.58	B

Table 3.3.2-4 Auxiliary Systems – Summary of Aging Management Evaluation – Component Cooling Water System (Continued)

Component Type	Intended Function	Material	Environment	Aging Effect Requiring Management	Aging Management Program	NUREG-1801 Vol. 2 Item	Table 1 Item	Notes
Heat Exchanger (CCW Heat Exchanger)	HT, PB	Copper Alloy	Closed Cycle Cooling Water (Ext)	Reduction of heat transfer	Closed-Cycle Cooling Water System (B2.1.10)	VII.C2-2	3.3.1.52	B
Heat Exchanger (CCW Heat Exchanger)	HT, PB	Copper Alloy	Closed Cycle Cooling Water (Ext)	Loss of material	Closed-Cycle Cooling Water System (B2.1.10)	VII.C2-4	3.3.1.51	D
Heat Exchanger (CCW Heat Exchanger)	PB	Copper Alloy	Plant Indoor Air (Ext)	None	None	VIII.I-2	3.4.1.41	A
Heat Exchanger (CCW Heat Exchanger)	HT, PB	Copper Alloy	Raw Water (Int)	Loss of material	Open-Cycle Cooling Water System (B2.1.9)	VII.C1-3	3.3.1.82	A
Heat Exchanger (CCW Heat Exchanger)	HT, PB	Copper Alloy	Raw Water (Int)	Reduction of heat transfer	Open-Cycle Cooling Water System (B2.1.9)	VII.C1-6	3.3.1.83	A
Heat Exchanger (CCW Heat Exchanger)	PB	Nickel-Alloys	Closed Cycle Cooling Water (Int)	Loss of material	Closed-Cycle Cooling Water System (B2.1.10)	None	None	G

Table 3.3.2-4 Auxiliary Systems – Summary of Aging Management Evaluation – Component Cooling Water System (Continued)

Component Type	Intended Function	Material	Environment	Aging Effect Requiring Management	Aging Management Program	NUREG-1801 Vol. 2 Item	Table 1 Item	Notes
Heat Exchanger (CCW Heat Exchanger)	PB	Nickel-Alloys	Raw Water (Ext)	Loss of material	Open-Cycle Cooling Water System (B2.1.9)	VII.C1-13	3.3.1.78	C
Heat Exchanger (CCW Pump Lube Oil Cooler)	HT, PB	Aluminum	Closed Cycle Cooling Water (Int)	Loss of material	Closed-Cycle Cooling Water System (B2.1.10)	None	None	F
Heat Exchanger (CCW Pump Lube Oil Cooler)	HT, PB	Aluminum	Closed Cycle Cooling Water (Int)	Reduction of heat transfer	Closed-Cycle Cooling Water System (B2.1.10)	None	None	F
Heat Exchanger (CCW Pump Lube Oil Cooler)	HT, PB	Aluminum	Lubricating Oil (Ext)	Loss of material	Lubricating Oil Analysis (B2.1.23) and One-Time Inspection (B2.1.16)	None	None	F
Heat Exchanger (CCW Pump Lube Oil Cooler)	HT, PB	Aluminum	Lubricating Oil (Ext)	Reduction of heat transfer	Lubricating Oil Analysis (B2.1.23) and One-Time Inspection (B2.1.16)	None	None	F

Table 3.3.2-4 Auxiliary Systems – Summary of Aging Management Evaluation – Component Cooling Water System (Continued)

Component Type	Intended Function	Material	Environment	Aging Effect Requiring Management	Aging Management Program	NUREG-1801 Vol. 2 Item	Table 1 Item	Notes
Heat Exchanger (CCW Pump Lube Oil Cooler)	PB	Carbon Steel	Lubricating Oil (Int)	Loss of material	Lubricating Oil Analysis (B2.1.23) and One-Time Inspection (B2.1.16)	VII.C2-13	3.3.1.14	D
Heat Exchanger (CCW Pump Lube Oil Cooler)	PB	Carbon Steel	Plant Indoor Air (Ext)	Loss of material	External Surfaces Monitoring Program (B2.1.20)	VII.I-8	3.3.1.58	B
Heat Exchanger (RCP Bearing Oil Cooler)	PB, SS	Carbon Steel	Closed Cycle Cooling Water (Int)	Loss of material	Closed-Cycle Cooling Water System (B2.1.10)	VII.C2-1	3.3.1.48	B
Heat Exchanger (RCP Bearing Oil Cooler)	LBS, PB, SS	Carbon Steel	Lubricating Oil (Int)	Loss of material	Lubricating Oil Analysis (B2.1.23) and One-Time Inspection (B2.1.16)	VII.C2-13	3.3.1.14	D
Heat Exchanger (RCP Bearing Oil Cooler)	LBS, PB, SS	Carbon Steel	Plant Indoor Air (Ext)	Loss of material	External Surfaces Monitoring Program (B2.1.20)	VII.I-8	3.3.1.58	B
Heat Exchanger (RCP Bearing Oil Cooler)	PB, SS	Copper Alloy	Closed Cycle Cooling Water (Ext)	Loss of material	Closed-Cycle Cooling Water System (B2.1.10)	VII.C2-4	3.3.1.51	D

Table 3.3.2-4 Auxiliary Systems – Summary of Aging Management Evaluation – Component Cooling Water System (Continued)

Component Type	Intended Function	Material	Environment	Aging Effect Requiring Management	Aging Management Program	NUREG-1801 Vol. 2 Item	Table 1 Item	Notes
Heat Exchanger (RCP Bearing Oil Cooler)	PB, SS	Copper Alloy	Closed Cycle Cooling Water (Int)	Loss of material	Closed-Cycle Cooling Water System (B2.1.10)	VII.C2-4	3.3.1.51	D
Heat Exchanger (RCP Bearing Oil Cooler)	PB, SS	Copper Alloy	Lubricating Oil (Ext)	Loss of material	Lubricating Oil Analysis (B2.1.23) and One-Time Inspection (B2.1.16)	VII.C1-8	3.3.1.26	D
Heat Exchanger (RCP Bearing Oil Cooler)	PB, SS	Copper Alloy	Lubricating Oil (Int)	Loss of material	Lubricating Oil Analysis (B2.1.23) and One-Time Inspection (B2.1.16)	VII.C1-8	3.3.1.26	D
Heat Exchanger (RHR Pump Seal Water Cooler)	PB	Carbon Steel	Closed Cycle Cooling Water (Int)	Loss of material	Closed-Cycle Cooling Water System (B2.1.10)	VII.C2-1	3.3.1.48	B
Heat Exchanger (RHR Pump Seal Water Cooler)	PB	Carbon Steel	Plant Indoor Air (Ext)	Loss of material	External Surfaces Monitoring Program (B2.1.20)	VII.I-8	3.3.1.58	B
Heat Exchanger (RHR Pump Seal Water Cooler)	HT, PB	Stainless Steel	Closed Cycle Cooling Water (Ext)	Reduction of heat transfer	Closed-Cycle Cooling Water System (B2.1.10)	VII.C2-3	3.3.1.52	B

Table 3.3.2-4 Auxiliary Systems – Summary of Aging Management Evaluation – Component Cooling Water System (Continued)

Component Type	Intended Function	Material	Environment	Aging Effect Requiring Management	Aging Management Program	NUREG-1801 Vol. 2 Item	Table 1 Item	Notes
Heat Exchanger (RHR Pump Seal Water Cooler)	HT, PB	Stainless Steel	Closed Cycle Cooling Water (Ext)	Loss of material	Closed-Cycle Cooling Water System (B2.1.10)	VII.C2-10	3.3.1.50	D
Heat Exchanger (RHR Pump Seal Water Cooler)	HT, PB	Stainless Steel	Treated Borated Water (Int)	Reduction of heat transfer	Water Chemistry (B2.1.2) and One-Time Inspection (B2.1.16)	None	None	H, 3
Heat Exchanger (RHR Pump Seal Water Cooler)	HT, PB	Stainless Steel	Treated Borated Water (Int)	Cracking	Water Chemistry (B2.1.2) and One-Time Inspection (B2.1.16)	VII.E1-5	3.3.1.08	E, 2
Indicator	PB	Carbon Steel	Closed Cycle Cooling Water (Int)	Loss of material	Closed-Cycle Cooling Water System (B2.1.10)	VII.C2-14	3.3.1.47	B
Indicator	PB	Carbon Steel	Plant Indoor Air (Ext)	Loss of material	External Surfaces Monitoring Program (B2.1.20)	VII.I-8	3.3.1.58	B
Orifice	PB, TH	Carbon Steel	Closed Cycle Cooling Water (Int)	Loss of material	Closed-Cycle Cooling Water System (B2.1.10)	VII.C2-14	3.3.1.47	B
Orifice	PB, TH	Carbon Steel	Plant Indoor Air (Ext)	Loss of material	External Surfaces Monitoring Program (B2.1.20)	VII.I-8	3.3.1.58	B
Orifice	PB, TH	Stainless Steel	Closed Cycle Cooling Water (Int)	Loss of material	Closed-Cycle Cooling Water System (B2.1.10)	VII.C2-10	3.3.1.50	B

Table 3.3.2-4 Auxiliary Systems – Summary of Aging Management Evaluation – Component Cooling Water System (Continued)

Component Type	Intended Function	Material	Environment	Aging Effect Requiring Management	Aging Management Program	NUREG-1801 Vol. 2 Item	Table 1 Item	Notes
Orifice	PB, TH	Stainless Steel	Plant Indoor Air (Ext)	None	None	VII.J-15	3.3.1.94	A
Piping	LBS, PB, SIA	Carbon Steel	Closed Cycle Cooling Water (Int)	Loss of material	Closed-Cycle Cooling Water System (B2.1.10)	VII.C2-14	3.3.1.47	B
Piping	PB	Carbon Steel	Demineralized Water (Int)	Loss of material	Water Chemistry (B2.1.2) and One-Time Inspection (B2.1.16)	VIII.D1-8	3.4.1.04	A
Piping	PB	Carbon Steel	Dry Gas (Int)	None	None	VII.J-22	3.3.1.98	A
Piping	LBS, PB, SIA	Carbon Steel	Plant Indoor Air (Ext)	Loss of material	External Surfaces Monitoring Program (B2.1.20)	VII.I-8	3.3.1.58	B
Piping	PB	Stainless Steel	Closed Cycle Cooling Water (Int)	Loss of material	Closed-Cycle Cooling Water System (B2.1.10)	VII.C2-10	3.3.1.50	B
Piping	PB	Stainless Steel	Demineralized Water (Int)	Loss of material	Water Chemistry (B2.1.2) and One-Time Inspection (B2.1.16)	VIII.D1-4	3.4.1.16	A
Piping	PB	Stainless Steel	Plant Indoor Air (Ext)	None	None	VII.J-15	3.3.1.94	A
Pump	PB	Carbon Steel	Closed Cycle Cooling Water (Int)	Loss of material	Closed-Cycle Cooling Water System (B2.1.10)	VII.C2-14	3.3.1.47	B
Pump	PB	Carbon Steel	Plant Indoor Air (Ext)	Loss of material	External Surfaces Monitoring Program (B2.1.20)	VII.I-8	3.3.1.58	B
Regulators	PB	Cast Iron	Dry Gas (Int)	None	None	VII.J-23	3.3.1.97	A

Table 3.3.2-4 Auxiliary Systems – Summary of Aging Management Evaluation – Component Cooling Water System (Continued)

Component Type	Intended Function	Material	Environment	Aging Effect Requiring Management	Aging Management Program	NUREG-1801 Vol. 2 Item	Table 1 Item	Notes
Regulators	PB	Cast Iron	Plant Indoor Air (Ext)	Loss of material	External Surfaces Monitoring Program (B2.1.20)	VII.I-8	3.3.1.58	B
Regulators	PB	Copper Alloy	Dry Gas (Int)	None	None	VII.J-4	3.3.1.97	A
Regulators	PB	Copper Alloy	Plant Indoor Air (Ext)	None	None	VIII.I-2	3.4.1.41	A
Regulators	PB	Stainless Steel	Dry Gas (Int)	None	None	VII.J-19	3.3.1.97	A
Regulators	PB	Stainless Steel	Plant Indoor Air (Ext)	None	None	VII.J-15	3.3.1.94	A
Sight Gauge	PB	Glass	Closed Cycle Cooling Water (Int)	None	None	VII.J-13	3.3.1.93	A
Sight Gauge	PB	Glass	Plant Indoor Air (Ext)	None	None	VIII.I-5	3.4.1.40	A
Strainer	FIL, PB	Carbon Steel	Closed Cycle Cooling Water (Int)	Loss of material	Closed-Cycle Cooling Water System (B2.1.10)	VII.C2-14	3.3.1.47	B
Strainer	FIL, PB	Carbon Steel	Plant Indoor Air (Ext)	Loss of material	External Surfaces Monitoring Program (B2.1.20)	VII.I-8	3.3.1.58	B
Tank	LBS, PB, SIA	Carbon Steel	Closed Cycle Cooling Water (Int)	Loss of material	Closed-Cycle Cooling Water System (B2.1.10)	VII.C2-14	3.3.1.47	B
Tank	LBS	Carbon Steel	Dry Gas (Int)	None	None	VII.J-23	3.3.1.97	A
Tank	LBS, PB, SIA	Carbon Steel	Plant Indoor Air (Ext)	Loss of material	External Surfaces Monitoring Program (B2.1.20)	VII.I-8	3.3.1.58	B

Table 3.3.2-4 Auxiliary Systems – Summary of Aging Management Evaluation – Component Cooling Water System (Continued)

Component Type	Intended Function	Material	Environment	Aging Effect Requiring Management	Aging Management Program	NUREG-1801 Vol. 2 Item	Table 1 Item	Notes
Tank	LBS	Carbon Steel	Plant Indoor Air (Int)	Loss of material	Inspection of Internal Surfaces in Miscellaneous Piping and Ducting Components (B2.1.22)	VII.G-23	3.3.1.71	B
Test Connection	PB	Carbon Steel	Closed Cycle Cooling Water (Int)	Loss of material	Closed-Cycle Cooling Water System (B2.1.10)	VII.C2-14	3.3.1.47	B
Test Connection	PB	Carbon Steel	Plant Indoor Air (Ext)	Loss of material	External Surfaces Monitoring Program (B2.1.20)	VII.I-8	3.3.1.58	B
Thermowell	PB	Stainless Steel	Closed Cycle Cooling Water (Int)	Loss of material	Closed-Cycle Cooling Water System (B2.1.10)	VII.C2-10	3.3.1.50	B
Thermowell	PB	Stainless Steel	Plant Indoor Air (Ext)	None	None	VIII.I-10	3.4.1.41	A
Tubing	PB	Stainless Steel	Closed Cycle Cooling Water (Int)	Loss of material	Closed-Cycle Cooling Water System (B2.1.10)	VII.C2-10	3.3.1.50	B
Tubing	PB	Stainless Steel	Plant Indoor Air (Ext)	None	None	VII.J-15	3.3.1.94	A
Valve	LBS, PB, SIA	Carbon Steel	Closed Cycle Cooling Water (Int)	Loss of material	Closed-Cycle Cooling Water System (B2.1.10)	VII.C2-14	3.3.1.47	B
Valve	PB	Carbon Steel	Demineralized Water (Int)	Loss of material	Water Chemistry (B2.1.2) and One-Time Inspection (B2.1.16)	VIII.D1-8	3.4.1.04	A
Valve	PB	Carbon Steel	Dry Gas (Int)	None	None	VII.J-22	3.3.1.98	A

Table 3.3.2-4 Auxiliary Systems – Summary of Aging Management Evaluation – Component Cooling Water System (Continued)

Component Type	Intended Function	Material	Environment	Aging Effect Requiring Management	Aging Management Program	NUREG-1801 Vol. 2 Item	Table 1 Item	Notes
Valve	LBS, PB, SIA	Carbon Steel	Plant Indoor Air (Ext)	Loss of material	External Surfaces Monitoring Program (B2.1.20)	VII.I-8	3.3.1.58	B
Valve	PB	Copper Alloy	Closed Cycle Cooling Water (Int)	Loss of material	Closed-Cycle Cooling Water System (B2.1.10)	VII.C2-4	3.3.1.51	B
Valve	PB	Copper Alloy	Plant Indoor Air (Ext)	None	None	VIII.I-2	3.4.1.41	A
Valve	LBS, PB, SIA	Stainless Steel	Closed Cycle Cooling Water (Int)	Loss of material	Closed-Cycle Cooling Water System (B2.1.10)	VII.C2-10	3.3.1.50	B
Valve	PB	Stainless Steel	Demineralized Water (Int)	Loss of material	Water Chemistry (B2.1.2) and One-Time Inspection (B2.1.16)	VIII.D1-4	3.4.1.16	A
Valve	PB	Stainless Steel	Dry Gas (Int)	None	None	VII.J-19	3.3.1.97	A
Valve	LBS, PB, SIA	Stainless Steel	Plant Indoor Air (Ext)	None	None	VII.J-15	3.3.1.94	A
Valve	PB	Stainless Steel Cast Austenitic	Closed Cycle Cooling Water (Int)	Loss of material	Closed-Cycle Cooling Water System (B2.1.10)	VII.C2-10	3.3.1.50	B
Valve	PB	Stainless Steel Cast Austenitic	Dry Gas (Int)	None	None	VII.J-19	3.3.1.97	A
Valve	PB	Stainless Steel Cast Austenitic	Plant Indoor Air (Ext)	None	None	VII.J-15	3.3.1.94	A

Notes for Table 3.3.2-4:

Standard Notes:

A Consistent with NUREG-1801 item for component, material, environment, and aging effect. AMP is consistent with NUREG-1801 AMP.

B Consistent with NUREG-1801 item for component, material, environment, and aging effect. AMP takes some exceptions to NUREG-1801 AMP.

C Component is different, but consistent with NUREG-1801 item for material, environment, and aging effect. AMP is consistent with NUREG-1801 AMP.

D Component is different, but consistent with NUREG-1801 item for material, environment, and aging effect. AMP takes some exceptions to NUREG-1801 AMP.

E Consistent with NUREG-1801 for material, environment, and aging effect, but a different aging management program is credited or NUREG-1801 identifies a plant-specific aging management program.

F Material not in NUREG-1801 for this component.

G Environment not in NUREG-1801 for this component and material.

H Aging effect not in NUREG-1801 for this component, material and environment combination.

Plant Specific Notes:

1 The loss of preload aging effect is not identified in NUREG-1801 for this component, material, and environment combination. Loss of preload is managed by the Bolting Integrity program (B2.1.7).

2 One-Time Inspection program (B2.1.16) is selected as the plant-specific program to monitor the effectiveness of Water Chemistry (B2.1.2) in managing the cracking aging effect in this component-material-environment.

3 The reduction of heat transfer aging effect is not identified in NUREG-1801 for this component, material, and environment combination. Reduction of heat transfer is not expected in heat exchangers with reactor coolant or treated borated water environments as long as water chemistry is maintained. Reduction of heat transfer is managed with Water Chemistry (B2.1.2) and One Time Inspection (B2.1.16).

Table 3.3.2-5 Auxiliary Systems – Summary of Aging Management Evaluation – Makeup Water System

Component Type	Intended Function	Material	Environment	Aging Effect Requiring Management	Aging Management Program	NUREG-1801 Vol. 2 Item	Table 1 Item	Notes
Closure Bolting	LBS, PB	Carbon Steel	Atmosphere/ Weather (Ext)	Loss of preload	Bolting Integrity (B2.1.7)	None	None	H, 1
Closure Bolting	LBS, PB	Carbon Steel	Atmosphere/ Weather (Ext)	Loss of material	Bolting Integrity (B2.1.7)	VII.I-1	3.3.1.43	B
Closure Bolting	LBS, PB	Carbon Steel	Plant Indoor Air (Ext)	Loss of material	Bolting Integrity (B2.1.7)	VII.I-4	3.3.1.43	B
Closure Bolting	LBS, PB	Carbon Steel	Plant Indoor Air (Ext)	Loss of preload	Bolting Integrity (B2.1.7)	VII.I-5	3.3.1.45	B
Closure Bolting	LBS, PB	Stainless Steel	Atmosphere/ Weather (Ext)	Loss of preload	Bolting Integrity (B2.1.7)	None	None	H, 1
Closure Bolting	LBS, PB	Stainless Steel	Atmosphere/ Weather (Ext)	Loss of material	External Surfaces Monitoring Program (B2.1.20)	None	None	G
Closure Bolting	LBS, PB	Stainless Steel	Plant Indoor Air (Ext)	Loss of preload	Bolting Integrity (B2.1.7)	None	None	H, 1
Closure Bolting	LBS, PB	Stainless Steel	Plant Indoor Air (Ext)	None	None	VII.J-15	3.3.1.94	C
Eductor	LBS	Stainless Steel	Demineralized Water (Int)	Loss of material	Water Chemistry (B2.1.2) and One-Time Inspection (B2.1.16)	VIII.E-29	3.4.1.16	A
Eductor	LBS	Stainless Steel	Plant Indoor Air (Ext)	None	None	VII.J-15	3.3.1.94	A
Flexible Hoses	LBS	Stainless Steel	Demineralized Water (Int)	Loss of material	Water Chemistry (B2.1.2) and One-Time Inspection (B2.1.16)	VIII.E-29	3.4.1.16	A

Table 3.3.2-5 Auxiliary Systems – Summary of Aging Management Evaluation – Makeup Water System (Continued)

Component Type	Intended Function	Material	Environment	Aging Effect Requiring Management	Aging Management Program	NUREG-1801 Vol. 2 Item	Table 1 Item	Notes
Flexible Hoses	LBS	Stainless Steel	Plant Indoor Air (Ext)	None	None	VII.J-15	3.3.1.94	A
Flow Element	LBS	Copper Alloy	Plant Indoor Air (Ext)	None	None	VIII.I-2	3.4.1.41	A
Flow Element	LBS	Copper Alloy	Potable Water (Int)	Loss of material	Inspection of Internal Surfaces in Miscellaneous Piping and Ducting Components (B2.1.22)	None	None	G
Flow Element	LBS	Stainless Steel	Plant Indoor Air (Ext)	None	None	VII.J-15	3.3.1.94	A
Flow Element	LBS	Stainless Steel	Raw Water (Int)	Loss of material	Fire Water System (B2.1.13)	VII.G-19	3.3.1.69	B
Heater	LBS	Copper Alloy	Plant Indoor Air (Ext)	None	None	VIII.I-2	3.4.1.41	A
Heater	LBS	Copper Alloy	Potable Water (Int)	Loss of material	Inspection of Internal Surfaces in Miscellaneous Piping and Ducting Components (B2.1.22)	None	None	G
Orifice	LBS, PB, TH	Stainless Steel	Demineralized Water (Int)	Loss of material	Water Chemistry (B2.1.2) and One-Time Inspection (B2.1.16)	VIII.E-29	3.4.1.16	A
Orifice	LBS, PB, TH	Stainless Steel	Plant Indoor Air (Ext)	None	None	VII.J-15	3.3.1.94	A

Table 3.3.2-5 Auxiliary Systems – Summary of Aging Management Evaluation – Makeup Water System (Continued)

Component Type	Intended Function	Material	Environment	Aging Effect Requiring Management	Aging Management Program	NUREG-1801 Vol. 2 Item	Table 1 Item	Notes
Piping	PB	Asbestos Cement	Buried (Ext)	Loss of material, cracking and changes in material properties	Buried Piping and Tanks Inspection (B2.1.18)	None	None	F
Piping	PB	Asbestos Cement	Raw Water (Int)	Loss of material, cracking and changes in material properties	Inspection of Internal Surfaces in Miscellaneous Piping and Ducting Components (B2.1.22)	None	None	F
Piping	LBS, PB, SIA	Carbon Steel	Atmosphere/ Weather (Ext)	Loss of material	External Surfaces Monitoring Program (B2.1.20)	VII.I-9	3.3.1.58	B
Piping	LBS, PB, SIA	Carbon Steel	Demineralized Water (Int)	Loss of material	Water Chemistry (B2.1.2) and One-Time Inspection (B2.1.16)	VIII.E-34	3.4.1.04	A
Piping	PB	Carbon Steel	Encased in Concrete (Ext)	None	None	VII.J-21	3.3.1.96	A
Piping	LBS, PB, SIA	Carbon Steel	Plant Indoor Air (Ext)	Loss of material	External Surfaces Monitoring Program (B2.1.20)	VII.I-8	3.3.1.58	B
Piping	LBS, PB, SIA	Carbon Steel	Raw Water (Int)	Loss of material	Fire Water System (B2.1.13)	VII.G-24	3.3.1.68	B
Piping	LBS	Carbon Steel	Sodium Hydroxide (Int)	Loss of material	Water Chemistry (B2.1.2) and One-Time Inspection (B2.1.16)	None	None	G, 3

Table 3.3.2-5 Auxiliary Systems – Summary of Aging Management Evaluation – Makeup Water System (Continued)

Component Type	Intended Function	Material	Environment	Aging Effect Requiring Management	Aging Management Program	NUREG-1801 Vol. 2 Item	Table 1 Item	Notes
Piping	LBS	Copper Alloy	Demineralized Water (Int)	Loss of material	Water Chemistry (B2.1.2) and One-Time Inspection (B2.1.16)	VIII.A-5	3.4.1.15	A
Piping	LBS	Copper Alloy	Plant Indoor Air (Ext)	None	None	VIII.I-2	3.4.1.41	A
Piping	LBS, PB, SIA	Stainless Steel	Atmosphere/ Weather (Ext)	Loss of material	External Surfaces Monitoring Program (B2.1.20)	None	None	G
Piping	LBS, PB, SIA	Stainless Steel	Demineralized Water (Int)	Loss of material	Water Chemistry (B2.1.2) and One-Time Inspection (B2.1.16)	VIII.E-29	3.4.1.16	A
Piping	LBS, PB, SIA	Stainless Steel	Plant Indoor Air (Ext)	None	None	VII.J-15	3.3.1.94	A
Piping	LBS, PB	Stainless Steel	Raw Water (Int)	Loss of material	Fire Water System (B2.1.13)	VII.G-19	3.3.1.69	B
Piping	LBS	Stainless Steel	Sodium Hydroxide (Int)	Loss of material	Water Chemistry (B2.1.2) and One-Time Inspection (B2.1.16)	None	None	G, 2
Piping	LBS	Stainless Steel	Sulfuric Acid (Int)	Loss of material	Inspection of Internal Surfaces in Miscellaneous Piping and Ducting Components (B2.1.22)	None	None	G
Pump	LBS	Carbon Steel	Demineralized Water (Int)	Loss of material	Water Chemistry (B2.1.2) and One-Time Inspection (B2.1.16)	VIII.E-34	3.4.1.04	A

Table 3.3.2-5 Auxiliary Systems – Summary of Aging Management Evaluation – Makeup Water System (Continued)

Component Type	Intended Function	Material	Environment	Aging Effect Requiring Management	Aging Management Program	NUREG-1801 Vol. 2 Item	Table 1 Item	Notes
Pump	LBS	Carbon Steel	Plant Indoor Air (Ext)	Loss of material	External Surfaces Monitoring Program (B2.1.20)	VII.I-8	3.3.1.58	B
Pump	LBS	Carbon Steel	Potable Water (Int)	Loss of material	Inspection of Internal Surfaces in Miscellaneous Piping and Ducting Components (B2.1.22)	None	None	G
Pump	PB	Cast Iron (Gray Cast Iron)	Demineralized Water (Int)	Loss of material	Selective Leaching of Materials (B2.1.17)	VII.C2-9	3.3.1.85	A
Pump	PB	Cast Iron (Gray Cast Iron)	Plant Indoor Air (Ext)	Loss of material	External Surfaces Monitoring Program (B2.1.20)	VII.I-8	3.3.1.58	B
Pump	LBS	Stainless Steel	Demineralized Water (Int)	Loss of material	Water Chemistry (B2.1.2) and One-Time Inspection (B2.1.16)	VIII.E-29	3.4.1.16	A
Pump	LBS	Stainless Steel	Plant Indoor Air (Ext)	None	None	VII.J-15	3.3.1.94	A
Pump	LBS	Stainless Steel	Sodium Hydroxide (Int)	Loss of material	Water Chemistry (B2.1.2) and One-Time Inspection (B2.1.16)	None	None	G, 2
Sample Sink	LBS	Stainless Steel	Demineralized Water (Int)	Loss of material	Water Chemistry (B2.1.2) and One-Time Inspection (B2.1.16)	VIII.E-29	3.4.1.16	C
Sample Sink	LBS	Stainless Steel	Plant Indoor Air (Ext)	None	None	VII.J-15	3.3.1.94	C

Table 3.3.2-5 Auxiliary Systems – Summary of Aging Management Evaluation – Makeup Water System (Continued)

Component Type	Intended Function	Material	Environment	Aging Effect Requiring Management	Aging Management Program	NUREG-1801 Vol. 2 Item	Table 1 Item	Notes
Sample Sink	LBS	Stainless Steel	Potable Water (Int)	Loss of material	Inspection of Internal Surfaces in Miscellaneous Piping and Ducting Components (B2.1.22)	None	None	G
Sample Vessel	LBS	Stainless Steel	Demineralized Water (Int)	Loss of material	Water Chemistry (B2.1.2) and One-Time Inspection (B2.1.16)	VIII.E-29	3.4.1.16	A
Sample Vessel	LBS	Stainless Steel	Plant Indoor Air (Ext)	None	None	VII.J-15	3.3.1.94	A
Screen	FIL	Stainless Steel	Atmosphere/ Weather (Ext)	Loss of material	External Surfaces Monitoring Program (B2.1.20)	None	None	G
Screen	FIL	Stainless Steel	Plant Indoor Air (Ext)	None	None	VII.J-15	3.3.1.94	A
Strainer	LBS	Stainless Steel	Plant Indoor Air (Ext)	None	None	VII.J-15	3.3.1.94	A
Strainer	LBS	Stainless Steel	Raw Water (Int)	Loss of material	Fire Water System (B2.1.13)	VII.G-19	3.3.1.69	B
Strainer	LBS	Stainless Steel	Sodium Hydroxide (Int)	Loss of material	Water Chemistry (B2.1.2) and One-Time Inspection (B2.1.16)	None	None	G, 2
Tank	LBS, PB	Carbon Steel	Demineralized Water (Int)	Loss of material	Water Chemistry (B2.1.2) and One-Time Inspection (B2.1.16)	VIII.E-34	3.4.1.04	C
Tank	PB	Carbon Steel	Encased in Concrete (Ext)	None	None	VII.J-21	3.3.1.96	C

Table 3.3.2-5 Auxiliary Systems – Summary of Aging Management Evaluation – Makeup Water System (Continued)

Component Type	Intended Function	Material	Environment	Aging Effect Requiring Management	Aging Management Program	NUREG-1801 Vol. 2 Item	Table 1 Item	Notes
Tank	LBS	Carbon Steel	Plant Indoor Air (Ext)	Loss of material	External Surfaces Monitoring Program (B2.1.20)	VII.I-8	3.3.1.58	B
Tank	LBS, PB	Carbon Steel	Plant Indoor Air (Int)	Loss of material	Inspection of Internal Surfaces in Miscellaneous Piping and Ducting Components (B2.1.22)	VII.G-23	3.3.1.71	D
Tank	LBS	Carbon Steel	Potable Water (Int)	Loss of material	Inspection of Internal Surfaces in Miscellaneous Piping and Ducting Components (B2.1.22)	None	None	G
Tank	LBS	Carbon Steel	Sodium Hydroxide (Int)	Loss of material	Water Chemistry (B2.1.2) and One-Time Inspection (B2.1.16)	None	None	G, 3
Tank	LBS	Copper Alloy	Plant Indoor Air (Ext)	None	None	VIII.I-2	3.4.1.41	C
Tank	LBS	Copper Alloy	Potable Water (Int)	Loss of material	Inspection of Internal Surfaces in Miscellaneous Piping and Ducting Components (B2.1.22)	None	None	G
Test Connection	PB	Carbon Steel	Demineralized Water (Int)	Loss of material	Water Chemistry (B2.1.2) and One-Time Inspection (B2.1.16)	VIII.E-34	3.4.1.04	A

Table 3.3.2-5 Auxiliary Systems – Summary of Aging Management Evaluation – Makeup Water System (Continued)

Component Type	Intended Function	Material	Environment	Aging Effect Requiring Management	Aging Management Program	NUREG-1801 Vol. 2 Item	Table 1 Item	Notes
Test Connection	PB	Carbon Steel	Plant Indoor Air (Ext)	Loss of material	External Surfaces Monitoring Program (B2.1.20)	VII.I-8	3.3.1.58	B
Trap	LBS, PB	Cast Iron	Atmosphere/ Weather (Ext)	Loss of material	External Surfaces Monitoring Program (B2.1.20)	VII.I-9	3.3.1.58	B
Trap	LBS, PB	Cast Iron	Raw Water (Int)	Loss of material	Fire Water System (B2.1.13)	VII.G-24	3.3.1.68	B
Trap	LBS	Copper Alloy	Plant Indoor Air (Ext)	None	None	VIII.I-2	3.4.1.41	A
Trap	LBS	Copper Alloy	Potable Water (Int)	Loss of material	Inspection of Internal Surfaces in Miscellaneous Piping and Ducting Components (B2.1.22)	None	None	G
Trap	LBS	Stainless Steel	Plant Indoor Air (Ext)	None	None	VII.J-15	3.3.1.94	A
Trap	LBS	Stainless Steel	Raw Water (Int)	Loss of material	Fire Water System (B2.1.13)	VII.G-19	3.3.1.69	B
Tubing	LBS, PB	Stainless Steel	Atmosphere/ Weather (Ext)	Loss of material	External Surfaces Monitoring Program (B2.1.20)	None	None	G
Tubing	LBS, PB	Stainless Steel	Demineralized Water (Int)	Loss of material	Water Chemistry (B2.1.2) and One-Time Inspection (B2.1.16)	VIII.E-29	3.4.1.16	A
Tubing	LBS, PB	Stainless Steel	Plant Indoor Air (Ext)	None	None	VII.J-15	3.3.1.94	A

Table 3.3.2-5 Auxiliary Systems – Summary of Aging Management Evaluation – Makeup Water System (Continued)

Component Type	Intended Function	Material	Environment	Aging Effect Requiring Management	Aging Management Program	NUREG-1801 Vol. 2 Item	Table 1 Item	Notes
Valve	PB	Carbon Steel	Atmosphere/ Weather (Ext)	Loss of material	External Surfaces Monitoring Program (B2.1.20)	VII.I-9	3.3.1.58	B
Valve	LBS, PB, SIA	Carbon Steel	Demineralized Water (Int)	Loss of material	Water Chemistry (B2.1.2) and One-Time Inspection (B2.1.16)	VIII.E-34	3.4.1.04	A
Valve	LBS, PB, SIA	Carbon Steel	Plant Indoor Air (Ext)	Loss of material	External Surfaces Monitoring Program (B2.1.20)	VII.I-8	3.3.1.58	B
Valve	LBS	Carbon Steel	Potable Water (Int)	Loss of material	Inspection of Internal Surfaces in Miscellaneous Piping and Ducting Components (B2.1.22)	None	None	G
Valve	LBS, PB, SIA	Carbon Steel	Raw Water (Int)	Loss of material	Fire Water System (B2.1.13)	VII.G-24	3.3.1.68	B
Valve	LBS	Carbon Steel	Sodium Hydroxide (Int)	Loss of material	Water Chemistry (B2.1.2) and One-Time Inspection (B2.1.16)	None	None	G, 3
Valve	PB	Cast Iron	Atmosphere/ Weather (Ext)	Loss of material	External Surfaces Monitoring Program (B2.1.20)	VII.I-9	3.3.1.58	B
Valve	LBS	Cast Iron	Demineralized Water (Int)	Loss of material	Water Chemistry (B2.1.2) and One-Time Inspection (B2.1.16)	VIII.E-34	3.4.1.04	A
Valve	LBS	Cast Iron	Plant Indoor Air (Ext)	Loss of material	External Surfaces Monitoring Program (B2.1.20)	VII.I-8	3.3.1.58	B

Table 3.3.2-5 Auxiliary Systems – Summary of Aging Management Evaluation – Makeup Water System (Continued)

Component Type	Intended Function	Material	Environment	Aging Effect Requiring Management	Aging Management Program	NUREG-1801 Vol. 2 Item	Table 1 Item	Notes
Valve	LBS	Cast Iron	Potable Water (Int)	Loss of material	Inspection of Internal Surfaces in Miscellaneous Piping and Ducting Components (B2.1.22)	None	None	G
Valve	PB	Cast Iron	Raw Water (Int)	Loss of material	Fire Water System (B2.1.13)	VII.G-24	3.3.1.68	B
Valve	LBS	Cast Iron (Gray Cast Iron)	Demineralized Water (Int)	Loss of material	Selective Leaching of Materials (B2.1.17)	VII.C2-9	3.3.1.85	A
Valve	LBS, PB	Cast Iron (Gray Cast Iron)	Plant Indoor Air (Ext)	Loss of material	External Surfaces Monitoring Program (B2.1.20)	VII.I-8	3.3.1.58	B
Valve	LBS, PB	Cast Iron (Gray Cast Iron)	Raw Water (Int)	Loss of material	Selective Leaching of Materials (B2.1.17)	VII.G-14	3.3.1.85	A
Valve	LBS, PB	Cast Iron (Gray Cast Iron)	Raw Water (Int)	Loss of material	Fire Water System (B2.1.13)	VII.G-24	3.3.1.68	B
Valve	PB	Copper Alloy	Atmosphere/ Weather (Ext)	Loss of material	External Surfaces Monitoring Program (B2.1.20)	None	None	G
Valve	LBS	Copper Alloy	Demineralized Water (Int)	Loss of material	Water Chemistry (B2.1.2) and One-Time Inspection (B2.1.16)	VIII.A-5	3.4.1.15	A
Valve	LBS	Copper Alloy	Plant Indoor Air (Ext)	None	None	VIII.I-2	3.4.1.41	A

Table 3.3.2-5 Auxiliary Systems – Summary of Aging Management Evaluation – Makeup Water System (Continued)

Component Type	Intended Function	Material	Environment	Aging Effect Requiring Management	Aging Management Program	NUREG-1801 Vol. 2 Item	Table 1 Item	Notes
Valve	LBS	Copper Alloy	Potable Water (Int)	Loss of material	Inspection of Internal Surfaces in Miscellaneous Piping and Ducting Components (B2.1.22)	None	None	G
Valve	PB	Copper Alloy	Raw Water (Int)	Loss of material	Fire Water System (B2.1.13)	VII.G-24	3.3.1.68	B
Valve	LBS	Copper Alloy	Sodium Hydroxide (Int)	Loss of material	Water Chemistry (B2.1.2) and One-Time Inspection (B2.1.16)	None	None	G, 4
Valve	PB	Stainless Steel	Atmosphere/ Weather (Ext)	Loss of material	External Surfaces Monitoring Program (B2.1.20)	None	None	G
Valve	LBS, PB, SIA	Stainless Steel	Demineralized Water (Int)	Loss of material	Water Chemistry (B2.1.2) and One-Time Inspection (B2.1.16)	VIII.E-29	3.4.1.16	A
Valve	LBS, PB, SIA	Stainless Steel	Plant Indoor Air (Ext)	None	None	VII.J-15	3.3.1.94	A
Valve	LBS, PB	Stainless Steel	Raw Water (Int)	Loss of material	Fire Water System (B2.1.13)	VII.G-19	3.3.1.69	B
Valve	LBS	Stainless Steel	Sodium Hydroxide (Int)	Loss of material	Water Chemistry (B2.1.2) and One-Time Inspection (B2.1.16)	None	None	G, 2
Valve	LBS	Stainless Steel	Sulfuric Acid (Int)	Loss of material	Inspection of Internal Surfaces in Miscellaneous Piping and Ducting Components (B2.1.22)	None	None	G

Table 3.3.2-5 Auxiliary Systems – Summary of Aging Management Evaluation – Makeup Water System (Continued)

Component Type	Intended Function	Material	Environment	Aging Effect Requiring Management	Aging Management Program	NUREG-1801 Vol. 2 Item	Table 1 Item	Notes
Valve	LBS, PB, SIA	Stainless Steel Cast Austenitic	Demineralized Water (Int)	Loss of material	Water Chemistry (B2.1.2) and One-Time Inspection (B2.1.16)	VIII.E-29	3.4.1.16	A
Valve	LBS, PB, SIA	Stainless Steel Cast Austenitic	Plant Indoor Air (Ext)	None	None	VII.J-15	3.3.1.94	A
Valve	LBS	Stainless Steel Cast Austenitic	Sodium Hydroxide (Int)	Loss of material	Water Chemistry (B2.1.2) and One-Time Inspection (B2.1.16)	None	None	G, 2
Vent	PB	Carbon Steel (Galvanized)	Atmosphere/ Weather (Ext)	Loss of material	External Surfaces Monitoring Program (B2.1.20)	VII.I-9	3.3.1.58	B
Vent	PB	Carbon Steel (Galvanized)	Plant Indoor Air (Int)	Loss of material	Inspection of Internal Surfaces in Miscellaneous Piping and Ducting Components (B2.1.22)	VII.G-23	3.3.1.71	B

Notes for Table 3.3.2-5:

Standard Notes:

A Consistent with NUREG-1801 item for component, material, environment, and aging effect. AMP is consistent with NUREG-1801 AMP.

B Consistent with NUREG-1801 item for component, material, environment, and aging effect. AMP takes some exceptions to NUREG-1801 AMP.

C Component is different, but consistent with NUREG-1801 item for material, environment, and aging effect. AMP is consistent with NUREG-1801 AMP.

D Component is different, but consistent with NUREG-1801 item for material, environment, and aging effect. AMP takes some exceptions to NUREG-1801 AMP.
F Material not in NUREG-1801 for this component.
G Environment not in NUREG-1801 for this component and material.
H Aging effect not in NUREG-1801 for this component, material and environment combination.

Plant Specific Notes:

1 The loss of preload aging effect is not identified in NUREG-1801 for this component, material, and environment combination. Loss of preload is managed by the Bolting Integrity program (B2.1.7).

2 There is no NUREG-1801 line for the environment of NaOH. The use of stainless steel up to 200° F and 50 weight percent NaOH is common in industrial applications with no special consideration for aging. The NaOH concentration is controlled by the Water Chemistry program. Therefore, the Water Chemistry program (B2.1.2), supplemented by the One-Time Inspection program (B2.1.16), has been selected as the aging management program.

3 There is no NUREG-1801 line for the environment of NaOH. The use of carbon steel up to 200° F and 50 weight percent NaOH is common in industrial applications with no special consideration for aging. The NaOH concentration is controlled by the Water Chemistry program. Therefore, the Water Chemistry program (B2.1.2), supplemented by the One-Time Inspection program (B2.1.16), has been selected as the aging management program.

4 There is no NUREG-1801 line for the environment of NaOH. The use of copper alloy in non-elevated-temperature environments is common in industrial applications with no special consideration for aging. The NaOH concentration is controlled by the Water Chemistry program. Therefore, the Water Chemistry program (B2.1.2), supplemented by the One-Time Inspection program (B2.1.16), has been selected as the aging management program.

Table 3.3.2-6 Auxiliary Systems – Summary of Aging Management Evaluation – Nuclear Steam Supply Sampling System

Component Type	Intended Function	Material	Environment	Aging Effect Requiring Management	Aging Management Program	NUREG-1801 Vol. 2 Item	Table 1 Item	Notes
Closure Bolting	LBS, SIA	Carbon Steel	Borated Water Leakage (Ext)	Loss of preload	Bolting Integrity (B2.1.7)	IV.C2-8	3.1.1.52	B
Closure Bolting	LBS, SIA	Carbon Steel	Borated Water Leakage (Ext)	Loss of material	Boric Acid Corrosion (B2.1.4)	VII.I-10	3.3.1.89	A
Closure Bolting	LBS, PB	Stainless Steel	Borated Water Leakage (Ext)	Loss of preload	Bolting Integrity (B2.1.7)	IV.C2-8	3.1.1.52	B
Closure Bolting	LBS, PB	Stainless Steel	Borated Water Leakage (Ext)	None	None	VII.J-16	3.3.1.99	C
Closure Bolting	LBS, SIA	Stainless Steel	Plant Indoor Air (Ext)	Loss of preload	Bolting Integrity (B2.1.7)	None	None	H, 1
Closure Bolting	LBS, SIA	Stainless Steel	Plant Indoor Air (Ext)	None	None	VII.J-15	3.3.1.94	C
Heat Exchanger (Hot Leg Sample)	LBS, SIA	Carbon Steel	Closed Cycle Cooling Water (Int)	Loss of material	Closed-Cycle Cooling Water System (B2.1.10)	VII.C2-1	3.3.1.48	B
Heat Exchanger (Hot Leg Sample)	LBS, SIA	Carbon Steel	Plant Indoor Air (Ext)	Loss of material	External Surfaces Monitoring Program (B2.1.20)	VII.I-8	3.3.1.58	B
Heat Exchanger (Liquid Sample)	LBS, SIA	Carbon Steel	Closed Cycle Cooling Water (Int)	Loss of material	Closed-Cycle Cooling Water System (B2.1.10)	VII.C2-1	3.3.1.48	B

Table 3.3.2-6 Auxiliary Systems – Summary of Aging Management Evaluation – Nuclear Steam Supply Sampling System (Continued)

Component Type	Intended Function	Material	Environment	Aging Effect Requiring Management	Aging Management Program	NUREG-1801 Vol. 2 Item	Table 1 Item	Notes
Heat Exchanger (Liquid Sample)	LBS, SIA	Carbon Steel	Plant Indoor Air (Ext)	Loss of material	External Surfaces Monitoring Program (B2.1.20)	VII.I-8	3.3.1.58	B
Heat Exchanger (Liquid Sample)	SIA	Stainless Steel	Closed Cycle Cooling Water (Ext)	Loss of material	Closed-Cycle Cooling Water System (B2.1.10)	VII.C2-10	3.3.1.50	B
Heat Exchanger (Liquid Sample)	SIA	Stainless Steel	Treated Borated Water (Int)	Loss of material	Water Chemistry (B2.1.2) and One-Time Inspection (B2.1.16)	VII.E1-17	3.3.1.91	E, 3
Heat Exchanger (NSSS Sample)	LBS, SIA	Stainless Steel	Closed Cycle Cooling Water (Int)	Loss of material	Closed-Cycle Cooling Water System (B2.1.10)	VII.C2-10	3.3.1.50	D
Heat Exchanger (NSSS Sample)	LBS, SIA	Stainless Steel	Plant Indoor Air (Ext)	None	None	VII.J-15	3.3.1.94	A
Heat Exchanger (Post LOCA Sample)	LBS, SIA	Stainless Steel	Closed Cycle Cooling Water (Ext)	Loss of material	Closed-Cycle Cooling Water System (B2.1.10)	VII.C2-10	3.3.1.50	D

Table 3.3.2-6 Auxiliary Systems – Summary of Aging Management Evaluation – Nuclear Steam Supply Sampling System (Continued)

Component Type	Intended Function	Material	Environment	Aging Effect Requiring Management	Aging Management Program	NUREG-1801 Vol. 2 Item	Table 1 Item	Notes
Heat Exchanger (Post LOCA Sample)	LBS, SIA	Stainless Steel	Closed Cycle Cooling Water (Int)	Loss of material	Closed-Cycle Cooling Water System (B2.1.10)	VII.C2-10	3.3.1.50	D
Heat Exchanger (Post LOCA Sample)	LBS, SIA	Stainless Steel	Plant Indoor Air (Ext)	None	None	VII.J-15	3.3.1.94	A
Heat Exchanger (Post LOCA Sample)	LBS, SIA	Stainless Steel	Treated Borated Water (Int)	Loss of material	Water Chemistry (B2.1.2) and One-Time Inspection (B2.1.16)	VII.E1-17	3.3.1.91	E, 3
Heat Exchanger (Steam Sample)	LBS, SIA	Carbon Steel	Closed Cycle Cooling Water (Int)	Loss of material	Closed-Cycle Cooling Water System (B2.1.10)	VII.C2-1	3.3.1.48	B
Heat Exchanger (Steam Sample)	LBS, SIA	Carbon Steel	Plant Indoor Air (Ext)	Loss of material	External Surfaces Monitoring Program (B2.1.20)	VII.I-8	3.3.1.58	B
Heat Exchanger (Steam Sample)	SIA	Stainless Steel	Closed Cycle Cooling Water (Ext)	Loss of material	Closed-Cycle Cooling Water System (B2.1.10)	VII.C2-10	3.3.1.50	D

Table 3.3.2-6 Auxiliary Systems – Summary of Aging Management Evaluation – Nuclear Steam Supply Sampling System (Continued)

Component Type	Intended Function	Material	Environment	Aging Effect Requiring Management	Aging Management Program	NUREG-1801 Vol. 2 Item	Table 1 Item	Notes
Heat Exchanger (Steam Sample)	SIA	Stainless Steel	Plant Indoor Air (Int)	Loss of material	Inspection of Internal Surfaces in Miscellaneous Piping and Ducting Components (B2.1.22)	V.A-26	3.2.1.08	E
Piping	LBS, PB, SIA	Stainless Steel	Borated Water Leakage (Ext)	None	None	VII.J-16	3.3.1.99	A
Piping	LBS	Stainless Steel	Closed Cycle Cooling Water (Int)	Loss of material	Closed-Cycle Cooling Water System (B2.1.10)	VII.C2-10	3.3.1.50	B
Piping	LBS	Stainless Steel	Demineralized Water (Int)	Loss of material	Water Chemistry (B2.1.2) and One-Time Inspection (B2.1.16)	VIII.D1-4	3.4.1.16	A
Piping	PB	Stainless Steel	Encased in Concrete (Ext)	None	None	VII.J-17	3.3.1.96	A
Piping	LBS, SIA	Stainless Steel	Plant Indoor Air (Ext)	None	None	VII.J-15	3.3.1.94	A
Piping	LBS, PB, SIA	Stainless Steel	Plant Indoor Air (Int)	Loss of material	Inspection of Internal Surfaces in Miscellaneous Piping and Ducting Components (B2.1.22)	V.A-26	3.2.1.08	E
Piping	LBS, PB, SIA	Stainless Steel	Treated Borated Water (Int)	Loss of material	Water Chemistry (B2.1.2) and One-Time Inspection (B2.1.16)	VII.E1-17	3.3.1.91	E, 3
Piping	LBS, PB, SIA	Stainless Steel	Treated Borated Water (Int)	Cracking	Water Chemistry (B2.1.2 and One-Time Inspection (B2.1.16)	VII.E1-20	3.3.1.90	E, 3

Table 3.3.2-6 Auxiliary Systems – Summary of Aging Management Evaluation – Nuclear Steam Supply Sampling System (Continued)

Component Type	Intended Function	Material	Environment	Aging Effect Requiring Management	Aging Management Program	NUREG-1801 Vol. 2 Item	Table 1 Item	Notes
Piping	LBS, SIA	Stainless Steel	Ventilation Atmosphere (Int)	None	None	VII.J-15	3.3.1.94	A, 2
Pump	LBS	Stainless Steel	Borated Water Leakage (Ext)	None	None	VII.J-16	3.3.1.99	A
Pump	LBS	Stainless Steel	Treated Borated Water (Int)	Loss of material	Water Chemistry (B2.1.2) and One-Time Inspection (B2.1.16)	VII.E1-17	3.3.1.91	E, 3
Sample Sink	LBS	Stainless Steel	Borated Water Leakage (Ext)	None	None	VII.J-16	3.3.1.99	A
Sample Sink	LBS	Stainless Steel	Treated Borated Water (Int)	Loss of material	Water Chemistry (B2.1.2) and One-Time Inspection (B2.1.16)	VII.E1-17	3.3.1.91	E, 3
Sample Sink	LBS	Stainless Steel	Treated Borated Water (Int)	Cracking	Water Chemistry (B2.1.2) and One-Time Inspection (B2.1.16)	VII.E1-20	3.3.1.90	E, 3
Switch	LBS	Stainless Steel	Closed Cycle Cooling Water (Int)	Loss of material	Closed-Cycle Cooling Water System (B2.1.10)	VII.C2-10	3.3.1.50	B
Switch	LBS	Stainless Steel	Plant Indoor Air (Ext)	None	None	VII.J-15	3.3.1.94	A
Tank	LBS	Stainless Steel	Borated Water Leakage (Ext)	None	None	VII.J-16	3.3.1.99	A
Tank	LBS	Stainless Steel	Treated Borated Water (Int)	Loss of material	Water Chemistry (B2.1.2) and One-Time Inspection (B2.1.16)	VII.E1-17	3.3.1.91	E, 3
Tubing	LBS	Stainless Steel	Closed Cycle Cooling Water (Int)	Loss of material	Closed-Cycle Cooling Water System (B2.1.10)	VII.C2-10	3.3.1.50	B

Table 3.3.2-6 Auxiliary Systems – Summary of Aging Management Evaluation – Nuclear Steam Supply Sampling System (Continued)

Component Type	Intended Function	Material	Environment	Aging Effect Requiring Management	Aging Management Program	NUREG-1801 Vol. 2 Item	Table 1 Item	Notes
Tubing	LBS	Stainless Steel	Demineralized Water (Int)	Loss of material	Water Chemistry (B2.1.2) and One-Time Inspection (B2.1.16)	VIII.D1-4	3.4.1.16	A
Tubing	LBS	Stainless Steel	Plant Indoor Air (Ext)	None	None	VII.J-15	3.3.1.94	A
Valve	PB	Carbon Steel	Closed Cycle Cooling Water (Int)	Loss of material	Closed-Cycle Cooling Water System (B2.1.10)	VII.C2-14	3.3.1.47	B
Valve	PB	Carbon Steel	Plant Indoor Air (Ext)	Loss of material	External Surfaces Monitoring Program (B2.1.20)	VII.I-8	3.3.1.58	B
Valve	LBS, PB, SIA	Stainless Steel	Borated Water Leakage (Ext)	None	None	VII.J-16	3.3.1.99	A
Valve	PB	Stainless Steel	Closed Cycle Cooling Water (Int)	Loss of material	Closed-Cycle Cooling Water System (B2.1.10)	VII.C2-10	3.3.1.50	B
Valve	LBS	Stainless Steel	Demineralized Water (Int)	Loss of material	Water Chemistry (B2.1.2) and One-Time Inspection (B2.1.16)	VIII.D1-4	3.4.1.16	A
Valve	LBS, PB, SIA	Stainless Steel	Plant Indoor Air (Ext)	None	None	VII.J-15	3.3.1.94	A
Valve	LBS, PB, SIA	Stainless Steel	Plant Indoor Air (Int)	Loss of material	Inspection of Internal Surfaces in Miscellaneous Piping and Ducting Components (B2.1.22)	V.A-26	3.2.1.08	E
Valve	LBS, PB, SIA	Stainless Steel	Treated Borated Water (Int)	Loss of material	Water Chemistry (B2.1.2) and One-Time Inspection (B2.1.16)	VII.E1-17	3.3.1.91	E, 3

Table 3.3.2-6 Auxiliary Systems – Summary of Aging Management Evaluation – Nuclear Steam Supply Sampling System (Continued)

Component Type	Intended Function	Material	Environment	Aging Effect Requiring Management	Aging Management Program	NUREG-1801 Vol. 2 Item	Table 1 Item	Notes
Valve	LBS, PB, SIA	Stainless Steel	Treated Borated Water (Int)	Cracking	Water Chemistry (B2.1.2) and One-Time Inspection (B2.1.16)	VII.E1-20	3.3.1.90	E, 3
Valve	SIA	Stainless Steel	Ventilation Atmosphere (Int)	None	None	VII.J-15	3.3.1.94	A, 2
Valve	LBS	Stainless Steel Cast Austenitic	Borated Water Leakage (Ext)	None	None	VII.J-16	3.3.1.99	A
Valve	LBS	Stainless Steel Cast Austenitic	Plant Indoor Air (Ext)	None	None	VII.J-15	3.3.1.94	A
Valve	LBS	Stainless Steel Cast Austenitic	Plant Indoor Air (Int)	Loss of material	Inspection of Internal Surfaces in Miscellaneous Piping and Ducting Components (B2.1.22)	V.A-26	3.2.1.08	E
Valve	LBS	Stainless Steel Cast Austenitic	Treated Borated Water (Int)	Loss of material	Water Chemistry (B2.1.2) and One-Time Inspection (B2.1.16)	VII.E1-17	3.3.1.91	E, 3
Valve	LBS	Stainless Steel Cast Austenitic	Treated Borated Water (Int)	Cracking	Water Chemistry (B2.1.2) and One-Time Inspection (B2.1.16)	VII.E1-20	3.3.1.90	E, 3

Notes for Table 3.3.2-6:

Standard Notes:

A Consistent with NUREG-1801 item for component, material, environment, and aging effect. AMP is consistent with NUREG-1801 AMP.

B Consistent with NUREG-1801 item for component, material, environment, and aging effect. AMP takes some exceptions to NUREG-1801 AMP.

C Component is different, but consistent with NUREG-1801 item for material, environment, and aging effect. AMP is consistent with NUREG-1801 AMP.

D Component is different, but consistent with NUREG-1801 item for material, environment, and aging effect. AMP takes some exceptions to NUREG-1801 AMP.

E Consistent with NUREG-1801 for material, environment, and aging effect, but a different aging management program is credited or NUREG-1801 identifies a plant-specific aging management program.

H Aging effect not in NUREG-1801 for this component, material and environment combination.

Plant Specific Notes:

1 The loss of preload aging effect is not identified in NUREG-1801 for this component, material, and environment combination. Loss of preload is managed by the Bolting Integrity program (B2.1.7).

2 Some stainless steel piping and piping components associated with the NSSS Sampling System have an internal environment of ventilation air. These components provide a flow path to sample the general air volume of containment post-LOCA. The NUREG-1801 line referenced for the aging evaluation is VII.J-15 which is for Air-Indoor Uncontrolled (External).

3 The Water Chemistry program (B2.1.2) and the One-Time Inspection program (B2.1.16) manages loss of material due to pitting and crevice corrosion and cracking due to stress corrosion cracking. The One-Time Inspection program (B2.1.16) includes selected components at susceptible locations.

Table 3.3.2-7 Auxiliary Systems – Summary of Aging Management Evaluation – Compressed Air System

Component Type	Intended Function	Material	Environment	Aging Effect Requiring Management	Aging Management Program	NUREG-1801 Vol. 2 Item	Table 1 Item	Notes
Closure Bolting	PB, SIA	Carbon Steel	Plant Indoor Air (Ext)	Loss of material	Bolting Integrity (B2.1.7)	VII.I-4	3.3.1.43	B
Closure Bolting	PB, SIA	Carbon Steel	Plant Indoor Air (Ext)	Loss of preload	Bolting Integrity (B2.1.7)	VII.I-5	3.3.1.45	B
Closure Bolting	PB, SIA	Copper Alloy	Plant Indoor Air (Ext)	Loss of preload	Bolting Integrity (B2.1.7)	None	None	H, 1
Closure Bolting	PB, SIA	Copper Alloy	Plant Indoor Air (Ext)	None	None	VIII.I-2	3.4.1.41	C
Closure Bolting	PB, SIA	Stainless Steel	Plant Indoor Air (Ext)	Loss of preload	Bolting Integrity (B2.1.7)	None	None	H, 1
Closure Bolting	PB, SIA	Stainless Steel	Plant Indoor Air (Ext)	None	None	VIII.I-10	3.4.1.41	C
Filter	FIL, PB	Stainless Steel	Plant Indoor Air (Ext)	None	None	VII.J-15	3.3.1.94	A
Filter	FIL, PB	Stainless Steel	Plant Indoor Air (Int)	Loss of material	Inspection of Internal Surfaces in Miscellaneous Piping and Ducting Components (B2.1.22)	VII.D-4	3.3.1.54	E, 3
Piping	LBS	Carbon Steel	Demineralized Water (Int)	Loss of material	Water Chemistry (B2.1.2) and One-Time Inspection (B2.1.16)	VIII.E-34	3.4.1.04	A
Piping	LBS, PB, SIA	Carbon Steel	Plant Indoor Air (Ext)	Loss of material	External Surfaces Monitoring Program (B2.1.20)	VII.D-3	3.3.1.57	B

Table 3.3.2-7 Auxiliary Systems – Summary of Aging Management Evaluation – Compressed Air System (Continued)

Component Type	Intended Function	Material	Environment	Aging Effect Requiring Management	Aging Management Program	NUREG-1801 Vol. 2 Item	Table 1 Item	Notes
Piping	PB, SIA	Carbon Steel	Plant Indoor Air (Int)	Loss of material	Inspection of Internal Surfaces in Miscellaneous Piping and Ducting Components (B2.1.22)	VII.D-2	3.3.1.53	E, 3
Piping	PB, SIA	Copper Alloy	Plant Indoor Air (Ext)	None	None	VIII.I-2	3.4.1.41	A
Piping	PB, SIA	Copper Alloy	Plant Indoor Air (Int)	Loss of material	Inspection of Internal Surfaces in Miscellaneous Piping and Ducting Components (B2.1.22)	VII.G-9	3.3.1.28	E
Piping	PB, SIA	Stainless Steel	Plant Indoor Air (Ext)	None	None	VII.J-15	3.3.1.94	A
Piping	PB, SIA	Stainless Steel	Plant Indoor Air (Int)	Loss of material	Inspection of Internal Surfaces in Miscellaneous Piping and Ducting Components (B2.1.22)	VII.D-4	3.3.1.54	E, 3
Regulators	PB	Aluminum	Plant Indoor Air (Ext)	None	None	V.F-2	3.2.1.50	A
Regulators	PB	Aluminum	Plant Indoor Air (Int)	None	None	V.F-2	3.2.1.50	A
Regulators	PB	Cast Iron	Plant Indoor Air (Ext)	Loss of material	External Surfaces Monitoring Program (B2.1.20)	VII.D-3	3.3.1.57	B

Table 3.3.2-7 Auxiliary Systems – Summary of Aging Management Evaluation – Compressed Air System (Continued)

Component Type	Intended Function	Material	Environment	Aging Effect Requiring Management	Aging Management Program	NUREG-1801 Vol. 2 Item	Table 1 Item	Notes
Regulators	PB	Cast Iron	Plant Indoor Air (Int)	Loss of material	Inspection of Internal Surfaces in Miscellaneous Piping and Ducting Components (B2.1.22)	VII.D-2	3.3.1.53	E, 3
Regulators	PB	Copper Alloy	Atmosphere/ Weather (Ext)	Loss of material	External Surfaces Monitoring Program (B2.1.20)	None	None	G
Regulators	PB	Copper Alloy	Plant Indoor Air (Ext)	None	None	VIII.I-2	3.4.1.41	A
Regulators	PB	Copper Alloy	Plant Indoor Air (Int)	Loss of material	Inspection of Internal Surfaces in Miscellaneous Piping and Ducting Components (B2.1.22)	VII.G-9	3.3.1.28	E
Regulators	PB	Copper Alloy (> 15% Zinc)	Atmosphere/ Weather (Ext)	Loss of material	External Surfaces Monitoring Program (B2.1.20)	None	None	G
Regulators	PB	Copper Alloy (> 15% Zinc)	Plant Indoor Air (Ext)	None	None	VIII.I-2	3.4.1.41	A
Regulators	PB	Copper Alloy (> 15% Zinc)	Plant Indoor Air (Int)	Loss of material	Selective Leaching of Materials (B2.1.17)	None	None	G, 2
Regulators	PB	Stainless Steel	Plant Indoor Air (Ext)	None	None	VII.J-15	3.3.1.94	A

Table 3.3.2-7 Auxiliary Systems – Summary of Aging Management Evaluation – Compressed Air System (Continued)

Component Type	Intended Function	Material	Environment	Aging Effect Requiring Management	Aging Management Program	NUREG-1801 Vol. 2 Item	Table 1 Item	Notes
Regulators	PB	Stainless Steel	Plant Indoor Air (Int)	Loss of material	Inspection of Internal Surfaces in Miscellaneous Piping and Ducting Components (B2.1.22)	VII.D-4	3.3.1.54	E, 3
Solenoid Valve	PB	Copper Alloy (> 15% Zinc)	Atmosphere/ Weather (Ext)	Loss of material	External Surfaces Monitoring Program (B2.1.20)	None	None	G
Solenoid Valve	PB	Copper Alloy (> 15% Zinc)	Plant Indoor Air (Ext)	None	None	VIII.I-2	3.4.1.41	A
Solenoid Valve	PB	Copper Alloy (> 15% Zinc)	Plant Indoor Air (Int)	Loss of material	Selective Leaching of Materials (B2.1.17)	None	None	G, 2
Solenoid Valve	PB	Stainless Steel	Atmosphere/ Weather (Ext)	Loss of material	External Surfaces Monitoring Program (B2.1.20)	None	None	G
Solenoid Valve	PB	Stainless Steel	Plant Indoor Air (Ext)	None	None	VII.J-15	3.3.1.94	A
Solenoid Valve	PB	Stainless Steel	Plant Indoor Air (Int)	Loss of material	Inspection of Internal Surfaces in Miscellaneous Piping and Ducting Components (B2.1.22)	VII.D-4	3.3.1.54	E, 3
Tank	PB	Carbon Steel	Atmosphere/ Weather (Ext)	Loss of material	External Surfaces Monitoring Program (B2.1.20)	VII.I-9	3.3.1.58	B
Tank	PB	Carbon Steel	Dry Gas (Int)	None	None	VII.J-22	3.3.1.98	C

Table 3.3.2-7 Auxiliary Systems – Summary of Aging Management Evaluation – Compressed Air System (Continued)

Component Type	Intended Function	Material	Environment	Aging Effect Requiring Management	Aging Management Program	NUREG-1801 Vol. 2 Item	Table 1 Item	Notes
Tank	PB	Carbon Steel	Plant Indoor Air (Ext)	Loss of material	External Surfaces Monitoring Program (B2.1.20)	VII.D-3	3.3.1.57	B
Tank	LBS	Stainless Steel	Demineralized Water (Int)	Loss of material	Water Chemistry (B2.1.2) and One-Time Inspection (B2.1.16)	VIII.E-29	3.4.1.16	A
Tank	LBS	Stainless Steel	Plant Indoor Air (Ext)	None	None	VII.J-15	3.3.1.94	A
Tubing	PB	Stainless Steel	Plant Indoor Air (Ext)	None	None	VII.J-15	3.3.1.94	A
Tubing	PB	Stainless Steel	Plant Indoor Air (Int)	Loss of material	Inspection of Internal Surfaces in Miscellaneous Piping and Ducting Components (B2.1.22)	VII.D-4	3.3.1.54	E, 3
Valve	LBS	Carbon Steel	Demineralized Water (Int)	Loss of material	Water Chemistry (B2.1.2) and One-Time Inspection (B2.1.16)	VIII.E-34	3.4.1.04	A
Valve	LBS, PB	Carbon Steel	Plant Indoor Air (Ext)	Loss of material	External Surfaces Monitoring Program (B2.1.20)	VII.D-3	3.3.1.57	B
Valve	PB	Carbon Steel	Plant Indoor Air (Int)	Loss of material	Inspection of Internal Surfaces in Miscellaneous Piping and Ducting Components (B2.1.22)	VII.D-2	3.3.1.53	E, 3

Table 3.3.2-7 Auxiliary Systems – Summary of Aging Management Evaluation – Compressed Air System (Continued)

Component Type	Intended Function	Material	Environment	Aging Effect Requiring Management	Aging Management Program	NUREG-1801 Vol. 2 Item	Table 1 Item	Notes
Valve	PB	Copper Alloy	Atmosphere/ Weather (Ext)	Loss of material	External Surfaces Monitoring Program (B2.1.20)	None	None	G
Valve	PB	Copper Alloy	Plant Indoor Air (Ext)	None	None	VIII.I-2	3.4.1.41	A
Valve	PB	Copper Alloy	Plant Indoor Air (Int)	Loss of material	Inspection of Internal Surfaces in Miscellaneous Piping and Ducting Components (B2.1.22)	VII.G-9	3.3.1.28	E
Valve	PB	Stainless Steel	Atmosphere/ Weather (Ext)	Loss of material	External Surfaces Monitoring Program (B2.1.20)	None	None	G
Valve	LBS	Stainless Steel	Demineralized Water (Int)	Loss of material	Water Chemistry (B2.1.2) and One-Time Inspection (B2.1.16)	VIII.E-29	3.4.1.16	A
Valve	LBS, PB	Stainless Steel	Plant Indoor Air (Ext)	None	None	VII.J-15	3.3.1.94	A
Valve	PB	Stainless Steel	Plant Indoor Air (Int)	Loss of material	Inspection of Internal Surfaces in Miscellaneous Piping and Ducting Components (B2.1.22)	VII.D-4	3.3.1.54	E, 3

Notes for Table 3.3.2-7:

Standard Notes:

A Consistent with NUREG-1801 item for component, material, environment, and aging effect. AMP is consistent with NUREG-1801 AMP.

B Consistent with NUREG-1801 item for component, material, environment, and aging effect. AMP takes some exceptions to NUREG-1801 AMP.

C Component is different, but consistent with NUREG-1801 item for material, environment, and aging effect. AMP is consistent with NUREG-1801 AMP.

E Consistent with NUREG-1801 for material, environment, and aging effect, but a different aging management program is credited or NUREG-1801 identifies a plant-specific aging management program.

G Environment not in NUREG-1801 for this component and material.

H Aging effect not in NUREG-1801 for this component, material and environment combination.

Plant Specific Notes:

1 The loss of preload aging effect is not identified in NUREG-1801 for this component, material, and environment combination. Loss of preload is managed by the Bolting Integrity program (B2.1.7).

2 Non-inhibited Copper Alloy >15 percent Zinc SSCs with surfaces exposed to Ventilation Atmosphere (Internal) or Plant Indoor Air (Internal) are subject to wetting due to condensation and thus are subject to loss of material due to selective leaching.

3 NUREG-1801, Section XI.M24, *Compressed Air Monitoring* applies to monitoring of the piping and components associated with the air compressors and dryers. Air compressor and dryer piping and components are not in scope for DCPP. In scope piping and components are associated with containment penetrations and air/nitrogen gas piping and components for backup operation of valves. Therefore NUREG-1801, Section XI.M24 is not considered applicable to DCPP and different aging management programs are specified for the in scope piping and components.

Table 3.3.2-8 Auxiliary Systems – Summary of Aging Management Evaluation – Chemical and Volume Control System

Component Type	Intended Function	Material	Environment	Aging Effect Requiring Management	Aging Management Program	NUREG-1801 Vol. 2 Item	Table 1 Item	Notes
Class 1 Piping <= 4in	PB	Stainless Steel	Borated Water Leakage (Ext)	None	None	VII.J-16	3.3.1.99	A
Class 1 Piping <= 4in	PB	Stainless Steel	Reactor Coolant (Int)	Cracking	ASME Section XI Inservice Inspection, Subsections IWB, IWC, and IWD for Class 1 components (B2.1.1) and Water Chemistry (B2.1.2) and One-Time Inspection of ASME Code Class 1 Small-Bore Piping (B2.1.19)	IV.C2-1	3.1.1.70	B
Class 1 Piping <= 4in	PB	Stainless Steel	Reactor Coolant (Int)	Loss of material	Water Chemistry (B2.1.2) and One-Time Inspection (B2.1.16)	IV.C2-15	3.1.1.83	E, 5
Closure Bolting	LBS	Carbon Steel	Borated Water Leakage (Ext)	Loss of preload	Bolting Integrity (B2.1.7)	IV.C2-8	3.1.1.52	B
Closure Bolting	LBS	Carbon Steel	Borated Water Leakage (Ext)	Loss of material	Boric Acid Corrosion (B2.1.4)	VII.I-2	3.3.1.89	A
Closure Bolting	LBS, PB	Carbon Steel	Plant Indoor Air (Ext)	Loss of material	Bolting Integrity (B2.1.7)	VII.I-4	3.3.1.43	B
Closure Bolting	LBS, PB	Carbon Steel	Plant Indoor Air (Ext)	Loss of preload	Bolting Integrity (B2.1.7)	VII.I-5	3.3.1.45	B
Closure Bolting	PB	Stainless Steel	Borated Water Leakage (Ext)	Loss of preload	Bolting Integrity (B2.1.7)	IV.C2-8	3.1.1.52	B
Closure Bolting	LBS, PB	Stainless Steel	Plant Indoor Air (Ext)	Loss of preload	Bolting Integrity (B2.1.7)	None	None	H, 1
Closure Bolting	LBS, PB	Stainless Steel	Plant Indoor Air (Ext)	None	None	VII.J-15	3.3.1.94	C
Demineralizer	LBS, PB	Stainless Steel	Borated Water Leakage (Ext)	None	None	VII.J-16	3.3.1.99	A

Table 3.3.2-8 Auxiliary Systems – Summary of Aging Management Evaluation – Chemical and Volume Control System (Continued)

Component Type	Intended Function	Material	Environment	Aging Effect Requiring Management	Aging Management Program	NUREG-1801 Vol. 2 Item	Table 1 Item	Notes
Demineralizer	LBS	Stainless Steel	Demineralized Water (Int)	Loss of material	Water Chemistry (B2.1.2) and One-Time Inspection (B2.1.16)	VIII.E-29	3.4.1.16	A
Demineralizer	LBS	Stainless Steel	Plant Indoor Air (Ext)	None	None	VII.J-15	3.3.1.94	A
Demineralizer	LBS, PB	Stainless Steel	Treated Borated Water (Int)	Loss of material	Water Chemistry (B2.1.2) and One-Time Inspection (B2.1.16)	VII.E1-17	3.3.1.91	E, 5
Evaporator	LBS	Stainless Steel	Borated Water Leakage (Ext)	None	None	VII.J-16	3.3.1.99	C
Evaporator	LBS	Stainless Steel	Treated Borated Water (Int)	Loss of material	Water Chemistry (B2.1.2) and One-Time Inspection (B2.1.16)	VII.E1-17	3.3.1.91	E, 5
Evaporator	LBS	Stainless Steel	Treated Borated Water (Int)	Cracking	Water Chemistry (B2.1.2) and One-Time Inspection (B2.1.16)	VII.E1-20	3.3.1.90	E, 5
Filter	PB	Aluminum	Lubricating Oil (Int)	Loss of material	Lubricating Oil Analysis (B2.1.23) and One-Time Inspection (B2.1.16)	None	None	G
Filter	PB	Aluminum	Plant Indoor Air (Ext)	None	None	VII.J-1	3.3.1.95	A
Filter	LBS, PB	Stainless Steel	Borated Water Leakage (Ext)	None	None	VII.J-16	3.3.1.99	A
Filter	LBS, PB	Stainless Steel	Treated Borated Water (Int)	Loss of material	Water Chemistry (B2.1.2) and One-Time Inspection (B2.1.16)	VII.E1-17	3.3.1.91	E, 5
Flexible Hoses	LBS	Stainless Steel	Borated Water Leakage (Ext)	None	None	VII.J-16	3.3.1.99	A
Flexible Hoses	PB	Stainless Steel	Lubricating Oil (Int)	Loss of material	Lubricating Oil Analysis (B2.1.23) and One-Time Inspection (B2.1.16)	VII.E1-15	3.3.1.33	B

Table 3.3.2-8 Auxiliary Systems – Summary of Aging Management Evaluation – Chemical and Volume Control System (Continued)

Component Type	Intended Function	Material	Environment	Aging Effect Requiring Management	Aging Management Program	NUREG-1801 Vol. 2 Item	Table 1 Item	Notes
Flexible Hoses	PB	Stainless Steel	Plant Indoor Air (Ext)	None	None	VII.J-15	3.3.1.94	A
Flexible Hoses	LBS	Stainless Steel	Treated Borated Water (Int)	Loss of material	Water Chemistry (B2.1.2) and One-Time Inspection (B2.1.16)	VII.E1-17	3.3.1.91	E, 5
Flow Element	LBS, PB, SIA	Stainless Steel	Borated Water Leakage (Ext)	None	None	VII.J-16	3.3.1.99	A
Flow Element	LBS, SIA	Stainless Steel	Demineralized Water (Int)	Loss of material	Water Chemistry (B2.1.2) and One-Time Inspection (B2.1.16)	VIII.E-29	3.4.1.16	A
Flow Element	LBS, SIA	Stainless Steel	Plant Indoor Air (Ext)	None	None	VII.J-15	3.3.1.94	A
Flow Element	LBS, PB, SIA	Stainless Steel	Treated Borated Water (Int)	Loss of material	Water Chemistry (B2.1.2) and One-Time Inspection (B2.1.16)	VII.E1-17	3.3.1.91	E, 5
Flow Element	LBS, PB, SIA	Stainless Steel	Treated Borated Water (Int)	Cracking	Water Chemistry (B2.1.2) and One-Time Inspection (B2.1.16)	VII.E1-20	3.3.1.90	E, 5
Flow Indicator	SIA	Stainless Steel	Dry Gas (Int)	None	None	VII.J-19	3.3.1.97	A
Flow Indicator	SIA	Stainless Steel	Plant Indoor Air (Ext)	None	None	VII.J-15	3.3.1.94	A
Gear Box	PB	Carbon Steel	Lubricating Oil (Int)	Loss of material	Lubricating Oil Analysis (B2.1.23) and One-Time Inspection (B2.1.16)	VII.E1-19	3.3.1.14	D
Gear Box	PB	Carbon Steel	Plant Indoor Air (Ext)	Loss of material	External Surfaces Monitoring Program (B2.1.20)	VII.I-8	3.3.1.58	B

Table 3.3.2-8 Auxiliary Systems – Summary of Aging Management Evaluation – Chemical and Volume Control System (Continued)

Component Type	Intended Function	Material	Environment	Aging Effect Requiring Management	Aging Management Program	NUREG-1801 Vol. 2 Item	Table 1 Item	Notes
Heat Exchanger (Boric Acid Evaporator/ Condenser)	LBS, SIA, SS	Carbon Steel	Closed Cycle Cooling Water (Int)	Loss of material	Closed-Cycle Cooling Water System (B2.1.10)	VII.E1-6	3.3.1.48	B
Heat Exchanger (Boric Acid Evaporator/ Condenser)	LBS, SIA, SS	Carbon Steel	Plant Indoor Air (Ext)	Loss of material	External Surfaces Monitoring Program (B2.1.20)	VII.I-8	3.3.1.58	B
Heat Exchanger (Boric Acid Evaporator/ Condenser)	LBS, SS	Carbon Steel	Steam (Int)	Loss of material	Water Chemistry (B2.1.2) and One-Time Inspection (B2.1.16)	VIII.B1-8	3.4.1.37	E, 5
Heat Exchanger (Boric Acid Evaporator/ Condenser)	LBS, SS	Stainless Steel	Closed Cycle Cooling Water (Int)	Loss of material	Closed-Cycle Cooling Water System (B2.1.10)	VII.C2-10	3.3.1.50	D
Heat Exchanger (Boric Acid Evaporator/ Condenser)	LBS, SS	Stainless Steel	Secondary Water (Ext)	Loss of material	Water Chemistry (B2.1.2) and One-Time Inspection (B2.1.16)	VIII.E-29	3.4.1.16	C

Table 3.3.2-8 Auxiliary Systems – Summary of Aging Management Evaluation – Chemical and Volume Control System (Continued)

Component Type	Intended Function	Material	Environment	Aging Effect Requiring Management	Aging Management Program	NUREG-1801 Vol. 2 Item	Table 1 Item	Notes
Heat Exchanger (Boric Acid Evaporator/ Condenser)	LBS, SS	Stainless Steel	Secondary Water (Ext)	Cracking	Water Chemistry (B2.1.2) and One-Time Inspection (B2.1.16)	VIII.E-30	3.4.1.14	C
Heat Exchanger (Boric Acid Batching)	LBS	Carbon Steel	Plant Indoor Air (Ext)	Loss of material	External Surfaces Monitoring Program (B2.1.20)	VII.I-8	3.3.1.58	B
Heat Exchanger (Boric Acid Batching)	LBS	Carbon Steel	Steam (Int)	Loss of material	Water Chemistry (B2.1.2) and One-Time Inspection (B2.1.16)	VIII.B1-8	3.4.1.37	E, 5
Heat Exchanger (Boric Acid Batching)	LBS	Stainless Steel	Borated Water Leakage (Ext)	None	None	VII.J-16	3.3.1.99	C
Heat Exchanger (Boric Acid Batching)	LBS	Stainless Steel	Treated Borated Water (Int)	Loss of material	Water Chemistry (B2.1.2) and One-Time Inspection (B2.1.16)	VII.E1-17	3.3.1.91	E, 5
Heat Exchanger (Boric Acid Distillate)	LBS, SS	Stainless Steel	Closed Cycle Cooling Water (Ext)	Loss of material	Closed-Cycle Cooling Water System (B2.1.10)	VII.C2-10	3.3.1.50	D

Table 3.3.2-8 Auxiliary Systems – Summary of Aging Management Evaluation – Chemical and Volume Control System (Continued)

Component Type	Intended Function	Material	Environment	Aging Effect Requiring Management	Aging Management Program	NUREG-1801 Vol. 2 Item	Table 1 Item	Notes
Heat Exchanger (Boric Acid Distillate)	LBS, SIA, SS	Stainless Steel	Closed Cycle Cooling Water (Int)	Loss of material	Closed-Cycle Cooling Water System (B2.1.10)	VII.C2-10	3.3.1.50	D
Heat Exchanger (Boric Acid Distillate)	LBS, SS	Stainless Steel	Demineralized Water (Int)	Loss of material	Water Chemistry (B2.1.2) and One-Time Inspection (B2.1.16)	VIII.E-29	3.4.1.16	C
Heat Exchanger (Boric Acid Distillate)	LBS, SIA, SS	Stainless Steel	Plant Indoor Air (Ext)	None	None	VII.J-15	3.3.1.94	C
Heat Exchanger (Boric Acid Evaporator)	LBS, SIA	Stainless Steel	Borated Water Leakage (Ext)	None	None	VII.J-16	3.3.1.99	C
Heat Exchanger (Boric Acid Evaporator)	LBS	Stainless Steel	Steam (Int)	Cracking	Water Chemistry (B2.1.2) and One-Time Inspection (B2.1.16)	VIII.B1-2	3.4.1.39	E, 5
Heat Exchanger (Boric Acid Evaporator)	LBS	Stainless Steel	Steam (Int)	Loss of material	Water Chemistry (B2.1.2) and One-Time Inspection (B2.1.16)	VIII.B1-3	3.4.1.37	E, 5

Table 3.3.2-8 Auxiliary Systems – Summary of Aging Management Evaluation – Chemical and Volume Control System (Continued)

Component Type	Intended Function	Material	Environment	Aging Effect Requiring Management	Aging Management Program	NUREG-1801 Vol. 2 Item	Table 1 Item	Notes
Heat Exchanger (Boric Acid Evaporator)	LBS	Stainless Steel	Treated Borated Water (Ext)	Cracking	Water Chemistry (B2.1.2) and One-Time Inspection (B2.1.16)	VII.E1-5	3.3.1.08	E, 5
Heat Exchanger (Boric Acid Evaporator)	LBS	Stainless Steel	Treated Borated Water (Ext)	Loss of material	Water Chemistry (B2.1.2) and One-Time Inspection (B2.1.16)	VII.E1-17	3.3.1.91	E, 5
Heat Exchanger (Boric Acid Evaporator)	LBS, SIA	Stainless Steel	Treated Borated Water (Int)	Cracking	Water Chemistry (B2.1.2) and One-Time Inspection (B2.1.16)	VII.E1-5	3.3.1.08	E
Heat Exchanger (Boric Acid Evaporator)	LBS, SIA	Stainless Steel	Treated Borated Water (Int)	Loss of material	Water Chemistry (B2.1.2) and One-Time Inspection (B2.1.16)	VII.E1-17	3.3.1.91	E, 5
Heat Exchanger (Boric Acid Feed)	LBS	Stainless Steel	Borated Water Leakage (Ext)	None	None	VII.J-16	3.3.1.99	C
Heat Exchanger (Boric Acid Feed)	LBS	Stainless Steel	Plant Indoor Air (Ext)	None	None	VII.J-15	3.3.1.94	C

Table 3.3.2-8 Auxiliary Systems – Summary of Aging Management Evaluation – Chemical and Volume Control System (Continued)

Component Type	Intended Function	Material	Environment	Aging Effect Requiring Management	Aging Management Program	NUREG-1801 Vol. 2 Item	Table 1 Item	Notes
Heat Exchanger (Boric Acid Feed)	LBS	Stainless Steel	Secondary Water (Ext)	Loss of material	Water Chemistry (B2.1.2) and One-Time Inspection (B2.1.16)	VIII.E-29	3.4.1.16	C
Heat Exchanger (Boric Acid Feed)	LBS	Stainless Steel	Secondary Water (Ext)	Cracking	Water Chemistry (B2.1.2) and One-Time Inspection (B2.1.16)	VIII.E-30	3.4.1.14	C
Heat Exchanger (Boric Acid Feed)	LBS	Stainless Steel	Steam (Int)	Cracking	Water Chemistry (B2.1.2) and One-Time Inspection (B2.1.16)	VIII.B1-2	3.4.1.39	E, 5
Heat Exchanger (Boric Acid Feed)	LBS	Stainless Steel	Steam (Int)	Loss of material	Water Chemistry (B2.1.2) and One-Time Inspection (B2.1.16)	VIII.B1-3	3.4.1.37	E, 5
Heat Exchanger (Boric Acid Feed)	LBS	Stainless Steel	Treated Borated Water (Int)	Cracking	Water Chemistry (B2.1.2) and One-Time Inspection (B2.1.16)	VII.E1-5	3.3.1.08	E
Heat Exchanger (Boric Acid Feed)	LBS	Stainless Steel	Treated Borated Water (Int)	Loss of material	Water Chemistry (B2.1.2) and One-Time Inspection (B2.1.16)	VII.E1-17	3.3.1.91	E, 5

Table 3.3.2-8 Auxiliary Systems – Summary of Aging Management Evaluation – Chemical and Volume Control System (Continued)

Component Type	Intended Function	Material	Environment	Aging Effect Requiring Management	Aging Management Program	NUREG-1801 Vol. 2 Item	Table 1 Item	Notes
Heat Exchanger (Boric Acid Vent)	LBS, SIA, SS	Carbon Steel	Closed Cycle Cooling Water (Int)	Loss of material	Closed-Cycle Cooling Water System (B2.1.10)	VII.E1-6	3.3.1.48	B
Heat Exchanger (Boric Acid Vent)	LBS, SS	Carbon Steel	Demineralized Water (Int)	Loss of material	Water Chemistry (B2.1.2) and One-Time Inspection (B2.1.16)	VIII.E-37	3.4.1.03	A
Heat Exchanger (Boric Acid Vent)	LBS, SIA, SS	Carbon Steel	Plant Indoor Air (Ext)	Loss of material	External Surfaces Monitoring Program (B2.1.20)	VII.I-8	3.3.1.58	B
Heat Exchanger (Boric Acid Vent)	LBS, SS	Stainless Steel	Closed Cycle Cooling Water (Int)	Loss of material	Closed-Cycle Cooling Water System (B2.1.10)	VII.C2-10	3.3.1.50	D
Heat Exchanger (Boric Acid Vent)	LBS, SS	Stainless Steel	Secondary Water (Ext)	Loss of material	Water Chemistry (B2.1.2) and One-Time Inspection (B2.1.16)	VIII.E-29	3.4.1.16	C
Heat Exchanger (Boric Acid Vent)	LBS, SS	Stainless Steel	Secondary Water (Ext)	Cracking	Water Chemistry (B2.1.2) and One-Time Inspection (B2.1.16)	VIII.E-30	3.4.1.14	C

Table 3.3.2-8 Auxiliary Systems – Summary of Aging Management Evaluation – Chemical and Volume Control System (Continued)

Component Type	Intended Function	Material	Environment	Aging Effect Requiring Management	Aging Management Program	NUREG-1801 Vol. 2 Item	Table 1 Item	Notes
Heat Exchanger (Centrifugal Charging)	PB	Carbon Steel (Galvanized)	Lubricating Oil (Int)	Loss of material	Lubricating Oil Analysis (B2.1.23) and One-Time Inspection (B2.1.16)	VII.E1-19	3.3.1.14	D
Heat Exchanger (Centrifugal Charging)	PB	Carbon Steel (Galvanized)	Plant Indoor Air (Ext)	Loss of material	External Surfaces Monitoring Program (B2.1.20)	VII.I-8	3.3.1.58	B
Heat Exchanger (Centrifugal Charging)	HT, PB	Copper Alloy	Closed Cycle Cooling Water (Int)	Reduction of heat transfer	Closed-Cycle Cooling Water System (B2.1.10)	VII.C2-2	3.3.1.52	B
Heat Exchanger (Centrifugal Charging)	HT, PB	Copper Alloy	Closed Cycle Cooling Water (Int)	Loss of material	Closed-Cycle Cooling Water System (B2.1.10)	VII.E1-2	3.3.1.51	B
Heat Exchanger (Centrifugal Charging)	HT, PB	Copper Alloy	Lubricating Oil (Ext)	Reduction of heat transfer	Lubricating Oil Analysis (B2.1.23) and One-Time Inspection (B2.1.16)	V.A-12	3.2.1.09	B
Heat Exchanger (Centrifugal Charging)	HT, PB	Copper Alloy	Lubricating Oil (Ext)	Loss of material	Lubricating Oil Analysis (B2.1.23) and One-Time Inspection (B2.1.16)	VII.E1-12	3.3.1.26	D

Table 3.3.2-8 Auxiliary Systems – Summary of Aging Management Evaluation – Chemical and Volume Control System (Continued)

Component Type	Intended Function	Material	Environment	Aging Effect Requiring Management	Aging Management Program	NUREG-1801 Vol. 2 Item	Table 1 Item	Notes
Heat Exchanger (Centrifugal Charging)	HT, PB	Copper Alloy (> 15% Zinc)	Closed Cycle Cooling Water (Int)	Reduction of heat transfer	Closed-Cycle Cooling Water System (B2.1.10)	VII.C2-2	3.3.1.52	B
Heat Exchanger (Centrifugal Charging)	HT, PB	Copper Alloy (> 15% Zinc)	Closed Cycle Cooling Water (Int)	Loss of material	Closed-Cycle Cooling Water System (B2.1.10)	VII.E1-2	3.3.1.51	D
Heat Exchanger (Centrifugal Charging)	HT, PB	Copper Alloy (> 15% Zinc)	Closed Cycle Cooling Water (Int)	Loss of material	Selective Leaching of Materials (B2.1.17)	VII.E1-13	3.3.1.84	C
Heat Exchanger (Centrifugal Charging)	HT, PB	Copper Alloy (> 15% Zinc)	Lubricating Oil (Ext)	Reduction of heat transfer	Lubricating Oil Analysis (B2.1.23) and One-Time Inspection (B2.1.16)	V.A-12	3.2.1.09	B
Heat Exchanger (Centrifugal Charging)	HT, PB	Copper Alloy (> 15% Zinc)	Lubricating Oil (Ext)	Loss of material	Lubricating Oil Analysis (B2.1.23) and One-Time Inspection (B2.1.16)	VII.E1-12	3.3.1.26	D
Heat Exchanger (Centrifugal Charging)	PB	Copper Alloy (> 15% Zinc)	Lubricating Oil (Int)	Loss of material	Lubricating Oil Analysis (B2.1.23) and One-Time Inspection (B2.1.16)	VII.E1-12	3.3.1.26	D

Table 3.3.2-8 Auxiliary Systems – Summary of Aging Management Evaluation – Chemical and Volume Control System (Continued)

Component Type	Intended Function	Material	Environment	Aging Effect Requiring Management	Aging Management Program	NUREG-1801 Vol. 2 Item	Table 1 Item	Notes
Heat Exchanger (Centrifugal Charging)	PB	Copper Alloy (> 15% Zinc)	Plant Indoor Air (Ext)	None	None	VIII.I-2	3.4.1.41	C
Heat Exchanger (Excess Letdown)	PB	Carbon Steel	Closed Cycle Cooling Water (Int)	Loss of material	Closed-Cycle Cooling Water System (B2.1.10)	VII.E1-6	3.3.1.48	B
Heat Exchanger (Excess Letdown)	PB	Carbon Steel	Plant Indoor Air (Ext)	Loss of material	External Surfaces Monitoring Program (B2.1.20)	VII.I-8	3.3.1.58	B
Heat Exchanger (Excess Letdown)	PB	Stainless Steel	Borated Water Leakage (Ext)	None	None	VII.J-16	3.3.1.99	C
Heat Exchanger (Excess Letdown)	PB	Stainless Steel	Closed Cycle Cooling Water (Ext)	Loss of material	Closed-Cycle Cooling Water System (B2.1.10)	VII.C2-10	3.3.1.50	D
Heat Exchanger (Excess Letdown)	PB	Stainless Steel	Closed Cycle Cooling Water (Ext)	Cracking	Closed-Cycle Cooling Water System (B2.1.10)	VII.C2-11	3.3.1.46	D

Table 3.3.2-8 Auxiliary Systems – Summary of Aging Management Evaluation – Chemical and Volume Control System (Continued)

Component Type	Intended Function	Material	Environment	Aging Effect Requiring Management	Aging Management Program	NUREG-1801 Vol. 2 Item	Table 1 Item	Notes
Heat Exchanger (Excess Letdown)	PB	Stainless Steel	Treated Borated Water (Int)	Cracking	Water Chemistry (B2.1.2) and One-Time Inspection (B2.1.16)	VII.E1-5	3.3.1.08	E
Heat Exchanger (Excess Letdown)	PB	Stainless Steel	Treated Borated Water (Int)	Loss of material	Water Chemistry (B2.1.2) and One-Time Inspection (B2.1.16)	VII.E1-17	3.3.1.91	E, 5
Heat Exchanger (Letdown)	PB	Carbon Steel	Closed Cycle Cooling Water (Int)	Loss of material	Closed-Cycle Cooling Water System (B2.1.10)	VII.E1-6	3.3.1.48	B
Heat Exchanger (Letdown)	PB	Carbon Steel	Plant Indoor Air (Ext)	Loss of material	External Surfaces Monitoring Program (B2.1.20)	VII.I-8	3.3.1.58	B
Heat Exchanger (Letdown)	PB	Stainless Steel	Closed Cycle Cooling Water (Ext)	Loss of material	Closed-Cycle Cooling Water System (B2.1.10)	VII.C2-10	3.3.1.50	D
Heat Exchanger (Letdown)	PB	Stainless Steel	Closed Cycle Cooling Water (Ext)	Cracking	Closed-Cycle Cooling Water System (B2.1.10)	VII.C2-11	3.3.1.46	D
Heat Exchanger (Letdown)	PB	Stainless Steel	Treated Borated Water (Int)	Cracking	Water Chemistry (B2.1.2) and One-Time Inspection (B2.1.16)	VII.E1-9	3.3.1.07	E
Heat Exchanger (Letdown)	PB	Stainless Steel	Treated Borated Water (Int)	Loss of material	Water Chemistry (B2.1.2) and One-Time Inspection (B2.1.16)	VII.E1-17	3.3.1.91	E, 5

Table 3.3.2-8 Auxiliary Systems – Summary of Aging Management Evaluation – Chemical and Volume Control System (Continued)

Component Type	Intended Function	Material	Environment	Aging Effect Requiring Management	Aging Management Program	NUREG-1801 Vol. 2 Item	Table 1 Item	Notes
Heat Exchanger (Regenerative Letdown)	PB	Stainless Steel	Borated Water Leakage (Ext)	None	None	VII.J-16	3.3.1.99	C
Heat Exchanger (Regenerative Letdown)	PB	Stainless Steel	Treated Borated Water (Ext)	Cracking	Water Chemistry (B2.1.2) and One-Time Inspection (B2.1.16)	VII.E1-5	3.3.1.08	E, 5
Heat Exchanger (Regenerative Letdown)	PB	Stainless Steel	Treated Borated Water (Ext)	Loss of material	Water Chemistry (B2.1.2) and One-Time Inspection (B2.1.16)	VII.E1-17	3.3.1.91	E, 5
Heat Exchanger (Regenerative Letdown)	PB	Stainless Steel	Treated Borated Water (Int)	Cracking	Water Chemistry (B2.1.2) and One-Time Inspection (B2.1.16)	VII.E1-5	3.3.1.08	E
Heat Exchanger (Regenerative Letdown)	PB	Stainless Steel	Treated Borated Water (Int)	Loss of material	Water Chemistry (B2.1.2) and One-Time Inspection (B2.1.16)	VII.E1-17	3.3.1.91	E, 5
Heat Exchanger (Sample Cooler)	LBS, SIA	Carbon Steel	Closed Cycle Cooling Water (Int)	Loss of material	Closed-Cycle Cooling Water System (B2.1.10)	VII.E1-6	3.3.1.48	B

Table 3.3.2-8 Auxiliary Systems – Summary of Aging Management Evaluation – Chemical and Volume Control System (Continued)

Component Type	Intended Function	Material	Environment	Aging Effect Requiring Management	Aging Management Program	NUREG-1801 Vol. 2 Item	Table 1 Item	Notes
Heat Exchanger (Sample Cooler)	LBS, SIA	Carbon Steel	Plant Indoor Air (Ext)	Loss of material	External Surfaces Monitoring Program (B2.1.20)	VII.I-8	3.3.1.58	B
Heat Exchanger (Sample Cooler)	LBS, SS	Copper Alloy	Closed Cycle Cooling Water (Int)	Loss of material	Closed-Cycle Cooling Water System (B2.1.10)	VII.E1-2	3.3.1.51	B
Heat Exchanger (Sample Cooler)	LBS, SS	Copper Alloy	Plant Indoor Air (Ext)	None	None	VIII.I-2	3.4.1.41	A
Heat Exchanger (Sample Cooler)	LBS	Nickel Alloys	Closed Cycle Cooling Water (Ext)	Loss of material	Closed-Cycle Cooling Water System (B2.1.10)	None	None	G
Heat Exchanger (Sample Cooler)	LBS	Nickel Alloys	Treated Borated Water (Int)	Loss of material	Water Chemistry (B2.1.2) and One-Time Inspection (B2.1.16)	None	None	G, 3
Heat Exchanger (Sample Cooler)	LBS	Stainless Steel	Borated Water Leakage (Ext)	None	None	VII.J-16	3.3.1.99	C

Table 3.3.2-8 Auxiliary Systems – Summary of Aging Management Evaluation – Chemical and Volume Control System (Continued)

Component Type	Intended Function	Material	Environment	Aging Effect Requiring Management	Aging Management Program	NUREG-1801 Vol. 2 Item	Table 1 Item	Notes
Heat Exchanger (Sample Cooler)	LBS	Stainless Steel	Treated Borated Water (Int)	Cracking	Water Chemistry (B2.1.2) and One-Time Inspection (B2.1.16)	VII.E1-5	3.3.1.08	E
Heat Exchanger (Sample Cooler)	LBS	Stainless Steel	Treated Borated Water (Int)	Loss of material	Water Chemistry (B2.1.2) and One-Time Inspection (B2.1.16)	VII.E1-17	3.3.1.91	E, 5
Heat Exchanger (Seal Water)	PB	Carbon Steel	Closed Cycle Cooling Water (Int)	Loss of material	Closed-Cycle Cooling Water System (B2.1.10)	VII.E1-6	3.3.1.48	B
Heat Exchanger (Seal Water)	PB	Carbon Steel	Plant Indoor Air (Ext)	Loss of material	External Surfaces Monitoring Program (B2.1.20)	VII.I-8	3.3.1.58	B
Heat Exchanger (Seal Water)	HT, PB	Stainless Steel	Closed Cycle Cooling Water (Ext)	Reduction of heat transfer	Closed-Cycle Cooling Water System (B2.1.10)	VII.C2-3	3.3.1.52	B
Heat Exchanger (Seal Water)	HT, PB	Stainless Steel	Closed Cycle Cooling Water (Ext)	Loss of material	Closed-Cycle Cooling Water System (B2.1.10)	VII.C2-10	3.3.1.50	D
Heat Exchanger (Seal Water)	HT, PB	Stainless Steel	Treated Borated Water (Int)	Reduction of heat transfer	Water Chemistry (B2.1.2) and One-Time Inspection (B2.1.16)	None	None	H, 6
Heat Exchanger (Seal Water)	HT, PB	Stainless Steel	Treated Borated Water (Int)	Cracking	Water Chemistry (B2.1.2) and One-Time Inspection (B2.1.16)	VII.E1-5	3.3.1.08	E

Table 3.3.2-8 Auxiliary Systems – Summary of Aging Management Evaluation – Chemical and Volume Control System (Continued)

Component Type	Intended Function	Material	Environment	Aging Effect Requiring Management	Aging Management Program	NUREG-1801 Vol. 2 Item	Table 1 Item	Notes
Heat Exchanger (Seal Water)	HT, PB	Stainless Steel	Treated Borated Water (Int)	Loss of material	Water Chemistry (B2.1.2) and One-Time Inspection (B2.1.16)	VII.E1-17	3.3.1.91	E, 5
Heater	LBS, PB	Carbon Steel	Borated Water Leakage (Ext)	Loss of material	Boric Acid Corrosion (B2.1.4)	VII.I-10	3.3.1.89	A
Heater	LBS, PB	Carbon Steel	Treated Borated Water (Int)	Loss of material	Inspection of Internal Surfaces in Miscellaneous Piping and Ducting Components (B2.1.22)	None	None	G, 7
Heater	LBS, PB	Stainless Steel	Borated Water Leakage (Ext)	None	None	VII.J-16	3.3.1.99	A
Heater	LBS, PB	Stainless Steel	Treated Borated Water (Int)	Loss of material	Water Chemistry (B2.1.2) and One-Time Inspection (B2.1.16)	VII.E1-17	3.3.1.91	E, 5
Indicator	PB	Stainless Steel	Borated Water Leakage (Ext)	None	None	VII.J-16	3.3.1.99	A
Indicator	PB	Stainless Steel	Treated Borated Water (Int)	Loss of material	Water Chemistry (B2.1.2) and One-Time Inspection (B2.1.16)	VII.E1-17	3.3.1.91	E, 5
Indicator	PB	Stainless Steel	Treated Borated Water (Int)	Cracking	Water Chemistry (B2.1.2) and One-Time Inspection (B2.1.16)	VII.E1-20	3.3.1.90	E, 5
Orifice	LBS, PB, SIA, TH	Stainless Steel	Borated Water Leakage (Ext)	None	None	VII.J-16	3.3.1.99	A
Orifice	LBS, SIA	Stainless Steel	Demineralized Water (Int)	Loss of material	Water Chemistry (B2.1.2) and One-Time Inspection (B2.1.16)	VIII.E-29	3.4.1.16	A
Orifice	LBS, SIA	Stainless Steel	Plant Indoor Air (Ext)	None	None	VII.J-15	3.3.1.94	A
Orifice	LBS, PB, SIA, TH	Stainless Steel	Treated Borated Water (Int)	Loss of material	Water Chemistry (B2.1.2) and One-Time Inspection (B2.1.16)	VII.E1-17	3.3.1.91	E, 5

Table 3.3.2-8 Auxiliary Systems – Summary of Aging Management Evaluation – Chemical and Volume Control System (Continued)

Component Type	Intended Function	Material	Environment	Aging Effect Requiring Management	Aging Management Program	NUREG-1801 Vol. 2 Item	Table 1 Item	Notes
Piping	SIA	Carbon Steel	Dry Gas (Int)	None	None	VII.J-23	3.3.1.97	A
Piping	PB	Carbon Steel	Lubricating Oil (Int)	Loss of material	Lubricating Oil Analysis (B2.1.23) and One-Time Inspection (B2.1.16)	VII.E1-19	3.3.1.14	B
Piping	LBS, PB, SIA	Carbon Steel	Plant Indoor Air (Ext)	Loss of material	External Surfaces Monitoring Program (B2.1.20)	VII.I-8	3.3.1.58	B
Piping	LBS, SIA	Carbon Steel	Plant Indoor Air (Int)	Loss of material	Inspection of Internal Surfaces in Miscellaneous Piping and Ducting Components (B2.1.22)	V.A-19	3.2.1.32	B
Piping	LBS	Carbon Steel	Steam (Int)	Loss of material	Water Chemistry (B2.1.2) and One-Time Inspection (B2.1.16)	VIII.B1-8	3.4.1.37	E, 5
Piping	LBS, PB, SIA	Stainless Steel	Borated Water Leakage (Ext)	None	None	VII.J-16	3.3.1.99	A
Piping	LBS, PB, SIA	Stainless Steel	Demineralized Water (Int)	Loss of material	Water Chemistry (B2.1.2) and One-Time Inspection (B2.1.16)	VIII.E-29	3.4.1.16	A
Piping	PB, SIA	Stainless Steel	Dry Gas (Int)	None	None	VII.J-19	3.3.1.97	A
Piping	LBS, PB, SIA	Stainless Steel	Plant Indoor Air (Ext)	None	None	VII.J-15	3.3.1.94	A
Piping	LBS, SIA	Stainless Steel	Plant Indoor Air (Int)	Loss of material	Inspection of Internal Surfaces in Miscellaneous Piping and Ducting Components (B2.1.22)	V.A-26	3.2.1.08	E
Piping	LBS, PB, SIA	Stainless Steel	Sodium Hydroxide (Int)	Loss of material	Water Chemistry (B2.1.2) and One-Time Inspection (B2.1.16)	None	None	G, 2

Table 3.3.2-8 Auxiliary Systems – Summary of Aging Management Evaluation – Chemical and Volume Control System (Continued)

Component Type	Intended Function	Material	Environment	Aging Effect Requiring Management	Aging Management Program	NUREG-1801 Vol. 2 Item	Table 1 Item	Notes
Piping	PB	Stainless Steel	Treated Borated Water (Int)	Cumulative fatigue damage	Time-Limited Aging Analysis evaluated for the period of extended operation	VII.E1-16	3.3.1.02	A
Piping	LBS, PB, SIA	Stainless Steel	Treated Borated Water (Int)	Loss of material	Water Chemistry (B2.1.2) and One-Time Inspection (B2.1.16)	VII.E1-17	3.3.1.91	E, 5
Piping	LBS, PB	Stainless Steel	Treated Borated Water (Int)	Cracking	Water Chemistry (B2.1.2) and One-Time Inspection (B2.1.16)	VII.E1-20	3.3.1.90	E, 5
Pulsation Dampener	LBS	Stainless Steel	Demineralized Water (Int)	Loss of material	Water Chemistry (B2.1.2) and One-Time Inspection (B2.1.16)	VIII.E-29	3.4.1.16	A
Pulsation Dampener	LBS	Stainless Steel	Plant Indoor Air (Ext)	None	None	VII.J-15	3.3.1.94	C
Pump	PB	Carbon Steel	Lubricating Oil (Int)	Loss of material	Lubricating Oil Analysis (B2.1.23) and One-Time Inspection (B2.1.16)	VII.E1-19	3.3.1.14	B
Pump	PB	Carbon Steel	Plant Indoor Air (Ext)	Loss of material	External Surfaces Monitoring Program (B2.1.20)	VII.I-8	3.3.1.58	B
Pump	LBS, PB	Carbon Steel with Stainless Steel Cladding	Borated Water Leakage (Ext)	Loss of material	Boric Acid Corrosion (B2.1.4)	VII.E1-1	3.3.1.89	A
Pump	LBS	Carbon Steel with Stainless Steel Cladding	Demineralized Water (Int)	Loss of material	Water Chemistry (B2.1.2) and One-Time Inspection (B2.1.16)	VIII.E-29	3.4.1.16	A

Table 3.3.2-8 Auxiliary Systems – Summary of Aging Management Evaluation – Chemical and Volume Control System (Continued)

Component Type	Intended Function	Material	Environment	Aging Effect Requiring Management	Aging Management Program	NUREG-1801 Vol. 2 Item	Table 1 Item	Notes
Pump	LBS	Carbon Steel with Stainless Steel Cladding	Plant Indoor Air (Ext)	Loss of material	External Surfaces Monitoring Program (B2.1.20)	VII.I-8	3.3.1.58	B
Pump	PB	Carbon Steel with Stainless Steel Cladding	Treated Borated Water (Int)	Cracking	Water Chemistry (B2.1.2) and One-Time Inspection (B2.1.16)	VII.E1-7	3.3.1.09	E
Pump	LBS, PB	Carbon Steel with Stainless Steel Cladding	Treated Borated Water (Int)	Loss of material	Water Chemistry (B2.1.2) and One-Time Inspection (B2.1.16)	VII.E1-17	3.3.1.91	E, 5
Pump	PB	Carbon Steel with Stainless Steel Cladding	Treated Borated Water (Int)	Loss of material	Water Chemistry (B2.1.2) and One-Time Inspection (B2.1.16)	VII.E1-21	3.3.1.35	E
Pump	LBS, PB	Stainless Steel	Borated Water Leakage (Ext)	None	None	VII.J-16	3.3.1.99	A
Pump	LBS	Stainless Steel	Demineralized Water (Int)	Loss of material	Water Chemistry (B2.1.2) and One-Time Inspection (B2.1.16)	VIII.E-29	3.4.1.16	A
Pump	LBS	Stainless Steel	Plant Indoor Air (Ext)	None	None	VII.J-15	3.3.1.94	A

Table 3.3.2-8 Auxiliary Systems – Summary of Aging Management Evaluation – Chemical and Volume Control System (Continued)

Component Type	Intended Function	Material	Environment	Aging Effect Requiring Management	Aging Management Program	NUREG-1801 Vol. 2 Item	Table 1 Item	Notes
Pump	PB	Stainless Steel	Treated Borated Water (Int)	Cracking	Water Chemistry (B2.1.2) and One-Time Inspection (B2.1.16)	VII.E1-7	3.3.1.09	E
Pump	LBS, PB	Stainless Steel	Treated Borated Water (Int)	Loss of material	Water Chemistry (B2.1.2) and One-Time Inspection (B2.1.16)	VII.E1-17	3.3.1.91	E, 5
Pump	LBS	Stainless Steel	Treated Borated Water (Int)	Cracking	Water Chemistry (B2.1.2) and One-Time Inspection (B2.1.16)	VII.E1-20	3.3.1.90	E, 5
Regulators	SIA	Stainless Steel	Dry Gas (Int)	None	None	VII.J-19	3.3.1.97	A
Regulators	SIA	Stainless Steel	Plant Indoor Air (Ext)	None	None	VII.J-15	3.3.1.94	A
Sensor Element	LBS	Nickel Alloys	Borated Water Leakage (Ext)	None	None	None	None	G, 4
Sensor Element	LBS	Nickel Alloys	Treated Borated Water (Int)	Loss of material	Water Chemistry (B2.1.2) and One-Time Inspection (B2.1.16)	None	None	G, 3
Sight Gauge	PB	Carbon Steel	Lubricating Oil (Int)	Loss of material	Lubricating Oil Analysis (B2.1.23) and One-Time Inspection (B2.1.16)	VII.E1-19	3.3.1.14	B
Sight Gauge	PB	Carbon Steel	Plant Indoor Air (Ext)	Loss of material	External Surfaces Monitoring Program (B2.1.20)	VII.I-8	3.3.1.58	B
Sight Gauge	PB	Glass	Lubricating Oil (Int)	None	None	VII.J-10	3.3.1.93	A
Sight Gauge	LBS, PB	Glass	Plant Indoor Air (Ext)	None	None	VII.J-8	3.3.1.93	A
Sight Gauge	LBS	Glass	Treated Borated Water (Int)	None	None	VII.J-12	3.3.1.93	A
Sight Gauge	LBS, SIA	Stainless Steel	Borated Water Leakage (Ext)	None	None	VII.J-16	3.3.1.99	A

Table 3.3.2-8 Auxiliary Systems – Summary of Aging Management Evaluation – Chemical and Volume Control System (Continued)

Component Type	Intended Function	Material	Environment	Aging Effect Requiring Management	Aging Management Program	NUREG-1801 Vol. 2 Item	Table 1 Item	Notes
Sight Gauge	LBS, SIA	Stainless Steel	Demineralized Water (Int)	Loss of material	Water Chemistry (B2.1.2) and One-Time Inspection (B2.1.16)	VIII.E-29	3.4.1.16	A
Sight Gauge	LBS, SIA	Stainless Steel	Plant Indoor Air (Ext)	None	None	VII.J-15	3.3.1.94	A
Sight Gauge	LBS, SIA	Stainless Steel	Treated Borated Water (Int)	Loss of material	Water Chemistry (B2.1.2) and One-Time Inspection (B2.1.16)	VII.E1-17	3.3.1.91	E, 5
Strainer	FIL, PB	Stainless Steel	Lubricating Oil (Int)	Loss of material	Lubricating Oil Analysis (B2.1.23) and One-Time Inspection (B2.1.16)	VII.E1-15	3.3.1.33	D
Strainer	FIL, PB	Stainless Steel	Plant Indoor Air (Ext)	None	None	VII.J-15	3.3.1.94	A
Tank	PB	Carbon Steel	Lubricating Oil (Int)	Loss of material	Lubricating Oil Analysis (B2.1.23) and One-Time Inspection (B2.1.16)	VII.E1-19	3.3.1.14	D
Tank	PB	Carbon Steel	Plant Indoor Air (Ext)	Loss of material	External Surfaces Monitoring Program (B2.1.20)	VII.I-8	3.3.1.58	B
Tank	LBS, PB	Stainless Steel	Borated Water Leakage (Ext)	None	None	VII.J-16	3.3.1.99	C
Tank	LBS	Stainless Steel	Demineralized Water (Int)	Loss of material	Water Chemistry (B2.1.2) and One-Time Inspection (B2.1.16)	VIII.E-40	3.4.1.06	A
Tank	PB	Stainless Steel	Dry Gas (Int)	None	None	VII.J-19	3.3.1.97	C
Tank	PB	Stainless Steel	Lubricating Oil (Int)	Loss of material	Lubricating Oil Analysis (B2.1.23) and One-Time Inspection (B2.1.16)	VII.E1-15	3.3.1.33	D
Tank	LBS, PB, SIA	Stainless Steel	Plant Indoor Air (Ext)	None	None	VII.J-15	3.3.1.94	C

Table 3.3.2-8 Auxiliary Systems – Summary of Aging Management Evaluation – Chemical and Volume Control System (Continued)

Component Type	Intended Function	Material	Environment	Aging Effect Requiring Management	Aging Management Program	NUREG-1801 Vol. 2 Item	Table 1 Item	Notes
Tank	LBS, PB, SIA	Stainless Steel	Plant Indoor Air (Int)	Loss of material	Inspection of Internal Surfaces in Miscellaneous Piping and Ducting Components (B2.1.22)	V.A-26	3.2.1.08	E
Tank	LBS	Stainless Steel	Sodium Hydroxide (Int)	Loss of material	Water Chemistry (B2.1.2) and One-Time Inspection (B2.1.16)	None	None	G, 2
Tank	LBS	Stainless Steel	Steam (Int)	Cracking	Water Chemistry (B2.1.2) and One-Time Inspection (B2.1.16)	VIII.B1-2	3.4.1.39	E, 5
Tank	LBS	Stainless Steel	Steam (Int)	Loss of material	Water Chemistry (B2.1.2) and One-Time Inspection (B2.1.16)	VIII.B1-3	3.4.1.37	E, 5
Tank	LBS, PB	Stainless Steel	Treated Borated Water (Int)	Loss of material	Water Chemistry (B2.1.2) and One-Time Inspection (B2.1.16)	VII.E1-17	3.3.1.91	E, 5
Tank	LBS	Stainless Steel Cast Austenitic	Borated Water Leakage (Ext)	None	None	VII.J-16	3.3.1.99	C
Tank	SIA	Stainless Steel Cast Austenitic	Plant Indoor Air (Ext)	None	None	VII.J-15	3.3.1.94	C
Tank	SIA	Stainless Steel Cast Austenitic	Plant Indoor Air (Int)	Loss of material	Inspection of Internal Surfaces in Miscellaneous Piping and Ducting Components (B2.1.22)	V.A-26	3.2.1.08	E
Tank	LBS	Stainless Steel Cast Austenitic	Treated Borated Water (Int)	Loss of material	Water Chemistry (B2.1.2) and One-Time Inspection (B2.1.16)	VII.E1-17	3.3.1.91	E, 5
Test Connection	LBS, PB	Stainless Steel	Borated Water Leakage (Ext)	None	None	VII.J-16	3.3.1.99	A
Test Connection	LBS	Stainless Steel	Demineralized Water (Int)	Loss of material	Water Chemistry (B2.1.2) and One-Time Inspection (B2.1.16)	VIII.E-29	3.4.1.16	A

Table 3.3.2-8 Auxiliary Systems – Summary of Aging Management Evaluation – Chemical and Volume Control System (Continued)

Component Type	Intended Function	Material	Environment	Aging Effect Requiring Management	Aging Management Program	NUREG-1801 Vol. 2 Item	Table 1 Item	Notes
Test Connection	LBS	Stainless Steel	Plant Indoor Air (Ext)	None	None	VII.J-15	3.3.1.94	A
Test Connection	LBS, PB	Stainless Steel	Treated Borated Water (Int)	Loss of material	Water Chemistry (B2.1.2) and One-Time Inspection (B2.1.16)	VII.E1-17	3.3.1.91	E, 5
Trap	LBS	Carbon Steel	Plant Indoor Air (Ext)	Loss of material	External Surfaces Monitoring Program (B2.1.20)	VII.I-8	3.3.1.58	B
Trap	LBS	Carbon Steel	Steam (Int)	Loss of material	Water Chemistry (B2.1.2) and One-Time Inspection (B2.1.16)	VIII.B1-8	3.4.1.37	E, 5
Tubing	LBS, PB	Stainless Steel	Borated Water Leakage (Ext)	None	None	VII.J-16	3.3.1.99	A
Tubing	LBS	Stainless Steel	Demineralized Water (Int)	Loss of material	Water Chemistry (B2.1.2) and One-Time Inspection (B2.1.16)	VIII.E-29	3.4.1.16	A
Tubing	LBS	Stainless Steel	Plant Indoor Air (Ext)	None	None	VII.J-15	3.3.1.94	A
Tubing	LBS, PB	Stainless Steel	Treated Borated Water (Int)	Loss of material	Water Chemistry (B2.1.2) and One-Time Inspection (B2.1.16)	VII.E1-17	3.3.1.91	E, 5
Tubing	PB	Stainless Steel	Treated Borated Water (Int)	Cracking	Water Chemistry (B2.1.2) and One-Time Inspection (B2.1.16)	VII.E1-20	3.3.1.90	E, 5
Valve	PB	Carbon Steel	Closed Cycle Cooling Water (Int)	Loss of material	Closed-Cycle Cooling Water System (B2.1.10)	VII.C2-14	3.3.1.47	B
Valve	LBS, SIA	Carbon Steel	Demineralized Water (Int)	Loss of material	Water Chemistry (B2.1.2) and One-Time Inspection (B2.1.16)	VIII.D1-8	3.4.1.04	A
Valve	SIA	Carbon Steel	Dry Gas (Int)	None	None	VII.J-22	3.3.1.98	A

Table 3.3.2-8 Auxiliary Systems – Summary of Aging Management Evaluation – Chemical and Volume Control System (Continued)

Component Type	Intended Function	Material	Environment	Aging Effect Requiring Management	Aging Management Program	NUREG-1801 Vol. 2 Item	Table 1 Item	Notes
Valve	PB	Carbon Steel	Lubricating Oil (Int)	Loss of material	Lubricating Oil Analysis (B2.1.23) and One-Time Inspection (B2.1.16)	VII.E1-19	3.3.1.14	B
Valve	LBS, PB, SIA	Carbon Steel	Plant Indoor Air (Ext)	Loss of material	External Surfaces Monitoring Program (B2.1.20)	VII.I-8	3.3.1.58	B
Valve	SIA	Carbon Steel	Plant Indoor Air (Int)	Loss of material	Inspection of Internal Surfaces in Miscellaneous Piping and Ducting Components (B2.1.22)	V.A-19	3.2.1.32	B
Valve	LBS	Carbon Steel	Plant Indoor Air (Int)	Loss of material	Inspection of Internal Surfaces in Miscellaneous Piping and Ducting Components (B2.1.22)	VIII.B1-7	3.4.1.30	B
Valve	LBS, SIA	Carbon Steel	Steam (Int)	Loss of material	Water Chemistry (B2.1.2) and One-Time Inspection (B2.1.16)	VIII.B1-8	3.4.1.37	E, 5
Valve	LBS, SIA	Carbon Steel	Steam (Int)	Wall thinning	Flow-Accelerated Corrosion (B2.1.6)	VIII.B1-9	3.4.1.29	B
Valve	LBS	Cast Iron	Plant Indoor Air (Ext)	Loss of material	External Surfaces Monitoring Program (B2.1.20)	VII.I-8	3.3.1.58	B
Valve	LBS	Cast Iron	Ventilation Atmosphere (Int)	Loss of material	Inspection of Internal Surfaces in Miscellaneous Piping and Ducting Components (B2.1.22)	V.A-19	3.2.1.32	B
Valve	PB	Copper Alloy (> 15% Zinc)	Closed Cycle Cooling Water (Int)	Loss of material	Closed-Cycle Cooling Water System (B2.1.10)	VII.E1-11	3.3.1.51	B
Valve	PB	Copper Alloy (> 15% Zinc)	Closed Cycle Cooling Water (Int)	Loss of material	Selective Leaching of Materials (B2.1.17)	VII.E1-13	3.3.1.84	A

Table 3.3.2-8 Auxiliary Systems – Summary of Aging Management Evaluation – Chemical and Volume Control System (Continued)

Component Type	Intended Function	Material	Environment	Aging Effect Requiring Management	Aging Management Program	NUREG-1801 Vol. 2 Item	Table 1 Item	Notes
Valve	LBS	Copper Alloy (> 15% Zinc)	Demineralized Water (Int)	Loss of material	Selective Leaching of Materials (B2.1.17)	VII.C2-7	3.3.1.84	A
Valve	LBS	Copper Alloy (> 15% Zinc)	Demineralized Water (Int)	Loss of material	Water Chemistry (B2.1.2) and One-Time Inspection (B2.1.16)	VIII.A-5	3.4.1.15	A
Valve	PB	Copper Alloy (> 15% Zinc)	Lubricating Oil (Int)	Loss of material	Lubricating Oil Analysis (B2.1.23) and One-Time Inspection (B2.1.16)	VII.E1-12	3.3.1.26	B
Valve	LBS, PB	Copper Alloy (> 15% Zinc)	Plant Indoor Air (Ext)	None	None	VIII.I-2	3.4.1.41	A
Valve	LBS, PB, SIA	Stainless Steel	Borated Water Leakage (Ext)	None	None	VII.J-16	3.3.1.99	A
Valve	LBS, PB, SIA	Stainless Steel	Demineralized Water (Int)	Loss of material	Water Chemistry (B2.1.2) and One-Time Inspection (B2.1.16)	VIII.E-29	3.4.1.16	A
Valve	LBS, SIA	Stainless Steel	Dry Gas (Int)	None	None	VII.J-19	3.3.1.97	A
Valve	LBS, PB, SIA	Stainless Steel	Lubricating Oil (Int)	Loss of material	Lubricating Oil Analysis (B2.1.23) and One-Time Inspection (B2.1.16)	VII.E1-15	3.3.1.33	B
Valve	LBS, PB, SIA	Stainless Steel	Plant Indoor Air (Ext)	None	None	VII.J-15	3.3.1.94	A
Valve	LBS, PB, SIA	Stainless Steel	Plant Indoor Air (Int)	Loss of material	Inspection of Internal Surfaces in Miscellaneous Piping and Ducting Components (B2.1.22)	V.A-26	3.2.1.08	E

Table 3.3.2-8 Auxiliary Systems – Summary of Aging Management Evaluation – Chemical and Volume Control System (Continued)

Component Type	Intended Function	Material	Environment	Aging Effect Requiring Management	Aging Management Program	NUREG-1801 Vol. 2 Item	Table 1 Item	Notes
Valve	PB	Stainless Steel	Reactor Coolant (Int)	Cracking	ASME Section XI Inservice Inspection, Subsections IWB, IWC, and IWD for Class 1 components (B2.1.1) and Water Chemistry (B2.1.2) and One-Time Inspection of ASME Code Class 1 Small-Bore Piping (B2.1.19)	IV.C2-1	3.1.1.70	B
Valve	PB	Stainless Steel	Reactor Coolant (Int)	Loss of material	Water Chemistry (B2.1.2) and One-Time Inspection (B2.1.16)	IV.C2-15	3.1.1.83	E, 5
Valve	LBS, PB, SIA	Stainless Steel	Sodium Hydroxide (Int)	Loss of material	Water Chemistry (B2.1.2) and One-Time Inspection (B2.1.16)	None	None	G, 2
Valve	LBS, SIA	Stainless Steel	Steam (Int)	Cracking	Water Chemistry (B2.1.2) and One-Time Inspection (B2.1.16)	VIII.B1-2	3.4.1.39	E, 5
Valve	LBS, SIA	Stainless Steel	Steam (Int)	Loss of material	Water Chemistry (B2.1.2) and One-Time Inspection (B2.1.16)	VIII.B1-3	3.4.1.37	E, 5
Valve	LBS, PB, SIA	Stainless Steel	Treated Borated Water (Int)	Loss of material	Water Chemistry (B2.1.2) and One-Time Inspection (B2.1.16)	VII.E1-17	3.3.1.91	E, 5
Valve	PB	Stainless Steel	Treated Borated Water (Int)	Cracking	Water Chemistry (B2.1.2) and One-Time Inspection (B2.1.16)	VII.E1-20	3.3.1.90	E, 5
Valve	LBS, PB, SIA	Stainless Steel Cast Austenitic	Borated Water Leakage (Ext)	None	None	VII.J-16	3.3.1.99	A
Valve	LBS, PB, SIA	Stainless Steel Cast Austenitic	Treated Borated Water (Int)	Loss of material	Water Chemistry (B2.1.2) and One-Time Inspection (B2.1.16)	VII.E1-17	3.3.1.91	E, 5

Table 3.3.2-8 Auxiliary Systems – Summary of Aging Management Evaluation – Chemical and Volume Control System (Continued)

Component Type	Intended Function	Material	Environment	Aging Effect Requiring Management	Aging Management Program	NUREG-1801 Vol. 2 Item	Table 1 Item	Notes
Valve	PB	Stainless Steel Cast Austenitic	Treated Borated Water (Int)	Cracking	Water Chemistry (B2.1.2) and One-Time Inspection (B2.1.16)	VII.E1-20	3.3.1.90	E, 5
Vessel	LBS	Stainless Steel	Borated Water Leakage (Ext)	None	None	VII.J-16	3.3.1.99	C
Vessel	LBS	Stainless Steel	Treated Borated Water (Int)	Loss of material	Water Chemistry (B2.1.2) and One-Time Inspection (B2.1.16)	VII.E1-17	3.3.1.91	E, 5

Notes for Table 3.3.2-8:

Standard Notes:

A Consistent with NUREG-1801 item for component, material, environment, and aging effect. AMP is consistent with NUREG-1801 AMP.

B Consistent with NUREG-1801 item for component, material, environment, and aging effect. AMP takes some exceptions to NUREG-1801 AMP.

C Component is different, but consistent with NUREG-1801 item for material, environment, and aging effect. AMP is consistent with NUREG-1801 AMP.

D Component is different, but consistent with NUREG-1801 item for material, environment, and aging effect. AMP takes some exceptions to NUREG-1801 AMP.

E Consistent with NUREG-1801 for material, environment, and aging effect, but a different aging management program is credited or NUREG-1801 identifies a plant-specific aging management program.

G Environment not in NUREG-1801 for this component and material.

H Aging effect not in NUREG-1801 for this component, material and environment combination.

Plant Specific Notes:

1 The loss of preload aging effect is not identified in NUREG-1801 for this component, material, and environment combination. Loss of preload is managed by the Bolting Integrity program (B2.1.7).

2 There is no NUREG-1801 line for the environment of NaOH. The use of stainless steel up to 200° F and 50 weight percent NaOH is common in industrial applications with no special consideration for aging. The NaOH concentration is controlled by the Water Chemistry program. Therefore, Water Chemistry program (B2.1.2), supplemented by the One-Time Inspection program (B2.1.16), has been selected as the aging management program.

3 NUREG-1801 does not address the aging of nickel-alloys in treated borated water.

4 NUREG-1801 does not address the aging of nickel-alloys in borated water leakage. Nickel alloys subject to an air with borated water leakage environment are similar to stainless steel in a borated water leakage environment and do not experience aging effects due to borated water leakage.

5 The Water Chemistry program (B2.1.2) and the One-Time Inspection program (B2.1.16) manages loss of material due to pitting and crevice corrosion and cracking due to stress corrosion cracking. The One-Time Inspection program (B2.1.16) includes selected components at susceptible locations.

6 The reduction of heat transfer aging effect is not identified in NUREG-1801 for this component, material, and environment combination. Reduction of heat transfer is not expected in heat exchangers with reactor coolant or treated borated water environments as long as water chemistry is maintained. Reduction of heat transfer is managed with Water Chemistry (B2.1.2) and One Time Inspection (B2.1.16).

7 This component represents the carbon steel seal flange for affixing heating elements to tanks with Treated Borated Water internal. The seal flanges are isolated from the treated borated water through a gasket, which may leak putting the flange in contact with treated borated water.

Table 3.3.2-9 Auxiliary Systems – Summary of Aging Management Evaluation – Miscellaneous HVAC Systems

Component Type	Intended Function	Material	Environment	Aging Effect Requiring Management	Aging Management Program	NUREG-1801 Vol. 2 Item	Table 1 Item	Notes
Closure Bolting	PB, SIA	Carbon Steel	Plant Indoor Air (Ext)	Loss of material	Bolting Integrity (B2.1.7)	VII.I-4	3.3.1.43	B
Closure Bolting	PB, SIA	Carbon Steel	Plant Indoor Air (Ext)	Loss of preload	Bolting Integrity (B2.1.7)	VII.I-5	3.3.1.45	B
Closure Bolting	PB, SIA	Carbon Steel	Plant Indoor Air (Ext)	Loss of material	External Surfaces Monitoring Program (B2.1.20)	VII.I-7	3.3.1.55	B, 2
Compressor	SS	Carbon Steel	Dry Gas (Int)	None	None	VII.J-23	3.3.1.97	A
Compressor	SS	Carbon Steel	Plant Indoor Air (Ext)	Loss of material	External Surfaces Monitoring Program (B2.1.20)	VII.F4-1	3.3.1.56	B
Damper	FB, PB	Carbon Steel	Encased in Concrete (Ext)	None	None	VII.J-21	3.3.1.96	C
Damper	FB, PB, SS	Carbon Steel	Plant Indoor Air (Ext)	Loss of material	External Surfaces Monitoring Program (B2.1.20)	VII.F4-1	3.3.1.56	B
Damper	FB, PB, SS	Carbon Steel	Ventilation Atmosphere (Int)	Loss of material	Inspection of Internal Surfaces in Miscellaneous Piping and Ducting Components (B2.1.22)	VII.F4-2	3.3.1.72	B
Damper	SIA, SS	Carbon Steel (Galvanized)	Plant Indoor Air (Ext)	None	None	VII.J-6	3.3.1.92	C, 1

Table 3.3.2-9 Auxiliary Systems – Summary of Aging Management Evaluation – Miscellaneous HVAC Systems (Continued)

Component Type	Intended Function	Material	Environment	Aging Effect Requiring Management	Aging Management Program	NUREG-1801 Vol. 2 Item	Table 1 Item	Notes
Damper	SIA, SS	Carbon Steel (Galvanized)	Ventilation Atmosphere (Int)	Loss of material	Inspection of Internal Surfaces in Miscellaneous Piping and Ducting Components (B2.1.22)	VII.F4-2	3.3.1.72	B, 1
Ductwork	PB, SS	Carbon Steel	Plant Indoor Air (Ext)	Loss of material	External Surfaces Monitoring Program (B2.1.20)	VII.F4-1	3.3.1.56	B
Ductwork	PB, SS	Carbon Steel	Ventilation Atmosphere (Int)	Loss of material	Inspection of Internal Surfaces in Miscellaneous Piping and Ducting Components (B2.1.22)	VII.F4-2	3.3.1.72	B
Ductwork	PB, SIA, SS	Carbon Steel (Galvanized)	Plant Indoor Air (Ext)	None	None	VII.J-6	3.3.1.92	C, 1
Ductwork	PB, SIA, SS	Carbon Steel (Galvanized)	Ventilation Atmosphere (Int)	Loss of material	Inspection of Internal Surfaces in Miscellaneous Piping and Ducting Components (B2.1.22)	VII.F4-2	3.3.1.72	B, 1
Fan	PB, SS	Carbon Steel	Plant Indoor Air (Ext)	Loss of material	External Surfaces Monitoring Program (B2.1.20)	VII.F4-1	3.3.1.56	B

Table 3.3.2-9 Auxiliary Systems – Summary of Aging Management Evaluation – Miscellaneous HVAC Systems (Continued)

Component Type	Intended Function	Material	Environment	Aging Effect Requiring Management	Aging Management Program	NUREG-1801 Vol. 2 Item	Table 1 Item	Notes
Fan	PB, SS	Carbon Steel	Ventilation Atmosphere (Int)	Loss of material	Inspection of Internal Surfaces in Miscellaneous Piping and Ducting Components (B2.1.22)	VII.F4-2	3.3.1.72	B
Fan	SS	Carbon Steel (Galvanized)	Plant Indoor Air (Ext)	None	None	VII.J-6	3.3.1.92	C, 1
Fan	SS	Carbon Steel (Galvanized)	Ventilation Atmosphere (Int)	Loss of material	Inspection of Internal Surfaces in Miscellaneous Piping and Ducting Components (B2.1.22)	VII.F2-3	3.3.1.72	B, 1
Filter	SS	Carbon Steel	Plant Indoor Air (Ext)	Loss of material	External Surfaces Monitoring Program (B2.1.20)	VII.F4-1	3.3.1.56	B
Filter	SS	Carbon Steel	Ventilation Atmosphere (Int)	Loss of material	Inspection of Internal Surfaces in Miscellaneous Piping and Ducting Components (B2.1.22)	VII.F4-2	3.3.1.72	B
Flex Connectors	PB	Elastomer	Plant Indoor Air (Ext)	Hardening and loss of strength	External Surfaces Monitoring Program (B2.1.20)	VII.F4-6	3.3.1.11	E

Table 3.3.2-9 Auxiliary Systems – Summary of Aging Management Evaluation – Miscellaneous HVAC Systems (Continued)

Component Type	Intended Function	Material	Environment	Aging Effect Requiring Management	Aging Management Program	NUREG-1801 Vol. 2 Item	Table 1 Item	Notes
Flex Connectors	PB	Elastomer	Ventilation Atmosphere (Int)	Hardening and loss of strength	Inspection of Internal Surfaces in Miscellaneous Piping and Ducting Components (B2.1.22)	VII.F4-6	3.3.1.11	E
Heat Exchanger (Turbine Bldg)	LBS, SS	Carbon Steel	Closed Cycle Cooling Water (Int)	Loss of material	Closed-Cycle Cooling Water System (B2.1.10)	VII.F4-8	3.3.1.48	B
Heat Exchanger (Turbine Bldg)	LBS, SS	Carbon Steel	Plant Indoor Air (Ext)	Loss of material	External Surfaces Monitoring Program (B2.1.20)	VII.F4-7	3.3.1.59	B
Heat Exchanger (Turbine Bldg)	SS	Copper Alloy	Closed Cycle Cooling Water (Ext)	Loss of material	Closed-Cycle Cooling Water System (B2.1.10)	VII.F4-11	3.3.1.51	B
Heat Exchanger (Turbine Bldg)	SS	Copper Alloy	Dry Gas (Int)	None	None	VII.J-4	3.3.1.97	A
Heat Exchanger (Turbine Bldg)	SS	Copper Alloy	Ventilation Atmosphere (Ext)	Loss of material	External Surfaces Monitoring Program (B2.1.20)	VII.F4-12	3.3.1.25	E
Heater	SS	Stainless Steel	Plant Indoor Air (Ext)	None	None	VII.J-15	3.3.1.94	C
Heater	SS	Stainless Steel	Ventilation Atmosphere (Int)	Loss of material	Inspection of Internal Surfaces in Miscellaneous Piping and Ducting Components (B2.1.22)	VII.F2-1	3.3.1.27	E

Table 3.3.2-9 Auxiliary Systems – Summary of Aging Management Evaluation – Miscellaneous HVAC Systems (Continued)

Component Type	Intended Function	Material	Environment	Aging Effect Requiring Management	Aging Management Program	NUREG-1801 Vol. 2 Item	Table 1 Item	Notes
Piping	PB, SS	Copper Alloy	Dry Gas (Int)	None	None	VII.J-4	3.3.1.97	A
Piping	PB, SS	Copper Alloy	Plant Indoor Air (Ext)	Loss of material	External Surfaces Monitoring Program (B2.1.20)	VII.F4-12	3.3.1.25	E
Tubing	LBS, SS	Copper Alloy	Plant Indoor Air (Ext)	Loss of material	External Surfaces Monitoring Program (B2.1.20)	VII.F4-12	3.3.1.25	E
Tubing	LBS, SS	Copper Alloy	Plant Indoor Air (Int)	Loss of material	Inspection of Internal Surfaces in Miscellaneous Piping and Ducting Components (B2.1.22)	VII.G-9	3.3.1.28	E
Tubing	SS	Stainless Steel	Plant Indoor Air (Ext)	None	None	VII.J-15	3.3.1.94	A
Tubing	SS	Stainless Steel	Ventilation Atmosphere (Int)	Loss of material	Inspection of Internal Surfaces in Miscellaneous Piping and Ducting Components (B2.1.22)	VII.F2-1	3.3.1.27	E
Valve	SIA, SS	Copper Alloy	Plant Indoor Air (Ext)	None	None	VIII.I-2	3.4.1.41	C
Valve	SIA, SS	Copper Alloy	Ventilation Atmosphere (Int)	Loss of material	Inspection of Internal Surfaces in Miscellaneous Piping and Ducting Components (B2.1.22)	VII.G-9	3.3.1.28	E

Table 3.3.2-9 Auxiliary Systems – Summary of Aging Management Evaluation – Miscellaneous HVAC Systems (Continued)

Component Type	Intended Function	Material	Environment	Aging Effect Requiring Management	Aging Management Program	NUREG-1801 Vol. 2 Item	Table 1 Item	Notes
Valve	PB, SIA, SS	Stainless Steel	Plant Indoor Air (Ext)	None	None	VII.J-15	3.3.1.94	A
Valve	PB, SIA, SS	Stainless Steel	Ventilation Atmosphere (Int)	Loss of material	Inspection of Internal Surfaces in Miscellaneous Piping and Ducting Components (B2.1.22)	VII.F2-1	3.3.1.27	E

Notes for Table 3.3.2-9:

Standard Notes:

A Consistent with NUREG-1801 item for component, material, environment, and aging effect. AMP is consistent with NUREG-1801 AMP.

B Consistent with NUREG-1801 item for component, material, environment, and aging effect. AMP takes some exceptions to NUREG-1801 AMP.

C Component is different, but consistent with NUREG-1801 item for material, environment, and aging effect. AMP is consistent with NUREG-1801 AMP.

E Consistent with NUREG-1801 for material, environment, and aging effect, but a different aging management program is credited or NUREG-1801 identifies a plant-specific aging management program.

Plant Specific Notes:

1 Galvanized steel in ventilation systems may be zinc-galvanized steel or aluminized steel.

2 This NUREG-1801 line is used to evaluate ducting closure bolting.

Table 3.3.2-10 Auxiliary Systems – Summary of Aging Management Evaluation – Control Room HVAC System

Component Type	Intended Function	Material	Environment	Aging Effect Requiring Management	Aging Management Program	NUREG-1801 Vol. 2 Item	Table 1 Item	Notes
Closure Bolting	PB, SIA	Carbon Steel	Plant Indoor Air (Ext)	Loss of material	Bolting Integrity (B2.1.7)	VII.I-4	3.3.1.43	B
Closure Bolting	PB, SIA	Carbon Steel	Plant Indoor Air (Ext)	Loss of preload	Bolting Integrity (B2.1.7)	VII.I-5	3.3.1.45	B
Closure Bolting	PB, SIA	Carbon Steel	Plant Indoor Air (Ext)	Loss of material	External Surfaces Monitoring Program (B2.1.20)	VII.I-7	3.3.1.55	B, 6
Closure Bolting	PB, SIA	Carbon Steel	Ventilation Atmosphere (Ext)	Loss of material	Bolting Integrity (B2.1.7)	VII.I-4	3.3.1.43	B
Closure Bolting	PB, SIA	Carbon Steel	Ventilation Atmosphere (Ext)	Loss of preload	Bolting Integrity (B2.1.7)	VII.I-5	3.3.1.45	B
Closure Bolting	PB, SIA	Stainless Steel	Plant Indoor Air (Ext)	Loss of preload	Bolting Integrity (B2.1.7)	None	None	H, 1
Closure Bolting	PB, SIA	Stainless Steel	Plant Indoor Air (Ext)	None	None	VII.J-15	3.3.1.94	C
Closure Bolting	PB, SIA	Stainless Steel	Ventilation Atmosphere (Ext)	Loss of preload	Bolting Integrity (B2.1.7)	None	None	H, 1
Closure Bolting	PB, SIA	Stainless Steel	Ventilation Atmosphere (Ext)	None	None	VII.J-15	3.3.1.94	C
Compressor	PB	Carbon Steel	Dry Gas (Int)	None	None	VII.J-23	3.3.1.97	A, 5
Compressor	PB	Carbon Steel	Lubricating Oil (Int)	Loss of material	Lubricating Oil Analysis (B2.1.23) and One-Time Inspection (B2.1.16)	VII.F1-19	3.3.1.14	B

Table 3.3.2-10 Auxiliary Systems – Summary of Aging Management Evaluation – Control Room HVAC System (Continued)

Component Type	Intended Function	Material	Environment	Aging Effect Requiring Management	Aging Management Program	NUREG-1801 Vol. 2 Item	Table 1 Item	Notes
Compressor	PB	Carbon Steel	Plant Indoor Air (Ext)	Loss of material	External Surfaces Monitoring Program (B2.1.20)	VII.F1-2	3.3.1.56	D
Damper	PB	Carbon Steel	Plant Indoor Air (Ext)	Loss of material	External Surfaces Monitoring Program (B2.1.20)	VII.F1-2	3.3.1.56	B
Damper	PB	Carbon Steel	Ventilation Atmosphere (Int)	Loss of material	Inspection of Internal Surfaces in Miscellaneous Piping and Ducting Components (B2.1.22)	VII.F1-3	3.3.1.72	B
Damper	PB	Carbon Steel (Galvanized)	Encased in Concrete (Ext)	None	None	VII.J-21	3.3.1.96	C, 2
Damper	PB	Carbon Steel (Galvanized)	Encased in Concrete (Ext)	None	None	VII.J-21	3.3.1.96	C
Damper	FB	Carbon Steel (Galvanized)	Encased in Concrete (Ext)	None	None	VII.J-21	3.3.1.96	C, 2
Damper	FB, PB	Carbon Steel (Galvanized)	Plant Indoor Air (Ext)	None	None	VII.J-6	3.3.1.92	C, 2
Damper	PB	Carbon Steel (Galvanized)	Plant Indoor Air (Int)	Loss of material	Inspection of Internal Surfaces in Miscellaneous Piping and Ducting Components (B2.1.22)	VII.F1-3	3.3.1.72	B, 2
Damper	FB, PB	Carbon Steel (Galvanized)	Ventilation Atmosphere (Int)	Loss of material	Inspection of Internal Surfaces in Miscellaneous Piping and Ducting Components (B2.1.22)	VII.F1-3	3.3.1.72	B, 2

Table 3.3.2-10 Auxiliary Systems – Summary of Aging Management Evaluation – Control Room HVAC System (Continued)

Component Type	Intended Function	Material	Environment	Aging Effect Requiring Management	Aging Management Program	NUREG-1801 Vol. 2 Item	Table 1 Item	Notes
Damper	PB	Stainless Steel	Plant Indoor Air (Ext)	None	None	VII.J-15	3.3.1.94	C
Damper	PB	Stainless Steel	Ventilation Atmosphere (Int)	Loss of material	Inspection of Internal Surfaces in Miscellaneous Piping and Ducting Components (B2.1.22)	VII.F1-1	3.3.1.27	E
Ductwork	PB	Carbon Steel	Plant Indoor Air (Ext)	Loss of material	External Surfaces Monitoring Program (B2.1.20)	VII.F1-2	3.3.1.56	B
Ductwork	PB	Carbon Steel	Ventilation Atmosphere (Int)	Loss of material	Inspection of Internal Surfaces in Miscellaneous Piping and Ducting Components (B2.1.22)	VII.F1-3	3.3.1.72	B
Ductwork	PB	Carbon Steel (Galvanized)	Plant Indoor Air (Ext)	None	None	VII.J-6	3.3.1.92	C, 2
Ductwork	PB	Carbon Steel (Galvanized)	Ventilation Atmosphere (Int)	Loss of material	Inspection of Internal Surfaces in Miscellaneous Piping and Ducting Components (B2.1.22)	VII.F1-3	3.3.1.72	B, 2
Fan	PB, SIA	Carbon Steel	Plant Indoor Air (Ext)	Loss of material	External Surfaces Monitoring Program (B2.1.20)	VII.F1-2	3.3.1.56	B
Fan	PB, SIA	Carbon Steel	Ventilation Atmosphere (Int)	Loss of material	Inspection of Internal Surfaces in Miscellaneous Piping and Ducting Components (B2.1.22)	VII.F1-3	3.3.1.72	B

Table 3.3.2-10 Auxiliary Systems – Summary of Aging Management Evaluation – Control Room HVAC System (Continued)

Component Type	Intended Function	Material	Environment	Aging Effect Requiring Management	Aging Management Program	NUREG-1801 Vol. 2 Item	Table 1 Item	Notes
Filter	PB	Carbon Steel	Plant Indoor Air (Ext)	Loss of material	External Surfaces Monitoring Program (B2.1.20)	VII.F1-2	3.3.1.56	B
Filter	PB	Carbon Steel	Ventilation Atmosphere (Int)	Loss of material	Inspection of Internal Surfaces in Miscellaneous Piping and Ducting Components (B2.1.22)	VII.F1-3	3.3.1.72	B
Flex Connectors	PB	Elastomer	Plant Indoor Air (Ext)	Hardening and loss of strength	External Surfaces Monitoring Program (B2.1.20)	VII.F1-7	3.3.1.11	E
Flex Connectors	PB	Elastomer	Ventilation Atmosphere (Int)	Hardening and loss of strength	Inspection of Internal Surfaces in Miscellaneous Piping and Ducting Components (B2.1.22)	VII.F1-7	3.3.1.11	E
Flow Element	PB	Carbon Steel (Galvanized)	Plant Indoor Air (Ext)	None	None	VII.J-6	3.3.1.92	C, 2
Flow Element	PB	Carbon Steel (Galvanized)	Ventilation Atmosphere (Int)	Loss of material	Inspection of Internal Surfaces in Miscellaneous Piping and Ducting Components (B2.1.22)	VII.F1-3	3.3.1.72	B, 2
Heat Exchanger (Control Room HVAC)	HT, PB	Copper Alloy	Dry Gas (Int)	None	None	VII.J-4	3.3.1.97	A, 5

Table 3.3.2-10 Auxiliary Systems – Summary of Aging Management Evaluation – Control Room HVAC System (Continued)

Component Type	Intended Function	Material	Environment	Aging Effect Requiring Management	Aging Management Program	NUREG-1801 Vol. 2 Item	Table 1 Item	Notes
Heat Exchanger (Control Room HVAC)	HT, PB	Copper Alloy	Plant Indoor Air (Ext)	Loss of material	External Surfaces Monitoring Program (B2.1.20)	VII.F1-16	3.3.1.25	E
Heat Exchanger (Control Room HVAC)	HT, PB	Copper Alloy	Ventilation Atmosphere (Ext)	Loss of material	External Surfaces Monitoring Program (B2.1.20)	VII.F1-16	3.3.1.25	E
Piping	PB	Carbon Steel	Dry Gas (Int)	None	None	VII.J-23	3.3.1.97	A, 5
Piping	PB	Carbon Steel	Plant Indoor Air (Ext)	Loss of material	External Surfaces Monitoring Program (B2.1.20)	VII.I-11	3.3.1.58	B
Piping	PB	Carbon Steel (Galvanized)	Plant Indoor Air (Ext)	None	None	VII.J-6	3.3.1.92	A, 2
Piping	PB	Carbon Steel (Galvanized)	Ventilation Atmosphere (Int)	Loss of material	Inspection of Internal Surfaces in Miscellaneous Piping and Ducting Components (B2.1.22)	VII.F1-3	3.3.1.72	B, 2
Piping	PB	Copper Alloy	Dry Gas (Int)	None	None	VII.J-4	3.3.1.97	A, 5
Piping	PB	Copper Alloy	Plant Indoor Air (Ext)	Loss of material	External Surfaces Monitoring Program (B2.1.20)	VII.F1-16	3.3.1.25	E
Piping	PB	Glass	Dry Gas (Int)	None	None	None	None	G, 4

Table 3.3.2-10 Auxiliary Systems – Summary of Aging Management Evaluation – Control Room HVAC System (Continued)

Component Type	Intended Function	Material	Environment	Aging Effect Requiring Management	Aging Management Program	NUREG-1801 Vol. 2 Item	Table 1 Item	Notes
Piping	PB	Glass	Plant Indoor Air (Ext)	None	None	VII.J-8	3.3.1.93	A
Sight Gauge	PB	Glass	Lubricating Oil (Int)	None	None	VII.J-10	3.3.1.93	A
Sight Gauge	PB	Glass	Plant Indoor Air (Ext)	None	None	VII.J-8	3.3.1.93	A
Solenoid Valve	PB	Copper Alloy	Dry Gas (Int)	None	None	VII.J-4	3.3.1.97	A, 5
Solenoid Valve	PB	Copper Alloy	Plant Indoor Air (Ext)	Loss of material	External Surfaces Monitoring Program (B2.1.20)	VII.F1-16	3.3.1.25	E
Thermowell	PB	Copper Alloy	Plant Indoor Air (Ext)	Loss of material	External Surfaces Monitoring Program (B2.1.20)	VII.F1-16	3.3.1.25	E
Thermowell	PB	Copper Alloy	Ventilation Atmosphere (Int)	Loss of material	Inspection of Internal Surfaces in Miscellaneous Piping and Ducting Components (B2.1.22)	VII.F1-16	3.3.1.25	E
Tubing	LBS, SIA	Copper Alloy	Plant Indoor Air (Ext)	Loss of material	External Surfaces Monitoring Program (B2.1.20)	VII.F1-16	3.3.1.25	E
Tubing	LBS, SIA	Copper Alloy	Plant Indoor Air (Int)	None	None	None	None	G
Tubing	LBS, SIA	Stainless Steel	Plant Indoor Air (Ext)	None	None	VII.J-15	3.3.1.94	A

Table 3.3.2-10 Auxiliary Systems – Summary of Aging Management Evaluation – Control Room HVAC System (Continued)

Component Type	Intended Function	Material	Environment	Aging Effect Requiring Management	Aging Management Program	NUREG-1801 Vol. 2 Item	Table 1 Item	Notes
Tubing	LBS, SIA	Stainless Steel	Ventilation Atmosphere (Int)	Loss of material	Inspection of Internal Surfaces in Miscellaneous Piping and Ducting Components (B2.1.22)	VII.F1-1	3.3.1.27	E
Valve	SIA	Carbon Steel	Plant Indoor Air (Ext)	Loss of material	External Surfaces Monitoring Program (B2.1.20)	VII.I-8	3.3.1.58	B
Valve	SIA	Carbon Steel	Ventilation Atmosphere (Int)	Loss of material	Inspection of Internal Surfaces in Miscellaneous Piping and Ducting Components (B2.1.22)	VII.F1-3	3.3.1.72	D
Valve	PB, SIA	Copper Alloy	Plant Indoor Air (Ext)	Loss of material	External Surfaces Monitoring Program (B2.1.20)	VII.F1-16	3.3.1.25	E
Valve	SIA	Copper Alloy	Ventilation Atmosphere (Int)	None	None	None	None	G
Valve	PB	Copper Alloy	Ventilation Atmosphere (Int)	Loss of material	Inspection of Internal Surfaces in Miscellaneous Piping and Ducting Components (B2.1.22)	VII.F1-16	3.3.1.25	E
Valve	PB	Copper Alloy (> 15% Zinc)	Dry Gas (Int)	None	None	VII.J-4	3.3.1.97	A, 5
Valve	PB	Copper Alloy (> 15% Zinc)	Plant Indoor Air (Ext)	Loss of material	External Surfaces Monitoring Program (B2.1.20)	VII.F1-16	3.3.1.25	E
Valve	SIA	Copper Alloy (> 15% Zinc)	Plant Indoor Air (Ext)	None	None	VIII.I-2	3.4.1.41	A

Table 3.3.2-10 Auxiliary Systems – Summary of Aging Management Evaluation – Control Room HVAC System (Continued)

Component Type	Intended Function	Material	Environment	Aging Effect Requiring Management	Aging Management Program	NUREG-1801 Vol. 2 Item	Table 1 Item	Notes
Valve	PB, SIA	Copper Alloy (> 15% Zinc)	Ventilation Atmosphere (Int)	None	None	None	None	G, 3
Valve	PB, SIA	Stainless Steel	Plant Indoor Air (Ext)	None	None	VII.J-15	3.3.1.94	A
Valve	PB, SIA	Stainless Steel	Ventilation Atmosphere (Int)	Loss of material	Inspection of Internal Surfaces in Miscellaneous Piping and Ducting Components (B2.1.22)	VII.F1-1	3.3.1.27	E

Notes for Table 3.3.2-10:

Standard Notes:

A Consistent with NUREG-1801 item for component, material, environment, and aging effect. AMP is consistent with NUREG-1801 AMP.

B Consistent with NUREG-1801 item for component, material, environment, and aging effect. AMP takes some exceptions to NUREG-1801 AMP.

C Component is different, but consistent with NUREG-1801 item for material, environment, and aging effect. AMP is consistent with NUREG-1801 AMP.

D Component is different, but consistent with NUREG-1801 item for material, environment, and aging effect. AMP takes some exceptions to NUREG-1801 AMP.

E Consistent with NUREG-1801 for material, environment, and aging effect, but a different aging management program is credited or NUREG-1801 identifies a plant-specific aging management program.

G Environment not in NUREG-1801 for this component and material.

H Aging effect not in NUREG-1801 for this component, material and environment combination.

Plant Specific Notes:

1 The loss of preload aging effect is not identified in NUREG-1801 for this component, material, and environment combination. Loss of preload is managed by the Bolting Integrity program (B2.1.7).

2 Galvanized steel in ventilation systems may be zinc-galvanized steel or aluminized steel.

3 The components under consideration are instrument root valves. The operating temperature for these components is above dew point. Condensation can occur but rarely. Components surfaces are normally dry. Therefore, aging evaluation is consistent with NUREG-1801 line VIII.I-2 that evaluates copper alloys in a plant indoor (external) environment.

4 There are no aging effects for a sight glass in refrigerant (dry gas) environment, based on other NUREG-1801 items for glass, such as VII.J-8 for glass in a plant indoor air (uncontrolled) environment.

5 The dry gas is a refrigerant.

6 This NUREG-1801 line is used to evaluate ducting closure bolting.

Table 3.3.2-11 Auxiliary Systems – Summary of Aging Management Evaluation – Auxiliary Building HVAC System

Component Type	Intended Function	Material	Environment	Aging Effect Requiring Management	Aging Management Program	NUREG-1801 Vol. 2 Item	Table 1 Item	Notes
Closure Bolting	PB, SIA	Carbon Steel	Atmosphere/ Weather (Ext)	Loss of preload	Bolting Integrity (B2.1.7)	None	None	H, 1
Closure Bolting	PB, SIA	Carbon Steel	Atmosphere/ Weather (Ext)	Loss of material	Bolting Integrity (B2.1.7)	VII.I-1	3.3.1.43	B
Closure Bolting	LBS, PB, SIA	Carbon Steel	Plant Indoor Air (Ext)	Loss of material	Bolting Integrity (B2.1.7)	VII.I-4	3.3.1.43	B
Closure Bolting	LBS, PB, SIA	Carbon Steel	Plant Indoor Air (Ext)	Loss of preload	Bolting Integrity (B2.1.7)	VII.I-5	3.3.1.45	B
Closure Bolting	LBS, PB, SIA	Carbon Steel	Plant Indoor Air (Ext)	Loss of material	External Surfaces Monitoring Program (B2.1.20)	VII.I-7	3.3.1.55	B, 4
Closure Bolting	PB, SIA	Carbon Steel	Ventilation Atmosphere (Ext)	Loss of material	Bolting Integrity (B2.1.7)	VII.I-4	3.3.1.43	B
Closure Bolting	PB, SIA	Carbon Steel	Ventilation Atmosphere (Ext)	Loss of preload	Bolting Integrity (B2.1.7)	VII.I-5	3.3.1.45	B
Closure Bolting	PB, SIA	Stainless Steel	Plant Indoor Air (Ext)	Loss of preload	Bolting Integrity (B2.1.7)	None	None	H, 1
Closure Bolting	PB, SIA	Stainless Steel	Plant Indoor Air (Ext)	None	None	VII.J-15	3.3.1.94	C
Damper	FB, PB	Carbon Steel	Encased in Concrete (Ext)	None	None	VII.J-21	3.3.1.96	A
Damper	PB, SIA, SS	Carbon Steel	Plant Indoor Air (Ext)	Loss of material	External Surfaces Monitoring Program (B2.1.20)	VII.F2-2	3.3.1.56	B
Damper	PB	Carbon Steel	Ventilation Atmosphere (Ext)	Loss of material	External Surfaces Monitoring Program (B2.1.20)	VII.F2-2	3.3.1.56	B

Table 3.3.2-11 Auxiliary Systems – Summary of Aging Management Evaluation – Auxiliary Building HVAC System (Continued)

Component Type	Intended Function	Material	Environment	Aging Effect Requiring Management	Aging Management Program	NUREG-1801 Vol. 2 Item	Table 1 Item	Notes
Damper	FB, PB, SIA, SS	Carbon Steel	Ventilation Atmosphere (Int)	Loss of material	Inspection of Internal Surfaces in Miscellaneous Piping and Ducting Components (B2.1.22)	VII.F2-3	3.3.1.72	B
Damper	FB, PB	Carbon Steel (Galvanized)	Encased in Concrete (Ext)	None	None	VII.J-21	3.3.1.96	C, 2
Damper	FB, PB, SIA, SS	Carbon Steel (Galvanized)	Plant Indoor Air (Ext)	None	None	VII.J-6	3.3.1.92	C, 2
Damper	FB, PB, SIA, SS	Carbon Steel (Galvanized)	Ventilation Atmosphere (Int)	Loss of material	Inspection of Internal Surfaces in Miscellaneous Piping and Ducting Components (B2.1.22)	VII.F2-3	3.3.1.72	B, 2
Damper	PB	Cast Iron	Plant Indoor Air (Ext)	Loss of material	External Surfaces Monitoring Program (B2.1.20)	VII.F2-2	3.3.1.56	B
Damper	PB	Cast Iron	Ventilation Atmosphere (Int)	Loss of material	Inspection of Internal Surfaces in Miscellaneous Piping and Ducting Components (B2.1.22)	VII.F2-3	3.3.1.72	B
Damper	SS	Stainless Steel	Plant Indoor Air (Ext)	None	None	VII.J-15	3.3.1.94	C
Damper	SS	Stainless Steel	Ventilation Atmosphere (Int)	Loss of material	Inspection of Internal Surfaces in Miscellaneous Piping and Ducting Components (B2.1.22)	VII.F2-1	3.3.1.27	E
Ductwork	PB, SIA, SS	Carbon Steel (Galvanized)	Plant Indoor Air (Ext)	None	None	VII.J-6	3.3.1.92	C, 2

Table 3.3.2-11 Auxiliary Systems – Summary of Aging Management Evaluation – Auxiliary Building HVAC System (Continued)

Component Type	Intended Function	Material	Environment	Aging Effect Requiring Management	Aging Management Program	NUREG-1801 Vol. 2 Item	Table 1 Item	Notes
Ductwork	PB, SIA, SS	Carbon Steel (Galvanized)	Ventilation Atmosphere (Int)	Loss of material	Inspection of Internal Surfaces in Miscellaneous Piping and Ducting Components (B2.1.22)	VII.F2-3	3.3.1.72	B, 2
Ductwork	SS	Stainless Steel	Plant Indoor Air (Ext)	None	None	VII.J-15	3.3.1.94	C
Ductwork	SS	Stainless Steel	Ventilation Atmosphere (Int)	Loss of material	Inspection of Internal Surfaces in Miscellaneous Piping and Ducting Components (B2.1.22)	VII.F2-1	3.3.1.27	E
Fan	PB, SIA, SS	Carbon Steel	Plant Indoor Air (Ext)	Loss of material	External Surfaces Monitoring Program (B2.1.20)	VII.F2-2	3.3.1.56	B
Fan	PB, SIA, SS	Carbon Steel	Ventilation Atmosphere (Int)	Loss of material	Inspection of Internal Surfaces in Miscellaneous Piping and Ducting Components (B2.1.22)	VII.F2-3	3.3.1.72	B
Fan	SS	Carbon Steel (Galvanized)	Plant Indoor Air (Ext)	None	None	VII.J-6	3.3.1.92	C, 2
Fan	SS	Carbon Steel (Galvanized)	Ventilation Atmosphere (Int)	Loss of material	Inspection of Internal Surfaces in Miscellaneous Piping and Ducting Components (B2.1.22)	VII.F2-3	3.3.1.72	B, 2
Filter	LBS, PB, SS	Carbon Steel	Plant Indoor Air (Ext)	Loss of material	External Surfaces Monitoring Program (B2.1.20)	VII.F2-2	3.3.1.56	B

Table 3.3.2-11 Auxiliary Systems – Summary of Aging Management Evaluation – Auxiliary Building HVAC System (Continued)

Component Type	Intended Function	Material	Environment	Aging Effect Requiring Management	Aging Management Program	NUREG-1801 Vol. 2 Item	Table 1 Item	Notes
Filter	LBS	Carbon Steel	Plant Indoor Air (Int)	Loss of material	Inspection of Internal Surfaces in Miscellaneous Piping and Ducting Components (B2.1.22)	VII.G-23	3.3.1.71	B
Filter	PB, SS	Carbon Steel	Ventilation Atmosphere (Int)	Loss of material	Inspection of Internal Surfaces in Miscellaneous Piping and Ducting Components (B2.1.22))	VII.F2-3	3.3.1.72	B
Flex Connectors	PB	Elastomer	Atmosphere/ Weather (Ext)	Hardening and loss of strength	External Surfaces Monitoring Program (B2.1.20)	None	None	G
Flex Connectors	PB	Elastomer	Plant Indoor Air (Ext)	Loss of material	Inspection of Internal Surfaces in Miscellaneous Piping and Ducting Components (B2.1.22)	VII.F2-5	3.3.1.34	E
Flex Connectors	PB	Elastomer	Ventilation Atmosphere (Ext)	Loss of material	External Surfaces Monitoring Program (B2.1.20)	VII.F2-5	3.3.1.34	E
Flex Connectors	PB	Elastomer	Ventilation Atmosphere (Int)	Loss of material	Inspection of Internal Surfaces in Miscellaneous Piping and Ducting Components (B2.1.22)	VII.F2-6	3.3.1.34	E
Flexible Hoses	LBS	Elastomer	Closed Cycle Cooling Water (Int)	Hardening and loss of strength	Inspection of Internal Surfaces in Miscellaneous Piping and Ducting Components (B2.1.22)	None	None	G
Flexible Hoses	LBS	Elastomer	Plant Indoor Air (Ext)	Loss of material	External Surfaces Monitoring Program (B2.1.20)	VII.F2-5	3.3.1.34	E

Table 3.3.2-11 Auxiliary Systems – Summary of Aging Management Evaluation – Auxiliary Building HVAC System (Continued)

Component Type	Intended Function	Material	Environment	Aging Effect Requiring Management	Aging Management Program	NUREG-1801 Vol. 2 Item	Table 1 Item	Notes
Flexible Hoses	LBS	Elastomer	Plant Indoor Air (Ext)	Hardening and loss of strength	External Surfaces Monitoring Program (B2.1.20)	VII.F2-7	3.3.1.11	E
Flow Element	PB, SIA	Carbon Steel (Galvanized)	Plant Indoor Air (Ext)	None	None	VII.J-6	3.3.1.92	C, 2
Flow Element	PB, SIA	Carbon Steel (Galvanized)	Ventilation Atmosphere (Int)	Loss of material	Inspection of Internal Surfaces in Miscellaneous Piping and Ducting Components (B2.1.22)	VII.F2-3	3.3.1.72	B, 2
Flow Element	PB	Stainless Steel	Plant Indoor Air (Ext)	None	None	VII.J-15	3.3.1.94	A
Flow Element	PB	Stainless Steel	Ventilation Atmosphere (Int)	Loss of material	Inspection of Internal Surfaces in Miscellaneous Piping and Ducting Components (B2.1.22)	VII.F2-1	3.3.1.27	E
Heat Exchanger (Access Control HVAC)	LBS	Carbon Steel	Closed Cycle Cooling Water (Int)	Loss of material	Closed-Cycle Cooling Water System (B2.1.10)	VII.F2-9	3.3.1.48	B
Heat Exchanger (Access Control HVAC)	LBS	Carbon Steel	Plant Indoor Air (Ext)	Loss of material	External Surfaces Monitoring Program (B2.1.20)	VII.F2-8	3.3.1.59	B
Heat Exchanger (Access Control HVAC)	LBS	Copper Alloy	Closed Cycle Cooling Water (Int)	Loss of material	Closed-Cycle Cooling Water System (B2.1.10)	VII.F2-13	3.3.1.51	B

Table 3.3.2-11 Auxiliary Systems – Summary of Aging Management Evaluation – Auxiliary Building HVAC System (Continued)

Component Type	Intended Function	Material	Environment	Aging Effect Requiring Management	Aging Management Program	NUREG-1801 Vol. 2 Item	Table 1 Item	Notes
Heat Exchanger (Access Control HVAC)	LBS	Copper Alloy	Dry Gas (Int)	None	None	VII.J-4	3.3.1.97	A
Heat Exchanger (Access Control HVAC)	LBS	Copper Alloy	Plant Indoor Air (Ext)	None	None	VIII.I-2	3.4.1.41	A
Heat Exchanger (Aux Bldg HVAC)	LBS	Carbon Steel	Closed Cycle Cooling Water (Int)	Loss of material	Closed-Cycle Cooling Water System (B2.1.10)	VII.F2-9	3.3.1.48	B
Heat Exchanger (Aux Bldg HVAC)	LBS	Carbon Steel	Plant Indoor Air (Ext)	Loss of material	External Surfaces Monitoring Program (B2.1.20)	VII.F2-8	3.3.1.59	B
Heat Exchanger (Aux Bldg HVAC)	LBS	Copper Alloy	Closed Cycle Cooling Water (Int)	Loss of material	Closed-Cycle Cooling Water System (B2.1.10)	VII.F2-13	3.3.1.51	D
Heat Exchanger (Aux Bldg HVAC)	LBS	Copper Alloy	Dry Gas (Ext)	None	None	VII.J-4	3.3.1.97	C

Table 3.3.2-11 Auxiliary Systems – Summary of Aging Management Evaluation – Auxiliary Building HVAC System (Continued)

Component Type	Intended Function	Material	Environment	Aging Effect Requiring Management	Aging Management Program	NUREG-1801 Vol. 2 Item	Table 1 Item	Notes
Heat Exchanger (Aux Bldg HVAC)	LBS	Copper Alloy	Plant Indoor Air (Ext)	None	None	VIII.I-2	3.4.1.41	C
Heat Exchanger (Aux Bldg HVAC)	LBS	Copper Alloy	Secondary Water (Int)	Loss of material	Water Chemistry (B2.1.2) and One-Time Inspection (B2.1.16)	VIII.A-5	3.4.1.15	C
Heat Exchanger (Aux Bldg HVAC)	LBS	Copper Alloy	Ventilation Atmosphere (Ext)	None	None	VIII.I-2	3.4.1.41	C
Heat Exchanger (Fuel handling Bldg HVAC)	LBS	Copper Alloy	Secondary Water (Int)	Loss of material	Water Chemistry (B2.1.2) and One-Time Inspection (B2.1.16)	VIII.A-5	3.4.1.15	A
Heat Exchanger (Fuel handling Bldg HVAC)	LBS	Copper Alloy	Ventilation Atmosphere (Ext)	Loss of material	External Surfaces Monitoring Program (B2.1.20)	VII.F2-14	3.3.1.25	E
Heat Exchanger (Post LOCA Room Chiller Condenser)	LBS	Copper Alloy	Closed Cycle Cooling Water (Ext)	Loss of material	Closed-Cycle Cooling Water System (B2.1.10)	VII.F2-13	3.3.1.51	D

Table 3.3.2-11 Auxiliary Systems – Summary of Aging Management Evaluation – Auxiliary Building HVAC System (Continued)

Component Type	Intended Function	Material	Environment	Aging Effect Requiring Management	Aging Management Program	NUREG-1801 Vol. 2 Item	Table 1 Item	Notes
Heat Exchanger (Post LOCA Room Chiller Condenser)	LBS	Copper Alloy	Dry Gas (Int)	None	None	VII.J-4	3.3.1.97	A
Orifice	LBS	Stainless Steel	Plant Indoor Air (Ext)	None	None	VII.J-15	3.3.1.94	A
Orifice	LBS	Stainless Steel	Plant Indoor Air (Int)	Loss of material	Inspection of Internal Surfaces in Miscellaneous Piping and Ducting Components (B2.1.22)	VII.F2-1	3.3.1.27	E
Piping	LBS	Carbon Steel	Atmosphere/ Weather (Ext)	Loss of material	External Surfaces Monitoring Program (B2.1.20)	VII.I-9	3.3.1.58	B
Piping	LBS	Carbon Steel	Closed Cycle Cooling Water (Int)	Loss of material	Closed-Cycle Cooling Water System (B2.1.10)	VII.F2-18	3.3.1.47	B
Piping	LBS	Carbon Steel	Demineralized Water (Int)	Loss of material	Water Chemistry (B2.1.2) and One-Time Inspection (B2.1.16)	VIII.E-34	3.4.1.04	A
Piping	LBS	Carbon Steel	Plant Indoor Air (Ext)	Loss of material	External Surfaces Monitoring Program (B2.1.20)	VII.I-8	3.3.1.58	B
Piping	LBS	Carbon Steel	Plant Indoor Air (Int)	Loss of material	Inspection of Internal Surfaces in Miscellaneous Piping and Ducting Components (B2.1.22)	VII.G-23	3.3.1.71	B

Table 3.3.2-11 Auxiliary Systems – Summary of Aging Management Evaluation – Auxiliary Building HVAC System (Continued)

Component Type	Intended Function	Material	Environment	Aging Effect Requiring Management	Aging Management Program	NUREG-1801 Vol. 2 Item	Table 1 Item	Notes
Piping	LBS	Copper Alloy	Demineralized Water (Int)	Loss of material	Water Chemistry (B2.1.2) and One-Time Inspection (B2.1.16)	VIII.A-5	3.4.1.15	A
Piping	LBS	Copper Alloy	Plant Indoor Air (Ext)	None	None	VIII.I-2	3.4.1.41	A
Pump	LBS	Cast Iron	Closed Cycle Cooling Water (Int)	Loss of material	Closed-Cycle Cooling Water System (B2.1.10)	VII.F2-18	3.3.1.47	B
Pump	LBS	Cast Iron	Plant Indoor Air (Ext)	Loss of material	External Surfaces Monitoring Program (B2.1.20)	VII.I-8	3.3.1.58	B
Sight Gauge	LBS	Glass	Closed Cycle Cooling Water (Int)	None	None	VII.J-13	3.3.1.93	A
Sight Gauge	LBS	Glass	Demineralized Water (Int)	None	None	VII.J-13	3.3.1.93	A
Sight Gauge	LBS	Glass	Plant Indoor Air (Ext)	None	None	VIII.I-5	3.4.1.40	A
Strainer	LBS	Stainless Steel	Plant Indoor Air (Ext)	None	None	VII.J-15	3.3.1.94	A
Strainer	LBS	Stainless Steel	Potable Water (Int)	Loss of material	Inspection of Internal Surfaces in Miscellaneous Piping and Ducting Components (B2.1.22)	None	None	G
Test Connection	LBS, SIA	Stainless Steel	Plant Indoor Air (Ext)	None	None	VII.J-15	3.3.1.94	A

Table 3.3.2-11 Auxiliary Systems – Summary of Aging Management Evaluation – Auxiliary Building HVAC System (Continued)

Component Type	Intended Function	Material	Environment	Aging Effect Requiring Management	Aging Management Program	NUREG-1801 Vol. 2 Item	Table 1 Item	Notes
Test Connection	LBS	Stainless Steel	Plant Indoor Air (Int)	Loss of material	Inspection of Internal Surfaces in Miscellaneous Piping and Ducting Components (B2.1.22)	VII.F2-1	3.3.1.27	E
Test Connection	SIA	Stainless Steel	Ventilation Atmosphere (Int)	Loss of material	Inspection of Internal Surfaces in Miscellaneous Piping and Ducting Components (B2.1.22)	VII.F2-1	3.3.1.27	E
Trap	SIA	Stainless Steel	Plant Indoor Air (Ext)	None	None	VII.J-15	3.3.1.94	A
Trap	SIA	Stainless Steel	Plant Indoor Air (Int)	Loss of material	Inspection of Internal Surfaces in Miscellaneous Piping and Ducting Components (B2.1.22)	VII.F2-1	3.3.1.27	E
Tubing	LBS	Copper Alloy	Closed Cycle Cooling Water (Int)	Loss of material	Closed-Cycle Cooling Water System (B2.1.10)	VII.F2-13	3.3.1.51	B
Tubing	LBS	Copper Alloy	Plant Indoor Air (Ext)	None	None	VIII.I-2	3.4.1.41	A
Tubing	LBS	Copper Alloy	Raw Water (Int)	Loss of material	Inspection of Internal Surfaces in Miscellaneous Piping and Ducting Components (B2.1.22)	VII.C1-9	3.3.1.81	E, 3
Tubing	PB	Stainless Steel	Atmosphere/ Weather (Ext)	Loss of material	External Surfaces Monitoring Program (B2.1.20)	None	None	G

Table 3.3.2-11 Auxiliary Systems – Summary of Aging Management Evaluation – Auxiliary Building HVAC System (Continued)

Component Type	Intended Function	Material	Environment	Aging Effect Requiring Management	Aging Management Program	NUREG-1801 Vol. 2 Item	Table 1 Item	Notes
Tubing	LBS	Stainless Steel	Closed Cycle Cooling Water (Int)	Loss of material	Closed-Cycle Cooling Water System (B2.1.10)	VII.C2-10	3.3.1.50	B
Tubing	LBS	Stainless Steel	Plant Indoor Air (Ext)	None	None	VII.J-15	3.3.1.94	A
Tubing	PB	Stainless Steel	Ventilation Atmosphere (Int)	Loss of material	Inspection of Internal Surfaces in Miscellaneous Piping and Ducting Components (B2.1.22)	VII.F2-1	3.3.1.27	E
Valve	LBS	Carbon Steel	Closed Cycle Cooling Water (Int)	Loss of material	Closed-Cycle Cooling Water System (B2.1.10)	VII.F2-18	3.3.1.47	B
Valve	LBS	Carbon Steel	Demineralized Water (Int)	Loss of material	Water Chemistry (B2.1.2) and One-Time Inspection (B2.1.16)	VIII.E-34	3.4.1.04	A
Valve	LBS	Carbon Steel	Plant Indoor Air (Ext)	Loss of material	External Surfaces Monitoring Program (B2.1.20)	VII.I-8	3.3.1.58	B
Valve	LBS	Carbon Steel	Plant Indoor Air (Int)	Loss of material	Inspection of Internal Surfaces in Miscellaneous Piping and Ducting Components (B2.1.22)	VII.G-23	3.3.1.71	B
Valve	LBS	Carbon Steel	Potable Water (Int)	Loss of material	Inspection of Internal Surfaces in Miscellaneous Piping and Ducting Components (B2.1.22)	None	None	G

Table 3.3.2-11 Auxiliary Systems – Summary of Aging Management Evaluation – Auxiliary Building HVAC System (Continued)

Component Type	Intended Function	Material	Environment	Aging Effect Requiring Management	Aging Management Program	NUREG-1801 Vol. 2 Item	Table 1 Item	Notes
Valve	LBS	Copper Alloy	Closed Cycle Cooling Water (Int)	Loss of material	Closed-Cycle Cooling Water System (B2.1.10)	VII.F2-13	3.3.1.51	B
Valve	LBS, PB	Copper Alloy	Demineralized Water (Int)	Loss of material	Water Chemistry (B2.1.2) and One-Time Inspection (B2.1.16)	VIII.A-5	3.4.1.15	A
Valve	LBS, PB, SIA	Copper Alloy	Plant Indoor Air (Ext)	None	None	VIII.I-2	3.4.1.41	A
Valve	LBS	Copper Alloy	Potable Water (Int)	Loss of material	Inspection of Internal Surfaces in Miscellaneous Piping and Ducting Components (B2.1.22)	None	None	G
Valve	PB, SIA	Copper Alloy	Ventilation Atmosphere (Int)	Loss of material	Inspection of Internal Surfaces in Miscellaneous Piping and Ducting Components (B2.1.22)	VII.F2-14	3.3.1.25	E
Valve	LBS	Copper Alloy (> 15% Zinc)	Closed Cycle Cooling Water (Int)	Loss of material	Selective Leaching of Materials (B2.1.17)	VII.F2-15	3.3.1.84	A
Valve	LBS	Copper Alloy (> 15% Zinc)	Demineralized Water (Int)	Loss of material	Selective Leaching of Materials (B2.1.17)	VII.C2-7	3.3.1.84	A
Valve	LBS	Copper Alloy (> 15% Zinc)	Plant Indoor Air (Ext)	Loss of material	External Surfaces Monitoring Program (B2.1.20)	VII.F2-14	3.3.1.25	E
Valve	LBS	Copper Alloy (> 15% Zinc)	Potable Water (Int)	Loss of material	Selective Leaching of Materials (B2.1.17)	None	None	G
Valve	PB	Stainless Steel	Atmosphere/ Weather (Ext)	Loss of material	External Surfaces Monitoring Program (B2.1.20)	None	None	G

Table 3.3.2-11 Auxiliary Systems – Summary of Aging Management Evaluation – Auxiliary Building HVAC System (Continued)

Component Type	Intended Function	Material	Environment	Aging Effect Requiring Management	Aging Management Program	NUREG-1801 Vol. 2 Item	Table 1 Item	Notes
Valve	LBS	Stainless Steel	Closed Cycle Cooling Water (Int)	Loss of material	Closed-Cycle Cooling Water System (B2.1.10)	VII.C2-10	3.3.1.50	B
Valve	LBS	Stainless Steel	Demineralized Water (Int)	Loss of material	Water Chemistry (B2.1.2) and One-Time Inspection (B2.1.16)	VIII.E-29	3.4.1.16	A
Valve	LBS, PB, SIA	Stainless Steel	Plant Indoor Air (Ext)	None	None	VII.J-15	3.3.1.94	A
Valve	PB	Stainless Steel	Plant Indoor Air (Int)	Loss of material	Inspection of Internal Surfaces in Miscellaneous Piping and Ducting Components (B2.1.22)	VII.F2-1	3.3.1.27	E
Valve	LBS, PB	Stainless Steel	Ventilation Atmosphere (Ext)	None	None	VII.J-15	3.3.1.94	A
Valve	PB, SIA	Stainless Steel	Ventilation Atmosphere (Int)	Loss of material	Inspection of Internal Surfaces in Miscellaneous Piping and Ducting Components (B2.1.22)	VII.F2-1	3.3.1.27	E

Notes for Table 3.3.2-11:

Standard Notes:

A Consistent with NUREG-1801 item for component, material, environment, and aging effect. AMP is consistent with NUREG-1801 AMP.

B Consistent with NUREG-1801 item for component, material, environment, and aging effect. AMP takes some exceptions to NUREG-1801 AMP.

C Component is different, but consistent with NUREG-1801 item for material, environment, and aging effect. AMP is consistent with NUREG-1801 AMP.

D Component is different, but consistent with NUREG-1801 item for material, environment, and aging effect. AMP takes some exceptions to NUREG-1801 AMP.
E Consistent with NUREG-1801 for material, environment, and aging effect, but a different aging management program is credited or NUREG-1801 identifies a plant-specific aging management program.
G Environment not in NUREG-1801 for this component and material.
H Aging effect not in NUREG-1801 for this component, material and environment combination.

Plant Specific Notes:
1 The loss of preload aging effect is not identified in NUREG-1801 for this component, material, and environment combination. Loss of preload is managed by the Bolting Integrity program (B2.1.7).
2 Galvanized steel in ventilation systems may be zinc-galvanized steel or aluminized steel.
3 Component internal environment is condensation from cooling coil drains that is evaluated as raw water per NUREG-1801, Section IX. This raw water environment is managed by Inspection of Internal Surfaces in Miscellaneous Piping and Ducting program (B2.1.22) because it is not suitable for management by Open-Cycle Cooling Water System program (B2.1.9).
4 This NUREG-1801 line is used to evaluate ducting closure bolting.

Table 3.3.2-12 Auxiliary Systems – Summary of Aging Management Evaluation – Fire Protection System

Component Type	Intended Function	Material	Environment	Aging Effect Requiring Management	Aging Management Program	NUREG-1801 Vol. 2 Item	Table 1 Item	Notes
Bellows	PB	Carbon Steel	Plant Indoor Air (Ext)	Loss of material	External Surfaces Monitoring Program (B2.1.20)	VII.I-8	3.3.1.58	B
Bellows	PB	Carbon Steel	Raw Water (Int)	Loss of material	Fire Water System (B2.1.13)	VII.G-24	3.3.1.68	B
Closure Bolting	PB	Carbon Steel	Atmosphere/ Weather (Ext)	Loss of preload	Bolting Integrity (B2.1.7)	None	None	H, 1
Closure Bolting	PB	Carbon Steel	Atmosphere/ Weather (Ext)	Loss of material	Bolting Integrity (B2.1.7)	VII.I-1	3.3.1.43	B
Closure Bolting	PB	Carbon Steel	Buried (Ext)	Loss of material	Buried Piping and Tanks Inspection (B2.1.18)	VII.G-25	3.3.1.19	D
Closure Bolting	PB	Carbon Steel	Plant Indoor Air (Ext)	Loss of material	Bolting Integrity (B2.1.7)	VII.I-4	3.3.1.43	B
Closure Bolting	PB	Carbon Steel	Plant Indoor Air (Ext)	Loss of preload	Bolting Integrity (B2.1.7)	VII.I-5	3.3.1.45	B
Closure Bolting	PB	Stainless Steel	Plant Indoor Air (Ext)	Loss of preload	Bolting Integrity (B2.1.7)	None	None	H, 1
Closure Bolting	PB	Stainless Steel	Plant Indoor Air (Ext)	None	None	VII.J-15	3.3.1.94	C
Flow Element	PB	Carbon Steel	Plant Indoor Air (Ext)	Loss of material	External Surfaces Monitoring Program (B2.1.20)	VII.I-8	3.3.1.58	B
Flow Element	PB	Carbon Steel	Raw Water (Int)	Loss of material	Fire Water System (B2.1.13)	VII.G-24	3.3.1.68	B
Flow Element	PB	Stainless Steel	Plant Indoor Air (Ext)	None	None	VII.J-15	3.3.1.94	A
Flow Element	PB	Stainless Steel	Raw Water (Int)	Loss of material	Fire Water System (B2.1.13)	VII.G-19	3.3.1.69	B
Flow Indicator	PB	Carbon Steel	Plant Indoor Air (Ext)	Loss of material	External Surfaces Monitoring Program (B2.1.20)	VII.I-8	3.3.1.58	B

Table 3.3.2-12 Auxiliary Systems – Summary of Aging Management Evaluation – Fire Protection System (Continued)

Component Type	Intended Function	Material	Environment	Aging Effect Requiring Management	Aging Management Program	NUREG-1801 Vol. 2 Item	Table 1 Item	Notes
Flow Indicator	PB	Carbon Steel	Raw Water (Int)	Loss of material	Fire Water System (B2.1.13)	VII.G-24	3.3.1.68	B
Flow Indicator	PB	Glass	Plant Indoor Air (Ext)	None	None	VII.J-8	3.3.1.93	A
Flow Indicator	PB	Glass	Raw Water (Int)	None	None	VII.J-11	3.3.1.93	A
Hose Station	PB	Carbon Steel	Plant Indoor Air (Ext)	Loss of material	External Surfaces Monitoring Program (B2.1.20)	VII.I-8	3.3.1.58	B
Hose Station	PB	Carbon Steel	Raw Water (Int)	Loss of material	Fire Water System (B2.1.13)	VII.G-24	3.3.1.68	B
Hydrant	PB	Cast Iron	Buried (Ext)	Loss of material	Buried Piping and Tanks Inspection (B2.1.18)	VII.G-25	3.3.1.19	B
Hydrant	PB	Cast Iron	Raw Water (Int)	Loss of material	Fire Water System (B2.1.13)	VII.G-24	3.3.1.68	B
Hydrant	PB	Ductile Iron	Buried (Ext)	Loss of material	Buried Piping and Tanks Inspection (B2.1.18)	VII.G-25	3.3.1.19	B
Hydrant	PB	Ductile Iron	Raw Water (Int)	Loss of material	Fire Water System (B2.1.13)	VII.G-24	3.3.1.68	B
Orifice	PB	Stainless Steel	Plant Indoor Air (Ext)	None	None	VII.J-15	3.3.1.94	A
Orifice	PB	Stainless Steel	Raw Water (Int)	Loss of material	Fire Water System (B2.1.13)	VII.G-19	3.3.1.69	B
Piping	PB	Asbestos Cement	Buried (Ext)	Loss of material, cracking and changes in material properties	Buried Piping and Tanks Inspection (B2.1.18)	None	None	F

Table 3.3.2-12 Auxiliary Systems – Summary of Aging Management Evaluation – Fire Protection System (Continued)

Component Type	Intended Function	Material	Environment	Aging Effect Requiring Management	Aging Management Program	NUREG-1801 Vol. 2 Item	Table 1 Item	Notes
Piping	PB	Asbestos Cement	Raw Water (Int)	Loss of material, cracking and changes in material properties	Inspection of Internal Surfaces in Miscellaneous Piping and Ducting Components (B2.1.22)	None	None	F
Piping	LBS, PB	Carbon Steel	Atmosphere/ Weather (Ext)	Loss of material	External Surfaces Monitoring Program (B2.1.20)	VII.I-9	3.3.1.58	B
Piping	LBS, PB	Carbon Steel	Dry Gas (Int)	None	None	VII.J-23	3.3.1.97	A
Piping	LBS, PB	Carbon Steel	Plant Indoor Air (Ext)	Loss of material	External Surfaces Monitoring Program (B2.1.20)	VII.I-8	3.3.1.58	B
Piping	LBS, PB	Carbon Steel	Raw Water (Int)	Loss of material	Fire Water System (B2.1.13)	VII.G-24	3.3.1.68	B
Piping	PB	Carbon Steel (Galvanized)	Plant Indoor Air (Ext)	Loss of material	External Surfaces Monitoring Program (B2.1.20)	VII.I-8	3.3.1.58	B
Piping	PB	Carbon Steel (Galvanized)	Raw Water (Int)	Loss of material	Fire Water System (B2.1.13)	VII.G-24	3.3.1.68	B
Piping	PB	Polyvinyl Chloride (PVC)	Buried (Ext)	None	None	None	None	F
Piping	PB	Polyvinyl Chloride (PVC)	Raw Water (Int)	None	None	None	None	F
Piping	LBS, PB	Stainless Steel	Plant Indoor Air (Ext)	None	None	VII.J-15	3.3.1.94	A
Piping	LBS, PB	Stainless Steel	Raw Water (Int)	Loss of material	Fire Water System (B2.1.13)	VII.G-19	3.3.1.69	B

Table 3.3.2-12 Auxiliary Systems – Summary of Aging Management Evaluation – Fire Protection System (Continued)

Component Type	Intended Function	Material	Environment	Aging Effect Requiring Management	Aging Management Program	NUREG-1801 Vol. 2 Item	Table 1 Item	Notes
Pump	PB	Aluminum	Plant Indoor Air (Ext)	None	None	V.F-2	3.2.1.50	A
Pump	PB	Aluminum	Plant Indoor Air (Int)	None	None	V.F-2	3.2.1.50	A, 2
Pump	PB	Cast Iron	Plant Indoor Air (Ext)	Loss of material	External Surfaces Monitoring Program (B2.1.20)	VII.I-8	3.3.1.58	B
Pump	PB	Cast Iron	Raw Water (Int)	Loss of material	Fire Water System (B2.1.13)	VII.G-24	3.3.1.68	B
RCP Oil Collection Reservoir	PB	Carbon Steel (Galvanized)	Plant Indoor Air (Ext)	Loss of material	External Surfaces Monitoring Program (B2.1.20)	VII.I-8	3.3.1.58	B, 3
Solenoid Valve	PB	Carbon Steel	Dry Gas (Int)	None	None	VII.J-23	3.3.1.97	A
Solenoid Valve	PB	Carbon Steel	Plant Indoor Air (Ext)	Loss of material	External Surfaces Monitoring Program (B2.1.20)	VII.I-8	3.3.1.58	B
Spray Nozzle	SP	Stainless Steel	Plant Indoor Air (Ext)	None	None	VII.J-15	3.3.1.94	A
Spray Nozzle	SP	Stainless Steel	Plant Indoor Air (Int)	None	None	None	None	G
Strainer	PB	Carbon Steel	Atmosphere/ Weather (Ext)	Loss of material	External Surfaces Monitoring Program (B2.1.20)	VII.I-9	3.3.1.58	B
Strainer	PB	Carbon Steel	Plant Indoor Air (Ext)	Loss of material	External Surfaces Monitoring Program (B2.1.20)	VII.I-8	3.3.1.58	B
Strainer	PB	Carbon Steel	Raw Water (Int)	Loss of material	Fire Water System (B2.1.13)	VII.G-24	3.3.1.68	B
Tank	PB	Carbon Steel	Dry Gas (Int)	None	None	VII.J-23	3.3.1.97	A

Table 3.3.2-12 Auxiliary Systems – Summary of Aging Management Evaluation – Fire Protection System (Continued)

Component Type	Intended Function	Material	Environment	Aging Effect Requiring Management	Aging Management Program	NUREG-1801 Vol. 2 Item	Table 1 Item	Notes
Tank	SS	Carbon Steel	Fuel Oil (Int)	Loss of material	Fire Protection (B2.1.12) and Fuel Oil Chemistry (B2.1.14)	VII.G-21	3.3.1.64	B
Tank	PB, SS	Carbon Steel	Plant Indoor Air (Ext)	Loss of material	External Surfaces Monitoring Program (B2.1.20)	VII.I-8	3.3.1.58	B
Tank	PB	Carbon Steel	Raw Water (Ext)	Loss of material	Fire Water System (B2.1.13)	VII.G-24	3.3.1.68	D
Tank	PB	Carbon Steel	Raw Water (Int)	Loss of material	Fire Water System (B2.1.13)	VII.G-24	3.3.1.68	D
Test Connection	PB	Carbon Steel	Plant Indoor Air (Ext)	Loss of material	External Surfaces Monitoring Program (B2.1.20)	VII.I-8	3.3.1.58	B
Test Connection	PB	Carbon Steel	Raw Water (Int)	Loss of material	Fire Water System (B2.1.13)	VII.G-24	3.3.1.68	B
Trailer	SS	Carbon Steel	Atmosphere/ Weather (Ext)	Loss of material	External Surfaces Monitoring Program (B2.1.20)	VII.I-9	3.3.1.58	B
Tubing	LBS, PB	Stainless Steel	Plant Indoor Air (Ext)	None	None	VII.J-15	3.3.1.94	A
Tubing	LBS, PB	Stainless Steel	Raw Water (Int)	Loss of material	Fire Water System (B2.1.13)	VII.G-19	3.3.1.69	B
Valve	PB	Aluminum	Dry Gas (Int)	None	None	VII.J-2	3.3.1.97	A
Valve	PB	Aluminum	Plant Indoor Air (Ext)	None	None	VII.J-1	3.3.1.95	A
Valve	PB	Carbon Steel	Atmosphere/ Weather (Ext)	Loss of material	External Surfaces Monitoring Program (B2.1.20)	VII.I-9	3.3.1.58	B
Valve	PB	Carbon Steel	Buried (Ext)	Loss of material	Buried Piping and Tanks Inspection (B2.1.18)	VII.G-25	3.3.1.19	B
Valve	PB	Carbon Steel	Dry Gas (Int)	None	None	VII.J-23	3.3.1.97	A

Table 3.3.2-12 Auxiliary Systems – Summary of Aging Management Evaluation – Fire Protection System (Continued)

Component Type	Intended Function	Material	Environment	Aging Effect Requiring Management	Aging Management Program	NUREG-1801 Vol. 2 Item	Table 1 Item	Notes
Valve	PB	Carbon Steel	Plant Indoor Air (Ext)	Loss of material	External Surfaces Monitoring Program (B2.1.20)	VII.I-8	3.3.1.58	B
Valve	PB	Carbon Steel	Plant Indoor Air (Int)	Loss of material	Inspection of Internal Surfaces in Miscellaneous Piping and Ducting Components (B2.1.22)	VII.G-23	3.3.1.71	B
Valve	PB	Carbon Steel	Raw Water (Int)	Loss of material	Fire Water System (B2.1.13)	VII.G-24	3.3.1.68	B
Valve	PB	Cast Iron	Atmosphere/ Weather (Ext)	Loss of material	External Surfaces Monitoring Program (B2.1.20)	VII.I-9	3.3.1.58	B
Valve	PB	Cast Iron	Buried (Ext)	Loss of material	Buried Piping and Tanks Inspection (B2.1.18)	VII.G-25	3.3.1.19	B
Valve	PB	Cast Iron	Plant Indoor Air (Ext)	Loss of material	External Surfaces Monitoring Program (B2.1.20)	VII.I-8	3.3.1.58	B
Valve	PB	Cast Iron	Plant Indoor Air (Int)	Loss of material	Inspection of Internal Surfaces in Miscellaneous Piping and Ducting Components (B2.1.22)	VII.G-23	3.3.1.71	B
Valve	PB	Cast Iron	Raw Water (Int)	Loss of material	Fire Water System (B2.1.13)	VII.G-24	3.3.1.68	B
Valve	PB	Cast Iron (Gray Cast Iron)	Atmosphere/ Weather (Ext)	Loss of material	External Surfaces Monitoring Program (B2.1.20)	VII.I-9	3.3.1.58	B
Valve	PB	Cast Iron (Gray Cast Iron)	Buried (Ext)	Loss of material	Selective Leaching of Materials (B2.1.17)	VII.G-15	3.3.1.85	A

Table 3.3.2-12 Auxiliary Systems – Summary of Aging Management Evaluation – Fire Protection System (Continued)

Component Type	Intended Function	Material	Environment	Aging Effect Requiring Management	Aging Management Program	NUREG-1801 Vol. 2 Item	Table 1 Item	Notes
Valve	PB	Cast Iron (Gray Cast Iron)	Buried (Ext)	Loss of material	Buried Piping and Tanks Inspection (B2.1.18)	VII.G-25	3.3.1.19	B
Valve	PB	Cast Iron (Gray Cast Iron)	Plant Indoor Air (Ext)	Loss of material	External Surfaces Monitoring Program (B2.1.20)	VII.I-8	3.3.1.58	B
Valve	PB	Cast Iron (Gray Cast Iron)	Raw Water (Int)	Loss of material	Selective Leaching of Materials (B2.1.17)	VII.G-14	3.3.1.85	A
Valve	PB	Cast Iron (Gray Cast Iron)	Raw Water (Int)	Loss of material	Fire Water System (B2.1.13)	VII.G-24	3.3.1.68	B
Valve	PB	Copper Alloy	Atmosphere/ Weather (Ext)	Loss of material	External Surfaces Monitoring Program (B2.1.20)	None	None	G
Valve	PB	Copper Alloy	Dry Gas (Int)	None	None	VII.J-4	3.3.1.97	A
Valve	PB	Copper Alloy	Plant Indoor Air (Ext)	None	None	VIII.I-2	3.4.1.41	A
Valve	PB	Copper Alloy	Plant Indoor Air (Int)	Loss of material	Inspection of Internal Surfaces in Miscellaneous Piping and Ducting Components (B2.1.22)	VII.G-9	3.3.1.28	E
Valve	PB	Copper Alloy	Raw Water (Int)	Loss of material	Fire Water System (B2.1.13)	VII.G-12	3.3.1.70	B
Valve	PB	Copper Alloy (> 15% Zinc)	Dry Gas (Int)	None	None	VII.J-4	3.3.1.97	A
Valve	PB	Copper Alloy (> 15% Zinc)	Plant Indoor Air (Ext)	None	None	VIII.I-2	3.4.1.41	A

Table 3.3.2-12 Auxiliary Systems – Summary of Aging Management Evaluation – Fire Protection System (Continued)

Component Type	Intended Function	Material	Environment	Aging Effect Requiring Management	Aging Management Program	NUREG-1801 Vol. 2 Item	Table 1 Item	Notes
Valve	PB	Copper Alloy (> 15% Zinc)	Raw Water (Int)	Loss of material	Fire Water System (B2.1.13)	VII.G-12	3.3.1.70	B
Valve	PB	Copper Alloy (> 15% Zinc)	Raw Water (Int)	Loss of material	Selective Leaching of Materials (B2.1.17)	VII.G-13	3.3.1.84	A
Valve	PB	Ductile Iron	Buried (Ext)	Loss of material	Buried Piping and Tanks Inspection (B2.1.18)	VII.G-25	3.3.1.19	B
Valve	PB	Ductile Iron	Raw Water (Int)	Loss of material	Fire Water System (B2.1.13)	VII.G-24	3.3.1.68	B
Valve	PB	Stainless Steel	Buried (Ext)	Loss of material	Buried Piping and Tanks Inspection (B2.1.18)	VII.G-20	3.3.1.29	E
Valve	PB	Stainless Steel	Plant Indoor Air (Ext)	None	None	VII.J-15	3.3.1.94	A
Valve	PB	Stainless Steel	Raw Water (Int)	Loss of material	Fire Water System (B2.1.13)	VII.G-19	3.3.1.69	B
Vessel	PB	Carbon Steel	Atmosphere/ Weather (Ext)	Loss of material	External Surfaces Monitoring Program (B2.1.20)	VII.I-9	3.3.1.58	B
Vessel	PB	Carbon Steel	Dry Gas (Int)	None	None	VII.J-23	3.3.1.97	C

Notes for Table 3.3.2-12:

Standard Notes:

A Consistent with NUREG-1801 item for component, material, environment, and aging effect. AMP is consistent with NUREG-1801 AMP.

B Consistent with NUREG-1801 item for component, material, environment, and aging effect. AMP takes some exceptions to NUREG-1801 AMP.

C Component is different, but consistent with NUREG-1801 item for material, environment, and aging effect. AMP is consistent with NUREG-1801 AMP.

D Component is different, but consistent with NUREG-1801 item for material, environment, and aging effect. AMP takes some exceptions to NUREG-1801 AMP.
E Consistent with NUREG-1801 for material, environment, and aging effect, but a different aging management program is credited or NUREG-1801 identifies a plant-specific aging management program.
F Material not in NUREG-1801 for this component.
G Environment not in NUREG-1801 for this component and material.
H Aging effect not in NUREG-1801 for this component, material and environment combination.

Plant Specific Notes:
1 The loss of preload aging effect is not identified in NUREG-1801 for this component, material, and environment combination. Loss of preload is managed by the Bolting Integrity program (B2.1.7).
2 This line represents priming pumps associated with the portable diesel driven fire pumps that are not normally connected to the fire water system when the pumps are stored.
3 This line addresses drip pans and associated components that collect and convey leakage to the reservoir. The reactor coolant pump oil spill collection tank is evaluated in the liquid radwaste system.

Table 3.3.2-13 Auxiliary Systems – Summary of Aging Management Evaluation – Diesel Generator Fuel Oil System

Component Type	Intended Function	Material	Environment	Aging Effect Requiring Management	Aging Management Program	NUREG-1801 Vol. 2 Item	Table 1 Item	Notes
Closure Bolting	PB	Carbon Steel	Buried (Ext)	Loss of material	Buried Piping and Tanks Inspection (B2.1.18)	VII.H1-9	3.3.1.19	D
Closure Bolting	PB	Carbon Steel	Plant Indoor Air (Ext)	Loss of material	Bolting Integrity (B2.1.7)	VII.I-4	3.3.1.43	B
Closure Bolting	PB	Carbon Steel	Plant Indoor Air (Ext)	Loss of preload	Bolting Integrity (B2.1.7)	VII.I-5	3.3.1.45	B
Closure Bolting	PB	Stainless Steel	Plant Indoor Air (Ext)	Loss of preload	Bolting Integrity (B2.1.7)	None	None	H, 1
Closure Bolting	PB	Stainless Steel	Plant Indoor Air (Ext)	None	None	VII.J-15	3.3.1.94	C
Expansion Joint	PB	Stainless Steel	Fuel Oil (Int)	Loss of material	Fuel Oil Chemistry (B2.1.14) and One-Time Inspection (B2.1.16)	VII.H1-6	3.3.1.32	B
Expansion Joint	PB	Stainless Steel	Plant Indoor Air (Ext)	None	None	VII.J-15	3.3.1.94	A
Filter	PB	Carbon Steel	Fuel Oil (Int)	Loss of material	Fuel Oil Chemistry (B2.1.14) and One-Time Inspection (B2.1.16)	VII.H1-10	3.3.1.20	B
Filter	PB	Carbon Steel	Plant Indoor Air (Ext)	Loss of material	External Surfaces Monitoring Program (B2.1.20)	VII.I-8	3.3.1.58	B
Flexible Hoses	PB	Stainless Steel	Fuel Oil (Int)	Loss of material	Fuel Oil Chemistry (B2.1.14) and One-Time Inspection (B2.1.16)	VII.H1-6	3.3.1.32	B
Flexible Hoses	PB	Stainless Steel	Plant Indoor Air (Ext)	None	None	VII.J-15	3.3.1.94	A

Table 3.3.2-13 Auxiliary Systems – Summary of Aging Management Evaluation – Diesel Generator Fuel Oil System (Continued)

Component Type	Intended Function	Material	Environment	Aging Effect Requiring Management	Aging Management Program	NUREG-1801 Vol. 2 Item	Table 1 Item	Notes
Piping	PB	Carbon Steel	Atmosphere/ Weather (Ext)	Loss of material	External Surfaces Monitoring Program (B2.1.20)	VII.H1-8	3.3.1.60	B
Piping	PB	Carbon Steel	Buried (Ext)	Loss of material	Buried Piping and Tanks Inspection (B2.1.18)	VII.H1-9	3.3.1.19	B
Piping	PB	Carbon Steel	Fuel Oil (Ext)	Loss of material	Fuel Oil Chemistry (B2.1.14) and One-Time Inspection (B2.1.16)	VII.H1-10	3.3.1.20	B
Piping	LBS, PB, SIA	Carbon Steel	Fuel Oil (Int)	Loss of material	Fuel Oil Chemistry (B2.1.14) and One-Time Inspection (B2.1.16)	VII.H1-10	3.3.1.20	B
Piping	LBS, PB, SIA	Carbon Steel	Plant Indoor Air (Ext)	Loss of material	External Surfaces Monitoring Program (B2.1.20)	VII.I-8	3.3.1.58	B
Piping	PB	Carbon Steel	Plant Indoor Air (Int)	Loss of material	Inspection of Internal Surfaces in Miscellaneous Piping and Ducting Components (B2.1.22)	VII.H2-21	3.3.1.71	B
Pump	PB	Cast Iron	Fuel Oil (Int)	Loss of material	Fuel Oil Chemistry (B2.1.14) and One-Time Inspection (B2.1.16)	VII.H1-10	3.3.1.20	B
Pump	PB	Cast Iron	Plant Indoor Air (Ext)	Loss of material	External Surfaces Monitoring Program (B2.1.20)	VII.I-8	3.3.1.58	B

Table 3.3.2-13 Auxiliary Systems – Summary of Aging Management Evaluation – Diesel Generator Fuel Oil System (Continued)

Component Type	Intended Function	Material	Environment	Aging Effect Requiring Management	Aging Management Program	NUREG-1801 Vol. 2 Item	Table 1 Item	Notes
Strainer	FIL, PB	Carbon Steel	Fuel Oil (Int)	Loss of material	Fuel Oil Chemistry (B2.1.14) and One-Time Inspection (B2.1.16)	VII.H1-10	3.3.1.20	B
Strainer	FIL, PB	Carbon Steel	Plant Indoor Air (Ext)	Loss of material	External Surfaces Monitoring Program (B2.1.20)	VII.I-8	3.3.1.58	B
Tank	PB	Carbon Steel	Atmosphere/ Weather (Ext)	Loss of material	External Surfaces Monitoring Program (B2.1.20)	VII.H1-8	3.3.1.60	D
Tank	PB	Carbon Steel	Buried (Ext)	Loss of material	Buried Piping and Tanks Inspection (B2.1.18)	VII.H1-9	3.3.1.19	D
Tank	PB	Carbon Steel	Fuel Oil (Int)	Loss of material	Fuel Oil Chemistry (B2.1.14) and One-Time Inspection (B2.1.16)	VII.H1-10	3.3.1.20	B
Tank	PB	Carbon Steel	Plant Indoor Air (Ext)	Loss of material	External Surfaces Monitoring Program (B2.1.20)	VII.I-8	3.3.1.58	B
Tank	PB	Carbon Steel	Plant Indoor Air (Int)	Loss of material	Inspection of Internal Surfaces in Miscellaneous Piping and Ducting Components (B2.1.22)	VII.H2-21	3.3.1.71	D
Tubing	PB	Stainless Steel	Fuel Oil (Int)	Loss of material	Fuel Oil Chemistry (B2.1.14) and One-Time Inspection (B2.1.16)	VII.H1-6	3.3.1.32	B
Tubing	PB	Stainless Steel	Plant Indoor Air (Ext)	None	None	VII.J-15	3.3.1.94	A

Table 3.3.2-13 Auxiliary Systems – Summary of Aging Management Evaluation – Diesel Generator Fuel Oil System (Continued)

Component Type	Intended Function	Material	Environment	Aging Effect Requiring Management	Aging Management Program	NUREG-1801 Vol. 2 Item	Table 1 Item	Notes
Valve	PB	Aluminum	Fuel Oil (Ext)	Loss of material	Fuel Oil Chemistry (B2.1.14) and One-Time Inspection (B2.1.16)	VII.H1-1	3.3.1.32	B
Valve	PB	Aluminum	Fuel Oil (Int)	Loss of material	Fuel Oil Chemistry (B2.1.14) and One-Time Inspection (B2.1.16)	VII.H1-1	3.3.1.32	B
Valve	PB	Carbon Steel	Fuel Oil (Int)	Loss of material	Fuel Oil Chemistry (B2.1.14) and One-Time Inspection (B2.1.16)	VII.H1-10	3.3.1.20	B
Valve	PB	Carbon Steel	Plant Indoor Air (Ext)	Loss of material	External Surfaces Monitoring Program (B2.1.20)	VII.I-8	3.3.1.58	B
Valve	PB	Cast Iron	Fuel Oil (Ext)	Loss of material	Fuel Oil Chemistry (B2.1.14) and One-Time Inspection (B2.1.16)	VII.H1-10	3.3.1.20	B
Valve	PB	Cast Iron	Fuel Oil (Int)	Loss of material	Fuel Oil Chemistry (B2.1.14) and One-Time Inspection (B2.1.16)	VII.H1-10	3.3.1.20	B
Valve	LBS	Copper Alloy	Fuel Oil (Int)	Loss of material	Fuel Oil Chemistry (B2.1.14) and One-Time Inspection (B2.1.16)	VII.H2-9	3.3.1.32	B
Valve	LBS	Copper Alloy	Plant Indoor Air (Ext)	None	None	VIII.I-2	3.4.1.41	A
Valve	PB	Stainless Steel	Fuel Oil (Int)	Loss of material	Fuel Oil Chemistry (B2.1.14) and One-Time Inspection (B2.1.16)	VII.H1-6	3.3.1.32	B

Table 3.3.2-13 Auxiliary Systems – Summary of Aging Management Evaluation – Diesel Generator Fuel Oil System (Continued)

Component Type	Intended Function	Material	Environment	Aging Effect Requiring Management	Aging Management Program	NUREG-1801 Vol. 2 Item	Table 1 Item	Notes
Valve	PB	Stainless Steel	Plant Indoor Air (Ext)	None	None	VII.J-15	3.3.1.94	A

Notes for Table 3.3.2-13:

Standard Notes:

A Consistent with NUREG-1801 item for component, material, environment, and aging effect. AMP is consistent with NUREG-1801 AMP.

B Consistent with NUREG-1801 item for component, material, environment, and aging effect. AMP takes some exceptions to NUREG-1801 AMP.

C Component is different, but consistent with NUREG-1801 item for material, environment, and aging effect. AMP is consistent with NUREG-1801 AMP.

D Component is different, but consistent with NUREG-1801 item for material, environment, and aging effect. AMP takes some exceptions to NUREG-1801 AMP.

H Aging effect not in NUREG-1801 for this component, material and environment combination.

Plant Specific Notes:

1 The loss of preload aging effect is not identified in NUREG-1801 for this component, material, and environment combination. Loss of preload is managed by the Bolting Integrity program (B2.1.7).

Table 3.3.2-14 Auxiliary Systems – Summary of Aging Management Evaluation – Diesel Generator System

Component Type	Intended Function	Material	Environment	Aging Effect Requiring Management	Aging Management Program	NUREG-1801 Vol. 2 Item	Table 1 Item	Notes
Bellows	PB	Stainless Steel	Diesel Exhaust (Int)	Cracking	Inspection of Internal Surfaces in Miscellaneous Piping and Ducting Components (B2.1.22)	VII.H2-1	3.3.1.06	E
Bellows	PB	Stainless Steel	Diesel Exhaust (Int)	Loss of material	Inspection of Internal Surfaces in Miscellaneous Piping and Ducting Components (B2.1.22)	VII.H2-2	3.3.1.18	E
Bellows	PB	Stainless Steel	Plant Indoor Air (Ext)	None	None	VII.J-15	3.3.1.94	A
Closure Bolting	PB	Carbon Steel	Plant Indoor Air (Ext)	Loss of material	Bolting Integrity (B2.1.7)	VII.I-4	3.3.1.43	B
Closure Bolting	PB	Carbon Steel	Plant Indoor Air (Ext)	Loss of preload	Bolting Integrity (B2.1.7)	VII.I-5	3.3.1.45	B
Compressor	SIA	Cast Iron	Plant Indoor Air (Ext)	Loss of material	External Surfaces Monitoring Program (B2.1.20)	VII.I-8	3.3.1.58	B
Compressor	SIA	Cast Iron	Plant Indoor Air (Int)	Loss of material	Inspection of Internal Surfaces in Miscellaneous Piping and Ducting Components (B2.1.22)	VIII.G-34	3.4.1.30	D
Fan	PB	Ductile Iron	Plant Indoor Air (Ext)	Loss of material	External Surfaces Monitoring Program (B2.1.20)	VII.I-8	3.3.1.58	B

Table 3.3.2-14 Auxiliary Systems – Summary of Aging Management Evaluation – Diesel Generator System (Continued)

Component Type	Intended Function	Material	Environment	Aging Effect Requiring Management	Aging Management Program	NUREG-1801 Vol. 2 Item	Table 1 Item	Notes
Fan	PB	Ductile Iron	Plant Indoor Air (Int)	Loss of material	Inspection of Internal Surfaces in Miscellaneous Piping and Ducting Components (B2.1.22)	VII.H2-21	3.3.1.71	B
Filter	SIA	Carbon Steel	Dry Gas (Int)	None	None	VII.J-22	3.3.1.98	A
Filter	PB	Carbon Steel	Fuel Oil (Int)	Loss of material	Fuel Oil Chemistry (B2.1.14) and One-Time Inspection (B2.1.16)	VII.H2-24	3.3.1.20	B
Filter	PB	Carbon Steel	Lubricating Oil (Int)	Loss of material	Lubricating Oil Analysis (B2.1.23) and One-Time Inspection (B2.1.16)	VII.H2-20	3.3.1.14	B
Filter	PB, SIA	Carbon Steel	Plant Indoor Air (Ext)	Loss of material	External Surfaces Monitoring Program (B2.1.20)	VII.I-8	3.3.1.58	B
Filter	PB	Carbon Steel	Plant Indoor Air (Int)	Loss of material	Inspection of Internal Surfaces in Miscellaneous Piping and Ducting Components (B2.1.22)	VII.H2-21	3.3.1.71	B
Flexible Hoses	PB	Stainless Steel	Closed Cycle Cooling Water (Int)	Loss of material	Closed-Cycle Cooling Water System (B2.1.10)	VII.C2-10	3.3.1.50	B

Table 3.3.2-14 Auxiliary Systems – Summary of Aging Management Evaluation – Diesel Generator System (Continued)

Component Type	Intended Function	Material	Environment	Aging Effect Requiring Management	Aging Management Program	NUREG-1801 Vol. 2 Item	Table 1 Item	Notes
Flexible Hoses	PB	Stainless Steel	Diesel Exhaust (Int)	Cracking	Inspection of Internal Surfaces in Miscellaneous Piping and Ducting Components (B2.1.22)	VII.H2-1	3.3.1.06	E
Flexible Hoses	PB	Stainless Steel	Diesel Exhaust (Int)	Loss of material	Inspection of Internal Surfaces in Miscellaneous Piping and Ducting Components (B2.1.22)	VII.H2-2	3.3.1.18	E
Flexible Hoses	PB	Stainless Steel	Dry Gas (Int)	None	None	VII.J-18	3.3.1.98	A
Flexible Hoses	PB	Stainless Steel	Fuel Oil (Int)	Loss of material	Fuel Oil Chemistry (B2.1.14) and One-Time Inspection (B2.1.16)	VII.H2-16	3.3.1.32	B
Flexible Hoses	LBS, PB	Stainless Steel	Lubricating Oil (Int)	Loss of material	Lubricating Oil Analysis (B2.1.23) and One-Time Inspection (B2.1.16)	VII.H2-17	3.3.1.33	B
Flexible Hoses	LBS, PB	Stainless Steel	Plant Indoor Air (Ext)	None	None	VII.J-15	3.3.1.94	A
Flexible Hoses	PB	Stainless Steel	Plant Indoor Air (Int)	Loss of material	Inspection of Internal Surfaces in Miscellaneous Piping and Ducting Components (B2.1.22)	VII.F2-1	3.3.1.27	E
Gear Box	PB	Carbon Steel	Lubricating Oil (Int)	Loss of material	Lubricating Oil Analysis (B2.1.23) and One-Time Inspection (B2.1.16)	VII.H2-20	3.3.1.14	D

Table 3.3.2-14 Auxiliary Systems – Summary of Aging Management Evaluation – Diesel Generator System (Continued)

Component Type	Intended Function	Material	Environment	Aging Effect Requiring Management	Aging Management Program	NUREG-1801 Vol. 2 Item	Table 1 Item	Notes
Gear Box	PB	Carbon Steel	Plant Indoor Air (Ext)	Loss of material	External Surfaces Monitoring Program (B2.1.20)	VII.I-8	3.3.1.58	D
Heat Exchanger (DG Jacket Water)	HT, PB	Copper Alloy	Closed Cycle Cooling Water (Int)	Reduction of heat transfer	Closed-Cycle Cooling Water System (B2.1.10)	VII.C2-2	3.3.1.52	B
Heat Exchanger (DG Jacket Water)	HT, PB	Copper Alloy	Closed Cycle Cooling Water (Int)	Loss of material	Closed-Cycle Cooling Water System (B2.1.10)	VII.H2-8	3.3.1.51	D
Heat Exchanger (DG Jacket Water)	HT, PB	Copper Alloy	Plant Indoor Air (Ext)	None	None	V.F-3	3.2.1.53	C, 1
Heat Exchanger (DG Lube Oil)	PB	Carbon Steel	Lubricating Oil (Int)	Loss of material	Lubricating Oil Analysis (B2.1.23) and One-Time Inspection (B2.1.16)	VII.H2-5	3.3.1.21	B
Heat Exchanger (DG Lube Oil)	PB	Carbon Steel	Plant Indoor Air (Ext)	Loss of material	External Surfaces Monitoring Program (B2.1.20)	VII.I-8	3.3.1.58	D
Heat Exchanger (DG Lube Oil)	HT, PB	Copper Alloy	Closed Cycle Cooling Water (Int)	Reduction of heat transfer	Closed-Cycle Cooling Water System (B2.1.10)	VII.C2-2	3.3.1.52	B
Heat Exchanger (DG Lube Oil)	HT, PB	Copper Alloy	Closed Cycle Cooling Water (Int)	Loss of material	Closed-Cycle Cooling Water System (B2.1.10)	VII.H2-8	3.3.1.51	D
Heat Exchanger (DG Lube Oil)	HT, PB	Copper Alloy	Lubricating Oil (Ext)	Loss of material	Lubricating Oil Analysis (B2.1.23) and One-Time Inspection (B2.1.16)	VII.H2-10	3.3.1.26	B

Table 3.3.2-14 Auxiliary Systems – Summary of Aging Management Evaluation – Diesel Generator System (Continued)

Component Type	Intended Function	Material	Environment	Aging Effect Requiring Management	Aging Management Program	NUREG-1801 Vol. 2 Item	Table 1 Item	Notes
Heat Exchanger (DG Lube Oil)	HT, PB	Copper Alloy	Lubricating Oil (Ext)	Reduction of heat transfer	Lubricating Oil Analysis (B2.1.23) and One-Time Inspection (B2.1.16)	VIII.G-8	3.4.1.10	B
Heat Exchanger (DG Turbo Air Intercooler)	HT, PB	Copper Alloy	Closed Cycle Cooling Water (Int)	Reduction of heat transfer	Closed-Cycle Cooling Water System (B2.1.10)	VII.C2-2	3.3.1.52	B
Heat Exchanger (DG Turbo Air Intercooler)	HT, PB	Copper Alloy	Closed Cycle Cooling Water (Int)	Loss of material	Closed-Cycle Cooling Water System (B2.1.10)	VII.H2-8	3.3.1.51	D
Heat Exchanger (DG Turbo Air Intercooler)	HT, PB	Copper Alloy	Plant Indoor Air (Ext)	None	None	V.F-3	3.2.1.53	A
Heat Exchanger (DG Turbo Air Intercooler)	PB	Copper Alloy	Plant Indoor Air (Ext)	None	None	V.F-3	3.2.1.53	C
Heat Exchanger (DG Turbo Air Intercooler)	PB	Copper Alloy	Plant Indoor Air (Int)	Loss of material	Inspection of Internal Surfaces in Miscellaneous Piping and Ducting Components (B2.1.22)	VII.G-9	3.3.1.28	E
Heater	LBS	Carbon Steel	Lubricating Oil (Int)	Loss of material	Lubricating Oil Analysis (B2.1.23) and One-Time Inspection (B2.1.16)	VII.H2-20	3.3.1.14	D

Table 3.3.2-14 Auxiliary Systems – Summary of Aging Management Evaluation – Diesel Generator System (Continued)

Component Type	Intended Function	Material	Environment	Aging Effect Requiring Management	Aging Management Program	NUREG-1801 Vol. 2 Item	Table 1 Item	Notes
Heater	LBS	Carbon Steel	Plant Indoor Air (Ext)	Loss of material	External Surfaces Monitoring Program (B2.1.20)	VII.I-8	3.3.1.58	D
Lubricator	PB	Aluminum	Plant Indoor Air (Ext)	None	None	V.F-2	3.2.1.50	C
Lubricator	PB	Aluminum	Plant Indoor Air (Int)	Loss of material	Inspection of Internal Surfaces in Miscellaneous Piping and Ducting Components (B2.1.22)	VII.F2-12	3.3.1.27	E
Orifice	PB, TH	Stainless Steel	Closed Cycle Cooling Water (Int)	Loss of material	Closed-Cycle Cooling Water System (B2.1.10)	VII.C2-10	3.3.1.50	B
Orifice	PB, TH	Stainless Steel	Fuel Oil (Int)	Loss of material	Fuel Oil Chemistry (B2.1.14) and One-Time Inspection (B2.1.16)	VII.H2-16	3.3.1.32	B
Orifice	PB, TH	Stainless Steel	Plant Indoor Air (Ext)	None	None	VII.J-15	3.3.1.94	A
Piping	PB	Carbon Steel	Closed Cycle Cooling Water (Int)	Loss of material	Closed-Cycle Cooling Water System (B2.1.10)	VII.H2-23	3.3.1.47	B
Piping	LBS, PB	Carbon Steel	Diesel Exhaust (Int)	Loss of material	Inspection of Internal Surfaces in Miscellaneous Piping and Ducting Components (B2.1.22)	VII.H2-2	3.3.1.18	E
Piping	PB	Carbon Steel	Dry Gas (Int)	None	None	VII.J-22	3.3.1.98	A

Table 3.3.2-14 Auxiliary Systems – Summary of Aging Management Evaluation – Diesel Generator System (Continued)

Component Type	Intended Function	Material	Environment	Aging Effect Requiring Management	Aging Management Program	NUREG-1801 Vol. 2 Item	Table 1 Item	Notes
Piping	PB	Carbon Steel	Fuel Oil (Int)	Loss of material	Fuel Oil Chemistry (B2.1.14) and One-Time Inspection (B2.1.16)	VII.H2-24	3.3.1.20	B
Piping	PB	Carbon Steel	Lubricating Oil (Int)	Loss of material	Lubricating Oil Analysis (B2.1.23) and One-Time Inspection (B2.1.16)	VII.H2-20	3.3.1.14	B
Piping	LBS, PB	Carbon Steel	Plant Indoor Air (Ext)	Loss of material	External Surfaces Monitoring Program (B2.1.20)	VII.I-8	3.3.1.58	B
Piping	PB	Carbon Steel	Plant Indoor Air (Int)	Loss of material	Inspection of Internal Surfaces in Miscellaneous Piping and Ducting Components (B2.1.22)	VII.H2-21	3.3.1.71	B
Piping	PB	Stainless Steel	Closed Cycle Cooling Water (Int)	Loss of material	Closed-Cycle Cooling Water System (B2.1.10)	VII.C2-10	3.3.1.50	B
Piping	PB	Stainless Steel	Dry Gas (Int)	None	None	VII.J-18	3.3.1.98	A
Piping	PB	Stainless Steel	Fuel Oil (Int)	Loss of material	Fuel Oil Chemistry (B2.1.14) and One-Time Inspection (B2.1.16)	VII.H2-16	3.3.1.32	B
Piping	PB	Stainless Steel	Lubricating Oil (Int)	Loss of material	Lubricating Oil Analysis (B2.1.23) and One-Time Inspection (B2.1.16)	VII.H2-17	3.3.1.33	B
Piping	PB	Stainless Steel	Plant Indoor Air (Ext)	None	None	VII.J-15	3.3.1.94	A

Table 3.3.2-14 Auxiliary Systems – Summary of Aging Management Evaluation – Diesel Generator System (Continued)

Component Type	Intended Function	Material	Environment	Aging Effect Requiring Management	Aging Management Program	NUREG-1801 Vol. 2 Item	Table 1 Item	Notes
Piping	PB	Stainless Steel	Plant Indoor Air (Int)	Loss of material	Inspection of Internal Surfaces in Miscellaneous Piping and Ducting Components (B2.1.22)	VII.F2-1	3.3.1.27	E
Pump	PB	Cast Iron	Closed Cycle Cooling Water (Int)	Loss of material	Closed-Cycle Cooling Water System (B2.1.10)	VII.H2-23	3.3.1.47	B
Pump	LBS, PB, SIA	Cast Iron	Fuel Oil (Int)	Loss of material	Fuel Oil Chemistry (B2.1.14) and One-Time Inspection (B2.1.16)	VII.H2-24	3.3.1.20	B
Pump	LBS, PB	Cast Iron	Lubricating Oil (Int)	Loss of material	Lubricating Oil Analysis (B2.1.23) and One-Time Inspection (B2.1.16)	VII.H2-20	3.3.1.14	B
Pump	LBS, PB, SIA	Cast Iron	Plant Indoor Air (Ext)	Loss of material	External Surfaces Monitoring Program (B2.1.20)	VII.I-8	3.3.1.58	B
Pump	LBS, SIA	Polyvinyl Chloride (PVC)	Fuel Oil (Int)	None	None	None	None	F
Pump	LBS, SIA	Polyvinyl Chloride (PVC)	Plant Indoor Air (Ext)	None	None	None	None	F
Regulators	PB	Carbon Steel	Plant Indoor Air (Ext)	Loss of material	External Surfaces Monitoring Program (B2.1.20)	VII.I-8	3.3.1.58	B

Table 3.3.2-14 Auxiliary Systems – Summary of Aging Management Evaluation – Diesel Generator System (Continued)

Component Type	Intended Function	Material	Environment	Aging Effect Requiring Management	Aging Management Program	NUREG-1801 Vol. 2 Item	Table 1 Item	Notes
Regulators	PB	Carbon Steel	Plant Indoor Air (Int)	Loss of material	Inspection of Internal Surfaces in Miscellaneous Piping and Ducting Components (B2.1.22)	VII.H2-21	3.3.1.71	B
Regulators	PB	Stainless Steel	Dry Gas (Int)	None	None	VII.J-18	3.3.1.98	A
Regulators	PB	Stainless Steel	Plant Indoor Air (Ext)	None	None	VII.J-15	3.3.1.94	A
Regulators	PB	Stainless Steel	Plant Indoor Air (Int)	Loss of material	Inspection of Internal Surfaces in Miscellaneous Piping and Ducting Components (B2.1.22)	VII.F2-1	3.3.1.27	E
Sight Gauge	PB	Cast Iron	Fuel Oil (Int)	Loss of material	Fuel Oil Chemistry (B2.1.14) and One-Time Inspection (B2.1.16)	VII.H2-24	3.3.1.20	B
Sight Gauge	PB	Cast Iron	Plant Indoor Air (Ext)	Loss of material	External Surfaces Monitoring Program (B2.1.20)	VII.I-8	3.3.1.58	B
Sight Gauge	PB	Glass	Closed Cycle Cooling Water (Int)	None	None	VII.J-13	3.3.1.93	A
Sight Gauge	PB	Glass	Fuel Oil (Int)	None	None	VII.J-9	3.3.1.93	A
Sight Gauge	PB	Glass	Plant Indoor Air (Ext)	None	None	VII.J-8	3.3.1.93	A
Sight Gauge	PB	Stainless Steel	Closed Cycle Cooling Water (Int)	Loss of material	Closed-Cycle Cooling Water System (B2.1.10)	VII.C2-10	3.3.1.50	B

Table 3.3.2-14 Auxiliary Systems – Summary of Aging Management Evaluation – Diesel Generator System (Continued)

Component Type	Intended Function	Material	Environment	Aging Effect Requiring Management	Aging Management Program	NUREG-1801 Vol. 2 Item	Table 1 Item	Notes
Sight Gauge	PB	Stainless Steel	Fuel Oil (Int)	Loss of material	Fuel Oil Chemistry (B2.1.14) and One-Time Inspection (B2.1.16)	VII.H2-16	3.3.1.32	B
Sight Gauge	PB	Stainless Steel	Plant Indoor Air (Ext)	None	None	VII.J-15	3.3.1.94	A
Silencer	PB	Carbon Steel	Plant Indoor Air (Ext)	Loss of material	External Surfaces Monitoring Program (B2.1.20)	VII.I-8	3.3.1.58	B
Silencer	PB	Carbon Steel	Plant Indoor Air (Int)	Loss of material	Inspection of Internal Surfaces in Miscellaneous Piping and Ducting Components (B2.1.22)	VII.H2-21	3.3.1.71	B
Solenoid Valve	PB	Aluminum	Dry Gas (Int)	None	None	VII.J-2	3.3.1.97	A
Solenoid Valve	PB	Aluminum	Plant Indoor Air (Ext)	None	None	V.F-2	3.2.1.50	A
Solenoid Valve	PB	Carbon Steel	Dry Gas (Int)	None	None	VII.J-22	3.3.1.98	A
Solenoid Valve	PB	Carbon Steel	Plant Indoor Air (Ext)	Loss of material	External Surfaces Monitoring Program (B2.1.20)	VII.I-8	3.3.1.58	B
Solenoid Valve	PB	Copper Alloy	Dry Gas (Int)	None	None	VII.J-3	3.3.1.98	A
Solenoid Valve	PB	Copper Alloy	Fuel Oil (Int)	Loss of material	Fuel Oil Chemistry (B2.1.14) and One-Time Inspection (B2.1.16)	VII.H2-9	3.3.1.32	B
Solenoid Valve	PB	Copper Alloy	Plant Indoor Air (Ext)	None	None	V.F-3	3.2.1.53	A

Table 3.3.2-14 Auxiliary Systems – Summary of Aging Management Evaluation – Diesel Generator System (Continued)

Component Type	Intended Function	Material	Environment	Aging Effect Requiring Management	Aging Management Program	NUREG-1801 Vol. 2 Item	Table 1 Item	Notes
Sprinkler Head	PB	Copper Alloy	Dry Gas (Int)	None	None	VII.J-3	3.3.1.98	A
Sprinkler Head	PB	Copper Alloy	Plant Indoor Air (Ext)	None	None	V.F-3	3.2.1.53	A
Strainer	PB	Carbon Steel	Dry Gas (Int)	None	None	VII.J-22	3.3.1.98	A
Strainer	PB	Carbon Steel	Plant Indoor Air (Ext)	Loss of material	External Surfaces Monitoring Program (B2.1.20)	VII.I-8	3.3.1.58	B
Strainer	FIL	Stainless Steel	Dry Gas (Ext)	None	None	VII.J-18	3.3.1.98	A
Strainer	FIL, PB	Stainless Steel	Dry Gas (Int)	None	None	VII.J-18	3.3.1.98	A
Strainer	FIL, PB	Stainless Steel	Lubricating Oil (Int)	Loss of material	Lubricating Oil Analysis (B2.1.23) and One-Time Inspection (B2.1.16)	VII.H2-17	3.3.1.33	B
Strainer	FIL, PB	Stainless Steel	Plant Indoor Air (Ext)	None	None	VII.J-15	3.3.1.94	A
Tank	PB	Carbon Steel	Closed Cycle Cooling Water (Int)	Loss of material	Closed-Cycle Cooling Water System (B2.1.10)	VII.H2-23	3.3.1.47	D
Tank	PB	Carbon Steel	Dry Gas (Int)	None	None	VII.J-22	3.3.1.98	C
Tank	PB	Carbon Steel	Fuel Oil (Int)	Loss of material	Fuel Oil Chemistry (B2.1.14) and One-Time Inspection (B2.1.16)	VII.H2-24	3.3.1.20	B
Tank	PB	Carbon Steel	Plant Indoor Air (Ext)	Loss of material	External Surfaces Monitoring Program (B2.1.20)	VII.I-8	3.3.1.58	B

Table 3.3.2-14 Auxiliary Systems – Summary of Aging Management Evaluation – Diesel Generator System (Continued)

Component Type	Intended Function	Material	Environment	Aging Effect Requiring Management	Aging Management Program	NUREG-1801 Vol. 2 Item	Table 1 Item	Notes
Tank	PB	Carbon Steel	Plant Indoor Air (Int)	Loss of material	Inspection of Internal Surfaces in Miscellaneous Piping and Ducting Components (B2.1.22)	VII.H2-21	3.3.1.71	B
Thermowell	PB	Carbon Steel	Lubricating Oil (Int)	Loss of material	Lubricating Oil Analysis (B2.1.23) and One-Time Inspection (B2.1.16)	VII.H2-20	3.3.1.14	B
Thermowell	PB	Carbon Steel	Plant Indoor Air (Ext)	Loss of material	External Surfaces Monitoring Program (B2.1.20)	VII.I-8	3.3.1.58	B
Thermowell	PB	Copper Alloy	Closed Cycle Cooling Water (Int)	Loss of material	Closed-Cycle Cooling Water System (B2.1.10)	VII.H2-8	3.3.1.51	B
Thermowell	PB	Copper Alloy	Lubricating Oil (Int)	Loss of material	Lubricating Oil Analysis (B2.1.23) and One-Time Inspection (B2.1.16)	VII.H2-10	3.3.1.26	B
Thermowell	PB	Copper Alloy	Plant Indoor Air (Ext)	None	None	V.F-3	3.2.1.53	A
Thermowell	PB	Stainless Steel	Closed Cycle Cooling Water (Int)	Loss of material	Closed-Cycle Cooling Water System (B2.1.10)	VII.C2-10	3.3.1.50	B
Thermowell	PB	Stainless Steel	Plant Indoor Air (Ext)	None	None	VII.J-15	3.3.1.94	A
Tubing	PB	Stainless Steel	Closed Cycle Cooling Water (Int)	Loss of material	Closed-Cycle Cooling Water System (B2.1.10)	VII.C2-10	3.3.1.50	B
Tubing	PB	Stainless Steel	Dry Gas (Int)	None	None	VII.J-18	3.3.1.98	A

Table 3.3.2-14 Auxiliary Systems – Summary of Aging Management Evaluation – Diesel Generator System (Continued)

Component Type	Intended Function	Material	Environment	Aging Effect Requiring Management	Aging Management Program	NUREG-1801 Vol. 2 Item	Table 1 Item	Notes
Tubing	PB	Stainless Steel	Fuel Oil (Int)	Loss of material	Fuel Oil Chemistry (B2.1.14) and One-Time Inspection (B2.1.16)	VII.H2-16	3.3.1.32	B
Tubing	PB	Stainless Steel	Lubricating Oil (Int)	Loss of material	Lubricating Oil Analysis (B2.1.23) and One-Time Inspection (B2.1.16)	VII.H2-17	3.3.1.33	B
Tubing	PB	Stainless Steel	Plant Indoor Air (Ext)	None	None	VII.J-15	3.3.1.94	A
Tubing	PB	Stainless Steel	Plant Indoor Air (Int)	Loss of material	Inspection of Internal Surfaces in Miscellaneous Piping and Ducting Components (B2.1.22)	VII.F2-1	3.3.1.27	E
Turbine	PB	Carbon Steel	Diesel Exhaust (Int)	Loss of material	Inspection of Internal Surfaces in Miscellaneous Piping and Ducting Components (B2.1.22)	VII.H2-2	3.3.1.18	E
Turbine	PB	Carbon Steel	Plant Indoor Air (Ext)	Loss of material	External Surfaces Monitoring Program (B2.1.20)	VII.I-8	3.3.1.58	B
Valve	PB	Aluminum	Fuel Oil (Ext)	Loss of material	Fuel Oil Chemistry (B2.1.14) and One-Time Inspection (B2.1.16)	VII.H2-7	3.3.1.32	B
Valve	PB	Aluminum	Fuel Oil (Int)	Loss of material	Fuel Oil Chemistry (B2.1.14) and One-Time Inspection (B2.1.16)	VII.H2-7	3.3.1.32	B

Table 3.3.2-14 Auxiliary Systems – Summary of Aging Management Evaluation – Diesel Generator System (Continued)

Component Type	Intended Function	Material	Environment	Aging Effect Requiring Management	Aging Management Program	NUREG-1801 Vol. 2 Item	Table 1 Item	Notes
Valve	PB	Carbon Steel	Closed Cycle Cooling Water (Int)	Loss of material	Closed-Cycle Cooling Water System (B2.1.10)	VII.H2-23	3.3.1.47	B
Valve	PB	Carbon Steel	Dry Gas (Int)	None	None	VII.J-22	3.3.1.98	A
Valve	LBS, PB	Carbon Steel	Fuel Oil (Int)	Loss of material	Fuel Oil Chemistry (B2.1.14) and One-Time Inspection (B2.1.16)	VII.H2-24	3.3.1.20	B
Valve	LBS, PB	Carbon Steel	Lubricating Oil (Int)	Loss of material	Lubricating Oil Analysis (B2.1.23) and One-Time Inspection (B2.1.16)	VII.H2-20	3.3.1.14	B
Valve	LBS, PB	Carbon Steel	Plant Indoor Air (Ext)	Loss of material	External Surfaces Monitoring Program (B2.1.20)	VII.I-8	3.3.1.58	B
Valve	PB	Carbon Steel	Plant Indoor Air (Int)	Loss of material	Inspection of Internal Surfaces in Miscellaneous Piping and Ducting Components (B2.1.22)	VII.H2-21	3.3.1.71	B
Valve	PB	Cast Iron	Closed Cycle Cooling Water (Int)	Loss of material	Closed-Cycle Cooling Water System (B2.1.10)	VII.H2-23	3.3.1.47	B
Valve	PB	Cast Iron	Fuel Oil (Int)	Loss of material	Fuel Oil Chemistry (B2.1.14) and One-Time Inspection (B2.1.16)	VII.H2-24	3.3.1.20	B
Valve	PB	Cast Iron	Lubricating Oil (Int)	Loss of material	Lubricating Oil Analysis (B2.1.23) and One-Time Inspection (B2.1.16)	VII.H2-20	3.3.1.14	B

Table 3.3.2-14 Auxiliary Systems – Summary of Aging Management Evaluation – Diesel Generator System (Continued)

Component Type	Intended Function	Material	Environment	Aging Effect Requiring Management	Aging Management Program	NUREG-1801 Vol. 2 Item	Table 1 Item	Notes
Valve	PB	Cast Iron	Plant Indoor Air (Ext)	Loss of material	External Surfaces Monitoring Program (B2.1.20)	VII.I-8	3.3.1.58	B
Valve	PB	Cast Iron	Plant Indoor Air (Int)	Loss of material	Inspection of Internal Surfaces in Miscellaneous Piping and Ducting Components (B2.1.22)	VII.H2-21	3.3.1.71	B
Valve	PB	Copper Alloy	Closed Cycle Cooling Water (Int)	Loss of material	Closed-Cycle Cooling Water System (B2.1.10)	VII.H2-8	3.3.1.51	B
Valve	PB	Copper Alloy	Dry Gas (Int)	None	None	VII.J-3	3.3.1.98	A
Valve	PB	Copper Alloy	Fuel Oil (Int)	Loss of material	Fuel Oil Chemistry (B2.1.14) and One-Time Inspection (B2.1.16)	VII.H2-9	3.3.1.32	B
Valve	PB	Copper Alloy	Lubricating Oil (Int)	Loss of material	Lubricating Oil Analysis (B2.1.23) and One-Time Inspection (B2.1.16)	VII.H2-10	3.3.1.26	B
Valve	PB	Copper Alloy	Plant Indoor Air (Ext)	None	None	V.F-3	3.2.1.53	A
Valve	PB	Copper Alloy	Plant Indoor Air (Int)	Loss of material	Inspection of Internal Surfaces in Miscellaneous Piping and Ducting Components (B2.1.22)	VII.G-9	3.3.1.28	E
Valve	LBS, PB	Stainless Steel	Closed Cycle Cooling Water (Int)	Loss of material	Closed-Cycle Cooling Water System (B2.1.10)	VII.C2-10	3.3.1.50	B

Table 3.3.2-14 Auxiliary Systems – Summary of Aging Management Evaluation – Diesel Generator System (Continued)

Component Type	Intended Function	Material	Environment	Aging Effect Requiring Management	Aging Management Program	NUREG-1801 Vol. 2 Item	Table 1 Item	Notes
Valve	PB	Stainless Steel	Dry Gas (Int)	None	None	VII.J-18	3.3.1.98	A
Valve	LBS, PB	Stainless Steel	Fuel Oil (Int)	Loss of material	Fuel Oil Chemistry (B2.1.14) and One-Time Inspection (B2.1.16)	VII.H2-16	3.3.1.32	B
Valve	PB	Stainless Steel	Lubricating Oil (Ext)	Loss of material	Lubricating Oil Analysis (B2.1.23) and One-Time Inspection (B2.1.16)	VII.H2-17	3.3.1.33	B
Valve	LBS, PB	Stainless Steel	Lubricating Oil (Int)	Loss of material	Lubricating Oil Analysis (B2.1.23) and One-Time Inspection (B2.1.16)	VII.H2-17	3.3.1.33	B
Valve	LBS, PB	Stainless Steel	Plant Indoor Air (Ext)	None	None	VII.J-15	3.3.1.94	A
Valve	PB	Stainless Steel	Plant Indoor Air (Int)	Loss of material	Inspection of Internal Surfaces in Miscellaneous Piping and Ducting Components (B2.1.22)	VII.F2-1	3.3.1.27	E

Notes for Table 3.3.2-14:

Standard Notes:

A Consistent with NUREG-1801 item for component, material, environment, and aging effect. AMP is consistent with NUREG-1801 AMP.

B Consistent with NUREG-1801 item for component, material, environment, and aging effect. AMP takes some exceptions to NUREG-1801 AMP.

C Component is different, but consistent with NUREG-1801 item for material, environment, and aging effect. AMP is consistent with NUREG-1801 AMP.

D Component is different, but consistent with NUREG-1801 item for material, environment, and aging effect. AMP takes some exceptions to NUREG-1801 AMP.
E Consistent with NUREG-1801 for material, environment, and aging effect, but a different aging management program is credited or NUREG-1801 identifies a plant-specific aging management program.
F Material not in NUREG-1801 for this component.

Plant Specific Notes:

1 Material is not anticipated to experience reduction of heat transfer because it is maintained and monitored during surveillance testing.

Table 3.3.2-15 Auxiliary Systems – Summary of Aging Management Evaluation – Lube Oil System

Component Type	Intended Function	Material	Environment	Aging Effect Requiring Management	Aging Management Program	NUREG-1801 Vol. 2 Item	Table 1 Item	Notes
Closure Bolting	PB	Carbon Steel	Plant Indoor Air (Ext)	Loss of material	Bolting Integrity (B2.1.7)	VII.I-4	3.3.1.43	B
Closure Bolting	PB	Carbon Steel	Plant Indoor Air (Ext)	Loss of preload	Bolting Integrity (B2.1.7)	VII.I-5	3.3.1.45	B
Closure Bolting	PB	Stainless Steel	Plant Indoor Air (Ext)	Loss of preload	Bolting Integrity (B2.1.7)	None	None	H, 1
Closure Bolting	PB	Stainless Steel	Plant Indoor Air (Ext)	None	None	VII.J-15	3.3.1.94	C
Filter	FIL, PB	Aluminum	Lubricating Oil (Ext)	Loss of material	Lubricating Oil Analysis (B2.1.23) and One-Time Inspection (B2.1.16)	None	None	G
Filter	FIL, PB	Aluminum	Lubricating Oil (Int)	Loss of material	Lubricating Oil Analysis (B2.1.23) and One-Time Inspection (B2.1.16)	None	None	G
Filter	FIL, PB	Carbon Steel	Lubricating Oil (Ext)	Loss of material	Lubricating Oil Analysis (B2.1.23) and One-Time Inspection (B2.1.16)	VII.H2-20	3.3.1.14	B
Filter	FIL, PB	Carbon Steel	Lubricating Oil (Int)	Loss of material	Lubricating Oil Analysis (B2.1.23) and One-Time Inspection (B2.1.16)	VII.H2-20	3.3.1.14	B
Flow Indicator	PB	Copper Alloy	Lubricating Oil (Int)	Loss of material	Lubricating Oil Analysis (B2.1.23) and One-Time Inspection (B2.1.16)	VII.H2-10	3.3.1.26	B
Flow Indicator	PB	Copper Alloy	Plant Indoor Air (Ext)	None	None	VIII.I-2	3.4.1.41	A
Flow Indicator	PB	Glass	Lubricating Oil (Int)	None	None	VII.J-10	3.3.1.93	A

Table 3.3.2-15 Auxiliary Systems – Summary of Aging Management Evaluation – Lube Oil System (Continued)

Component Type	Intended Function	Material	Environment	Aging Effect Requiring Management	Aging Management Program	NUREG-1801 Vol. 2 Item	Table 1 Item	Notes
Flow Indicator	PB	Glass	Plant Indoor Air (Ext)	None	None	VII.J-8	3.3.1.93	A
Piping	PB	Copper Alloy	Lubricating Oil (Int)	Loss of material	Lubricating Oil Analysis (B2.1.23) and One-Time Inspection (B2.1.16)	VII.H2-10	3.3.1.26	B
Piping	PB	Copper Alloy	Plant Indoor Air (Ext)	None	None	VIII.I-2	3.4.1.41	A
Piping	PB	Glass	Lubricating Oil (Int)	None	None	VII.J-10	3.3.1.93	A
Piping	PB	Glass	Plant Indoor Air (Ext)	None	None	VII.J-8	3.3.1.93	A
Piping	PB	Stainless Steel	Lubricating Oil (Int)	Loss of material	Lubricating Oil Analysis (B2.1.23) and One-Time Inspection (B2.1.16)	VII.H2-17	3.3.1.33	B
Piping	PB	Stainless Steel	Plant Indoor Air (Ext)	None	None	VII.J-15	3.3.1.94	A
Pump	PB	Carbon Steel	Lubricating Oil (Int)	Loss of material	Lubricating Oil Analysis (B2.1.23) and One-Time Inspection (B2.1.16)	VII.H2-20	3.3.1.14	B
Pump	PB	Carbon Steel	Plant Indoor Air (Ext)	Loss of material	External Surfaces Monitoring Program (B2.1.20)	VII.I-8	3.3.1.58	B
Pump	PB	Stainless Steel	Lubricating Oil (Int)	Loss of material	Lubricating Oil Analysis (B2.1.23) and One-Time Inspection (B2.1.16)	VII.H2-17	3.3.1.33	B
Pump	PB	Stainless Steel	Plant Indoor Air (Ext)	None	None	VIII.I-10	3.4.1.41	A

Table 3.3.2-15 Auxiliary Systems – Summary of Aging Management Evaluation – Lube Oil System (Continued)

Component Type	Intended Function	Material	Environment	Aging Effect Requiring Management	Aging Management Program	NUREG-1801 Vol. 2 Item	Table 1 Item	Notes
Sight Gauge	PB	Copper Alloy	Lubricating Oil (Int)	Loss of material	Lubricating Oil Analysis (B2.1.23) and One-Time Inspection (B2.1.16)	VII.H2-10	3.3.1.26	B
Sight Gauge	PB	Copper Alloy	Plant Indoor Air (Ext)	None	None	VIII.I-2	3.4.1.41	A
Sight Gauge	PB	Glass	Lubricating Oil (Int)	None	None	VII.J-10	3.3.1.93	A
Sight Gauge	PB	Glass	Plant Indoor Air (Ext)	None	None	VII.J-8	3.3.1.93	A
Tank	PB	Carbon Steel	Lubricating Oil (Int)	Loss of material	Lubricating Oil Analysis (B2.1.23) and One-Time Inspection (B2.1.16)	VII.H2-20	3.3.1.14	B
Tank	PB	Carbon Steel	Plant Indoor Air (Ext)	Loss of material	External Surfaces Monitoring Program (B2.1.20)	VII.I-8	3.3.1.58	B
Valve	PB	Copper Alloy	Lubricating Oil (Int)	Loss of material	Lubricating Oil Analysis (B2.1.23) and One-Time Inspection (B2.1.16)	VII.H2-10	3.3.1.26	B
Valve	PB	Copper Alloy	Plant Indoor Air (Ext)	None	None	VIII.I-2	3.4.1.41	A
Valve	PB	Stainless Steel	Lubricating Oil (Int)	Loss of material	Lubricating Oil Analysis (B2.1.23) and One-Time Inspection (B2.1.16)	VII.H2-17	3.3.1.33	B
Valve	PB	Stainless Steel	Plant Indoor Air (Ext)	None	None	VII.J-15	3.3.1.94	A

Notes for Table 3.3.2-15:

Standard Notes:

A Consistent with NUREG-1801 item for component, material, environment, and aging effect. AMP is consistent with NUREG-1801 AMP.

B Consistent with NUREG-1801 item for component, material, environment, and aging effect. AMP takes some exceptions to NUREG-1801 AMP.

C Component is different, but consistent with NUREG-1801 item for material, environment, and aging effect. AMP is consistent with NUREG-1801 AMP.

G Environment not in NUREG-1801 for this component and material.

H Aging effect not in NUREG-1801 for this component, material and environment combination.

Plant Specific Notes:

1 The loss of preload aging effect is not identified in NUREG-1801 for this component, material, and environment combination. Loss of preload is managed by the Bolting Integrity program (B2.1.7).

Table 3.3.2-16 Auxiliary Systems – Summary of Aging Management Evaluation – Gaseous Radwaste System

Component Type	Intended Function	Material	Environment	Aging Effect Requiring Management	Aging Management Program	NUREG-1801 Vol. 2 Item	Table 1 Item	Notes
Closure Bolting	LBS, PB, SS	Carbon Steel	Plant Indoor Air (Ext)	Loss of material	Bolting Integrity (B2.1.7)	VII.I-4	3.3.1.43	B
Closure Bolting	LBS, PB, SS	Carbon Steel	Plant Indoor Air (Ext)	Loss of preload	Bolting Integrity (B2.1.7)	VII.I-5	3.3.1.45	B
Closure Bolting	LBS, PB, SS	Stainless Steel	Plant Indoor Air (Ext)	Loss of preload	Bolting Integrity (B2.1.7)	None	None	H, 1
Closure Bolting	LBS, PB, SS	Stainless Steel	Plant Indoor Air (Ext)	None	None	VII.J-15	3.3.1.94	C
Compressor	LBS, SS	Cast Iron	Plant Indoor Air (Ext)	Loss of material	External Surfaces Monitoring Program (B2.1.20)	VII.I-8	3.3.1.58	B
Compressor	LBS, SS	Cast Iron	Plant Indoor Air (Int)	Loss of material	Inspection of Internal Surfaces in Miscellaneous Piping and Ducting Components (B2.1.22)	VII.G-23	3.3.1.71	B
Compressor	LBS, SS	Cast Iron	Raw Water (Int)	Loss of material	Inspection of Internal Surfaces in Miscellaneous Piping and Ducting Components (B2.1.22)	VII.C1-19	3.3.1.76	E, 3
Heat Exchanger (Waste Gas Compressor Seal Cooler)	LBS, SIA	Carbon Steel	Closed Cycle Cooling Water (Int)	Loss of material	Closed-Cycle Cooling Water System (B2.1.10)	VII.C2-1	3.3.1.48	B

Table 3.3.2-16 Auxiliary Systems – Summary of Aging Management Evaluation – Gaseous Radwaste System (Continued)

Component Type	Intended Function	Material	Environment	Aging Effect Requiring Management	Aging Management Program	NUREG-1801 Vol. 2 Item	Table 1 Item	Notes
Heat Exchanger (Waste Gas Compressor Seal Cooler)	LBS, SIA	Carbon Steel	Plant Indoor Air (Ext)	Loss of material	External Surfaces Monitoring Program (B2.1.20)	VII.I-8	3.3.1.58	B
Heat Exchanger (Waste Gas Compressor Seal Cooler)	LBS, SIA	Carbon Steel	Raw Water (Int)	Loss of material	Inspection of Internal Surfaces in Miscellaneous Piping and Ducting Components (B2.1.22)	VII.C1-9	3.3.1.81	E, 3
Heat Exchanger (Waste Gas Compressor Seal Cooler)	LBS, SIA	Copper Alloy (> 15% Zinc)	Closed Cycle Cooling Water (Int)	Loss of material	Closed-Cycle Cooling Water System (B2.1.10)	VII.C2-4	3.3.1.51	B, 2
Heat Exchanger (Waste Gas Compressor Seal Cooler)	LBS, SIA	Copper Alloy (> 15% Zinc)	Raw Water (Ext)	Loss of material	Inspection of Internal Surfaces in Miscellaneous Piping and Ducting Components (B2.1.22)	VII.C1-19	3.3.1.76	E, 3
Instrument (Chamber)	LBS	Carbon Steel	Plant Indoor Air (Ext)	Loss of material	External Surfaces Monitoring Program (B2.1.20)	VII.I-8	3.3.1.58	B

Table 3.3.2-16 Auxiliary Systems – Summary of Aging Management Evaluation – Gaseous Radwaste System (Continued)

Component Type	Intended Function	Material	Environment	Aging Effect Requiring Management	Aging Management Program	NUREG-1801 Vol. 2 Item	Table 1 Item	Notes
Instrument (Chamber)	LBS	Carbon Steel	Raw Water (Int)	Loss of material	Inspection of Internal Surfaces in Miscellaneous Piping and Ducting Components (B2.1.22)	VII.C1-19	3.3.1.76	E, 3
Instrument Bellows	LBS, SS	Stainless Steel	Plant Indoor Air (Ext)	None	None	VII.J-15	3.3.1.94	A
Instrument Bellows	LBS, SS	Stainless Steel	Plant Indoor Air (Int)	Loss of material	Inspection of Internal Surfaces in Miscellaneous Piping and Ducting Components (B2.1.22)	V.A-26	3.2.1.08	E
Instrument Bellows	LBS	Stainless Steel	Raw Water (Int)	Loss of material	Inspection of Internal Surfaces in Miscellaneous Piping and Ducting Components (B2.1.22)	VII.C1-15	3.3.1.79	E, 3
Orifice	LBS, SIA	Stainless Steel	Closed Cycle Cooling Water (Int)	Loss of material	Closed-Cycle Cooling Water System (B2.1.10)	VII.C2-10	3.3.1.50	B
Orifice	LBS, SIA, SS	Stainless Steel	Plant Indoor Air (Ext)	None	None	VII.J-15	3.3.1.94	A
Orifice	LBS, SS	Stainless Steel	Raw Water (Int)	Loss of material	Inspection of Internal Surfaces in Miscellaneous Piping and Ducting Components (B2.1.22)	VII.C1-15	3.3.1.79	E, 3

Table 3.3.2-16 Auxiliary Systems – Summary of Aging Management Evaluation – Gaseous Radwaste System (Continued)

Component Type	Intended Function	Material	Environment	Aging Effect Requiring Management	Aging Management Program	NUREG-1801 Vol. 2 Item	Table 1 Item	Notes
Piping	LBS, SIA	Carbon Steel	Closed Cycle Cooling Water (Int)	Loss of material	Closed-Cycle Cooling Water System (B2.1.10)	VII.C2-14	3.3.1.47	B
Piping	SS	Carbon Steel	Dry Gas (Int)	None	None	VII.J-23	3.3.1.97	A
Piping	LBS, SIA, SS	Carbon Steel	Plant Indoor Air (Ext)	Loss of material	External Surfaces Monitoring Program (B2.1.20)	VII.I-8	3.3.1.58	B
Piping	LBS, SIA, SS	Carbon Steel	Plant Indoor Air (Int)	Loss of material	Inspection of Internal Surfaces in Miscellaneous Piping and Ducting Components (B2.1.22)	VII.G-23	3.3.1.71	B
Piping	LBS, SIA, SS	Carbon Steel	Raw Water (Int)	Loss of material	Inspection of Internal Surfaces in Miscellaneous Piping and Ducting Components (B2.1.22)	VII.C1-19	3.3.1.76	E, 3
Piping	SS	Stainless Steel	Dry Gas (Int)	None	None	VII.J-19	3.3.1.97	A
Piping	LBS, SIA, SS	Stainless Steel	Plant Indoor Air (Ext)	None	None	VII.J-15	3.3.1.94	A
Piping	LBS, SIA, SS	Stainless Steel	Plant Indoor Air (Int)	Loss of material	Inspection of Internal Surfaces in Miscellaneous Piping and Ducting Components (B2.1.22)	V.A-26	3.2.1.08	E

Table 3.3.2-16 Auxiliary Systems – Summary of Aging Management Evaluation – Gaseous Radwaste System (Continued)

Component Type	Intended Function	Material	Environment	Aging Effect Requiring Management	Aging Management Program	NUREG-1801 Vol. 2 Item	Table 1 Item	Notes
Piping	LBS, SS	Stainless Steel	Raw Water (Int)	Loss of material	Inspection of Internal Surfaces in Miscellaneous Piping and Ducting Components (B2.1.22)	VII.C1-15	3.3.1.79	E, 3
Sensor Element	LBS	Stainless Steel	Plant Indoor Air (Ext)	None	None	VII.J-15	3.3.1.94	A
Sensor Element	LBS	Stainless Steel	Plant Indoor Air (Int)	Loss of material	Inspection of Internal Surfaces in Miscellaneous Piping and Ducting Components (B2.1.22)	V.A-26	3.2.1.08	E
Separator	LBS	Carbon Steel	Plant Indoor Air (Ext)	Loss of material	External Surfaces Monitoring Program (B2.1.20)	VII.I-8	3.3.1.58	B
Separator	LBS	Carbon Steel	Plant Indoor Air (Int)	Loss of material	Inspection of Internal Surfaces in Miscellaneous Piping and Ducting Components (B2.1.22)	VII.G-23	3.3.1.71	B
Separator	LBS	Carbon Steel	Raw Water (Int)	Loss of material	Inspection of Internal Surfaces in Miscellaneous Piping and Ducting Components (B2.1.22)	VII.C1-19	3.3.1.76	E, 3

Table 3.3.2-16 Auxiliary Systems – Summary of Aging Management Evaluation – Gaseous Radwaste System (Continued)

Component Type	Intended Function	Material	Environment	Aging Effect Requiring Management	Aging Management Program	NUREG-1801 Vol. 2 Item	Table 1 Item	Notes
Sight Gauge	LBS	Carbon Steel	Plant Indoor Air (Ext)	Loss of material	External Surfaces Monitoring Program (B2.1.20)	VII.I-8	3.3.1.58	B
Sight Gauge	LBS	Carbon Steel	Plant Indoor Air (Int)	Loss of material	Inspection of Internal Surfaces in Miscellaneous Piping and Ducting Components (B2.1.22)	VII.G-23	3.3.1.71	B
Sight Gauge	LBS	Carbon Steel	Raw Water (Int)	Loss of material	Inspection of Internal Surfaces in Miscellaneous Piping and Ducting Components (B2.1.22)	VII.C1-19	3.3.1.76	E, 3
Sight Gauge	LBS	Glass	Plant Indoor Air (Ext)	None	None	VII.J-8	3.3.1.93	A
Sight Gauge	LBS	Glass	Plant Indoor Air (Int)	None	None	VII.J-7	3.3.1.93	A
Sight Gauge	LBS	Glass	Raw Water (Int)	None	None	VII.J-11	3.3.1.93	A
Sight Gauge	LBS	Stainless Steel	Plant Indoor Air (Ext)	None	None	VII.J-15	3.3.1.94	A
Sight Gauge	LBS	Stainless Steel	Plant Indoor Air (Int)	Loss of material	Inspection of Internal Surfaces in Miscellaneous Piping and Ducting Components (B2.1.22)	V.A-26	3.2.1.08	E

Table 3.3.2-16 Auxiliary Systems – Summary of Aging Management Evaluation – Gaseous Radwaste System (Continued)

Component Type	Intended Function	Material	Environment	Aging Effect Requiring Management	Aging Management Program	NUREG-1801 Vol. 2 Item	Table 1 Item	Notes
Strainer	LBS	Carbon Steel	Plant Indoor Air (Ext)	Loss of material	External Surfaces Monitoring Program (B2.1.20)	VII.I-8	3.3.1.58	B
Strainer	LBS	Carbon Steel	Raw Water (Int)	Loss of material	Inspection of Internal Surfaces in Miscellaneous Piping and Ducting Components (B2.1.22)	VII.C1-19	3.3.1.76	E, 3
Tank	SS	Carbon Steel	Dry Gas (Int)	None	None	VII.J-23	3.3.1.97	A
Tank	LBS, SIA, SS	Carbon Steel	Plant Indoor Air (Ext)	Loss of material	External Surfaces Monitoring Program (B2.1.20)	VII.I-8	3.3.1.58	B
Tank	LBS, SIA	Carbon Steel	Plant Indoor Air (Int)	Loss of material	Inspection of Internal Surfaces in Miscellaneous Piping and Ducting Components (B2.1.22)	VII.G-23	3.3.1.71	B
Tank	LBS, SIA, SS	Carbon Steel	Raw Water (Int)	Loss of material	Inspection of Internal Surfaces in Miscellaneous Piping and Ducting Components (B2.1.22)	VII.C1-19	3.3.1.76	E, 3
Test Connection	LBS	Carbon Steel	Plant Indoor Air (Ext)	Loss of material	External Surfaces Monitoring Program (B2.1.20)	VII.I-8	3.3.1.58	B

Table 3.3.2-16 Auxiliary Systems – Summary of Aging Management Evaluation – Gaseous Radwaste System (Continued)

Component Type	Intended Function	Material	Environment	Aging Effect Requiring Management	Aging Management Program	NUREG-1801 Vol. 2 Item	Table 1 Item	Notes
Test Connection	LBS	Carbon Steel	Plant Indoor Air (Int)	Loss of material	Inspection of Internal Surfaces in Miscellaneous Piping and Ducting Components (B2.1.22)	VII.G-23	3.3.1.71	B
Tubing	LBS, SS	Stainless Steel	Plant Indoor Air (Ext)	None	None	VII.J-15	3.3.1.94	A
Tubing	LBS, SS	Stainless Steel	Plant Indoor Air (Int)	Loss of material	Inspection of Internal Surfaces in Miscellaneous Piping and Ducting Components (B2.1.22)	V.A-26	3.2.1.08	E
Tubing	LBS, SS	Stainless Steel	Raw Water (Int)	Loss of material	Inspection of Internal Surfaces in Miscellaneous Piping and Ducting Components (B2.1.22)	VII.C1-15	3.3.1.79	E, 3
Valve	LBS, SIA	Carbon Steel	Closed Cycle Cooling Water (Int)	Loss of material	Closed-Cycle Cooling Water System (B2.1.10)	VII.C2-14	3.3.1.47	B
Valve	LBS, SS	Carbon Steel	Dry Gas (Int)	None	None	VII.J-23	3.3.1.97	A
Valve	LBS, SIA, SS	Carbon Steel	Plant Indoor Air (Ext)	Loss of material	External Surfaces Monitoring Program (B2.1.20)	VII.I-8	3.3.1.58	B

Table 3.3.2-16 Auxiliary Systems – Summary of Aging Management Evaluation – Gaseous Radwaste System (Continued)

Component Type	Intended Function	Material	Environment	Aging Effect Requiring Management	Aging Management Program	NUREG-1801 Vol. 2 Item	Table 1 Item	Notes
Valve	LBS, SIA, SS	Carbon Steel	Plant Indoor Air (Int)	Loss of material	Inspection of Internal Surfaces in Miscellaneous Piping and Ducting Components (B2.1.22)	VII.G-23	3.3.1.71	B
Valve	LBS, SS	Carbon Steel	Raw Water (Int)	Loss of material	Inspection of Internal Surfaces in Miscellaneous Piping and Ducting Components (B2.1.22)	VII.C1-19	3.3.1.76	E, 3
Valve	LBS, SS	Copper Alloy (> 15% Zinc)	Plant Indoor Air (Ext)	None	None	VIII.I-2	3.4.1.41	A
Valve	LBS	Copper Alloy (> 15% Zinc)	Plant Indoor Air (Int)	Loss of material	Selective Leaching of Materials (B2.1.17)	None	None	G, 4
Valve	LBS, SS	Copper Alloy (> 15% Zinc)	Raw Water (Int)	Loss of material	Selective Leaching of Materials (B2.1.17)	VII.C1-10	3.3.1.84	A
Valve	PB	Stainless Steel	Closed Cycle Cooling Water (Int)	Loss of material	Closed-Cycle Cooling Water System (B2.1.10)	VII.C2-10	3.3.1.50	B
Valve	SIA, SS	Stainless Steel	Dry Gas (Int)	None	None	VII.J-19	3.3.1.97	A
Valve	LBS, PB, SIA, SS	Stainless Steel	Plant Indoor Air (Ext)	None	None	VII.J-15	3.3.1.94	A
Valve	LBS, SIA, SS	Stainless Steel	Plant Indoor Air (Int)	Loss of material	Inspection of Internal Surfaces in Miscellaneous Piping and Ducting Components (B2.1.22)	V.A-26	3.2.1.08	E

Table 3.3.2-16 Auxiliary Systems – Summary of Aging Management Evaluation – Gaseous Radwaste System (Continued)

Component Type	Intended Function	Material	Environment	Aging Effect Requiring Management	Aging Management Program	NUREG-1801 Vol. 2 Item	Table 1 Item	Notes
Valve	LBS, SS	Stainless Steel	Raw Water (Int)	Loss of material	Inspection of Internal Surfaces in Miscellaneous Piping and Ducting Components (B2.1.22)	VII.C1-15	3.3.1.79	E, 3
Valve	LBS, SS	Stainless Steel Cast Austenitic	Plant Indoor Air (Ext)	None	None	VII.J-15	3.3.1.94	A
Valve	LBS, SS	Stainless Steel Cast Austenitic	Plant Indoor Air (Int)	Loss of material	Inspection of Internal Surfaces in Miscellaneous Piping and Ducting Components (B2.1.22)	V.A-26	3.2.1.08	E
Valve	LBS	Stainless Steel Cast Austenitic	Raw Water (Int)	Loss of material	Inspection of Internal Surfaces in Miscellaneous Piping and Ducting Components (B2.1.22)	VII.C1-15	3.3.1.79	E, 3

Notes for Table 3.3.2-16:

Standard Notes:

A Consistent with NUREG-1801 item for component, material, environment, and aging effect. AMP is consistent with NUREG-1801 AMP.

B Consistent with NUREG-1801 item for component, material, environment, and aging effect. AMP takes some exceptions to NUREG-1801 AMP.

C Component is different, but consistent with NUREG-1801 item for material, environment, and aging effect. AMP is consistent with NUREG-1801 AMP.
E Consistent with NUREG-1801 for material, environment, and aging effect, but a different aging management program is credited or NUREG-1801 identifies a plant-specific aging management program.
G Environment not in NUREG-1801 for this component and material.
H Aging effect not in NUREG-1801 for this component, material and environment combination.

Plant Specific Notes:
1 The loss of preload aging effect is not identified in NUREG-1801 for this component, material, and environment combination. Loss of preload is managed by the Bolting Integrity program (B2.1.7).
2 The waste gas compressor seal water cooler heat exchanger tubes are fabricated of admiralty brass (nominal Cu-71%, Zn-28%, Sn-1%). The addition of tin to brass effectively inhibits dezincification. Consistent with NUREG-1801, Section IX.C which states that selective leaching is not a consideration for inhibited brass; loss of material due to selective leaching has not been selected as an aging effect.
3 The component environment is radioactive waste drains that have been evaluated as a raw water environment. Loss of material on internal component surface exposed to radioactive waste drains environment is managed by Inspection of Internal Surfaces in Miscellaneous Piping and Ducting Components program (B2.1.22) instead of Open-Cycle Cooling Water System program (B2.1.9).
4 Non-inhibited copper alloy >15 percent Zinc SSCs with surfaces exposed to Ventilation Atmosphere (Internal) or Plant Indoor Air (Internal) are subject to wetting due to condensation and thus are subject to loss of material due to selective leaching.

Table 3.3.2-17 Auxiliary Systems – Summary of Aging Management Evaluation – Liquid Radwaste System

Component Type	Intended Function	Material	Environment	Aging Effect Requiring Management	Aging Management Program	NUREG-1801 Vol. 2 Item	Table 1 Item	Notes
Caulking/ Sealant	PB	Elastomer	Lubricating Oil (Ext)	Hardening and loss of strength	External Surfaces Monitoring Program (B2.1.20)	None	None	G, 4
Caulking/ Sealant	PB	Elastomer	Plant Indoor Air (Ext)	Hardening and loss of strength	External Surfaces Monitoring Program (B2.1.20)	VII.F3-7	3.3.1.11	E
Closure Bolting	PB	Carbon Steel	Plant Indoor Air (Ext)	Loss of material	Bolting Integrity (B2.1.7)	VII.I-4	3.3.1.43	B
Closure Bolting	PB	Carbon Steel	Plant Indoor Air (Ext)	Loss of preload	Bolting Integrity (B2.1.7)	VII.I-5	3.3.1.45	B
Closure Bolting	LBS, PB, SIA	Stainless Steel	Borated Water Leakage (Ext)	Loss of preload	Bolting Integrity (B2.1.7)	IV.C2-8	3.1.1.52	B
Closure Bolting	LBS, PB, SIA	Stainless Steel	Borated Water Leakage (Ext)	None	None	VII.J-16	3.3.1.99	C
Closure Bolting	LBS, PB, SIA	Stainless Steel	Plant Indoor Air (Ext)	Loss of preload	Bolting Integrity (B2.1.7)	None	None	H, 1
Closure Bolting	LBS, PB, SIA	Stainless Steel	Plant Indoor Air (Ext)	None	None	VII.J-15	3.3.1.94	C
Demineralizer	LBS	Carbon Steel	Plant Indoor Air (Ext)	Loss of material	External Surfaces Monitoring Program (B2.1.20)	VII.I-8	3.3.1.58	B
Demineralizer	LBS	Carbon Steel	Plant Indoor Air (Int)	Loss of material	Inspection of Internal Surfaces in Miscellaneous Piping and Ducting Components (B2.1.22)	VII.G-23	3.3.1.71	B

Table 3.3.2-17 Auxiliary Systems – Summary of Aging Management Evaluation – Liquid Radwaste System (Continued)

Component Type	Intended Function	Material	Environment	Aging Effect Requiring Management	Aging Management Program	NUREG-1801 Vol. 2 Item	Table 1 Item	Notes
Demineralizer	LBS	Carbon Steel	Raw Water (Int)	Loss of material	Inspection of Internal Surfaces in Miscellaneous Piping and Ducting Components (B2.1.22)	VII.C1-19	3.3.1.76	E, 2
Filter	LBS	Stainless Steel	Plant Indoor Air (Ext)	None	None	VII.J-15	3.3.1.94	A
Filter	LBS	Stainless Steel	Plant Indoor Air (Int)	Loss of material	Inspection of Internal Surfaces in Miscellaneous Piping and Ducting Components (B2.1.22)	V.A-26	3.2.1.08	E
Filter	LBS	Stainless Steel	Raw Water (Int)	Loss of material	Inspection of Internal Surfaces in Miscellaneous Piping and Ducting Components (B2.1.22)	VII.C1-15	3.3.1.79	E, 2
Flame Arrestor	PB	Carbon Steel	Lubricating Oil (Int)	Loss of material	Lubricating Oil Analysis (B2.1.23) and One-Time Inspection (B2.1.16)	VII.G-26	3.3.1.15	D
Flame Arrestor	PB	Carbon Steel	Plant Indoor Air (Ext)	Loss of material	External Surfaces Monitoring Program (B2.1.20)	VII.I-8	3.3.1.58	B
Flow Element	LBS, SIA	Stainless Steel	Plant Indoor Air (Ext)	None	None	VII.J-15	3.3.1.94	A

Table 3.3.2-17 Auxiliary Systems – Summary of Aging Management Evaluation – Liquid Radwaste System (Continued)

Component Type	Intended Function	Material	Environment	Aging Effect Requiring Management	Aging Management Program	NUREG-1801 Vol. 2 Item	Table 1 Item	Notes
Flow Element	LBS, SIA	Stainless Steel	Raw Water (Int)	Loss of material	Inspection of Internal Surfaces in Miscellaneous Piping and Ducting Components (B2.1.22)	VII.C1-15	3.3.1.79	E, 2
Flow Indicator	LBS, PB	Glass	Plant Indoor Air (Ext)	None	None	VII.J-8	3.3.1.93	A
Flow Indicator	LBS	Glass	Plant Indoor Air (Int)	None	None	VII.J-7	3.3.1.93	A
Flow Indicator	LBS, PB	Glass	Raw Water (Int)	None	None	VII.J-11	3.3.1.93	A
Flow Indicator	LBS, PB, SIA	Stainless Steel	Plant Indoor Air (Ext)	None	None	VII.J-15	3.3.1.94	A
Flow Indicator	LBS	Stainless Steel	Plant Indoor Air (Int)	Loss of material	Inspection of Internal Surfaces in Miscellaneous Piping and Ducting Components (B2.1.22)	V.A-26	3.2.1.08	E
Flow Indicator	LBS, PB, SIA	Stainless Steel	Raw Water (Int)	Loss of material	Inspection of Internal Surfaces in Miscellaneous Piping and Ducting Components (B2.1.22)	VII.C1-15	3.3.1.79	E, 2
Heat Exchanger (Waste Concentrator)	LBS	Carbon Steel	Demineralized Water (Int)	Loss of material	Water Chemistry (B2.1.2) and One-Time Inspection (B2.1.16)	VIII.E-34	3.4.1.04	C

Table 3.3.2-17 Auxiliary Systems – Summary of Aging Management Evaluation – Liquid Radwaste System (Continued)

Component Type	Intended Function	Material	Environment	Aging Effect Requiring Management	Aging Management Program	NUREG-1801 Vol. 2 Item	Table 1 Item	Notes
Heat Exchanger (Waste Concentrator)	LBS, SIA	Carbon Steel	Plant Indoor Air (Ext)	Loss of material	External Surfaces Monitoring Program (B2.1.20)	VII.I-8	3.3.1.58	B
Heat Exchanger (Waste Concentrator)	LBS, SIA	Carbon Steel	Raw Water (Int)	Loss of material	Inspection of Internal Surfaces in Miscellaneous Piping and Ducting Components (B2.1.22)	VII.C1-19	3.3.1.76	E, 2
Heat Exchanger (Waste Concentrator)	LBS	Stainless Steel	Plant Indoor Air (Ext)	None	None	VII.J-15	3.3.1.94	A
Heat Exchanger (Waste Concentrator)	LBS	Stainless Steel	Raw Water (Int)	Loss of material	Inspection of Internal Surfaces in Miscellaneous Piping and Ducting Components (B2.1.22)	VII.C1-15	3.3.1.79	E, 2
Heater	LBS	Carbon Steel	Plant Indoor Air (Ext)	Loss of material	External Surfaces Monitoring Program (B2.1.20)	VII.I-8	3.3.1.58	B
Heater	LBS	Carbon Steel	Raw Water (Int)	Loss of material	Inspection of Internal Surfaces in Miscellaneous Piping and Ducting Components (B2.1.22)	VII.C1-19	3.3.1.76	E, 2
Instrument Bellows	LBS	Stainless Steel	Plant Indoor Air (Ext)	None	None	VII.J-15	3.3.1.94	A

Table 3.3.2-17 Auxiliary Systems – Summary of Aging Management Evaluation – Liquid Radwaste System (Continued)

Component Type	Intended Function	Material	Environment	Aging Effect Requiring Management	Aging Management Program	NUREG-1801 Vol. 2 Item	Table 1 Item	Notes
Instrument Bellows	LBS	Stainless Steel	Raw Water (Int)	Loss of material	Inspection of Internal Surfaces in Miscellaneous Piping and Ducting Components (B2.1.22)	VII.C1-15	3.3.1.79	E, 2
Orifice	LBS	Stainless Steel	Plant Indoor Air (Ext)	None	None	VII.J-15	3.3.1.94	A
Orifice	LBS	Stainless Steel	Raw Water (Int)	Loss of material	Inspection of Internal Surfaces in Miscellaneous Piping and Ducting Components (B2.1.22)	VII.C1-15	3.3.1.79	E, 2
Piping	PB, SIA	Carbon Steel	Dry Gas (Int)	None	None	VII.J-23	3.3.1.97	A
Piping	PB	Carbon Steel	Lubricating Oil (Int)	Loss of material	Lubricating Oil Analysis (B2.1.23) and One-Time Inspection (B2.1.16)	VII.G-26	3.3.1.15	B
Piping	LBS, PB, SIA	Carbon Steel	Plant Indoor Air (Ext)	Loss of material	External Surfaces Monitoring Program (B2.1.20)	VII.I-8	3.3.1.58	B
Piping	LBS, PB, SIA	Carbon Steel	Plant Indoor Air (Int)	Loss of material	Inspection of Internal Surfaces in Miscellaneous Piping and Ducting Components (B2.1.22)	VII.G-23	3.3.1.71	B

Table 3.3.2-17 Auxiliary Systems – Summary of Aging Management Evaluation – Liquid Radwaste System (Continued)

Component Type	Intended Function	Material	Environment	Aging Effect Requiring Management	Aging Management Program	NUREG-1801 Vol. 2 Item	Table 1 Item	Notes
Piping	LBS	Carbon Steel	Raw Water (Int)	Loss of material	Inspection of Internal Surfaces in Miscellaneous Piping and Ducting Components (B2.1.22)	VII.C1-19	3.3.1.76	E, 2
Piping	PB	Carbon Steel (Galvanized)	Lubricating Oil (Int)	Loss of material	Lubricating Oil Analysis (B2.1.23) and One-Time Inspection (B2.1.16)	VII.G-22	3.3.1.14	B
Piping	PB	Carbon Steel (Galvanized)	Plant Indoor Air (Ext)	Loss of material	External Surfaces Monitoring Program (B2.1.20)	VII.I-8	3.3.1.58	B
Piping	LBS	Carbon Steel with Elastomer Lining	Plant Indoor Air (Ext)	Loss of material	External Surfaces Monitoring Program (B2.1.20)	VII.I-8	3.3.1.58	B
Piping	LBS	Carbon Steel with Elastomer Lining	Plant Indoor Air (Int)	Loss of material	Inspection of Internal Surfaces in Miscellaneous Piping and Ducting Components (B2.1.22)	VII.G-23	3.3.1.71	B
Piping	LBS	Carbon Steel with Elastomer Lining	Raw Water (Int)	Loss of material	Inspection of Internal Surfaces in Miscellaneous Piping and Ducting Components (B2.1.22)	VII.C1-19	3.3.1.76	E, 2
Piping	LBS	Glass	Plant Indoor Air (Ext)	None	None	VII.J-8	3.3.1.93	A

Table 3.3.2-17 Auxiliary Systems – Summary of Aging Management Evaluation – Liquid Radwaste System (Continued)

Component Type	Intended Function	Material	Environment	Aging Effect Requiring Management	Aging Management Program	NUREG-1801 Vol. 2 Item	Table 1 Item	Notes
Piping	LBS	Glass	Plant Indoor Air (Int)	None	None	VII.J-7	3.3.1.93	A
Piping	LBS	Glass	Raw Water (Int)	None	None	VII.J-11	3.3.1.93	A
Piping	LBS, PB, SIA	Stainless Steel	Borated Water Leakage (Ext)	None	None	VII.J-16	3.3.1.99	A
Piping	LBS	Stainless Steel	Demineralized Water (Int)	Loss of material	Water Chemistry (B2.1.2) and One-Time Inspection (B2.1.16)	VIII.E-29	3.4.1.16	A
Piping	PB	Stainless Steel	Encased in Concrete (Ext)	None	None	VII.J-17	3.3.1.96	A
Piping	LBS, PB, SIA	Stainless Steel	Plant Indoor Air (Ext)	None	None	VII.J-15	3.3.1.94	A
Piping	LBS, PB, SIA	Stainless Steel	Plant Indoor Air (Int)	Loss of material	Inspection of Internal Surfaces in Miscellaneous Piping and Ducting Components (B2.1.22)	V.A-26	3.2.1.08	E
Piping	LBS, PB, SIA	Stainless Steel	Raw Water (Int)	Loss of material	Inspection of Internal Surfaces in Miscellaneous Piping and Ducting Components (B2.1.22)	VII.C1-15	3.3.1.79	E, 2
Piping	LBS	Stainless Steel	Secondary Water (Int)	Loss of material	Water Chemistry (B2.1.2) and One-Time Inspection (B2.1.16)	VIII.F-23	3.4.1.16	A

Table 3.3.2-17 Auxiliary Systems – Summary of Aging Management Evaluation – Liquid Radwaste System (Continued)

Component Type	Intended Function	Material	Environment	Aging Effect Requiring Management	Aging Management Program	NUREG-1801 Vol. 2 Item	Table 1 Item	Notes
Piping	LBS, PB, SIA	Stainless Steel	Treated Borated Water (Int)	Loss of material	Water Chemistry (B2.1.2) and One-Time Inspection (B2.1.16)	VII.E1-17	3.3.1.91	E, 6
Piping	LBS, PB, SIA	Stainless Steel	Treated Borated Water (Int)	Cracking	Water Chemistry (B2.1.2) and One-Time Inspection (B2.1.16)	VII.E1-20	3.3.1.90	E, 6
Pump	LBS	Carbon Steel	Plant Indoor Air (Ext)	Loss of material	External Surfaces Monitoring Program (B2.1.20)	VII.I-8	3.3.1.58	B
Pump	LBS	Carbon Steel	Raw Water (Int)	Loss of material	Inspection of Internal Surfaces in Miscellaneous Piping and Ducting Components (B2.1.22)	VII.C1-19	3.3.1.76	E, 2
Pump	LBS	Ductile Iron	Plant Indoor Air (Ext)	Loss of material	External Surfaces Monitoring Program (B2.1.20)	VII.I-8	3.3.1.58	B
Pump	LBS	Ductile Iron	Raw Water (Int)	Loss of material	Inspection of Internal Surfaces in Miscellaneous Piping and Ducting Components (B2.1.22)	VII.C1-19	3.3.1.76	E, 2
Pump	LBS, SIA	Stainless Steel	Borated Water Leakage (Ext)	None	None	VII.J-16	3.3.1.99	A
Pump	LBS, PB, SIA	Stainless Steel	Plant Indoor Air (Ext)	None	None	VII.J-15	3.3.1.94	A

Table 3.3.2-17 Auxiliary Systems – Summary of Aging Management Evaluation – Liquid Radwaste System (Continued)

Component Type	Intended Function	Material	Environment	Aging Effect Requiring Management	Aging Management Program	NUREG-1801 Vol. 2 Item	Table 1 Item	Notes
Pump	LBS, PB, SIA	Stainless Steel	Raw Water (Int)	Loss of material	Inspection of Internal Surfaces in Miscellaneous Piping and Ducting Components (B2.1.22)	VII.C1-15	3.3.1.79	E, 2
Pump	LBS, SIA	Stainless Steel	Treated Borated Water (Int)	Loss of material	Water Chemistry (B2.1.2) and One-Time Inspection (B2.1.16)	VII.E1-17	3.3.1.91	E, 6
Pump	LBS, SIA	Stainless Steel	Treated Borated Water (Int)	Cracking	Water Chemistry (B2.1.2) and One-Time Inspection (B2.1.16)	VII.E1-20	3.3.1.90	E, 6
Sample Cooler	LBS, SIA	Carbon Steel	Plant Indoor Air (Ext)	Loss of material	External Surfaces Monitoring Program (B2.1.20)	VII.I-8	3.3.1.58	B
Sample Cooler	LBS, SIA	Carbon Steel	Raw Water (Int)	Loss of material	Inspection of Internal Surfaces in Miscellaneous Piping and Ducting Components (B2.1.22)	VII.C1-19	3.3.1.76	E, 2
Sample Cooler	LBS, SIA	Copper Alloy	Plant Indoor Air (Ext)	None	None	VIII.I-2	3.4.1.41	A
Sample Cooler	LBS, SIA	Copper Alloy	Raw Water (Int)	Loss of material	Inspection of Internal Surfaces in Miscellaneous Piping and Ducting Components (B2.1.22)	VII.C1-9	3.3.1.81	E, 3
Sample Cooler	LBS, SIA	Copper Alloy (> 15% Zinc)	Plant Indoor Air (Ext)	None	None	VIII.I-2	3.4.1.41	A

Table 3.3.2-17 Auxiliary Systems – Summary of Aging Management Evaluation – Liquid Radwaste System (Continued)

Component Type	Intended Function	Material	Environment	Aging Effect Requiring Management	Aging Management Program	NUREG-1801 Vol. 2 Item	Table 1 Item	Notes
Sample Cooler	LBS, SIA	Copper Alloy (> 15% Zinc)	Raw Water (Int)	Loss of material	Selective Leaching of Materials (B2.1.17)	VII.C1-10	3.3.1.84	A
Sample Cooler	LBS, SIA	Nickel-Alloys	Plant Indoor Air (Ext)	None	None	VII.J-14	3.3.1.94	A
Sample Cooler	LBS, SIA	Nickel-Alloys	Raw Water (Int)	Loss of material	Inspection of Internal Surfaces in Miscellaneous Piping and Ducting Components (B2.1.22)	VII.C1-13	3.3.1.78	E, 3
Sample Cooler	LBS, SIA	Stainless Steel	Plant Indoor Air (Ext)	None	None	VII.J-15	3.3.1.94	A
Sample Cooler	LBS, SIA	Stainless Steel	Raw Water (Int)	Loss of material	Inspection of Internal Surfaces in Miscellaneous Piping and Ducting Components (B2.1.22)	VII.C1-15	3.3.1.79	E, 2
Sight Gauge	LBS	Carbon Steel	Plant Indoor Air (Ext)	Loss of material	External Surfaces Monitoring Program (B2.1.20)	VII.I-8	3.3.1.58	B
Sight Gauge	LBS	Carbon Steel	Raw Water (Int)	Loss of material	Inspection of Internal Surfaces in Miscellaneous Piping and Ducting Components (B2.1.22)	VII.C1-19	3.3.1.76	E, 2
Sight Gauge	LBS	Glass	Plant Indoor Air (Ext)	None	None	VII.J-8	3.3.1.93	A
Sight Gauge	LBS	Glass	Raw Water (Int)	None	None	VII.J-11	3.3.1.93	A

Table 3.3.2-17 Auxiliary Systems – Summary of Aging Management Evaluation – Liquid Radwaste System (Continued)

Component Type	Intended Function	Material	Environment	Aging Effect Requiring Management	Aging Management Program	NUREG-1801 Vol. 2 Item	Table 1 Item	Notes
Sight Gauge	LBS	Glass	Treated Borated Water (Int)	None	None	VII.J-12	3.3.1.93	A
Sight Gauge	LBS	Stainless Steel	Borated Water Leakage (Ext)	None	None	VII.J-16	3.3.1.99	A
Sight Gauge	LBS	Stainless Steel	Plant Indoor Air (Ext)	None	None	VII.J-15	3.3.1.94	A
Sight Gauge	LBS	Stainless Steel	Raw Water (Int)	Loss of material	Inspection of Internal Surfaces in Miscellaneous Piping and Ducting Components (B2.1.22)	VII.C1-15	3.3.1.79	E, 2
Sight Gauge	LBS	Stainless Steel	Treated Borated Water (Int)	Loss of material	Water Chemistry (B2.1.2) and One-Time Inspection (B2.1.16)	VII.E1-17	3.3.1.91	E, 6
Sight Gauge	LBS	Stainless Steel	Treated Borated Water (Int)	Cracking	Water Chemistry (B2.1.2) and One-Time Inspection (B2.1.16)	VII.E1-20	3.3.1.90	E, 6
Strainer	LBS	Carbon Steel	Plant Indoor Air (Ext)	Loss of material	External Surfaces Monitoring Program (B2.1.20)	VII.I-8	3.3.1.58	B
Strainer	LBS	Carbon Steel	Raw Water (Int)	Loss of material	Inspection of Internal Surfaces in Miscellaneous Piping and Ducting Components (B2.1.22)	VII.C1-19	3.3.1.76	E, 2
Strainer	LBS	Cast Iron	Plant Indoor Air (Ext)	Loss of material	External Surfaces Monitoring Program (B2.1.20)	VII.I-8	3.3.1.58	B

Table 3.3.2-17 Auxiliary Systems – Summary of Aging Management Evaluation – Liquid Radwaste System (Continued)

Component Type	Intended Function	Material	Environment	Aging Effect Requiring Management	Aging Management Program	NUREG-1801 Vol. 2 Item	Table 1 Item	Notes
Strainer	LBS	Cast Iron	Raw Water (Int)	Loss of material	Inspection of Internal Surfaces in Miscellaneous Piping and Ducting Components (B2.1.22)	VII.C1-19	3.3.1.76	E, 2
Strainer	FIL, LBS	Stainless Steel	Plant Indoor Air (Ext)	None	None	VII.J-15	3.3.1.94	A
Strainer	FIL	Stainless Steel	Plant Indoor Air (Int)	Loss of material	Inspection of Internal Surfaces in Miscellaneous Piping and Ducting Components (B2.1.22)	V.A-26	3.2.1.08	E
Strainer	LBS	Stainless Steel	Raw Water (Int)	Loss of material	Inspection of Internal Surfaces in Miscellaneous Piping and Ducting Components (B2.1.22)	VII.C1-15	3.3.1.79	E, 2
Tank	LBS	Carbon Steel	Plant Indoor Air (Ext)	Loss of material	External Surfaces Monitoring Program (B2.1.20)	VII.I-8	3.3.1.58	B
Tank	LBS	Carbon Steel	Plant Indoor Air (Int)	Loss of material	Inspection of Internal Surfaces in Miscellaneous Piping and Ducting Components (B2.1.22)	VII.G-23	3.3.1.71	D

Table 3.3.2-17 Auxiliary Systems – Summary of Aging Management Evaluation – Liquid Radwaste System (Continued)

Component Type	Intended Function	Material	Environment	Aging Effect Requiring Management	Aging Management Program	NUREG-1801 Vol. 2 Item	Table 1 Item	Notes
Tank	LBS	Carbon Steel	Raw Water (Int)	Loss of material	Inspection of Internal Surfaces in Miscellaneous Piping and Ducting Components (B2.1.22)	VII.C1-19	3.3.1.76	E, 2
Tank	LBS, SIA	Stainless Steel	Borated Water Leakage (Ext)	None	None	VII.J-16	3.3.1.99	C
Tank	LBS	Stainless Steel	Dry Gas (Int)	None	None	VII.J-19	3.3.1.97	A
Tank	LBS, SIA	Stainless Steel	Plant Indoor Air (Ext)	None	None	VII.J-15	3.3.1.94	C
Tank	LBS	Stainless Steel	Plant Indoor Air (Int)	Loss of material	Inspection of Internal Surfaces in Miscellaneous Piping and Ducting Components (B2.1.22)	V.A-26	3.2.1.08	E
Tank	LBS, SIA	Stainless Steel	Raw Water (Int)	Loss of material	Inspection of Internal Surfaces in Miscellaneous Piping and Ducting Components (B2.1.22)	VII.C1-15	3.3.1.79	E, 2
Tank	LBS, SIA	Stainless Steel	Treated Borated Water (Int)	Loss of material	Water Chemistry (B2.1.2) and One-Time Inspection (B2.1.16)	VII.E1-17	3.3.1.91	E, 6
Tank	LBS, SIA	Stainless Steel	Treated Borated Water (Int)	Cracking	Water Chemistry (B2.1.2) and One-Time Inspection (B2.1.16)	VII.E1-20	3.3.1.90	E, 6

Table 3.3.2-17 Auxiliary Systems – Summary of Aging Management Evaluation – Liquid Radwaste System (Continued)

Component Type	Intended Function	Material	Environment	Aging Effect Requiring Management	Aging Management Program	NUREG-1801 Vol. 2 Item	Table 1 Item	Notes
Tank (RCP Lube Oil Collection)	PB	Carbon Steel	Lubricating Oil (Int)	Loss of material	Lubricating Oil Analysis (B2.1.23) and One-Time Inspection (B2.1.16)	VII.G-27	3.3.1.16	B
Tank (RCP Lube Oil Collection)	PB	Carbon Steel	Plant Indoor Air (Ext)	Loss of material	External Surfaces Monitoring Program (B2.1.20)	VII.I-8	3.3.1.58	B
Tank (RCP Lube Oil Collection)	PB	Carbon Steel	Plant Indoor Air (Int)	Loss of material	Inspection of Internal Surfaces in Miscellaneous Piping and Ducting Components (B2.1.22)	VII.G-23	3.3.1.71	D
Test Connection	LBS	Stainless Steel	Borated Water Leakage (Ext)	None	None	VII.J-16	3.3.1.99	A
Test Connection	LBS	Stainless Steel	Plant Indoor Air (Ext)	None	None	VII.J-15	3.3.1.94	A
Test Connection	LBS	Stainless Steel	Raw Water (Int)	Loss of material	Inspection of Internal Surfaces in Miscellaneous Piping and Ducting Components (B2.1.22)	VII.C1-15	3.3.1.79	E, 2
Test Connection	LBS	Stainless Steel	Treated Borated Water (Int)	Loss of material	Water Chemistry (B2.1.2) and One-Time Inspection (B2.1.16)	VII.E1-17	3.3.1.91	E, 6
Test Connection	LBS	Stainless Steel	Treated Borated Water (Int)	Cracking	Water Chemistry (B2.1.2) and One-Time Inspection (B2.1.16)	VII.E1-20	3.3.1.90	E, 6

Table 3.3.2-17 Auxiliary Systems – Summary of Aging Management Evaluation – Liquid Radwaste System (Continued)

Component Type	Intended Function	Material	Environment	Aging Effect Requiring Management	Aging Management Program	NUREG-1801 Vol. 2 Item	Table 1 Item	Notes
Test Connection	LBS	Stainless Steel Cast Austenitic	Plant Indoor Air (Ext)	None	None	VII.J-15	3.3.1.94	A
Test Connection	LBS	Stainless Steel Cast Austenitic	Raw Water (Int)	Loss of material	Inspection of Internal Surfaces in Miscellaneous Piping and Ducting Components (B2.1.22)	VII.C1-15	3.3.1.79	E, 2
Trap	LBS	Cast Iron	Plant Indoor Air (Ext)	Loss of material	External Surfaces Monitoring Program (B2.1.20)	VII.I-8	3.3.1.58	B
Trap	LBS	Cast Iron	Raw Water (Int)	Loss of material	Inspection of Internal Surfaces in Miscellaneous Piping and Ducting Components (B2.1.22)	VII.C1-19	3.3.1.76	E, 2
Trap	LBS	Stainless Steel	Demineralized Water (Int)	Loss of material	Water Chemistry (B2.1.2) and One-Time Inspection (B2.1.16)	VIII.E-29	3.4.1.16	A
Trap	LBS	Stainless Steel	Plant Indoor Air (Ext)	None	None	VII.J-15	3.3.1.94	A
Tubing	LBS	Stainless Steel	Borated Water Leakage (Ext)	None	None	VII.J-16	3.3.1.99	A
Tubing	LBS, PB	Stainless Steel	Plant Indoor Air (Ext)	None	None	VII.J-15	3.3.1.94	A

Table 3.3.2-17 Auxiliary Systems – Summary of Aging Management Evaluation – Liquid Radwaste System (Continued)

Component Type	Intended Function	Material	Environment	Aging Effect Requiring Management	Aging Management Program	NUREG-1801 Vol. 2 Item	Table 1 Item	Notes
Tubing	LBS, PB	Stainless Steel	Plant Indoor Air (Int)	Loss of material	Inspection of Internal Surfaces in Miscellaneous Piping and Ducting Components (B2.1.22)	V.A-26	3.2.1.08	E
Tubing	LBS, PB	Stainless Steel	Raw Water (Int)	Loss of material	Inspection of Internal Surfaces in Miscellaneous Piping and Ducting Components (B2.1.22)	VII.C1-15	3.3.1.79	E, 2
Tubing	LBS	Stainless Steel	Treated Borated Water (Int)	Loss of material	Water Chemistry (B2.1.2) and One-Time Inspection (B2.1.16)	VII.E1-17	3.3.1.91	E, 6
Tubing	LBS	Stainless Steel	Treated Borated Water (Int)	Cracking	Water Chemistry (B2.1.2) and One-Time Inspection (B2.1.16)	VII.E1-20	3.3.1.90	E, 6
Valve	LBS, SIA	Carbon Steel	Borated Water Leakage (Ext)	Loss of material	Boric Acid Corrosion (B2.1.4)	VII.I-10	3.3.1.89	A
Valve	LBS, SIA	Carbon Steel	Demineralized Water (Int)	Loss of material	Water Chemistry (B2.1.2) and One-Time Inspection (B2.1.16)	VIII.E-34	3.4.1.04	A
Valve	LBS, PB, SIA	Carbon Steel	Dry Gas (Int)	None	None	VII.J-23	3.3.1.97	A
Valve	PB	Carbon Steel	Lubricating Oil (Int)	Loss of material	Lubricating Oil Analysis (B2.1.23) and One-Time Inspection (B2.1.16)	VII.G-26	3.3.1.15	B

Table 3.3.2-17 Auxiliary Systems – Summary of Aging Management Evaluation – Liquid Radwaste System (Continued)

Component Type	Intended Function	Material	Environment	Aging Effect Requiring Management	Aging Management Program	NUREG-1801 Vol. 2 Item	Table 1 Item	Notes
Valve	LBS, PB, SIA	Carbon Steel	Plant Indoor Air (Ext)	Loss of material	External Surfaces Monitoring Program (B2.1.20)	VII.I-8	3.3.1.58	B
Valve	LBS, PB, SIA	Carbon Steel	Plant Indoor Air (Int)	Loss of material	Inspection of Internal Surfaces in Miscellaneous Piping and Ducting Components (B2.1.22)	VII.G-23	3.3.1.71	B
Valve	LBS, PB, SIA	Carbon Steel	Raw Water (Int)	Loss of material	Inspection of Internal Surfaces in Miscellaneous Piping and Ducting Components (B2.1.22)	VII.C1-19	3.3.1.76	E, 2
Valve	LBS	Carbon Steel	Secondary Water (Int)	Loss of material	Water Chemistry (B2.1.2) and One-Time Inspection (B2.1.16)	VIII.E-34	3.4.1.04	A
Valve	LBS, SIA	Carbon Steel	Treated Borated Water (Int)	Loss of material	Inspection of Internal Surfaces in Miscellaneous Piping and Ducting Components (B2.1.22)	None	None	G, 5
Valve	LBS, PB, SIA	Cast Iron	Plant Indoor Air (Ext)	Loss of material	External Surfaces Monitoring Program (B2.1.20)	VII.I-8	3.3.1.58	B

Table 3.3.2-17 Auxiliary Systems – Summary of Aging Management Evaluation – Liquid Radwaste System (Continued)

Component Type	Intended Function	Material	Environment	Aging Effect Requiring Management	Aging Management Program	NUREG-1801 Vol. 2 Item	Table 1 Item	Notes
Valve	LBS, PB, SIA	Cast Iron	Raw Water (Int)	Loss of material	Inspection of Internal Surfaces in Miscellaneous Piping and Ducting Components (B2.1.22)	VII.C1-19	3.3.1.76	E, 2
Valve	LBS	Copper Alloy (> 15% Zinc)	Demineralized Water (Int)	Loss of material	Selective Leaching of Materials (B2.1.17)	VII.C2-7	3.3.1.84	A
Valve	LBS	Copper Alloy (> 15% Zinc)	Plant Indoor Air (Ext)	None	None	VIII.I-2	3.4.1.41	A
Valve	LBS	Ductile Iron	Plant Indoor Air (Ext)	Loss of material	External Surfaces Monitoring Program (B2.1.20)	VII.I-8	3.3.1.58	B
Valve	LBS	Ductile Iron	Raw Water (Int)	Loss of material	Inspection of Internal Surfaces in Miscellaneous Piping and Ducting Components (B2.1.22)	VII.C1-19	3.3.1.76	E, 2
Valve	LBS, PB, SIA	Stainless Steel	Borated Water Leakage (Ext)	None	None	VII.J-16	3.3.1.99	A
Valve	LBS, SIA	Stainless Steel	Demineralized Water (Int)	Loss of material	Water Chemistry (B2.1.2) and One-Time Inspection (B2.1.16)	VIII.E-29	3.4.1.16	A
Valve	SIA	Stainless Steel	Dry Gas (Int)	None	None	VII.J-19	3.3.1.97	A
Valve	LBS, PB, SIA	Stainless Steel	Plant Indoor Air (Ext)	None	None	VII.J-15	3.3.1.94	A

Table 3.3.2-17 Auxiliary Systems – Summary of Aging Management Evaluation – Liquid Radwaste System (Continued)

Component Type	Intended Function	Material	Environment	Aging Effect Requiring Management	Aging Management Program	NUREG-1801 Vol. 2 Item	Table 1 Item	Notes
Valve	LBS, PB, SIA	Stainless Steel	Plant Indoor Air (Int)	Loss of material	Inspection of Internal Surfaces in Miscellaneous Piping and Ducting Components (B2.1.22)	V.A-26	3.2.1.08	E
Valve	LBS, PB, SIA	Stainless Steel	Raw Water (Int)	Loss of material	Inspection of Internal Surfaces in Miscellaneous Piping and Ducting Components (B2.1.22)	VII.C1-15	3.3.1.79	E, 2
Valve	LBS	Stainless Steel	Secondary Water (Int)	Loss of material	Water Chemistry (B2.1.2) and One-Time Inspection (B2.1.16)	VIII.F-23	3.4.1.16	A
Valve	LBS, PB, SIA	Stainless Steel	Treated Borated Water (Int)	Loss of material	Water Chemistry (B2.1.2) and One-Time Inspection (B2.1.16)	VII.E1-17	3.3.1.91	E, 6
Valve	LBS, PB, SIA	Stainless Steel	Treated Borated Water (Int)	Cracking	Water Chemistry (B2.1.2) and One-Time Inspection (B2.1.16)	VII.E1-20	3.3.1.90	E, 6
Valve	LBS, PB, SIA	Stainless Steel Cast Austenitic	Borated Water Leakage (Ext)	None	None	VII.J-16	3.3.1.99	A
Valve	LBS	Stainless Steel Cast Austenitic	Demineralized Water (Int)	Loss of material	Water Chemistry (B2.1.2) and One-Time Inspection (B2.1.16)	VIII.E-29	3.4.1.16	A
Valve	LBS, PB, SIA	Stainless Steel Cast Austenitic	Plant Indoor Air (Ext)	None	None	VII.J-15	3.3.1.94	A

Table 3.3.2-17 Auxiliary Systems – Summary of Aging Management Evaluation – Liquid Radwaste System (Continued)

Component Type	Intended Function	Material	Environment	Aging Effect Requiring Management	Aging Management Program	NUREG-1801 Vol. 2 Item	Table 1 Item	Notes
Valve	LBS	Stainless Steel Cast Austenitic	Plant Indoor Air (Int)	Loss of material	Inspection of Internal Surfaces in Miscellaneous Piping and Ducting Components (B2.1.22)	V.A-26	3.2.1.08	E
Valve	LBS, PB, SIA	Stainless Steel Cast Austenitic	Raw Water (Int)	Loss of material	Inspection of Internal Surfaces in Miscellaneous Piping and Ducting Components (B2.1.22)	VII.C1-15	3.3.1.79	E, 2
Valve	LBS, PB, SIA	Stainless Steel Cast Austenitic	Treated Borated Water (Int)	Loss of material	Water Chemistry (B2.1.2) and One-Time Inspection (B2.1.16)	VII.E1-17	3.3.1.91	E, 6
Valve	LBS, PB, SIA	Stainless Steel Cast Austenitic	Treated Borated Water (Int)	Cracking	Water Chemistry (B2.1.2) and One-Time Inspection (B2.1.16)	VII.E1-20	3.3.1.90	E, 6
Vessel	LBS	Carbon Steel	Plant Indoor Air (Ext)	Loss of material	External Surfaces Monitoring Program (B2.1.20)	VII.I-8	3.3.1.58	B
Vessel	LBS	Carbon Steel	Raw Water (Int)	Loss of material	Inspection of Internal Surfaces in Miscellaneous Piping and Ducting Components (B2.1.22)	VII.C1-19	3.3.1.76	E, 2
Vessel	LBS	Stainless Steel	Plant Indoor Air (Ext)	None	None	VII.J-15	3.3.1.94	A

Table 3.3.2-17 Auxiliary Systems – Summary of Aging Management Evaluation – Liquid Radwaste System (Continued)

Component Type	Intended Function	Material	Environment	Aging Effect Requiring Management	Aging Management Program	NUREG-1801 Vol. 2 Item	Table 1 Item	Notes
Vessel	LBS	Stainless Steel	Raw Water (Int)	Loss of material	Inspection of Internal Surfaces in Miscellaneous Piping and Ducting Components (B2.1.22)	VII.C1-15	3.3.1.79	E, 2

Notes for Table 3.3.2-17:

Standard Notes:

A Consistent with NUREG-1801 item for component, material, environment, and aging effect. AMP is consistent with NUREG-1801 AMP.

B Consistent with NUREG-1801 item for component, material, environment, and aging effect. AMP takes some exceptions to NUREG-1801 AMP.

C Component is different, but consistent with NUREG-1801 item for material, environment, and aging effect. AMP is consistent with NUREG-1801 AMP.

D Component is different, but consistent with NUREG-1801 item for material, environment, and aging effect. AMP takes some exceptions to NUREG-1801 AMP.

E Consistent with NUREG-1801 for material, environment, and aging effect, but a different aging management program is credited or NUREG-1801 identifies a plant-specific aging management program.

G Environment not in NUREG-1801 for this component and material.

H Aging effect not in NUREG-1801 for this component, material and environment combination.

Plant Specific Notes:

1 The loss of preload aging effect is not identified in NUREG-1801 for this component, material, and environment combination. Loss of preload is managed by the Bolting Integrity program (B2.1.7).

2 The component environment for the radioactive waste drains has been evaluated as a raw water environment. Loss of material on internal component surface exposed to floor and equipment drains environment is managed by Inspection of Internal Surfaces in Miscellaneous Piping and Ducting Components program (B2.1.22) instead of Open-Cycle Cooling Water System program (B2.1.9).

3 Component has been abandoned-in-place and is not served by the closed-cycle cooling water system. The Closed-Cycle Cooling Water System program is not credited. Leakage past the isolation valve(s) is considered possible and, therefore, it is managed by Inspection of Internal Surfaces in Miscellaneous Piping and Ducting Components program (B2.1.22).

4 The RCP lube oil spill collection drain guttering joints are caulked with oil resistant, heat resistant, no scale material. This caulking is exposed to lubricating oil. External Surfaces Monitoring Program (B2.1.20) manages the aging effects.

5 NUREG-1801 does not address carbon steel components in treated borated water. The aging of carbon steel piping and piping components exposed to treated borated water is managed by Inspection of Internal Surfaces in Miscellaneous Piping and Ducting Components program (B2.1.22).

6 The Water Chemistry program (B2.1.2) and the One-Time Inspection program (B2.1.16) manages loss of material due to pitting and crevice corrosion and cracking due to stress corrosion cracking. The One-Time Inspection program (B2.1.16) includes selected components at susceptible locations.

Table 3.3.2-18 Auxiliary Systems – Summary of Aging Management Evaluation – Miscellaneous Systems in scope ONLY for Criterion 10 CFR 54.4(a)(2)

Component Type	Intended Function	Material	Environment	Aging Effect Requiring Management	Aging Management Program	NUREG-1801 Vol. 2 Item	Table 1 Item	Notes
Bellows	LBS	Stainless Steel	Closed Cycle Cooling Water (Int)	Loss of material	Closed-Cycle Cooling Water System (B2.1.10)	VII.C2-10	3.3.1.50	B
Bellows	LBS	Stainless Steel	Plant Indoor Air (Ext)	None	None	VII.J-15	3.3.1.94	A
Chiller	LBS	Copper Alloy	Plant Indoor Air (Ext)	None	None	VIII.I-2	3.4.1.41	C
Chiller	LBS	Copper Alloy	Secondary Water (Int)	Loss of material	Water Chemistry (B2.1.2) and One-Time Inspection (B2.1.16)	VIII.A-5	3.4.1.15	C
Closure Bolting	LBS, SIA	Carbon Steel	Atmosphere/ Weather (Ext)	Loss of preload	Bolting Integrity (B2.1.7)	None	None	H, 1
Closure Bolting	LBS, SIA	Carbon Steel	Atmosphere/ Weather (Ext)	Loss of material	Bolting Integrity (B2.1.7)	VII.I-1	3.3.1.43	B
Closure Bolting	LBS, SIA	Carbon Steel	Plant Indoor Air (Ext)	Loss of material	Bolting Integrity (B2.1.7)	VII.I-4	3.3.1.43	B
Closure Bolting	LBS, SIA	Carbon Steel	Plant Indoor Air (Ext)	Loss of preload	Bolting Integrity (B2.1.7)	VII.I-5	3.3.1.45	B
Closure Bolting	LBS	Stainless Steel	Borated Water Leakage (Ext)	Loss of preload	Bolting Integrity (B2.1.7)	IV.C2-8	3.1.1.52	B
Closure Bolting	LBS	Stainless Steel	Borated Water Leakage (Ext)	None	None	VII.J-16	3.3.1.99	C
Closure Bolting	LBS	Stainless Steel	Plant Indoor Air (Ext)	Loss of preload	Bolting Integrity (B2.1.7)	None	None	H, 1

Table 3.3.2-18 Auxiliary Systems – Summary of Aging Management Evaluation – Miscellaneous Systems in scope ONLY for Criterion 10 CFR 54.4(a)(2) (Continued)

Component Type	Intended Function	Material	Environment	Aging Effect Requiring Management	Aging Management Program	NUREG-1801 Vol. 2 Item	Table 1 Item	Notes
Closure Bolting	LBS	Stainless Steel	Plant Indoor Air (Ext)	None	None	VII.J-15	3.3.1.94	C
Demineralizer	LBS	Plexiglass	Plant Indoor Air (Ext)	None	None	None	None	F, 3
Demineralizer	LBS	Plexiglass	Secondary Water (Int)	None	None	None	None	F, 3
Filter	LBS	Stainless Steel	Plant Indoor Air (Ext)	None	None	VII.J-15	3.3.1.94	A
Filter	LBS	Stainless Steel	Plant Indoor Air (Int)	Loss of material	Inspection of Internal Surfaces in Miscellaneous Piping and Ducting Components (B2.1.22)	V.A-26	3.2.1.08	E
Filter	LBS	Stainless Steel	Raw Water (Int)	Loss of material	Inspection of Internal Surfaces in Miscellaneous Piping and Ducting Components (B2.1.22)	VII.C1-15	3.3.1.79	E, 2
Filter	LBS	Stainless Steel	Secondary Water (Int)	Loss of material	Water Chemistry (B2.1.2) and One-Time Inspection (B2.1.16)	VIII.D1-4	3.4.1.16	A
Flexible Hoses	LBS	Elastomer	Closed Cycle Cooling Water (Int)	Hardening and loss of strength	Inspection of Internal Surfaces in Miscellaneous Piping and Ducting Components (B2.1.22)	None	None	G

Table 3.3.2-18 Auxiliary Systems – Summary of Aging Management Evaluation – Miscellaneous Systems in scope ONLY for Criterion 10 CFR 54.4(a)(2) (Continued)

Component Type	Intended Function	Material	Environment	Aging Effect Requiring Management	Aging Management Program	NUREG-1801 Vol. 2 Item	Table 1 Item	Notes
Flexible Hoses	LBS	Elastomer	Plant Indoor Air (Ext)	Loss of material	External Surfaces Monitoring Program (B2.1.20)	VII.F1-5	3.3.1.34	E
Flexible Hoses	LBS	Elastomer	Plant Indoor Air (Ext)	Hardening and loss of strength	External Surfaces Monitoring Program (B2.1.20)	VII.F1-7	3.3.1.11	E
Flow Element	LBS	Stainless Steel	Plant Indoor Air (Ext)	None	None	VII.J-15	3.3.1.94	A
Flow Element	LBS	Stainless Steel	Raw Water (Int)	Loss of material	Inspection of Internal Surfaces in Miscellaneous Piping and Ducting Components (B2.1.22)	VII.C1-15	3.3.1.79	E, 2
Flow Indicator	LBS	Glass	Plant Indoor Air (Ext)	None	None	VII.J-8	3.3.1.93	A
Flow Indicator	LBS	Glass	Plant Indoor Air (Int)	None	None	VII.J-7	3.3.1.93	A
Flow Indicator	LBS	Plexiglass	Plant Indoor Air (Ext)	None	None	None	None	F, 3
Flow Indicator	LBS	Plexiglass	Raw Water (Int)	None	None	None	None	F, 3
Heat Exchanger (Isothermal Bath Chiller)	LBS	Copper Alloy	Dry Gas (Int)	None	None	VII.J-4	3.3.1.97	A

Table 3.3.2-18 Auxiliary Systems – Summary of Aging Management Evaluation – Miscellaneous Systems in scope ONLY for Criterion 10 CFR 54.4(a)(2) (Continued)

Component Type	Intended Function	Material	Environment	Aging Effect Requiring Management	Aging Management Program	NUREG-1801 Vol. 2 Item	Table 1 Item	Notes
Heat Exchanger (Isothermal Chiller)	LBS	Copper Alloy	Secondary Water (Ext)	Loss of material	Water Chemistry (B2.1.2) and One-Time Inspection (B2.1.16)	VIII.A-5	3.4.1.15	C
Hose	LBS	Elastomer	Plant Indoor Air (Ext)	Hardening and loss of strength	External Surfaces Monitoring Program (B2.1.20)	VII.F2-7	3.3.1.11	E
Hose	LBS	Elastomer	Secondary Water (Int)	Hardening and loss of strength	Inspection of Internal Surfaces in Miscellaneous Piping and Ducting Components (B2.1.22)	None	None	G
Indicator	LBS	Carbon Steel	Plant Indoor Air (Ext)	Loss of material	External Surfaces Monitoring Program (B2.1.20)	VII.I-8	3.3.1.58	B
Indicator	LBS	Carbon Steel	Raw Water (Int)	Loss of material	Inspection of Internal Surfaces in Miscellaneous Piping and Ducting Components (B2.1.22)	VII.C1-19	3.3.1.76	E, 2
Indicator	LBS	Stainless Steel	Plant Indoor Air (Ext)	None	None	VII.J-15	3.3.1.94	A
Indicator	LBS	Stainless Steel	Plant Indoor Air (Int)	Loss of material	Inspection of Internal Surfaces in Miscellaneous Piping and Ducting Components (B2.1.22)	V.A-26	3.2.1.08	E

Table 3.3.2-18 Auxiliary Systems – Summary of Aging Management Evaluation – Miscellaneous Systems in scope ONLY for Criterion 10 CFR 54.4(a)(2) (Continued)

Component Type	Intended Function	Material	Environment	Aging Effect Requiring Management	Aging Management Program	NUREG-1801 Vol. 2 Item	Table 1 Item	Notes
Indicator	LBS	Stainless Steel	Raw Water (Int)	Loss of material	Inspection of Internal Surfaces in Miscellaneous Piping and Ducting Components (B2.1.22)	VII.C1-15	3.3.1.79	E, 2
Instrument Bellows	LBS	Stainless Steel	Plant Indoor Air (Ext)	None	None	VII.J-15	3.3.1.94	A
Instrument Bellows	LBS	Stainless Steel	Raw Water (Int)	Loss of material	Inspection of Internal Surfaces in Miscellaneous Piping and Ducting Components (B2.1.22)	VII.C1-15	3.3.1.79	E, 2
Piping	SIA	Carbon Steel	Atmosphere/ Weather (Ext)	Loss of material	External Surfaces Monitoring Program (B2.1.20)	VII.I-9	3.3.1.58	B
Piping	LBS	Carbon Steel	Closed Cycle Cooling Water (Int)	Loss of material	Closed-Cycle Cooling Water System (B2.1.10)	VII.C2-14	3.3.1.47	B
Piping	LBS, SIA	Carbon Steel	Plant Indoor Air (Ext)	Loss of material	External Surfaces Monitoring Program (B2.1.20)	VII.I-8	3.3.1.58	B
Piping	SIA	Carbon Steel	Ventilation Atmosphere (Int)	Loss of material	Inspection of Internal Surfaces in Miscellaneous Piping and Ducting Components (B2.1.22)	VII.F2-3	3.3.1.72	B
Piping	LBS	Copper Alloy	Plant Indoor Air (Ext)	None	None	VIII.I-2	3.4.1.41	A

Table 3.3.2-18 Auxiliary Systems – Summary of Aging Management Evaluation – Miscellaneous Systems in scope ONLY for Criterion 10 CFR 54.4(a)(2) (Continued)

Component Type	Intended Function	Material	Environment	Aging Effect Requiring Management	Aging Management Program	NUREG-1801 Vol. 2 Item	Table 1 Item	Notes
Piping	LBS	Copper Alloy	Secondary Water (Int)	Loss of material	Water Chemistry (B2.1.2) and One-Time Inspection (B2.1.16)	VIII.A-5	3.4.1.15	A
Piping	LBS	Stainless Steel	Borated Water Leakage (Ext)	None	None	VII.J-16	3.3.1.99	A
Piping	LBS	Stainless Steel	Demineralized Water (Int)	Loss of material	Water Chemistry (B2.1.2) and One-Time Inspection (B2.1.16)	VIII.E-29	3.4.1.16	A
Piping	LBS, SIA	Stainless Steel	Plant Indoor Air (Ext)	None	None	VII.J-15	3.3.1.94	A
Piping	LBS	Stainless Steel	Plant Indoor Air (Int)	Loss of material	Inspection of Internal Surfaces in Miscellaneous Piping and Ducting Components (B2.1.22)	V.A-26	3.2.1.08	E
Piping	LBS	Stainless Steel	Raw Water (Int)	Loss of material	Inspection of Internal Surfaces in Miscellaneous Piping and Ducting Components (B2.1.22)	VII.C1-15	3.3.1.79	E, 2
Piping	LBS, SIA	Stainless Steel	Secondary Water (Int)	Loss of material	Water Chemistry (B2.1.2) and One-Time Inspection (B2.1.16)	VIII.D1-4	3.4.1.16	A
Piping	LBS	Stainless Steel	Secondary Water (Int)	Cracking	Water Chemistry (B2.1.2) and One-Time Inspection (B2.1.16)	VIII.D1-5	3.4.1.14	A

Table 3.3.2-18 Auxiliary Systems – Summary of Aging Management Evaluation – Miscellaneous Systems in scope ONLY for Criterion 10 CFR 54.4(a)(2) (Continued)

Component Type	Intended Function	Material	Environment	Aging Effect Requiring Management	Aging Management Program	NUREG-1801 Vol. 2 Item	Table 1 Item	Notes
Piping	LBS	Stainless Steel	Treated Borated Water (Int)	Loss of material	Water Chemistry (B2.1.2) and One-Time Inspection (B2.1.16)	VII.E1-17	3.3.1.91	E, 4
Piping	LBS	Stainless Steel	Treated Borated Water (Int)	Cracking	Water Chemistry (B2.1.2) and One-Time Inspection (B2.1.16)	VII.E1-20	3.3.1.90	E, 4
Pump	LBS	Carbon Steel	Closed Cycle Cooling Water (Int)	Loss of material	Closed-Cycle Cooling Water System (B2.1.10)	VII.C2-14	3.3.1.47	B
Pump	LBS, SIA	Carbon Steel	Plant Indoor Air (Ext)	Loss of material	External Surfaces Monitoring Program (B2.1.20)	VII.I-8	3.3.1.58	B
Pump	SIA	Carbon Steel	Ventilation Atmosphere (Int)	Loss of material	Inspection of Internal Surfaces in Miscellaneous Piping and Ducting Components (B2.1.22)	VII.F3-3	3.3.1.72	B
Pump	LBS	Cast Iron	Closed Cycle Cooling Water (Int)	Loss of material	Closed-Cycle Cooling Water System (B2.1.10)	VII.C2-14	3.3.1.47	B
Pump	LBS	Cast Iron	Plant Indoor Air (Ext)	Loss of material	External Surfaces Monitoring Program (B2.1.20)	VII.I-8	3.3.1.58	B
Pump	LBS	Stainless Steel	Plant Indoor Air (Ext)	None	None	VII.J-15	3.3.1.94	A

Table 3.3.2-18 Auxiliary Systems – Summary of Aging Management Evaluation – Miscellaneous Systems in scope ONLY for Criterion 10 CFR 54.4(a)(2) (Continued)

Component Type	Intended Function	Material	Environment	Aging Effect Requiring Management	Aging Management Program	NUREG-1801 Vol. 2 Item	Table 1 Item	Notes
Pump	LBS	Stainless Steel	Raw Water (Int)	Loss of material	Inspection of Internal Surfaces in Miscellaneous Piping and Ducting Components (B2.1.22)	VII.C1-15	3.3.1.79	E, 2
Sample Sink	LBS	Stainless Steel	Plant Indoor Air (Ext)	None	None	VII.J-15	3.3.1.94	C
Sample Sink	LBS	Stainless Steel	Secondary Water (Int)	Loss of material	Water Chemistry (B2.1.2) and One-Time Inspection (B2.1.16)	VIII.D1-4	3.4.1.16	C
Sensor Element	LBS	Stainless Steel	Plant Indoor Air (Ext)	None	None	VII.J-15	3.3.1.94	A
Sensor Element	LBS	Stainless Steel	Secondary Water (Int)	Loss of material	Water Chemistry (B2.1.2) and One-Time Inspection (B2.1.16)	VIII.D1-4	3.4.1.16	A
Sight Gauge	LBS	Glass	Plant Indoor Air (Ext)	None	None	VII.J-8	3.3.1.93	A
Sight Gauge	LBS	Glass	Secondary Water (Int)	None	None	VIII.I-8	3.4.1.40	A
Strainer	LBS	Carbon Steel	Closed Cycle Cooling Water (Int)	Loss of material	Closed-Cycle Cooling Water System (B2.1.10)	VII.C2-14	3.3.1.47	B
Strainer	LBS	Carbon Steel	Plant Indoor Air (Ext)	Loss of material	External Surfaces Monitoring Program (B2.1.20)	VII.I-8	3.3.1.58	B
Strainer	LBS	Cast Iron	Closed Cycle Cooling Water (Int)	Loss of material	Closed-Cycle Cooling Water System (B2.1.10)	VII.C2-14	3.3.1.47	B

Table 3.3.2-18 Auxiliary Systems – Summary of Aging Management Evaluation – Miscellaneous Systems in scope ONLY for Criterion 10 CFR 54.4(a)(2) (Continued)

Component Type	Intended Function	Material	Environment	Aging Effect Requiring Management	Aging Management Program	NUREG-1801 Vol. 2 Item	Table 1 Item	Notes
Strainer	LBS	Cast Iron	Plant Indoor Air (Ext)	Loss of material	External Surfaces Monitoring Program (B2.1.20)	VII.I-8	3.3.1.58	B
Strainer	LBS	Stainless Steel	Plant Indoor Air (Ext)	None	None	VII.J-15	3.3.1.94	A
Strainer	LBS	Stainless Steel	Raw Water (Int)	Loss of material	Inspection of Internal Surfaces in Miscellaneous Piping and Ducting Components (B2.1.22)	VII.C1-15	3.3.1.79	E, 2
Tank	LBS	Stainless Steel	Plant Indoor Air (Ext)	None	None	VII.J-15	3.3.1.94	C
Tank	LBS	Stainless Steel	Plant Indoor Air (Int)	Loss of material	Inspection of Internal Surfaces in Miscellaneous Piping and Ducting Components (B2.1.22)	V.A-26	3.2.1.08	E
Tank	LBS	Stainless Steel	Raw Water (Int)	Loss of material	Inspection of Internal Surfaces in Miscellaneous Piping and Ducting Components (B2.1.22)	VII.C1-15	3.3.1.79	E, 2
Tank	LBS	Stainless Steel	Secondary Water (Int)	Loss of material	Water Chemistry (B2.1.2) and One-Time Inspection (B2.1.16)	VIII.D1-4	3.4.1.16	C
Test Connection	LBS	Stainless Steel	Plant Indoor Air (Ext)	None	None	VII.J-15	3.3.1.94	A

Table 3.3.2-18 Auxiliary Systems – Summary of Aging Management Evaluation – Miscellaneous Systems in scope ONLY for Criterion 10 CFR 54.4(a)(2) (Continued)

Component Type	Intended Function	Material	Environment	Aging Effect Requiring Management	Aging Management Program	NUREG-1801 Vol. 2 Item	Table 1 Item	Notes
Test Connection	LBS	Stainless Steel	Raw Water (Int)	Loss of material	Inspection of Internal Surfaces in Miscellaneous Piping and Ducting Components (B2.1.22)	VII.C1-15	3.3.1.79	E, 2
Tubing	LBS	Stainless Steel	Closed Cycle Cooling Water (Int)	Loss of material	Closed-Cycle Cooling Water System (B2.1.10)	VII.C2-10	3.3.1.50	B
Tubing	LBS	Stainless Steel	Demineralized Water (Int)	Loss of material	Water Chemistry (B2.1.2) and One-Time Inspection (B2.1.16)	VIII.E-29	3.4.1.16	A
Tubing	LBS, SIA	Stainless Steel	Plant Indoor Air (Ext)	None	None	VII.J-15	3.3.1.94	A
Tubing	LBS	Stainless Steel	Plant Indoor Air (Int)	Loss of material	Inspection of Internal Surfaces in Miscellaneous Piping and Ducting Components (B2.1.22)	V.A-26	3.2.1.08	E
Tubing	LBS	Stainless Steel	Raw Water (Int)	Loss of material	Inspection of Internal Surfaces in Miscellaneous Piping and Ducting Components (B2.1.22)	VII.C1-15	3.3.1.79	E, 2
Tubing	SIA	Stainless Steel	Ventilation Atmosphere (Int)	Loss of material	Inspection of Internal Surfaces in Miscellaneous Piping and Ducting Components (B2.1.22)	VII.F3-1	3.3.1.27	E

Table 3.3.2-18 Auxiliary Systems – Summary of Aging Management Evaluation – Miscellaneous Systems in scope ONLY for Criterion 10 CFR 54.4(a)(2) (Continued)

Component Type	Intended Function	Material	Environment	Aging Effect Requiring Management	Aging Management Program	NUREG-1801 Vol. 2 Item	Table 1 Item	Notes
Valve	LBS	Carbon Steel	Closed Cycle Cooling Water (Int)	Loss of material	Closed-Cycle Cooling Water System (B2.1.10)	VII.C2-14	3.3.1.47	B
Valve	LBS	Carbon Steel	Demineralized Water (Int)	Loss of material	Water Chemistry (B2.1.2) and One-Time Inspection (B2.1.16)	VIII.E-34	3.4.1.04	A
Valve	LBS	Carbon Steel	Plant Indoor Air (Ext)	Loss of material	External Surfaces Monitoring Program (B2.1.20)	VII.I-8	3.3.1.58	B
Valve	LBS	Carbon Steel	Plant Indoor Air (Int)	Loss of material	Inspection of Internal Surfaces in Miscellaneous Piping and Ducting Components (B2.1.22)	VII.G-23	3.3.1.71	B
Valve	LBS	Carbon Steel	Raw Water (Int)	Loss of material	Inspection of Internal Surfaces in Miscellaneous Piping and Ducting Components (B2.1.22)	VII.C1-19	3.3.1.76	E, 2
Valve	LBS	Carbon Steel	Secondary Water (Int)	Loss of material	Water Chemistry (B2.1.2) and One-Time Inspection (B2.1.16)	VIII.D1-8	3.4.1.04	A
Valve	LBS	Cast Iron	Closed Cycle Cooling Water (Int)	Loss of material	Closed-Cycle Cooling Water System (B2.1.10)	VII.C2-14	3.3.1.47	B
Valve	LBS	Cast Iron	Plant Indoor Air (Ext)	Loss of material	External Surfaces Monitoring Program (B2.1.20)	VII.I-8	3.3.1.58	B

Table 3.3.2-18 Auxiliary Systems – Summary of Aging Management Evaluation – Miscellaneous Systems in scope ONLY for Criterion 10 CFR 54.4(a)(2) (Continued)

Component Type	Intended Function	Material	Environment	Aging Effect Requiring Management	Aging Management Program	NUREG-1801 Vol. 2 Item	Table 1 Item	Notes
Valve	LBS	Cast Iron (Gray Cast Iron)	Closed Cycle Cooling Water (Int)	Loss of material	Selective Leaching of Materials (B2.1.17)	VII.C2-8	3.3.1.85	A
Valve	LBS	Cast Iron (Gray Cast Iron)	Closed Cycle Cooling Water (Int)	Loss of material	Closed-Cycle Cooling Water System (B2.1.10)	VII.C2-14	3.3.1.47	B
Valve	LBS	Cast Iron (Gray Cast Iron)	Plant Indoor Air (Ext)	Loss of material	External Surfaces Monitoring Program (B2.1.20)	VII.I-8	3.3.1.58	B
Valve	LBS	Copper Alloy	Closed Cycle Cooling Water (Int)	Loss of material	Closed-Cycle Cooling Water System (B2.1.10)	VII.C2-4	3.3.1.51	B
Valve	LBS, SIA	Copper Alloy	Plant Indoor Air (Ext)	None	None	VIII.I-2	3.4.1.41	A
Valve	LBS, SIA	Copper Alloy	Secondary Water (Int)	Loss of material	Water Chemistry (B2.1.2) and One-Time Inspection (B2.1.16)	VIII.A-5	3.4.1.15	A
Valve	LBS	Stainless Steel	Borated Water Leakage (Ext)	None	None	VII.J-16	3.3.1.99	A
Valve	LBS	Stainless Steel	Demineralized Water (Int)	Loss of material	Water Chemistry (B2.1.2) and One-Time Inspection (B2.1.16)	VIII.E-29	3.4.1.16	A
Valve	LBS, SIA	Stainless Steel	Plant Indoor Air (Ext)	None	None	VII.J-15	3.3.1.94	A

Table 3.3.2-18 Auxiliary Systems – Summary of Aging Management Evaluation – Miscellaneous Systems in scope ONLY for Criterion 10 CFR 54.4(a)(2) (Continued)

Component Type	Intended Function	Material	Environment	Aging Effect Requiring Management	Aging Management Program	NUREG-1801 Vol. 2 Item	Table 1 Item	Notes
Valve	LBS	Stainless Steel	Plant Indoor Air (Int)	Loss of material	Inspection of Internal Surfaces in Miscellaneous Piping and Ducting Components (B2.1.22)	V.A-26	3.2.1.08	E
Valve	LBS	Stainless Steel	Raw Water (Int)	Loss of material	Inspection of Internal Surfaces in Miscellaneous Piping and Ducting Components (B2.1.22)	VII.C1-15	3.3.1.79	E, 2
Valve	LBS, SIA	Stainless Steel	Secondary Water (Int)	Loss of material	Water Chemistry (B2.1.2) and One-Time Inspection (B2.1.16)	VIII.D1-4	3.4.1.16	A
Valve	LBS	Stainless Steel	Secondary Water (Int)	Cracking	Water Chemistry (B2.1.2) and One-Time Inspection (B2.1.16)	VIII.D1-5	3.4.1.14	A
Valve	LBS	Stainless Steel	Steam (Int)	Cracking	Water Chemistry (B2.1.2) and One-Time Inspection (B2.1.16)	VIII.A-10	3.4.1.39	E, 4
Valve	LBS	Stainless Steel	Steam (Int)	Loss of material	Water Chemistry (B2.1.2) and One-Time Inspection (B2.1.16)	VIII.A-12	3.4.1.37	E, 4
Valve	LBS	Stainless Steel	Treated Borated Water (Int)	Loss of material	Water Chemistry (B2.1.2) and One-Time Inspection (B2.1.16)	VII.E1-17	3.3.1.91	E, 4

Table 3.3.2-18 Auxiliary Systems – Summary of Aging Management Evaluation – Miscellaneous Systems in scope ONLY for Criterion 10 CFR 54.4(a)(2) (Continued)

Component Type	Intended Function	Material	Environment	Aging Effect Requiring Management	Aging Management Program	NUREG-1801 Vol. 2 Item	Table 1 Item	Notes
Valve	LBS	Stainless Steel	Treated Borated Water (Int)	Cracking	Water Chemistry (B2.1.2) and One-Time Inspection (B2.1.16)	VII.E1-20	3.3.1.90	E, 4
Valve	LBS	Stainless Steel Cast Austenitic	Borated Water Leakage (Ext)	None	None	VII.J-16	3.3.1.99	A
Valve	LBS	Stainless Steel Cast Austenitic	Plant Indoor Air (Ext)	None	None	VII.J-15	3.3.1.94	A
Valve	LBS	Stainless Steel Cast Austenitic	Raw Water (Int)	Loss of material	Inspection of Internal Surfaces in Miscellaneous Piping and Ducting Components (B2.1.22)	VII.C1-15	3.3.1.79	E, 2
Valve	LBS	Stainless Steel Cast Austenitic	Treated Borated Water (Int)	Loss of material	Water Chemistry (B2.1.2) and One-Time Inspection (B2.1.16)	VII.E1-17	3.3.1.91	E, 4

Notes for Table 3.3.2-18:

Standard Notes:

A Consistent with NUREG-1801 item for component, material, environment, and aging effect. AMP is consistent with NUREG-1801 AMP.

B Consistent with NUREG-1801 item for component, material, environment, and aging effect. AMP takes some exceptions to NUREG-1801 AMP.

C Component is different, but consistent with NUREG-1801 item for material, environment, and aging effect. AMP is consistent with NUREG-1801 AMP.

D Component is different, but consistent with NUREG-1801 item for material, environment, and aging effect. AMP takes some exceptions to NUREG-1801 AMP.
E Consistent with NUREG-1801 for material, environment, and aging effect, but a different aging management program is credited or NUREG-1801 identifies a plant-specific aging management program.
F Material not in NUREG-1801 for this component.
G Environment not in NUREG-1801 for this component and material.
H Aging effect not in NUREG-1801 for this component, material and environment combination.

Plant Specific Notes:
1 The loss of preload aging effect is not identified in NUREG-1801 for this component, material, and environment combination. Loss of preload is managed by the Bolting Integrity program (B2.1.7).
2 The component environment is radioactive waste drains that have been evaluated as a raw water environment. Loss of material on internal component surface exposed to radioactive waste drains environment is managed by Inspection of Internal Surfaces in Miscellaneous Piping and Ducting Components program (B2.1.22) instead of Open-Cycle Cooling Water System program (B2.1.9).
3 NUREG-1801 does not address Plexiglass components. Plexiglass is evaluated as a thermoplastic.
4 The Water Chemistry program (B2.1.2) and the One-Time Inspection program (B2.1.16) manages loss of material due to pitting and crevice corrosion and cracking due to stress corrosion cracking. The One-Time Inspection program (B2.1.16) includes selected components at susceptible locations.

3.4 AGING MANAGEMENT OF STEAM AND POWER CONVERSION SYSTEM

3.4.1 Introduction

Section 3.4 provides the results of the aging management reviews (AMRs) for those component types identified in Section 2.3.4, Steam and Power Conversion System, subject to AMR. These systems are described in the following sections:

- Turbine Steam Supply System (Section 2.3.4.1)
- Auxiliary Steam System (Section 2.3.4.2)
- Feedwater System (Section 2.3.4.3)
- Condensate System (Section 2.3.4.4)
- Auxiliary Feedwater System (Section 2.3.4.5)

Table 3.4.1, Summary of Aging Management Evaluations in Chapter VIII of NUREG-1801 for Steam and Power Conversion System, provides the summary of the programs evaluated in NUREG-1801 that are applicable to the component types in this section. Table 3.4.1 uses the format of Table 1 described in Section 3.0.

3.4.2 Results

The following tables summarize the results of the aging management review for the systems in the Steam and Power Conversion System area:

- Table 3.4.2-1, Steam and Power Conversion System – Summary of Aging Management Evaluation – Turbine Steam Supply System
- Table 3.4.2-2, Steam and Power Conversion System – Summary of Aging Management Evaluation – Auxiliary Steam System
- Table 3.4.2-3, Steam and Power Conversion System – Summary of Aging Management Evaluation – Feedwater System
- Table 3.4.2-4, Steam and Power Conversion System – Summary of Aging Management Evaluation – Condensate System
- Table 3.4.2-5, Steam and Power Conversion System – Summary of Aging Management Evaluation – Auxiliary Feedwater System

These tables use the format of Table 2 discussed in Section 3.0.

3.4.2.1 Materials, Environments, Aging Effects Requiring Management and Aging Management Programs

The materials from which the component types are fabricated, the environments to which they are exposed, the potential aging effects requiring management, and the aging management programs used to manage these aging effects are provided for each of the above systems in the following subsections.

3.4.2.1.1 Turbine Steam Supply System

Materials

The materials of construction for the turbine steam supply system component types are:

- Carbon Steel
- Cast Iron
- Copper Alloy
- Polyvinyl Chloride (PVC)
- Stainless Steel
- Stainless Steel Cast Austenitic

Environment

The turbine steam supply system component types are exposed to the following environments:

- Atmosphere/Weather
- Closed-Cycle Cooling Water
- Demineralized Water
- Dry Gas
- Plant Indoor Air
- Secondary Water
- Sodium Hydroxide

- Steam
- Sulfuric Acid

Aging Effects Requiring Management

The following turbine steam supply system aging effects require management:

- Cracking
- Loss of material
- Loss of preload
- Reduction of heat transfer
- Wall thinning

Aging Management Programs

The following aging management programs manage the aging effects for the turbine steam supply system component types:

- Bolting Integrity (B2.1.7)
- Closed-Cycle Cooling Water System (B2.1.10)
- External Surfaces Monitoring Program (B2.1.20)
- Flow-Accelerated Corrosion (B2.1.6)
- Inspection of Internal Surfaces in Miscellaneous Piping and Ducting Components (B2.1.22)
- One-Time Inspection (B2.1.16)
- Water Chemistry (B2.1.2)

3.4.2.1.2 Auxiliary Steam System

Materials

The materials of construction for the auxiliary steam system component types are:

- Carbon Steel
- Cast Iron
- Copper Alloy

- Copper Alloy (> 15 percent Zinc)
- Copper Alloy (Aluminum > 8 percent)
- Ductile Iron
- Elastomer
- Glass
- Lexan (Thermoplastics)
- Stainless Steel

Environment

The auxiliary steam system components are exposed to the following environments:

- Atmosphere/Weather
- Closed-Cycle Cooling Water
- Demineralized Water
- Dry Gas
- Fuel Oil
- Lubricating Oil
- Plant Indoor Air
- Raw Water
- Secondary Water
- Steam

Aging Effects Requiring Management

The following auxiliary steam system aging effects require management:

- Cracking
- Hardening and loss of strength
- Loss of material
- Loss of preload
- Wall thinning

Aging Management Programs

The following aging management programs manage the aging effects for the auxiliary steam system component types:

- Bolting Integrity (B2.1.7)
- Closed-Cycle Cooling Water System (B2.1.10)
- External Surfaces Monitoring Program (B2.1.20)
- Flow-Accelerated Corrosion (B2.1.6)
- Inspection of Internal Surfaces in Miscellaneous Piping and Ducting Components (B2.1.22)
- One-Time Inspection (B2.1.16)
- Open-Cycle Cooling Water System (B2.1.9)
- Selective Leaching of Materials (B2.1.17)
- Water Chemistry (B2.1.2)

3.4.2.1.3 Feedwater System

Materials

The materials of construction for the feedwater system component types are:

- Carbon Steel
- Copper Alloy
- Stainless Steel
- Stainless Steel Cast Austenitic

Environment

The feedwater system components are exposed to the following environments:

- Atmosphere/Weather
- Closed-Cycle Cooling Water
- Plant Indoor Air
- Secondary Water

Aging Effects Requiring Management

The following feedwater system aging effects require management:

- Cracking
- Loss of material
- Loss of preload

Aging Management Programs

The following aging management programs manage the aging effects for the feedwater system component types:

- Bolting Integrity (B2.1.7)
- Closed-Cycle Cooling Water System (B2.1.10)
- External Surfaces Monitoring Program (B2.1.20)
- One-Time Inspection (B2.1.16)
- Water Chemistry (B2.1.2)

3.4.2.1.4 Condensate System

Materials

The materials of construction for the condensate system component types are:

- Carbon Steel
- Cast Iron
- Copper Alloy
- Glass
- Stainless Steel

Environment

The condensate system components are exposed to the following environments:

- Atmosphere/Weather
- Plant Indoor Air
- Raw Water

- Secondary Water
- Steam

Aging Effects Requiring Management

The following condensate system aging effects require management:

- Loss of material
- Loss of preload
- Wall thinning

Aging Management Programs

The following aging management programs manage the aging effects for the condensate system component types:

- Bolting Integrity (B2.1.7)
- External Surfaces Monitoring Program (B2.1.20)
- Flow-Accelerated Corrosion (B2.1.6)
- Inspection of Internal Surfaces in Miscellaneous Piping and Ducting Components (B2.1.22)
- One-Time Inspection (B2.1.16)
- Water Chemistry (B2.1.2)

3.4.2.1.5 Auxiliary Feedwater System

Materials

The materials of construction for the auxiliary feedwater system component types are:

- Carbon Steel
- Copper Alloy
- Glass
- Plexiglass
- Stainless Steel
- Stainless Steel Cast Austenitic

Environment

The auxiliary feedwater system components are exposed to the following environments:

- Demineralized Water
- Lubricating Oil
- Plant Indoor Air
- Raw Water
- Secondary Water

Aging Effects Requiring Management

The following auxiliary feedwater system aging effects require management:

- Loss of material
- Loss of preload
- Reduction of heat transfer

Aging Management Programs

The following aging management programs manage the aging effects for the auxiliary feedwater system component types:

- Bolting Integrity (B2.1.7)
- External Surfaces Monitoring Program (B2.1.20)
- Inspection of Internal Surfaces in Miscellaneous Piping and Ducting Components (B2.1.22)
- Lubricating Oil Analysis (B2.1.23)
- One-Time Inspection (B2.1.16)
- Water Chemistry (B2.1.2)

3.4.2.2 Further Evaluation of Aging Management as Recommended by NUREG-1801

NUREG-1801 provides the basis for identifying those programs that warrant further evaluation. For the Steam and Power Conversion System, those evaluations are addressed in the following subsections.

3.4.2.2.1 Cumulative Fatigue Damage

Evaluation of fatigue is a time-limited aging analysis (TLAA) as defined in 10 CFR 54.3. TLAAs are evaluated in accordance with 10 CFR 54.21(c)(1).

DCPP piping outside the reactor coolant pressure boundary is designed to ANSI B31.1 and B31.7, which assumes a reduction in the allowable secondary stress range if more than 7,000 full-range thermal cycles are expected in a design lifetime.

Section 4.3.5 describes the evaluation of these cyclic design TLAAs.

3.4.2.2.2 Loss of Material due to General, Pitting, and Crevice Corrosion

3.4.2.2.2.1 Steel piping and components, tanks, and heat exchangers exposed to treated water and steel piping and components exposed to steam

The Water Chemistry program (B2.1.2) and the One-Time Inspection program (B2.1.16) manages loss of material due to general, pitting, and crevice corrosion for carbon steel and gray cast iron components exposed to secondary water. The one-time inspection includes selected components at susceptible locations where contaminants could accumulate (e.g. stagnant flow locations).

A different aging management program is credited for the main condenser shell and hotwell internal surfaces. The aging of main condenser shell and hotwell internal surfaces exposed to the treated water and steam environment is managed by Inspection of Internal Surfaces in Miscellaneous Piping and Ducting Components program (B2.1.22).

3.4.2.2.2.2 Steel piping and components exposed to lubricating oil

The Lubricating Oil Analysis program (B2.1.23) and the One-Time Inspection program (B2.1.16) manages loss of material due to general, pitting, and crevice corrosion for carbon steel components exposed to lubricating oil. The one-time inspection includes selected components at susceptible locations where contaminants such as water could accumulate.

A different aging management program is credited for abandoned-in-place piping and components in the auxiliary steam system. The aging of internal component surfaces exposed to the lube oil environment of the abandoned-in-place portions of the auxiliary steam system are managed by Inspection of Internal Surfaces in Miscellaneous Piping and Ducting Components program (B2.1.22).

3.4.2.2.3 Loss of Material due to General, Pitting, Crevice, and Microbiologically-Influenced Corrosion (MIC), and Fouling

The Inspection of Internal Surfaces in Miscellaneous Piping and Ducting Components program (B2.1.22) manages loss of material due to general corrosion, pitting, crevice, and microbiologically influenced corrosion, and fouling for carbon steel components exposed to raw water.

3.4.2.2.4 Reduction of Heat Transfer due to Fouling

3.4.2.2.4.1 Stainless steel and copper alloy heat exchanger tubes exposed to treated water

The Water Chemistry program (B2.1.2) and the One-Time Inspection program (B2.1.16) manages loss of heat transfer due to fouling for copper alloy components exposed to secondary water. The one-time inspection includes selected components at susceptible locations where contaminants could accumulate (e.g. stagnant flow locations).

3.4.2.2.4.2 Stainless steel and copper alloy heat exchanger tubes exposed to lubricating oil

The Lubricating Oil Analysis program (B2.1.23) and the One-Time Inspection program (B2.1.16) manages reduction of heat transfer due to fouling for copper alloy components exposed to lubricating oil. The one-time inspection includes selected components at susceptible locations where contaminants such as water could accumulate.

3.4.2.2.5 Loss of Material due to General, Pitting, Crevice, and Microbiologically-Influenced Corrosion

3.4.2.2.5.1 Steel piping and components and tanks exposed to soil

Not applicable. DCPP has no in-scope steel components or tanks exposed to soil in the steam and power conversion systems, so the applicable NUREG-1801 lines were not used.

3.4.2.2.5.2 Steel heat exchanger components exposed to lubricating oil

Not applicable. DCPP has no in-scope steel heat exchanger components exposed to lubricating oil in the steam and power conversion systems, so the applicable NUREG-1801 rows were not used.

3.4.2.2.6 Cracking due to Stress Corrosion Cracking

The Water Chemistry program (B2.1.2) and the One-Time Inspection program (B2.1.16) manages cracking due to stress corrosion cracking for stainless steel components exposed to secondary water. The one-time inspection includes selected components at susceptible locations where contaminants could accumulate (e.g. stagnant flow locations).

3.4.2.2.7 Loss of Material due to Pitting and Crevice Corrosion

3.4.2.2.7.1 Stainless steel, aluminum, and copper alloy piping and components and stainless steel tanks and heat exchangers exposed to treated water

The Water Chemistry program (B2.1.2) and the One-Time Inspection program (B2.1.16) manages loss of material due to pitting and crevice corrosion for stainless steel and copper alloy components exposed to secondary water and demineralized water. The one-time inspection includes selected components at susceptible locations where contaminants could accumulate (e.g. stagnant flow locations).

A different aging management program is credited for abandoned-in-place piping and components in the auxiliary steam system. The aging of internal component surfaces exposed to the raw water environment in the abandoned-in-place portions of the auxiliary steam system are managed by the Inspection of Internal Surfaces in Miscellaneous Piping and Ducting Components program (B2.1.22).

3.4.2.2.7.2 Stainless steel piping and components exposed to soil

Not applicable. DCPP has no in-scope stainless steel components exposed to soil in the steam and power conversion systems, so the applicable NUREG-1801 lines were not used.

3.4.2.2.7.3 Copper alloy piping and components exposed to lubricating oil

The Lubricating Oil Analysis program (B2.1.23) and the One-Time Inspection program (B2.1.16) manages loss of material due to general, pitting and crevice corrosion for copper alloy components exposed to lubricating oil. The one-time inspection includes selected components at susceptible locations where contaminants such as water could accumulate.

A different aging management program is credited for abandoned-in-place piping and components in the auxiliary steam system. The aging of internal component

surfaces exposed to the lube oil environment of the abandoned-in-place portions of the auxiliary steam system are managed by Inspection of Internal Surfaces in Miscellaneous Piping and Ducting Components program (B2.1.22).

3.4.2.2.8 Loss of Material due to Pitting, Crevice, and Microbiologically-Influenced Corrosion

Not applicable. DCPP has no in-scope stainless steel components exposed to lube oil in the steam and power conversion systems, so the applicable NUREG-1801 lines were not used.

3.4.2.2.9 Loss of Material due to General, Pitting, Crevice, and Galvanic Corrosion

Not applicable to DCPP, applicable to BWR only.

3.4.2.2.10 Quality Assurance for Aging Management of Nonsafety-Related Components

Quality Assurance Program and Administrative Controls are discussed in Section B1.3.

3.4.2.3 Time-Limited Aging Analysis

The time-limited aging analyses identified below are associated with the Steam and Power Conversion System component types. The section within Chapter 4, Time-Limited Aging Analyses, is indicated in parenthesis.

- Cumulative Fatigue Damage (Section 4.3, Metal Fatigue Analysis)

3.4.3 Conclusions

The Steam and Power Conversion System component types that are subject to AMR have been evaluated. The aging management programs selected to manage the aging effects for the Steam and Power Conversion System component types are identified in the summary Tables and in Section 3.4.2.1.

A description of these aging management programs is provided in Appendix B, along with a demonstration that the identified aging effects will be managed for the period of extended operation.

Therefore, based on the demonstration provided in Appendix B, the effects of aging associated with the Steam and Power Conversion System component types will be adequately managed so that there is reasonable assurance that the intended functions will be maintained consistent with the current licensing basis during the period of extended operation.

Table 3.4.1 Summary of Aging Management Evaluations in Chapter VIII of NUREG-1801 for Steam and Power Conversion System

Item Number	Component Type	Aging Effect / Mechanism	Aging Management Program	Further Evaluation Recommended	Discussion
3.4.1.01	Steel piping, piping components, and piping elements exposed to steam or treated water	Cumulative fatigue damage	TLAA, evaluated in accordance with 10 CFR 54.21(c)	Yes, TLAA	Fatigue of metal components is a TLAA. See further evaluation in Section 3.4.2.2.1.
3.4.1.02	Steel piping, piping components, and piping elements exposed to steam	Loss of material due to general, pitting and crevice corrosion	Water Chemistry (B2.1.2) and One-Time Inspection (B2.1.16)	Yes	Consistent with NUREG-1801 for all components except for the main condenser shell and hotwell. A different aging management program is credited for the main condenser shell and hotwell internal surfaces. The aging of main condenser shell and hotwell internal surfaces exposed to the steam environment will be managed by Inspection of Internal Surfaces in Miscellaneous Piping and Ducting Components (B2.1.22). See further evaluation in Section 3.4.2.2.2.1.

Table 3.4.1 Summary of Aging Management Evaluations in Chapter VIII of NUREG-1801 for Steam and Power Conversion System (Continued)

Item Number	Component Type	Aging Effect / Mechanism	Aging Management Program	Further Evaluation Recommended	Discussion
3.4.1.03	Steel heat exchanger components exposed to treated water	Loss of material due to general, pitting and crevice corrosion	Water Chemistry (B2.1.2) and One-Time Inspection (B2.1.16)	Yes	Consistent with NUREG-1801 for all components except for the main condenser shell and hotwell. A different aging management program is credited for the main condenser shell and hotwell internal surfaces. The aging of main condenser shell and hotwell internal surfaces exposed to the treated water environment will be managed by Inspection of Internal Surfaces in Miscellaneous Piping and Ducting Components (B2.1.22). See further evaluation in Section 3.4.2.2.2.1.
3.4.1.04	Steel piping, piping components, and piping elements exposed to treated water	Loss of material due to general, pitting and crevice corrosion	Water Chemistry (B2.1.2) and One-Time Inspection (B2.1.16)	Yes	Consistent with NUREG-1801. See further evaluation in Section 3.4.2.2.2.1.

Table 3.4.1 Summary of Aging Management Evaluations in Chapter VIII of NUREG-1801 for Steam and Power Conversion System (Continued)

Item Number	Component Type	Aging Effect / Mechanism	Aging Management Program	Further Evaluation Recommended	Discussion
3.4.1.05					Not applicable - BWR only
3.4.1.06	Steel and stainless steel tanks exposed to treated water	Loss of material due to general (steel only) pitting and crevice corrosion	Water Chemistry (B2.1.2) and One-Time Inspection (B2.1.16)	Yes	Consistent with NUREG-1801. See further evaluation in Section 3.4.2.2.7.1.
3.4.1.07	Steel piping, piping components, and piping elements exposed to lubricating oil	Loss of material due to general, pitting and crevice corrosion	Lubricating Oil Analysis (B2.1.23) and One-Time Inspection (B2.1.16)	Yes	Consistent with NUREG-1801 for all non abandoned-in-place components. A different aging management program is credited for abandoned-in-place piping and components in the auxiliary steam system. The aging of internal component surfaces exposed to the lube oil environment of the abandoned-in-place portions of the auxiliary steam system will be managed by Inspection of Internal Surfaces in Miscellaneous Piping and Ducting Components (B2.1.22). See further evaluation in Section 3.4.2.2.2.2.

Table 3.4.1 Summary of Aging Management Evaluations in Chapter VIII of NUREG-1801 for Steam and Power Conversion System (Continued)

Item Number	Component Type	Aging Effect / Mechanism	Aging Management Program	Further Evaluation Recommended	Discussion
3.4.1.08	Steel piping, piping components, and piping elements exposed to raw water	Loss of material due to general, pitting, crevice, and microbiologically-influenced corrosion, and fouling	A plant-specific aging management program is to be evaluated.	Yes	Consistent with NUREG-1801. The plant-specific aging management program(s) used to manage the aging include: Inspection of Internal Surfaces in Miscellaneous Piping and Ducting Components (B2.1.22). See further evaluation in Section 3.4.2.2.3.
3.4.1.09	Stainless steel and copper alloy heat exchanger tubes exposed to treated water	Reduction of heat transfer due to fouling	Water Chemistry (B2.1.2) and One-Time Inspection (B2.1.16)	Yes	Consistent with NUREG-1801. See further evaluation in Section 3.4.2.2.4.1.

Table 3.4.1 Summary of Aging Management Evaluations in Chapter VIII of NUREG-1801 for Steam and Power Conversion System (Continued)

Item Number	Component Type	Aging Effect / Mechanism	Aging Management Program	Further Evaluation Recommended	Discussion
3.4.1.10	Steel, stainless steel, and copper alloy heat exchanger tubes exposed to lubricating oil	Reduction of heat transfer due to fouling	Lubricating Oil Analysis (B2.1.23) and One-Time Inspection (B2.1.16)	Yes	Consistent with NUREG-1801 with aging management program exceptions. The aging management program(s) with exceptions to NUREG-1801 include: Lubricating Oil Analysis (B2.1.23). See further evaluation in Section 3.4.2.2.4.2.
3.4.1.11	Buried steel piping, piping components, piping elements, and tanks (with or without coating or wrapping) exposed to soil	Loss of material due to general, pitting, crevice, and microbiologically-influenced corrosion	Buried Piping and Tanks Inspection (B2.1.18)	Yes	Not applicable. DCPP has no in-scope steel components or tanks exposed to soil in the steam and power conversion systems, so the applicable NUREG-1801 lines were not used. See further evaluation in Section 3.4.2.2.5.1.

Table 3.4.1 Summary of Aging Management Evaluations in Chapter VIII of NUREG-1801 for Steam and Power Conversion System (Continued)

Item Number	Component Type	Aging Effect / Mechanism	Aging Management Program	Further Evaluation Recommended	Discussion
3.4.1.12	Steel heat exchanger components exposed to lubricating oil	Loss of material due to general, pitting, crevice, and microbiologically-influenced corrosion	Lubricating Oil Analysis (B2.1.23) and One-Time Inspection (B2.1.16)	Yes	Not applicable. DCPP has no in-scope steel heat exchanger components exposed to lubricating oil in the steam and power conversion systems, so the applicable NUREG-1801 rows were not used. See further evaluation in Section 3.4.2.2.5.2.
3.4.1.13					Not applicable - BWR only
3.4.1.14	Stainless steel piping, piping components, piping elements, tanks, and heat exchanger components exposed to treated water >60°C (>140°F)	Cracking due to stress corrosion cracking	Water Chemistry (B2.1.2) and One-Time Inspection (B2.1.16)	Yes	Consistent with NUREG-1801. See further evaluation in Section 3.4.2.2.6.
3.4.1.15	Aluminum and copper alloy piping, piping components, and piping elements exposed to treated water	Loss of material due to pitting and crevice corrosion	Water Chemistry (B2.1.2) and One-Time Inspection (B2.1.16)	Yes	Consistent with NUREG-1801. See further evaluation in Section 3.4.2.2.7.1.

Table 3.4.1 Summary of Aging Management Evaluations in Chapter VIII of NUREG-1801 for Steam and Power Conversion System (Continued)

Item Number	Component Type	Aging Effect / Mechanism	Aging Management Program	Further Evaluation Recommended	Discussion
3.4.1.16	Stainless steel piping, piping components, and piping elements; tanks, and heat exchanger components exposed to treated water	Loss of material due to pitting and crevice corrosion	Water Chemistry (B2.1.2) and One-Time Inspection (B2.1.16)	Yes	Consistent with NUREG-1801 for all non abandoned-in-place components. A different aging management program is credited for abandoned-in-place piping and components in the auxiliary steam system. The aging of internal component surfaces exposed to the raw water environment in the abandoned-in-place portions of the auxiliary steam system are managed by Inspection of Internal Surfaces in Miscellaneous Piping and Ducting Components (B2.1.22). See further evaluation in Section 3.4.2.2.7.1.

Table 3.4.1 Summary of Aging Management Evaluations in Chapter VIII of NUREG-1801 for Steam and Power Conversion System (Continued)

Item Number	Component Type	Aging Effect / Mechanism	Aging Management Program	Further Evaluation Recommended	Discussion
3.4.1.17	Stainless steel piping, piping components, and piping elements exposed to soil	Loss of material due to pitting and crevice corrosion	A plant-specific aging management program is to be evaluated.	Yes	Not applicable. DCPP has no in-scope stainless steel components exposed to soil in the steam and power conversion systems, so the applicable NUREG-1801 lines were not used. See further evaluation in Section 3.4.2.2.7.2.

Table 3.4.1 Summary of Aging Management Evaluations in Chapter VIII of NUREG-1801 for Steam and Power Conversion System (Continued)

Item Number	Component Type	Aging Effect / Mechanism	Aging Management Program	Further Evaluation Recommended	Discussion
3.4.1.18	Copper alloy piping, piping components, and piping elements exposed to lubricating oil	Loss of material due to pitting and crevice corrosion	Lubricating Oil Analysis (B2.1.23) and One-Time Inspection (B2.1.16)	Yes	Consistent with NUREG-1801 for all non abandoned-in-place components. A different aging management program is credited for abandoned-in-place piping and components in the auxiliary steam system. The aging of internal component surfaces exposed to the lube oil environment of the abandoned-in-place portions of the auxiliary steam system will be managed by Inspection of Internal Surfaces in Miscellaneous Piping and Ducting Components (B2.1.22). See further evaluation in Section 3.4.2.2.7.3.

Table 3.4.1 Summary of Aging Management Evaluations in Chapter VIII of NUREG-1801 for Steam and Power Conversion System (Continued)

Item Number	Component Type	Aging Effect / Mechanism	Aging Management Program	Further Evaluation Recommended	Discussion
3.4.1.19	Stainless steel piping, piping components, piping elements, and heat exchanger components exposed to lubricating oil	Loss of material due to pitting, crevice, and microbiologically-influenced corrosion	Lubricating Oil Analysis (B2.1.23) and One-Time Inspection (B2.1.16)	Yes	Not applicable. DCPP has no in-scope stainless steel components exposed to lube oil in the steam and power conversion systems, so the applicable NUREG-1801 lines were not used. See further evaluation in Section 3.4.2.2.8.
3.4.1.20	Steel tanks exposed to air – outdoor (external)	Loss of material/ general, pitting, and crevice corrosion	Aboveground Steel Tanks	No	Not applicable. DCPP has no in-scope steel tanks in the steam and power conversion systems, so the applicable NUREG-1801 lines were not used.
3.4.1.21	High-strength steel closure bolting exposed to air with steam or water leakage	Cracking due to cyclic loading, stress corrosion cracking	Bolting Integrity (B2.1.7)	No	Not applicable. DCPP has no in-scope high strength bolting in the steam and power conversion systems, so the applicable NUREG-1801 line was not used.

Table 3.4.1 Summary of Aging Management Evaluations in Chapter VIII of NUREG-1801 for Steam and Power Conversion System (Continued)

Item Number	Component Type	Aging Effect / Mechanism	Aging Management Program	Further Evaluation Recommended	Discussion
3.4.1.22	Steel bolting and closure bolting exposed to air with steam or water leakage, air – outdoor (external), or air – indoor uncontrolled (external);	Loss of material due to general, pitting and crevice corrosion; loss of preload due to thermal effects, gasket creep, and self-loosening	Bolting Integrity (B2.1.7)	No	Consistent with NUREG-1801 with aging management program exceptions. The aging management program(s) with exceptions to NUREG-1801 include: Bolting Integrity (B2.1.7)
3.4.1.23	Stainless steel piping, piping components, and piping elements exposed to closed-cycle cooling water >60°C (>140°F)	Cracking due to stress corrosion cracking	Closed-Cycle Cooling Water System (B2.1.10)	No	Not applicable. DCPP has no in-scope stainless steel piping, piping components, or piping elements exposed to closed-cycle cooling water >60°C (140°F), so the applicable NUREG-1801 line was not used.
3.4.1.24	Steel heat exchanger components exposed to closed cycle cooling water	Loss of material due to general, pitting, crevice, and galvanic corrosion	Closed-Cycle Cooling Water System (B2.1.10)	No	Not applicable. DCPP has no in-scope steel heat exchanger components exposed to closed cycle cooling water in the steam and power conversion systems, so the applicable NUREG-1801 rows were not used.

Table 3.4.1 Summary of Aging Management Evaluations in Chapter VIII of NUREG-1801 for Steam and Power Conversion System (Continued)

Item Number	Component Type	Aging Effect / Mechanism	Aging Management Program	Further Evaluation Recommended	Discussion
3.4.1.25	Stainless steel piping, piping components, piping elements, and heat exchanger components exposed to closed cycle cooling water	Loss of material due to pitting and crevice corrosion	Closed-Cycle Cooling Water System (B2.1.10)	No	Consistent with NUREG-1801 with aging management program exceptions. The aging management program(s) with exceptions to NUREG-1801 include: Closed-Cycle Cooling Water System (B2.1.10)
3.4.1.26	Copper alloy piping, piping components, and piping elements exposed to closed cycle cooling water	Loss of material due to pitting, crevice, and galvanic corrosion	Closed-Cycle Cooling Water System (B2.1.10)	No	Consistent with NUREG-1801 with aging management program exceptions. The aging management program(s) with exceptions to NUREG-1801 include: Closed-Cycle Cooling Water System (B2.1.10)
3.4.1.27	Steel, stainless steel, and copper alloy heat exchanger tubes exposed to closed cycle cooling water	Reduction of heat transfer due to fouling	Closed-Cycle Cooling Water System (B2.1.10)	No	Consistent with NUREG-1801 with aging management program exceptions. The aging management program(s) with exceptions to NUREG-1801 include: Closed-Cycle Cooling Water System (B2.1.10)

Table 3.4.1 Summary of Aging Management Evaluations in Chapter VIII of NUREG-1801 for Steam and Power Conversion System (Continued)

Item Number	Component Type	Aging Effect / Mechanism	Aging Management Program	Further Evaluation Recommended	Discussion
3.4.1.28	Steel external surfaces exposed to air – indoor uncontrolled (external), condensation (external), or air outdoor (external)	Loss of material due to general corrosion	External Surfaces Monitoring (B2.1.20)	No	Consistent with NUREG-1801 with aging management program exceptions. The aging management program(s) with exceptions to NUREG-1801 include: External Surfaces Monitoring Program (B2.1.20)
3.4.1.29	Steel piping, piping components, and piping elements exposed to steam or treated water	Wall thinning due to flow-accelerated corrosion	Flow-Accelerated Corrosion (B2.1.6)	No	Consistent with NUREG-1801 with aging management program exceptions. The aging management program(s) with exceptions to NUREG-1801 include: Flow-Accelerated Corrosion (B2.1.6)

Table 3.4.1 Summary of Aging Management Evaluations in Chapter VIII of NUREG-1801 for Steam and Power Conversion System (Continued)

Item Number	Component Type	Aging Effect / Mechanism	Aging Management Program	Further Evaluation Recommended	Discussion
3.4.1.30	Steel piping, piping components, and piping elements exposed to air outdoor (internal) or condensation (internal)	Loss of material due to general, pitting, and crevice corrosion	Inspection of Internal Surfaces in Miscellaneous Piping and Ducting Components (B2.1.22)	No	Consistent with NUREG-1801 with aging management program exceptions. The aging management program(s) with exceptions to NUREG-1801 include: Inspection of Internal Surfaces in Miscellaneous Piping and Ducting Components (B2.1.22)
3.4.1.31	Steel heat exchanger components exposed to raw water	Loss of material due to general, pitting, crevice, galvanic, and microbiologically-influenced corrosion, and fouling	Open-Cycle Cooling Water System (B2.1.9)	No	Not applicable. DCPP has no in-scope steel heat exchanger components exposed to raw water in the steam and power conversion systems, so the applicable NUREG-1801 lines were not used.

Table 3.4.1 Summary of Aging Management Evaluations in Chapter VIII of NUREG-1801 for Steam and Power Conversion System (Continued)

Item Number	Component Type	Aging Effect / Mechanism	Aging Management Program	Further Evaluation Recommended	Discussion
3.4.1.32	Stainless steel and copper alloy piping, piping components, and piping elements exposed to raw water	Loss of material due to pitting, crevice, and microbiologically-influenced corrosion	Open-Cycle Cooling Water System (B2.1.9)	No	Consistent with NUREG-1801 for all non abandoned-in-place components. A different aging management program is credited for abandoned-in-place piping and components in the auxiliary steam system. The aging of internal component surfaces exposed to the raw water environment of the abandoned-in-place portions of the auxiliary steam system is managed by Inspection of Internal Surfaces in Miscellaneous Piping and Ducting Components (B2.1.22).
3.4.1.33	Stainless steel heat exchanger components exposed to raw water	Loss of material due to pitting, crevice, and microbiologically-influenced corrosion, and fouling	Open-Cycle Cooling Water System (B2.1.9)	No	Consistent with NUREG-1801.

Table 3.4.1 Summary of Aging Management Evaluations in Chapter VIII of NUREG-1801 for Steam and Power Conversion System (Continued)

Item Number	Component Type	Aging Effect / Mechanism	Aging Management Program	Further Evaluation Recommended	Discussion
3.4.1.34	Steel, stainless steel, and copper alloy heat exchanger tubes exposed to raw water	Reduction of heat transfer due to fouling	Open-Cycle Cooling Water System (B2.1.9)	No	Not applicable. DCPP has no in-scope steel, stainless steel, or copper alloy heat exchanger tubes exposed to raw water in the steam and power conversion systems, so the applicable NUREG-1801 lines were not used.
3.4.1.35	Copper alloy >15% Zn piping, piping components, and piping elements exposed to closed cycle cooling water, raw water, or treated water	Loss of material due to selective leaching	Selective Leaching of Materials (B2.1.17)	No	Consistent with NUREG-1801.
3.4.1.36	Gray cast iron piping, piping components, and piping elements exposed to soil, treated water, or raw water	Loss of material due to selective leaching	Selective Leaching of Materials (B2.1.17)	No	Consistent with NUREG-1801.

Table 3.4.1 Summary of Aging Management Evaluations in Chapter VIII of NUREG-1801 for Steam and Power Conversion System (Continued)

Item Number	Component Type	Aging Effect / Mechanism	Aging Management Program	Further Evaluation Recommended	Discussion
3.4.1.37	Steel, stainless steel, and nickel-based alloy piping, piping components, and piping elements exposed to steam	Loss of material due to pitting and crevice corrosion	Water Chemistry (B2.1.2)	No	Consistent with NUREG-1801 for material, environment, and aging effect, but a different aging management program Water Chemistry (B2.1.2) and One-Time Inspection (B2.1.16) is credited.
3.4.1.38	Steel bolting and external surfaces exposed to air with borated water leakage	Loss of material due to boric acid corrosion	Boric Acid Corrosion (B2.1.4)	No	Not applicable. DCPP has no in-scope components exposed to borated water leakage in the steam and power conversion systems, so the applicable NUREG-1801 lines were not used.
3.4.1.39	Stainless steel piping, piping components, and piping elements exposed to steam	Cracking due to stress corrosion cracking	Water Chemistry (B2.1.2)	No	Consistent with NUREG-1801 for material, environment, and aging effect, but a different aging management program Water Chemistry (B2.1.2) and One-Time Inspection (B2.1.16) is credited.

Table 3.4.1 Summary of Aging Management Evaluations in Chapter VIII of NUREG-1801 for Steam and Power Conversion System (Continued)

Item Number	Component Type	Aging Effect / Mechanism	Aging Management Program	Further Evaluation Recommended	Discussion
3.4.1.40	Glass piping elements exposed to air, lubricating oil, raw water, and treated water	None	None	No	Consistent with NUREG-1801.
3.4.1.41	Stainless steel, copper alloy, and nickel alloy piping, piping components, and piping elements exposed to air – indoor uncontrolled (external)	None	None	No	Consistent with NUREG-1801.
3.4.1.42	Steel piping, piping components, and piping elements exposed to air – indoor controlled (external)	None	None	No	Not applicable. DCPP has no in-scope components in air - indoor controlled (external) in the steam and power conversion systems, so the applicable NUREG-1801 lines were not used.

Table 3.4.1 Summary of Aging Management Evaluations in Chapter VIII of NUREG-1801 for Steam and Power Conversion System (Continued)

Item Number	Component Type	Aging Effect / Mechanism	Aging Management Program	Further Evaluation Recommended	Discussion
3.4.1.43	Steel and stainless steel piping, piping components, and piping elements in concrete	None	None	No	Not applicable. DCPP has no in-scope components in concrete in the steam and power conversion systems, so the applicable NUREG-1801 lines were not used.
3.4.1.44	Steel, stainless steel, aluminum, and copper alloy piping, piping components, and piping elements exposed to gas	None	None	No	Consistent with NUREG-1801.

Table 3.4.2-1 Steam and Power Conversion System – Summary of Aging Management Evaluation – Turbine Steam Supply System

Component Type	Intended Function	Material	Environment	Aging Effect Requiring Management	Aging Management Program	NUREG-1801 Vol. 2 Item	Table 1 Item	Notes
Closure Bolting	PB, SIA	Carbon Steel	Atmosphere/ Weather (Ext)	Loss of preload	Bolting Integrity (B2.1.7)	None	None	H, 1
Closure Bolting	PB, SIA	Carbon Steel	Atmosphere/ Weather (Ext)	Loss of material	Bolting Integrity (B2.1.7)	VIII.H-1	3.4.1.22	B
Closure Bolting	LBS, PB, SIA	Carbon Steel	Plant Indoor Air (Ext)	Loss of material	Bolting Integrity (B2.1.7)	VIII.H-4	3.4.1.22	B
Closure Bolting	LBS, PB, SIA	Carbon Steel	Plant Indoor Air (Ext)	Loss of preload	Bolting Integrity (B2.1.7)	VIII.H-5	3.4.1.22	B
Closure Bolting	LBS, PB, SIA	Stainless Steel	Plant Indoor Air (Ext)	Loss of preload	Bolting Integrity (B2.1.7)	None	None	H, 1
Demineralizer	LBS	Carbon Steel	Plant Indoor Air (Ext)	Loss of material	External Surfaces Monitoring Program (B2.1.20)	VIII.H-7	3.4.1.28	B
Demineralizer	LBS	Carbon Steel	Secondary Water (Int)	Loss of material	Water Chemistry (B2.1.2) and One-Time Inspection (B2.1.16)	VIII.D1-8	3.4.1.04	A
Filter	LBS	Carbon Steel	Plant Indoor Air (Ext)	Loss of material	External Surfaces Monitoring Program (B2.1.20)	VIII.H-7	3.4.1.28	B
Filter	LBS	Carbon Steel	Secondary Water (Int)	Loss of material	Water Chemistry (B2.1.2) and One-Time Inspection (B2.1.16)	VIII.D1-8	3.4.1.04	A
Flow Element	PB, TH	Carbon Steel	Plant Indoor Air (Ext)	Loss of material	External Surfaces Monitoring Program (B2.1.20)	VIII.H-7	3.4.1.28	B

Table 3.4.2-1 Steam and Power Conversion System – Summary of Aging Management Evaluation – Turbine Steam Supply System (Continued)

Component Type	Intended Function	Material	Environment	Aging Effect Requiring Management	Aging Management Program	NUREG-1801 Vol. 2 Item	Table 1 Item	Notes
Flow Element	PB, TH	Carbon Steel	Steam (Int)	Loss of material	Water Chemistry (B2.1.2) and One-Time Inspection (B2.1.16)	VIII.A-16	3.4.1.02	A
Flow Element	PB, TH	Carbon Steel	Steam (Int)	Wall thinning	Flow-Accelerated Corrosion (B2.1.6)	VIII.A-17	3.4.1.29	B
Flow Element	LBS	Stainless Steel	Demineralized Water (Int)	Loss of material	Water Chemistry (B2.1.2) and One-Time Inspection (B2.1.16)	VIII.D1-4	3.4.1.16	A
Flow Element	LBS, PB, SIA, TH	Stainless Steel	Plant Indoor Air (Ext)	None	None	VIII.I-10	3.4.1.41	A
Flow Element	LBS, SIA	Stainless Steel	Secondary Water (Int)	Loss of material	Water Chemistry (B2.1.2) and One-Time Inspection (B2.1.16)	VIII.D1-4	3.4.1.16	A
Flow Element	LBS, SIA	Stainless Steel	Secondary Water (Int)	Cracking	Water Chemistry (B2.1.2) and One-Time Inspection (B2.1.16)	VIII.D1-5	3.4.1.14	A
Flow Element	PB, TH	Stainless Steel	Steam (Int)	Cracking	Water Chemistry (B2.1.2) and One-Time Inspection (B2.1.16)	VIII.A-10	3.4.1.39	E, 4
Flow Element	PB, TH	Stainless Steel	Steam (Int)	Loss of material	Water Chemistry (B2.1.2) and One-Time Inspection (B2.1.16)	VIII.A-12	3.4.1.37	E, 4

Table 3.4.2-1 Steam and Power Conversion System – Summary of Aging Management Evaluation – Turbine Steam Supply System (Continued)

Component Type	Intended Function	Material	Environment	Aging Effect Requiring Management	Aging Management Program	NUREG-1801 Vol. 2 Item	Table 1 Item	Notes
Heat Exchanger (Sample Cooler)	LBS, SIA	Copper Alloy	Closed Cycle Cooling Water (Int)	Loss of material	Closed-Cycle Cooling Water System (B2.1.10)	VIII.E-16	3.4.1.26	D
Heat Exchanger (Sample Cooler)	LBS, SIA	Copper Alloy	Plant Indoor Air (Ext)	None	None	VIII.I-2	3.4.1.41	A
Heat Exchanger (Sample Cooler)	LBS, SIA	Stainless Steel	Closed Cycle Cooling Water (Ext)	Loss of material	Closed-Cycle Cooling Water System (B2.1.10)	VIII.E-2	3.4.1.25	B
Heat Exchanger (Sample Cooler)	LBS, SIA	Stainless Steel	Closed Cycle Cooling Water (Ext)	Reduction of heat transfer	Closed-Cycle Cooling Water System (B2.1.10)	VIII.E-11	3.4.1.27	B
Heat Exchanger (Sample Cooler)	LBS, SIA	Stainless Steel	Plant Indoor Air (Ext)	None	None	VIII.I-10	3.4.1.41	A
Heat Exchanger (Sample Cooler)	LBS, SIA	Stainless Steel	Secondary Water (Int)	Loss of material	Water Chemistry (B2.1.2) and One-Time Inspection (B2.1.16)	VIII.D1-4	3.4.1.16	A

Table 3.4.2-1 Steam and Power Conversion System – Summary of Aging Management Evaluation – Turbine Steam Supply System (Continued)

Component Type	Intended Function	Material	Environment	Aging Effect Requiring Management	Aging Management Program	NUREG-1801 Vol. 2 Item	Table 1 Item	Notes
Heat Exchanger (Sample Cooler)	LBS, SIA	Stainless Steel	Secondary Water (Int)	Cracking	Water Chemistry (B2.1.2) and One-Time Inspection (B2.1.16)	VIII.D1-5	3.4.1.14	A
Indicator	LBS	Carbon Steel	Plant Indoor Air (Ext)	Loss of material	External Surfaces Monitoring Program (B2.1.20)	VIII.H-7	3.4.1.28	B
Indicator	LBS	Carbon Steel	Sodium Hydroxide (Int)	Loss of material	Water Chemistry (B2.1.2) and One-Time Inspection (B2.1.16)	None	None	G, 5
Indicator	LBS	Carbon Steel	Sulfuric Acid (Int)	Loss of material	Inspection of Internal Surfaces in Miscellaneous Piping and Ducting Components (B2.1.22)	None	None	G, 3
Indicator	LBS	Stainless Steel	Demineralized Water (Int)	Loss of material	Water Chemistry (B2.1.2) and One-Time Inspection (B2.1.16)	VIII.D1-4	3.4.1.16	A
Indicator	LBS	Stainless Steel	Plant Indoor Air (Ext)	None	None	VIII.I-10	3.4.1.41	A
Indicator	LBS	Stainless Steel	Secondary Water (Int)	Loss of material	Water Chemistry (B2.1.2) and One-Time Inspection (B2.1.16)	VIII.D1-4	3.4.1.16	A
Indicator	LBS	Stainless Steel	Secondary Water (Int)	Cracking	Water Chemistry (B2.1.2) and One-Time Inspection (B2.1.16)	VIII.D1-5	3.4.1.14	A

Table 3.4.2-1 Steam and Power Conversion System – Summary of Aging Management Evaluation – Turbine Steam Supply System (Continued)

Component Type	Intended Function	Material	Environment	Aging Effect Requiring Management	Aging Management Program	NUREG-1801 Vol. 2 Item	Table 1 Item	Notes
Orifice	LBS, PB, SIA, TH	Stainless Steel	Plant Indoor Air (Ext)	None	None	VIII.I-10	3.4.1.41	A
Orifice	LBS, PB, SIA, TH	Stainless Steel	Secondary Water (Int)	Loss of material	Water Chemistry (B2.1.2) and One-Time Inspection (B2.1.16)	VIII.D1-4	3.4.1.16	A
Orifice	LBS, PB, SIA, TH	Stainless Steel	Secondary Water (Int)	Cracking	Water Chemistry (B2.1.2) and One-Time Inspection (B2.1.16)	VIII.D1-5	3.4.1.14	A
Piping	LBS, PB, SIA	Carbon Steel	Atmosphere/ Weather (Ext)	Loss of material	External Surfaces Monitoring Program (B2.1.20)	VIII.H-8	3.4.1.28	B
Piping	SIA	Carbon Steel	Atmosphere/ Weather (Int)	Loss of material	External Surfaces Monitoring Program (B2.1.20)	VIII.H-8	3.4.1.28	B
Piping	LBS	Carbon Steel	Demineralized Water (Int)	Loss of material	Water Chemistry (B2.1.2) and One-Time Inspection (B2.1.16)	VIII.D1-8	3.4.1.04	A
Piping	PB, SIA	Carbon Steel	Dry Gas (Int)	None	None	VIII.I-15	3.4.1.44	A
Piping	LBS, PB, SIA	Carbon Steel	Plant Indoor Air (Ext)	Loss of material	External Surfaces Monitoring Program (B2.1.20)	VIII.H-7	3.4.1.28	B
Piping	PB	Carbon Steel	Secondary Water (Int)	Cumulative fatigue damage	Time-Limited Aging Analysis evaluated for the period of extended operation	VIII.B1-10	3.4.1.01	A

Table 3.4.2-1 Steam and Power Conversion System – Summary of Aging Management Evaluation – Turbine Steam Supply System (Continued)

Component Type	Intended Function	Material	Environment	Aging Effect Requiring Management	Aging Management Program	NUREG-1801 Vol. 2 Item	Table 1 Item	Notes
Piping	LBS, PB, SIA	Carbon Steel	Secondary Water (Int)	Loss of material	Water Chemistry (B2.1.2) and One-Time Inspection (B2.1.16)	VIII.D1-8	3.4.1.04	A
Piping	LBS, PB, SIA	Carbon Steel	Secondary Water (Int)	Wall thinning	Flow-Accelerated Corrosion (B2.1.6)	VIII.D1-9	3.4.1.29	B
Piping	LBS	Carbon Steel	Sodium Hydroxide (Int)	Loss of material	Water Chemistry (B2.1.2) and One-Time Inspection (B2.1.16)	None	None	G, 5
Piping	LBS, PB, SIA	Carbon Steel	Steam (Int)	Loss of material	Water Chemistry (B2.1.2) and One-Time Inspection (B2.1.16)	VIII.A-16	3.4.1.02	A
Piping	LBS, PB, SIA	Carbon Steel	Steam (Int)	Wall thinning	Flow-Accelerated Corrosion (B2.1.6)	VIII.A-17	3.4.1.29	B
Piping	PB	Carbon Steel	Steam (Int)	Cumulative fatigue damage	Time-Limited Aging Analysis evaluated for the period of extended operation	VIII.B1-10	3.4.1.01	A
Piping	LBS	Carbon Steel	Sulfuric Acid (Int)	Loss of material	Inspection of Internal Surfaces In Miscellaneous Piping and Ducting Components (B2.1.22)	None	None	G, 3
Piping	LBS	Polyvinyl Chloride (PVC)	Plant Indoor Air (Ext)	None	None	None	None	G

Table 3.4.2-1 Steam and Power Conversion System – Summary of Aging Management Evaluation – Turbine Steam Supply System (Continued)

Component Type	Intended Function	Material	Environment	Aging Effect Requiring Management	Aging Management Program	NUREG-1801 Vol. 2 Item	Table 1 Item	Notes
Piping	LBS	Polyvinyl Chloride (PVC)	Sulfuric Acid (Int)	None	None	None	None	G
Piping	LBS	Stainless Steel	Demineralized Water (Int)	Loss of material	Water Chemistry (B2.1.2) and One-Time Inspection (B2.1.16)	VIII.D1-4	3.4.1.16	A
Piping	PB, SIA	Stainless Steel	Dry Gas (Int)	None	None	VIII.I-12	3.4.1.44	A
Piping	LBS, PB, SIA	Stainless Steel	Plant Indoor Air (Ext)	None	None	VIII.I-10	3.4.1.41	A
Piping	LBS, PB, SIA	Stainless Steel	Secondary Water (Int)	Loss of material	Water Chemistry (B2.1.2) and One-Time Inspection (B2.1.16)	VIII.D1-4	3.4.1.16	A
Piping	LBS, PB, SIA	Stainless Steel	Secondary Water (Int)	Cracking	Water Chemistry (B2.1.2) and One-Time Inspection (B2.1.16)	VIII.D1-5	3.4.1.14	A
Piping	LBS	Stainless Steel	Sodium Hydroxide (Int)	Loss of material	Water Chemistry (B2.1.2) and One-Time Inspection (B2.1.16)	None	None	G, 2
Piping	LBS	Stainless Steel	Sulfuric Acid (Int)	Loss of material	Inspection of Internal Surfaces in Miscellaneous Piping and Ducting Components (B2.1.22)	None	None	G

Table 3.4.2-1 Steam and Power Conversion System – Summary of Aging Management Evaluation – Turbine Steam Supply System (Continued)

Component Type	Intended Function	Material	Environment	Aging Effect Requiring Management	Aging Management Program	NUREG-1801 Vol. 2 Item	Table 1 Item	Notes
Pump	LBS	Carbon Steel	Plant Indoor Air (Ext)	Loss of material	External Surfaces Monitoring Program (B2.1.20)	VIII.H-7	3.4.1.28	B
Pump	LBS	Carbon Steel	Sodium Hydroxide (Int)	Loss of material	Water Chemistry (B2.1.2) and One-Time Inspection (B2.1.16)	None	None	G, 5
Pump	LBS	Carbon Steel	Sulfuric Acid (Int)	Loss of material	Inspection of Internal Surfaces in Miscellaneous Piping and Ducting Components (B2.1.22)	None	None	G, 3
Strainer	FIL, PB	Carbon Steel	Plant Indoor Air (Ext)	Loss of material	External Surfaces Monitoring Program (B2.1.20)	VIII.H-7	3.4.1.28	B
Strainer	FIL, PB	Carbon Steel	Secondary Water (Int)	Loss of material	Water Chemistry (B2.1.2) and One-Time Inspection (B2.1.16)	VIII.D1-8	3.4.1.04	A
Tank	LBS, SIA	Carbon Steel	Plant Indoor Air (Ext)	Loss of material	External Surfaces Monitoring Program (B2.1.20)	VIII.H-7	3.4.1.28	B
Tank	LBS, SIA	Carbon Steel	Secondary Water (Int)	Loss of material	Water Chemistry (B2.1.2) and One-Time Inspection (B2.1.16)	VIII.D1-8	3.4.1.04	C
Tank	LBS	Carbon Steel	Sodium Hydroxide (Int)	Loss of material	Water Chemistry (B2.1.2) and One-Time Inspection (B2.1.16)	None	None	G, 5

Table 3.4.2-1 Steam and Power Conversion System – Summary of Aging Management Evaluation – Turbine Steam Supply System (Continued)

Component Type	Intended Function	Material	Environment	Aging Effect Requiring Management	Aging Management Program	NUREG-1801 Vol. 2 Item	Table 1 Item	Notes
Tank	LBS	Carbon Steel	Sulfuric Acid (Int)	Loss of material	Inspection of Internal Surfaces in Miscellaneous Piping and Ducting Components (B2.1.22)	None	None	G, 3
Tank	SIA	Stainless Steel	Plant Indoor Air (Ext)	None	None	VIII.I-10	3.4.1.41	C
Tank	SIA	Stainless Steel	Secondary Water (Int)	Loss of material	Water Chemistry (B2.1.2) and One-Time Inspection (B2.1.16)	VIII.D1-4	3.4.1.16	C
Test Connection	PB	Stainless Steel	Plant Indoor Air (Ext)	None	None	VIII.I-10	3.4.1.41	A
Test Connection	PB	Stainless Steel	Secondary Water (Int)	Loss of material	Water Chemistry (B2.1.2) and One-Time Inspection (B2.1.16)	VIII.D1-4	3.4.1.16	A
Test Connection	PB	Stainless Steel	Steam (Int)	Cracking	Water Chemistry (B2.1.2) and One-Time Inspection (B2.1.16)	VIII.A-10	3.4.1.39	E, 4
Test Connection	PB	Stainless Steel	Steam (Int)	Loss of material	Water Chemistry (B2.1.2) and One-Time Inspection (B2.1.16)	VIII.A-12	3.4.1.37	E, 4
Trap	LBS, PB, SIA	Carbon Steel	Plant Indoor Air (Ext)	Loss of material	External Surfaces Monitoring Program (B2.1.20)	VIII.H-7	3.4.1.28	B

Table 3.4.2-1 Steam and Power Conversion System – Summary of Aging Management Evaluation – Turbine Steam Supply System (Continued)

Component Type	Intended Function	Material	Environment	Aging Effect Requiring Management	Aging Management Program	NUREG-1801 Vol. 2 Item	Table 1 Item	Notes
Trap	LBS, PB, SIA	Carbon Steel	Secondary Water (Int)	Loss of material	Water Chemistry (B2.1.2) and One-Time Inspection (B2.1.16)	VIII.D1-8	3.4.1.04	A
Trap	LBS, PB, SIA	Carbon Steel	Secondary Water (Int)	Wall thinning	Flow-Accelerated Corrosion (B2.1.6)	VIII.D1-9	3.4.1.29	B
Tubing	LBS, PB	Stainless Steel	Plant Indoor Air (Ext)	None	None	VIII.I-10	3.4.1.41	A
Tubing	LBS, PB	Stainless Steel	Secondary Water (Int)	Loss of material	Water Chemistry (B2.1.2) and One-Time Inspection (B2.1.16)	VIII.D1-4	3.4.1.16	A
Tubing	LBS, PB	Stainless Steel	Secondary Water (Int)	Cracking	Water Chemistry (B2.1.2) and One-Time Inspection (B2.1.16)	VIII.D1-5	3.4.1.14	A
Tubing	LBS, PB	Stainless Steel	Steam (Int)	Cracking	Water Chemistry (B2.1.2) and One-Time Inspection (B2.1.16)	VIII.A-10	3.4.1.39	E, 4
Tubing	LBS, PB	Stainless Steel	Steam (Int)	Loss of material	Water Chemistry (B2.1.2) and One-Time Inspection (B2.1.16)	VIII.A-12	3.4.1.37	E, 4
Turbine	PB	Carbon Steel	Plant Indoor Air (Ext)	Loss of material	External Surfaces Monitoring Program (B2.1.20)	VIII.H-7	3.4.1.28	B

Table 3.4.2-1 Steam and Power Conversion System – Summary of Aging Management Evaluation – Turbine Steam Supply System (Continued)

Component Type	Intended Function	Material	Environment	Aging Effect Requiring Management	Aging Management Program	NUREG-1801 Vol. 2 Item	Table 1 Item	Notes
Turbine	PB	Carbon Steel	Plant Indoor Air (Int)	Loss of material	Inspection of Internal Surfaces in Miscellaneous Piping and Ducting Components (B2.1.22)	VIII.B1-7	3.4.1.30	B
Valve	PB, SIA	Carbon Steel	Atmosphere/ Weather (Ext)	Loss of material	External Surfaces Monitoring Program (B2.1.20)	VIII.H-8	3.4.1.28	B
Valve	LBS, SIA	Carbon Steel	Demineralized Water (Int)	Loss of material	Water Chemistry (B2.1.2) and One-Time Inspection (B2.1.16)	VIII.D1-8	3.4.1.04	A
Valve	PB	Carbon Steel	Dry Gas (Int)	None	None	VIII.I-15	3.4.1.44	A
Valve	LBS, PB, SIA	Carbon Steel	Plant Indoor Air (Ext)	Loss of material	External Surfaces Monitoring Program (B2.1.20)	VIII.H-7	3.4.1.28	B
Valve	LBS, PB, SIA	Carbon Steel	Secondary Water (Int)	Loss of material	Water Chemistry (B2.1.2) and One-Time Inspection (B2.1.16)	VIII.D1-8	3.4.1.04	A
Valve	LBS, PB, SIA	Carbon Steel	Secondary Water (Int)	Wall thinning	Flow-Accelerated Corrosion (B2.1.6)	VIII.D1-9	3.4.1.29	B
Valve	LBS, SIA	Carbon Steel	Sodium Hydroxide (Int)	Loss of material	Water Chemistry (B2.1.2) and One-Time Inspection (B2.1.16)	None	None	G, 5

Table 3.4.2-1 Steam and Power Conversion System – Summary of Aging Management Evaluation – Turbine Steam Supply System (Continued)

Component Type	Intended Function	Material	Environment	Aging Effect Requiring Management	Aging Management Program	NUREG-1801 Vol. 2 Item	Table 1 Item	Notes
Valve	LBS, PB, SIA	Carbon Steel	Steam (Int)	Loss of material	Water Chemistry (B2.1.2) and One-Time Inspection (B2.1.16)	VIII.A-16	3.4.1.02	A
Valve	LBS, PB, SIA	Carbon Steel	Steam (Int)	Wall thinning	Flow-Accelerated Corrosion (B2.1.6)	VIII.A-17	3.4.1.29	B
Valve	LBS	Carbon Steel	Sulfuric Acid (Int)	Loss of material	Inspection of Internal Surfaces in Miscellaneous Piping and Ducting Components (B2.1.22)	None	None	G, 3
Valve	LBS	Cast Iron	Plant Indoor Air (Ext)	Loss of material	External Surfaces Monitoring Program (B2.1.20)	VIII.H-7	3.4.1.28	B
Valve	LBS	Cast Iron	Secondary Water (Int)	Loss of material	Water Chemistry (B2.1.2) and One-Time Inspection (B2.1.16)	VIII.D1-8	3.4.1.04	A
Valve	LBS, SIA	Stainless Steel	Demineralized Water (Int)	Loss of material	Water Chemistry (B2.1.2) and One-Time Inspection (B2.1.16)	VIII.D1-4	3.4.1.16	A
Valve	LBS, PB, SIA	Stainless Steel	Plant Indoor Air (Ext)	None	None	VIII.I-10	3.4.1.41	A
Valve	LBS, PB, SIA	Stainless Steel	Secondary Water (Int)	Loss of material	Water Chemistry (B2.1.2) and One-Time Inspection (B2.1.16)	VIII.D1-4	3.4.1.16	A

Table 3.4.2-1 Steam and Power Conversion System – Summary of Aging Management Evaluation – Turbine Steam Supply System (Continued)

Component Type	Intended Function	Material	Environment	Aging Effect Requiring Management	Aging Management Program	NUREG-1801 Vol. 2 Item	Table 1 Item	Notes
Valve	LBS, PB, SIA	Stainless Steel	Secondary Water (Int)	Cracking	Water Chemistry (B2.1.2) and One-Time Inspection (B2.1.16)	VIII.D1-5	3.4.1.14	A
Valve	LBS	Stainless Steel	Sodium Hydroxide (Int)	Loss of material	Water Chemistry (B2.1.2) and One-Time Inspection (B2.1.16)	None	None	G, 2
Valve	PB, SIA	Stainless Steel	Steam (Int)	Cracking	Water Chemistry (B2.1.2) and One-Time Inspection (B2.1.16)	VIII.A-10	3.4.1.39	E, 4
Valve	PB, SIA	Stainless Steel	Steam (Int)	Loss of material	Water Chemistry (B2.1.2) and One-Time Inspection (B2.1.16)	VIII.A-12	3.4.1.37	E, 4
Valve	LBS	Stainless Steel	Sulfuric Acid (Int)	Loss of material	Inspection of Internal Surfaces in Miscellaneous Piping and Ducting Components (B2.1.22)	None	None	G
Valve	LBS	Stainless Steel Cast Austenitic	Plant Indoor Air (Ext)	None	None	VIII.I-10	3.4.1.41	A
Valve	LBS	Stainless Steel Cast Austenitic	Secondary Water (Int)	Loss of material	Water Chemistry (B2.1.2) and One-Time Inspection (B2.1.16)	VIII.D1-4	3.4.1.16	A

Notes for Table 3.4.2-1:

Standard Notes:

A Consistent with NUREG-1801 item for component, material, environment, and aging effect. AMP is consistent with NUREG-1801 AMP.

B Consistent with NUREG-1801 item for component, material, environment, and aging effect. AMP takes some exceptions to NUREG-1801 AMP.

C Component is different, but consistent with NUREG-1801 item for material, environment, and aging effect. AMP is consistent with NUREG-1801 AMP.

D Component is different, but consistent with NUREG-1801 item for material, environment, and aging effect. AMP takes some exceptions to NUREG-1801 AMP.

E Consistent with NUREG-1801 for material, environment, and aging effect, but a different aging management program is credited or NUREG-1801 identifies a plant-specific aging management program.

G Environment not in NUREG-1801 for this component and material.

H Aging effect not in NUREG-1801 for this component, material and environment combination.

Plant Specific Notes:

1 The Loss of Preload aging effect is not identified in NUREG-1801 for this component, material, and environment combination. Loss of preload is managed by the Bolting Integrity program (B2.1.7).

2 There is no NUREG-1801 line for the environment of NaOH. The use of stainless steel up to 200°F and 50 weight-percent NaOH is common in industrial applications with no special consideration for aging. The NaOH concentration is controlled by the Water Chemistry Program. Therefore, Water Chemistry (B2.1.2), augmented by One-Time Inspection (B2.1.16), has been selected as the aging management program.

3 These carbon steel components are located on the sulfuric acid skid used for regeneration of the steam generator blowdown demineralizer resin.

4 The Water Chemistry program (B2.1.2) and the One-Time Inspection program (B2.1.16) manages loss of material due to pitting and crevice corrosion and cracking due to stress corrosion cracking. The One-Time Inspection program (B2.1.16) includes selected components at susceptible locations.

5 There is no NUREG-1801 line for the environment of NaOH. The use of carbon steel up to 200°F and 50 weight-percent NaOH is common in industrial applications with no special consideration for aging. The NaOH concentration is controlled by the Water Chemistry program. Therefore, Water Chemistry (B2.1.2), augmented by One-Time Inspection (B2.1.16), has been selected as the aging management program.

Table 3.4.2-2 Steam and Power Conversion System – Summary of Aging Management Evaluation – Auxiliary Steam System

Component Type	Intended Function	Material	Environment	Aging Effect Requiring Management	Aging Management Program	NUREG-1801 Vol. 2 Item	Table 1 Item	Notes
Bellows	LBS	Carbon Steel	Plant Indoor Air (Ext)	Loss of material	External Surfaces Monitoring Program (B2.1.20)	VIII.H-7	3.4.1.28	B
Bellows	LBS	Carbon Steel	Plant Indoor Air (Int)	Loss of material	Inspection of Internal Surfaces in Miscellaneous Piping and Ducting Components (B2.1.22)	VIII.B1-7	3.4.1.30	B
Bellows	LBS	Stainless Steel	Plant Indoor Air (Ext)	None	None	VIII.I-10	3.4.1.41	A
Bellows	LBS	Stainless Steel	Plant Indoor Air (Int)	Loss of material	Inspection of Internal Surfaces in Miscellaneous Piping and Ducting Components (B2.1.22)	VII.F2-3	3.3.1.72	B
Closure Bolting	LBS, SIA	Carbon Steel	Plant Indoor Air (Ext)	Loss of material	Bolting Integrity (B2.1.7)	VIII.H-4	3.4.1.22	B
Closure Bolting	LBS, SIA	Carbon Steel	Plant Indoor Air (Ext)	Loss of preload	Bolting Integrity (B2.1.7)	VIII.H-5	3.4.1.22	B
Compressor	LBS	Carbon Steel	Lubricating Oil (Int)	Loss of material	Inspection of Internal Surfaces in Miscellaneous Piping and Ducting Components (B2.1.22)	VIII.A-14	3.4.1.07	E, 4

Table 3.4.2-2 Steam and Power Conversion System – Summary of Aging Management Evaluation – Auxiliary Steam System (Continued)

Component Type	Intended Function	Material	Environment	Aging Effect Requiring Management	Aging Management Program	NUREG-1801 Vol. 2 Item	Table 1 Item	Notes
Compressor	LBS	Carbon Steel	Plant Indoor Air (Ext)	Loss of material	External Surfaces Monitoring Program (B2.1.20)	VIII.H-7	3.4.1.28	B
Filter	LBS	Carbon Steel	Lubricating Oil (Int)	Loss of material	Inspection of Internal Surfaces in Miscellaneous Piping and Ducting Components (B2.1.22)	VIII.A-14	3.4.1.07	E, 4
Filter	LBS	Carbon Steel	Plant Indoor Air (Ext)	Loss of material	External Surfaces Monitoring Program (B2.1.20)	VIII.H-7	3.4.1.28	B
Heat Exchanger (Aux Steam Drain Rec Vent Cond)	LBS, SIA	Carbon Steel	Closed Cycle Cooling Water (Int)	Loss of material	Closed-Cycle Cooling Water System (B2.1.10)	VII.F2-9	3.3.1.48	B
Heat Exchanger (Aux Steam Drain Rec Vent Cond)	LBS, SIA	Carbon Steel	Plant Indoor Air (Ext)	Loss of material	External Surfaces Monitoring Program (B2.1.20)	VIII.H-7	3.4.1.28	B

Table 3.4.2-2 Steam and Power Conversion System – Summary of Aging Management Evaluation – Auxiliary Steam System (Continued)

Component Type	Intended Function	Material	Environment	Aging Effect Requiring Management	Aging Management Program	NUREG-1801 Vol. 2 Item	Table 1 Item	Notes
Heat Exchanger (Aux Steam Drain Rec Vent Cond)	LBS, SIA	Carbon Steel	Steam (Int)	Loss of material	Water Chemistry (B2.1.2) and One-Time Inspection (B2.1.16)	VIII.B1-8	3.4.1.37	E, 6
Heat Exchanger (Aux Steam Drain Rec Vent Cond)	LBS, SIA	Carbon Steel	Steam (Int)	Wall thinning	Flow-Accelerated Corrosion (B2.1.6)	VIII.B1-9	3.4.1.29	B
Heat Exchanger (Aux Boiler Sample Cooler)	LBS	Stainless Steel	Plant Indoor Air (Ext)	None	None	VIII.I-10	3.4.1.41	C
Heat Exchanger (Aux Boiler Sample Cooler)	LBS	Stainless Steel	Raw Water (Int)	Loss of material	Open-Cycle Cooling Water System (B2.1.9)	VIII.G-4	3.4.1.33	A
Heat Exchanger (Boiler)	LBS	Carbon Steel	Plant Indoor Air (Ext)	Loss of material	External Surfaces Monitoring Program (B2.1.20)	VIII.H-7	3.4.1.28	B

Table 3.4.2-2 Steam and Power Conversion System – Summary of Aging Management Evaluation – Auxiliary Steam System (Continued)

Component Type	Intended Function	Material	Environment	Aging Effect Requiring Management	Aging Management Program	NUREG-1801 Vol. 2 Item	Table 1 Item	Notes
Heat Exchanger (Boiler)	LBS	Carbon Steel	Raw Water (Int)	Loss of material	Inspection of Internal Surfaces in Miscellaneous Piping and Ducting Components (B2.1.22)	VII.H2-22	3.3.1.76	E, 3
Heat Exchanger (Boiler)	LBS	Copper Alloy	Plant Indoor Air (Ext)	None	None	VIII.I-2	3.4.1.41	C
Heat Exchanger (Boiler)	LBS	Copper Alloy	Secondary Water (Int)	Loss of material	Water Chemistry (B2.1.2) and One-Time Inspection (B2.1.16)	VIII.A-5	3.4.1.15	C
Heat Exchanger (Sample Cooler)	LBS	Copper Alloy	Plant Indoor Air (Ext)	None	None	VIII.I-2	3.4.1.41	C
Heat Exchanger (Sample Cooler)	LBS	Copper Alloy	Secondary Water (Int)	Loss of material	Water Chemistry (B2.1.2) and One-Time Inspection (B2.1.16)	VIII.A-5	3.4.1.15	C
Hose	LBS	Elastomer	Lubricating Oil (Int)	Hardening and loss of strength	Inspection of Internal Surfaces in Miscellaneous Piping and Ducting Components (B2.1.22)	None	None	J, 7

Table 3.4.2-2 Steam and Power Conversion System – Summary of Aging Management Evaluation – Auxiliary Steam System (Continued)

Component Type	Intended Function	Material	Environment	Aging Effect Requiring Management	Aging Management Program	NUREG-1801 Vol. 2 Item	Table 1 Item	Notes
Hose	LBS	Elastomer	Plant Indoor Air (Ext)	Hardening and loss of strength	External Surfaces Monitoring Program (B2.1.20)	VII.F2-7	3.3.1.11	E
Orifice	LBS	Carbon Steel	Fuel Oil (Int)	Loss of material	Inspection of Internal Surfaces in Miscellaneous Piping and Ducting Components (B2.1.22)	VII.H1-10	3.3.1.20	E, 2
Orifice	LBS	Carbon Steel	Plant Indoor Air (Ext)	Loss of material	External Surfaces Monitoring Program (B2.1.20)	VIII.H-7	3.4.1.28	B
Orifice	LBS	Stainless Steel	Plant Indoor Air (Ext)	None	None	VIII.I-10	3.4.1.41	A
Orifice	LBS	Stainless Steel	Steam (Int)	Cracking	Water Chemistry (B2.1.2) and One-Time Inspection (B2.1.16)	VIII.B1-2	3.4.1.39	E, 6
Orifice	LBS	Stainless Steel	Steam (Int)	Loss of material	Water Chemistry (B2.1.2) and One-Time Inspection (B2.1.16)	VIII.B1-3	3.4.1.37	E, 6
Piping	SIA	Carbon Steel	Atmosphere/ Weather (Ext)	Loss of material	External Surfaces Monitoring Program (B2.1.20)	VIII.H-8	3.4.1.28	B
Piping	LBS	Carbon Steel	Demineralized Water (Int)	Loss of material	Water Chemistry (B2.1.2) and One-Time Inspection (B2.1.16)	VIII.B1-11	3.4.1.04	A

Table 3.4.2-2 Steam and Power Conversion System – Summary of Aging Management Evaluation – Auxiliary Steam System (Continued)

Component Type	Intended Function	Material	Environment	Aging Effect Requiring Management	Aging Management Program	NUREG-1801 Vol. 2 Item	Table 1 Item	Notes
Piping	LBS	Carbon Steel	Fuel Oil (Int)	Loss of material	Inspection of Internal Surfaces in Miscellaneous Piping and Ducting Components (B2.1.22)	VII.H1-10	3.3.1.20	E, 2
Piping	LBS	Carbon Steel	Lubricating Oil (Int)	Loss of material	Inspection of Internal Surfaces in Miscellaneous Piping and Ducting Components (B2.1.22)	VIII.A-14	3.4.1.07	E, 4
Piping	LBS, PB, SIA	Carbon Steel	Plant Indoor Air (Ext)	Loss of material	External Surfaces Monitoring Program (B2.1.20)	VIII.H-7	3.4.1.28	B
Piping	LBS, SIA	Carbon Steel	Plant Indoor Air (Int)	Loss of material	Inspection of Internal Surfaces in Miscellaneous Piping and Ducting Components (B2.1.22)	VIII.B1-7	3.4.1.30	B
Piping	LBS	Carbon Steel	Raw Water (Int)	Loss of material	Inspection of Internal Surfaces in Miscellaneous Piping and Ducting Components (B2.1.22)	VIII.G-36	3.4.1.08	E
Piping	LBS	Carbon Steel	Secondary Water (Int)	Loss of material	Water Chemistry (B2.1.2) and One-Time Inspection (B2.1.16)	VIII.B1-11	3.4.1.04	A

Table 3.4.2-2 Steam and Power Conversion System – Summary of Aging Management Evaluation – Auxiliary Steam System (Continued)

Component Type	Intended Function	Material	Environment	Aging Effect Requiring Management	Aging Management Program	NUREG-1801 Vol. 2 Item	Table 1 Item	Notes
Piping	LBS, PB, SIA	Carbon Steel	Steam (Int)	Loss of material	Water Chemistry (B2.1.2) and One-Time Inspection (B2.1.16)	VIII.B1-8	3.4.1.37	E, 6
Piping	LBS, PB, SIA	Carbon Steel	Steam (Int)	Wall thinning	Flow-Accelerated Corrosion (B2.1.6)	VIII.B1-9	3.4.1.29	B
Piping	LBS	Stainless Steel	Plant Indoor Air (Ext)	None	None	VIII.I-10	3.4.1.41	A
Piping	LBS	Stainless Steel	Raw Water (Int)	Loss of material	Inspection of Internal Surfaces in Miscellaneous Piping and Ducting Components (B2.1.22)	VIII.G-30	3.4.1.32	E, 5
Piping	LBS	Stainless Steel	Secondary Water (Int)	Loss of material	Inspection of Internal Surfaces in Miscellaneous Piping and Ducting Components (B2.1.22)	VIII.B1-4	3.4.1.16	E, 1
Piping	LBS	Stainless Steel	Steam (Int)	Cracking	Water Chemistry (B2.1.2) and One-Time Inspection (B2.1.16)	VIII.B1-2	3.4.1.39	E, 6
Piping	LBS	Stainless Steel	Steam (Int)	Loss of material	Water Chemistry (B2.1.2) and One-Time Inspection (B2.1.16)	VIII.B1-3	3.4.1.37	E, 6

Table 3.4.2-2 Steam and Power Conversion System – Summary of Aging Management Evaluation – Auxiliary Steam System (Continued)

Component Type	Intended Function	Material	Environment	Aging Effect Requiring Management	Aging Management Program	NUREG-1801 Vol. 2 Item	Table 1 Item	Notes
Pump	LBS	Carbon Steel	Lubricating Oil (Int)	Loss of material	Inspection of Internal Surfaces in Miscellaneous Piping and Ducting Components (B2.1.22)	VIII.G-35	3.4.1.07	E, 4
Pump	LBS	Carbon Steel	Plant Indoor Air (Ext)	Loss of material	External Surfaces Monitoring Program (B2.1.20)	VIII.H-7	3.4.1.28	B
Pump	LBS	Cast Iron	Plant Indoor Air (Ext)	Loss of material	External Surfaces Monitoring Program (B2.1.20)	VIII.H-7	3.4.1.28	B
Pump	LBS	Cast Iron	Raw Water (Int)	Loss of material	Inspection of Internal Surfaces in Miscellaneous Piping and Ducting Components (B2.1.22)	VIII.G-36	3.4.1.08	E
Pump	LBS	Ductile Iron	Plant Indoor Air (Ext)	Loss of material	External Surfaces Monitoring Program (B2.1.20)	VIII.H-7	3.4.1.28	B
Pump	LBS	Ductile Iron	Secondary Water (Int)	Loss of material	Water Chemistry (B2.1.2) and One-Time Inspection (B2.1.16)	VIII.B1-11	3.4.1.04	A
Pump	LBS	Stainless Steel	Plant Indoor Air (Ext)	None	None	VIII.I-10	3.4.1.41	A

Table 3.4.2-2 Steam and Power Conversion System – Summary of Aging Management Evaluation – Auxiliary Steam System (Continued)

Component Type	Intended Function	Material	Environment	Aging Effect Requiring Management	Aging Management Program	NUREG-1801 Vol. 2 Item	Table 1 Item	Notes
Pump	LBS	Stainless Steel	Raw Water (Int)	Loss of material	Inspection of Internal Surfaces in Miscellaneous Piping and Ducting Components (B2.1.22)	VIII.G-30	3.4.1.32	E, 5
Pump	LBS	Stainless Steel	Secondary Water (Int)	Loss of material	Water Chemistry (B2.1.2) and One-Time Inspection (B2.1.16)	VIII.B1-4	3.4.1.16	A
Sample Sink	LBS	Carbon Steel	Plant Indoor Air (Ext)	Loss of material	External Surfaces Monitoring Program (B2.1.20)	VIII.H-7	3.4.1.28	B
Sample Sink	LBS	Carbon Steel	Raw Water (Int)	Loss of material	Inspection of Internal Surfaces in Miscellaneous Piping and Ducting Components (B2.1.22)	VIII.G-36	3.4.1.08	E
Sight Gauge	LBS	Carbon Steel	Lubricating Oil (Int)	Loss of material	Inspection of Internal Surfaces in Miscellaneous Piping and Ducting Components (B2.1.22)	VIII.A-14	3.4.1.07	E, 4
Sight Gauge	LBS	Carbon Steel	Plant Indoor Air (Ext)	Loss of material	External Surfaces Monitoring Program (B2.1.20)	VIII.H-7	3.4.1.28	B

Table 3.4.2-2 Steam and Power Conversion System – Summary of Aging Management Evaluation – Auxiliary Steam System (Continued)

Component Type	Intended Function	Material	Environment	Aging Effect Requiring Management	Aging Management Program	NUREG-1801 Vol. 2 Item	Table 1 Item	Notes
Sight Gauge	LBS	Carbon Steel	Raw Water (Int)	Loss of material	Inspection of Internal Surfaces in Miscellaneous Piping and Ducting Components (B2.1.22)	VIII.G-36	3.4.1.08	E
Sight Gauge	LBS	Glass	Lubricating Oil (Int)	None	None	VIII.I-6	3.4.1.40	A
Sight Gauge	LBS	Glass	Plant Indoor Air (Ext)	None	None	VIII.I-5	3.4.1.40	A
Sight Gauge	LBS	Glass	Raw Water (Int)	None	None	VIII.I-7	3.4.1.40	A
Strainer	LBS	Carbon Steel	Fuel Oil (Int)	Loss of material	Inspection of Internal Surfaces in Miscellaneous Piping and Ducting Components (B2.1.22)	VII.H1-10	3.3.1.20	E, 2
Strainer	LBS	Carbon Steel	Lubricating Oil (Int)	Loss of material	Inspection of Internal Surfaces in Miscellaneous Piping and Ducting Components (B2.1.22)	VIII.A-14	3.4.1.07	E, 4
Strainer	LBS	Carbon Steel	Plant Indoor Air (Ext)	Loss of material	External Surfaces Monitoring Program (B2.1.20)	VIII.H-7	3.4.1.28	B

Table 3.4.2-2 Steam and Power Conversion System – Summary of Aging Management Evaluation – Auxiliary Steam System (Continued)

Component Type	Intended Function	Material	Environment	Aging Effect Requiring Management	Aging Management Program	NUREG-1801 Vol. 2 Item	Table 1 Item	Notes
Strainer	LBS	Carbon Steel	Raw Water (Int)	Loss of material	Inspection of Internal Surfaces in Miscellaneous Piping and Ducting Components (B2.1.22)	VIII.G-36	3.4.1.08	E
Strainer	LBS	Carbon Steel	Secondary Water (Int)	Loss of material	Water Chemistry (B2.1.2) and One-Time Inspection (B2.1.16)	VIII.B1-11	3.4.1.04	A
Strainer	LBS	Cast Iron	Plant Indoor Air (Ext)	Loss of material	External Surfaces Monitoring Program (B2.1.20)	VIII.H-7	3.4.1.28	B
Strainer	LBS	Cast Iron	Steam (Int)	Loss of material	Water Chemistry (B2.1.2) and One-Time Inspection (B2.1.16)	VIII.B1-8	3.4.1.37	E, 6
Strainer	LBS	Cast Iron	Steam (Int)	Wall thinning	Flow-Accelerated Corrosion (B2.1.6)	VIII.B1-9	3.4.1.29	B
Strainer	LBS	Stainless Steel	Demineralized Water (Int)	Loss of material	Water Chemistry (B2.1.2) and One-Time Inspection (B2.1.16)	VIII.B1-4	3.4.1.16	A
Strainer	LBS	Stainless Steel	Fuel Oil (Int)	Loss of material	Inspection of Internal Surfaces in Miscellaneous Piping and Ducting Components (B2.1.22)	VII.H1-6	3.3.1.32	E, 2
Strainer	LBS	Stainless Steel	Plant Indoor Air (Ext)	None	None	VIII.I-10	3.4.1.41	A

Table 3.4.2-2 Steam and Power Conversion System – Summary of Aging Management Evaluation – Auxiliary Steam System (Continued)

Component Type	Intended Function	Material	Environment	Aging Effect Requiring Management	Aging Management Program	NUREG-1801 Vol. 2 Item	Table 1 Item	Notes
Strainer	LBS	Stainless Steel	Raw Water (Int)	Loss of material	Inspection of Internal Surfaces in Miscellaneous Piping and Ducting Components (B2.1.22)	VIII.G-30	3.4.1.32	E, 5
Switch	LBS	Carbon Steel	Plant Indoor Air (Ext)	Loss of material	External Surfaces Monitoring Program (B2.1.20)	VIII.H-7	3.4.1.28	B
Switch	LBS	Carbon Steel	Raw Water (Int)	Loss of material	Inspection of Internal Surfaces in Miscellaneous Piping and Ducting Components (B2.1.22)	VIII.G-36	3.4.1.08	E
Tank	LBS	Carbon Steel	Lubricating Oil (Int)	Loss of material	Inspection of Internal Surfaces in Miscellaneous Piping and Ducting Components (B2.1.22)	VIII.A-14	3.4.1.07	E, 4
Tank	LBS	Carbon Steel	Plant Indoor Air (Ext)	Loss of material	External Surfaces Monitoring Program (B2.1.20)	VIII.H-7	3.4.1.28	B
Tank	LBS	Carbon Steel	Secondary Water (Int)	Loss of material	Water Chemistry (B2.1.2) and One-Time Inspection (B2.1.16)	VIII.G-41	3.4.1.06	A

Table 3.4.2-2 Steam and Power Conversion System – Summary of Aging Management Evaluation – Auxiliary Steam System (Continued)

Component Type	Intended Function	Material	Environment	Aging Effect Requiring Management	Aging Management Program	NUREG-1801 Vol. 2 Item	Table 1 Item	Notes
Tank	LBS	Lexan (Thermoplastics)	Plant Indoor Air (Ext)	None	None	None	None	F
Tank	LBS	Lexan (Thermoplastics)	Raw Water (Int)	None	None	None	None	F
Test Connection	LBS	Carbon Steel	Plant Indoor Air (Ext)	Loss of material	External Surfaces Monitoring Program (B2.1.20)	VIII.H-7	3.4.1.28	B
Test Connection	LBS	Carbon Steel	Secondary Water (Int)	Loss of material	Water Chemistry (B2.1.2) and One-Time Inspection (B2.1.16)	VIII.B1-11	3.4.1.04	A
Test Connection	LBS	Stainless Steel	Plant Indoor Air (Ext)	None	None	VIII.I-10	3.4.1.41	A
Test Connection	LBS	Stainless Steel	Raw Water (Int)	Loss of material	Inspection of Internal Surfaces in Miscellaneous Piping and Ducting Components (B2.1.22)	VIII.G-30	3.4.1.32	E, 5
Trap	LBS	Carbon Steel	Lubricating Oil (Int)	Loss of material	Inspection of Internal Surfaces in Miscellaneous Piping and Ducting Components (B2.1.22)	VIII.G-35	3.4.1.07	E, 4

Table 3.4.2-2 Steam and Power Conversion System – Summary of Aging Management Evaluation – Auxiliary Steam System (Continued)

Component Type	Intended Function	Material	Environment	Aging Effect Requiring Management	Aging Management Program	NUREG-1801 Vol. 2 Item	Table 1 Item	Notes
Trap	LBS, SIA	Carbon Steel	Plant Indoor Air (Ext)	Loss of material	External Surfaces Monitoring Program (B2.1.20)	VIII.H-7	3.4.1.28	B
Trap	LBS, SIA	Carbon Steel	Steam (Int)	Loss of material	Water Chemistry (B2.1.2) and One-Time Inspection (B2.1.16)	VIII.B1-8	3.4.1.37	E, 6
Trap	LBS, SIA	Carbon Steel	Steam (Int)	Wall thinning	Flow-Accelerated Corrosion (B2.1.6)	VIII.B1-9	3.4.1.29	B
Tubing	LBS	Carbon Steel	Plant Indoor Air (Ext)	Loss of material	External Surfaces Monitoring Program (B2.1.20)	VIII.H-7	3.4.1.28	B
Tubing	LBS	Carbon Steel	Secondary Water (Int)	Loss of material	Water Chemistry (B2.1.2) and One-Time Inspection (B2.1.16)	VIII.B1-11	3.4.1.04	A
Tubing	LBS	Stainless Steel	Plant Indoor Air (Ext)	None	None	VIII.I-10	3.4.1.41	A
Tubing	LBS	Stainless Steel	Secondary Water (Int)	Loss of material	Water Chemistry (B2.1.2) and One-Time Inspection (B2.1.16)	VIII.B1-4	3.4.1.16	A
Valve	LBS	Carbon Steel	Demineralized Water (Int)	Loss of material	Water Chemistry (B2.1.2) and One-Time Inspection (B2.1.16)	VIII.B1-11	3.4.1.04	A

Table 3.4.2-2 Steam and Power Conversion System – Summary of Aging Management Evaluation – Auxiliary Steam System (Continued)

Component Type	Intended Function	Material	Environment	Aging Effect Requiring Management	Aging Management Program	NUREG-1801 Vol. 2 Item	Table 1 Item	Notes
Valve	LBS	Carbon Steel	Fuel Oil (Int)	Loss of material	Inspection of Internal Surfaces in Miscellaneous Piping and Ducting Components (B2.1.22)	VII.H1-10	3.3.1.20	E, 2
Valve	LBS	Carbon Steel	Lubricating Oil (Int)	Loss of material	Inspection of Internal Surfaces in Miscellaneous Piping and Ducting Components (B2.1.22)	VIII.A-14	3.4.1.07	E, 4
Valve	LBS, PB, SIA	Carbon Steel	Plant Indoor Air (Ext)	Loss of material	External Surfaces Monitoring Program (B2.1.20)	VIII.H-7	3.4.1.28	B
Valve	LBS	Carbon Steel	Plant Indoor Air (Int)	Loss of material	Inspection of Internal Surfaces in Miscellaneous Piping and Ducting Components (B2.1.22)	VIII.B1-7	3.4.1.30	B
Valve	LBS	Carbon Steel	Raw Water (Int)	Loss of material	Inspection of Internal Surfaces in Miscellaneous Piping and Ducting Components (B2.1.22)	VIII.G-36	3.4.1.08	E
Valve	LBS	Carbon Steel	Secondary Water (Int)	Loss of material	Water Chemistry (B2.1.2) and One-Time Inspection (B2.1.16)	VIII.B1-11	3.4.1.04	A

Table 3.4.2-2 Steam and Power Conversion System – Summary of Aging Management Evaluation – Auxiliary Steam System (Continued)

Component Type	Intended Function	Material	Environment	Aging Effect Requiring Management	Aging Management Program	NUREG-1801 Vol. 2 Item	Table 1 Item	Notes
Valve	LBS, SIA	Carbon Steel	Secondary Water (Int)	Loss of material	Water Chemistry (B2.1.2) and One-Time Inspection (B2.1.16)	VIII.G-38	3.4.1.04	A
Valve	LBS, SIA	Carbon Steel	Secondary Water (Int)	Wall thinning	Flow-Accelerated Corrosion (B2.1.6)	VIII.G-39	3.4.1.29	B
Valve	LBS, PB, SIA	Carbon Steel	Steam (Int)	Loss of material	Water Chemistry (B2.1.2) and One-Time Inspection (B2.1.16)	VIII.B1-8	3.4.1.37	E, 6
Valve	LBS, PB, SIA	Carbon Steel	Steam (Int)	Wall thinning	Flow-Accelerated Corrosion (B2.1.6)	VIII.B1-9	3.4.1.29	B
Valve	LBS	Cast Iron	Plant Indoor Air (Ext)	Loss of material	External Surfaces Monitoring Program (B2.1.20)	VIII.H-7	3.4.1.28	B
Valve	LBS	Cast Iron	Raw Water (Int)	Loss of material	Inspection of Internal Surfaces in Miscellaneous Piping and Ducting Components (B2.1.22)	VIII.G-36	3.4.1.08	E
Valve	LBS	Copper Alloy	Fuel Oil (Int)	Loss of material	Inspection of Internal Surfaces in Miscellaneous Piping and Ducting Components (B2.1.22)	VII.H1-3	3.3.1.32	E, 2

Table 3.4.2-2 Steam and Power Conversion System – Summary of Aging Management Evaluation – Auxiliary Steam System (Continued)

Component Type	Intended Function	Material	Environment	Aging Effect Requiring Management	Aging Management Program	NUREG-1801 Vol. 2 Item	Table 1 Item	Notes
Valve	LBS	Copper Alloy	Lubricating Oil (Int)	Loss of material	Inspection of Internal Surfaces in Miscellaneous Piping and Ducting Components (B2.1.22)	VIII.A-3	3.4.1.18	E, 4
Valve	LBS	Copper Alloy	Plant Indoor Air (Ext)	None	None	VIII.I-2	3.4.1.41	A
Valve	LBS	Copper Alloy	Raw Water (Int)	Loss of material	Inspection of Internal Surfaces in Miscellaneous Piping and Ducting Components (B2.1.22)	VIII.A-4	3.4.1.32	E, 5
Valve	LBS	Copper Alloy	Secondary Water (Int)	Loss of material	Water Chemistry (B2.1.2) and One-Time Inspection (B2.1.16)	VIII.A-5	3.4.1.15	A
Valve	LBS	Copper Alloy (> 15% Zinc)	Lubricating Oil (Int)	Loss of material	Inspection of Internal Surfaces in Miscellaneous Piping and Ducting Components (B2.1.22)	VIII.A-3	3.4.1.18	E, 4
Valve	LBS	Copper Alloy (> 15% Zinc)	Plant Indoor Air (Ext)	None	None	VIII.I-2	3.4.1.41	A
Valve	LBS	Copper Alloy (> 15% Zinc)	Raw Water (Int)	Loss of material	Selective Leaching of Materials (B2.1.17)	VIII.A-6	3.4.1.35	A

Table 3.4.2-2 Steam and Power Conversion System – Summary of Aging Management Evaluation – Auxiliary Steam System (Continued)

Component Type	Intended Function	Material	Environment	Aging Effect Requiring Management	Aging Management Program	NUREG-1801 Vol. 2 Item	Table 1 Item	Notes
Valve	LBS	Copper Alloy (Aluminum > 8%)	Dry Gas (Int)	None	None	VIII.I-3	3.4.1.44	A
Valve	LBS	Copper Alloy (Aluminum > 8%)	Fuel Oil (Int)	Loss of material	Inspection of Internal Surfaces in Miscellaneous Piping and Ducting Components (B2.1.22)	VII.H1-3	3.3.1.32	E, 2
Valve	LBS	Copper Alloy (Aluminum > 8%)	Lubricating Oil (Int)	Loss of material	Inspection of Internal Surfaces in Miscellaneous Piping and Ducting Components (B2.1.22)	VIII.A-3	3.4.1.18	E, 4
Valve	LBS	Copper Alloy (Aluminum > 8%)	Plant Indoor Air (Ext)	None	None	VIII.I-2	3.4.1.41	A
Valve	LBS	Copper Alloy (Aluminum > 8%)	Raw Water (Int)	Loss of material	Inspection of Internal Surfaces in Miscellaneous Piping and Ducting Components (B2.1.22)	VIII.A-4	3.4.1.32	E, 5
Valve	LBS	Stainless Steel	Fuel Oil (Int)	Loss of material	Inspection of Internal Surfaces in Miscellaneous Piping and Ducting Components (B2.1.22)	VII.H1-6	3.3.1.32	E, 2

Table 3.4.2-2 Steam and Power Conversion System – Summary of Aging Management Evaluation – Auxiliary Steam System (Continued)

Component Type	Intended Function	Material	Environment	Aging Effect Requiring Management	Aging Management Program	NUREG-1801 Vol. 2 Item	Table 1 Item	Notes
Valve	LBS	Stainless Steel	Plant Indoor Air (Ext)	None	None	VIII.I-10	3.4.1.41	A
Valve	LBS	Stainless Steel	Raw Water (Int)	Loss of material	Inspection of Internal Surfaces in Miscellaneous Piping and Ducting Components (B2.1.22)	VIII.G-30	3.4.1.32	E, 5
Valve	LBS	Stainless Steel	Steam (Int)	Cracking	Water Chemistry (B2.1.2) and One-Time Inspection (B2.1.16)	VIII.B1-2	3.4.1.39	E, 6
Valve	LBS	Stainless Steel	Steam (Int)	Loss of material	Water Chemistry (B2.1.2) and One-Time Inspection (B2.1.16)	VIII.B1-3	3.4.1.37	E, 6

Notes for Table 3.4.2-2:

Standard Notes:

A Consistent with NUREG-1801 item for component, material, environment, and aging effect. AMP is consistent with NUREG-1801 AMP.

B Consistent with NUREG-1801 item for component, material, environment, and aging effect. AMP takes some exceptions to NUREG-1801 AMP.

C Component is different, but consistent with NUREG-1801 item for material, environment, and aging effect. AMP is consistent with NUREG-1801 AMP.

D Component is different, but consistent with NUREG-1801 item for material, environment, and aging effect. AMP takes some exceptions to NUREG-1801 AMP.

E Consistent with NUREG-1801 for material, environment, and aging effect, but a different aging management program is credited or NUREG-1801 identifies a plant-specific aging management program.
F Material not in NUREG-1801 for this component.
J Neither the component nor the material and environment combination is evaluated in NUREG-1801.

Plant Specific Notes:
1 Component is abandoned-in-place; thus the Water Chemistry aging management program does not apply.
2 The in-scope auxiliary steam system components which may have a fuel oil environment are abandoned-in-place. Thus, the Fuel Oil Chemistry aging management program does not apply.
3 The auxiliary steam boiler 0-1 and piping, which may have a raw water environment is abandoned-in-place. Thus, the Open-Cycle Cooling Water System aging management program does not apply.
4 The in-scope auxiliary steam system components which may have a lubricating oil environment are abandoned-in-place. Thus, the Lubricating Oil Analysis aging management program does not apply.
5 The in-scope auxiliary steam system components which may have a raw water environment are abandoned-in-place. Thus, the Open-Cycle Cooling Water System aging management program does not apply.
6 The Water Chemistry program (B2.1.2) and the One-Time Inspection program (B2.1.16) manages loss of material due to pitting and crevice corrosion and cracking due to stress corrosion cracking. The One-Time Inspection program (B2.1.16) includes selected components at susceptible locations.
7 Hardening and Loss of Strength is conservatively considered to be applicable for all elastomer hoses with a lubricating oil environment.

Table 3.4.2-3 Steam and Power Conversion System – Summary of Aging Management Evaluation – Feedwater System

Component Type	Intended Function	Material	Environment	Aging Effect Requiring Management	Aging Management Program	NUREG-1801 Vol. 2 Item	Table 1 Item	Notes
Closure Bolting	PB, SIA	Carbon Steel	Atmosphere/ Weather (Ext)	Loss of preload	Bolting Integrity (B2.1.7)	None	None	H, 1
Closure Bolting	PB, SIA	Carbon Steel	Atmosphere/ Weather (Ext)	Loss of material	Bolting Integrity (B2.1.7)	VIII.H-1	3.4.1.22	B
Closure Bolting	LBS, PB, SIA	Carbon Steel	Plant Indoor Air (Ext)	Loss of material	Bolting Integrity (B2.1.7)	VIII.H-4	3.4.1.22	B
Closure Bolting	LBS, PB, SIA	Carbon Steel	Plant Indoor Air (Ext)	Loss of preload	Bolting Integrity (B2.1.7)	VIII.H-5	3.4.1.22	B
Flow Element	PB, TH	Carbon Steel	Atmosphere/ Weather (Ext)	Loss of material	External Surfaces Monitoring Program (B2.1.20)	VIII.H-8	3.4.1.28	B
Flow Element	PB, TH	Carbon Steel	Plant Indoor Air (Ext)	Loss of material	External Surfaces Monitoring Program (B2.1.20)	VIII.H-7	3.4.1.28	B
Flow Element	PB, TH	Carbon Steel	Secondary Water (Int)	Loss of material	Water Chemistry (B2.1.2) and One-Time Inspection (B2.1.16)	VIII.D1-8	3.4.1.04	A
Flow Element	PB, TH	Stainless Steel	Atmosphere/ Weather (Ext)	Loss of material	External Surfaces Monitoring Program (B2.1.20)	None	None	G
Flow Element	PB, TH	Stainless Steel	Plant Indoor Air (Ext)	None	None	VIII.I-10	3.4.1.41	A
Flow Element	PB, TH	Stainless Steel	Secondary Water (Int)	Loss of material	Water Chemistry (B2.1.2) and One-Time Inspection (B2.1.16)	VIII.D1-4	3.4.1.16	A

Table 3.4.2-3 Steam and Power Conversion System – Summary of Aging Management Evaluation – Feedwater System (Continued)

Component Type	Intended Function	Material	Environment	Aging Effect Requiring Management	Aging Management Program	NUREG-1801 Vol. 2 Item	Table 1 Item	Notes
Flow Element	PB, TH	Stainless Steel	Secondary Water (Int)	Cracking	Water Chemistry (B2.1.2) and One-Time Inspection (B2.1.16)	VIII.D1-5	3.4.1.14	A
Heat Exchanger (Feedwater Heater)	SIA	Carbon Steel	Plant Indoor Air (Ext)	Loss of material	External Surfaces Monitoring Program (B2.1.20)	VIII.H-7	3.4.1.28	B
Heat Exchanger (Feedwater Heater)	SIA	Carbon Steel	Secondary Water (Int)	Loss of material	Water Chemistry (B2.1.2) and One-Time Inspection (B2.1.16)	VIII.D1-8	3.4.1.04	A
Heat Exchanger (Sample Cooler)	LBS, SIA	Copper Alloy	Closed-Cycle Cooling Water (Int)	Loss of material	Closed-Cycle Cooling Water System (B2.1.10)	VIII.G-18	3.4.1.26	D
Heat Exchanger (Sample Cooler)	LBS, SIA	Copper Alloy	Plant Indoor Air (Ext)	None	None	VIII.I-2	3.4.1.41	C
Piping	PB, SIA	Carbon Steel	Atmosphere/ Weather (Ext)	Loss of material	External Surfaces Monitoring Program (B2.1.20)	VIII.H-8	3.4.1.28	B
Piping	LBS, PB, SIA	Carbon Steel	Plant Indoor Air (Ext)	Loss of material	External Surfaces Monitoring Program (B2.1.20)	VIII.H-7	3.4.1.28	B

Table 3.4.2-3 Steam and Power Conversion System – Summary of Aging Management Evaluation – Feedwater System (Continued)

Component Type	Intended Function	Material	Environment	Aging Effect Requiring Management	Aging Management Program	NUREG-1801 Vol. 2 Item	Table 1 Item	Notes
Piping	PB	Carbon Steel	Secondary Water (Int)	Cumulative fatigue damage	Time-Limited Aging Analysis evaluated for the period of extended operation	VIII.D1-7	3.4.1.01	A
Piping	LBS, PB, SIA	Carbon Steel	Secondary Water (Int)	Loss of material	Water Chemistry (B2.1.2) and One-Time Inspection (B2.1.16)	VIII.D1-8	3.4.1.04	A
Pump	SIA	Stainless Steel Cast Austenitic	Plant Indoor Air (Ext)	None	None	VIII.I-10	3.4.1.41	A
Pump	SIA	Stainless Steel Cast Austenitic	Secondary Water (Int)	Loss of material	Water Chemistry (B2.1.2) and One-Time Inspection (B2.1.16)	VIII.D1-4	3.4.1.16	A
Pump	SIA	Stainless Steel Cast Austenitic	Secondary Water (Int)	Cracking	Water Chemistry (B2.1.2) and One-Time Inspection (B2.1.16)	VIII.D1-5	3.4.1.14	A
Tubing	PB	Stainless Steel	Atmosphere/ Weather (Ext)	Loss of material	External Surfaces Monitoring Program (B2.1.20)	None	None	G
Tubing	LBS, PB	Stainless Steel	Plant Indoor Air (Ext)	None	None	VIII.I-10	3.4.1.41	A
Tubing	LBS, PB	Stainless Steel	Secondary Water (Int)	Loss of material	Water Chemistry (B2.1.2) and One-Time Inspection (B2.1.16)	VIII.D1-4	3.4.1.16	A

Table 3.4.2-3 Steam and Power Conversion System – Summary of Aging Management Evaluation – Feedwater System (Continued)

Component Type	Intended Function	Material	Environment	Aging Effect Requiring Management	Aging Management Program	NUREG-1801 Vol. 2 Item	Table 1 Item	Notes
Tubing	LBS, PB	Stainless Steel	Secondary Water (Int)	Cracking	Water Chemistry (B2.1.2) and One-Time Inspection (B2.1.16)	VIII.D1-5	3.4.1.14	A
Valve	PB, SIA	Carbon Steel	Atmosphere/ Weather (Ext)	Loss of material	External Surfaces Monitoring Program (B2.1.20)	VIII.H-8	3.4.1.28	B
Valve	LBS, PB, SIA	Carbon Steel	Plant Indoor Air (Ext)	Loss of material	External Surfaces Monitoring Program (B2.1.20)	VIII.H-7	3.4.1.28	B
Valve	LBS, PB, SIA	Carbon Steel	Secondary Water (Int)	Loss of material	Water Chemistry (B2.1.2) and One-Time Inspection (B2.1.16)	VIII.D1-8	3.4.1.04	A
Valve	PB	Stainless Steel	Atmosphere/ Weather (Ext)	Loss of material	External Surfaces Monitoring Program (B2.1.20)	None	None	G
Valve	PB	Stainless Steel	Plant Indoor Air (Ext)	None	None	VIII.I-10	3.4.1.41	A
Valve	PB	Stainless Steel	Secondary Water (Int)	Loss of material	Water Chemistry (B2.1.2) and One-Time Inspection (B2.1.16)	VIII.D1-4	3.4.1.16	A
Valve	PB	Stainless Steel	Secondary Water (Int)	Cracking	Water Chemistry (B2.1.2) and One-Time Inspection (B2.1.16)	VIII.D1-5	3.4.1.14	A

Notes for Table 3.4.2-3:

Standard Notes:

A Consistent with NUREG-1801 item for component, material, environment, and aging effect. AMP is consistent with NUREG-1801 AMP.

B Consistent with NUREG-1801 item for component, material, environment, and aging effect. AMP takes some exceptions to NUREG-1801 AMP.

C Component is different, but consistent with NUREG-1801 item for material, environment, and aging effect. AMP is consistent with NUREG-1801 AMP.

D Component is different, but consistent with NUREG-1801 item for material, environment, and aging effect. AMP takes some exceptions to NUREG-1801 AMP.

G Environment not in NUREG-1801 for this component and material.

H Aging effect not in NUREG-1801 for this component, material and environment combination.

Plant Specific Notes:

1 The Loss of preload aging effect is not identified in NUREG-1801 for this component, material, and environment combination. Loss of preload is managed by the Bolting Integrity program (B2.1.7).

Table 3.4.2-4 Steam and Power Conversion System – Summary of Aging Management Evaluation – Condensate System

Component Type	Intended Function	Material	Environment	Aging Effect Requiring Management	Aging Management Program	NUREG-1801 Vol. 2 Item	Table 1 Item	Notes
Closure Bolting	LBS, PB	Carbon Steel	Plant Indoor Air (Ext)	Loss of material	Bolting Integrity (B2.1.7)	VIII.H-4	3.4.1.22	B
Closure Bolting	LBS, PB	Carbon Steel	Plant Indoor Air (Ext)	Loss of preload	Bolting Integrity (B2.1.7)	VIII.H-5	3.4.1.22	B
Heat Exchanger (Main Condenser)	PB	Carbon Steel	Plant Indoor Air (Ext)	Loss of material	External Surfaces Monitoring Program (B2.1.20)	VIII.H-7	3.4.1.28	B
Heat Exchanger (Main Condenser)	PB	Carbon Steel	Secondary Water (Int)	Loss of material	Inspection of Internal Surfaces in Miscellaneous Piping and Ducting Components (B2.1.22)	VIII.E-37	3.4.1.03	E, 1
Heat Exchanger (Main Condenser)	PB	Carbon Steel	Steam (Int)	Loss of material	Inspection of Internal Surfaces in Miscellaneous Piping and Ducting Components (B2.1.22)	VIII.A-16	3.4.1.02	E, 1
Piping	LBS, SIA	Carbon Steel	Atmosphere/ Weather (Ext)	Loss of material	External Surfaces Monitoring Program (B2.1.20)	VIII.H-8	3.4.1.28	B
Piping	LBS	Carbon Steel	Plant Indoor Air (Ext)	Loss of material	External Surfaces Monitoring Program (B2.1.20)	VIII.H-7	3.4.1.28	B

Table 3.4.2-4 Steam and Power Conversion System – Summary of Aging Management Evaluation – Condensate System (Continued)

Component Type	Intended Function	Material	Environment	Aging Effect Requiring Management	Aging Management Program	NUREG-1801 Vol. 2 Item	Table 1 Item	Notes
Piping	PB	Carbon Steel	Plant Indoor Air (Ext)	Loss of material	External Surfaces Monitoring Program (B2.1.20)	VIII.H-7	3.4.1.28	B
Piping	LBS	Carbon Steel	Raw Water (Int)	Loss of material	Inspection of Internal Surfaces in Miscellaneous Piping and Ducting Components (B2.1.22)	VIII.G-36	3.4.1.08	E, 2
Piping	LBS, PB, SIA	Carbon Steel	Secondary Water (Int)	Loss of material	Water Chemistry (B2.1.2) and One-Time Inspection (B2.1.16)	VIII.E-34	3.4.1.04	A
Pump	LBS	Carbon Steel	Plant Indoor Air (Ext)	Loss of material	External Surfaces Monitoring Program (B2.1.20)	VIII.H-7	3.4.1.28	B
Pump	LBS	Carbon Steel	Raw Water (Int)	Loss of material	Inspection of Internal Surfaces in Miscellaneous Piping and Ducting Components (B2.1.22)	VIII.G-36	3.4.1.08	E, 2
Pump	LBS	Carbon Steel	Secondary Water (Int)	Loss of material	Water Chemistry (B2.1.2) and One-Time Inspection (B2.1.16)	VIII.E-34	3.4.1.04	A
Sight Gauge	LBS	Copper Alloy	Plant Indoor Air (Ext)	None	None	VIII.I-2	3.4.1.41	A

Table 3.4.2-4 Steam and Power Conversion System – Summary of Aging Management Evaluation – Condensate System (Continued)

Component Type	Intended Function	Material	Environment	Aging Effect Requiring Management	Aging Management Program	NUREG-1801 Vol. 2 Item	Table 1 Item	Notes
Sight Gauge	LBS	Copper Alloy	Raw Water (Int)	Loss of material	Inspection of Internal Surfaces in Miscellaneous Piping and Ducting Components (B2.1.22)	VIII.E-18	3.4.1.32	E, 2
Sight Gauge	LBS	Copper Alloy	Secondary Water (Int)	Loss of material	Water Chemistry (B2.1.2) and One-Time Inspection (B2.1.16)	VIII.A-5	3.4.1.15	A
Sight Gauge	LBS	Glass	Plant Indoor Air (Ext)	None	None	VIII.I-5	3.4.1.40	A
Sight Gauge	LBS	Glass	Secondary Water (Int)	None	None	VIII.I-8	3.4.1.40	A
Valve	PB	Carbon Steel	Plant Indoor Air (Ext)	Loss of material	External Surfaces Monitoring Program (B2.1.20)	VIII.H-7	3.4.1.28	B
Valve	LBS	Carbon Steel	Plant Indoor Air (Ext)	Loss of material	External Surfaces Monitoring Program (B2.1.20)	VIII.H-7	3.4.1.28	B
Valve	LBS	Carbon Steel	Raw Water (Int)	Loss of material	Inspection of Internal Surfaces in Miscellaneous Piping and Ducting Components (B2.1.22)	VIII.G-36	3.4.1.08	E, 2
Valve	LBS, PB	Carbon Steel	Secondary Water (Int)	Loss of material	Water Chemistry (B2.1.2) and One-Time Inspection (B2.1.16)	VIII.E-34	3.4.1.04	A

Table 3.4.2-4 Steam and Power Conversion System – Summary of Aging Management Evaluation – Condensate System (Continued)

Component Type	Intended Function	Material	Environment	Aging Effect Requiring Management	Aging Management Program	NUREG-1801 Vol. 2 Item	Table 1 Item	Notes
Valve	PB	Cast Iron	Plant Indoor Air (Ext)	Loss of material	External Surfaces Monitoring Program (B2.1.20)	VIII.H-7	3.4.1.28	B
Valve	PB	Cast Iron	Secondary Water (Int)	Loss of material	Water Chemistry (B2.1.2) and One-Time Inspection (B2.1.16)	VIII.E-34	3.4.1.04	A
Valve	PB	Cast Iron	Secondary Water (Int)	Wall thinning	Flow-Accelerated Corrosion (B2.1.6)	VIII.E-35	3.4.1.29	B
Valve	LBS	Copper Alloy	Plant Indoor Air (Ext)	None	None	VIII.I-2	3.4.1.41	A
Valve	LBS	Copper Alloy	Secondary Water (Int)	Loss of material	Water Chemistry (B2.1.2) and One-Time Inspection (B2.1.16)	VIII.A-5	3.4.1.15	A
Valve	PB	Stainless Steel	Plant Indoor Air (Ext)	None	None	VIII.I-10	3.4.1.41	A
Valve	PB	Stainless Steel	Secondary Water (Int)	Loss of material	Water Chemistry (B2.1.2) and One-Time Inspection (B2.1.16)	VIII.E-29	3.4.1.16	A

Notes for Table 3.4.2-4:

Standard Notes:

A Consistent with NUREG-1801 item for component, material, environment, and aging effect. AMP is consistent with NUREG-1801 AMP.

B Consistent with NUREG-1801 item for component, material, environment, and aging effect. AMP takes some exceptions to NUREG-1801 AMP.

C Component is different, but consistent with NUREG-1801 item for material, environment, and aging effect. AMP is consistent with NUREG-1801 AMP.

D Component is different, but consistent with NUREG-1801 item for material, environment, and aging effect. AMP takes some exceptions to NUREG-1801 AMP.

E Consistent with NUREG-1801 for material, environment, and aging effect, but a different aging management program is credited or NUREG-1801 identifies a plant-specific aging management program.

Plant Specific Notes:

1 A different aging management program is credited for the main condenser shell and hotwell internal surfaces. The aging of main condenser shell and hotwell internal surfaces exposed to the treated water and steam environment is managed by Inspection of Internal Surfaces in Miscellaneous Piping and Ducting Components program (B2.1.22) to provide periodic inspection. Use of the Water Chemistry program (B2.1.2) and the One-Time Inspection program (B2.1.16) is not deemed appropriate due to DCPP operating experience supporting anticipated condenser wall thickness reduction.

2 The in-scope condensate system components which may have a raw water environment are abandoned-in-place. Thus, the Open-Cycle Cooling Water System aging management program does not apply.

Table 3.4.2-5 Steam and Power Conversion System – Summary of Aging Management Evaluation – Auxiliary Feedwater System

Component Type	Intended Function	Material	Environment	Aging Effect Requiring Management	Aging Management Program	NUREG-1801 Vol. 2 Item	Table 1 Item	Notes
Closure Bolting	LBS, PB, SIA	Carbon Steel	Plant Indoor Air (Ext)	Loss of material	Bolting Integrity (B2.1.7)	VIII.H-4	3.4.1.22	B
Closure Bolting	LBS, PB, SIA	Carbon Steel	Plant Indoor Air (Ext)	Loss of preload	Bolting Integrity (B2.1.7)	VIII.H-5	3.4.1.22	B
Closure Bolting	LBS, PB, SIA	Stainless Steel	Plant Indoor Air (Ext)	Loss of preload	Bolting Integrity (B2.1.7)	None	None	H, 1
Closure Bolting	LBS, PB, SIA	Stainless Steel	Plant Indoor Air (Ext)	None	None	VIII.I-10	3.4.1.41	A
Flow Element	PB	Carbon Steel	Plant Indoor Air (Ext)	Loss of material	External Surfaces Monitoring Program (B2.1.20)	VIII.H-7	3.4.1.28	B
Flow Element	PB	Carbon Steel	Secondary Water (Int)	Loss of material	Water Chemistry (B2.1.2) and One-Time Inspection (B2.1.16)	VIII.G-38	3.4.1.04	A
Flow Element	PB, TH	Stainless Steel	Plant Indoor Air (Ext)	None	None	VIII.I-10	3.4.1.41	A
Flow Element	PB, TH	Stainless Steel	Secondary Water (Int)	Loss of material	Water Chemistry (B2.1.2) and One-Time Inspection (B2.1.16)	VIII.G-32	3.4.1.16	A
Heat Exchanger (Aux Feedwater Turbine Oil Cooler)	HT, PB	Copper Alloy	Lubricating Oil (Ext)	Reduction of heat transfer	Lubricating Oil Analysis (B2.1.23) and One-Time Inspection (B2.1.16)	VIII.G-8	3.4.1.10	B

Table 3.4.2-5 Steam and Power Conversion System – Summary of Aging Management Evaluation – Auxiliary Feedwater System (Continued)

Component Type	Intended Function	Material	Environment	Aging Effect Requiring Management	Aging Management Program	NUREG-1801 Vol. 2 Item	Table 1 Item	Notes
Heat Exchanger (Aux Feedwater Turbine Oil Cooler)	HT, PB	Copper Alloy	Lubricating Oil (Ext)	Loss of material	Lubricating Oil Analysis (B2.1.23) and One-Time Inspection (B2.1.16)	VIII.G-19	3.4.1.18	B
Heat Exchanger (Aux Feedwater Turbine Oil Cooler)	PB	Copper Alloy	Lubricating Oil (Int)	Loss of material	Lubricating Oil Analysis (B2.1.23) and One-Time Inspection (B2.1.16)	VIII.G-19	3.4.1.18	B
Heat Exchanger (Aux Feedwater Turbine Oil Cooler)	PB	Copper Alloy	Plant Indoor Air (Ext)	None	None	VIII.I-2	3.4.1.41	C
Heat Exchanger (Aux Feedwater Turbine Oil Cooler)	HT, PB	Copper Alloy	Secondary Water (Int)	Loss of material	Water Chemistry (B2.1.2) and One-Time Inspection (B2.1.16)	VIII.A-5	3.4.1.15	A

Table 3.4.2-5 Steam and Power Conversion System – Summary of Aging Management Evaluation – Auxiliary Feedwater System (Continued)

Component Type	Intended Function	Material	Environment	Aging Effect Requiring Management	Aging Management Program	NUREG-1801 Vol. 2 Item	Table 1 Item	Notes
Heat Exchanger (Aux Feedwater Turbine Oil Cooler)	HT, PB	Copper Alloy	Secondary Water (Int)	Reduction of heat transfer	Water Chemistry (B2.1.2) and One-Time Inspection (B2.1.16)	VIII.G-10	3.4.1.09	A
Orifice	LBS, PB, SIA, TH	Stainless Steel	Plant Indoor Air (Ext)	None	None	VIII.I-10	3.4.1.41	A
Orifice	LBS, PB, SIA, TH	Stainless Steel	Secondary Water (Int)	Loss of material	Water Chemistry (B2.1.2) and One-Time Inspection (B2.1.16)	VIII.G-32	3.4.1.16	A
Piping	PB	Carbon Steel	Demineralized Water (Int)	Loss of material	Water Chemistry (B2.1.2) and One-Time Inspection (B2.1.16)	VIII.G-38	3.4.1.04	A
Piping	PB	Carbon Steel	Lubricating Oil (Int)	Loss of material	Lubricating Oil Analysis (B2.1.23) and One-Time Inspection (B2.1.16)	VIII.G-35	3.4.1.07	B
Piping	LBS, PB, SIA	Carbon Steel	Plant Indoor Air (Ext)	Loss of material	External Surfaces Monitoring Program (B2.1.20)	VIII.H-7	3.4.1.28	B
Piping	PB	Carbon Steel	Raw Water (Int)	Loss of material	Inspection of Internal Surfaces in Miscellaneous Piping and Ducting Components (B2.1.22)	VIII.G-36	3.4.1.08	E

Table 3.4.2-5 Steam and Power Conversion System – Summary of Aging Management Evaluation – Auxiliary Feedwater System (Continued)

Component Type	Intended Function	Material	Environment	Aging Effect Requiring Management	Aging Management Program	NUREG-1801 Vol. 2 Item	Table 1 Item	Notes
Piping	PB	Carbon Steel	Secondary Water (Int)	Cumulative fatigue damage	Time-Limited Aging Analysis evaluated for the period of extended operation	VIII.G-37	3.4.1.01	A
Piping	LBS, PB, SIA	Carbon Steel	Secondary Water (Int)	Loss of material	Water Chemistry (B2.1.2) and One-Time Inspection (B2.1.16)	VIII.G-38	3.4.1.04	A
Piping	LBS, SIA	Stainless Steel	Demineralized Water (Int)	Loss of material	Water Chemistry (B2.1.2) and One-Time Inspection (B2.1.16)	VIII.G-32	3.4.1.16	A
Piping	LBS, PB, SIA	Stainless Steel	Plant Indoor Air (Ext)	None	None	VIII.I-10	3.4.1.41	A
Piping	LBS, PB, SIA	Stainless Steel	Secondary Water (Int)	Loss of material	Water Chemistry (B2.1.2) and One-Time Inspection (B2.1.16)	VIII.G-32	3.4.1.16	A
Pump	LBS, SIA	Stainless Steel	Demineralized Water (Int)	Loss of material	Water Chemistry (B2.1.2) and One-Time Inspection (B2.1.16)	VIII.G-32	3.4.1.16	A
Pump	LBS, SIA	Stainless Steel	Plant Indoor Air (Ext)	None	None	VIII.I-10	3.4.1.41	A
Pump	PB	Stainless Steel Cast Austenitic	Plant Indoor Air (Ext)	None	None	VIII.I-10	3.4.1.41	A
Pump	PB	Stainless Steel Cast Austenitic	Secondary Water (Int)	Loss of material	Water Chemistry (B2.1.2) and One-Time Inspection (B2.1.16)	VIII.G-32	3.4.1.16	A

Table 3.4.2-5 Steam and Power Conversion System – Summary of Aging Management Evaluation – Auxiliary Feedwater System (Continued)

Component Type	Intended Function	Material	Environment	Aging Effect Requiring Management	Aging Management Program	NUREG-1801 Vol. 2 Item	Table 1 Item	Notes
Sight Gauge	LBS	Glass	Demineralized Water (Int)	None	None	VIII.I-8	3.4.1.40	A
Sight Gauge	LBS	Glass	Plant Indoor Air (Ext)	None	None	VIII.I-5	3.4.1.40	A
Strainer	LBS	Stainless Steel	Demineralized Water (Int)	Loss of material	Water Chemistry (B2.1.2) and One-Time Inspection (B2.1.16)	VIII.G-32	3.4.1.16	A
Strainer	LBS	Stainless Steel	Plant Indoor Air (Ext)	None	None	VIII.I-10	3.4.1.41	A
Tank	LBS	Plexiglass	Demineralized Water (Int)	None	None	None	None	F
Tank	LBS	Plexiglass	Plant Indoor Air (Ext)	None	None	None	None	F
Tank	LBS	Stainless Steel	Demineralized Water (Int)	Loss of material	Water Chemistry (B2.1.2) and One-Time Inspection (B2.1.16)	VIII.G-41	3.4.1.06	A
Tank	LBS	Stainless Steel	Plant Indoor Air (Ext)	None	None	VIII.I-10	3.4.1.41	A
Tubing	LBS, PB	Stainless Steel	Plant Indoor Air (Ext)	None	None	VIII.I-10	3.4.1.41	A
Tubing	LBS, PB	Stainless Steel	Secondary Water (Int)	Loss of material	Water Chemistry (B2.1.2) and One-Time Inspection (B2.1.16)	VIII.G-32	3.4.1.16	A
Valve	LBS	Carbon Steel	Demineralized Water (Int)	Loss of material	Water Chemistry (B2.1.2) and One-Time Inspection (B2.1.16)	VIII.G-38	3.4.1.04	A

Table 3.4.2-5 Steam and Power Conversion System – Summary of Aging Management Evaluation – Auxiliary Feedwater System (Continued)

Component Type	Intended Function	Material	Environment	Aging Effect Requiring Management	Aging Management Program	NUREG-1801 Vol. 2 Item	Table 1 Item	Notes
Valve	PB	Carbon Steel	Lubricating Oil (Int)	Loss of material	Lubricating Oil Analysis (B2.1.23) and One-Time Inspection (B2.1.16)	VIII.G-35	3.4.1.07	B
Valve	LBS, PB, SIA	Carbon Steel	Plant Indoor Air (Ext)	Loss of material	External Surfaces Monitoring Program (B2.1.20)	VIII.H-7	3.4.1.28	B
Valve	PB	Carbon Steel	Raw Water (Int)	Loss of material	Inspection of Internal Surfaces in Miscellaneous Piping and Ducting Components (B2.1.22)	VIII.G-36	3.4.1.08	E
Valve	LBS, PB, SIA	Carbon Steel	Secondary Water (Int)	Loss of material	Water Chemistry (B2.1.2) and One-Time Inspection (B2.1.16)	VIII.G-38	3.4.1.04	A
Valve	LBS, SIA	Stainless Steel	Demineralized Water (Int)	Loss of material	Water Chemistry (B2.1.2) and One-Time Inspection (B2.1.16)	VIII.G-32	3.4.1.16	A
Valve	LBS, PB, SIA	Stainless Steel	Plant Indoor Air (Ext)	None	None	VIII.I-10	3.4.1.41	A
Valve	LBS, PB, SIA	Stainless Steel	Secondary Water (Int)	Loss of material	Water Chemistry (B2.1.2) and One-Time Inspection (B2.1.16)	VIII.G-32	3.4.1.16	A

Notes for Table 3.4.2-5:

Standard Notes:

A Consistent with NUREG-1801 item for component, material, environment, and aging effect. AMP is consistent with NUREG-1801 AMP.

B Consistent with NUREG-1801 item for component, material, environment, and aging effect. AMP takes some exceptions to NUREG-1801 AMP.

C Component is different, but consistent with NUREG-1801 item for material, environment, and aging effect. AMP is consistent with NUREG-1801 AMP.

E Consistent with NUREG-1801 for material, environment, and aging effect, but a different aging management program is credited or NUREG-1801 identifies a plant-specific aging management program.

F Material not in NUREG-1801 for this component.

H Aging effect not in NUREG-1801 for this component, material and environment combination.

Plant Specific Notes:

1 The Loss of Preload aging effect is not identified in NUREG-1801 for this component, material, and environment combination. Loss of preload is managed by the Bolting Integrity program (B2.1.7).

3.5 AGING MANAGEMENT OF CONTAINMENTS, STRUCTURES AND COMPONENT SUPPORTS

3.5.1 Introduction

Section 3.5 provides the results of the aging management reviews (AMRs) for those component types identified in Section 2.4, Scoping and Screening Results – Structures, subject to AMR. The structures are described in the following sections:

- Containment building (Section 2.4.1)
- Control room (located in auxiliary building) (Section 2.4.2)
- Auxiliary building (Section 2.4.3)
- Turbine building (Section 2.4.4)
- Radwaste storage facilities (Section 2.4.5)
- Pipeway structure (Section 2.4.6)
- Diesel fuel oil pump vaults and structures (Section 2.4.7)
- 230 kV Switchyard, 500 kV Switchyard, and electrical foundations and structures (Section 2.4.8)
- Fuel handling building (Section 2.4.9)
- Intake structure and intake control building (Section 2.4.10)
- Earthwork and yard structures (Section 2.4.11)
- Discharge structure (Section 2.4.12)
- Outdoor water storage tank foundations and encasements (Section 2.4.13)
- Supports (Section 2.4.14)

Table 3.5.1, Summary of Aging Management Evaluations in Chapters II and III of NUREG-1801 for Containments, Structures, and Component Supports, provides the summary of the programs evaluated in NUREG-1801 that are applicable to component types in this Section. Table 3.5.1 uses the format of Table 1 described in Section 3.0.

3.5.2 Results

The following tables summarize the results of the AMR for the structures and commodities in the containments, structures and component supports area:

- Table 3.5.2-1 Containments, Structures, and Component Supports - Summary of Aging Management Evaluation - Containment Building
- Table 3.5.2-2 Containments, Structures, and Component Supports - Summary of Aging Management Evaluation - Control Room
- Table 3.5.2-3 Containments, Structures, and Component Supports - Summary of Aging Management Evaluation - Auxiliary Building
- Table 3.5.2-4 Containments, Structures, and Component Supports - Summary of Aging Management Evaluation - Turbine Building
- Table 3.5.2-5 Containments, Structures, and Component Supports - Summary of Aging Management Evaluation - Radwaste Storage Facilities
- Table 3.5.2-6 Containments, Structures, and Component Supports - Summary of Aging Management Evaluation - Pipeway Structure
- Table 3.5.2-7 Containments, Structures, and Component Supports - Summary of Aging Management Evaluation – Diesel Fuel Oil Pump Vaults and Structures
- Table 3.5.2-8 Containments, Structures, and Component Supports - Summary of Aging Management Evaluation – 230 kV Switchyard, 500 kV Switchyard, and Electrical Foundations and Structures
- Table 3.5.2-9 Containments, Structures, and Component Supports - Summary of Aging Management Evaluation – Fuel Handling Building
- Table 3.5.2-10 Containments, Structures, and Component Supports - Summary of Aging Management Evaluation – Intake Structure and Intake Control Building
- Table 3.5.2-11 Containments, Structures, and Component Supports - Summary of Aging Management Evaluation – Earthwork and Yard Structures
- Table 3.5.2-12 Containments, Structures, and Component Supports - Summary of Aging Management Evaluation – Discharge Structure

- Table 3.5.2-13 Containments, Structures, and Component Supports - Summary of Aging Management Evaluation – Outdoor Water Storage Tank Foundations and Encasements
- Table 3.5.2-14 Containments, Structures, and Component Supports - Summary of Aging Management Evaluation - Supports

These tables use the format of Table 2 discussed in Section 3.0.

3.5.2.1 Materials, Environments, Aging Effects Requiring Management and Aging Management Programs

The materials from which the component types are fabricated, the environments to which they are exposed, the potential aging effects requiring management, and the aging management programs used to manage these aging effects are provided for each of the above structures and commodities in the following subsections.

3.5.2.1.1 Containment Building

Materials

The materials of construction for the containment building component types are:

- Carbon Steel
- Concrete
- Elastomer
- Fire Barrier (Cementitious Coating)
- Fire Barrier (Ceramic Fiber)
- Stainless Steel

Environment

The containment building component types are exposed to the following environments:

- Atmosphere/ Weather (Structural)
- Buried (Structural)
- Encased in Concrete
- Plant Indoor Air (Structural)

- Submerged (Structural)

Aging Effects Requiring Management

The following containment building aging effects require management:

- Concrete cracking and spalling
- Cracking
- Cracking due to expansion
- Cracking, loss of bond, and loss of material (spalling, scaling)
- Cracks and distortion
- Increase in porosity and permeability, cracking, loss of material (spalling, scaling)
- Increase in porosity, permeability
- Loss of leak tightness
- Loss of material
- Loss of material (spalling, scaling) and cracking
- Loss of material, cracking
- Loss of sealing; Leakage through containment

Aging Management Programs

The following aging management programs manage the aging effects for the containment building component types:

- 10 CFR Part 50, Appendix J (B2.1.30)
- ASME Section XI, Subsection IWE (B2.1.27)
- ASME Section XI, Subsection IWL (B2.1.28)
- Fire Protection (B2.1.12)
- Structures Monitoring Program (B2.1.32)
- Water Chemistry (B2.1.2)

3.5.2.1.2 Control Room (located in auxiliary building)

Materials

The materials of construction for the control room component types are:

- Carbon Steel
- Concrete
- Elastomer

Environment

The control room component types are exposed to the following environments:

- Atmosphere/ Weather (Structural)
- Encased in Concrete
- Plant Indoor Air (Structural)

Aging Effects Requiring Management

The following control room aging effects require management:

- Concrete cracking and spalling
- Cracking due to expansion
- Cracking, loss of bond, and loss of material (spalling, scaling)
- Increase in porosity and permeability, cracking, loss of material (spalling, scaling)
- Increased hardness, shrinkage and loss of strength
- Loss of material
- Loss of sealing

Aging Management Programs

The following aging management programs manage the aging effects for the control room component types:

- Fire Protection (B2.1.12)
- Structures Monitoring Program (B2.1.32)

3.5.2.1.3 Auxiliary Building

Materials

The materials of construction for the auxiliary building component types are:

- Carbon Steel
- Concrete
- Concrete Block (Masonry Walls)
- Elastomer
- Gypsum/Plaster

Environment

The auxiliary building component types are exposed to the following environments:

- Atmosphere/ Weather (Structural)
- Buried (Structural)
- Encased in Concrete
- Plant Indoor Air (Structural)

Aging Effects Requiring Management

The following auxiliary building aging effects require management:

- Concrete cracking and spalling
- Cracking
- Cracking due to expansion
- Cracking, loss of bond, and loss of material (spalling, scaling)
- Cracks and distortion
- Increase in porosity and permeability, cracking, loss of material (spalling, scaling)
- Increase in porosity and permeability, loss of strength
- Increased hardness, shrinkage and loss of strength
- Loss of material

- Loss of material (spalling, scaling) and cracking
- Loss of sealing

Aging Management Programs

The following aging management programs manage the aging effects for the auxiliary building component types:

- Fire Protection (B2.1.12)
- Masonry Wall Program (B2.1.31)
- Structures Monitoring Program (B2.1.32)

3.5.2.1.4 Turbine Building

Materials

The materials of construction for the turbine building component types are:

- Carbon Steel
- Concrete
- Concrete Block (Masonry Walls)
- Elastomer
- Fire Barrier (Cementitious Coating)
- Gypsum/Plaster

Environment

The turbine building component types are exposed to the following environments:

- Atmosphere/ Weather (Structural)
- Buried (Structural)
- Encased in Concrete
- Plant Indoor Air (Structural)

Aging Effects Requiring Management

The following turbine building aging effects require management:

- Concrete cracking and spalling

- Cracking
- Cracking due to expansion
- Cracking, loss of bond, and loss of material (spalling, scaling)
- Cracks and distortion
- Increase in porosity and permeability, cracking, loss of material (spalling, scaling)
- Increased hardness, shrinkage and loss of strength
- Loss of material
- Loss of material (spalling, scaling) and cracking
- Loss of material, cracking
- Loss of sealing

Aging Management Programs

The following aging management programs manage the aging effects for the turbine building component types:

- Fire Protection (B2.1.12)
- Masonry Wall Program (B2.1.31)
- Structures Monitoring Program (B2.1.32)

3.5.2.1.5 Radwaste Storage Facilities

Materials

The materials of construction for the radwaste storage facilities component types are:

- Carbon Steel
- Concrete

Environment

The radwaste storage facilities component types are exposed to the following environments:

- Atmosphere/ Weather (Structural)

- Buried (Structural)
- Plant Indoor Air (Structural)

Aging Effects Requiring Management

The following radwaste storage facilities aging effects require management:

- Cracking due to expansion
- Cracking, loss of bond, and loss of material (spalling, scaling)
- Cracks and distortion
- Increase in porosity and permeability, cracking, loss of material (spalling, scaling)
- Loss of material
- Loss of material (spalling, scaling) and cracking

Aging Management Programs

The following aging management programs manage the aging effects for the radwaste storage facilities component types:

- Structures Monitoring Program (B2.1.32)

3.5.2.1.6 Pipeway Structure

Materials

The materials of construction for the pipeway structure component types are:

- Carbon Steel

Environment

The pipeway structure component types are exposed to the following environments:

- Atmosphere/ Weather (Structural)
- Encased in Concrete

Aging Effects Requiring Management

The following pipeway structure aging effects require management:

- Loss of material

Aging Management Programs

The following aging management programs manage the aging effects for the pipeway structure component types:

- Structures Monitoring Program (B2.1.32)

3.5.2.1.7 Diesel Fuel Oil Pump Vaults and Structures

Materials

The materials of construction for the diesel fuel oil pump vaults and structures component types are:

- Carbon Steel
- Concrete
- Elastomer

Environment

The diesel fuel oil pump vaults and structures component types are exposed to the following environments:

- Atmosphere/ Weather (Structural)
- Buried (Structural)
- Encased in Concrete
- Plant Indoor Air (Structural)

Aging Effects Requiring Management

The following diesel fuel oil pump vaults and structures aging effects require management:

- Concrete cracking and spalling
- Cracking due to expansion
- Cracking, loss of bond, and loss of material (spalling, scaling)
- Cracks and distortion
- Increase in porosity and permeability, cracking, loss of material (spalling, scaling)

- Loss of material
- Loss of material (spalling, scaling) and cracking
- Loss of sealing

Aging Management Programs

The following aging management programs manage the aging effects for the diesel fuel oil pump vaults and structures component types:

- Fire Protection (B2.1.12)
- Structures Monitoring Program (B2.1.32)

3.5.2.1.8 230 kV Switchyard, 500 kV Switchyard, and Electrical Foundations and Structures

Materials

The materials of construction for the 230 kV Switchyard, 500 kV Switchyard, and electrical foundations and structures component types are:

- Carbon Steel
- Concrete
- Elastomer
- Gypsum/Plaster

Environment

The 230 kV Switchyard, 500 kV Switchyard, and electrical foundations and structures component types are exposed to the following environments:

- Atmosphere/ Weather (Structural)
- Buried (Structural)
- Encased in Concrete
- Plant Indoor Air (Structural)

Aging Effects Requiring Management

The following 230 kV Switchyard, 500 kV Switchyard, and electrical foundations and structures aging effects require management:

- Cracking
- Cracking due to expansion
- Cracking, loss of bond, and loss of material (spalling, scaling)
- Cracks and distortion
- Increase in porosity and permeability, cracking, loss of material (spalling, scaling)
- Loss of material
- Loss of material (spalling, scaling) and cracking
- Loss of sealing

Aging Management Programs

The following aging management program manages the aging effects for the 230 kV Switchyard, 500 kV Switchyard, and electrical foundations and structures component types:

- Fire Protection (B2.1.12)
- Structures Monitoring Program (B2.1.32)

3.5.2.1.9 Fuel Handling Building

Materials

The materials of construction for the fuel handling building component types are:

- Carbon Steel
- Concrete
- Elastomer
- Gypsum/Plaster
- Stainless Steel

Environment

The fuel handling building component types are exposed to the following environments:

- Atmosphere/ Weather (Structural)

- Buried (Structural)
- Encased in Concrete
- Plant Indoor Air (Structural)
- Submerged (Structural)

Aging Effects Requiring Management

The following fuel handling building aging effects require management:

- Concrete cracking and spalling
- Cracking
- Cracking due to expansion
- Cracking, loss of bond, and loss of material (spalling, scaling)
- Cracks and distortion
- Increase in porosity and permeability, cracking, loss of material (spalling, scaling)
- Increase in porosity and permeability, loss of strength
- Increased hardness, shrinkage and loss of strength
- Loss of material
- Loss of material (spalling, scaling) and cracking
- Loss of sealing

Aging Management Programs

The following aging management programs manage the aging effects for the fuel handling building component types:

- Fire Protection (B2.1.12)
- Structures Monitoring Program (B2.1.32)
- Water Chemistry (B2.1.2)

3.5.2.1.10 Intake Structure and Intake Control Building

Materials

The materials of construction for the intake structure and intake control building component types are:

- Aluminum
- Carbon Steel
- Concrete
- Concrete Block (Masonry Walls)
- Elastomer
- Stainless Steel

Environment

The intake structure and intake control building component types are exposed to the following environments:

- Atmosphere/ Weather (Structural)
- Buried (Structural)
- Encased in Concrete
- Plant Indoor Air (Structural)
- Submerged (Structural)

Aging Effects Requiring Management

The following intake structure and intake control building aging effects require management:

- Concrete cracking and spalling
- Cracking
- Cracking due to expansion
- Cracking, loss of bond, and loss of material (spalling, scaling)
- Cracks and distortion

- Increase in porosity and permeability, cracking, loss of material (spalling, scaling)
- Increase in porosity and permeability, loss of strength
- Loss of material
- Loss of material (spalling, scaling) and cracking
- Loss of sealing

Aging Management Programs

The following aging management programs manage the aging effects for the intake structure and intake control building component types:

- Fire Protection (B2.1.12)
- Masonry Wall Program (B2.1.31)
- RG 1.127, Inspection of Water-Control Structures Associated with Nuclear Power Plants (B2.1.33)
- Structures Monitoring Program (B2.1.32)

3.5.2.1.11 Earthwork and Yard Structures

Materials

The materials of construction for earthwork and yard structures component types are:

- Carbon Steel
- Concrete
- Earthfill (rip-rap, stone, soil)
- Elastomer

Environment

The earthwork and yard structures component types are exposed to the following environments:

- Atmosphere/ Weather (Structural)
- Buried (Structural)

- Encased in Concrete
- Submerged (Structural)

Aging Effects Requiring Management

The following earthwork and yard structures aging effects require management:

- Cracking due to expansion
- Cracking, loss of bond, and loss of material (spalling, scaling)
- Cracks and distortion
- Increase in porosity and permeability, cracking, loss of material (spalling, scaling)
- Increase in porosity and permeability, loss of strength
- Loss of material
- Loss of material (spalling, scaling) and cracking
- Loss of material, loss of form
- Loss of sealing

Aging Management Programs

The following aging management program manages the aging effects for the earthwork and yard structures component types:

- RG 1.127, Inspection of Water-Control Structures Associated with Nuclear Power Plants (B2.1.33)
- Structures Monitoring Program (B2.1.32)

3.5.2.1.12 Discharge Structure

Materials

The materials of construction for the discharge structure component types are:

- Concrete

Environment

The discharge structure component types are exposed to the following environments:

- Atmosphere/ Weather (Structural)
- Buried (Structural)
- Submerged (Structural)

Aging Effects Requiring Management

The following discharge structure aging effects require management:

- Cracking due to expansion
- Cracking, loss of bond, and loss of material (spalling, scaling)
- Cracks and distortion
- Increase in porosity and permeability, cracking, loss of material (spalling, scaling)
- Increase in porosity and permeability, loss of strength
- Loss of material
- Loss of material (spalling, scaling) and cracking

Aging Management Programs

The following aging management programs manage the aging effects for the Discharge Structure component types:

- RG 1.127, Inspection of Water-Control Structures Associated with Nuclear Power Plants (B2.1.33)
- Structures Monitoring Program (B2.1.32)

3.5.2.1.13 Outdoor Water Storage Tank Foundations and Encasements

Materials

The materials of construction for the outdoor water storage tank foundations and encasements component types are:

- Carbon Steel
- Concrete

Environment

The outdoor water storage tank foundations and encasements component types are exposed to the following environments:

- Atmosphere/ Weather (Structural)
- Buried (Structural)
- Encased in Concrete

Aging Effects Requiring Management

The following outdoor water storage tank foundations and encasements aging effects require management:

- Concrete cracking and spalling
- Cracking due to expansion
- Cracking, loss of bond, and loss of material (spalling, scaling)
- Cracks and distortion
- Increase in porosity and permeability, cracking, loss of material (spalling, scaling)
- Loss of material
- Loss of material (spalling, scaling) and cracking

Aging Management Programs

The following aging management programs manage the aging effects for the outdoor water storage tank foundations and encasements component types:

- Fire Protection (B2.1.12)
- Structures Monitoring Program (B2.1.32)

3.5.2.1.14 Supports

Materials

The materials of construction for the supports component types are:

- Aluminum
- Carbon Steel

- Concrete
- High Strength Low Alloy Steel (Bolting)
- Lubrite
- Polyvinyl Chloride (PVC)
- Stainless Steel

Environment

The supports component types are exposed to the following environments:

- Atmosphere/ Weather (Structural)
- Borated Water Leakage
- Buried (Structural)
- Plant Indoor Air (Structural)
- Submerged (Structural)

Aging Effects Requiring Management

The following supports aging effects require management:

- Cracking
- Loss of material
- Loss of material, cracking
- Loss of mechanical function
- Reduction in concrete anchor capacity

Aging Management Programs

The following aging management programs manage the aging effects for the supports component types:

- ASME Section XI, Subsection IWF (B2.1.29)
- Bolting Integrity (B2.1.7)
- Boric Acid Corrosion (B2.1.4)
- Structures Monitoring Program (B2.1.32)

3.5.2.2 Further Evaluation of Aging Management as Recommended by NUREG-1801

NUREG-1801 provides the basis for identifying those programs that warrant further evaluation. For the containments, structures and component supports areas, those evaluations are addressed in the following subsections.

3.5.2.2.1 PWR and BWR Containments

3.5.2.2.1.1 Aging of Inaccessible Concrete Areas

Aggressive Chemical Attack

Reinforced concrete structures at DCPP were designed, constructed, and inspected in accordance with ACI and ASTM standards, which provide for a good quality, dense, well-cured, and low permeability concrete. Procedural controls ensured quality throughout the batching, mixing, and placement processes.
FSAR Section 3.8 discusses the design requirements for each major structure. Crack control was achieved through proper sizing, spacing, and distribution of reinforcing steel in accordance with ACI 318-63. The groundwater chemistry is monitored at DCPP and has not been found to be aggressive, i.e., pH > 5.5, chlorides < 500 ppm, and sulfates < 1500 ppm. Should future monitoring results exceed any of these limits, the effects on existing structures will be evaluated, and additional inspections, if warranted, will be performed.

Corrosion of Embedded Steel

Reinforced concrete structures at DCPP were designed, constructed, and inspected in accordance with ACI and ASTM standards, which provide for a good quality, dense, well-cured, and low permeability concrete. Procedural controls ensured quality throughout the batching, mixing, and placement processes.
FSAR Section 3.8 discusses the design requirements for each major structure. Crack control was achieved through proper sizing, spacing, and distribution of reinforcing steel in accordance with ACI 318-63. The groundwater chemistry is monitored at DCPP and has not been found to be aggressive, i.e., pH > 5.5, chlorides < 500 ppm, and sulfates < 1500 ppm. Should future monitoring results exceed any of these limits, the effects on existing structures will be evaluated, and additional inspections, if warranted, will be performed.

3.5.2.2.1.2 Cracks and Distortion due to Increased Stress Levels from Settlement; Reduction of Foundation Strength, Cracking, and Differential Settlement due to Erosion of Porous Concrete Subfoundations, if not Covered by the Structures Monitoring Program

Settlement

At DCPP, Seismic Category I structures and non-Seismic Category I structures housing Design Class I equipment are founded on rock. Therefore, further evaluation of increased stress levels due to settlement is not required. (FSAR Section 2.5.1.2.6.5)

Porous Concrete Subfoundations

DCPP has no porous concrete subfoundations. Therefore, further evaluation for aging effects due to erosion of porous concrete is not required.

3.5.2.2.1.3 Reduction of Strength and Modulus of Concrete Structures due to Elevated Temperature

Elevated Temperatures

Not applicable. DCPP has no dome, wall, basemat, ring girder, buttresses, containment, or annulus concrete exposed to elevated temperatures, so the applicable NUREG-1801 lines were not used.

At DCPP, the reactor vessel is supported on a massive concrete structure by an octagonal closed steel box that provides support at four of the eight reactor nozzles. The bearing plates below the reactor nozzle support shoes contain cooling water passages to control the temperature of the supporting concrete. (FSAR Section 5.5.13.2.1) Piping penetrations with welded end plates or flued heads are provided for all piping passing through the containment boundary. Penetrations for pipes carrying hot fluids are designed to maintain the temperature of the concrete adjacent to the sleeve below 200º F under normal operating conditions. (FSAR Section 3.8.1.1.3.2) The HVAC system is designed to maintain containment ambient temperature between 50º F and 120º F, temperatures of 150º F or below in the CRDM shroud area, and 135º F or below inside the primary concrete shield during normal plant operation. (FSAR Section 9.4.5.1) Therefore, reduction of strength and modulus of concrete structures due to elevated temperature is not an aging effect that requires further evaluation. Accessible concrete components are monitored by the Structures Monitoring Program (B2.1.32) to confirm the absence of

aging effects that could impact the structural integrity / intended function of the component.

3.5.2.2.1.4 Loss of Material due to General, Pitting, and Crevice Corrosion

Corrosion in inaccessible areas of steel containment liner

Reinforced concrete structures at DCPP were designed, constructed, and inspected in accordance with ACI and ASTM standards, which provide for a good quality, dense, well-cured, and low permeability concrete. Procedural controls ensured quality throughout the batching, mixing, and placement processes. FSAR Section 3.8 discusses the design requirements for each major structure. Crack control was achieved through proper sizing, spacing, and distribution of reinforcing steel in accordance with ACI 318-63. The ASME Section XI, Subsection IWL program (B2.1.28) identifies and manages any cracks in the concrete that could potentially provide a pathway for water to reach inaccessible portions of the steel containment liner. Procedural controls ensure that borated water spills are not common, and when detected are cleaned up in a timely manner. Therefore, further evaluation for corrosion in inaccessible areas of the steel containment liner is not required.

3.5.2.2.1.5 Loss of Prestress due to Relaxation, Shrinkage, Creep, and Elevated Temperature

Not applicable. The concrete containment building at DCPP is conventionally reinforced. There are no prestressing tendons, so the applicable NUREG-1801 lines were not used.

3.5.2.2.1.6 Cumulative Fatigue Damage

Analyses of fatigue in containment penetrations are TLAAs as defined in 10 CFR 54.3 only if a CLB fatigue analysis exists. TLAAs are evaluated in accordance with 10 CFR 54.21(c). DCPP containment penetrations are supported by TLAAs. DCPP does not have containment penetration sleeves with bellows or dissimilar metal welds that are both within the scope of license renewal and supported by a TLAA. Section 4.6.2 describes the evaluation of the containment penetrations.

3.5.2.2.1.7 Cracking due to Stress Corrosion Cracking (SCC)

Not applicable. DCPP has no in-scope stainless steel penetration sleeves, penetration bellows, or dissimilar metal welds subject to stress corrosion cracking, so the applicable NUREG-1801 lines were not used.

3.5.2.2.1.8 Cracking due to Cyclic Loading

Not applicable. Fatigue of metal components is a TLAA, evaluated in accordance with 10 CFR 54.21(c), so the applicable NUREG-1801 lines were not used.

3.5.2.2.1.9 Loss of Material (Scaling, Cracking. and Spalling) due to Freeze Thaw

Freeze-Thaw

DCPP is located in a weathering region classified as 'Negligible' according to Figure 1 of ASTM C33-07. Therefore, further evaluation for the effects of freeze-thaw is not required.

3.5.2.2.1.10 Cracking due to Expansion, and Reaction with Aggregate, and Increase in Porosity and Permeability due to Leaching of Calcium Hydroxide

Reaction with Aggregates

As noted in FSAR Section 3.8.1.6.1(2), source acceptance of aggregates was based, in part, on petrographic examination in accordance with ASTM C295. The concrete aggregates were found to be non-reactive. Therefore, further evaluation for the effects of reaction with aggregates is not required.

Leaching of Calcium Hydroxide

Reinforced concrete structures at DCPP were designed, constructed, and inspected in accordance with ACI and ASTM standards, which provide for a good quality, dense, well-cured, and low permeability concrete. Procedural controls ensured quality throughout the batching, mixing, and placement processes. FSAR Section 3.8 discusses the design requirements for each major structure. FSAR Section 3.8.1.6.1(2) provides details of the concrete mixes, which were designed in accordance with Method 2, Section 308, of ACI 301. Therefore, further evaluation for the effects of leaching of calcium hydroxide is not required.

3.5.2.2.2 Safety-Related and Other Structures and Component Supports

3.5.2.2.2.1 Aging of Structures Not Covered by Structures Monitoring Program

The following aging effects do not require further evaluation because the components are evaluated under the Structures Monitoring Program (B2.1.32).

- Corrosion of embedded steel
- Aggressive chemical attack
- Loss of material due to corrosion
- Reaction with aggregates

DCPP is located in a weathering region classified as Negligible according to Figure 1 of ASTM C33-07. Therefore, further evaluation for the effects of freeze-thaw is not required.

At DCPP, Seismic Category I structures and non-Seismic Category I structures housing Design Class I equipment are founded on rock. Therefore, further evaluation for the effects of settlement is not required. (FSAR Section 2.5.1.2.6.5)

DCPP does not have porous concrete subfoundations. Therefore, further evaluation for the effects of erosion of porous concrete subfoundations is not required.

DCPP did not use Lubrite on the RPV support shoes or steam generator supports. All in-scope sliding surfaces are evaluated under the Structures Monitoring Program (B2.1.32) or under ASME Section XI, Subsection IWF (B2.1.29). Therefore, further evaluation for lock up due to wear of sliding surfaces is not required.

3.5.2.2.2.2 Aging Management of Inaccessible Areas

3.5.2.2.2.2.1 Freeze-Thaw

Freeze-Thaw

DCPP is located in a weathering region classified as ‘Negligible’ according to Figure 1 of ASTM C33-07. Therefore, further evaluation for the effects of freeze-thaw is not required.

3.5.2.2.2.2.2 Reaction with Aggregates

Reaction with Aggregates

As noted in FSAR Section 3.8.1.6.1(2), source acceptance of aggregates was based, in part, on petrographic examination in accordance with ASTM C295. The concrete aggregates were found to be non-reactive. Therefore, further evaluation for the effects of reaction with aggregates is not required.

3.5.2.2.2.2.3 Settlement and settlement due to erosion of porous concrete subfoundations

Settlement

At DCPP, Seismic Category I structures and non-Seismic Category I structures housing Design Class I equipment are founded on rock. Therefore, further evaluation for the effects of settlement is not required. (FSAR Section 2.5.1.2.6.5)

Porous Concrete Subfoundations

DCPP has no porous concrete subfoundations. Therefore, further evaluation for aging effects due to erosion of porous concrete is not required.

3.5.2.2.2.2.4 Aggressive chemical attack and corrosion of embedded steel

Aggressive Chemical Attack

Reinforced concrete structures at DCPP were designed, constructed, and inspected in accordance with ACI and ASTM standards, which provide for a good quality, dense, well-cured, and low permeability concrete. Procedural controls ensured quality throughout the batching, mixing, and placement processes. FSAR Section 3.8 discusses the design requirements for each major structure. Crack control was achieved through proper sizing, spacing, and distribution of reinforcing steel in accordance with ACI 318-63. The groundwater chemistry is monitored at DCPP and has not been found to be aggressive, i.e., pH > 5.5, chlorides < 500 ppm, and sulfates < 1500 ppm. Should future monitoring results exceed any of these limits, the effects on existing structures will be evaluated, and additional inspections, if warranted, will be performed.

Corrosion of Embedded Steel

Reinforced concrete structures at DCPP were designed, constructed, and inspected in accordance with ACI and ASTM standards, which provide for a good quality, dense, well-cured, and low permeability concrete. Procedural controls ensured quality throughout the batching, mixing, and placement processes. FSAR Section 3.8 discusses the design requirements for each major structure. Crack control was achieved through proper sizing, spacing, and distribution of reinforcing

steel in accordance with ACI 318-63. The groundwater chemistry is monitored at DCPP and has not been found to be aggressive, i.e., pH > 5.5, chlorides < 500 ppm, and sulfates < 1500 ppm. Should future monitoring results exceed any of these limits, the effects on existing structures will be evaluated, and additional inspections, if warranted, will be performed.

3.5.2.2.2.2.5 Leaching of Calcium Hydroxide

Leaching of Calcium Hydroxide

Reinforced concrete structures at DCPP were designed, constructed, and inspected in accordance with ACI and ASTM standards, which provide for a good quality, dense, well-cured, and low permeability concrete. Procedural controls ensured quality throughout the batching, mixing, and placement processes. FSAR Section 3.8 discusses the design requirements for each major structure. FSAR Section 3.8.1.6.1(2) provides details of the concrete mixes, which were designed in accordance with Method 2, Section 308, of ACI 301. Therefore, further evaluation for the effects of leaching of calcium hydroxide is not required.

3.5.2.2.2.3 Reduction of Strength and Modulus of Concrete Structures due to Elevated Temperature

Elevated Temperatures

Not applicable. Concrete elements at DCPP are not exposed to general temperatures above 150º F or local temperatures above 200º F, so the applicable NUREG-1801 lines were not used.

At DCPP, the HVAC system is designed to maintain maximum design indoor room temperatures well below 150º F (FSAR Section 9.4). Penetrations for pipes carrying hot fluids are designed to maintain the temperature of the concrete adjacent to the sleeve below 200º F under normal operating conditions. Therefore, reduction of strength and modulus of concrete structures due to elevated temperature is not an aging effect that requires further evaluation. Accessible concrete components are monitored by the Structures Monitoring Program (B2.1.32) to confirm the absence of aging effects that could impact the structural integrity/intended function of the component.

3.5.2.2.2.4 Aging Management of Inaccessible Areas for Group 6 Structures

3.5.2.2.2.4.1 Aggressive chemical attack and corrosion of embedded steel

Aggressive Chemical Attack

Reinforced concrete structures at DCPP were designed, constructed, and inspected in accordance with ACI and ASTM standards, which provide for a good quality, dense, well-cured, and low permeability concrete. Procedural controls ensured quality throughout the batching, mixing, and placement processes. FSAR Section 3.8 discusses the design requirements for each major structure. Crack control was achieved through proper sizing, spacing, and distribution of reinforcing steel in accordance with ACI 318-63. The groundwater chemistry is monitored at DCPP and has not been found to be aggressive, i.e., pH > 5.5, chlorides < 500 ppm, and sulfates < 1500 ppm. Should future monitoring results exceed any of these limits, the effects on existing structures will be evaluated, and additional inspections, if warranted, will be performed.

Corrosion of Embedded Steel

Reinforced concrete structures at DCPP were designed, constructed, and inspected in accordance with ACI and ASTM standards, which provide for a good quality, dense, well-cured, and low permeability concrete. Procedural controls ensured quality throughout the batching, mixing, and placement processes. FSAR Section 3.8 discusses the design requirements for each major structure. Crack control was achieved through proper sizing, spacing, and distribution of reinforcing steel in accordance with ACI 318-63. The groundwater chemistry is monitored at DCPP and has not been found to be aggressive, i.e., pH > 5.5, chlorides < 500 ppm, and sulfates < 1500 ppm. Should future monitoring results exceed any of these limits, the effects on existing structures will be evaluated, and additional inspections, if warranted, will be performed.

3.5.2.2.2.4.2 Freeze-Thaw

Freeze-Thaw

DCPP is located in a weathering region classified as 'Negligible' according to Figure 1 of ASTM C33-07. Therefore, further evaluation for the effects of freeze-thaw is not required.

3.5.2.2.2.4.3 Reaction with Aggregates and Leaching of Calcium Hydroxide

Reaction with Aggregates

As noted in FSAR Section 3.8.1.6.1(2), source acceptance of aggregates was based, in part, on petrographic examination in accordance with ASTM C295. The concrete aggregates were found to be non-reactive. Therefore, further evaluation for the effects of reaction with aggregates is not required.

Leaching of Calcium Hydroxide

Reinforced concrete structures at DCPP were designed, constructed, and inspected in accordance with ACI and ASTM standards, which provide for a good quality, dense, well-cured, and low permeability concrete. Procedural controls ensured quality throughout the batching, mixing, and placement processes. FSAR Section 3.8 discusses the design requirements for each major structure. FSAR Section 3.8.1.6.1(2) provides details of the concrete mixes, which were designed in accordance with Method 2, Section 308, of ACI 301. Therefore, further evaluation for the effects of leaching of calcium hydroxide is not required.

3.5.2.2.2.5 Cracking due to Stress Corrosion Cracking and Loss of Material due to Pitting and Crevice Corrosion

Not applicable. The in-scope tank liners at DCPP were evaluated as tanks with their mechanical systems and assigned lines from NUREG-1801 Chapters VII and VIII. Therefore, the NUREG-1801 lines from Chapter III were not used.

3.5.2.2.2.6 Aging of Supports Not Covered by the Structures Monitoring Program

Each of the following is inspected per the Structures Monitoring Program. Therefore, further evaluation is not required.

- Building concrete around support anchorages
- HVAC duct supports

- Instrument supports
- Non-ASME mechanical equipment supports
- Non-ASME supports
- Electrical panels and enclosures

3.5.2.2.2.7 Cumulative Fatigue Damage due to Cyclic Loading

Analyses of fatigue in component support members, anchor bolts, and welds for Group B1.1, B1.2, and B1.3 component supports (for ASME III Class 1, 2, and 3 piping and components, and for Class MC BWR containment supports) are TLAAs as defined in 10 CFR 54.3 only if a CLB fatigue analysis exists. The review identified no TLAAs supporting design of these components at DCPP.

DCPP ASME Class 1 piping is designed to code editions and addenda before 1986, which therefore precede cycle limits for allowable stress in supports (see Section 4.3.2.7). DCPP ASME Class 2 and 3 piping and components require no fatigue or cycle design analysis for their supports, and no other similar analysis exist for supports for those components at DCPP.

DCPP is a PWR and does not have Class MC BWR containment supports.

3.5.2.2.3 Quality Assurance for Aging Management of Nonsafety-Related Components

Quality Assurance Program and Administrative Controls are discussed in Section B1.3.

3.5.2.3 Time-Limited Aging Analysis

The time-limited aging analyses identified below are associated with the containments, structures, and component supports component types. The section within Chapter 4, Time-Limited Aging Analyses, is indicated in parenthesis.

- Cumulative Fatigue Damage (Section 4.3, Metal Fatigue Analysis and Section 4.6.2, Design Cycles for Containment Penetrations)

3.5.3 Conclusions

The Containments, Structures and Component Supports component types that are subject to AMR have been evaluated. The aging management programs selected to

manage the aging effects for the Containment, Structures and Component Supports component types are identified in the summary Tables and in Section 3.5.2.1.

A description of these aging management programs is provided in Appendix B, along with a demonstration that the identified aging effects will be managed for the period of extended operation.

Therefore, based on the demonstration provided in Appendix B, the effects of aging associated with the Containments, Structures and Component Supports component types will be adequately managed so that there is reasonable assurance that the intended functions will be maintained consistent with the current licensing basis during the period of extended operation.

Table 3.5.1 Summary of Aging Management Evaluations in Chapters II and III of NUREG-1801 for Containments, Structures, and Component Supports

Item Number	Component Type	Aging Effect / Mechanism	Aging Management Program	Further Evaluation Recommended	Discussion
3.5.1.01	Concrete elements: walls, dome, basemat, ring girder, buttresses, containment (as applicable)	Aging of accessible and inaccessible concrete areas due to aggressive chemical attack, and corrosion of embedded steel	ISI (IWL) (B2.1.28) and for inaccessible concrete, an examination of representative samples of below-grade concrete, and periodic monitoring of groundwater, if the environment is non-aggressive. A plant specific program is to be evaluated if environment is aggressive.	Yes	Consistent with NUREG-1801. See further evaluation in Section 3.5.2.2.1.1.
3.5.1.02	Concrete elements; All	Cracks and distortion due to increased stress levels from settlement	Structures Monitoring Program (B2.1.32). If a de-watering system is relied upon for control of settlement, then the licensee is to ensure proper functioning of the de-watering system through the period of extended operation.	Yes, if not within the scope of the applicant's structures monitoring program or a de-watering system is relied upon	Consistent with NUREG-1801. See further evaluation in Section 3.5.2.2.1.2.

Table 3.5.1 Summary of Aging Management Evaluations in Chapters II and III of NUREG-1801 for Containments, Structures, and Component Supports (Continued)

Item Number	Component Type	Aging Effect / Mechanism	Aging Management Program	Further Evaluation Recommended	Discussion
3.5.1.03	Concrete elements: foundation, sub-foundation	Reduction in foundation strength, cracking, differential settlement due to erosion of porous concrete subfoundation	Structures Monitoring Program (B2.1.32). If a de-watering system is relied upon for control of erosion of cement from porous concrete subfoundations, then the licensee is to ensure proper functioning of the de-watering system through the period of extended operation.	Yes, if not within the scope of the applicant's structures monitoring program or a de-watering system is relied upon	Not applicable. DCPP has no porous concrete foundations, so the applicable NUREG-1801 lines were not used. See further evaluation in Section 3.5.2.2.1.2.
3.5.1.04	Concrete elements: dome, wall, basemat, ring girder, buttresses, containment, concrete fill-in annulus (as applicable)	Reduction of strength and modulus of concrete due to elevated temperature	A plant-specific aging management program is to be evaluated	Yes	Not applicable. DCPP has no dome, wall, basemat, ring girder, buttresses, containment, or annulus concrete exposed to elevated temperatures, so the applicable NUREG-1801 lines were not used. See further evaluation in Section 3.5.2.2.1.3.
3.5.1.05					Not applicable - BWR only

Table 3.5.1 Summary of Aging Management Evaluations in Chapters II and III of NUREG-1801 for Containments, Structures, and Component Supports (Continued)

Item Number	Component Type	Aging Effect / Mechanism	Aging Management Program	Further Evaluation Recommended	Discussion
3.5.1.06	Steel elements: steel liner, liner anchors, integral attachments	Loss of material due to general, pitting and crevice corrosion	ISI (IWE) (B2.1.27), and 10 CFR Part 50, Appendix J (B2.1.30).	Yes, if corrosion is significant for inaccessible areas	Consistent with NUREG-1801 with aging management program exceptions. The aging management program(s) with exceptions to NUREG-1801 include: ASME Section XI, Subsection IWE (B2.1.27) See further evaluation in Section 3.5.2.2.1.4.
3.5.1.07	Prestressed containment tendons	Loss of prestress due to relaxation, shrinkage, creep, and elevated temperature	TLAA, evaluated in accordance with 10 CFR 54.21(c)	Yes, TLAA	Not applicable - DCPP does not have prestressed containment tendons. See further evaluation in Section 3.5.2.2.1.5.
3.5.1.08					Not applicable - BWR only
3.5.1.09	Steel, stainless steel elements, dissimilar metal welds: penetration sleeves, penetration bellows; suppression pool shell, unbraced downcomers	Cumulative fatigue damage (CLB fatigue analysis exists)	TLAA, evaluated in accordance with 10 CFR 54.21(c)	Yes, TLAA	Fatigue of metal components is a TLAA. However, only design of containment penetrations is supported by a TLAA. See further evaluation in Section 3.5.2.2.1.6.

Table 3.5.1 Summary of Aging Management Evaluations in Chapters II and III of NUREG-1801 for Containments, Structures, and Component Supports (Continued)

Item Number	Component Type	Aging Effect / Mechanism	Aging Management Program	Further Evaluation Recommended	Discussion
3.5.1.10	Stainless steel penetration sleeves, penetration bellows, dissimilar metal welds	Cracking due to stress corrosion cracking	ISI (IWE) (B2.1.27), and 10 CFR Part 50, Appendix J (B2.1.30), and additional appropriate examinations/evaluations for bellows assemblies and dissimilar metal welds.	Yes	Not applicable. DCPP has no in-scope stainless steel penetration sleeves, penetration bellows, or dissimilar metal welds subject to stress corrosion cracking, so the applicable NUREG-1801 lines were not used. See further evaluation in Section 3.5.2.2.1.7.
3.5.1.11					Not applicable - BWR only
3.5.1.12	Steel, stainless steel elements, dissimilar metal welds: penetration sleeves, penetration bellows; suppression pool shell, unbraced downcomers	Cracking due to cyclic loading	ISI (IWE) (B2.1.27), and 10 CFR Part 50, Appendix J (B2.1.30), and supplemented to detect fine cracks	Yes	Not applicable. Fatigue of metal components is a TLAA, evaluated in accordance with 10 CFR 54.21(c), so the applicable NUREG-1801 lines were not used. See further evaluation in Section 3.5.2.2.1.8.
3.5.1.13					Not applicable - BWR only

Table 3.5.1 Summary of Aging Management Evaluations in Chapters II and III of NUREG-1801 for Containments, Structures, and Component Supports (Continued)

Item Number	Component Type	Aging Effect / Mechanism	Aging Management Program	Further Evaluation Recommended	Discussion
3.5.1.14	Concrete elements: dome, wall, basemat ring girder, buttresses, containment (as applicable)	Loss of material (Scaling, cracking, and spalling) due to freeze-thaw	ISI (IWL) (B2.1.28). Evaluation is needed for plants that are located in moderate to severe weathering conditions (weathering index >100 day-inch/yr) (NUREG-1557).	Yes	Consistent with NUREG-1801. See further evaluation in Section 3.5.2.2.1.9.
3.5.1.15	Concrete elements: walls, dome, basemat, ring girder, buttresses, containment, concrete fill-in annulus (as applicable).	Cracking due to expansion and reaction with aggregate; increase in porosity, permeability due to leaching of calcium hydroxide	ISI (IWL) (B2.1.28) for accessible areas. None for inaccessible areas if concrete was constructed in accordance with the recommendations in ACI 201.2R.	Yes, if concrete was not constructed as stated for inaccessible areas	Consistent with NUREG-1801. See further evaluation in Section 3.5.2.2.1.10.
3.5.1.16	Seals, gaskets, and moisture barriers	Loss of sealing and leakage through containment due to deterioration of joint seals, gaskets, and moisture barriers (caulking, flashing, and other sealants)	ISI (IWE) (B2.1.27), and 10 CFR Part 50, Appendix J (B2.1.30).	No	Consistent with NUREG-1801 with aging management program exceptions. The aging management program(s) with exceptions to NUREG-1801 include: ASME Section XI, Subsection IWE (B2.1.27)

Table 3.5.1 Summary of Aging Management Evaluations in Chapters II and III of NUREG-1801 for Containments, Structures, and Component Supports (Continued)

Item Number	Component Type	Aging Effect / Mechanism	Aging Management Program	Further Evaluation Recommended	Discussion
3.5.1.17	Personnel airlock, equipment hatch and CRD hatch locks, hinges, and closure mechanisms	Loss of leak tightness in closed position due to mechanical wear of locks, hinges and closure mechanisms	10 CFR Part 50, Appendix J (B2.1.30) and Plant Technical Specifications	No	Consistent with NUREG-1801.
3.5.1.18	Steel penetration sleeves and dissimilar metal welds; personnel airlock, equipment hatch and CRD hatch	Loss of material due to general, pitting, and crevice corrosion	ISI (IWE) (B2.1.27), and 10 CFR Part 50, Appendix J (B2.1.30).	No	Consistent with NUREG-1801 with aging management program exceptions. The aging management program(s) with exceptions to NUREG-1801 include: ASME Section XI, Subsection IWE (B2.1.27)
3.5.1.19					Not applicable - BWR only
3.5.1.20					Not applicable - BWR only
3.5.1.21					Not applicable - BWR only
3.5.1.22	Prestressed containment: tendons and anchorage components	Loss of material due to corrosion	ISI (IWL) (B2.1.28)	No	Not applicable. DCPP has no prestressed containment, so the applicable NUREG-1801 lines were not used.

Table 3.5.1 Summary of Aging Management Evaluations in Chapters II and III of NUREG-1801 for Containments, Structures, and Component Supports (Continued)

Item Number	Component Type	Aging Effect / Mechanism	Aging Management Program	Further Evaluation Recommended	Discussion
3.5.1.23	All Groups except Group 6: interior and above grade exterior concrete	Cracking, loss of bond, and loss of material (spalling, scaling) due to corrosion of embedded steel	Structures Monitoring Program (B2.1.32)	Yes, if not within the scope of the applicant's structures monitoring program	Consistent with NUREG-1801. See further evaluation in Section 3.5.2.2.2.1.
3.5.1.24	All Groups except Group 6: interior and above grade exterior concrete	Increase in porosity and permeability, cracking, loss of material (spalling, scaling) due to aggressive chemical attack	Structures Monitoring Program (B2.1.32)	Yes, if not within the scope of the applicant's structures monitoring program	Consistent with NUREG-1801. See further evaluation in Section 3.5.2.2.2.1.
3.5.1.25	All Groups except Group 6: steel components: all structural steel	Loss of material due to corrosion	Structures Monitoring Program (B2.1.32). If protective coatings are relied upon to manage the effects of aging, the structures monitoring program is to include provisions to address protective coating monitoring and maintenance.	Yes, if not within the scope of the applicant's structures monitoring program	Consistent with NUREG-1801. See further evaluation in Section 3.5.2.2.2.1.

Table 3.5.1 Summary of Aging Management Evaluations in Chapters II and III of NUREG-1801 for Containments, Structures, and Component Supports (Continued)

Item Number	Component Type	Aging Effect / Mechanism	Aging Management Program	Further Evaluation Recommended	Discussion
3.5.1.26	All Groups except Group 6: accessible and inaccessible concrete: foundation	Loss of material (spalling, scaling) and cracking due to freeze-thaw	Structures Monitoring Program (B2.1.32). Evaluation is needed for plants that are located in moderate to severe weathering conditions (weathering index >100 day-inch/yr) (NUREG-1557).	Yes, if not within the scope of the applicant's structures monitoring program or for inaccessible areas of plants located in moderate to severe weathering conditions	Consistent with NUREG-1801. See further evaluation in Section 3.5.2.2.2.1.
3.5.1.27	All Groups except Group 6: accessible and inaccessible interior/exterior concrete	Cracking due to expansion due to reaction with aggregates	Structures Monitoring Program (B2.1.32)	Yes, if not within the scope of the applicant's structures monitoring program or concrete was not constructed as stated for inaccessible areas	Consistent with NUREG-1801. See further evaluation in Section 3.5.2.2.2.1.

Table 3.5.1 Summary of Aging Management Evaluations in Chapters II and III of NUREG-1801 for Containments, Structures, and Component Supports (Continued)

Item Number	Component Type	Aging Effect / Mechanism	Aging Management Program	Further Evaluation Recommended	Discussion
3.5.1.28	Groups 1-3, 5-9: All	Cracks and distortion due to increased stress levels from settlement	Structures Monitoring Program (B2.1.32). If a de-watering system is relied upon for control of settlement, then the licensee is to ensure proper functioning of the de-watering system through the period of extended operation.	Yes, if not within the scope of the applicant's structures monitoring program or a de-watering system is relied upon	Consistent with NUREG-1801. See further evaluation in Section 3.5.2.2.2.1.
3.5.1.29	Groups 1-3, 5-9: foundation	Reduction in foundation strength, cracking, differential settlement due to erosion of porous concrete subfoundation	Structures Monitoring Program (B2.1.32). If a de-watering system is relied upon for control of settlement, then the licensee is to ensure proper functioning of the de-watering system through the period of extended operation.	Yes, if not within the scope of the applicant's structures monitoring program or a de-watering system is relied upon	Not applicable. DCPP has no porous concrete foundations, so the applicable NUREG-1801 lines were not used. See further evaluation in Section 3.5.2.2.2.2.3.
3.5.1.30	Group 4: Radial beam seats in BWR drywell; RPV support shoes for PWR with nozzle supports; Steam generator supports	Lock-up due to wear	Structures Monitoring Program (B2.1.32)	Yes, if not within the scope of ISI or structures monitoring program	Not applicable. DCPP did not use Lubrite on the RPV support shoes or steam generator supports, so the applicable NUREG-1801 line was not used. See further evaluation in Section 3.5.2.2.2.1.

Table 3.5.1 Summary of Aging Management Evaluations in Chapters II and III of NUREG-1801 for Containments, Structures, and Component Supports (Continued)

Item Number	Component Type	Aging Effect / Mechanism	Aging Management Program	Further Evaluation Recommended	Discussion
3.5.1.31	Groups 1-3, 5, 7-9: below-grade concrete components, such as exterior walls below grade and foundation	Increase in porosity and permeability, cracking, loss of material (spalling, scaling)/ aggressive chemical attack;	Structures Monitoring Program (B2.1.32); Examination of representative samples of below-grade concrete, and periodic monitoring of groundwater, if the environment is non-aggressive. A plant specific program is to be evaluated if environment is aggressive.	Yes	Consistent with NUREG-1801. See further evaluation in Section 3.5.2.2.2.2.4.
3.5.1.32	Groups 1-3, 5, 7-9: exterior above and below grade reinforced concrete foundations	Increase in porosity and permeability, and loss of strength due to leaching of calcium hydroxide	Structures Monitoring Program (B2.1.32) for accessible areas. None for inaccessible areas if concrete was constructed in accordance with the recommendations in ACI 201.2R-77.	Yes, if concrete was not constructed as stated for inaccessible areas	Consistent with NUREG-1801. See further evaluation in Section 3.5.2.2.2.2.5.

Table 3.5.1 Summary of Aging Management Evaluations in Chapters II and III of NUREG-1801 for Containments, Structures, and Component Supports (Continued)

Item Number	Component Type	Aging Effect / Mechanism	Aging Management Program	Further Evaluation Recommended	Discussion
3.5.1.33	Groups 1-5: concrete	Reduction of strength and modulus of concrete due to elevated temperature	A plant-specific aging management program is to be evaluated	Yes	Not applicable. Concrete elements at DCPP are not exposed to general temperatures above 150º F or local temperatures above 200º F, so the applicable NUREG-1801 lines were not used. See further evaluation in Section 3.5.2.2.2.3.
3.5.1.34	Group 6: Concrete; all	Increase in porosity and permeability, cracking, loss of material due to aggressive chemical attack; cracking, loss of bond, loss of material due to corrosion of embedded steel	Inspection of Water-Control Structures (B2.1.33)	Yes	Consistent with NUREG-1801. See further evaluation in Section 3.5.2.2.2.4.1.
3.5.1.35	Group 6: exterior above and below grade concrete foundation	Loss of material (spalling, scaling) and cracking due to freeze-thaw	Inspection of Water-Control Structures (B2.1.33)	Yes, for inaccessible areas of plants located in moderate to severe weathering conditions	Consistent with NUREG-1801. See further evaluation in Section 3.5.2.2.2.4.2.

Table 3.5.1 Summary of Aging Management Evaluations in Chapters II and III of NUREG-1801 for Containments, Structures, and Component Supports (Continued)

Item Number	Component Type	Aging Effect / Mechanism	Aging Management Program	Further Evaluation Recommended	Discussion
3.5.1.36	Group 6: all accessible/ inaccessible reinforced concrete	Cracking due to expansion/ reaction with aggregates	Inspection of Water-Control Structures (B2.1.33)	Yes, if concrete was not constructed as stated for inaccessible areas	Consistent with NUREG-1801. See further evaluation in Section 3.5.2.2.2.4.3.
3.5.1.37	Group 6: exterior above and below grade reinforced concrete foundation interior slab	Increase in porosity and permeability, loss of strength due to leaching of calcium hydroxide	Inspection of Water-Control Structures (B2.1.33)	Yes, if concrete was not constructed as stated for inaccessible areas	Consistent with NUREG-1801. See further evaluation in Section 3.5.2.2.2.4.3.
3.5.1.38	Groups 7, 8: Tank liners	Cracking due to stress corrosion cracking; loss of material due to pitting and crevice corrosion	A plant-specific aging management program is to be evaluated	Yes	Not applicable. The in-scope tank liners at DCPP were evaluated as tanks with their mechanical systems and assigned NUREG-1801 lines from Chapters VII and VIII. Therefore, the NUREG-1801 lines from Chapter III were not used. See further evaluation in Section 3.5.2.2.2.5.

Table 3.5.1 Summary of Aging Management Evaluations in Chapters II and III of NUREG-1801 for Containments, Structures, and Component Supports (Continued)

Item Number	Component Type	Aging Effect / Mechanism	Aging Management Program	Further Evaluation Recommended	Discussion
3.5.1.39	Support members; welds; bolted connections; support anchorage to building structure	Loss of material due to general and pitting corrosion	Structures Monitoring Program (B2.1.32)	Yes, if not within the scope of the applicant's structures monitoring program	Consistent with NUREG-1801. See further evaluation in Section 3.5.2.2.2.6.
3.5.1.40	Building concrete at locations of expansion and grouted anchors; grout pads for support base plates	Reduction in concrete anchor capacity due to local concrete degradation/ service-induced cracking or other concrete aging mechanisms	Structures Monitoring Program (B2.1.32)	Yes, if not within the scope of the applicant's structures monitoring program	Consistent with NUREG-1801. See further evaluation in Section 3.5.2.2.2.6.
3.5.1.41	Vibration isolation elements	Reduction or loss of isolation function/ radiation hardening, temperature, humidity, sustained vibratory loading	Structures Monitoring Program (B2.1.32)	Yes, if not within the scope of the applicant's structures monitoring program	Not applicable. There are no vibration isolation elements in scope for license renewal at DCPP, so the applicable NUREG-1801 lines were not used. See further evaluation in Section 3.5.2.2.2.6.
3.5.1.42	Groups B1.1, B1.2, and B1.3: support members: anchor bolts, welds	Cumulative fatigue damage (CLB fatigue analysis exists)	TLAA, evaluated in accordance with 10 CFR 54.21(c)	Yes, TLAA	Fatigue of support members is not a TLAA as defined in 10 CFR 54.3. See further evaluation in Section 3.5.2.2.2.7.

Table 3.5.1 Summary of Aging Management Evaluations in Chapters II and III of NUREG-1801 for Containments, Structures, and Component Supports (Continued)

Item Number	Component Type	Aging Effect / Mechanism	Aging Management Program	Further Evaluation Recommended	Discussion
3.5.1.43	Groups 1-3, 5, 6: all masonry block walls	Cracking due to restraint shrinkage, creep, and aggressive environment	Masonry Wall Program (B2.1.31)	No	Consistent with NUREG-1801 for inspections performed under the Masonry Wall Program (B2.1.31). NUREG-1801 does not provide a line in which Concrete Masonry is inspected per the Fire Protection program. Therefore, for concrete masonry walls that provide a fire barrier function, the Fire Protection program (B2.1.12) has been added.
3.5.1.44	Group 6 elastomer seals, gaskets, and moisture barriers	Loss of sealing due to deterioration of seals, gaskets, and moisture barriers (caulking, flashing, and other sealants)	Structures Monitoring Program (B2.1.32)	No	Consistent with NUREG-1801.
3.5.1.45	Group 6: exterior above and below grade concrete foundation; interior slab	Loss of material due to abrasion, cavitation	Inspection of Water-Control Structures (B2.1.33)	No	Consistent with NUREG-1801.

Table 3.5.1 Summary of Aging Management Evaluations in Chapters II and III of NUREG-1801 for Containments, Structures, and Component Supports (Continued)

Item Number	Component Type	Aging Effect / Mechanism	Aging Management Program	Further Evaluation Recommended	Discussion
3.5.1.46	Group 5: Fuel pool liners	Cracking due to stress corrosion cracking; loss of material due to pitting and crevice corrosion	Water Chemistry (B2.1.2) and monitoring of spent fuel pool water level in accordance with technical specifications and leakage from the leak chase channels.	No	Consistent with NUREG-1801.
3.5.1.47	Group 6: all metal structural members	Loss of material due to general (steel only), pitting and crevice corrosion	Inspection of Water-Control Structures (B2.1.33)	No	Consistent with NUREG-1801 for material, environment, and aging effect, but a different aging management program Structures Monitoring Program (B2.1.32) is credited.
3.5.1.48	Group 6: earthen water control structures - dams, embankments, reservoirs, channels, canals, and ponds	Loss of material, loss of form due to erosion, settlement, sedimentation, frost action, waves, currents, surface runoff, Seepage	Inspection of Water-Control Structures (B2.1.33)	No	Consistent with NUREG-1801.
3.5.1.49					Not applicable - BWR only

Table 3.5.1 Summary of Aging Management Evaluations in Chapters II and III of NUREG-1801 for Containments, Structures, and Component Supports (Continued)

Item Number	Component Type	Aging Effect / Mechanism	Aging Management Program	Further Evaluation Recommended	Discussion
3.5.1.50	Groups B2, and B4: galvanized steel, aluminum, stainless steel support members; welds; bolted connections; support anchorage to building structure	Loss of material due to pitting and crevice corrosion	Structures Monitoring Program (B2.1.32)	No	Consistent with NUREG-1801.
3.5.1.51	Group B1.1: high strength low-alloy bolts	Cracking due to stress corrosion cracking; loss of material due to general corrosion	Bolting Integrity (B2.1.7)	No	Consistent with NUREG-1801 with aging management program exceptions. The aging management program(s) with exceptions to NUREG-1801 include: Bolting Integrity (B2.1.7)
3.5.1.52	Groups B2, and B4: sliding support bearings and sliding support surfaces	Loss of mechanical function due to corrosion, distortion, dirt, overload, fatigue due to vibratory and cyclic thermal loads	Structures Monitoring Program (B2.1.32)	No	Consistent with NUREG-1801.

Table 3.5.1 Summary of Aging Management Evaluations in Chapters II and III of NUREG-1801 for Containments, Structures, and Component Supports (Continued)

Item Number	Component Type	Aging Effect / Mechanism	Aging Management Program	Further Evaluation Recommended	Discussion
3.5.1.53	Groups B1.1, B1.2, and B1.3: support members: welds; bolted connections; support anchorage to building structure	Loss of material due to general and pitting corrosion	ISI (IWF) (B2.1.29)	No	Consistent with NUREG-1801.
3.5.1.54	Groups B1.1, B1.2, and B1.3: Constant and variable load spring hangers; guides; stops;	Loss of mechanical function due to corrosion, distortion, dirt, overload, fatigue due to vibratory and cyclic thermal loads	ISI (IWF) (B2.1.29)	No	Consistent with NUREG-1801.
3.5.1.55	Steel, galvanized steel, and aluminum support members; welds; bolted connections; support anchorage to building structure	Loss of material due to boric acid corrosion	Boric Acid Corrosion (B2.1.4)	No	Consistent with NUREG-1801.
3.5.1.56	Groups B1.1, B1.2, and B1.3: Sliding surfaces	Loss of mechanical function due to corrosion, distortion, dirt, overload, fatigue due to vibratory and cyclic thermal loads	ISI (IWF) (B2.1.29)	No	Consistent with NUREG-1801.

Table 3.5.1 Summary of Aging Management Evaluations in Chapters II and III of NUREG-1801 for Containments, Structures, and Component Supports (Continued)

Item Number	Component Type	Aging Effect / Mechanism	Aging Management Program	Further Evaluation Recommended	Discussion
3.5.1.57	Groups B1.1, B1.2, and B1.3: Vibration isolation elements	Reduction or loss of isolation function/ radiation hardening, temperature, humidity, sustained vibratory loading	ISI (IWF) (B2.1.29)	No	Not applicable. There are no vibration isolation elements within the scope of license renewal at DCPP, so the applicable NUREG-1801 lines were not used.
3.5.1.58	Galvanized steel and aluminum support members; welds; bolted connections; support anchorage to building structure exposed to air - indoor uncontrolled	None	None	No	Consistent with NUREG-1801.
3.5.1.59	Stainless steel support members; welds; bolted connections; support anchorage to building structure	None	None	No	Consistent with NUREG-1801.

Table 3.5.2-1 Containments, Structures, and Component Supports – Summary of Aging Management Evaluation - Containment Building

Component Type	Intended Function	Material	Environment	Aging Effect Requiring Management	Aging Management Program	NUREG-1801 Vol. 2 Item	Table 1 Item	Notes
Compressible Joints & Seals	SH, SPB	Elastomer	Plant Indoor Air (Structural) (Ext)	Loss of sealing; Leakage through containment	ASME Section XI, Subsection IWE (B2.1.27) and 10 CFR Part 50, Appendix J (B2.1.30)	II.A3-7	3.5.1.16	B
Concrete Elements	FB, MB, SH, SLD, SPB, SS	Concrete	Atmosphere/ Weather (Structural) (Ext)	Loss of material (spalling, scaling) and cracking	ASME Section XI, Subsection IWL (B2.1.28)	II.A1-2	3.5.1.14	A
Concrete Elements	FB, MB, SH, SLD, SPB, SS	Concrete	Atmosphere/ Weather (Structural) (Ext)	Cracking due to expansion	ASME Section XI, Subsection IWL (B2.1.28)	II.A1-3	3.5.1.15	A
Concrete Elements	FB, MB, SH, SLD, SPB, SS	Concrete	Atmosphere/ Weather (Structural) (Ext)	Increase in porosity, permeability	ASME Section XI, Subsection IWL (B2.1.28)	II.A1-6	3.5.1.15	A
Concrete Elements	FB, MB, SH, SLD, SPB, SS	Concrete	Atmosphere/ Weather (Structural) (Ext)	Cracking, loss of bond, and loss of material (spalling, scaling)	ASME Section XI, Subsection IWL (B2.1.28)	II.A1-7	3.5.1.01	A
Concrete Elements	FB, MB, SH, SLD, SPB, SS	Concrete	Atmosphere/ Weather (Structural) (Ext)	Concrete cracking and spalling	Fire Protection (B2.1.12) and Structures Monitoring Program (B2.1.32)	VII.G-30	3.3.1.66	B

Table 3.5.2-1 Containments, Structures, and Component Supports – Summary of Aging Management Evaluation - Containment Building (Continued)

Component Type	Intended Function	Material	Environment	Aging Effect Requiring Management	Aging Management Program	NUREG-1801 Vol. 2 Item	Table 1 Item	Notes
Concrete Elements	FB, MB, SH, SLD, SPB, SS	Concrete	Atmosphere/ Weather (Structural) (Ext)	Loss of material	Fire Protection (B2.1.12) and Structures Monitoring Program (B2.1.32)	VII.G-31	3.3.1.67	B
Concrete Elements	FLB, SH, SLD, SPB, SS	Concrete	Buried (Structural) (Ext)	Cracking due to expansion	ASME Section XI, Subsection IWL (B2.1.28)	II.A1-3	3.5.1.15	A
Concrete Elements	FLB, SH, SLD, SPB, SS	Concrete	Buried (Structural) (Ext)	Increase in porosity and permeability, cracking, loss of material (spalling, scaling)	ASME Section XI, Subsection IWL (B2.1.28)	II.A1-4	3.5.1.01	A
Concrete Elements	FLB, SH, SLD, SPB, SS	Concrete	Buried (Structural) (Ext)	Cracks and distortion	Structures Monitoring Program (B2.1.32)	II.A1-5	3.5.1.02	A
Concrete Elements	FLB, SH, SLD, SPB, SS	Concrete	Buried (Structural) (Ext)	Increase in porosity, permeability	ASME Section XI, Subsection IWL (B2.1.28)	II.A1-6	3.5.1.15	A
Concrete Elements	FB, HLBS, MB, SH, SLD, SPB, SS	Concrete	Plant Indoor Air (Structural) (Ext)	Cracking due to expansion	ASME Section XI, Subsection IWL (B2.1.28)	II.A1-3	3.5.1.15	A

Table 3.5.2-1 Containments, Structures, and Component Supports – Summary of Aging Management Evaluation - Containment Building (Continued)

Component Type	Intended Function	Material	Environment	Aging Effect Requiring Management	Aging Management Program	NUREG-1801 Vol. 2 Item	Table 1 Item	Notes
Concrete Elements	FB, HLBS, MB, SH, SLD, SPB, SS	Concrete	Plant Indoor Air (Structural) (Ext)	Increase in porosity and permeability, cracking, loss of material (spalling, scaling)	ASME Section XI, Subsection IWL (B2.1.28)	II.A1-4	3.5.1.01	A
Concrete Elements	FB, HLBS, MB, SH, SLD, SPB, SS	Concrete	Plant Indoor Air (Structural) (Ext)	Cracking, loss of bond, and loss of material (spalling, scaling)	ASME Section XI, Subsection IWL (B2.1.28)	II.A1-7	3.5.1.01	A
Concrete Elements	FB, HLBS, MB, SH, SLD, SPB, SS	Concrete	Plant Indoor Air (Structural) (Ext)	Concrete cracking and spalling	Fire Protection (B2.1.12) and Structures Monitoring Program (B2.1.32)	VII.G-28	3.3.1.65	B
Concrete Elements	FB, HLBS, MB, SH, SLD, SPB, SS	Concrete	Plant Indoor Air (Structural) (Ext)	Loss of material	Fire Protection (B2.1.12) and Structures Monitoring Program (B2.1.32)	VII.G-29	3.3.1.67	B
Doors	SH	Carbon Steel	Atmosphere/ Weather (Structural) (Ext)	Loss of material	Structures Monitoring Program (B2.1.32)	III.A4-5	3.5.1.25	A
Doors	FLB, SH	Carbon Steel	Plant Indoor Air (Structural) (Ext)	Loss of material	Structures Monitoring Program (B2.1.32)	III.A4-5	3.5.1.25	A

Table 3.5.2-1 Containments, Structures, and Component Supports – Summary of Aging Management Evaluation - Containment Building (Continued)

Component Type	Intended Function	Material	Environment	Aging Effect Requiring Management	Aging Management Program	NUREG-1801 Vol. 2 Item	Table 1 Item	Notes
Expansion Joint	SS	Stainless Steel	Plant Indoor Air (Structural) (Ext)	None	None	VII.J-15	3.3.1.94	A
Fire Barrier Coatings & Wraps	FB	Fire Barrier - Cementitious Coating	Plant Indoor Air (Structural) (Ext)	Loss of material, cracking	Fire Protection (B2.1.12)	None	None	J
Fire Barrier Coatings & Wraps	FB	Fire Barrier (Ceramic Fiber)	Plant Indoor Air (Structural) (Ext)	Loss of material, cracking	Fire Protection (B2.1.12)	None	None	J
Fire Barrier Doors	FB, SH	Carbon Steel	Plant Indoor Air (Structural) (Ext)	Loss of material	Structures Monitoring Program (B2.1.32)	III.A1-12	3.5.1.25	A
Fire Barrier Doors	FB, SH	Carbon Steel	Plant Indoor Air (Structural) (Ext)	Loss of material	Fire Protection (B2.1.12)	VII.G-3	3.3.1.63	B
Hatch - Emergency Airlock	SLD, SPB, SS	Carbon Steel	Plant Indoor Air (Structural) (Ext)	Loss of leak tightness	10 CFR Part 50, Appendix J (B2.1.30)	II.A3-5	3.5.1.17	A
Hatch - Emergency Airlock	SLD, SPB, SS	Carbon Steel	Plant Indoor Air (Structural) (Ext)	Loss of material	ASME Section XI, Subsection IWE (B2.1.27) and 10 CFR Part 50, Appendix J (B2.1.30)	II.A3-6	3.5.1.18	B
Hatch - Equipment	SLD, SPB, SS	Carbon Steel	Atmosphere/ Weather (Structural) (Ext)	Loss of material	ASME Section XI, Subsection IWE (B2.1.27) and 10 CFR Part 50, Appendix J (B2.1.30)	II.A3-1	3.5.1.18	B

Table 3.5.2-1 Containments, Structures, and Component Supports – Summary of Aging Management Evaluation - Containment Building (Continued)

Component Type	Intended Function	Material	Environment	Aging Effect Requiring Management	Aging Management Program	NUREG-1801 Vol. 2 Item	Table 1 Item	Notes
Hatch - Equipment	SLD, SPB, SS	Carbon Steel	Plant Indoor Air (Structural) (Ext)	Loss of leak tightness	10 CFR Part 50, Appendix J (B2.1.30)	II.A3-5	3.5.1.17	A
Hatch - Equipment	SLD, SPB, SS	Carbon Steel	Plant Indoor Air (Structural) (Ext)	Loss of material	ASME Section XI, Subsection IWE (B2.1.27) and 10 CFR Part 50, Appendix J (B2.1.30)	II.A3-6	3.5.1.18	B
Hatch - Personnel Airlock	SLD, SPB, SS	Carbon Steel	Plant Indoor Air (Structural) (Ext)	Loss of leak tightness	10 CFR Part 50, Appendix J (B2.1.30)	II.A3-5	3.5.1.17	A
Hatch - Personnel Airlock	SLD, SPB, SS	Carbon Steel	Plant Indoor Air (Structural) (Ext)	Loss of material	ASME Section XI, Subsection IWE (B2.1.27) and 10 CFR Part 50, Appendix J (B2.1.30)	II.A3-6	3.5.1.18	B
Liner Containment	SH, SLD, SPB	Carbon Steel	Encased in Concrete (Ext)	None	None	VII.J-21	3.3.1.96	C
Liner Containment	SH, SLD, SPB	Carbon Steel	Plant Indoor Air (Structural) (Ext)	Loss of material	ASME Section XI, Subsection IWE (B2.1.27) and 10 CFR Part 50, Appendix J (B2.1.30)	II.A1-11	3.5.1.06	B
Liner Refueling	SH	Stainless Steel	Encased in Concrete (Ext)	None	None	VII.J-17	3.3.1.96	C
Liner Refueling	SH	Stainless Steel	Plant Indoor Air (Structural) (Ext)	None	None	VII.J-15	3.3.1.94	A

Table 3.5.2-1 Containments, Structures, and Component Supports – Summary of Aging Management Evaluation - Containment Building (Continued)

Component Type	Intended Function	Material	Environment	Aging Effect Requiring Management	Aging Management Program	NUREG-1801 Vol. 2 Item	Table 1 Item	Notes
Liner Refueling	SH	Stainless Steel	Submerged (Structural) (Ext)	Cracking	Water Chemistry (B2.1.2) and Monitoring of the Spent Fuel Pool Water Level	III.A5-13	3.5.1.46	A
Penetration	SLD, SPB, SS	Carbon Steel	Plant Indoor Air (Structural) (Ext)	Loss of material	ASME Section XI, Subsection IWE (B2.1.27) and 10 CFR Part 50, Appendix J (B2.1.30)	II.A3-1	3.5.1.18	B
Penetration	SLD, SPB, SS	Carbon Steel	Plant Indoor Air (Structural) (Ext)	Cumulative fatigue damage	Time-Limited Aging Analysis evaluated for the period of extended operation	II.A3-4	3.5.1.09	A
Penetration	SLD, SPB, SS	Stainless Steel	Plant Indoor Air (Structural) (Ext)	None	None	VII.J-15	3.3.1.94	C
Penetrations Electrical	SLD, SPB, SS	Carbon Steel	Plant Indoor Air (Structural) (Ext)	Loss of material	ASME Section XI, Subsection IWE (B2.1.27) and 10 CFR Part 50, Appendix J (B2.1.30)	II.A3-1	3.5.1.18	B
Pipe Whip Restraints & Jet Shields	MB, SS	Carbon Steel	Plant Indoor Air (Structural) (Ext)	Loss of material	Structures Monitoring Program (B2.1.32)	III.A4-5	3.5.1.25	A
Pipe Whip Restraints & Jet Shields	MB, SS	Stainless Steel	Plant Indoor Air (Structural) (Ext)	None	None	VII.J-15	3.3.1.94	C

Table 3.5.2-1 Containments, Structures, and Component Supports – Summary of Aging Management Evaluation - Containment Building (Continued)

Component Type	Intended Function	Material	Environment	Aging Effect Requiring Management	Aging Management Program	NUREG-1801 Vol. 2 Item	Table 1 Item	Notes
Stairs, Platforms & Grates	SS	Carbon Steel	Plant Indoor Air (Structural) (Ext)	Loss of material	Structures Monitoring Program (B2.1.32)	III.A4-5	3.5.1.25	A
Structural Steel	SS	Carbon Steel	Atmosphere/ Weather (Structural) (Ext)	Loss of material	Structures Monitoring Program (B2.1.32)	III.A4-5	3.5.1.25	A
Structural Steel	SS	Carbon Steel	Encased in Concrete (Ext)	None	None	VII.J-21	3.3.1.96	C
Structural Steel	SS	Carbon Steel	Plant Indoor Air (Structural) (Ext)	Loss of material	Structures Monitoring Program (B2.1.32)	III.A4-5	3.5.1.25	A

Notes for Table 3.5.2-1:

Standard Notes:

A Consistent with NUREG-1801 item for component, material, environment, and aging effect. AMP is consistent with NUREG-1801 AMP.

B Consistent with NUREG-1801 item for component, material, environment, and aging effect. AMP takes some exceptions to NUREG-1801 AMP.

C Component is different, but consistent with NUREG-1801 item for material, environment, and aging effect. AMP is consistent with NUREG-1801 AMP.

J Neither the component nor the material and environment combination is evaluated in NUREG-1801.

Plant Specific Notes:

None

Table 3.5.2-2 Containments, Structures, and Component Supports – Summary of Aging Management Evaluation - Control Room

Component Type	Intended Function	Material	Environment	Aging Effect Requiring Management	Aging Management Program	NUREG-1801 Vol. 2 Item	Table 1 Item	Notes
Caulking & Sealant	SH, SPB	Elastomer	Plant Indoor Air (Structural) (Ext)	Loss of sealing	Structures Monitoring Program (B2.1.32)	III.A6-12	3.5.1.44	A
Concrete Elements	FB, HLBS, SH, SPB, SS	Concrete	Plant Indoor Air (Structural) (Ext)	Cracking due to expansion	Structures Monitoring Program (B2.1.32)	III.A1-2	3.5.1.27	A
Concrete Elements	FB, HLBS, SH, SPB, SS	Concrete	Plant Indoor Air (Structural) (Ext)	Cracking, loss of bond, and loss of material (spalling, scaling)	Structures Monitoring Program (B2.1.32)	III.A1-9	3.5.1.23	A
Concrete Elements	FB, HLBS, SH, SPB, SS	Concrete	Plant Indoor Air (Structural) (Ext)	Increase in porosity and permeability, cracking, loss of material (spalling, scaling)	Structures Monitoring Program (B2.1.32)	III.A1-10	3.5.1.24	A
Concrete Elements	FB, HLBS, SH, SPB, SS	Concrete	Plant Indoor Air (Structural) (Ext)	Concrete cracking and spalling	Fire Protection (B2.1.12) and Structures Monitoring Program (B2.1.32)	VII.G-28	3.3.1.65	B
Concrete Elements	FB, HLBS, SH, SPB, SS	Concrete	Plant Indoor Air (Structural) (Ext)	Loss of material	Fire Protection (B2.1.12) and Structures Monitoring Program (B2.1.32)	VII.G-29	3.3.1.67	B

Table 3.5.2-2 Containments, Structures, and Component Supports – Summary of Aging Management Evaluation - Control Room (Continued)

Component Type	Intended Function	Material	Environment	Aging Effect Requiring Management	Aging Management Program	NUREG-1801 Vol. 2 Item	Table 1 Item	Notes
Doors	SH	Carbon Steel	Plant Indoor Air (Structural) (Ext)	Loss of material	Structures Monitoring Program (B2.1.32)	III.A1-12	3.5.1.25	A
Fire Barrier Doors	FB, HLBS, SH, SPB	Carbon Steel	Plant Indoor Air (Structural) (Ext)	Loss of material	Structures Monitoring Program (B2.1.32)	III.A1-12	3.5.1.25	A
Fire Barrier Doors	FB, HLBS, SH, SPB	Carbon Steel	Plant Indoor Air (Structural) (Ext)	Loss of material	Fire Protection (B2.1.12)	VII.G-3	3.3.1.63	B
Fire Barrier Seals	FB, SPB	Elastomer	Plant Indoor Air (Structural) (Ext)	Increased hardness, shrinkage and loss of strength	Fire Protection (B2.1.12)	VII.G-1	3.3.1.61	B
Penetrations Electrical	SS	Carbon Steel	Encased in Concrete (Ext)	None	None	VII.J-21	3.3.1.96	C
Penetrations Electrical	SS	Carbon Steel	Plant Indoor Air (Structural) (Ext)	Loss of material	Structures Monitoring Program (B2.1.32)	III.A1-12	3.5.1.25	A
Penetrations Mechanical	SS	Carbon Steel	Encased in Concrete (Ext)	None	None	VII.J-21	3.3.1.96	C
Penetrations Mechanical	SS	Carbon Steel	Plant Indoor Air (Structural) (Ext)	Loss of material	Structures Monitoring Program (B2.1.32)	III.A1-12	3.5.1.25	A
Roofing Membrane	SH	Elastomer	Atmosphere/ Weather (Structural) (Ext)	Loss of sealing	Structures Monitoring Program (B2.1.32)	III.A6-12	3.5.1.44	A
Structural Steel	SS	Carbon Steel	Encased in Concrete (Ext)	None	None	VII.J-21	3.3.1.96	C

Table 3.5.2-2 Containments, Structures, and Component Supports – Summary of Aging Management Evaluation - Control Room (Continued)

Component Type	Intended Function	Material	Environment	Aging Effect Requiring Management	Aging Management Program	NUREG-1801 Vol. 2 Item	Table 1 Item	Notes
Structural Steel	SH, SS	Carbon Steel	Plant Indoor Air (Structural) (Ext)	Loss of material	Structures Monitoring Program (B2.1.32)	III.A1-12	3.5.1.25	A

Notes for Table 3.5.2-2:

Standard Note Text

A Consistent with NUREG-1801 item for component, material, environment, and aging effect. AMP is consistent with NUREG-1801 AMP.

B Consistent with NUREG-1801 item for component, material, environment, and aging effect. AMP takes some exceptions to NUREG-1801 AMP.

C Component is different, but consistent with NUREG-1801 item for material, environment, and aging effect. AMP is consistent with NUREG-1801 AMP.

Plant Specific Notes:

None

Table 3.5.2-3 Containments, Structures, and Component Supports – Summary of Aging Management Evaluation - Auxiliary Building

Component Type	Intended Function	Material	Environment	Aging Effect Requiring Management	Aging Management Program	NUREG-1801 Vol. 2 Item	Table 1 Item	Notes
Caulking & Sealant	FLB, SH	Elastomer	Atmosphere/ Weather (Structural) (Ext)	Loss of sealing	Structures Monitoring Program (B2.1.32)	III.A6-12	3.5.1.44	A
Caulking & Sealant	FLB, SH	Elastomer	Buried (Structural) (Ext)	Loss of sealing	Structures Monitoring Program (B2.1.32)	III.A6-12	3.5.1.44	A
Caulking & Sealant	FLB, SH, SPB	Elastomer	Plant Indoor Air (Structural) (Ext)	Loss of sealing	Structures Monitoring Program (B2.1.32)	III.A6-12	3.5.1.44	A
Compressible Joints & Seals	SH, SPB	Elastomer	Plant Indoor Air (Structural) (Ext)	Loss of sealing	Structures Monitoring Program (B2.1.32)	III.A6-12	3.5.1.44	A
Concrete Block (Masonry Walls)	FB, SH, SS	Concrete Block (Masonry Walls)	Plant Indoor Air (Structural) (Ext)	Cracking	Fire Protection (B2.1.12) and Masonry Wall Program (B2.1.31)	III.A3-11	3.5.1.43	E, 1
Concrete Elements	FLB, MB, SH, SS	Concrete	Atmosphere/ Weather (Structural) (Ext)	Cracking due to expansion	Structures Monitoring Program (B2.1.32)	III.A3-2	3.5.1.27	A
Concrete Elements	FLB, MB, SH, SS	Concrete	Atmosphere/ Weather (Structural) (Ext)	Loss of material (spalling, scaling) and cracking	Structures Monitoring Program (B2.1.32)	III.A3-6	3.5.1.26	A

Table 3.5.2-3 Containments, Structures, and Component Supports – Summary of Aging Management Evaluation - Auxiliary Building (Continued)

Component Type	Intended Function	Material	Environment	Aging Effect Requiring Management	Aging Management Program	NUREG-1801 Vol. 2 Item	Table 1 Item	Notes
Concrete Elements	FLB, MB, SH, SS	Concrete	Atmosphere/ Weather (Structural) (Ext)	Cracking, loss of bond, and loss of material (spalling, scaling)	Structures Monitoring Program (B2.1.32)	III.A3-9	3.5.1.23	A
Concrete Elements	FLB, MB, SH, SS	Concrete	Atmosphere/ Weather (Structural) (Ext)	Increase in porosity and permeability, cracking, loss of material (spalling, scaling)	Structures Monitoring Program (B2.1.32)	III.A3-10	3.5.1.24	A
Concrete Elements	FLB, SH, SS	Concrete	Buried (Structural) (Ext)	Cracking due to expansion	Structures Monitoring Program (B2.1.32)	III.A3-2	3.5.1.27	A
Concrete Elements	FLB, SH, SS	Concrete	Buried (Structural) (Ext)	Cracks and distortion	Structures Monitoring Program (B2.1.32)	III.A3-3	3.5.1.28	A
Concrete Elements	FLB, SH, SS	Concrete	Buried (Structural) (Ext)	Cracking, loss of bond, and loss of material (spalling, scaling)	Structures Monitoring Program (B2.1.32)	III.A3-4	3.5.1.31	A
Concrete Elements	FLB, SH, SS	Concrete	Buried (Structural) (Ext)	Increase in porosity and permeability, cracking, loss of material (spalling, scaling)	Structures Monitoring Program (B2.1.32)	III.A3-5	3.5.1.31	A

Table 3.5.2-3 Containments, Structures, and Component Supports – Summary of Aging Management Evaluation - Auxiliary Building (Continued)

Component Type	Intended Function	Material	Environment	Aging Effect Requiring Management	Aging Management Program	NUREG-1801 Vol. 2 Item	Table 1 Item	Notes
Concrete Elements	FLB, SH, SS	Concrete	Buried (Structural) (Ext)	Increase in porosity and permeability, loss of strength	Structures Monitoring Program (B2.1.32)	III.A3-7	3.5.1.32	A
Concrete Elements	FB, FLB, HLBS, SH, SLD, SPB, SS	Concrete	Plant Indoor Air (Structural) (Ext)	Cracking due to expansion	Structures Monitoring Program (B2.1.32)	III.A3-2	3.5.1.27	A
Concrete Elements	FB, FLB, HLBS, SH, SLD, SPB, SS	Concrete	Plant Indoor Air (Structural) (Ext)	Cracking, loss of bond, and loss of material (spalling, scaling)	Structures Monitoring Program (B2.1.32)	III.A3-9	3.5.1.23	A
Concrete Elements	FB, FLB, HLBS, SH, SLD, SPB, SS	Concrete	Plant Indoor Air (Structural) (Ext)	Increase in porosity and permeability, cracking, loss of material (spalling, scaling)	Structures Monitoring Program (B2.1.32)	III.A3-10	3.5.1.24	A
Concrete Elements	FB, FLB, HLBS, SH, SLD, SPB, SS	Concrete	Plant Indoor Air (Structural) (Ext)	Concrete cracking and spalling	Fire Protection (B2.1.12) and Structures Monitoring Program (B2.1.32)	VII.G-28	3.3.1.65	B
Concrete Elements	FB, FLB, HLBS, SH, SLD, SPB, SS	Concrete	Plant Indoor Air (Structural) (Ext)	Loss of material	Fire Protection (B2.1.12) and Structures Monitoring Program (B2.1.32)	VII.G-29	3.3.1.67	B

Table 3.5.2-3 Containments, Structures, and Component Supports – Summary of Aging Management Evaluation - Auxiliary Building (Continued)

Component Type	Intended Function	Material	Environment	Aging Effect Requiring Management	Aging Management Program	NUREG-1801 Vol. 2 Item	Table 1 Item	Notes
Doors	MB, SH	Carbon Steel	Atmosphere/ Weather (Structural) (Ext)	Loss of material	Structures Monitoring Program (B2.1.32)	III.A3-12	3.5.1.25	A
Doors	FLB, HLBS, SH, SPB	Carbon Steel	Plant Indoor Air (Structural) (Ext)	Loss of material	Structures Monitoring Program (B2.1.32)	III.A3-12	3.5.1.25	A
Fire Barrier Doors	FB, FLB, HLBS, SH, SPB	Carbon Steel	Plant Indoor Air (Structural) (Ext)	Loss of material	Structures Monitoring Program (B2.1.32)	III.A3-12	3.5.1.25	A
Fire Barrier Doors	FB, FLB, HLBS, SH, SPB	Carbon Steel	Plant Indoor Air (Structural) (Ext)	Loss of material	Fire Protection (B2.1.12)	VII.G-3	3.3.1.63	B
Fire Barrier Seals	FB	Elastomer	Atmosphere/ Weather (Structural) (Ext)	Increased hardness, shrinkage and loss of strength	Fire Protection (B2.1.12)	VII.G-2	3.3.1.61	B
Fire Barrier Seals	FB	Elastomer	Plant Indoor Air (Structural) (Ext)	Increased hardness, shrinkage and loss of strength	Fire Protection (B2.1.12)	VII.G-1	3.3.1.61	B
Gypsum & Plaster Barrier	SH, SPB	Gypsum & Plaster	Plant Indoor Air (Structural) (Ext)	Cracking	Structures Monitoring Program (B2.1.32)	None	None	J
Hatch	FB, SH	Carbon Steel	Plant Indoor Air (Structural) (Ext)	Loss of material	Structures Monitoring Program (B2.1.32)	III.A3-12	3.5.1.25	A
Hatch	FB, SH	Carbon Steel	Plant Indoor Air (Structural) (Ext)	Loss of material	Fire Protection (B2.1.12)	VII.G-3	3.3.1.63	D

Table 3.5.2-3 Containments, Structures, and Component Supports – Summary of Aging Management Evaluation - Auxiliary Building (Continued)

Component Type	Intended Function	Material	Environment	Aging Effect Requiring Management	Aging Management Program	NUREG-1801 Vol. 2 Item	Table 1 Item	Notes
Hatches & Plugs	MB, SH	Concrete	Atmosphere/ Weather (Structural) (Ext)	Cracking due to expansion	Structures Monitoring Program (B2.1.32)	III.A3-2	3.5.1.27	A
Hatches & Plugs	MB, SH	Concrete	Atmosphere/ Weather (Structural) (Ext)	Loss of material (spalling, scaling) and cracking	Structures Monitoring Program (B2.1.32)	III.A3-6	3.5.1.26	A
Hatches & Plugs	MB, SH	Concrete	Atmosphere/ Weather (Structural) (Ext)	Cracking, loss of bond, and loss of material (spalling, scaling)	Structures Monitoring Program (B2.1.32)	III.A3-9	3.5.1.23	A
Hatches & Plugs	MB, SH	Concrete	Atmosphere/ Weather (Structural) (Ext)	Increase in porosity and permeability, cracking, loss of material (spalling, scaling)	Structures Monitoring Program (B2.1.32)	III.A3-10	3.5.1.24	A
Hatches & Plugs	FB, SH	Concrete	Plant Indoor Air (Structural) (Ext)	Cracking due to expansion	Structures Monitoring Program (B2.1.32)	III.A3-2	3.5.1.27	A
Hatches & Plugs	FB, SH	Concrete	Plant Indoor Air (Structural) (Ext)	Cracking, loss of bond, and loss of material (spalling, scaling)	Structures Monitoring Program (B2.1.32)	III.A3-9	3.5.1.23	A

Table 3.5.2-3 Containments, Structures, and Component Supports – Summary of Aging Management Evaluation - Auxiliary Building (Continued)

Component Type	Intended Function	Material	Environment	Aging Effect Requiring Management	Aging Management Program	NUREG-1801 Vol. 2 Item	Table 1 Item	Notes
Hatches & Plugs	FB, SH	Concrete	Plant Indoor Air (Structural) (Ext)	Increase in porosity and permeability, cracking, loss of material (spalling, scaling)	Structures Monitoring Program (B2.1.32)	III.A3-10	3.5.1.24	A
Hatches & Plugs	FB, SH	Concrete	Plant Indoor Air (Structural) (Ext)	Concrete cracking and spalling	Fire Protection (B2.1.12) and Structures Monitoring Program (B2.1.32)	VII.G-28	3.3.1.65	B
Hatches & Plugs	FB, SH	Concrete	Plant Indoor Air (Structural) (Ext)	Loss of material	Fire Protection (B2.1.12) and Structures Monitoring Program (B2.1.32)	VII.G-29	3.3.1.67	B
Metal Siding	SH	Carbon Steel	Atmosphere/ Weather (Structural) (Ext)	Loss of material	Structures Monitoring Program (B2.1.32)	III.A3-12	3.5.1.25	A
Metal Siding	SH, SPB	Carbon Steel	Plant Indoor Air (Structural) (Ext)	Loss of material	Structures Monitoring Program (B2.1.32)	III.A3-12	3.5.1.25	A
Penetrations Electrical	SS	Carbon Steel	Atmosphere/ Weather (Structural) (Ext)	Loss of material	Structures Monitoring Program (B2.1.32)	III.A3-12	3.5.1.25	A
Penetrations Electrical	SS	Carbon Steel	Encased in Concrete (Ext)	None	None	VII.J-21	3.3.1.96	C
Penetrations Electrical	SS	Carbon Steel	Plant Indoor Air (Structural) (Ext)	Loss of material	Structures Monitoring Program (B2.1.32)	III.A3-12	3.5.1.25	A

Table 3.5.2-3 Containments, Structures, and Component Supports – Summary of Aging Management Evaluation - Auxiliary Building (Continued)

Component Type	Intended Function	Material	Environment	Aging Effect Requiring Management	Aging Management Program	NUREG-1801 Vol. 2 Item	Table 1 Item	Notes
Penetrations Mechanical	SS	Carbon Steel	Atmosphere/ Weather (Structural) (Ext)	Loss of material	Structures Monitoring Program (B2.1.32)	III.A3-12	3.5.1.25	A
Penetrations Mechanical	SS	Carbon Steel	Encased in Concrete (Ext)	None	None	VII.J-21	3.3.1.96	C
Penetrations Mechanical	SS	Carbon Steel	Plant Indoor Air (Structural) (Ext)	Loss of material	Structures Monitoring Program (B2.1.32)	III.A3-12	3.5.1.25	A
Roofing Membrane	SH	Elastomer	Atmosphere/ Weather (Structural) (Ext)	Loss of sealing	Structures Monitoring Program (B2.1.32)	III.A6-12	3.5.1.44	A
Stairs, Platforms & Grates	SS	Carbon Steel	Atmosphere/ Weather (Structural) (Ext)	Loss of material	Structures Monitoring Program (B2.1.32)	III.A3-12	3.5.1.25	A
Stairs, Platforms & Grates	SS	Carbon Steel	Plant Indoor Air (Structural) (Ext)	Loss of material	Structures Monitoring Program (B2.1.32)	III.A3-12	3.5.1.25	A
Structural Steel	SS	Carbon Steel	Atmosphere/ Weather (Structural) (Ext)	Loss of material	Structures Monitoring Program (B2.1.32)	III.A3-12	3.5.1.25	A
Structural Steel	SS	Carbon Steel	Encased in Concrete (Ext)	None	None	VII.J-21	3.3.1.96	C
Structural Steel	SH, SS	Carbon Steel	Plant Indoor Air (Structural) (Ext)	Loss of material	Structures Monitoring Program (B2.1.32)	III.A3-12	3.5.1.25	A

Notes for Table 3.5.2-3:

Standard Notes:

A Consistent with NUREG-1801 item for component, material, environment, and aging effect. AMP is consistent with NUREG-1801 AMP.

B Consistent with NUREG-1801 item for component, material, environment, and aging effect. AMP takes some exceptions to NUREG-1801 AMP.

C Component is different, but consistent with NUREG-1801 item for material, environment, and aging effect. AMP is consistent with NUREG-1801 AMP.

D Component is different, but consistent with NUREG-1801 item for material, environment, and aging effect. AMP takes some exceptions to NUREG-1801 AMP.

E Consistent with NUREG-1801 for material, environment, and aging effect, but a different aging management program is credited or NUREG-1801 identifies a plant-specific aging management program.

J Neither the component nor the material and environment combination is evaluated in NUREG-1801.

Plant Specific Notes:

1 NUREG-1801 does not provide a line in which concrete masonry is inspected per the Fire Protection program (B2.1.12).

Table 3.5.2-4 Containments, Structures, and Component Supports – Summary of Aging Management Evaluation - Turbine Building

Component Type	Intended Function	Material	Environment	Aging Effect Requiring Management	Aging Management Program	NUREG-1801 Vol. 2 Item	Table 1 Item	Notes
Caulking & Sealant	FLB, SH	Elastomer	Atmosphere/ Weather (Structural) (Ext)	Loss of sealing	Structures Monitoring Program (B2.1.32)	III.A6-12	3.5.1.44	A
Caulking & Sealant	FLB, SH	Elastomer	Buried (Structural) (Ext)	Loss of sealing	Structures Monitoring Program (B2.1.32)	III.A6-12	3.5.1.44	A
Caulking & Sealant	FLB, SH	Elastomer	Plant Indoor Air (Structural) (Ext)	Loss of sealing	Structures Monitoring Program (B2.1.32)	III.A6-12	3.5.1.44	A
Concrete Block (Masonry Walls)	FB, SH, SS	Concrete Block (Masonry Walls)	Plant Indoor Air (Structural) (Ext)	Cracking	Fire Protection (B2.1.12) and Masonry Wall Program (B2.1.31)	III.A3-11	3.5.1.43	E, 1
Concrete Elements	FLB, MB, SH, SS	Concrete	Atmosphere/ Weather (Structural) (Ext)	Cracking due to expansion	Structures Monitoring Program (B2.1.32)	III.A3-2	3.5.1.27	A
Concrete Elements	FLB, MB, SH, SS	Concrete	Atmosphere/ Weather (Structural) (Ext)	Loss of material (spalling, scaling) and cracking	Structures Monitoring Program (B2.1.32)	III.A3-6	3.5.1.26	A

Table 3.5.2-4 Containments, Structures, and Component Supports – Summary of Aging Management Evaluation - Turbine Building (Continued)

Component Type	Intended Function	Material	Environment	Aging Effect Requiring Management	Aging Management Program	NUREG-1801 Vol. 2 Item	Table 1 Item	Notes
Concrete Elements	FLB, MB, SH, SS	Concrete	Atmosphere/ Weather (Structural) (Ext)	Cracking, loss of bond, and loss of material (spalling, scaling)	Structures Monitoring Program (B2.1.32)	III.A3-9	3.5.1.23	A
Concrete Elements	FLB, MB, SH, SS	Concrete	Atmosphere/ Weather (Structural) (Ext)	Increase in porosity and permeability, cracking, loss of material (spalling, scaling)	Structures Monitoring Program (B2.1.32)	III.A3-10	3.5.1.24	A
Concrete Elements	FLB, SH, SS	Concrete	Buried (Structural) (Ext)	Cracking due to expansion	Structures Monitoring Program (B2.1.32)	III.A3-2	3.5.1.27	A
Concrete Elements	FLB, SH, SS	Concrete	Buried (Structural) (Ext)	Cracks and distortion	Structures Monitoring Program (B2.1.32)	III.A3-3	3.5.1.28	A
Concrete Elements	FLB, SH, SS	Concrete	Buried (Structural) (Ext)	Cracking, loss of bond, and loss of material (spalling, scaling)	Structures Monitoring Program (B2.1.32)	III.A3-4	3.5.1.31	A
Concrete Elements	FLB, SH, SS	Concrete	Buried (Structural) (Ext)	Increase in porosity and permeability, cracking, loss of material (spalling, scaling)	Structures Monitoring Program (B2.1.32)	III.A3-5	3.5.1.31	A

Table 3.5.2-4 Containments, Structures, and Component Supports – Summary of Aging Management Evaluation - Turbine Building (Continued)

Component Type	Intended Function	Material	Environment	Aging Effect Requiring Management	Aging Management Program	NUREG-1801 Vol. 2 Item	Table 1 Item	Notes
Concrete Elements	FB, FLB, SH, SS	Concrete	Plant Indoor Air (Structural) (Ext)	Cracking due to expansion	Structures Monitoring Program (B2.1.32)	III.A3-2	3.5.1.27	A
Concrete Elements	FB, FLB, SH, SS	Concrete	Plant Indoor Air (Structural) (Ext)	Cracking, loss of bond, and loss of material (spalling, scaling)	Structures Monitoring Program (B2.1.32)	III.A3-9	3.5.1.23	A
Concrete Elements	FB, FLB, SH, SS	Concrete	Plant Indoor Air (Structural) (Ext)	Increase in porosity and permeability, cracking, loss of material (spalling, scaling)	Structures Monitoring Program (B2.1.32)	III.A3-10	3.5.1.24	A
Concrete Elements	FB, FLB, SH, SS	Concrete	Plant Indoor Air (Structural) (Ext)	Concrete cracking and spalling	Fire Protection (B2.1.12) and Structures Monitoring Program (B2.1.32)	VII.G-28	3.3.1.65	B
Concrete Elements	FB, FLB, SH, SS	Concrete	Plant Indoor Air (Structural) (Ext)	Loss of material	Fire Protection (B2.1.12) and Structures Monitoring Program (B2.1.32)	VII.G-29	3.3.1.67	B
Doors	FLB, MB, SH	Carbon Steel	Atmosphere/ Weather (Structural) (Ext)	Loss of material	Structures Monitoring Program (B2.1.32)	III.A3-12	3.5.1.25	A
Doors	HLBS, SH	Carbon Steel	Plant Indoor Air (Structural) (Ext)	Loss of material	Structures Monitoring Program (B2.1.32)	III.A3-12	3.5.1.25	A

Table 3.5.2-4 Containments, Structures, and Component Supports – Summary of Aging Management Evaluation - Turbine Building (Continued)

Component Type	Intended Function	Material	Environment	Aging Effect Requiring Management	Aging Management Program	NUREG-1801 Vol. 2 Item	Table 1 Item	Notes
Fire Barrier Coatings & Wraps	FB	Fire Barrier (Cementitious Coating)	Plant Indoor Air (Structural) (Ext)	Loss of material, cracking	Fire Protection (B2.1.12)	None	None	J, 2
Fire Barrier Doors	FB, FLB, HLBS, SH	Carbon Steel	Plant Indoor Air (Structural) (Ext)	Loss of material	Structures Monitoring Program (B2.1.32)	III.A3-12	3.5.1.25	A
Fire Barrier Doors	FB, FLB, HLBS, SH	Carbon Steel	Plant Indoor Air (Structural) (Ext)	Loss of material	Fire Protection (B2.1.12)	VII.G-3	3.3.1.63	B
Fire Barrier Seals	FB	Elastomer	Plant Indoor Air (Structural) (Ext)	Increased hardness, shrinkage and loss of strength	Fire Protection (B2.1.12)	VII.G-1	3.3.1.61	B
Gypsum & Plaster Barrier	FB, SH	Gypsum & Plaster	Plant Indoor Air (Structural) (Ext)	Cracking	Fire Protection (B2.1.12)	None	None	J, 3
Hatch	SH	Carbon Steel	Plant Indoor Air (Structural) (Ext)	Loss of material	Structures Monitoring Program (B2.1.32)	III.A3-12	3.5.1.25	A
Hatches & Plugs	FB, SH	Concrete	Plant Indoor Air (Structural) (Ext)	Cracking due to expansion	Structures Monitoring Program (B2.1.32)	III.A3-2	3.5.1.27	A
Hatches & Plugs	FB, SH	Concrete	Plant Indoor Air (Structural) (Ext)	Cracking, loss of bond, and loss of material (spalling, scaling)	Structures Monitoring Program (B2.1.32)	III.A3-9	3.5.1.23	A

Table 3.5.2-4 Containments, Structures, and Component Supports – Summary of Aging Management Evaluation - Turbine Building (Continued)

Component Type	Intended Function	Material	Environment	Aging Effect Requiring Management	Aging Management Program	NUREG-1801 Vol. 2 Item	Table 1 Item	Notes
Hatches & Plugs	FB, SH	Concrete	Plant Indoor Air (Structural) (Ext)	Increase in porosity and permeability, cracking, loss of material (spalling, scaling)	Structures Monitoring Program (B2.1.32)	III.A3-10	3.5.1.24	A
Hatches & Plugs	FB, SH	Concrete	Plant Indoor Air (Structural) (Ext)	Concrete cracking and spalling	Fire Protection (B2.1.12) and Structures Monitoring Program (B2.1.32)	VII.G-28	3.3.1.65	B
Hatches & Plugs	FB, SH	Concrete	Plant Indoor Air (Structural) (Ext)	Loss of material	Fire Protection (B2.1.12) and Structures Monitoring Program (B2.1.32)	VII.G-29	3.3.1.67	B
Metal Siding	SH	Carbon Steel	Atmosphere/ Weather (Structural) (Ext)	Loss of material	Structures Monitoring Program (B2.1.32)	III.A3-12	3.5.1.25	A
Metal Siding	SH	Carbon Steel	Plant Indoor Air (Structural) (Ext)	Loss of material	Structures Monitoring Program (B2.1.32)	III.A3-12	3.5.1.25	A
Penetrations Electrical	SS	Carbon Steel	Encased in Concrete (Ext)	None	None	VII.J-21	3.3.1.96	C
Penetrations Electrical	SS	Carbon Steel	Plant Indoor Air (Structural) (Ext)	Loss of material	Structures Monitoring Program (B2.1.32)	III.A3-12	3.5.1.25	A
Penetrations Mechanical	SS	Carbon Steel	Encased in Concrete (Ext)	None	None	VII.J-21	3.3.1.96	C

Table 3.5.2-4 Containments, Structures, and Component Supports – Summary of Aging Management Evaluation - Turbine Building (Continued)

Component Type	Intended Function	Material	Environment	Aging Effect Requiring Management	Aging Management Program	NUREG-1801 Vol. 2 Item	Table 1 Item	Notes
Penetrations Mechanical	SS	Carbon Steel	Plant Indoor Air (Structural) (Ext)	Loss of material	Structures Monitoring Program (B2.1.32)	III.A3-12	3.5.1.25	A
Stairs, Platforms & Grates	SS	Carbon Steel	Plant Indoor Air (Structural) (Ext)	Loss of material	Structures Monitoring Program (B2.1.32)	III.A3-12	3.5.1.25	A
Structural Steel	SS	Carbon Steel	Atmosphere/ Weather (Structural) (Ext)	Loss of material	Structures Monitoring Program (B2.1.32)	III.A3-12	3.5.1.25	A
Structural Steel	SS	Carbon Steel	Encased in Concrete (Ext)	None	None	VII.J-21	3.3.1.96	C
Structural Steel	SH, SS	Carbon Steel	Plant Indoor Air (Structural) (Ext)	Loss of material	Structures Monitoring Program (B2.1.32)	III.A3-12	3.5.1.25	A

Notes for Table 3.5.2-4:

Standard Notes:

A Consistent with NUREG-1801 item for component, material, environment, and aging effect. AMP is consistent with NUREG-1801 AMP.

B Consistent with NUREG-1801 item for component, material, environment, and aging effect. AMP takes some exceptions to NUREG-1801 AMP.

C Component is different, but consistent with NUREG-1801 item for material, environment, and aging effect. AMP is consistent with NUREG-1801 AMP.

E Consistent with NUREG-1801 for material, environment, and aging effect, but a different aging management program is credited or NUREG-1801 identifies a plant-specific aging management program.

J Neither the component nor the material and environment combination is evaluated in NUREG-1801.

Plant Specific Notes:

1 NUREG-1801 does not provide a line in which concrete masonry is inspected per the Fire Protection program (B2.1.12).
2 NUREG-1801 does not provide a line in which fire barriers (ceramic fiber or cementitious coating) are inspected per the Fire Protection program (B2.1.12).
3 NUREG-1801 does not provide a line in which gypsum/plaster barriers are inspected per the Fire Protection program (B2.1.12).

Table 3.5.2-5 Containments, Structures, and Component Supports – Summary of Aging Management Evaluation - Radwaste Storage Facilities

Component Type	Intended Function	Material	Environment	Aging Effect Requiring Management	Aging Management Program	NUREG-1801 Vol. 2 Item	Table 1 Item	Notes
Concrete Elements	SH	Concrete	Atmosphere/ Weather (Structural) (Ext)	Cracking due to expansion	Structures Monitoring Program (B2.1.32)	III.A3-2	3.5.1.27	A
Concrete Elements	SH	Concrete	Atmosphere/ Weather (Structural) (Ext)	Loss of material (spalling, scaling) and cracking	Structures Monitoring Program (B2.1.32)	III.A3-6	3.5.1.26	A
Concrete Elements	SH	Concrete	Atmosphere/ Weather (Structural) (Ext)	Cracking, loss of bond, and loss of material (spalling, scaling)	Structures Monitoring Program (B2.1.32)	III.A3-9	3.5.1.23	A
Concrete Elements	SH	Concrete	Atmosphere/ Weather (Structural) (Ext)	Increase in porosity and permeability, cracking, loss of material (spalling, scaling)	Structures Monitoring Program (B2.1.32)	III.A3-10	3.5.1.24	A
Concrete Elements	SH	Concrete	Buried (Structural) (Ext)	Cracking due to expansion	Structures Monitoring Program (B2.1.32)	III.A3-2	3.5.1.27	A
Concrete Elements	SH	Concrete	Buried (Structural) (Ext)	Cracks and distortion	Structures Monitoring Program (B2.1.32)	III.A3-3	3.5.1.28	A

Table 3.5.2-5 Containments, Structures, and Component Supports – Summary of Aging Management Evaluation - Radwaste Storage Facilities (Continued)

Component Type	Intended Function	Material	Environment	Aging Effect Requiring Management	Aging Management Program	NUREG-1801 Vol. 2 Item	Table 1 Item	Notes
Concrete Elements	SH	Concrete	Buried (Structural) (Ext)	Cracking, loss of bond, and loss of material (spalling, scaling)	Structures Monitoring Program (B2.1.32)	III.A3-4	3.5.1.31	A
Concrete Elements	SH	Concrete	Buried (Structural) (Ext)	Increase in porosity and permeability, cracking, loss of material (spalling, scaling)	Structures Monitoring Program (B2.1.32)	III.A3-5	3.5.1.31	A
Concrete Elements	SH, SS	Concrete	Plant Indoor Air (Structural) (Ext)	Cracking due to expansion	Structures Monitoring Program (B2.1.32)	III.A3-2	3.5.1.27	A
Concrete Elements	SH, SS	Concrete	Plant Indoor Air (Structural) (Ext)	Cracking, loss of bond, and loss of material (spalling, scaling)	Structures Monitoring Program (B2.1.32)	III.A3-9	3.5.1.23	A
Concrete Elements	SH, SS	Concrete	Plant Indoor Air (Structural) (Ext)	Increase in porosity and permeability, cracking, loss of material (spalling, scaling)	Structures Monitoring Program (B2.1.32)	III.A3-10	3.5.1.24	A
Doors	SH	Carbon Steel	Atmosphere/ Weather (Structural) (Ext)	Loss of material	Structures Monitoring Program (B2.1.32)	III.A3-12	3.5.1.25	A

Table 3.5.2-5 Containments, Structures, and Component Supports – Summary of Aging Management Evaluation - Radwaste Storage Facilities (Continued)

Component Type	Intended Function	Material	Environment	Aging Effect Requiring Management	Aging Management Program	NUREG-1801 Vol. 2 Item	Table 1 Item	Notes
Doors	SH	Carbon Steel	Plant Indoor Air (Structural) (Ext)	Loss of material	Structures Monitoring Program (B2.1.32)	III.A3-12	3.5.1.25	A
Hatches & Plugs	SH	Concrete	Atmosphere/ Weather (Structural) (Ext)	Cracking due to expansion	Structures Monitoring Program (B2.1.32)	III.A3-2	3.5.1.27	A
Hatches & Plugs	SH	Concrete	Atmosphere/ Weather (Structural) (Ext)	Loss of material (spalling, scaling) and cracking	Structures Monitoring Program (B2.1.32)	III.A3-6	3.5.1.26	A
Hatches & Plugs	SH	Concrete	Atmosphere/ Weather (Structural) (Ext)	Cracking, loss of bond, and loss of material (spalling, scaling)	Structures Monitoring Program (B2.1.32)	III.A3-9	3.5.1.23	A
Hatches & Plugs	SH	Concrete	Atmosphere/ Weather (Structural) (Ext)	Increase in porosity and permeability, cracking, loss of material (spalling, scaling)	Structures Monitoring Program (B2.1.32)	III.A3-10	3.5.1.24	A
Hatches & Plugs	SH	Concrete	Plant Indoor Air (Structural) (Ext)	Cracking due to expansion	Structures Monitoring Program (B2.1.32)	III.A3-2	3.5.1.27	A
Hatches & Plugs	SH	Concrete	Plant Indoor Air (Structural) (Ext)	Cracking, loss of bond, and loss of material (spalling, scaling)	Structures Monitoring Program (B2.1.32)	III.A3-9	3.5.1.23	A

Table 3.5.2-5 Containments, Structures, and Component Supports – Summary of Aging Management Evaluation - Radwaste Storage Facilities (Continued)

Component Type	Intended Function	Material	Environment	Aging Effect Requiring Management	Aging Management Program	NUREG-1801 Vol. 2 Item	Table 1 Item	Notes
Hatches & Plugs	SH	Concrete	Plant Indoor Air (Structural) (Ext)	Increase in porosity and permeability, cracking, loss of material (spalling, scaling)	Structures Monitoring Program (B2.1.32)	III.A3-10	3.5.1.24	A

Notes for Table 3.5.2-5:
Standard Notes:

A Consistent with NUREG-1801 item for component, material, environment, and aging effect. AMP is consistent with NUREG-1801 AMP.

Plant Specific Notes:

None

Table 3.5.2-6 Containments, Structures, and Component Supports – Summary of Aging Management Evaluation - Pipeway Structure

Component Type	Intended Function	Material	Environment	Aging Effect Requiring Management	Aging Management Program	NUREG-1801 Vol. 2 Item	Table 1 Item	Notes
Stairs, Platforms & Grates	SS	Carbon Steel	Atmosphere/ Weather (Structural) (Ext)	Loss of material	Structures Monitoring Program (B2.1.32)	III.A3-12	3.5.1.25	A
Structural Steel	MB, SS	Carbon Steel	Atmosphere/ Weather (Structural) (Ext)	Loss of material	Structures Monitoring Program (B2.1.32)	III.A3-12	3.5.1.25	A
Structural Steel	SS	Carbon Steel	Encased in Concrete (Ext)	None	None	VII.J-21	3.3.1.96	C

Notes for Table 3.5.2-6:

Standard Notes:

A Consistent with NUREG-1801 item for component, material, environment, and aging effect. AMP is consistent with NUREG-1801 AMP.

C Component is different, but consistent with NUREG-1801 item for material, environment, and aging effect. AMP is consistent with NUREG-1801 AMP.

Plant Specific Notes:

None

Table 3.5.2-7 Containments, Structures, and Component Supports – Summary of Aging Management Evaluation – Diesel Fuel Oil Pump Vaults and Structures

Component Type	Intended Function	Material	Environment	Aging Effect Requiring Management	Aging Management Program	NUREG-1801 Vol. 2 Item	Table 1 Item	Notes
Caulking & Sealant	SH	Elastomer	Atmosphere/ Weather (Structural) (Ext)	Loss of sealing	Structures Monitoring Program (B2.1.32)	III.A6-12	3.5.1.44	A
Caulking & Sealant	SH	Elastomer	Plant Indoor Air (Structural) (Ext)	Loss of sealing	Structures Monitoring Program (B2.1.32)	III.A6-12	3.5.1.44	A
Concrete Elements	DF, SH, SS	Concrete	Atmosphere/ Weather (Structural) (Ext)	Cracking due to expansion	Structures Monitoring Program (B2.1.32)	III.A3-2	3.5.1.27	A
Concrete Elements	DF, SH, SS	Concrete	Atmosphere/ Weather (Structural) (Ext)	Loss of material (spalling, scaling) and cracking	Structures Monitoring Program (B2.1.32)	III.A3-6	3.5.1.26	A
Concrete Elements	DF, SH, SS	Concrete	Atmosphere/ Weather (Structural) (Ext)	Cracking, loss of bond, and loss of material (spalling, scaling)	Structures Monitoring Program (B2.1.32)	III.A3-9	3.5.1.23	A
Concrete Elements	DF, SH, SS	Concrete	Atmosphere/ Weather (Structural) (Ext)	Increase in porosity and permeability, cracking, loss of material (spalling, scaling)	Structures Monitoring Program (B2.1.32)	III.A3-10	3.5.1.24	A
Concrete Elements	SH, SS	Concrete	Buried (Structural) (Ext)	Cracking due to expansion	Structures Monitoring Program (B2.1.32)	III.A3-2	3.5.1.27	A

Table 3.5.2-7 Containments, Structures, and Component Supports – Summary of Aging Management Evaluation – Diesel Fuel Oil Pump Vaults and Structures (Continued)

Component Type	Intended Function	Material	Environment	Aging Effect Requiring Management	Aging Management Program	NUREG-1801 Vol. 2 Item	Table 1 Item	Notes
Concrete Elements	SH, SS	Concrete	Buried (Structural) (Ext)	Cracks and distortion	Structures Monitoring Program (B2.1.32)	III.A3-3	3.5.1.28	A
Concrete Elements	SH, SS	Concrete	Buried (Structural) (Ext)	Cracking, loss of bond, and loss of material (spalling, scaling)	Structures Monitoring Program (B2.1.32)	III.A3-4	3.5.1.31	A
Concrete Elements	SH, SS	Concrete	Buried (Structural) (Ext)	Increase in porosity and permeability, cracking, loss of material (spalling, scaling)	Structures Monitoring Program (B2.1.32)	III.A3-5	3.5.1.31	A
Concrete Elements	FB, SH, SS	Concrete	Plant Indoor Air (Structural) (Ext)	Cracking due to expansion	Structures Monitoring Program (B2.1.32)	III.A3-2	3.5.1.27	A
Concrete Elements	FB, SH, SS	Concrete	Plant Indoor Air (Structural) (Ext)	Cracking, loss of bond, and loss of material (spalling, scaling)	Structures Monitoring Program (B2.1.32)	III.A3-9	3.5.1.23	A
Concrete Elements	FB, SH, SS	Concrete	Plant Indoor Air (Structural) (Ext)	Increase in porosity and permeability, cracking, loss of material (spalling, scaling)	Structures Monitoring Program (B2.1.32)	III.A3-10	3.5.1.24	A

Table 3.5.2-7 Containments, Structures, and Component Supports – Summary of Aging Management Evaluation – Diesel Fuel Oil Pump Vaults and Structures (Continued)

Component Type	Intended Function	Material	Environment	Aging Effect Requiring Management	Aging Management Program	NUREG-1801 Vol. 2 Item	Table 1 Item	Notes
Concrete Elements	FB, SH, SS	Concrete	Plant Indoor Air (Structural) (Ext)	Concrete cracking and spalling	Fire Protection (B2.1.12) and Structures Monitoring Program (B2.1.32)	VII.G-28	3.3.1.65	B
Concrete Elements	FB, SH, SS	Concrete	Plant Indoor Air (Structural) (Ext)	Loss of material	Fire Protection (B2.1.12) and Structures Monitoring Program (B2.1.32)	VII.G-29	3.3.1.67	B
Hatch	SH	Carbon Steel	Atmosphere/ Weather (Structural) (Ext)	Loss of material	Structures Monitoring Program (B2.1.32)	III.A3-12	3.5.1.25	A
Hatch	SH	Carbon Steel	Plant Indoor Air (Structural) (Ext)	Loss of material	Structures Monitoring Program (B2.1.32)	III.A3-12	3.5.1.25	A
Hatches & Plugs	SH	Concrete	Atmosphere/ Weather (Structural) (Ext)	Cracking due to expansion	Structures Monitoring Program (B2.1.32)	III.A3-2	3.5.1.27	A
Hatches & Plugs	SH	Concrete	Atmosphere/ Weather (Structural) (Ext)	Loss of material (spalling, scaling) and cracking	Structures Monitoring Program (B2.1.32)	III.A3-6	3.5.1.26	A
Hatches & Plugs	SH	Concrete	Atmosphere/ Weather (Structural) (Ext)	Cracking, loss of bond, and loss of material (spalling, scaling)	Structures Monitoring Program (B2.1.32)	III.A3-9	3.5.1.23	A

Table 3.5.2-7 Containments, Structures, and Component Supports – Summary of Aging Management Evaluation – Diesel Fuel Oil Pump Vaults and Structures (Continued)

Component Type	Intended Function	Material	Environment	Aging Effect Requiring Management	Aging Management Program	NUREG-1801 Vol. 2 Item	Table 1 Item	Notes
Hatches & Plugs	SH	Concrete	Atmosphere/ Weather (Structural) (Ext)	Increase in porosity and permeability, cracking, loss of material (spalling, scaling)	Structures Monitoring Program (B2.1.32)	III.A3-10	3.5.1.24	A
Hatches & Plugs	SH	Concrete	Plant Indoor Air (Structural) (Ext)	Cracking due to expansion	Structures Monitoring Program (B2.1.32)	III.A3-2	3.5.1.27	A
Hatches & Plugs	SH	Concrete	Plant Indoor Air (Structural) (Ext)	Cracking, loss of bond, and loss of material (spalling, scaling)	Structures Monitoring Program (B2.1.32)	III.A3-9	3.5.1.23	A
Hatches & Plugs	SH	Concrete	Plant Indoor Air (Structural) (Ext)	Increase in porosity and permeability, cracking, loss of material (spalling, scaling)	Structures Monitoring Program (B2.1.32)	III.A3-10	3.5.1.24	A
Penetration Boot Seals	SH	Elastomer	Plant Indoor Air (Structural) (Ext)	Loss of sealing	Structures Monitoring Program (B2.1.32)	III.A6-12	3.5.1.44	A
Structural Steel	SS	Carbon Steel	Atmosphere/ Weather (Structural) (Ext)	Loss of material	Structures Monitoring Program (B2.1.32)	III.A3-12	3.5.1.25	A
Structural Steel	SS	Carbon Steel	Encased in Concrete (Ext)	None	None	VII.J-21	3.3.1.96	C

Table 3.5.2-7 Containments, Structures, and Component Supports – Summary of Aging Management Evaluation – Diesel Fuel Oil Pump Vaults and Structures (Continued)

Component Type	Intended Function	Material	Environment	Aging Effect Requiring Management	Aging Management Program	NUREG-1801 Vol. 2 Item	Table 1 Item	Notes
Structural Steel	SS	Carbon Steel	Plant Indoor Air (Structural) (Ext)	Loss of material	Structures Monitoring Program (B2.1.32)	III.A3-12	3.5.1.25	A

Notes for Table 3.5.2-7:

Standard Notes:

A Consistent with NUREG-1801 item for component, material, environment, and aging effect. AMP is consistent with NUREG-1801 AMP.

B Consistent with NUREG-1801 item for component, material, environment, and aging effect. AMP takes some exceptions to NUREG-1801 AMP.

C Component is different, but consistent with NUREG-1801 item for material, environment, and aging effect. AMP is consistent with NUREG-1801 AMP.

Plant Specific Notes:

None

Table 3.5.2-8 Containments, Structures, and Component Supports – Summary of Aging Management Evaluation – 230 kV Switchyard, 500 kV Switchyard, and Electrical Foundations and Structures

Component Type	Intended Function	Material	Environment	Aging Effect Requiring Management	Aging Management Program	NUREG-1801 Vol. 2 Item	Table 1 Item	Notes
Caulking & Sealant	SH	Elastomer	Atmosphere/ Weather (Structural) (Ext)	Loss of sealing	Structures Monitoring Program (B2.1.32)	III.A6-12	3.5.1.44	C
Caulking & Sealant	SH	Elastomer	Plant Indoor Air (Structural) (Ext)	Loss of sealing	Structures Monitoring Program (B2.1.32)	III.A6-12	3.5.1.44	C
Concrete Elements	SS	Concrete	Atmosphere/ Weather (Structural) (Ext)	Cracking due to expansion	Structures Monitoring Program (B2.1.32)	III.A3-2	3.5.1.27	A
Concrete Elements	SS	Concrete	Atmosphere/ Weather (Structural) (Ext)	Loss of material (spalling, scaling) and cracking	Structures Monitoring Program (B2.1.32)	III.A3-6	3.5.1.26	A
Concrete Elements	SS	Concrete	Atmosphere/ Weather (Structural) (Ext)	Cracking, loss of bond, and loss of material (spalling, scaling)	Structures Monitoring Program (B2.1.32)	III.A3-9	3.5.1.23	A
Concrete Elements	SS	Concrete	Atmosphere/ Weather (Structural) (Ext)	Increase in porosity and permeability, cracking, loss of material (spalling, scaling)	Structures Monitoring Program (B2.1.32)	III.A3-10	3.5.1.24	A
Concrete Elements	SS	Concrete	Buried (Structural) (Ext)	Cracking due to expansion	Structures Monitoring Program (B2.1.32)	III.A3-2	3.5.1.27	A
Concrete Elements	SS	Concrete	Buried (Structural) (Ext)	Cracks and distortion	Structures Monitoring Program (B2.1.32)	III.A3-3	3.5.1.28	A

Table 3.5.2-8 Containments, Structures, and Component Supports – Summary of Aging Management Evaluation – 230 kV Switchyard, 500 kV Switchyard, and Electrical Foundations and Structures (Continued)

Component Type	Intended Function	Material	Environment	Aging Effect Requiring Management	Aging Management Program	NUREG-1801 Vol. 2 Item	Table 1 Item	Notes
Concrete Elements	SS	Concrete	Buried (Structural) (Ext)	Cracking, loss of bond, and loss of material (spalling, scaling)	Structures Monitoring Program (B2.1.32)	III.A3-4	3.5.1.31	A
Concrete Elements	SS	Concrete	Buried (Structural) (Ext)	Increase in porosity and permeability, cracking, loss of material (spalling, scaling)	Structures Monitoring Program (B2.1.32)	III.A3-5	3.5.1.31	A
Concrete Elements	SH, SS	Concrete	Plant Indoor Air (Structural) (Ext)	Cracking due to expansion	Structures Monitoring Program (B2.1.32)	III.A3-2	3.5.1.27	A
Concrete Elements	SH, SS	Concrete	Plant Indoor Air (Structural) (Ext)	Cracking, loss of bond, and loss of material (spalling, scaling)	Structures Monitoring Program (B2.1.32)	III.A3-9	3.5.1.23	A
Concrete Elements	SH, SS	Concrete	Plant Indoor Air (Structural) (Ext)	Increase in porosity and permeability, cracking, loss of material (spalling, scaling)	Structures Monitoring Program (B2.1.32)	III.A3-10	3.5.1.24	A
Doors	SH	Carbon Steel	Atmosphere/ Weather (Structural) (Ext)	Loss of material	Structures Monitoring Program (B2.1.32)	III.A3-12	3.5.1.25	A

Table 3.5.2-8 Containments, Structures, and Component Supports – Summary of Aging Management Evaluation – 230 kV Switchyard, 500 kV Switchyard, and Electrical Foundations and Structures (Continued)

Component Type	Intended Function	Material	Environment	Aging Effect Requiring Management	Aging Management Program	NUREG-1801 Vol. 2 Item	Table 1 Item	Notes
Doors	SH	Carbon Steel	Plant Indoor Air (Structural) (Ext)	Loss of material	Structures Monitoring Program (B2.1.32)	III.A3-12	3.5.1.25	A
Duct Banks and Manholes	SH, SS	Concrete	Atmosphere/ Weather (Structural) (Ext)	Cracking due to expansion	Structures Monitoring Program (B2.1.32)	III.A3-2	3.5.1.27	A
Duct Banks and Manholes	SH, SS	Concrete	Atmosphere/ Weather (Structural) (Ext)	Loss of material (spalling, scaling) and cracking	Structures Monitoring Program (B2.1.32)	III.A3-6	3.5.1.26	A
Duct Banks and Manholes	SH, SS	Concrete	Atmosphere/ Weather (Structural) (Ext)	Cracking, loss of bond, and loss of material (spalling, scaling)	Structures Monitoring Program (B2.1.32)	III.A3-9	3.5.1.23	A
Duct Banks and Manholes	SH, SS	Concrete	Atmosphere/ Weather (Structural) (Ext)	Increase in porosity and permeability, cracking, loss of material (spalling, scaling)	Structures Monitoring Program (B2.1.32)	III.A3-10	3.5.1.24	A
Duct Banks and Manholes	SH, SS	Concrete	Buried (Structural) (Ext)	Cracking due to expansion	Structures Monitoring Program (B2.1.32)	III.A3-2	3.5.1.27	A
Duct Banks and Manholes	SH, SS	Concrete	Buried (Structural) (Ext)	Cracks and distortion	Structures Monitoring Program (B2.1.32)	III.A3-3	3.5.1.28	A
Duct Banks and Manholes	SH, SS	Concrete	Buried (Structural) (Ext)	Cracking, loss of bond, and loss of material (spalling, scaling)	Structures Monitoring Program (B2.1.32)	III.A3-4	3.5.1.31	A

Table 3.5.2-8 Containments, Structures, and Component Supports – Summary of Aging Management Evaluation – 230 kV Switchyard, 500 kV Switchyard, and Electrical Foundations and Structures (Continued)

Component Type	Intended Function	Material	Environment	Aging Effect Requiring Management	Aging Management Program	NUREG-1801 Vol. 2 Item	Table 1 Item	Notes
Duct Banks and Manholes	SH, SS	Concrete	Buried (Structural) (Ext)	Increase in porosity and permeability, cracking, loss of material (spalling, scaling)	Structures Monitoring Program (B2.1.32)	III.A3-5	3.5.1.31	A
Fire Barrier Doors	FB, SH	Carbon Steel	Plant Indoor Air (Structural) (Ext)	Loss of material	Structures Monitoring Program (B2.1.32)	III.A3-12	3.5.1.25	A
Fire Barrier Doors	FB, SH	Carbon Steel	Plant Indoor Air (Structural) (Ext)	Loss of material	Fire Protection (B2.1.12)	VII.G-3	3.3.1.63	B
Gypsum & Plaster Barrier	SH	Gypsum & Plaster	Plant Indoor Air (Structural) (Ext)	Cracking	Structures Monitoring Program (B2.1.32)	None	None	J
Hatch	SH	Carbon Steel	Plant Indoor Air (Structural) (Ext)	Loss of material	Structures Monitoring Program (B2.1.32)	III.A3-12	3.5.1.25	A
Metal Siding	SH	Carbon Steel	Atmosphere/ Weather (Structural) (Ext)	Loss of material	Structures Monitoring Program (B2.1.32)	III.A3-12	3.5.1.25	A
Metal Siding	SH	Carbon Steel	Plant Indoor Air (Structural) (Ext)	Loss of material	Structures Monitoring Program (B2.1.32)	III.A3-12	3.5.1.25	A
Roofing Membrane	SH	Elastomer	Atmosphere/ Weather (Structural) (Ext)	Loss of sealing	Structures Monitoring Program (B2.1.32)	III.A6-12	3.5.1.44	C
Structural Steel	SS	Carbon Steel	Atmosphere/ Weather (Structural) (Ext)	Loss of material	Structures Monitoring Program (B2.1.32)	III.A3-12	3.5.1.25	A

Table 3.5.2-8 Containments, Structures, and Component Supports – Summary of Aging Management Evaluation – 230 kV Switchyard, 500 kV Switchyard, and Electrical Foundations and Structures (Continued)

Component Type	Intended Function	Material	Environment	Aging Effect Requiring Management	Aging Management Program	NUREG-1801 Vol. 2 Item	Table 1 Item	Notes
Structural Steel	SS	Carbon Steel	Encased in Concrete (Ext)	None	None	VII.J-21	3.3.1.96	C
Structural Steel	SS	Carbon Steel	Plant Indoor Air (Structural) (Ext)	Loss of material	Structures Monitoring Program (B2.1.32)	III.A3-12	3.5.1.25	A
Transmission Tower	SS	Carbon Steel	Atmosphere/ Weather (Structural) (Ext)	Loss of material	Structures Monitoring Program (B2.1.32)	III.A3-12	3.5.1.25	A

Notes for Table 3.5.2-8:

Standard Note Text

A Consistent with NUREG-1801 item for component, material, environment, and aging effect. AMP is consistent with NUREG-1801 AMP.

B Consistent with NUREG-1801 item for component, material, environment, and aging effect. AMP takes some exceptions to NUREG-1801 AMP.

C Component is different, but consistent with NUREG-1801 item for material, environment, and aging effect. AMP is consistent with NUREG-1801 AMP.

J Neither the component nor the material and environment combination is evaluated in NUREG-1801.

Plant Specific Note

None

Table 3.5.2-9 Containments, Structures, and Component Supports – Summary of Aging Management Evaluation – Fuel Handling Building

Component Type	Intended Function	Material	Environment	Aging Effect Requiring Management	Aging Management Program	NUREG-1801 Vol. 2 Item	Table 1 Item	Notes
Caulking & Sealant	FLB, SH	Elastomer	Atmosphere/ Weather (Structural) (Ext)	Loss of sealing	Structures Monitoring Program (B2.1.32)	III.A6-12	3.5.1.44	A
Caulking & Sealant	FLB, SH	Elastomer	Buried (Structural) (Ext)	Loss of sealing	Structures Monitoring Program (B2.1.32)	III.A6-12	3.5.1.44	A
Caulking & Sealant	FLB, SH, SPB	Elastomer	Plant Indoor Air (Structural) (Ext)	Loss of sealing	Structures Monitoring Program (B2.1.32)	III.A6-12	3.5.1.44	A
Compressible Joints & Seals	SH, SPB	Elastomer	Plant Indoor Air (Structural) (Ext)	Loss of sealing	Structures Monitoring Program (B2.1.32)	III.A6-12	3.5.1.44	A
Concrete Elements	FLB, MB, SH, SPB, SS	Concrete	Atmosphere/ Weather (Structural) (Ext)	Cracking due to expansion	Structures Monitoring Program (B2.1.32)	III.A5-2	3.5.1.27	A
Concrete Elements	FLB, MB, SH, SPB, SS	Concrete	Atmosphere/ Weather (Structural) (Ext)	Loss of material (spalling, scaling) and cracking	Structures Monitoring Program (B2.1.32)	III.A5-6	3.5.1.26	A
Concrete Elements	FLB, MB, SH, SPB, SS	Concrete	Atmosphere/ Weather (Structural) (Ext)	Cracking, loss of bond, and loss of material (spalling, scaling)	Structures Monitoring Program (B2.1.32)	III.A5-9	3.5.1.23	A
Concrete Elements	FLB, MB, SH, SPB, SS	Concrete	Atmosphere/ Weather (Structural) (Ext)	Increase in porosity and permeability, cracking, loss of material (spalling, scaling)	Structures Monitoring Program (B2.1.32)	III.A5-10	3.5.1.24	A

Table 3.5.2-9 Containments, Structures, and Component Supports – Summary of Aging Management Evaluation – Fuel Handling Building (Continued)

Component Type	Intended Function	Material	Environment	Aging Effect Requiring Management	Aging Management Program	NUREG-1801 Vol. 2 Item	Table 1 Item	Notes
Concrete Elements	FLB, SH, SS	Concrete	Buried (Structural) (Ext)	Cracking due to expansion	Structures Monitoring Program (B2.1.32)	III.A5-2	3.5.1.27	A
Concrete Elements	FLB, SH, SS	Concrete	Buried (Structural) (Ext)	Cracks and distortion	Structures Monitoring Program (B2.1.32)	III.A5-3	3.5.1.28	A
Concrete Elements	FLB, SH, SS	Concrete	Buried (Structural) (Ext)	Cracking, loss of bond, and loss of material (spalling, scaling)	Structures Monitoring Program (B2.1.32)	III.A5-4	3.5.1.31	A
Concrete Elements	FLB, SH, SS	Concrete	Buried (Structural) (Ext)	Increase in porosity and permeability, cracking, loss of material (spalling, scaling)	Structures Monitoring Program (B2.1.32)	III.A5-5	3.5.1.31	A
Concrete Elements	FLB, SH, SS	Concrete	Buried (Structural) (Ext)	Increase in porosity and permeability, loss of strength	Structures Monitoring Program (B2.1.32)	III.A5-7	3.5.1.32	A
Concrete Elements	FB, FLB, HLBS, SH, SPB, SS	Concrete	Plant Indoor Air (Structural) (Ext)	Cracking due to expansion	Structures Monitoring Program (B2.1.32)	III.A5-2	3.5.1.27	A

Table 3.5.2-9 Containments, Structures, and Component Supports – Summary of Aging Management Evaluation – Fuel Handling Building (Continued)

Component Type	Intended Function	Material	Environment	Aging Effect Requiring Management	Aging Management Program	NUREG-1801 Vol. 2 Item	Table 1 Item	Notes
Concrete Elements	FB, FLB, HLBS, SH, SPB, SS	Concrete	Plant Indoor Air (Structural) (Ext)	Cracking, loss of bond, and loss of material (spalling, scaling)	Structures Monitoring Program (B2.1.32)	III.A5-9	3.5.1.23	A
Concrete Elements	FB, FLB, HLBS, SH, SPB, SS	Concrete	Plant Indoor Air (Structural) (Ext)	Increase in porosity and permeability, cracking, loss of material (spalling, scaling)	Structures Monitoring Program (B2.1.32)	III.A5-10	3.5.1.24	A
Concrete Elements	FB, FLB, HLBS, SH, SPB, SS	Concrete	Plant Indoor Air (Structural) (Ext)	Concrete cracking and spalling	Fire Protection (B2.1.12) and Structures Monitoring Program (B2.1.32)	VII.G-28	3.3.1.65	B
Concrete Elements	FB, FLB, HLBS, SH, SPB, SS	Concrete	Plant Indoor Air (Structural) (Ext)	Loss of material	Fire Protection (B2.1.12) and Structures Monitoring Program (B2.1.32)	VII.G-29	3.3.1.67	B
Doors	FLB, MB, SH, SPB	Carbon Steel	Atmosphere/ Weather (Structural) (Ext)	Loss of material	Structures Monitoring Program (B2.1.32)	III.A5-12	3.5.1.25	A
Doors	MB, SH, SPB	Carbon Steel	Plant Indoor Air (Structural) (Ext)	Loss of material	Structures Monitoring Program (B2.1.32)	III.A5-12	3.5.1.25	A
Expansion Joint	SS	Stainless Steel	Plant Indoor Air (Structural) (Ext)	None	None	VII.J-15	3.3.1.94	C

Table 3.5.2-9 Containments, Structures, and Component Supports – Summary of Aging Management Evaluation – Fuel Handling Building (Continued)

Component Type	Intended Function	Material	Environment	Aging Effect Requiring Management	Aging Management Program	NUREG-1801 Vol. 2 Item	Table 1 Item	Notes
Fire Barrier Doors	FB, FLB, HLBS, SH, SPB	Carbon Steel	Plant Indoor Air (Structural) (Ext)	Loss of material	Structures Monitoring Program (B2.1.32)	III.A5-12	3.5.1.25	A
Fire Barrier Doors	FB, FLB, HLBS, SH, SPB	Carbon Steel	Plant Indoor Air (Structural) (Ext)	Loss of material	Fire Protection (B2.1.12)	VII.G-3	3.3.1.63	B
Fire Barrier Seals	FB	Elastomer	Plant Indoor Air (Structural) (Ext)	Increased hardness, shrinkage and loss of strength	Fire Protection (B2.1.12)	VII.G-1	3.3.1.61	B
Gypsum & Plaster Barrier	SH, SPB	Gypsum & Plaster	Plant Indoor Air (Structural) (Ext)	Cracking	Structures Monitoring Program (B2.1.32)	None	None	J
Hatch	SH	Carbon Steel	Plant Indoor Air (Structural) (Ext)	Loss of material	Structures Monitoring Program (B2.1.32)	III.A5-12	3.5.1.25	A
Hatches & Plugs	SH	Concrete	Plant Indoor Air (Structural) (Ext)	Cracking due to expansion	Structures Monitoring Program (B2.1.32)	III.A5-2	3.5.1.27	A
Hatches & Plugs	SH	Concrete	Plant Indoor Air (Structural) (Ext)	Cracking, loss of bond, and loss of material (spalling, scaling)	Structures Monitoring Program (B2.1.32)	III.A5-9	3.5.1.23	A
Hatches & Plugs	SH	Concrete	Plant Indoor Air (Structural) (Ext)	Increase in porosity and permeability, cracking, loss of material (spalling, scaling)	Structures Monitoring Program (B2.1.32)	III.A5-10	3.5.1.24	A

Table 3.5.2-9 Containments, Structures, and Component Supports – Summary of Aging Management Evaluation – Fuel Handling Building (Continued)

Component Type	Intended Function	Material	Environment	Aging Effect Requiring Management	Aging Management Program	NUREG-1801 Vol. 2 Item	Table 1 Item	Notes
Liner Spent Fuel Pool	SPB	Stainless Steel	Encased in Concrete (Ext)	None	None	VII.J-17	3.3.1.96	C
Liner Spent Fuel Pool	SPB	Stainless Steel	Plant Indoor Air (Structural) (Ext)	None	None	VII.J-15	3.3.1.94	C
Liner Spent Fuel Pool	SPB	Stainless Steel	Submerged (Structural) (Ext)	Cracking	Water Chemistry (B2.1.2) and Monitoring of the Spent Fuel Pool Water Level	III.A5-13	3.5.1.46	A
Metal Siding	SH	Carbon Steel	Atmosphere/ Weather (Structural) (Ext)	Loss of material	Structures Monitoring Program (B2.1.32)	III.A5-12	3.5.1.25	A
Metal Siding	SH, SPB	Carbon Steel	Plant Indoor Air (Structural) (Ext)	Loss of material	Structures Monitoring Program (B2.1.32)	III.A5-12	3.5.1.25	A
Penetrations Electrical	SS	Carbon Steel	Atmosphere/ Weather (Structural) (Ext)	Loss of material	Structures Monitoring Program (B2.1.32)	III.A5-12	3.5.1.25	A
Penetrations Electrical	SS	Carbon Steel	Encased in Concrete (Ext)	None	None	VII.J-21	3.3.1.96	C
Penetrations Electrical	SS	Carbon Steel	Plant Indoor Air (Structural) (Ext)	Loss of material	Structures Monitoring Program (B2.1.32)	III.A5-12	3.5.1.25	A
Penetrations Mechanical	SS	Carbon Steel	Atmosphere/ Weather (Structural) (Ext)	Loss of material	Structures Monitoring Program (B2.1.32)	III.A5-12	3.5.1.25	A
Penetrations Mechanical	SS	Carbon Steel	Encased in Concrete (Ext)	None	None	VII.J-21	3.3.1.96	C

Table 3.5.2-9 Containments, Structures, and Component Supports – Summary of Aging Management Evaluation – Fuel Handling Building (Continued)

Component Type	Intended Function	Material	Environment	Aging Effect Requiring Management	Aging Management Program	NUREG-1801 Vol. 2 Item	Table 1 Item	Notes
Penetrations Mechanical	SS	Carbon Steel	Plant Indoor Air (Structural) (Ext)	Loss of material	Structures Monitoring Program (B2.1.32)	III.A5-12	3.5.1.25	A
Roofing Membrane	SH	Elastomer	Atmosphere/ Weather (Structural) (Ext)	Loss of sealing	Structures Monitoring Program (B2.1.32)	III.A6-12	3.5.1.44	A
Stairs, Platforms & Grates	SS	Carbon Steel	Plant Indoor Air (Structural) (Ext)	Loss of material	Structures Monitoring Program (B2.1.32)	III.A5-12	3.5.1.25	A
Structural Steel	SS	Carbon Steel	Atmosphere/ Weather (Structural) (Ext)	Loss of material	Structures Monitoring Program (B2.1.32)	III.A5-12	3.5.1.25	A
Structural Steel	SS	Carbon Steel	Encased in Concrete (Ext)	None	None	VII.J-21	3.3.1.96	C
Structural Steel	SH, SS	Carbon Steel	Plant Indoor Air (Structural) (Ext)	Loss of material	Structures Monitoring Program (B2.1.32)	III.A5-12	3.5.1.25	A

Notes for Table 3.5.2-9:

Standard Notes:

A Consistent with NUREG-1801 item for component, material, environment, and aging effect. AMP is consistent with NUREG-1801 AMP.

B Consistent with NUREG-1801 item for component, material, environment, and aging effect. AMP takes some exceptions to NUREG-1801 AMP.

C Component is different, but consistent with NUREG-1801 item for material, environment, and aging effect. AMP is consistent with NUREG-1801 AMP.

J Neither the component nor the material and environment combination is evaluated in NUREG-1801.

Plant Specific Notes:

None

Table 3.5.2-10 Containments, Structures, and Component Supports – Summary of Aging Management Evaluation – Intake Structure and Intake Control Building

Component Type	Intended Function	Material	Environment	Aging Effect Requiring Management	Aging Management Program	NUREG-1801 Vol. 2 Item	Table 1 Item	Notes
Caulking & Sealant	FLB, SH	Elastomer	Atmosphere/ Weather (Structural) (Ext)	Loss of sealing	Structures Monitoring Program (B2.1.32)	III.A6-12	3.5.1.44	A
Caulking & Sealant	FLB, SH	Elastomer	Buried (Structural) (Ext)	Loss of sealing	Structures Monitoring Program (B2.1.32)	III.A6-12	3.5.1.44	A
Caulking & Sealant	FLB, SH	Elastomer	Plant Indoor Air (Structural) (Ext)	Loss of sealing	Structures Monitoring Program (B2.1.32)	III.A6-12	3.5.1.44	A
Concrete Block (Masonry Walls)	SH, SS	Concrete Block (Masonry Walls)	Plant Indoor Air (Structural) (Ext)	Cracking	Masonry Wall Program (B2.1.31)	III.A6-10	3.5.1.43	A
Concrete Elements	FB, FLB, MB, SH, SS	Concrete	Atmosphere/ Weather (Structural) (Ext)	Cracking, loss of bond, and loss of material (spalling, scaling)	RG 1.127, Inspection of Water-Control Structures Associated with Nuclear Power Plants (B2.1.33)	III.A6-1	3.5.1.34	A
Concrete Elements	FB, FLB, MB, SH, SS	Concrete	Atmosphere/ Weather (Structural) (Ext)	Cracking due to expansion	RG 1.127, Inspection of Water-Control Structures Associated with Nuclear Power Plants (B2.1.33)	III.A6-2	3.5.1.36	A
Concrete Elements	FB, FLB, MB, SH, SS	Concrete	Atmosphere/ Weather (Structural) (Ext)	Loss of material (spalling, scaling) and cracking	RG 1.127, Inspection of Water-Control Structures Associated with Nuclear Power Plants (B2.1.33)	III.A6-5	3.5.1.35	A

Table 3.5.2-10 Containments, Structures, and Component Supports – Summary of Aging Management Evaluation – Intake Structure and Intake Control Building (Continued)

Component Type	Intended Function	Material	Environment	Aging Effect Requiring Management	Aging Management Program	NUREG-1801 Vol. 2 Item	Table 1 Item	Notes
Concrete Elements	FB, FLB, MB, SH, SS	Concrete	Atmosphere/ Weather (Structural) (Ext)	Concrete cracking and spalling	Fire Protection (B2.1.12) and Structures Monitoring Program (B2.1.32)	VII.G-30	3.3.1.66	B
Concrete Elements	FB, FLB, MB, SH, SS	Concrete	Atmosphere/ Weather (Structural) (Ext)	Loss of material	Fire Protection (B2.1.12) and Structures Monitoring Program (B2.1.32)	VII.G-31	3.3.1.67	B
Concrete Elements	FLB, SH, SS	Concrete	Buried (Structural) (Ext)	Cracking due to expansion	RG 1.127, Inspection of Water-Control Structures Associated with Nuclear Power Plants (B2.1.33)	III.A6-2	3.5.1.36	A
Concrete Elements	FLB, SH, SS	Concrete	Buried (Structural) (Ext)	Increase in porosity and permeability, cracking, loss of material (spalling, scaling)	RG 1.127, Inspection of Water-Control Structures Associated with Nuclear Power Plants (B2.1.33)	III.A6-3	3.5.1.34	A
Concrete Elements	FLB, SH, SS	Concrete	Buried (Structural) (Ext)	Cracks and distortion	Structures Monitoring Program (B2.1.32)	III.A6-4	3.5.1.28	A

Table 3.5.2-10 Containments, Structures, and Component Supports – Summary of Aging Management Evaluation – Intake Structure and Intake Control Building (Continued)

Component Type	Intended Function	Material	Environment	Aging Effect Requiring Management	Aging Management Program	NUREG-1801 Vol. 2 Item	Table 1 Item	Notes
Concrete Elements	FB, FLB, MB, SH, SS	Concrete	Plant Indoor Air (Structural) (Ext)	Cracking, loss of bond, and loss of material (spalling, scaling)	RG 1.127, Inspection of Water-Control Structures Associated with Nuclear Power Plants (B2.1.33)	III.A6-1	3.5.1.34	A
Concrete Elements	FB, FLB, MB, SH, SS	Concrete	Plant Indoor Air (Structural) (Ext)	Cracking due to expansion	RG 1.127, Inspection of Water-Control Structures Associated with Nuclear Power Plants (B2.1.33)	III.A6-2	3.5.1.36	A
Concrete Elements	FB, FLB, MB, SH, SS	Concrete	Plant Indoor Air (Structural) (Ext)	Concrete cracking and spalling	Fire Protection (B2.1.12) and Structures Monitoring Program (B2.1.32)	VII.G-28	3.3.1.65	B
Concrete Elements	FB, FLB, MB, SH, SS	Concrete	Plant Indoor Air (Structural) (Ext)	Loss of material	Fire Protection (B2.1.12) and Structures Monitoring Program (B2.1.32)	VII.G-29	3.3.1.67	B
Concrete Elements	FLB, MB, SH, SS	Concrete	Submerged (Structural) (Ext)	Increase in porosity and permeability, loss of strength	RG 1.127, Inspection of Water-Control Structures Associated with Nuclear Power Plants (B2.1.33)	III.A6-6	3.5.1.37	A

Table 3.5.2-10 Containments, Structures, and Component Supports – Summary of Aging Management Evaluation – Intake Structure and Intake Control Building (Continued)

Component Type	Intended Function	Material	Environment	Aging Effect Requiring Management	Aging Management Program	NUREG-1801 Vol. 2 Item	Table 1 Item	Notes
Concrete Elements	FLB, MB, SH, SS	Concrete	Submerged (Structural) (Ext)	Loss of material	RG 1.127, Inspection of Water-Control Structures Associated with Nuclear Power Plants (B2.1.33)	III.A6-7	3.5.1.45	A
Doors	FLB, SH	Carbon Steel	Plant Indoor Air (Structural) (Ext)	Loss of material	Structures Monitoring Program (B2.1.32)	III.A6-11	3.5.1.47	E, 1
Doors	FLB, SH	Stainless Steel	Atmosphere/ Weather (Structural) (Ext)	Loss of material	Structures Monitoring Program (B2.1.32)	III.B2-7	3.5.1.50	C
Doors	FLB, SH	Stainless Steel	Plant Indoor Air (Structural) (Ext)	None	None	III.B5-5	3.5.1.59	C
Fire Barrier Doors	FB, SH	Carbon Steel	Plant Indoor Air (Structural) (Ext)	Loss of material	Structures Monitoring Program (B2.1.32)	III.A6-11	3.5.1.47	E, 1
Fire Barrier Doors	FB, SH	Carbon Steel	Plant Indoor Air (Structural) (Ext)	Loss of material	Fire Protection (B2.1.12)	VII.G-3	3.3.1.63	B
Hatches & Plugs	FB, MB, SH	Concrete	Atmosphere/ Weather (Structural) (Ext)	Cracking, loss of bond, and loss of material (spalling, scaling)	RG 1.127, Inspection of Water-Control Structures Associated with Nuclear Power Plants (B2.1.33)	III.A6-1	3.5.1.34	A
Hatches & Plugs	FB, MB, SH	Concrete	Atmosphere/ Weather (Structural) (Ext)	Cracking due to expansion	RG 1.127, Inspection of Water-Control Structures Associated with Nuclear Power Plants (B2.1.33)	III.A6-2	3.5.1.36	A

Table 3.5.2-10 Containments, Structures, and Component Supports – Summary of Aging Management Evaluation – Intake Structure and Intake Control Building (Continued)

Component Type	Intended Function	Material	Environment	Aging Effect Requiring Management	Aging Management Program	NUREG-1801 Vol. 2 Item	Table 1 Item	Notes
Hatches & Plugs	FB, MB, SH	Concrete	Atmosphere/ Weather (Structural) (Ext)	Loss of material (spalling, scaling) and cracking	RG 1.127, Inspection of Water-Control Structures Associated with Nuclear Power Plants (B2.1.33)	III.A6-5	3.5.1.35	A
Hatches & Plugs	FB, MB, SH	Concrete	Atmosphere/ Weather (Structural) (Ext)	Concrete cracking and spalling	Fire Protection (B2.1.12) and Structures Monitoring Program (B2.1.32)	VII.G-30	3.3.1.66	B
Hatches & Plugs	FB, MB, SH	Concrete	Atmosphere/ Weather (Structural) (Ext)	Loss of material	Fire Protection (B2.1.12) and Structures Monitoring Program (B2.1.32)	VII.G-31	3.3.1.67	B
Hatches & Plugs	FB, MB, SH	Concrete	Plant Indoor Air (Structural) (Ext)	Cracking, loss of bond, and loss of material (spalling, scaling)	RG 1.127, Inspection of Water-Control Structures Associated with Nuclear Power Plants (B2.1.33)	III.A6-1	3.5.1.34	A
Hatches & Plugs	FB, MB, SH	Concrete	Plant Indoor Air (Structural) (Ext)	Cracking due to expansion	RG 1.127, Inspection of Water-Control Structures Associated with Nuclear Power Plants (B2.1.33)	III.A6-2	3.5.1.36	A

Table 3.5.2-10 Containments, Structures, and Component Supports – Summary of Aging Management Evaluation – Intake Structure and Intake Control Building (Continued)

Component Type	Intended Function	Material	Environment	Aging Effect Requiring Management	Aging Management Program	NUREG-1801 Vol. 2 Item	Table 1 Item	Notes
Hatches & Plugs	FB, MB, SH	Concrete	Plant Indoor Air (Structural) (Ext)	Concrete cracking and spalling	Fire Protection (B2.1.12) and Structures Monitoring Program (B2.1.32)	VII.G-28	3.3.1.65	B
Hatches & Plugs	FB, MB, SH	Concrete	Plant Indoor Air (Structural) (Ext)	Loss of material	Fire Protection (B2.1.12) and Structures Monitoring Program (B2.1.32)	VII.G-29	3.3.1.67	B
Metal Siding	SH	Stainless Steel	Atmosphere/ Weather (Structural) (Ext)	Loss of material	Structures Monitoring Program (B2.1.32)	III.B2-7	3.5.1.50	C
Metal Siding	SH	Stainless Steel	Plant Indoor Air (Structural) (Ext)	None	None	III.B5-5	3.5.1.59	C
Penetrations Electrical	SS	Carbon Steel	Encased in Concrete (Ext)	None	None	VII.J-21	3.3.1.96	C
Penetrations Electrical	SS	Carbon Steel	Plant Indoor Air (Structural) (Ext)	Loss of material	Structures Monitoring Program (B2.1.32)	III.A6-11	3.5.1.47	E, 1
Penetrations Mechanical	SS	Carbon Steel	Encased in Concrete (Ext)	None	None	VII.J-21	3.3.1.96	C
Penetrations Mechanical	SS	Carbon Steel	Plant Indoor Air (Structural) (Ext)	Loss of material	Structures Monitoring Program (B2.1.32)	III.A6-11	3.5.1.47	E, 1
Roofing Membrane	SH	Elastomer	Atmosphere/ Weather (Structural) (Ext)	Loss of sealing	Structures Monitoring Program (B2.1.32)	III.A6-12	3.5.1.44	A

Table 3.5.2-10 Containments, Structures, and Component Supports – Summary of Aging Management Evaluation – Intake Structure and Intake Control Building (Continued)

Component Type	Intended Function	Material	Environment	Aging Effect Requiring Management	Aging Management Program	NUREG-1801 Vol. 2 Item	Table 1 Item	Notes
Stairs, Platforms & Grates	SS	Carbon Steel	Plant Indoor Air (Structural) (Ext)	Loss of material	Structures Monitoring Program (B2.1.32)	III.A6-11	3.5.1.47	E, 1
Structural Metals	SS	Aluminum	Atmosphere/ Weather (Structural) (Ext)	Loss of material	Structures Monitoring Program (B2.1.32)	III.B2-7	3.5.1.50	A
Structural Metals	SS	Aluminum	Encased in Concrete (Ext)	None	None	None	None	J
Structural Metals	SS	Aluminum	Plant Indoor Air (Structural) (Ext)	None	None	III.B5-2	3.5.1.58	A
Structural Steel	MB, SS	Carbon Steel	Atmosphere/ Weather (Structural) (Ext)	Loss of material	Structures Monitoring Program (B2.1.32)	III.A6-11	3.5.1.47	E, 1
Structural Steel	SS	Carbon Steel	Encased in Concrete (Ext)	None	None	VII.J-21	3.3.1.96	C
Structural Steel	SH, SS	Carbon Steel	Plant Indoor Air (Structural) (Ext)	Loss of material	Structures Monitoring Program (B2.1.32)	III.A6-11	3.5.1.47	E, 1
Structural Steel	FIL, SS	Carbon Steel	Submerged (Structural) (Ext)	Loss of material	Structures Monitoring Program (B2.1.32)	III.A6-11	3.5.1.47	E, 1
Structural Steel	SH, SS	Stainless Steel	Encased in Concrete (Ext)	None	None	VII.J-17	3.3.1.96	C
Structural Steel	SH, SS	Stainless Steel	Plant Indoor Air (Structural) (Ext)	None	None	III.B5-5	3.5.1.59	C
Traveling Screen	DF, FIL, SS	Stainless Steel	Submerged (Structural) (Ext)	Loss of material	Structures Monitoring Program (B2.1.32)	None	None	J

Notes for Table 3.5.2-10:

Standard Notes:

A	Consistent with NUREG-1801 item for component, material, environment, and aging effect. AMP is consistent with NUREG-1801 AMP.
B	Consistent with NUREG-1801 item for component, material, environment, and aging effect. AMP takes some exceptions to NUREG-1801 AMP.
C	Component is different, but consistent with NUREG-1801 item for material, environment, and aging effect. AMP is consistent with NUREG-1801 AMP.
E	Consistent with NUREG-1801 for material, environment, and aging effect, but a different aging management program is credited or NUREG-1801 identifies a plant-specific aging management program.
J	Neither the component nor the material and environment combination is evaluated in NUREG-1801.

Plant Specific Notes:

1	NUREG-1801, line III.A6-11 specifies RG 1.127 Inspection of Water-Control Structures Associated with Nuclear Power Plants as the aging management program for metal components in water-control structures. RG 1.127 does not address metal components, so the Structures Monitoring Program (B2.1.32) is used.

Table 3.5.2-11 Containments, Structures, and Component Supports – Summary of Aging Management Evaluation – Earthwork and Yard Structures

Component Type	Intended Function	Material	Environment	Aging Effect Requiring Management	Aging Management Program	NUREG-1801 Vol. 2 Item	Table 1 Item	Notes
Barrier	SH	Earthfill (rip-rap, stone, soil)	Atmosphere/ Weather (Structural) (Ext)	Loss of material, loss of form	RG 1.127, Inspection of Water-Control Structures Associated with Nuclear Power Plants (B2.1.33)	III.A6-9	3.5.1.48	A
Barrier	SH	Earthfill (rip-rap, stone, soil)	Submerged (Structural) (Ext)	Loss of material, loss of form	RG 1.127, Inspection of Water-Control Structures Associated with Nuclear Power Plants (B2.1.33)	III.A6-9	3.5.1.48	A
Caulking & Sealant	SH, SPB	Elastomer	Atmosphere/ Weather (Structural) (Ext)	Loss of sealing	Structures Monitoring Program (B2.1.32)	III.A6-12	3.5.1.44	A
Caulking & Sealant	SH, SPB	Elastomer	Submerged (Structural) (Ext)	Loss of sealing	Structures Monitoring Program (B2.1.32)	III.A6-12	3.5.1.44	A
Concrete Elements	SH, SS	Concrete	Atmosphere/ Weather (Structural) (Ext)	Cracking due to expansion	Structures Monitoring Program (B2.1.32)	III.A3-2	3.5.1.27	A
Concrete Elements	SH, SS	Concrete	Atmosphere/ Weather (Structural) (Ext)	Loss of material (spalling, scaling) and cracking	Structures Monitoring Program (B2.1.32)	III.A3-6	3.5.1.26	A
Concrete Elements	SH, SS	Concrete	Atmosphere/ Weather (Structural) (Ext)	Cracking, loss of bond, and loss of material (spalling, scaling)	Structures Monitoring Program (B2.1.32)	III.A3-9	3.5.1.23	A

Table 3.5.2-11 Containments, Structures, and Component Supports – Summary of Aging Management Evaluation – Earthwork and Yard Structures (Continued)

Component Type	Intended Function	Material	Environment	Aging Effect Requiring Management	Aging Management Program	NUREG-1801 Vol. 2 Item	Table 1 Item	Notes
Concrete Elements	SH, SS	Concrete	Atmosphere/ Weather (Structural) (Ext)	Increase in porosity and permeability, cracking, loss of material (spalling, scaling)	Structures Monitoring Program (B2.1.32)	III.A3-10	3.5.1.24	A
Concrete Elements	SH, SS	Concrete	Buried (Structural) (Ext)	Cracking due to expansion	Structures Monitoring Program (B2.1.32)	III.A3-2	3.5.1.27	A
Concrete Elements	SH, SS	Concrete	Buried (Structural) (Ext)	Cracks and distortion	Structures Monitoring Program (B2.1.32)	III.A3-3	3.5.1.28	A
Concrete Elements	SH, SS	Concrete	Buried (Structural) (Ext)	Cracking, loss of bond, and loss of material (spalling, scaling)	Structures Monitoring Program (B2.1.32)	III.A3-4	3.5.1.31	A
Concrete Elements	SH, SS	Concrete	Buried (Structural) (Ext)	Increase in porosity and permeability, cracking, loss of material (spalling, scaling)	Structures Monitoring Program (B2.1.32)	III.A3-5	3.5.1.31	A
Concrete Elements	SS	Concrete	Submerged (Structural) (Ext)	Increase in porosity and permeability, loss of strength	RG 1.127, Inspection of Water-Control Structures Associated with Nuclear Power Plants (B2.1.33)	III.A6-6	3.5.1.37	A

Table 3.5.2-11 Containments, Structures, and Component Supports – Summary of Aging Management Evaluation – Earthwork and Yard Structures (Continued)

Component Type	Intended Function	Material	Environment	Aging Effect Requiring Management	Aging Management Program	NUREG-1801 Vol. 2 Item	Table 1 Item	Notes
Concrete Elements	SS	Concrete	Submerged (Structural) (Ext)	Loss of material	RG 1.127, Inspection of Water-Control Structures Associated with Nuclear Power Plants (B2.1.33)	III.A6-7	3.5.1.45	A
Hatches & Plugs	SH	Concrete	Atmosphere/ Weather (Structural) (Ext)	Cracking due to expansion	Structures Monitoring Program (B2.1.32)	III.A3-2	3.5.1.27	A
Hatches & Plugs	SH	Concrete	Atmosphere/ Weather (Structural) (Ext)	Loss of material (spalling, scaling) and cracking	Structures Monitoring Program (B2.1.32)	III.A3-6	3.5.1.26	A
Hatches & Plugs	SH	Concrete	Atmosphere/ Weather (Structural) (Ext)	Cracking, loss of bond, and loss of material (spalling, scaling)	Structures Monitoring Program (B2.1.32)	III.A3-9	3.5.1.23	A
Hatches & Plugs	SH	Concrete	Atmosphere/ Weather (Structural) (Ext)	Increase in porosity and permeability, cracking, loss of material (spalling, scaling)	Structures Monitoring Program (B2.1.32)	III.A3-10	3.5.1.24	A
Structural Steel	SS	Carbon Steel	Atmosphere/ Weather (Structural) (Ext)	Loss of material	Structures Monitoring Program (B2.1.32)	III.A3-12	3.5.1.25	A
Structural Steel	SS	Carbon Steel	Encased in Concrete (Ext)	None	None	VII.J-21	3.3.1.96	A

Table 3.5.2-11 Containments, Structures, and Component Supports – Summary of Aging Management Evaluation – Earthwork and Yard Structures (Continued)

Component Type	Intended Function	Material	Environment	Aging Effect Requiring Management	Aging Management Program	NUREG-1801 Vol. 2 Item	Table 1 Item	Notes
Tank	SPB, SS	Concrete	Submerged (Structural) (Ext)	Increase in porosity and permeability, loss of strength	RG 1.127, Inspection of Water-Control Structures Associated with Nuclear Power Plants (B2.1.33)	III.A6-6	3.5.1.37	A
Tank	SPB, SS	Concrete	Submerged (Structural) (Ext)	Loss of material	RG 1.127, Inspection of Water-Control Structures Associated with Nuclear Power Plants (B2.1.33)	III.A6-7	3.5.1.45	A

Notes for Table 3.5.2-11:

Standard Notes:

A Consistent with NUREG-1801 item for component, material, environment, and aging effect. AMP is consistent with NUREG-1801 AMP.

Plant Specific Notes:

None

Table 3.5.2-12 Containments, Structures, and Component Supports – Summary of Aging Management Evaluation – Discharge Structure

Component Type	Intended Function	Material	Environment	Aging Effect Requiring Management	Aging Management Program	NUREG-1801 Vol. 2 Item	Table 1 Item	Notes
Concrete Elements	SH, SS	Concrete	Atmosphere/ Weather (Structural) (Ext)	Cracking, loss of bond, and loss of material (spalling, scaling)	RG 1.127, Inspection of Water-Control Structures Associated with Nuclear Power Plants (B2.1.33)	III.A6-1	3.5.1.34	A
Concrete Elements	SH, SS	Concrete	Atmosphere/ Weather (Structural) (Ext)	Cracking due to expansion	RG 1.127, Inspection of Water-Control Structures Associated with Nuclear Power Plants (B2.1.33)	III.A6-2	3.5.1.36	A
Concrete Elements	SH, SS	Concrete	Atmosphere/ Weather (Structural) (Ext)	Loss of material (spalling, scaling) and cracking	RG 1.127, Inspection of Water-Control Structures Associated with Nuclear Power Plants (B2.1.33)	III.A6-5	3.5.1.35	A
Concrete Elements	SH, SS	Concrete	Buried (Structural) (Ext)	Cracking due to expansion	RG 1.127, Inspection of Water-Control Structures Associated with Nuclear Power Plants (B2.1.33)	III.A6-2	3.5.1.36	A
Concrete Elements	SH, SS	Concrete	Buried (Structural) (Ext)	Increase in porosity and permeability, cracking, loss of material (spalling, scaling)	RG 1.127, Inspection of Water-Control Structures Associated with Nuclear Power Plants (B2.1.33)	III.A6-3	3.5.1.34	A

Table 3.5.2-12 Containments, Structures, and Component Supports – Summary of Aging Management Evaluation – Discharge Structure (Continued)

Component Type	Intended Function	Material	Environment	Aging Effect Requiring Management	Aging Management Program	NUREG-1801 Vol. 2 Item	Table 1 Item	Notes
Concrete Elements	SH, SS	Concrete	Buried (Structural) (Ext)	Cracks and distortion	Structures Monitoring Program (B2.1.32)	III.A6-4	3.5.1.28	A
Concrete Elements	SH, SS	Concrete	Buried (Structural) (Ext)	Increase in porosity and permeability, loss of strength	RG 1.127, Inspection of Water-Control Structures Associated with Nuclear Power Plants (B2.1.33)	III.A6-6	3.5.1.37	A
Concrete Elements	SH, SS	Concrete	Buried (Structural) (Ext)	Loss of material	RG 1.127, Inspection of Water-Control Structures Associated with Nuclear Power Plants (B2.1.33)	III.A6-7	3.5.1.45	A
Concrete Elements	SH, SS	Concrete	Submerged (Structural) (Ext)	Increase in porosity and permeability, loss of strength	RG 1.127, Inspection of Water-Control Structures Associated with Nuclear Power Plants (B2.1.33)	III.A6-6	3.5.1.37	A
Concrete Elements	SH, SS	Concrete	Submerged (Structural) (Ext)	Loss of material	RG 1.127, Inspection of Water-Control Structures Associated with Nuclear Power Plants (B2.1.33)	III.A6-7	3.5.1.45	A

Notes for Table 3.5.2-12:

Standard Notes:

A Consistent with NUREG-1801 item for component, material, environment, and aging effect. AMP is consistent with NUREG-1801 AMP.

Plant Specific Notes:

None

Table 3.5.2-13 Containments, Structures, and Component Supports – Summary of Aging Management Evaluation – Outdoor Water Storage Tank Foundations and Encasements

Component Type	Intended Function	Material	Environment	Aging Effect Requiring Management	Aging Management Program	NUREG-1801 Vol. 2 Item	Table 1 Item	Notes
Concrete Elements	FB, MB, SS	Concrete	Atmosphere/ Weather (Structural) (Ext)	Cracking due to expansion	Structures Monitoring Program (B2.1.32)	III.A7-1	3.5.1.27	A
Concrete Elements	FB, MB, SS	Concrete	Atmosphere/ Weather (Structural) (Ext)	Loss of material (spalling, scaling) and cracking	Structures Monitoring Program (B2.1.32)	III.A7-5	3.5.1.26	A
Concrete Elements	FB, MB, SS	Concrete	Atmosphere/ Weather (Structural) (Ext)	Cracking, loss of bond, and loss of material (spalling, scaling)	Structures Monitoring Program (B2.1.32)	III.A7-8	3.5.1.23	A
Concrete Elements	FB, MB, SS	Concrete	Atmosphere/ Weather (Structural) (Ext)	Increase in porosity and permeability, cracking, loss of material (spalling, scaling)	Structures Monitoring Program (B2.1.32)	III.A7-9	3.5.1.24	A
Concrete Elements	FB, MB, SS	Concrete	Atmosphere/ Weather (Structural) (Ext)	Concrete cracking and spalling	Fire Protection (B2.1.12) and Structures Monitoring Program (B2.1.32)	VII.G-30	3.3.1.66	B
Concrete Elements	FB, MB, SS	Concrete	Atmosphere/ Weather (Structural) (Ext)	Loss of material	Fire Protection (B2.1.12) and Structures Monitoring Program (B2.1.32)	VII.G-31	3.3.1.67	B
Concrete Elements	SS	Concrete	Buried (Structural) (Ext)	Cracking due to expansion	Structures Monitoring Program (B2.1.32)	III.A7-1	3.5.1.27	A

Table 3.5.2-13 Containments, Structures, and Component Supports – Summary of Aging Management Evaluation – Outdoor Water Storage Tank Foundations and Encasements (Continued)

Component Type	Intended Function	Material	Environment	Aging Effect Requiring Management	Aging Management Program	NUREG-1801 Vol. 2 Item	Table 1 Item	Notes
Concrete Elements	SS	Concrete	Buried (Structural) (Ext)	Cracks and distortion	Structures Monitoring Program (B2.1.32)	III.A7-2	3.5.1.28	A
Concrete Elements	SS	Concrete	Buried (Structural) (Ext)	Cracking, loss of bond, and loss of material (spalling, scaling)	Structures Monitoring Program (B2.1.32)	III.A7-3	3.5.1.31	A
Concrete Elements	SS	Concrete	Buried (Structural) (Ext)	Increase in porosity and permeability, cracking, loss of material (spalling, scaling)	Structures Monitoring Program (B2.1.32)	III.A7-4	3.5.1.31	A
Structural Steel	SS	Carbon Steel	Encased in Concrete (Ext)	None	None	VII.J-21	3.3.1.96	C

Notes for Table 3.5.2-13:

Standard Notes:

A Consistent with NUREG-1801 item for component, material, environment, and aging effect. AMP is consistent with NUREG-1801 AMP.

B Consistent with NUREG-1801 item for component, material, environment, and aging effect. AMP takes some exceptions to NUREG-1801 AMP.

C Component is different, but consistent with NUREG-1801 item for material, environment, and aging effect. AMP is consistent with NUREG-1801 AMP.

Plant Specific Notes:

None

Table 3.5.2-14 Containments, Structures, and Component Supports – Summary of Aging Management Evaluation – Supports

Component Type	Intended Function	Material	Environment	Aging Effect Requiring Management	Aging Management Program	NUREG-1801 Vol. 2 Item	Table 1 Item	Notes
Cable Trays & Supports	SS	Aluminum	Plant Indoor Air (Structural) (Ext)	None	None	III.B2-4	3.5.1.58	A
Cable Trays & Supports	SS	Carbon Steel	Atmosphere/ Weather (Structural) (Ext)	Loss of material	Structures Monitoring Program (B2.1.32)	III.B2-10	3.5.1.39	A
Cable Trays & Supports	SS	Carbon Steel	Plant Indoor Air (Structural) (Ext)	Loss of material	Structures Monitoring Program (B2.1.32)	III.B2-10	3.5.1.39	A
Cable Trays & Supports	SS	Concrete	Atmosphere/ Weather (Structural) (Ext)	Reduction in concrete anchor capacity	Structures Monitoring Program (B2.1.32)	III.B2-1	3.5.1.40	A
Cable Trays & Supports	SS	Concrete	Plant Indoor Air (Structural) (Ext)	Reduction in concrete anchor capacity	Structures Monitoring Program (B2.1.32)	III.B2-1	3.5.1.40	A
Conduit And Supports	SH, SS	Aluminum	Plant Indoor Air (Structural) (Ext)	None	None	III.B2-4	3.5.1.58	A
Conduit And Supports	SH, SS	Carbon Steel	Atmosphere/ Weather (Structural) (Ext)	Loss of material	Structures Monitoring Program (B2.1.32)	III.B2-10	3.5.1.39	A
Conduit And Supports	SH, SS	Carbon Steel	Plant Indoor Air (Structural) (Ext)	Loss of material	Structures Monitoring Program (B2.1.32)	III.B2-10	3.5.1.39	A
Conduit And Supports	SS	Concrete	Atmosphere/ Weather (Structural) (Ext)	Reduction in concrete anchor capacity	Structures Monitoring Program (B2.1.32)	III.B2-1	3.5.1.40	A
Conduit And Supports	SS	Concrete	Plant Indoor Air (Structural) (Ext)	Reduction in concrete anchor capacity	Structures Monitoring Program (B2.1.32)	III.B2-1	3.5.1.40	A

Table 3.5.2-14 Containments, Structures, and Component Supports – Summary of Aging Management Evaluation – Supports (Continued)

Component Type	Intended Function	Material	Environment	Aging Effect Requiring Management	Aging Management Program	NUREG-1801 Vol. 2 Item	Table 1 Item	Notes
Conduit And Supports	SH, SS	Polyvinyl Chloride (PVC)	Buried (Structural) (Ext)	None	None	None	None	F
Conduit And Supports	SH, SS	Stainless Steel	Plant Indoor Air (Structural) (Ext)	None	None	III.B2-8	3.5.1.59	A
Electrical Panels & Enclosures	SH, SS	Carbon Steel	Atmosphere/ Weather (Structural) (Ext)	Loss of material	Structures Monitoring Program (B2.1.32)	III.B3-7	3.5.1.39	A
Electrical Panels & Enclosures	SH, SS	Carbon Steel	Plant Indoor Air (Structural) (Ext)	Loss of material	Structures Monitoring Program (B2.1.32)	III.B3-7	3.5.1.39	A
Electrical Panels & Enclosures	SS	Concrete	Atmosphere/ Weather (Structural) (Ext)	Reduction in concrete anchor capacity	Structures Monitoring Program (B2.1.32)	III.B3-1	3.5.1.40	A
Electrical Panels & Enclosures	SS	Concrete	Plant Indoor Air (Structural) (Ext)	Reduction in concrete anchor capacity	Structures Monitoring Program (B2.1.32)	III.B3-1	3.5.1.40	A
High Strength Bolting	SS	High Strength Low Alloy Steel (Bolting)	Plant Indoor Air (Structural) (Ext)	Cracking	Bolting Integrity (B2.1.7)	III.B1.1-3	3.5.1.51	B
High Strength Bolting	SS	High Strength Low Alloy Steel (Bolting)	Plant Indoor Air (Structural) (Ext)	Loss of material	Bolting Integrity (B2.1.7)	III.B1.1-4	3.5.1.51	B

Table 3.5.2-14 Containments, Structures, and Component Supports – Summary of Aging Management Evaluation – Supports (Continued)

Component Type	Intended Function	Material	Environment	Aging Effect Requiring Management	Aging Management Program	NUREG-1801 Vol. 2 Item	Table 1 Item	Notes
Instrument Panels & Racks	SH, SS	Carbon Steel	Atmosphere/ Weather (Structural) (Ext)	Loss of material	Structures Monitoring Program (B2.1.32)	III.B3-7	3.5.1.39	A
Instrument Panels & Racks	SH, SS	Carbon Steel	Plant Indoor Air (Structural) (Ext)	Loss of material	Structures Monitoring Program (B2.1.32)	III.B3-7	3.5.1.39	A
Instrument Panels & Racks	SS	Concrete	Atmosphere/ Weather (Structural) (Ext)	Reduction in concrete anchor capacity	Structures Monitoring Program (B2.1.32)	III.B3-1	3.5.1.40	A
Instrument Panels & Racks	SS	Concrete	Plant Indoor Air (Structural) (Ext)	Reduction in concrete anchor capacity	Structures Monitoring Program (B2.1.32)	III.B3-1	3.5.1.40	A
Supports	ES, SS	Carbon Steel	Plant Indoor Air (Structural) (Ext)	Loss of mechanical function	ASME Section XI, Subsection IWF (B2.1.29)	III.B1.1-2	3.5.1.54	A
Supports	ES, SS	Carbon Steel	Plant Indoor Air (Structural) (Ext)	Loss of mechanical function	ASME Section XI, Subsection IWF (B2.1.29)	III.B1.2-2	3.5.1.54	A
Supports	ES, SS	Lubrite	Plant Indoor Air (Structural) (Ext)	Loss of mechanical function	ASME Section XI, Subsection IWF (B2.1.29)	III.B1.1-5	3.5.1.56	A
Supports	ES, SS	Lubrite	Plant Indoor Air (Structural) (Ext)	Loss of material, cracking	ASME Section XI, Subsection IWF (B2.1.29)	III.B1.2-3	3.5.1.56	A

Table 3.5.2-14 Containments, Structures, and Component Supports – Summary of Aging Management Evaluation – Supports (Continued)

Component Type	Intended Function	Material	Environment	Aging Effect Requiring Management	Aging Management Program	NUREG-1801 Vol. 2 Item	Table 1 Item	Notes
Supports	ES, SS	Lubrite	Plant Indoor Air (Structural) (Ext)	Loss of mechanical function	Structures Monitoring Program (B2.1.32)	III.B2-2	3.5.1.52	A
Supports ASME 1	SS	Carbon Steel	Borated Water Leakage (Ext)	Loss of material	Boric Acid Corrosion (B2.1.4)	III.B1.1-14	3.5.1.55	A
Supports ASME 1	SS	Carbon Steel	Plant Indoor Air (Structural) (Ext)	Loss of material	ASME Section XI, Subsection IWF (B2.1.29)	III.B1.1-13	3.5.1.53	A
Supports ASME 1	SS	Concrete	Plant Indoor Air (Structural) (Ext)	Reduction in concrete anchor capacity	Structures Monitoring Program (B2.1.32)	III.B1.1-1	3.5.1.40	A
Supports ASME 1	SS	Stainless Steel	Borated Water Leakage (Ext)	None	None	III.B1.1-10	3.5.1.59	A
Supports ASME 1	SS	Stainless Steel	Plant Indoor Air (Structural) (Ext)	None	None	III.B1.1-9	3.5.1.59	A
Supports ASME 2 & 3	SS	Carbon Steel	Borated Water Leakage (Ext)	Loss of material	Boric Acid Corrosion (B2.1.4)	III.B1.2-11	3.5.1.55	A
Supports ASME 2 & 3	SS	Carbon Steel	Plant Indoor Air (Structural) (Ext)	Loss of material	ASME Section XI, Subsection IWF (B2.1.29)	III.B1.2-10	3.5.1.53	A
Supports ASME 2 & 3	SS	Concrete	Plant Indoor Air (Structural) (Ext)	Reduction in concrete anchor capacity	Structures Monitoring Program (B2.1.32)	III.B1.2-1	3.5.1.40	A
Supports ASME 2 & 3	SS	Stainless Steel	Borated Water Leakage (Ext)	None	None	III.B1.2-8	3.5.1.59	A

Table 3.5.2-14 Containments, Structures, and Component Supports – Summary of Aging Management Evaluation – Supports (Continued)

Component Type	Intended Function	Material	Environment	Aging Effect Requiring Management	Aging Management Program	NUREG-1801 Vol. 2 Item	Table 1 Item	Notes
Supports ASME 2 & 3	SS	Stainless Steel	Plant Indoor Air (Structural) (Ext)	None	None	III.B1.2-7	3.5.1.59	A
Supports HVAC Duct	SS	Carbon Steel	Plant Indoor Air (Structural) (Ext)	Loss of material	Structures Monitoring Program (B2.1.32)	III.B2-10	3.5.1.39	A
Supports HVAC Duct	SS	Concrete	Plant Indoor Air (Structural) (Ext)	Reduction in concrete anchor capacity	Structures Monitoring Program (B2.1.32)	III.B2-1	3.5.1.40	A
Supports Instrument	SS	Carbon Steel	Atmosphere/ Weather (Structural) (Ext)	Loss of material	Structures Monitoring Program (B2.1.32)	III.B2-10	3.5.1.39	A
Supports Instrument	SS	Carbon Steel	Plant Indoor Air (Structural) (Ext)	Loss of material	Structures Monitoring Program (B2.1.32)	III.B2-10	3.5.1.39	A
Supports Instrument	SS	Concrete	Atmosphere/ Weather (Structural) (Ext)	Reduction in concrete anchor capacity	Structures Monitoring Program (B2.1.32)	III.B3-1	3.5.1.40	A
Supports Instrument	SS	Concrete	Plant Indoor Air (Structural) (Ext)	Reduction in concrete anchor capacity	Structures Monitoring Program (B2.1.32)	III.B2-1	3.5.1.40	A
Supports Instrument	SS	Stainless Steel	Atmosphere/ Weather (Structural) (Ext)	Loss of material	Structures Monitoring Program (B2.1.32)	III.B2-7	3.5.1.50	A
Supports Instrument	SS	Stainless Steel	Plant Indoor Air (Structural) (Ext)	None	None	III.B2-8	3.5.1.59	A
Supports Insulation	SS	Stainless Steel	Plant Indoor Air (Structural) (Ext)	None	None	III.B2-8	3.5.1.59	A

Table 3.5.2-14 Containments, Structures, and Component Supports – Summary of Aging Management Evaluation – Supports (Continued)

Component Type	Intended Function	Material	Environment	Aging Effect Requiring Management	Aging Management Program	NUREG-1801 Vol. 2 Item	Table 1 Item	Notes
Supports Mech Equip Class 1	SS	Carbon Steel	Borated Water Leakage (Ext)	Loss of material	Boric Acid Corrosion (B2.1.4)	III.B1.1-14	3.5.1.55	A
Supports Mech Equip Class 1	SS	Carbon Steel	Plant Indoor Air (Structural) (Ext)	Loss of material	ASME Section XI, Subsection IWF (B2.1.29)	III.B1.1-13	3.5.1.53	A
Supports Mech Equip Class 1	SS	Concrete	Plant Indoor Air (Structural) (Ext)	Reduction in concrete anchor capacity	Structures Monitoring Program (B2.1.32)	III.B4-1	3.5.1.40	A
Supports Mech Equip Class 1	SS	Stainless Steel	Borated Water Leakage (Ext)	None	None	III.B1.1-10	3.5.1.59	A
Supports Mech Equip Class 1	SS	Stainless Steel	Plant Indoor Air (Structural) (Ext)	None	None	III.B1.1-9	3.5.1.59	A
Supports Mech Equip Class 2 & 3	SS	Carbon Steel	Borated Water Leakage (Ext)	Loss of material	Boric Acid Corrosion (B2.1.4)	III.B1.2-11	3.5.1.55	A
Supports Mech Equip Class 2 & 3	SS	Carbon Steel	Plant Indoor Air (Structural) (Ext)	Loss of material	ASME Section XI, Subsection IWF (B2.1.29)	III.B1.2-10	3.5.1.53	A
Supports Mech Equip Class 2 & 3	SS	Concrete	Plant Indoor Air (Structural) (Ext)	Reduction in concrete anchor capacity	Structures Monitoring Program (B2.1.32)	III.B4-1	3.5.1.40	A
Supports Mech Equip Class 2 & 3	SS	Stainless Steel	Borated Water Leakage (Ext)	None	None	III.B1.2-8	3.5.1.59	A

Table 3.5.2-14 Containments, Structures, and Component Supports – Summary of Aging Management Evaluation – Supports (Continued)

Component Type	Intended Function	Material	Environment	Aging Effect Requiring Management	Aging Management Program	NUREG-1801 Vol. 2 Item	Table 1 Item	Notes
Supports Mech Equip Class 2 & 3	SS	Stainless Steel	Plant Indoor Air (Structural) (Ext)	None	None	III.B1.2-7	3.5.1.59	A
Supports Mech Equip Non ASME	SS	Carbon Steel	Atmosphere/ Weather (Structural) (Ext)	Loss of material	Structures Monitoring Program (B2.1.32)	III.B4-10	3.5.1.39	A
Supports Mech Equip Non ASME	SS	Carbon Steel	Borated Water Leakage (Ext)	Loss of material	Boric Acid Corrosion (B2.1.4)	III.B4-11	3.5.1.55	A
Supports Mech Equip Non ASME	SS	Carbon Steel	Plant Indoor Air (Structural) (Ext)	Loss of material	Structures Monitoring Program (B2.1.32)	III.B4-10	3.5.1.39	A
Supports Mech Equip Non ASME	SS	Concrete	Atmosphere/ Weather (Structural) (Ext)	Reduction in concrete anchor capacity	Structures Monitoring Program (B2.1.32)	III.B4-1	3.5.1.40	A
Supports Mech Equip Non ASME	SS	Concrete	Plant Indoor Air (Structural) (Ext)	Reduction in concrete anchor capacity	Structures Monitoring Program (B2.1.32)	III.B4-1	3.5.1.40	A
Supports Mech Equip Non ASME	SS	Stainless Steel	Borated Water Leakage (Ext)	None	None	III.B4-9	3.5.1.59	A
Supports Mech Equip Non ASME	SS	Stainless Steel	Plant Indoor Air (Structural) (Ext)	None	None	III.B4-8	3.5.1.59	A

Table 3.5.2-14 Containments, Structures, and Component Supports – Summary of Aging Management Evaluation – Supports (Continued)

Component Type	Intended Function	Material	Environment	Aging Effect Requiring Management	Aging Management Program	NUREG-1801 Vol. 2 Item	Table 1 Item	Notes
Supports Mech Equip Non ASME	SS	Stainless Steel	Submerged (Structural) (Ext)	Loss of material	Structures Monitoring Program (B2.1.32)	None	None	J
Supports Non ASME	SS	Carbon Steel	Atmosphere/ Weather (Structural) (Ext)	Loss of material	Structures Monitoring Program (B2.1.32)	III.B2-10	3.5.1.39	A
Supports Non ASME	SS	Carbon Steel	Borated Water Leakage (Ext)	Loss of material	Boric Acid Corrosion (B2.1.4)	III.B2-11	3.5.1.55	A
Supports Non ASME	SS	Carbon Steel	Plant Indoor Air (Structural) (Ext)	Loss of material	Structures Monitoring Program (B2.1.32)	III.B2-10	3.5.1.39	A
Supports Non ASME	SS	Concrete	Atmosphere/ Weather (Structural) (Ext)	Reduction in concrete anchor capacity	Structures Monitoring Program (B2.1.32)	III.B2-1	3.5.1.40	A
Supports Non ASME	SS	Concrete	Plant Indoor Air (Structural) (Ext)	Reduction in concrete anchor capacity	Structures Monitoring Program (B2.1.32)	III.B2-1	3.5.1.40	A
Supports Non ASME	SS	Stainless Steel	Borated Water Leakage (Ext)	None	None	III.B2-9	3.5.1.59	A
Supports Non ASME	SS	Stainless Steel	Plant Indoor Air (Structural) (Ext)	None	None	III.B2-8	3.5.1.59	A

Notes for Table 3.5.2-14:

Standard Notes:

A	Consistent with NUREG-1801 item for component, material, environment, and aging effect. AMP is consistent with NUREG-1801 AMP.
B	Consistent with NUREG-1801 item for component, material, environment, and aging effect. AMP takes some exceptions to NUREG-1801 AMP.
F	Material not in NUREG-1801 for this component.
J	Neither the component nor the material and environment combination is evaluated in NUREG-1801.

Plant Specific Notes:

None

3.6 AGING MANAGEMENT OF ELECTRICAL AND INSTRUMENTATION AND CONTROLS

3.6.1 Introduction

Section 3.6 provides the results of the aging management reviews (AMRs) for those component types identified in Section 2.5, Scoping and Screening Results – Electrical and Instrument and Control Systems, subject to AMR. The electrical component types subject to AMR are discussed in the following sections:

- Cable Connections (metallic parts) (Section 2.5.1.1)
- Connectors (exposed to borated water) (Section 2.5.1.2)
- Fuse Holders (not part of a larger assembly) (Section 2.5.1.3)
- High Voltage Insulators (Section 2.5.1.4)
- Insulated Cable and Connections (Section 2.5.1.5), includes the following:
  - Electrical cables and connections not subject to 10 CFR 50.49 EQ requirements
  - Electrical cables and connections used in instrumentation circuits not subject to 10 CFR 50.49 EQ requirements that are sensitive to reduction in conductor insulation resistance
  - Inaccessible Medium-Voltage Electrical Cables not Subject to 10 CFR 50.49 EQ requirements
- Metal Enclosed Bus (Section 2.5.1.6), including the following:
  - Bus bar and connections
  - Bus enclosure
  - Bus Insulation and insulators
- Switchyard Bus and Connections (Section 2.5.1.7)
- Terminal Blocks (not part of a larger assembly) (Section 2.5.1.8)
- Transmission Conductors and Connections (Section 2.5.1.9)
- Lightning Rods (Section 2.5.1.10)

Table 3.6.1, Summary of Aging Management Evaluations in Chapter VI of NUREG-1801 for Electrical Components, provides the summary of the programs evaluated in NUREG-1801 that are applicable to component types in this Section. Table 3.6.1 uses the format of Table 1 described in Section 3.0.

3.6.2 Results

The following table summarizes the results of the AMR for the component types in the Electrical and Instrumentation and Controls area.

- Table 3.6.2-1 Electrical and Instrument and Controls – Summary of Aging Management Evaluation – Electrical Components

This table uses the format of Table 2 discussed in Section 3.0.

3.6.2.1 Materials, Environment, Aging Effects Requiring Management and Aging Management Programs

The materials from which the component types are fabricated, the environments to which they are exposed, the potential aging effects requiring management, and the aging management programs used to manage these aging effects are provided for each of the above electrical component commodities in the following subsections.

3.6.2.1.1 Cable Connections (metallic parts)

Materials

The material of construction for the cable connections (metallic parts) is:

- Various Metals Used For Electrical Contacts

Environment

The cable connections (metallic parts) are exposed to the following environments:

- Atmosphere/ Weather (Ext)
- Plant Indoor Air

Aging Effects Requiring Management

The following cable connections (metallic parts) aging effect requires management:

- Loosening of bolted connections

Aging Management Programs

The following aging management program manages the aging effects for the cable connections (metallic parts):

- Electrical Cable Connections Not Subject to 10 CFR 50.49 EQ Requirements (B2.1.35)

3.6.2.1.2 Connectors (exposed to borated water)

Materials

The material of construction for the connectors is:

- Various Metals Used For Electrical Contacts

Environment

The connectors are exposed to the following environment:

- Borated Water Leakage

Aging Effects Requiring Management

The following connectors aging effect requires management:

- Corrosion of Connector Contact Surfaces

Aging Management Programs

The following aging management program manages the aging effects for the connectors:

- Boric Acid Corrosion (B2.1.4)

3.6.2.1.3 Fuse Holders (not part of a larger assembly)

Materials

The materials of construction for fuse holders are:

- Various Insulation Material (Electrical)
- Various Metals Used For Electrical Contacts

Environment

The fuse holders are exposed to the following environments:

- Adverse Localized Environment
- Plant Indoor Air

Aging Effects Requiring Management

The following fuse holders aging effects require management:

- Embrittlement, cracking, melting, discoloration, swelling, or loss of dielectric strength leading to reduced insulation resistance (IR); electrical failure
- Fatigue

Aging Management Programs

The following aging management programs manage the aging effects for the fuse holders:

- Electrical Cables and Connections Not Subject to 10 CFR 50.49 EQ Requirements (B2.1.24)
- Fuse Holders (B2.1.34)

3.6.2.1.4 High Voltage Insulators

Materials

The materials of construction for the high voltage insulators are:

- Carbon Steel (Galvanized)
- Cement (Electrical Insulators)
- Porcelain

Environment

The high voltage insulators are exposed to the following environment:

- Atmosphere/ Weather (Ext)

Aging Effects Requiring Management

The following high voltage insulator aging effect requires management:

- Degradation of insulator quality

Aging Management Programs

The following aging management program manages the aging effects for the high voltage insulators:

- Transmission Conductor, Connections, Insulators and Switchyard Bus and Connections (B2.1.38)

3.6.2.1.5 Insulated Cables and Connections

3.6.2.1.5.1 Electrical cables and connections not subject to 10 CFR 50.49 EQ requirements

Materials

The material of construction for the electrical cable and connections not subject to 10 CFR 50.49 EQ requirements is:

- Various Organic Polymers

Environment

The electrical cable and connections not subject to 10 CFR 50.49 EQ requirements are exposed to the following environment:

- Adverse Localized Environment

Aging Effects Requiring Management

The following electrical cable and connections not subject to 10 CFR 50.49 EQ requirements aging effects require management:

- Embrittlement, cracking, melting, discoloration, swelling, or loss of dielectric strength leading to reduced insulation resistance (IR); electrical failure

Aging Management Programs

The following aging management program manages the aging effects for the cable and connections not subject to 10 CFR 50.49 EQ requirements:

- Electrical Cables and Connections Not Subject to 10 CFR 50.49 EQ Requirements (B2.1.24)

3.6.2.1.5.2 Electrical cables and connections used in instrumentation circuits not subject to 10 CFR 50.49 EQ requirements that are sensitive to reduction in conductor insulation resistance

Materials

The material of construction for the electrical cables and connections used in sensitive instrumentation circuits not subject to 10 CFR 50.49 EQ requirements is:

- Various Organic Polymers

Environment

The electrical cables and connections used in sensitive instrumentation circuits not subject to 10 CFR 50.49 EQ requirements are exposed to the following environment:

- Adverse Localized Environment

Aging Effects Requiring Management

The following electrical cables and connections used in sensitive instrumentation circuits not subject to 10 CFR 50.49 EQ requirements aging effects require management:

- Embrittlement, cracking, melting, discoloration, swelling, or loss of dielectric strength leading to reduced insulation resistance (IR); electrical failure

Aging Management Programs

The following aging management program manages the aging effects for the cable and connections used in sensitive instrumentation circuits not subject to 10 CFR 50.49 EQ requirements:

- Electrical Cables and Connections Not Subject to 10 CFR 50.49 EQ Requirements Used in Instrumentation Circuits (B2.1.25)

3.6.2.1.5.3 Inaccessible Medium Voltage Electrical Cables not subject to 10 CFR 50.49 EQ requirements

Materials

The material of construction for the inaccessible medium voltage electrical cables not subject to 10 CFR 50.49 EQ requirements is:

- Various Organic Polymers

Environment

The inaccessible medium voltage electrical cables not subject to 10 CFR 50.49 EQ requirements are exposed to the following environment:

- Adverse Localized Environment

Aging Effects Requiring Management

The following inaccessible medium voltage electrical cables not subject to 10 CFR 50.49 EQ requirements aging effects require management:

- Localized damage and breakdown of insulation leading to electrical failure

Aging Management Programs

The following aging management program manages the inaccessible medium voltage electrical cables not subject to 10 CFR 50.49 EQ requirements:

- Inaccessible Medium Voltage Cables Not Subject to 10 CFR 50.49 EQ Requirements (B2.1.26)

3.6.2.1.6 Metal Enclosed Bus

Materials

The materials of construction for metal enclosed bus are:

- Carbon Steel
- Elastomer
- Porcelain
- Various Insulation Material (Electrical)
- Various Metals Used for Electrical Contacts

Environment

Metal enclosed bus is exposed to the following environments:

- Atmosphere/ Weather (Ext)
- Plant Indoor Air

Aging Effects Requiring Management

The following metal enclosed bus aging effects require management:

- Loosening of bolted connections
- Loss of material
- Hardening and loss of strength
- Embrittlement, cracking, melting, discoloration, swelling, or loss of dielectric strength leading to reduced insulation resistance (IR); electrical failure

Aging Management Programs

The following aging management program manages the metal enclosed bus:

- Metal Enclosed Bus (B2.1.36)

3.6.2.1.7 Switchyard Bus and Connections

Materials

The material of construction for the switchyard bus and connections is:

- Various Metals Used for Electrical Contacts

Environment

The switchyard bus and connections are exposed to the following environment:

- Atmosphere/ Weather (Ext)

Aging Effects Requiring Management

The following switchyard bus and connections aging effect requires management:

- Loss of material

Aging Management Programs

The following aging management program manages the switchyard bus and connections:

- Transmission Conductor, Connections, Insulators and Switchyard Bus and Connections (B2.1.38)

3.6.2.1.8 Terminal Blocks (not part of larger assembly)

Materials

The material of construction for the terminal blocks is:

- Various Insulation Materials (Electrical)

Environment

The terminal blocks are exposed to the following environment:

- Adverse Localized Environment (Ext)

Aging Effects Requiring Management

The following terminal blocks aging effects require management:

- Embrittlement, cracking, melting, discoloration, swelling, or loss of dielectric strength leading to reduced insulation resistance (IR); electrical failure

Aging Management Programs

The following aging management program manages the aging effects for the terminal blocks:

- Electrical Cables and Connections Not Subject to 10 CFR 50.49 EQ Requirements (B2.1.24)

3.6.2.1.9 Transmission Conductors and Connections

Materials

The material of construction for the transmission conductors and connections is:

- Aluminum

Environment

The transmission conductors and connections are exposed to the following environment:

- Atmosphere/ Weather (Ext)

Aging Effects Requiring Management

The following transmission conductors and connections aging effect requires management:

- Loss of material

Aging Management Programs

The following aging management program manages the aging effects for the transmission conductors and connections:

- Transmission Conductor, Connections, Insulators and Switchyard Bus and Connections (B2.1.38)

3.6.2.1.10 Lightning Rods

Materials

The materials of construction for the lightning rods are:

- Copper Alloy

Environment

The lightning rods are exposed to the following environment:

- Atmosphere/ Weather (Ext)

Aging Effects Requiring Management

The following lightning rods aging effect require management:

- Loss of material

Aging Management Programs

The following aging management program manages the aging effects for the lightning rods:

- Fire Protection (B2.1.12)

3.6.2.2 Further Evaluation of Aging Management as Recommended by NUREG-1801

NUREG-1801 provides the basis for identifying those programs that warrant further evaluation. For the electrical and control systems, those evaluations are addressed in the following subsections.

3.6.2.2.1 Electrical Equipment Subject to Environmental Qualification

Environmental qualification (EQ) is a TLAA as defined in 10 CFR 54.3. Equipment qualification for degradation due to various aging mechanisms to which electrical equipment is subject must therefore be evaluated in accordance with 10 CFR 54.21(c)(1).

The DCPP EQ Program meets requirements of 10 CFR 50.49. Section 4.4 describes the 10 CFR 54.21(c)(1) TLAA evaluation of electrical equipment subject to 10 CFR 50.49 environmental qualification.

3.6.2.2.2 Degradation of Insulator Quality due to Presence of Any Salt Deposits and Surface Contamination, and Loss of Material due to Mechanical Wear

Salt Deposits

DCPP is a coastal plant subject to frequent and persistent wind which produces salt spray that can result in insulator contamination. Instances of corrosion resulting from the exposure of base metal on galvanized components have been observed. The DCPP plant-specific Transmission Conductor and Connections, Insulators and Switchyard Bus and Connections aging management program (B2.1.38) is an existing program that manages the aging effects of salt deposits on the in-scope high voltage insulators.

Surface Contamination

DCPP is located in an area with an average annual precipitation of 21 inches per year where the outdoor environment is not subject to industry air pollution. Minor contamination is washed away by rainfall and cumulative buildup has not been experienced and is not expected to occur. Therefore, surface contamination caused by industrial pollution is not an applicable aging effect requiring management for the period of extended operation.

Mechanical Wear

Industry experience has shown that transmission conductors are designed and installed not to swing significantly and cause insulator mechanical wear, due to wind blowing on the transmission conductors. The transmission lines from the plant to the switchyard traverse mountainous terrain, which exposes them to persistent and frequent high wind conditions. The DCPP transmission conductors are designed and installed to minimize swing reducing insulator mechanical wear. In the absence of a representative body of documented operating experience for similar operating environments to the contrary, DCPP will treat wind induced mechanical wear as an aging effect requiring management. The DCPP plant specific Transmission Conductors, Connections, Insulators and Switchyard Bus and Connections aging management program (B2.1.38) is an existing program that manages the aging effects of mechanical wear on the in-scope high voltage insulators.

3.6.2.2.3 Loss of Material due to Wind Induced Abrasion and Fatigue, Loss of Conductor Strength due to Corrosion, and Increased Resistance of Connection due to Oxidation or Loss of Pre-load

Industry experience has shown that transmission conductors are designed and installed to minimize mechanical wear due to wind induced abrasion and fatigue. The transmission lines from the plant to the switchyard traverse mountainous terrain which exposes them to persistent and frequent high wind conditions. The DCPP transmission conductors are designed and installed to minimize swing reducing conductor mechanical wear. In the absence of a representative body of documented operating experience for similar operating environments to the contrary, DCPP will treat wind induced mechanical wear as an aging effect requiring management. The DCPP plant specific Transmission Conductors, Connections, Insulators and Switchyard Bus and Connections aging management program (B2.1.38) is an existing program that manages the aging effects of mechanical wear on the in-scope conductors, switchyard bus, and connections.

DCPP is located in a coastal environment, where salt sprays could cause corrosion of the transmission and switchyard bus conductors and increased resistance of connections. Plant-specific aging management program Transmission Conductors, Connections, Insulators, and Switchyard Bus and Connections (B2.1.38) manages the effects of increased resistance of connection due to oxidation, loss of pre-load and mechanical wear.

3.6.2.2.4 Quality Assurance for Aging Management of Nonsafety-Related Components

Quality Assurance Program and Administrative Controls are discussed in Section B1.3.

3.6.2.3 Time-Limited Aging Analysis

The time-limited aging analyses identified below are associated with the electrical and instrument and controls component types. The section within Chapter 4, Time-Limited Aging Analyses, is indicated in parenthesis.

- Environmental Qualification of Electrical and Instrumentation and Control Equipment (Section 4.4, Environmental Qualification of Electric Equipment)

3.6.3 Conclusions

The Electrical and Instrument and Controls component types that are subject to AMR have been evaluated. The aging management programs selected to manage the aging effects for the Electrical and Instrument and Controls component types are identified in the summary Tables and in Section 3.6.2.1.

A description of these aging management programs is provided in Appendix B, along with a demonstration that the identified aging effects will be managed for the period of extended operation.

Therefore, based on the demonstration provided in Appendix B, the effects of aging associated with the Electrical and Instrument and Controls component types will be adequately managed so that there is reasonable assurance that the intended functions will be maintained consistent with the current licensing basis during the period of extended operation.

Table 3.6.1 Summary of Aging Management Evaluations in Chapter VI of NUREG-1801 for Electrical Components

Item Number	Component Type	Aging Effect / Mechanism	Aging Management Program	Further Evaluation Recommended	Discussion
3.6.1.01	Electrical equipment subject to 10 CFR 50.49 environmental qualification (EQ) requirements	Degradation due to various aging mechanisms	Environmental Qualification of Electric Components (B3.2)	Yes, TLAA	Environmental qualification of electric components is a TLAA. See further evaluation in Section 3.6.2.2.1.
3.6.1.02	Electrical cables, connections and fuse holders (insulation) not subject to 10 CFR 50.49 EQ requirements	Reduced insulation resistance and electrical failure due to various physical, thermal, radiolytic, photolytic, and chemical mechanisms	Electrical Cables and Connections Not Subject to 10 CFR 50.49 EQ Requirements (B2.1.24)	No	Consistent with NUREG-1801.
3.6.1.03	Conductor insulation for electrical cables and connections used in instrumentation circuits not subject to 10 CFR 50.49 EQ requirements that are sensitive to reduction in conductor insulation resistance (IR)	Reduced insulation resistance and electrical failure due to various physical, thermal, radiolytic, photolytic, and chemical mechanisms	Electrical Cables and Connections Used in Instrumentation Circuits Not Subject to 10 CFR 50.49 EQ Requirements (B2.1.25)	No	Consistent with NUREG-1801.

Table 3.6.1 Summary of Aging Management Evaluations in Chapter VI of NUREG-1801 for Electrical Components (Continued)

Item Number	Component Type	Aging Effect / Mechanism	Aging Management Program	Further Evaluation Recommended	Discussion
3.6.1.04	Conductor insulation for inaccessible medium voltage (2 kV to 35 kV) cables (e.g., installed in conduit or direct buried) not subject to 10 CFR 50.49 EQ requirements	Localized damage and breakdown of insulation leading to electrical failure due to moisture intrusion, water trees	Inaccessible Medium Voltage Cables Not Subject to 10 CFR 50.49 EQ Requirements (B2.1.26)	No	Consistent with NUREG-1801.
3.6.1.05	Connector contacts for electrical connectors exposed to borated water leakage	Corrosion of connector contact surfaces due to intrusion of borated water	Boric Acid Corrosion (B2.1.4)	No	Consistent with NUREG-1801.
3.6.1.06	Fuse Holders (not part of a larger assembly): Fuse holders – metallic clamp	Fatigue due to ohmic heating, thermal cycling, electrical transients, frequent manipulation, vibration, chemical contamination, corrosion, and oxidation	Fuse Holders (B2.1.34)	No	Consistent with NUREG-1801.
3.6.1.07	Metal enclosed bus - Bus/connections	Loosening of bolted connections due to thermal cycling and ohmic heating	Metal Enclosed Bus (B2.1.36)	No	Consistent with NUREG-1801.

Table 3.6.1 Summary of Aging Management Evaluations in Chapter VI of NUREG-1801 for Electrical Components (Continued)

Item Number	Component Type	Aging Effect / Mechanism	Aging Management Program	Further Evaluation Recommended	Discussion
3.6.1.08	Metal enclosed bus – Insulation/insulators	Reduced insulation resistance and electrical failure due to various physical, thermal, radiolytic, photolytic, and chemical mechanisms	Metal Enclosed Bus (B2.1.36)	No	Consistent with NUREG-1801.
3.6.1.09	Metal enclosed bus – Enclosure assemblies	Loss of material due to general corrosion	Structures Monitoring Program (B2.1.32)	No	Consistent with NUREG-1801 for material, environment, and aging effect, but a different aging management program Aging Management Program for Metal Enclosed Bus (B2.1.36) is credited.
3.6.1.10	Metal enclosed bus – Enclosure assemblies	Hardening and loss of strength due to elastomers degradation	Structures Monitoring Program (B2.1.32)	No	Consistent with NUREG-1801 for material, environment, and aging effect, but a different aging management program Aging Management Program for Metal Enclosed Bus (B2.1.36) is credited.

Table 3.6.1 Summary of Aging Management Evaluations in Chapter VI of NUREG-1801 for Electrical Components (Continued)

Item Number	Component Type	Aging Effect / Mechanism	Aging Management Program	Further Evaluation Recommended	Discussion
3.6.1.11	High voltage insulators	Degradation of insulation quality due to presence of any salt deposits and surface contamination, Loss of material caused by mechanical wear due to wind blowing on transmission conductors	A plant-specific aging management program is to be evaluated.	Yes	Consistent with NUREG-1801. The plant-specific aging management program(s) used to manage the aging include: Transmission Conductor, Connections, Insulators and Switchyard Bus and Connections (B2.1.38). See further evaluation in Section 3.6.2.2.2.
3.6.1.12	Transmission conductors and connections, Switchyard bus and connections	Loss of material due to wind induced abrasion and fatigue, Loss of conductor strength due to corrosion, Increased resistance of connection due to oxidation or loss of preload	A plant-specific aging management program is to be evaluated.	Yes	Consistent with NUREG-1801. The plant-specific aging management program(s) used to manage the aging include: Transmission Conductor, Connections, Insulators and Switchyard Bus and Connections (B2.1.38). See further evaluation in Section 3.6.2.2.3.

Table 3.6.1 Summary of Aging Management Evaluations in Chapter VI of NUREG-1801 for Electrical Components (Continued)

Item Number	Component Type	Aging Effect / Mechanism	Aging Management Program	Further Evaluation Recommended	Discussion
3.6.1.13	Cable Connections – Metallic parts	Loosening of bolted connections due to thermal cycling, ohmic heating, electrical transients, vibration, chemical contamination, corrosion, and oxidation	Electrical Cable Connections Not Subject to 10 CFR 50.49 Environmental Qualification Requirements (B2.1.35)	No	Consistent with NUREG-1801 with aging management program exceptions. The aging management program(s) with exceptions to NUREG-1801 include: Electrical Connections Not Subject to 10 CFR 50.49 Environmental Qualification Requirements (B2.1.35)
3.6.1.14	Fuse Holders (not part of a larger assembly) Insulation material	None	None	NA - No AEM or AMP	Consistent with NUREG-1801.

Table 3.6.2-1 Electrical and Instrument and Controls – Summary of Aging Management Evaluation – Electrical Components

Component Type	Intended Function	Material	Environment	Aging Effect Requiring Management	Aging Management Program	NUREG-1801 Vol. 2 Item	Table 1 Item	Notes
10 CFR 50.49 Electrical Equipment	EC, IN	Various Organic Polymers	Adverse Localized Environment (Ext)	Various degradation	Time-Limited Aging Analysis evaluated for the period of extended operation	VI.B-1	3.6.1.01	A
Cable Connections (Metallic Parts)	EC	Various Metals Used for Electrical Contacts	Atmosphere/ Weather (Ext)	Loosening of bolted connections	Electrical Connections Not Subject to 10 CFR 50.49 Environmental Qualification Requirements (B2.1.35)	VI.A-1	3.6.1.13	B
Cable Connections (Metallic Parts)	EC	Various Metals Used for Electrical Contacts	Plant Indoor Air (Ext)	Loosening of bolted connections	Electrical Connections Not Subject to 10 CFR 50.49 Environmental Qualification Requirements (B2.1.35)	VI.A-1	3.6.1.13	B
Connector	EC	Various Metals Used for Electrical Contacts	Borated Water Leakage (Ext)	Corrosion of connector contact surfaces	Boric Acid Corrosion (B2.1.4)	VI.A-5	3.6.1.05	A

Table 3.6.2-1 Electrical and Instrument and Controls – Summary of Aging Management Evaluation – Electrical Components

Component Type	Intended Function	Material	Environment	Aging Effect Requiring Management	Aging Management Program	NUREG-1801 Vol. 2 Item	Table 1 Item	Notes
Fuse Holder	EC, IN	Various Insulation Material (Electrical)	Adverse Localized Environment (Ext)	Embrittlement, cracking, melting, discoloration, swelling, or loss of dielectric strength leading to reduced insulation resistance (IR); electrical failure	Electrical Cables and Connections Not Subject to 10 CFR 50.49 EQ Requirements (B2.1.24)	VI.A-6	3.6.1.02	A
Fuse Holder	EC, IN	Various Insulation Material (Electrical)	Plant Indoor Air (Ext)	None	None	VI.A-7	3.6.1.14	A
Fuse Holder	EC	Various Metals Used for Electrical Contacts	Plant Indoor Air (Ext)	Fatigue	Aging Management Program for Fuse Holders (B2.1.34)	VI.A-8	3.6.1.06	A
High Voltage Insulator	SS	Carbon Steel (Galvanized)	Atmosphere/ Weather (Ext)	Degradation of insulator quality	Transmission Conductor, Connections, Insulators and Switchyard Bus and Connections (B2.1.38)	VI.A-9	3.6.1.11	E

Table 3.6.2-1 Electrical and Instrument and Controls – Summary of Aging Management Evaluation – Electrical Components

Component Type	Intended Function	Material	Environment	Aging Effect Requiring Management	Aging Management Program	NUREG-1801 Vol. 2 Item	Table 1 Item	Notes
High Voltage Insulator	SS	Carbon Steel (Galvanized)	Atmosphere/ Weather (Ext)	Loss of material	Transmission Conductor, Connections, Insulators and Switchyard Bus and Connections (B2.1.38)	VI.A-10	3.6.1.11	E
High Voltage Insulator	IN	Cement (Electrical Insulators)	Atmosphere/ Weather (Ext)	Degradation of insulator quality	Transmission Conductor, Connections, Insulators and Switchyard Bus and Connections (B2.1.38)	VI.A-9	3.6.1.11	E
High Voltage Insulator	IN	Cement (Electrical Insulators)	Atmosphere/ Weather (Ext)	Loss of material	Transmission Conductor, Connections, Insulators and Switchyard Bus and Connections (B2.1.38)	VI.A-10	3.6.1.11	E
High Voltage Insulator	IN	Porcelain	Atmosphere/ Weather (Ext)	Degradation of insulator quality	Transmission Conductor, Connections, Insulators and Switchyard Bus and Connections (B2.1.38)	VI.A-9	3.6.1.11	E
High Voltage Insulator	IN	Porcelain	Atmosphere/ Weather (Ext)	Loss of material	Transmission Conductor, Connections, Insulators and Switchyard Bus and Connections (B2.1.38)	VI.A-10	3.6.1.11	E

Table 3.6.2-1 Electrical and Instrument and Controls – Summary of Aging Management Evaluation – Electrical Components

Component Type	Intended Function	Material	Environment	Aging Effect Requiring Management	Aging Management Program	NUREG-1801 Vol. 2 Item	Table 1 Item	Notes
Insulated Cable and Connections	EC, IN	Various Organic Polymers	Adverse Localized Environment (Ext)	Embrittlement, cracking, melting, discoloration, swelling, or loss of dielectric strength leading to reduced insulation resistance (IR); electrical failure	Electrical Cables and Connections Not Subject to 10 CFR 50.49 EQ Requirements (B2.1.24)	VI.A-2	3.6.1.02	A
Insulated Cable and Connections	EC, IN	Various Organic Polymers	Adverse Localized Environment (Ext)	Embrittlement, cracking, melting, discoloration, swelling, or loss of dielectric strength leading to reduced insulation resistance (IR); electrical failure	Electrical Cables and Connections Not Subject to 10 CFR 50.49 EQ Requirements Used in Instrumentation Circuits (B2.1.25)	VI.A-3	3.6.1.03	A

Table 3.6.2-1 Electrical and Instrument and Controls – Summary of Aging Management Evaluation – Electrical Components

Component Type	Intended Function	Material	Environment	Aging Effect Requiring Management	Aging Management Program	NUREG-1801 Vol. 2 Item	Table 1 Item	Notes
Insulated Cable and Connections	EC, IN	Various Organic Polymers	Adverse Localized Environment (Ext)	Localized damage and breakdown of insulation leading to electrical failure	Inaccessible Medium Voltage Cables Not Subject to 10 CFR 50.49 EQ Requirements (B2.1.26)	VI.A-4	3.6.1.04	A
Lightning Rods	EC	Copper Alloy	Atmosphere/ Weather (Ext)	Loss of material	Fire Protection (B2.1.12)	None	None	J
Metal Enclosed Bus (Bus & Connections)	EC	Various Metals Used for Electrical Contacts	Atmosphere/ Weather (Ext)	Loosening of bolted connections	Aging Management Program for Metal Enclosed Bus (B2.1.36)	VI.A-11	3.6.1.07	A
Metal Enclosed Bus (Bus & Connections)	EC	Various Metals Used for Electrical Contacts	Plant Indoor Air (Ext)	Loosening of bolted connections	Aging Management Program for Metal Enclosed Bus (B2.1.36)	VI.A-11	3.6.1.07	A
Metal Enclosed Bus (Enclosure)	SS	Carbon Steel	Atmosphere/ Weather (Ext)	Loss of material	Aging Management Program for Metal Enclosed Bus (B2.1.36)	VI.A-13	3.6.1.09	E, 1
Metal Enclosed Bus (Enclosure)	SS	Carbon Steel	Plant Indoor Air (Ext)	Loss of material	Aging Management Program for Metal Enclosed Bus (B2.1.36)	VI.A-13	3.6.1.09	E, 1
Metal Enclosed Bus (Enclosure)	ES	Elastomer	Atmosphere/ Weather (Ext)	Hardening and loss of strength	Aging Management Program for Metal Enclosed Bus (B2.1.36)	VI.A-12	3.6.1.10	E, 1

Table 3.6.2-1 Electrical and Instrument and Controls – Summary of Aging Management Evaluation – Electrical Components

Component Type	Intended Function	Material	Environment	Aging Effect Requiring Management	Aging Management Program	NUREG-1801 Vol. 2 Item	Table 1 Item	Notes
Metal Enclosed Bus (Enclosure)	ES	Elastomer	Plant Indoor Air (Ext)	Hardening and loss of strength	Aging Management Program for Metal Enclosed Bus (B2.1.36)	VI.A-12	3.6.1.10	E, 1
Metal Enclosed Bus (Insulation & Insulators)	IN	Porcelain	Atmosphere/ Weather (Ext)	Embrittlement, cracking, melting, discoloration, swelling, or loss of dielectric strength leading to reduced insulation resistance (IR); electrical failure	Aging Management Program for Metal Enclosed Bus (B2.1.36)	VI.A-14	3.6.1.08	A
Metal Enclosed Bus (Insulation & Insulators)	IN	Porcelain	Plant Indoor Air (Ext)	Embrittlement, cracking, melting, discoloration, swelling, or loss of dielectric strength leading to reduced insulation resistance (IR); electrical failure	Aging Management Program for Metal Enclosed Bus (B2.1.36)	VI.A-14	3.6.1.08	A

Table 3.6.2-1 Electrical and Instrument and Controls – Summary of Aging Management Evaluation – Electrical Components

Component Type	Intended Function	Material	Environment	Aging Effect Requiring Management	Aging Management Program	NUREG-1801 Vol. 2 Item	Table 1 Item	Notes
Metal Enclosed Bus (Insulation & Insulators)	IN	Various Insulation Material (Electrical)	Atmosphere/ Weather (Ext)	Embrittlement, cracking, melting, discoloration, swelling, or loss of dielectric strength leading to reduced insulation resistance (IR); electrical failure	Aging Management Program for Metal Enclosed Bus (B2.1.36)	VI.A-14	3.6.1.08	A
Metal Enclosed Bus (Insulation & Insulators)	IN	Various Insulation Material (Electrical)	Plant Indoor Air (Ext)	Embrittlement, cracking, melting, discoloration, swelling, or loss of dielectric strength leading to reduced insulation resistance (IR); electrical failure	Aging Management Program for Metal Enclosed Bus (B2.1.36)	VI.A-14	3.6.1.08	A
Switchyard Bus and Connections	EC	Various Metals Used for Electrical Contacts	Atmosphere/ Weather (Ext)	Loss of material	Transmission Conductor, Connections, Insulators and Switchyard Bus and Connections (B2.1.38)	VI.A-15	3.6.1.12	E

Table 3.6.2-1 Electrical and Instrument and Controls – Summary of Aging Management Evaluation – Electrical Components

Component Type	Intended Function	Material	Environment	Aging Effect Requiring Management	Aging Management Program	NUREG-1801 Vol. 2 Item	Table 1 Item	Notes
Terminal Block	IN	Various Insulation Material (Electrical)	Adverse Localized Environment (Ext)	Embrittlement, cracking, melting, discoloration, swelling, or loss of dielectric strength leading to reduced insulation resistance (IR); electrical failure	Electrical Cables and Connections Not Subject to 10 CFR 50.49 EQ Requirements (B2.1.24)	VI.A-2	3.6.1.02	A
Transmission Conductors and Connections	EC	Aluminum	Atmosphere/ Weather (Ext)	Loss of material	Transmission Conductor, Connections, Insulators and Switchyard Bus and Connections (B2.1.38)	VI.A-16	3.6.1.12	E

Notes for Table 3.6.2-1:

Standard Notes:

A Consistent with NUREG-1801 item for component, material, environment, and aging effect. AMP is consistent with NUREG-1801 AMP.

B Consistent with NUREG-1801 item for component, material, environment, and aging effect. AMP takes some exceptions to NUREG-1801 AMP.

E Consistent with NUREG-1801 for material, environment, and aging effect, but a different aging management program is credited or NUREG-1801 identifies a plant-specific aging management program.

J Neither the component nor the material and environment combination is evaluated in NUREG-1801.

Plant Specific Notes:

1 The Metal Enclosed Bus program (B2.1.36) is used to manage the aging effects for all metal enclosed bus components.

CHAPTER 4

TIME-LIMITED AGING ANALYSES

4.0 TIME-LIMITED AGING ANALYSES

4.1 INTRODUCTION

This chapter describes the time-limited aging analyses (TLAAs) for the Diablo Canyon Power Plant (DCPP), Units 1 and 2, in accordance with 10 CFR 54.3(a) and 54.21(c). Subsequent sections in this Chapter describe TLAAs within these common general categories:

1. Neutron Embrittlement of the Reactor Vessel
2. Metal Fatigue of Vessels and Piping
3. Environmental Qualification of Electric Equipment (EQ)
4. Loss of Prestress in Concrete Containment Tendons
5. Fatigue of the Containment Liner and Penetrations
6. Other Plant-Specific TLAAs

The information on each specific TLAA within these categories is generally organized under three subheads:

Summary Description

A brief description of the TLAA topic and of the affected components.

Analysis

A description of the current licensing basis analysis, that is, of the TLAA itself, including implications for the period of extended operation.

Disposition

The disposition of the TLAA for the period of extended operation, in accordance with 10 CFR 54.21(c)(1):

- Validation - 10 CFR 54.21(c)(1)(i) - The analysis remains valid for the period of extended operation, or

- Revision - 10 CFR 54.21(c)(1)(ii) - The analysis has been projected to the end of the period of extended operation, or
- Aging Management - 10 CFR 54.21(c)(1)(iii) - The effects of aging on the intended function(s) will be adequately managed for the period of extended operation.

4.1.1 Identification of TLAAs

Survey of Design and Licensing Bases

An analysis, calculation, or evaluation is a TLAA under the 10 CFR 54 License Renewal Rule (the Rule) only if it meets all six of the 10 CFR 54.3(a) criteria:

Time-limited aging analyses, for the purposes of this part, are those licensee calculations and analyses that:

(1) Involve systems, structures, and components within the scope of license renewal;

(2) Consider the effects of aging;

(3) Involve time-limited assumptions defined by the current operating term, for example, 40 years;

(4) Were determined to be relevant by the licensee in making a safety determination;

(5) Involve conclusions or provide the basis for conclusions related to the capability of the system, structure, and component to perform its intended functions; and

(6) Are contained or incorporated by reference in the current licensing basis (CLB).

[10 CFR 54.3(a)]

The Rule requires that

(1) A list of time-limited aging analyses, as defined in §54.3, must be provided. The applicant shall demonstrate that –
    (i) The analyses remain valid for the period of extended operation;

(ii) The analyses have been projected to the end of the period of extended operation; or
(iii) The effects of aging on the intended function(s) will be adequately managed for the period of extended operation.

(2) A list must be provided of plant-specific exemptions granted pursuant to 10 CFR 50.12 and in effect that are based on time-limited aging analyses as defined in §54.3. The applicant shall provide an evaluation that justifies the continuation of these exemptions for the period of extended operation.

[10 CFR 54.21(c)]

This chapter provides these lists and dispositions, and their bases.

A list of potential TLAAs was assembled from regulatory guidance and industry experience, including

- The NUREG-1800, *Standard Review Plan for Review of License Renewal Applications for Nuclear Power Plants*, Chapter 4
- The NEI 95-10, *Industry Guideline for Implementing the Requirements of 10 CFR 54, the License Renewal Rule*
- The 10 CFR 54 Final Rule, *Statement of Considerations*
- Prior license renewal applications
- Plant-specific document reviews and interviews with plant personnel.

Keyword searches of the DCPP current licensing basis (CLB) were performed to determine whether the design or analysis feature of each potential TLAA in fact exists at DCPP and in its licensing basis, and to identify additional potential unit-specific TLAAs. The CLB search included

- The Final Safety Analysis Report (FSAR), Updated
- DCPP Technical Specifications (TS)
- The NRC Safety Evaluation Reports (SER) and Supplemental Safety Evaluation Reports (SSERs) for the original operating licenses
- Subsequent NRC Safety Evaluations (SEs)
- PG&E and NRC docketed licensing correspondence.

Only those potential TLAAs meeting all six criteria of 10 CFR 54.3(a) (above) are actual TLAAs requiring disposition in accordance with 54.21(c). The list of potential TLAAs was therefore reviewed (screened) against the six 10 CFR 54.3(a) criteria using information in the CLB and from the source documents for the potential TLAAs themselves, such as

- Vendor, NRC, and licensee topical reports
- Design calculations
- Code stress reports or code design reports
- Drawings
- Specifications

These TLAA source documents confirmed the screening and provided the information and the basis for the dispositions.

Licensing basis program documents, such as the in-service inspection (ISI) and electrical equipment environmental qualification (EQ) programs, were reviewed separately.

The EQ program includes qualification of components for the current licensed operating period. Since the scope of the EQ program is generally limited to safety-related or components with safety functions or that support safety functions, and since these qualifications support safety determinations, EQ qualifications for the design lifetime are TLAAs. The EQ program requires that individual EQ files establish the qualified life of each program component. For those components that are nearing the end of their qualified service life, the EQ Program has provisions for the components to be re-evaluated for longer service, refurbished, requalified, or replaced.

Disposition of indications discovered during in-service inspections may include qualifications for the licensed design life that are TLAAs. These are identified during the review of licensing correspondence.

4.1.2 Aging Management Review

NUREG-1801 identifies numerous aging effects that require evaluation as possible TLAAs in accordance with 10 CFR 54.21(c). Each of these was reviewed, and dispositioned as a TLAA if identified as such under the 10 CFR 54.3(a) criteria.

4.1.3 Plant Classification System

The DCPP classification system is common to US light water reactor plants with construction permits prior to 1974. The classification of structures, systems, and components (SSCs) is discussed in FSAR Section 3.2. In brief:

- Fluid systems and components are classified as Design Class I, II, and III. Design Class I SSCs are part of the reactor coolant pressure boundary or important to safety and are further categorized as DCPP Quality/Code Class I, II, or III.

- For seismic design, all Design Class I and some Design Class II SSCs are classified Seismic Category I, and must remain functional following a design earthquake (DE),[1] double design earthquake (DDE),[2] or Hosgri earthquake (HE).[3] See FSAR Section 3.2.1.
- Electrical systems and components are divided between safety-related Class 1E and others "non-Class 1E." See FSAR Section 3.11.

Other SSCs not required to meet the criteria of these design and safety classes are designed to applicable building and industrial codes, and to good practice.

4.1.4 Identification of Exemptions

The License Renewal Rule requires that an application for a renewed license include a list of plant-specific exemptions granted pursuant to 10 CFR 50.12 and in effect that are based on time-limited aging analyses as defined in §54.3. The applicant shall provide an evaluation that justifies the continuation of these exemptions for the period of extended operation consistent with 10 CFR 54.21(c)(2).

A search of docketed correspondence, the operating license, and the FSAR Update identified and listed all exemptions in effect. Each exemption in effect was then evaluated to determine whether it involved a TLAA as defined in 10 CFR 54.3.

The search found 14 10 CFR 50.12 exemptions "currently in effect" for DCPP. Of those, only one exemption, the use of the leak-before-break (LBB) evaluation of reactor coolant system piping for DCPP, Units 1 and 2, is based in part on a time-limited aging analysis. The LBB analysis is described in Section 4.3.2.12.

4.1.5 Summary of Results

Sections 4.2 through 4.7 list and describe general categories of TLAAs. They are listed in Table 4.1-1. They are presented in the order in which they appear in Section 4.2 of NUREG-1800, *Standard Review Plan for Review of License Renewal Applications for Nuclear Power Plants* (SRP).

---

[1] DE is equivalent to the operating basis earthquake (OBE) of 10 CFR 100, Appendix A.
[2] DDE is equivalent to the safe shutdown earthquake (SSE) of 10 CFR 100, Appendix A.
[3] HE is a postulated Richter magnitude 7.5 earthquake centered along an offshore zone of geologic faulting known as the "Hosgri Fault" and is specific to DCPP.

NUREG-1800 Tables 4.1-2 and 4.1-3 list examples of analyses that could be TLAAs, depending on the applicant's CLB. Table 4.1-2 summarizes the results of the DCPP review of the analyses identified in SRP Tables 4.1-2 and 4.1-3.

Table 4.1-1 List of TLAAs

TLAA Category	Description	Disposition Category[(a)]	Section
1.	**Reactor Vessel Neutron Embrittlement Analysis**	NA	**4.2**
	Neutron Fluence Values	ii, iii	4.2.1
	Pressurized Thermal Shock	ii, iii	4.2.2
	Charpy Upper-Shelf Energy	ii	4.2.3
	Pressure - Temperature Limits	iii	4.2.4
	Low Temperature Overpressure Protection	iii	4.2.4
2.	**Metal Fatigue Analysis**	NA	**4.3**
	DCPP Fatigue Management Program	NA	4.3.1
	ASME Section III Class A Fatigue Analysis of Vessels, Piping, and Components	NA	4.3.2
	Reactor Pressure Vessel, Nozzles, and Studs	i, iii	4.3.2.1
	Reactor Vessel Closure Head and Associated Components	i	4.3.2.2
	Reactor Coolant Pump Pressure Boundary Components	i, iii	4.3.2.3
	Pressurizer and Pressurizer Nozzles	i, ii, iii	4.3.2.4
	Steam Generator ASME Section III Class 1, Class 2 Secondary Side, and Feedwater Nozzle Fatigue Analyses and Fatigue Qualification Tests	i	4.3.2.5
	Absence of TLAA for Reactor Coolant System Boundary Valves	NA	4.3.2.6

Table 4.1-1 List of TLAAs

TLAA Category	Description	Disposition Category[(a)]	Section
	Reactor Coolant Pressure Boundary Piping	NA	4.3.2.7
	Absence of Supplemental Fatigue Analysis TLAAs in Response to Bulletin 88-08 for Intermittent Thermal Cycles due to Thermal-Cycle-Driven Interface Valve Leaks and Similar Cyclic Phenomena	NA	4.3.2.8
	Bulletin 88-11 Revised Fatigue Analysis of the Pressurizer Surge Line for Thermal Cycling and Stratification	iii	4.3.2.9
	Absence of a TLAA for Thermal Embrittlement of Cast Austenitic Stainless Steel (CASS) Reactor Coolant Pumps	NA	4.3.2.10
	Absence of a Cumulative Fatigue Usage Factor TLAA to Determine High Energy Line Break (HELB) Locations	NA	4.3.2.11
	TLAAs in Fatigue Crack Growth Assessments and Fracture Mechanics Stability Analyses for Leak-Before-Break (LBB) Elimination of Dynamic Effects of Primary Loop Piping Failures	iii	4.3.2.12
	Fatigue Analyses of the Reactor Pressure Vessel Internals	iii	4.3.3
	Effects of the Reactor Coolant System Environment on Fatigue Life of Piping and Components (Generic Safety Issue 190)	i, iii	4.3.4
	Assumed Thermal Cycle Count for Allowable Secondary Stress Range Reduction Factor in ANSI B31.1 Piping	i	4.3.5
	Fatigue Design and Analysis of Class IE Electrical Raceway Support Angle Fittings for Seismic Events	i	4.3.6
3.	**Environmental Qualification of Electric Equipment**	iii	**4.4**
4.	**Concrete Containment Tendon Prestress Analysis**	NA	**4.5**
5.	**Containment Liner Plate, Metal Containments, And Penetrations Fatigue Analysis**	NA	**4.6**

Table 4.1-1 List of TLAAs

TLAA Category	Description	Disposition Category[(a)]	Section
	Absence of a TLAA for Containment Concrete and Liner Plate	NA	4.6.1
	Design Cycles for Containment Penetrations	i, iii	4.6.2
6.	**Plant-Specific Time-Limited Aging Analyses**	NA	**4.7**
	Crane Load Cycle Limits	i	4.7.1
	TLAAs Supporting Repair of Alloy 600 Materials	i	4.7.2
	Absence of a TLAA for Reactor Vessel Underclad Cracking Analyses	NA	4.7.3
	Absence of a TLAA for a Reactor Coolant Pump Flywheel Fatigue Crack Growth Analysis	NA	4.7.4
	Inservice Flaw Growth Analyses that Demonstrate Structural Stability for 40 Years	i, iii	4.7.5
7.	**TLAAs Supporting 10 CFR 50.12 Exemptions**	NA	**4.8**

[a] (i) - 10 CFR 54.21(c)(1)(i) – Validation: Demonstration that "The analyses remain valid for the period of extended operation,"
(ii) - 10 CFR 54.21(c)(1)(ii) – Revision: Demonstration that "The analyses have been projected to the end of the period of extended operation," or
(iii) - 10 CFR 54.21(c)(1)(iii) – Aging Management: Demonstration that "The effects of aging on the intended function(s) will be adequately managed for the period of extended operation."
NA - Not Applicable – Section heading or no TLAA, disposition categories are not applicable

Table 4.1-2 Review of Analyses Listed in NUREG-1800 Tables 4.1-2 and 4.1-3

NUREG-1800 Examples	Applicability to DCPP	Section
NUREG-1800, Table 4.1-2 – Potential TLAAs		
Reactor vessel neutron embrittlement	Yes	4.2
Concrete containment tendon prestress	No – DCPP does not have prestressed containment tendons.	4.5
Metal fatigue	Yes	4.3
Environmental qualification of electrical equipment	Yes	4.4
Metal corrosion allowance	No – No explicit analysis based on plant life applies.	-
Inservice flaw growth analyses that demonstrate structure stability for 40 years	Yes	4.7.5
Inservice local metal containment corrosion analyses	No – No explicit analysis based on plant life applies.	-
High-energy line-break postulation based on fatigue cumulative usage factor	No – The high-energy line-break postulation is based on stress criteria.	4.3.2.11
NUREG-1800, Table 4.1-3 – Additional Examples of Plant-Specific TLAAs		
Intergranular separation in the heat-affected zone (HAZ) of reactor vessel low-alloy steel under austenitic SS cladding	No – No HAZ analyses were identified within the CLB.	4.7.3
Low-temperature overpressure (LTOP) analyses	Yes	4.2.4
Fatigue analysis for the main steam supply lines to the turbine-driven auxiliary feedwater pumps	Yes	4.3.5
Fatigue analysis for the reactor coolant pump flywheel	No – No explicit analysis based on plant life applies.	4.7.4
Fatigue analysis of polar crane	Yes	4.7.1

Table 4.1-2 Review of Analyses Listed in NUREG-1800 Tables 4.1-2 and 4.1-3

NUREG-1800 Examples	Applicability to DCPP	Section
Flow-induced vibration endurance limit, transient cycle count assumptions, and ductility reduction of fracture toughness for the reactor vessel internals	No – Protection from flow induced vibration is ensured via testing at DCPP and does not include a TLAA Yes No – DCPP is designed with no explicit embrittlement analysis based on the plant life for internals.	4.3.3
Leak-before-break	Yes	4.3.2.12
Fatigue analysis for the containment liner plate	No – No fatigue or cycle based analysis supports design of the liner.	4.6.1
Containment penetration pressurization cycles	Yes	4.6.2
Reactor vessel circumferential weld inspection relief (BWR)	No – DCPP is a PWR.	-

4.2 REACTOR VESSEL NEUTRON EMBRITTLEMENT ANALYSIS

Reactor pressure vessel materials are subject to embrittlement, primarily due to exposure to neutron radiation. FSAR Section 5.2.4 contains data on vessel material composition, properties, and the vessel coupon surveillance program.

Neutron embrittlement is the term used to describe changes in mechanical properties of reactor vessel materials that result from exposure to fast neutron fluence of greater than 1×10^{17} neutrons/cm^2 (E>1.0 MeV) within the vicinity of the reactor core, called the beltline region. The beltline region of a reactor vessel is defined as:

> …the region of the reactor vessel (shell material including welds, heat-affected zones and plates and forgings) that directly surrounds the effective height of the active core and adjacent regions of the reactor vessel that are predicted to experience sufficient neutron radiation damage to be considered in the selection of the most limiting material with regard to radiation damage.
>
> [10 CFR 50.61, Paragraph (a)(3)]

The most pronounced material change is a reduction in fracture toughness. As fracture toughness decreases with cumulative fast neutron exposure, the material's resistance to crack propagation decreases. The rate of neutron exposure is defined as neutron flux, and the cumulative degree of exposure over time is defined as neutron fluence. Fracture toughness of ferritic materials is not only dependent upon fluence, but is also dependent upon temperature. The reference temperature for nil-ductility transition (RT_{NDT}) is an indicator of the transition temperature range above which the material behaves in a ductile manner, and below which it behaves in a brittle manner. As fluence increases, the nil-ductility reference temperature increases. This means higher temperatures are required for the material to continue to act in a ductile manner. This shift in reference temperature is the ΔRT_{NDT}. The adjusted reference temperature (ART) is the initial RT_{NDT} plus ΔRT_{NDT} plus a margin term to account for uncertainties as prescribed in Regulatory Guide 1.99, Revision 2, and is used to determine operating pressure-temperature limits.

In accordance with 10 CFR 50, Appendix H, any materials exceeding 1×10^{17} n/cm^2 (E>1.0 MeV) must be monitored to evaluate the changes in fracture toughness. Reactor vessel materials not previously identified as beltline material because of low levels of neutron radiation must therefore be evaluated to determine whether they

will exceed the 1 x 10^{17} n/cm^2 fluence threshold at end-of-license extended (EOLE) (extended beltline material), and must therefore be evaluated for the effects of neutron embrittlement. The basis for EOLE is assumed to be 54 effective full power years (EFPY) based on a lifetime capacity factor of 90 percent for 60 years.

The following sections address calculations affected by the extended life of the plant:

- Neutron Fluence Values (Section 4.2.1)
- Pressurized Thermal Shock (PTS) (Section 4.2.2)
- Charpy Upper-Shelf Energy (C_V USE) (Section 4.2.3)
- Pressure-Temperature (P-T) Limits (Section 4.2.4)
- Low Temperature Overpressure Protection (LTOP) (Section 4.2.4)

The limits and analyses in these sections are part of the licensing basis, and support the safety determinations and TS operating limits. The analyses for reduction of fracture toughness and the EOLE neutron fluence depend on the life of the plant, and their calculations are TLAAs and must be dispositioned for the period of extended operation.

4.2.1 Neutron Fluence Values

Summary Description

Loss of fracture toughness is an aging effect caused by the neutron embrittlement aging mechanism that results from prolonged exposure to neutron radiation. This process results in increased tensile strength and hardness of the material with reduced toughness. The rate of neutron exposure is defined as neutron flux, and the cumulative degree of exposure over time is defined as neutron fluence. As neutron embrittlement progresses, the toughness/temperature curve shifts down (lower fracture toughness as indicated by Charpy upper-shelf energy or C_V USE), and the curve shifts to the right (brittle/ductile transition temperature increases). Neutron fluence projections are made in order to estimate the effect on these reactor vessel material properties (Section 4.2.2 and Section 4.2.3), and to determine if additional reactor vessel materials will be exposed to fluence greater than 1 x 10^{17} n/cm^2 (E>1.0 MeV) as a result of license renewal (extended beltline).

Analysis

Unit 1

The last capsule withdrawn and tested from Unit 1 was Capsule V at the end-of-cycle (EOC) 11. At that point, Unit 1 had operated for 14.27 EFPY. This capsule had a lead factor of 2.26 resulting in an exposure equivalent to 32.25 EFPY of operation. The results were documented in WCAP-15958 [Reference 2].

This exposure is less than that expected at EOLE. In PG&E Letter DCL-08-021, PG&E requested a change to the withdrawal date of Unit 1 Capsule B from 20.7 EFPY to 21.9 EFPY in order to capture enough fluence data for EOLE. The change was approved by the NRC in a Safety Evaluation dated September 24, 2008, *Diablo Canyon Nuclear Power Plant, Unit No. 1 – Approval of Proposed Reactor Vessel Material Surveillance Capsule Withdrawal Schedule (TAC No. MD8371)* [Reference 13].

Unit 2

The last remaining capsule withdrawn and tested from Unit 2 was Capsule V at EOC 9. At that point, Unit 2 had operated for 11.49 EFPY. This capsule had a lead factor of 4.58 resulting in an exposure equivalent to 52.62 EFPY of operation. This exposure is comparable to the predicted EOLE exposure of 54 EFPY, i.e., within the 20 percent limit specified as the acceptance criteria in Regulatory Guide 1.190. The results were documented in WCAP-15423 [Reference 3].

Both Units

Based on the results of the Capsule V analyses provided by Westinghouse in WCAP-15958 [Reference 2], for Unit 1 Cycles 1-11 and WCAP-15782 [Reference 17], for Unit 2 Cycles 1-10, the peak calculated fast neutron fluence values at the inner surface of the DCPP reactor vessels are shown in Table 4.2-1 and Table 4.2-2. These fluence data tabulations include fuel cycle specific exposures through the end of Cycle 11 (Unit 1) and Cycle 10 (Unit 2) as well as fluence projections at several intervals out to 54 EFPY. The fluence values were projected using ENDF-B/VI cross sections, and the Capsule V analyses meet the requirements of Regulatory Guide 1.190, *Calculational and Dosimetry Methods for Determining Pressure Vessel Neutron Fluence*.

The calculations account for a Unit 1 core power uprate from 3338 MWt to 3411 MWt at the onset of Cycle 11. Fluence projections beyond the end of Cycle 11 on Unit 1 and Cycle 10 on Unit 2 are based on the assumption that the spatial core

power distributions are defined by the average of Unit 1 Cycles 5-11 and Unit 2 Cycles 5-10. Power distributions for Cycles 1-4 on both Units are not included since they are not representative of the very low leakage core loading patterns now being used.

For license renewal, Westinghouse performed additional calculations to define which materials in the DCPP pressure vessels, other than beltline materials, are projected to exceed the threshold neutron fluence of $1x10^{17}$ n/cm^2 at 54 EFPY (extended beltline materials). The results of these calculations are documented in LTR-REA-09-90, *Neutron Fluence Evaluation for the Diablo Canyon Units 1 and 2 Reactor Pressure Vessel Extended Beltline Materials* [Reference 37]. The extended beltline material for both Units includes the upper shell plates, associated longitudinal welds, and the upper shell to intermediate shell circumferential weld.

Table 4.2-3 shows the EOLE fluence values for all beltline and extended beltline materials for both Units 1 and 2.

As discussed in Section B2.1.15, both units currently use ex-vessel monitoring dosimetry.

Disposition: Revision, 10 CFR 54.21(c)(1)(ii); and Aging Management, 10 CFR 54.21(c)(1)(iii)

Revision

The fluence projections were revised to quantify expected fluence at the end of the period of extended operation in accordance with 10 CFR 54.21(c)(1)(ii).

Aging Management

Neutron fluence will be monitored and its effects managed for the period of extended operation by the DCPP Reactor Vessel Surveillance program, which is summarized in Section B2.1.15. The validity of these parameters and the analyses that depend upon them will therefore be managed to the end of the period of extended operation in accordance with 10 CFR 54.21(c)(1)(iii).

Table 4.2-1 Unit 1 Maximum Calculated Fluence (E>1.0 MeV)

Cycle	Cumulative Irradiation Time (EFPY)	Neutron Fluence (E>1.0 MeV) [n/cm^2]			
		0°	15°	30°	45°
11	14.27	2.19 E+18	3.52 E+18	4.39 E+18	6.07 E+18
Projection	16.00	2.44 E+18	3.91 E+18	4.86 E+18	6.68 E+18
Projection	24.00	3.59 E+18	5.81 E+18	7.12 E+18	9.62 E+18
Projection	32.00	4.75 E+18	7.71 E+18	9.39 E+18	1.26 E+19
Projection	40.00	5.91 E+18	9.61 E+18	1.17 E+19	1.55 E+19
Projection	48.00	7.07 E+18	1.15 E+19	1.39 E+19	1.84 E+19
Projection	54.00	7.94 E+18	1.29 E+19	1.56 E+19	2.06 E+19

Table 4.2-2 Unit 2 Maximum Calculated Fluence (E>1.0 MeV)

Cycle	Cumulative Irradiation Time (EFPY)	Neutron Fluence (E>1.0 MeV) [n/cm^2]			
		0°	15°	30°	45°
10	12.88	3.26 E+18	4.93 E+18	4.92 E+18	5.79 E+18
Projection	16.00	4.01 E+18	6.04 E+18	6.03 E+18	7.11 E+18
Projection	24.00	5.93 E+18	8.89 E+18	8.90 E+18	1.05 E+19
Projection	32.00	7.86 E+18	1.18 E+19	1.18 E+19	1.39 E+19
Projection	40.00	9.79 E+18	1.46 E+19	1.46 E+19	1.73 E+19
Projection	48.00	1.17 E+19	1.75 E+19	1.75 E+19	2.06 E+19
Projection	54.00	1.32 E+19	1.96 E+19	1.96 E+19	2.32 E+19

Table 4.2-3 Units 1 and 2 Calculated Fluence (E>1.0 MeV) Values at EOLE (54 EFPY)

Unit 1		Unit 2	
Material	**Fluence [n/cm^2]**	**Material**	**Fluence [n/cm^2]**
Upper Shell Plate[(a)]		Upper Shell Plate[(a)]	
B4105-1	2.86 E+17	B5453-1	5.20 E+17
B4105-2	2.86 E+17	B5453-3	5.20 E+17
B4105-3	2.86 E+17	B5011-1R	5.20 E+17
Intermediate Shell Plate		Intermediate Shell Plate	
B4106-1	2.06 E+19	B5454-1	2.32 E+19
B4106-2	2.06 E+19	B5454-2	2.32 E+19
B4106-3	2.06 E+19	B5454-3	2.32 E+19
Lower Shell Plate		Lower Shell Plate	
B4107-1	2.04 E+19	B5455-1	2.30 E+19
B4107-2	2.04 E+19	B5455-2	2.30 E+19
B4107-3	2.04 E+19	B5455-3	2.30 E+19
Upper Shell Long. Welds[(a)]		Upper Shell Long. Welds[(a)]	
1-442 A	2.16 E+17	1-201 A	5.10 E+17
1-442 B	1.27 E+17	1-201 B	4.82 E+17
1-442 C	2.57 E+17	1-201 C	3.93 E+17
Upper Shell to Intermed. Shell Weld[(a)]		Upper Shell to Intermed. Shell Weld[(a)]	
8-442	2.86 E+17	8-201	5.20 E+17
Intermed. Shell Long. Welds		Intermed. Shell Long. Welds	
2-442 A	1.56 E+19	2-201 A	1.32 E+19
2-442 B	1.56 E+19	2-201 B	1.59 E+19
2-442 C	7.95 E+18	2-201 C	1.35 E+19
Intermed. Shell to Lower Shell Weld		Intermed. Shell to Lower Shell Weld	
9-442	2.04 E+19	9-201	2.30 E+19

Table 4.2-3 Units 1 and 2 Calculated Fluence (E>1.0 MeV) Values at EOLE (54 EFPY)

Unit 1			Unit 2	
Material	**Fluence [n/cm^2]**		**Material**	**Fluence [n/cm^2]**
Lower Shell Long. Welds			Lower Shell Long. Welds	
3-442 A	1.28 E+19		3-201 A	1.33 E+19
3-442 B	1.28 E+19		3-201 B	1.31 E+19
3-442 C	2.04 E+19		3-201 C	1.57 E+19

[a] Extended beltline material

4.2.2 Pressurized Thermal Shock

Summary Description

10 CFR 50.61(b)(1) provides requirements for protection against pressurized thermal shock (PTS) events for pressurized water reactors. Licensees are required to perform an updated assessment of the projected values of reference temperature whenever a significant change occurs in projected values of the adjusted reference temperature for pressurized thermal shock (RT_{PTS}), or upon request for a change in the expiration date for the operation of the facility.

Irradiation by high energy neutrons raises the value of RT_{NDT} for the reactor vessel. The initial RT_{NDT} is determined through testing of unirradiated material specimens. The shift in reference temperature, ΔRT_{NDT}, is the difference in the 30 ft-lb index temperatures from the average Charpy curves measured before and after irradiation. Regulatory Guide 1.99 defines the calculation methods for ΔRT_{NDT} (and end-of-life C_V USE). RT_{PTS} is defined as the RT_{NDT} value evaluated at the end of life fluence at the clad/base metal interface for each of the vessel beltline materials.
10 CFR 50.61(c) provides two methods for determining RT_{PTS}. These methods are also described as Positions 1 and 2 in Regulatory Guide 1.99. Position 1 applies for material that *does not* have credible surveillance data available and Position 2 is used for material that *does* have two or more credible surveillance data sets available. The criteria for credible data are also provided in Regulatory Guide 1.99.

The adjusted reference temperatures are calculated for both Positions 1 and 2 by following the guidance in Regulatory Guide 1.99 (Sections 1.1 and 2.1, respectively), using the copper and nickel content of DCPP reactor vessel materials, and the EOLE fluence projections. 10 CFR 50.61(b)(2) establishes screening criteria for RT_{PTS} as 270°F for plates, forgings, and axial welds and 300°F for circumferential welds. If the RT_{PTS} does not exceed the PTS screening criteria, then only the reactor pressure vessel is relied on to demonstrate compliance with 10 CFR 50.61, the PTS rule.

Analysis

PG&E's original response to the issuance of the PTS rule, 10 CFR 50.61, indicated that the projected RT_{PTS} for both units do not exceed the PTS screening criteria, 270°F, and 300°F, based on 32 EFPY.

Since Cycle 1, several actions taken by PG&E have resulted in changes to input parameters used to calculate RT_{PTS}. Fluence projections for both units were reduced following Cycle 1 as a result of fuel management changes to lower-leakage core designs. Also, copper and nickel content for the Unit 1 beltline longitudinal welds have been updated to reflect chemical analyses performed for the evaluation of surveillance capsules. 10 CFR 50.61 was revised in June 1991, which changed the method used to calculate RT_{PTS}.

The most recent coupon examination results for both units show that the increase in RT_{NDT} in plate and weld materials are bounded by that predicted by Regulatory Guide 1.99 Revision 2 for Units 1 and 2. The results demonstrate that the DCPP reactor vessel material ages consistent with Regulatory Guide 1.99 predictions, and provide a conservative means to satisfy the requirement of 10 CFR 50.61; thus providing assurance of the reactor vessel integrity.

Unit 1

The data from the most recently withdrawn surveillance capsule, Capsule V, were not deemed credible [Reference 2, Appendix D]. Using Regulatory Guide 1.99 Position 1.1 methods, RT_{PTS} values were generated for beltline and extended beltline region materials of the Unit 1 reactor vessel for EOLE fluence values. The RT_{PTS} values for the Unit 1 materials are provided in Table 4.2-4. The projected RT_{PTS} values for EOLE did not meet the 10 CFR 50.61 screening criteria in all cases. The calculation [Reference 14] indicates the limiting weld material for Unit 1 is lower shell longitudinal (axial) weld 3-442C with a projected EOLE RT_{PTS} value of 280.4°F. Lower shell longitudinal weld 3-442C will satisfy the PTS screening criteria until approximately 43 EFPY. All other materials meet the 10 CFR 50.61 screening

criteria. The limiting plate material on Unit 1 is the lower shell plate B4107-1 with a projected EOLE RT_{PTS} value of 156.2°F.

The Unit 1 reactor vessel fluence will continue to be monitored in accordance with 10 CFR 50.61 as part of the DCPP Reactor Vessel Surveillance program (B2.1.15) to ensure that the reactor vessel material does not violate the PTS criteria.

In 2009, the NRC approved the Final Rule 10 CFR 50.61a, *Alternate Fracture Toughness Requirements for Protection Against Pressurized Thermal Shock Events* [Reference 15]. The revised rule amended its regulations to provide updated fracture toughness requirements based on updated analysis methods for protection against PTS events for PWR pressure vessels. It is anticipated that DCPP Unit 1 will meet these revised requirements through EOLE.

PG&E will implement the revised PTS (10 CFR 50.61a) rule at least three years prior to exceeding the PTS screening criterion of 10 CFR 50.61. In the event that the provisions of 10 CFR 50.61a cannot be met, PG&E will implement alternate options, such as flux reduction, as provided in 10 CFR 50.61.

The extended beltline materials were also evaluated. The results (Table 4.2-4) confirm the materials will not become limiting.

Unit 2

The data from the most recently withdrawn surveillance capsule, Capsule V, was deemed credible [Reference 3, Appendix D]. RT_{PTS} values were generated for beltline and extended beltline region materials of the Unit 2 reactor vessel for fluence values at EOLE. The RT_{PTS} values for the Unit 2 materials are provided in Table 4.2-5. The projected RT_{PTS} values for EOLE meet the 10 CFR 50.61 screening criteria. The calculation [Reference 14] indicates that the limiting weld material for Unit 2 is intermediate shell longitudinal (axial) weld 2-201B with a projected EOLE RT_{PTS} value of 244.2°F using Regulatory Guide 1.99 Position 1.1. The limiting plate material on Unit 2 is the intermediate shell plate B5454-2 with a projected EOLE RT_{PTS} value of 223.2°F.

The extended beltline materials were also evaluated. The results (Table 4.2-5) confirm the materials will not become limiting.

Disposition: Revision, 10 CFR 54.21(c)(1)(ii); and Aging Management, 10 CFR 54.21(c)(1)(iii)

Unit 1 – Aging Management

The Unit 1 reactor vessel fluence will continue to be monitored as part of the DCPP Reactor Vessel Surveillance program (B2.1.15) and its effects will be adequately managed to the end of the period of extended operation in accordance with 10 CFR 54.21(c)(1)(iii).

Unit 2 - Revision

The RT_{PTS} was projected to the end of the period of extended operation in accordance with 10 CFR 54.21(c)(1)(ii). RT_{PTS} remains within acceptable values for the period of extended operation.

Table 4.2-4 DCPP Unit 1 Vessel RT_{PTS} at 54 EFPY

Material Description			Source	Chemical Composition		Chemistry Factors °F	Initial RT_{NDT} °F	EOLE Fluence 10^{19} n/cm^2 E>1.0 MeV	Fluence Factor	ΔRT_{PTS} °F	Margin °F	RT_{PTS} °F	Screening Criteria °F	Extended Beltline Region
Location	Heat No.	Type		Cu Wt%	Ni Wt%									
Upper Shell Plate B4105-1	C2624	A 533B	Ref. 14	0.120	0.56	82.2	28	0.0286	0.2136	17.6	38.3	83.8	≤270	Yes
Upper Shell Plate B4105-2	C2624-2	A 533B	Ref. 14	0.120	0.57	82.4	9	0.0286	0.2136	17.6	38.3	64.9	≤270	Yes
Upper Shell Plate B4105-3	C2608-2B	A 533B	Ref. 14	0.140	0.56	98.2	14	0.0286	0.2136	21.0	39.9	74.9	≤270	Yes
Intermediate Shell Plate B4106-1	C2884-1	A 533B	Ref. 14	0.125	0.53	85.3	-10	2.06	1.1968	102.1	34	126.1	≤270	No
Intermediate Shell Plate B4106-2	C2854-2	A 533B	Ref. 14	0.12	0.50	81	-3	2.06	1.1968	96.9	34	127.9	≤270	No
Intermediate Shell Plate B4106-3	C2793-1	A 533B	Ref. 14	0.086	0.476	55.2	30	2.06	1.1968	66.1	48.1	144.1	≤270	No
Lower Shell Plate B4107-1	C3121-1	A 533B	Ref. 14	0.13	0.56	89.8	15	2.04	1.1943	107.2	34	156.2	≤270	No
Lower Shell Plate B4107-2	C3131-2	A 533B	Ref. 14	0.12	0.56	82.2	20	2.04	1.1943	98.2	34	152.2	≤270	No
Lower Shell Plate B4107-3	C3131-1	A 533B	Ref. 14	0.12	0.52	81.4	-22	2.04	1.1943	97.2	34	109.2	≤270	No
Upper Shell Long. Weld 1-442 A	27204 / 12008	Linde 1092	Ref. 14	0.190	0.970	215.7	-20	0.0216	0.1804	38.9	38.9	57.8	≤270	Yes
Upper Shell Long. Weld 1-442 B	27204 / 12008	Linde 1092	Ref. 14	0.190	0.970	215.7	-20	0.0127	0.1287	27.8	27.8	35.5	≤270	Yes
Upper Shell Long. Weld 1-442 C	27204 / 12008	Linde 1092	Ref. 14	0.190	0.970	215.7	-20	0.0257	0.2004	43.2	43.2	66.5	≤270	Yes

Table 4.2-4 DCPP Unit 1 Vessel RT_{PTS} at 54 EFPY

Material Description			Source	Chemical Composition		Chemistry Factors °F	Initial RT_{NDT} °F	EOLE Fluence 10^{19} n/cm^2 E>1.0 MeV	Fluence Factor	ΔRT_{PTS} °F	Margin °F	RT_{PTS} °F	Screening Criteria °F	Extended Beltline Region
Location	Heat No.	Type		Cu Wt%	Ni Wt%									
Upper Shell to Intermediate Shell Circumferential Weld 8-442	13253	Linde 1092	Ref. 14	0.25	0.730	197.5	-56	0.0286	0.2136	42.2	54.2	40.4	≤300	Yes
Intermediate Shell Long. Welds 2-442A, B	27204	Linde 1092	Ref. 14	0.203	1.018	226.8	-56	1.56	1.1229	254.7	65.5	264.2	≤270	No
Intermediate Shell Long. Weld 2-442C	27204	Linde 1092	Ref. 14	0.203	1.018	226.8	-56	0.795	0.9356	212.2	65.5	221.7	≤270	No
Lower Shell Long. Welds 3-442A, B	27204	Linde 1092	Ref. 14	0.203	1.018	226.8	-56	1.28	1.0687	242.4	65.5	251.9	≤270	No
Lower Shell Long. Weld 3-442C	27204	Linde 1092	Ref. 14	0.203	1.018	226.8	-56	2.04	1.1943	270.9	65.5	280.4	≤270	No
Intermediate to Lower Shell Circumferential Weld 9-442	21935	Linde 1092	Ref. 14	0.183	0.704	172.2	-56	2.04	1.1943	205.7	65.5	215.2	≤300	No

Table 4.2-5 DCPP Unit 2 Vessel RT_{PTS} at 54 EFPY

Material Description			Source	Chemical Composition		Chemistry Factors °F	Initial RT_{NDT} °F	Fluence 10^{19} n/cm^2 E >1.0MeV	Fluence Factor	ΔRT_{PTS} °F	Margin °F	RT_{PTS} °F	Screening Criteria °F	Extended Beltline Region
Location	Heat No.	Type		Cu Wt%	Ni Wt%									
Upper Shell Plate B5453-1	C5162-1	A 533B	Ref. 14	0.110	0.600	74	28	0.0520	0.2990	22.1	22.1	72.2	≤270	Yes
Upper Shell Plate B5453-3	C5162-2	A 533B	Ref. 14	0.110	0.600	74	5	0.0520	0.2990	22.1	40.6	67.7	≤270	Yes
Upper Shell Plate B5011-1R	C4377-1	A 533B	Ref. 14	0.110	0.650	74.8	0	0.0520	0.2990	22.4	40.7	63.1	≤270	Yes
Intermediate Shell Plate B5454-1	C5161-1	A 533B	Ref. 14	0.140	0.650	98.6	52	2.32	1.2274	121.0	17	190.0	≤270	No
Intermediate Shell Plate B5454-2	C5168-2	A 533B	Ref. 14	0.14	0.59	99.6	67	2.32	1.2274	122.2	34	223.2	≤270	No
Intermediate Shell Plate B5454-3	C5161-2	A 533B	Ref. 14	0.15	0.62	110.5	33	2.32	1.2274	135.6	34	202.6	≤270	No
Lower Shell Plate B5455-1	C5175-1	A 533B	Ref. 14	0.14	0.56	98.2	-15	2.30	1.2252	120.3	34	139.3	≤270	No
Lower Shell Plate B5455-2	C5175-2	A 533B	Ref. 14	0.14	0.56	98.2	0	2.30	1.2252	120.3	34	154.3	≤270	No
Lower Shell Plate B5455-3	C5176-1	A 533B	Ref. 14	0.1	0.62	65.2	15	2.30	1.2252	79.9	34	128.9	≤270	No
Upper Shell Long. Weld 1-201 A	21935 / 12008	Linde 1092	Ref. 14	0.220	0.870	211.2	-50	0.0510	0.2959	62.5	56.0	68.5	≤270	Yes
Upper Shell Long. Weld 1-201 B	21935 / 12008	Linde 1092	Ref. 14	0.220	0.870	211.2	-50	0.0482	0.2870	60.6	56.0	66.6	≤270	Yes
Upper Shell Long. Weld 1-201 C	21935 / 12008	Linde 1092	Ref. 14	0.220	0.870	211.2	-50	0.0393	0.2564	54.1	54.1	58.3	≤270	Yes

Table 4.2-5 DCPP Unit 2 Vessel RT_{PTS} at 54 EFPY

Material Description			Source	Chemical Composition		Chemistry Factors °F	Initial RT_{NDT} °F	Fluence 10^{19} n/cm^2 E >1.0MeV	Fluence Factor	ΔRT_{PTS} °F	Margin °F	RT_{PTS} °F	Screening Criteria °F	Extended Beltline Region
Location	Heat No.	Type		Cu Wt%	Ni Wt%									
Upper Shell to Intermediate Shell Circumferential Weld 8-201	21935	Linde 1092	Ref. 14	0.183	0.704	172.2	-56	0.0520	0.2990	51.5	61.7	57.2	≤300	Yes
Intermediate Shell Long. Weld 2-201A	2193 / 12008	Linde 1092	Ref. 14	0.22	0.87	211.2	-50	1.32	1.0772	227.5	56	233.5	≤270	No
Intermediate Shell Long. Weld 2-201B	2193 / 12008	Linde 1092	Ref. 14	0.22	0.87	211.2	-50	1.59	1.1281	238.2	56	244.2	≤270	No
Intermediate Shell Long. Weld 2-201C	2193 / 12008	Linde 1092	Ref. 14	0.22	0.87	211.2	-50	1.35	1.0834	228.8	56	234.8	≤270	No
Lower Shell Long. Weld 3-201A	33A277	Linde 124	Ref. 14	0.258	0.165	126.3	-56	1.33	1.0793	136.3	65.5	145.8	≤270	No
Lower Shell Long. Weld 3-201B	33A277	Linde 124	Ref. 14	0.258	0.165	126.3	-56	1.31	1.0751	135.8	65.5	145.3	≤270	No
Lower Shell Long. Weld 3-201C	33A277	Linde 124	Ref. 14	0.258	0.165	126.3	-56	1.57	1.1246	142.0	65.5	151.6	≤270	No
Intermediate to Lower Shell Circumferential Weld 9-201	10120	Linde 0091	Ref. 14	0.046	0.082	34	-56	2.30	1.2252	41.7	53.8	39.4	≤300	No

4.2.3 Charpy Upper-Shelf Energy

Summary Description

Per Regulatory Guide 1.99, *Radiation Embrittlement of Reactor Vessel Materials*, the Charpy upper-shelf energy (C_V USE) is assumed to decrease as a function of fluence and copper content. Figure 2 of the guide determines this magnitude of decrease when surveillance data is not used (Position 1.2). In addition, if surveillance data is to be used (Position 2.2), the decrease in upper shelf energy may be obtained by plotting the plant surveillance data on Figure 2 of the guide and fitting the data with a line drawn parallel to the existing lines as the upper bound of all the data. This line can then be used in preference to the existing line. The C_V USE can be predicted using the corresponding 1/4T fluence projection, the copper content of the beltline materials, and the results of the capsules tested to date using Figure 2 of the guide.

10 CFR 50, Appendix G requires that the reactor vessel beltline materials must have a C_V USE of no less than 75 ft-lb initially, and must maintain C_V USE throughout the life of the vessel of no less than 50 ft-lb unless it is demonstrated in a manner approved by the Director, Office of Nuclear Reactor Regulation, that lower values of C_V USE will provide margins of safety against fracture equivalent to those required by ASME Section XI, Appendix G (10 CFR 50, Appendix G, Section IV.A.1.a).

Analysis

The most recent coupon examination results for both units show that the decline in C_V USE in plate and weld materials are bounded by that originally predicted by Regulatory Guide 1.99, Revision 2. Thus the results demonstrate that the DCPP reactor vessel material ages consistently with Regulatory Guide 1.99 predictions and provides a conservative means to satisfy the requirements of 10 CFR 50, Appendix G. This provides assurance of the reactor vessel integrity.

Unit 1

In accordance with Regulatory Guide 1.99, the C_V USE data from Unit 1 surveillance Capsule V were determined not to be credible and were, therefore, not included in the EOLE C_V USE projections.

The C_V USE values were projected to 54 EFPY of operation using Regulatory Guide 1.99 Position 1.2. The EOLE C_V USE values for the Unit 1 beltline and extended

beltline materials are provided in Table 4.2-6. The limiting value was 58.5 ft-lbf for lower shell longitudinal weld 3-442C.

The extended beltline materials were also evaluated to confirm they will not decrease below the 10 CFR 50, Appendix G criterion of 50 ft-lbf.

Unit 2

In accordance with Regulatory Guide 1.99, the C_V USE data from Unit 2 surveillance Capsule V were deemed credible for intermediate shell plate B5454-1.

The C_V USE values were projected to 54 EFPY of operation using Regulatory Guide 1.99 Position 1.2. The EOLE C_V USE values for the Unit 2 beltline and extended beltline materials are provided in Table 4.2-7. The limiting value was 53.7 ft-lbf for lower shell longitudinal weld 3-201C.

The extended beltline materials were also evaluated to confirm they will not decrease below the 10 CFR 50, Appendix G criterion of 50 ft-lbf.

Disposition: Revision, 10 CFR 54.21(c)(1)(ii)

The C_V USE values were re-evaluated with projections to the end of the period of extended operation in accordance with 10 CFR 54.21(c)(1)(ii). The re-evaluations demonstrated that the C_V USE in the limiting material of each unit will remain above the 10 CFR 50 Appendix G acceptance criterion of 50 ft-lbf for the period of extended operation.

Table 4.2-6 DCPP Unit 1 Reactor Vessel Material C_V USE at EOLE

Material Description			Cu wt%	Unirradiated C_V USE ft-lbf	EOL ¼T Fluence 10^{19} n/cm^2 (E>1 MeV)	% Drop in C_V USE	Projected C_V USE ft-lbf	EOL C_V USE Acceptance Criterion ft-lbf
Reactor Vessel Beltline Region Location	**Heat Number**	**Type**						
Intermediate Shell Plate B4106-1	C2884-1	A 533B	0.125	116	1.20	22	90.0	≥50
Intermediate Shell Plate B4106-2	C2854-2	A 533B	0.12	114	1.20	22	89.0	≥50
Intermediate Shell Plate B4106-3	C2793-1	A 533B	0.086	77	1.20	18	62.8	≥50
Lower Shell Plate B4107-1	C3121-1	A 533B	0.13	110	1.19	23	84.8	≥50
Lower Shell Plate B4107-2	C3131-2	A 533B	0.12	103	1.19	22	80.5	≥50
Lower Shell Plate B4107-3	C3131-1	A 533B	0.12	116	1.19	22	90.6	≥50
Intermediate Shell Long. Welds 2-442A, B	27204	Linde 1092	0.203	91	0.908	34	60.5	≥50
Intermediate Shell Long. Weld 2-442C	27204	Linde 1092	0.203	91	0.463	29	64.9	≥50
Lower Shell Long. Welds 3-442A, B	27204	Linde 1092	0.203	91	0.745	32	61.8	≥50
Lower Shell Long. Weld 3-442C	27204	Linde 1092	0.203	91	1.19	36	58.5	≥50
Intermediate Shell to Lower Shell Circumferential Weld 9-442	21935	Linde 1092	0.183	109	1.19	34	72.4	≥50
Upper Shell Plate B4105-1	C2624	A 533B	0.120	80	0.017	8	73.6	≥50
Upper Shell Plate B4105-2	C2624-2	A 533B	0.120	74	0.017	8	68.1	≥50
Upper Shell Plate B4105-3	C2608-2B	A 533B	0.140	81	0.017	9	73.9	≥50
Upper Shell Long. Weld 1-442A	27204/12008	Linde 1092	0.190	86	0.013	12	75.7	≥50

Table 4.2-6 DCPP Unit 1 Reactor Vessel Material C_V USE at EOLE

Material Description			Cu wt%	Unirradiated C_V USE ft-lbf	EOL ¼T Fluence 10^{19} n/cm^2 (E>1 MeV)	% Drop in C_V USE	Projected C_V USE ft-lbf	EOL C_V USE Acceptance Criterion ft-lbf
Reactor Vessel Beltline Region Location	**Heat Number**	**Type**						
Upper Shell Long. Weld 1-442B	27204/12008	Linde 1092	0.190	86	0.007	11	76.9	≥50
Upper Shell Long. Weld 1-442C	27204/12008	Linde 1092	0.190	86	0.015	13	75.2	≥50
Upper Shell to Intermediate Shell Weld 8-442	13253	Linde 1092	0.250	111	0.017	15	94.1	≥50

Table 4.2-7 DCPP Unit 2 Reactor Vessel Material C_V USE at EOLE

Material Description			Cu wt%	Unirradiated C_V USE ft-lbf	EOL ¼T Fluence 10^{19} n/cm^2 (E>1 MeV)	% Drop in C_V USE	Projected C_V USE ft-lbf	EOL C_V USE Acceptance Criterion ft-lbf
Reactor Vessel Beltline Region Location	Heat Number	Type						
Intermediate Shell Plate B5454-1	C5161-1	A 533B	0.14	91	1.35	25	68.5	≥50
Intermediate Shell Plate B5454-2	C5168-2	A 533B	0.14	99	1.35	25	74.6	≥50
Intermediate Shell Plate B5454-3	C5161-2	A 533B	0.15	90	1.35	26	66.8	≥50
Lower Shell Plate B5455-1	C5175-1	A 533B	0.14	112	1.34	25	84.4	≥50
Lower Shell Plate B5455-2	C5175-2	A 533B	0.14	122	1.34	25	92.0	≥50
Lower Shell Plate B5455-3	C5176-1	A 533B	0.1	100	1.34	20	79.6	≥50
Intermediate Shell Long. Weld 2-201A	2193/12008	Linde 1092	0.22	118	0.768	38	73.6	≥50
Intermediate Shell Long. Weld 2-201B	2193/12008	Linde 1092	0.22	118	0.925	39	71.6	≥50
Intermediate Shell Long. Weld 2-201C	2193/12008	Linde 1092	0.22	118	0.785	38	73.3	≥50
Lower Shell Long. Weld 3-201A	33A277	Linde 124	0.258	88	0.774	38	55.0	≥50
Lower Shell Long. Weld 3-201B	33A277	Linde 124	0.258	88	0.762	37	55.1	≥50
Lower Shell Long. Weld 3-201C	33A277	Linde 124	0.258	88	0.913	39	53.7	≥50
Intermediate Shell to Lower Shell Circumferential Weld 9-201	10120	Linde 0091	0.046	125	1.34	20	100.1	≥50
Upper Shell Plate B5453-1	C5162-1	A 533B	0.110	82	0.030	9	74.8	≥50
Upper Shell Plate B5453-3	C5162-2	A 533B	0.110	86.5	0.030	9	78.9	≥50

Table 4.2-7 DCPP Unit 2 Reactor Vessel Material C_V USE at EOLE

Material Description			Cu wt%	Unirradiated C_V USE ft-lbf	EOL ¼T Fluence 10^{19} n/cm^2 (E>1 MeV)	% Drop in C_V USE	Projected C_V USE ft-lbf	EOL C_V USE Acceptance Criterion ft-lbf
Reactor Vessel Beltline Region Location	Heat Number	Type						
Upper Shell Plate B5011-1R	C4377-1	A 533B	0.110	72	0.030	9	65.7	≥50
Upper Shell Long. Weld 1-201A	21935/12008	Linde 1092	0.220	118	0.030	18	96.9	≥50
Upper Shell Long. Weld 1-201B	21935/12008	Linde 1092	0.220	118	0.028	18	97.2	≥50
Upper Shell Long. Weld 1-201C	21935/12008	Linde 1092	0.220	118	0.023	17	98.1	≥50
Upper Shell to Intermediate Shell Weld 8-201	21935	Linde 1092	0.183	109	0.030	14	93.3	≥50

4.2.4 Pressure - Temperature Limits

Summary Description

Appendix G of 10 CFR 50 requires that reactor vessel boltup, hydrotest, pressure tests, normal operation, and anticipated operational occurrences be accomplished within established pressure-temperature (P-T) limits. These limits are established by calculations that utilize the material properties (adjusted reference temperature, ART), the effect of fluence on material properties obtained from the reactor surveillance capsules, and methodology of Appendix G of the ASME Boiler and Pressure Vessel Code, Section XI.

P-T limits are operating limits and are required by TS. The limits are presented as curves in the *Pressure Temperature Limits Report* (PTLR), and are valid up to the analyzed vessel fluence limit stated in EFPY. The P-T limit curves must be revised prior to operating beyond that fluence limit. Currently, one set of curves bounds the operation of both Units 1 and 2.

These methods depend on the limiting ART of the beltline material and cause the calculation of the P-T limits to be a TLAA. Withdrawal and testing of surveillance coupons verifies that the limiting ART used in the P-T curve bounds the aging of the reactor vessel material. References 2 and 3 summarize the material fracture toughness results from the latest surveillance capsule examination, Capsule V, for Units 1 and 2, respectively.

Low-temperature overpressure protection (LTOP) is provided by the cold overpressurization mitigation system (COMS). The temperature setpoint is determined by the calculation of the P-T limit curves. Any changes to the RCS P-T limit curves also require an evaluation of the LTOP enable temperature setpoint and the power operated relief valve (PORV) pressure setpoint, and supporting safety analyses.

Disposition: Aging Management, 10 CFR 54.21(c)(1)(iii)

P-T Limit Curves

The provisions of 10 CFR 50, Appendix G, require DCPP to operate within the currently licensed P-T limit curves. These curves are required to be maintained and updated as necessary to maintain plant operation consistent with 10 CFR 50. The DCPP Reactor Vessel Surveillance program (B2.1.15) will maintain the P-T limit

curves for the period of extended operation in accordance with 10 CFR 54.21(c)(1)(iii).

LTOP COMS Setpoints

The COMS setpoints and temperature limits are established in the PTLR [Reference 1]. Since any changes to the RCS P-T limit curves also require an evaluation of the LTOP enable temperature setpoint, the PORV pressure setpoint, and supporting safety analyses, the COMS setpoints and analyses will also be managed for the period of extended operation by the DCPP Reactor Vessel Surveillance program (B2.1.15) in accordance with 10 CFR 54.21(c)(1)(iii).

4.3 METAL FATIGUE ANALYSIS

Summary Description

Section 4.3.1 describes the Fatigue Management Program at DCPP, and the present and projected status of monitored locations. The remaining sections in Section 4.3 address the design of mechanical system components supported by fatigue analyses; and also components whose design depends on an assumed number of load cycles without a calculated fatigue usage factor. The purpose of the Fatigue Management Program is to ensure that the assumptions used in these analyses remain valid.

Fatigue analyses are required for piping, vessels, and heat exchangers designed to American Society of Mechanical Engineers *Boiler and Pressure Vessel Code,* Section III, *Rules for Construction of Nuclear Power Plant Components,* Class A (ASME Section III Class A).

Basis of Fatigue Analyses

ASME Section III Class A design specifications define a set of static and transient load conditions for which components are to be designed. Although the DCPP operating licenses are for 40 years, the DCPP design specifications commonly state that the transient conditions are for a 50-year design life. The fatigue analyses are based on the specified number of cycles of each transient rather than on the design or licensed life. Based on engineering experience and judgment, the design number of cycles of each transient for use in the fatigue analyses was specified to be larger than the number of cycles expected during the 50-year design life of the plant. This provides a margin of safety and an allowance for future changes in design or operation that may affect system design transients.

Operating experience at DCPP and at other similar facilities has demonstrated that the assumed frequencies of design transients, and therefore the number of transient cycles assumed for a 50-year life, were conservative; and that with few exceptions the design number of cycles for a given transient is not expected to be exceeded during a 60-year life. The exceptions are addressed in the discussions of affected components in this chapter.

4.3.1 DCPP Fatigue Management Program

In accordance with DCPP TS 5.5.5, *Component Cyclic or Transient Limit*, the existing DCPP Fatigue Management Program uses manual cycle counting,

automatic cycle counting, and cumulative usage factor tracking to ensure that actual plant experience remains bounded by the design assumptions and calculations reflected in the FSAR. The program was prepared, verified, and validated under a 10 CFR 50 Appendix B quality assurance program for plant-specific implementation at DCPP.

The existing Fatigue Management Program established design transient limits based on FSAR Table 5.2-4. No transient limits included in the existing Fatigue Management Program have been approached or exceeded. Therefore, the program has been effective in assuring that the reactor coolant pressure boundary components have not been exposed to more transient cycles than are provided in FSAR Table 5.2-4. The existing DCPP Fatigue Management Program will be enhanced for the period of extended operation, as summarized in Section 4.3.1.1, Section 4.3.1.2, and Section B3.1.

4.3.1.1 Enhanced DCPP Fatigue Management Program

The enhanced DCPP Fatigue Management Program (also referred to as the Metal Fatigue of Reactor Coolant Pressure Boundary program, which is summarized in Section B3.1) will use the FatiguePro monitoring software, and will monitor more transients and locations (including the NUREG/CR-6260 locations for an older vintage Westinghouse Plant) than the existing Fatigue Management Program to more accurately determine cumulative fatigue usage. The enhanced program will track the cycles of the transients listed in Table 4.3-2 and monitor the cumulative usage factors (CUFs) at the locations listed in Table 4.3-1 using one of the following methods:

(1) The “Global” monitoring method: Transient event cycles affecting the location (e.g. plant heatup and plant cooldown) are counted to ensure that the numbers of transient events assumed by the design basis calculations are not exceeded.

(2) The Cycle Based Fatigue (CBF) monitoring method: This monitoring method includes: (1) automated cycle counting; supported as needed by manual data entry for infrequent events, and (2) periodic CUF calculation based on the counted cycles. This management method is part of the existing DCPP Fatigue Management Program.

Table 4.3-1 Summary of Monitored Fatigue Usage, and Method of Management by the Enhanced DCPP Fatigue Management Program

Component	Maximum Design CUF		Fatigue Management Method
	Unit 1	Unit 2	
RPV Closure Studs	0.7537	0.7537	Global
Inlet Nozzle / Support Pad[(a)]	0.142	0.142	Global
Outlet Nozzle / Support Pad[(a)]	0.311	0.311	Global
RPV Core Support Pads	0.892	0.892	Global
RPV Bottom Head to Shell[(a)]	0.0102	0.0102	CBF
Hot Leg Surge Nozzle[(a)]	0.5387	0.5387	CBF
Pressurizer Spray Nozzle	0.9469	0.7840	Global
Pressurizer Heater Penetration	0.9391	0.5442	Global
Unit 2 Pressurizer Upper Head and Shell	NA	0.7598	Global
RCS Cold Leg Charging Line Nozzle[(a)]	0.0641	0.0641	CBF
Accumulator Safety Injection Nozzle[(a)(b)]	2.6353	2.6353	CBF
RHR-to-Accumulator Safety Injection Line Tee[(a)]	0.0093381	0.0093381	CBF

---

[a] Location is a NUREG/CR-6260 location for older vintage Westinghouse plants.
[b] For further discussion of the Accumulator Safety Injection Nozzle design CUF of greater than 1.0, refer to Section 4.3.4.

Corrective Action Limits and Corrective Actions

The enhanced DCPP Fatigue Management Program provides for evaluation of fatigue usage and cycle count tracking of critical thermal and pressure transients to verify that the ASME Code CUF limit of 1.0 and other CUF design limits will not be exceeded. The program requires this evaluation at least once per fuel cycle.

The enhanced program specifies corrective actions to be implemented to ensure that appropriate reevaluation or other corrective action is initiated if an action limit is reached. Action limits permit completion of corrective actions before the design limits are exceeded.

Cycle Count Action Limits and Corrective Actions

Cycle count action limits have been established based on the design number of cycles. In order to assure sufficient margin to accommodate occurrence of a low probability transient, corrective actions must be taken before the remaining number of allowable cycles for any specified transient, including the low-probability, higher-usage-factor events, becomes less than one. Events which occur more frequently contribute less per event to the usage factor. To account for both cases, corrective actions are required when the cycle count for any of the significant contributors to the usage factor is projected to reach a specified percentage of the design number of cycles before the end of the next fuel cycle.

If one of these cycle count action limits is reached, acceptable corrective actions must include the first, and may include others of the following:

1. Review of fatigue usage calculations.
   - To identify the components and analyses affected by the transient in question.
   - To determine whether the transient in question contributes significantly to CUF.
   - To ensure that the analytical bases of the leak-before-break (LBB) fatigue crack propagation analysis is maintained.
   - To ensure that the analytical bases of a fatigue crack growth and stability analysis in support of relief from ASME Section XI flaw removal and inspection requirements for hot leg small-bore half nozzle repairs are maintained.

2. Evaluation of remaining margins on CUF based on the CBF calculations of the DCPP Fatigue Management Program software.

3. Redefinition of the specified number of cycles (e.g., by reducing specified numbers of cycles for other transients and using the margin to increase the allowed number of cycles for the transient that is approaching its specified number of cycles).

4. Redefinition of the transient to remove conservatism in the pressure and temperature ranges.

Cumulative Fatigue Usage Action Limits and Corrective Actions

The enhanced program periodically calculates CUFs at the cycle-based fatigue management locations. CUF action limits have been established based on these calculated CUFs. To provide adequate time for corrective actions and adequate margin to permit continued operation, corrective actions are required when calculated CUF for any monitored location is projected to reach 1.0 within the next 3 fuel cycles.

For DCPP locations identified in NUREG/CR-6260, *Effects of the Reactor Coolant System Environment on Fatigue Life of Piping and Components (Generic Safety Issue 190)*, the action limit is based on accrued fatigue usage calculated with the F_{en} factors required for including effects of the reactor coolant environment.

If the action limit is reached, acceptable corrective actions must include the first, and may include others of the following:

1. Determine whether the scope of the Fatigue Management Program must be enlarged to include additional affected reactor coolant pressure boundary locations. This determination will ensure that other locations do not approach design limits without an appropriate action.

2. Enhance fatigue managing to confirm continued conformance to the code limit.

3. Repair the component.

4. Replace the component.

5. Perform a more rigorous analysis of the component to demonstrate that the design code limit will not be exceeded.

6. Modify DCPP operating practices to reduce the fatigue usage accumulation rate.

7. Perform a flaw tolerance evaluation and impose component-specific inspections, under ASME Section XI Appendices A or C (or their successors), and obtain required approvals by the NRC.

These corrective actions are applicable to the DCPP NUREG/CR-6260 locations described in Section 4.3.4, which includes consideration of the effects of the reactor coolant environment.

4.3.1.2 Present and Projected Status of Monitored Locations

Present and Projected Cycle Count

A review of the operating history of DCPP Units 1 and 2 was performed from initial startup to year-end 2008 in order to baseline the transient event count in the enhanced Fatigue Management Program. These baselined results were then projected to 60 years, as described below. Table 4.3-2 includes the accumulated cycle counts through 2008 and the projection to 60 years. The results illustrate that the NSSS design transients for a 50-year plant design life reasonably bound the expected number for a 60-year plant life for all transients except “Loss of Charging with Prompt Return to Service” for both Units and “Pressurizer Heatup / Cooldown in Excess of Plant Technical Specifications and within Bounds of WNEP-8828, Revision 1” for Unit 1.

The “Loss of Charging with Prompt Return to Service” event affects the RCS cold leg charging line nozzle NUREG/CR-6260 fatigue analysis completed for license renewal. As shown in Table 4.3-1, the RCS Cold Leg charging line nozzle is monitored for fatigue using the CBF methodology. As of year-end 2008, the CBF usage factors for this location are 0.01625 for Unit 1 and 0.01747 for Unit 2. These low CUF values demonstrate that there is ample margin and the continued use of CBF monitoring of this location will ensure that a Code CUF of 1.0 is maintained.

While the projection identifies a potential to exceed the analyzed number of “Pressurizer Heatup / Cooldown in Excess of Plant Technical Specifications and within Bounds of WNEP-8828” events for Unit 1, the current analysis is valid until that number is exceeded. The enhanced Fatigue Management Program will monitor this transient to ensure that corrective action is taken prior to exceeding the design number.

Baselining Method

To capture all the necessary transient events, data from several sources were considered, and combined into a consistent event count. The events from these sources were then compared on a 1-to-1 basis and discrepancies were reconciled. Documented event history was taken from existing manual or computer-assisted cycle counting records. A DCPP surveillance test procedure defines tracking requirements and records the plant cyclic transients. In 1996, FatiguePro software was installed at DCPP to monitor and record plant instrumentation in order to identify transients. This provided actual plant transient data from the installation date through 2008, except for the period from mid-2002 through year-end 2004. The gap in data from mid-2002 through year-end 2004 affected the baseline count for the charging and feedwater cycling transients as discussed below.

After considering the documented sources of cycle counting information, an explicit cycle count could not be determined for some transients. The absence of an event was confirmed for some transients by interviews with DCPP plant personnel and review of reportable events. For the remaining transients, conservative, transient-specific methods were used to estimate the number of cycles throughout the plant life to date.

The numbers of events to date for “Auxiliary Spray during Cooldown” and “RHR Operation (during Cooldown)” are based on an assumed number of events per RCS cooldown. Specifically, the “Auxiliary Spray during Cooldown” event generally occurs one or more times late in each RCS cooldown, when normal spray becomes unavailable (because the RCPs must be taken off-line at low RCS pressures). This event is assumed to occur twice for each counted “RCS Cooldown” event. The “RHR Operation (during Cooldown)” event happens when the RHR system is first brought on-line late in a cooldown (to continue cooling the RCS after the RCPs are stopped). This event is assumed to occur once per “RCS Cooldown” event.

The numbers of events for the charging system are based on the event frequency for which data is available. A safety factor is applied to account for the likely higher rate of events prior to 1996. This safety factor is also applied for the period from mid-2002 to year-end 2004. The safety factor is based on the number of reactor trips during these periods compared to the periods for which data is available [Reference 18].

The feedwater cycling events are assumed to correlate to pressurizer heatup cycles.[4] The numbers of events to date was determined by taking the ratio of the number of documented pressurizer heatups through 2008 to the number of expected pressurizer heatups for 60 years of operation and multiplying it by the total number of allowed feedwater cycling events (2,500). For DCPP Unit 1, there were 49 pressurizer heatups through 2008 and 179 total pressurizer heatups projected for 60 years. For DCPP Unit 2, there were 33 pressurizer heatups through 2008 and 179 total pressurizer heatups projected for 60 years.

Projection Method

Projected cycle counts were calculated using a dual linear projection of the historical results, except as noted in Table 4.3-2. For each event, two rates were determined; a long-term rate based on the entire history (i.e., the number of cycles since plant startup), and a short term rate (i.e., the incremental cycles over the last 10 years / 10 years). These two rates were combined using a weighted average:

Projection rate = [(LTW)*(long-term rate) + (STW)*(short-term rate)] / [(LTW) + (STW)].

The values of LTW (long-term weight) and STW (short-term weight) were determined on an event- or component-specific basis to reflect the most likely future behavior of that event or component. For most transients, the projection weighted the last 10 years more heavily based on the assumption that recent (short-term) history defines a trend which will likely continue into the future. For events that occurred infrequently, the projection increased the long-term weight since the recent history may have reflected isolated incidences rather than real trends.

These projections are intended to be a best estimate of the actual cycles expected. They do not represent a revision of the design basis for the DCPP Units. The purpose is to demonstrate that the 50-year design numbers of transients are reasonable for 60 years. Future cycle count projections will be based on the actual accumulation history over the analysis period, adjusted on a component-specific basis by scaling factors to account for expected future operating conditions.

[4] Feedwater cycles were assumed to correlate to pressurizer heatup cycles, instead of plant heatup cycles, to be conservative. Specifically, there were more instances of pressurizer heatups than plant heatups.

Table 4.3-2 DCPP Units 1 and 2 Transient Cycle Count and 60-year Projections[a, b]

Transient Description	Design Basis Cycles, FSAR Table 5.2-4	Limiting Analyzed Value[c]	Unit 1		Unit 2	
			Events (1984-2008)	Projected Events for 60-Years	Events (1985-2008)	Projected Events for 60-Years
Normal Conditions						
1. Plant Heatup (RCS) at ≤ 100°F/hr	250	200	43	85	31	65
2. Plant (RCS) Cooldown at ≤ 100°F/hr	250	200	42	87	30	63
3. Pressurizer Heatup at ≤ 100°F/hr	250	179	49	103	33	73
4. Pressurizer Cooldown at ≤ 200°F/hr	250	179	49	105	32	72
5. Pressurizer Heatup or Cooldown Cycle in Excess of Tech. Specs. and Within the Bounds of WNEP-8828, Rev. 1	NS	10	6	15[d]	1	3[d]
6. Unit Loading at 5% of Full Power/min	18,300	3,294	See Note e			
7. Unit Unloading at 5% of Full Power/min	18,300	3,294	See Note e			
8. Step Load Increase of 10% of Full Power	2,500	65	25	52	25	48
9. Step Load Decrease of 10% of Full Power	2,500	7	2	4	5	13
10. Large Step Load Decrease (with steam dump)	250	12	5	11	4	9
11. Steady State Fluctuations	Infinite	Infinite	See Note e			
12. Feedwater Cycle/Hot Shutdown	18,300	2,500	685	1,713	461	1,203[d]
13. RHR Initiation during Cooldown (Train A / B)[f]	NS	250	42 / 42	85 / 85	29 / 29	59 / 59

Table 4.3-2 DCPP Units 1 and 2 Transient Cycle Count and 60-year Projections[a, b]

Transient Description	Design Basis Cycles, FSAR Table 5.2-4	Limiting Analyzed Value[c]	Unit 1		Unit 2	
			Events (1984-2008)	Projected Events for 60-Years	Events (1985-2008)	Projected Events for 60-Years
14. Refueling[f]	NS	80	14	35	14	36
15. Charging and Letdown Flow Shutoff and Return to Service (Loop 4 / 3)[f]	NS	75	3 / 0	7 / 8[g]	4 / 0	11 / 8[g]
16. Loss of Charging with Prompt Return to Service (Loop 4 / 3)[f]	NS	25	64 / 0	126 / 3[g]	54 / 0	118 / 3[g]
17. Loss of Charging with Delayed Return to Service (Loop 4 / 3)[f]	NS	25	3 / 0	6 / 3[g]	3 / 0	6 / 3[g]
18. Loss of Letdown with Prompt Return to Service (Loop 4 / 3)[f]	NS	250	60 / 0	124 / 25[g]	45 / 0	94 / 25[g]
19. Loss of Letdown with Delayed Return to Service (Loop 4 / 3)[f]	NS	25	8 / 0	13 / 3[g]	10 / 0	22 / 3[g]
Upset Conditions						
20. Loss of Load (above 15% Full Power), Turbine Trip without Reactor Trip	100	19	5	18	3	10
21. Loss of All Offsite Power	50	3	1	2	1	3
22. Partial Loss of Flow (1 RCP)	100	3	1	3	3	8
23. Reactor Trip from Full Power	500	88	58	100	48	83
24. Inadvertent RCS De-Pressurization (Resulting in Reactor Trip)	NS	20	0	5[h]	0	5[h]

Table 4.3-2 DCPP Units 1 and 2 Transient Cycle Count and 60-year Projections[a, b]

Transient Description	Design Basis Cycles, FSAR Table 5.2-4	Limiting Analyzed Value[c]	Unit 1		Unit 2	
			Events (1984-2008)	Projected Events for 60-Years	Events (1985-2008)	Projected Events for 60-Years
25. Inadvertent Auxiliary Spray (differential temperature > 320°F)	12	7	2	5	5	7
26. Control Rod Drop[f]	NS	80	0	5	1	2
27. Inadvertent ECCS Actuation[f]	NS	60	0	5	0	5
28. Excessive Feedwater Flow[f]	NS	30	0	1	0	1
29. Safety Injection into RCS Cold Leg / High Head Safety Injection	NS	97	1	4[i]	0	4[i]
30. Inadvertent Accumulator Blowdown[f]	NS	5	0	1	0	1
31. Design Earthquake (OBE)	20	20	0	1	0	1
Test Conditions						
32. Turbine Roll Test	10	10	5	8[j]	6	9[j]
33. Primary Side Hydrostatic Test	10	5	1	2[j]	1	2[j]
34. Secondary Side Hydrostatic Test (each generator)	10	10	0	1	0	1
35. Primary Side Leak Test	60	5	0	5	0	5
36. Secondary Side Leak Test	10	10	0	1	0	1
37. Tube Leak Tests	800	800	0	See Note k	0	See Note k

[a] NS means “not stated,” “not specifically stated,” or “not applicable to this component.”

---

[b] For those events with no accumulated cycles, the projected numbers of cycles are based on the design assumptions for that event. Unless otherwise noted, the events with less than 40 design cycles are projected to 1 cycle in a 60-year life. Events with up to 200 cycles are projected to 5 lifetime cycles. Events with greater than 200 design cycles are projected to (0.02 × design) lifetime cycles.

[c] The limiting analyzed value is the lowest number of transients that are considered in DCPP fatigue analyses. The enhanced Fatigue Management Program compares actual cycles to this limiting analyzed value so that all plant analyses remain valid.

[d] Yearly cycle accumulation rate was determined by dividing the cycle accumulation at year-end 2008 by the number of years in operation (2008-1984=24 years for Unit 1 and 2008-1985=23 years for Unit 2). The accumulation rate was then multiplied by 60 to obtain a linear 60-year projection. Projections are rounded up to the next whole number (e.g. 11.13=12, or 12.65=13).

[e] There is no need to project this transient, because the number of actual transients could not credibly approach the analyzed number of cycles during the period of extended operation. Therefore, a 60-year projection is not provided. Also this is an insignificant stress event.

[f] Transient not included in the current Fatigue Management Program procedures.

[g] Because DCPP does not typically use the alternate charging, 10% × (design cycles) is used as the projection for Loop 3.

[h] This event is considered more likely than other events with greater than 40 design cycles, so the projection was increased.

[i] The design assumption is very high for this event; the projected number of Unit 1 High Head Safety Injection events is considered applicable to all safety injection events.

[j] These tests were performed during initial plant startup (pre-initial criticality) and are unlikely to be repeated. They are projected at 50% above current count.

[k] This test has insignificant effect on fatigue of primary side components. The transient was incorporated into the DCPP design basis with the replacement steam generators, whose design is valid for the period of extended operation, therefore a projection is not required.

4.3.2 ASME Section III Class A Fatigue Analysis of Vessels, Piping, and Components

Fatigue analyses are performed for ASME Section III Division 1 Class A vessels. The following subsections list all vessels, pumps, and components subject to Class A analyses.

- Reactor Pressure Vessel, Nozzles, and Studs 4.3.2.1
- Reactor Vessel Closure Head and Associated Components 4.3.2.2
- Reactor Vessel Internals (not Class A) 4.3.3
- Reactor Coolant Pumps 4.3.2.3
- Pressurizer 4.3.2.4
- Steam Generators (Primary or Tube Side and Shell Side)[(5)] 4.3.2.5

---

[5] The shell (steam) side of the DCPP replacement steam generators is Class 2 but also received a Class 1 analysis. See Section 4.3.2.5.

4.3.2.1 Reactor Pressure Vessel, Nozzles, and Studs

Summary Description

The DCPP Unit 1 reactor pressure vessel (RPV) is designed to ASME Code, Section III, 1965 Edition through the Winter 1966 Addenda. The DCPP Unit 2 reactor pressure vessel is designed to ASME Section III 1968 Edition.

Analysis

Pressure-retaining and support components of the reactor pressure vessel are subject to an *ASME Boiler and Pressure Vessel Code* Section III fatigue analysis. This original fatigue analysis has been updated to incorporate redefinitions of loads and design basis events, operating changes, replacement steam generators, and minor modifications using the 50-year design basis number of transients. The currently-applicable fatigue analyses of these components are TLAAs.

In order to determine if the currently-applicable fatigue analyses will remain valid for 60 years, the current design CUFs were multiplied by 1.2 (60/50) to determine if any fatigue usage values would exceed 1.0. The projection assumed the full number of the design transients during the first 50 years of operation and that the transients continue to occur at that rate during the period of extended operation. As shown in Table 4.3-3, the core support pads would have fatigue usage factors over 1.0 when projected to 60 years.

Table 4.3-3 Fatigue Usage Factors in the DCPP Reactor Pressure Vessels

Component	Units 1 and 2 50-Year Design CUF	60-Year Projections[a]
Vessel Flange	0.0586	0.0703
Closure Studs	0.7537	0.9044
Inlet Nozzle	0.135	0.162
Inlet Nozzle Support Pad	0.142	0.1704
Outlet Nozzle	0.311	0.3732

Table 4.3-3 Fatigue Usage Factors in the DCPP Reactor Pressure Vessels

Component	Units 1 and 2 50-Year Design CUF	60-Year Projections[a]
Outlet Nozzle Support Pad	0.235	0.282
Vessel-Wall Transition	0.0239	0.0287
Core Support Pads	0.891	1.0692
Bottom Head to Shell Junction	0.0102	0.0122
Bottom Instrumentation Penetrations	0.378	0.4536

[a] 60-year Projection = 50-year Design CUF x 1.2

Disposition: Validation, 10 CFR 54.21(c)(1)(i) and Aging Management, 10 CFR 54.21(c)(1)(iii)

Validation

As shown in Table 4.3-3, the usage factors for all RPV components, with the exception of the RPV studs and core support pads, calculated in this analysis remain significantly below 1.0 (i.e., do not exceed 0.6, when projected to 60 years). All RPV components, with the exception of the RPV studs and core support pads, will be valid for the period of extended operation, in accordance with 10 CFR 54.21(c)(1)(i).

Aging Management

The DCPP Metal Fatigue of Reactor Coolant Pressure Boundary program, described in Sections 4.3.1 and B3.1, will ensure that the fatigue analyses for the RPV studs and core support pads remain valid, or that appropriate reevaluation or other corrective measures maintain the design and licensing basis. Action limits will permit completion of corrective actions before the design basis number of events is exceeded, and before the cumulative usage factor exceeds the code limit of 1.0. Therefore, effects of fatigue in the reactor pressure vessel pressure boundary and its

supports will be managed for the period of extended operation, in accordance with 10 CFR 54.21(c)(1)(iii).

4.3.2.2 Reactor Vessel Closure Heads and Associated Components

Summary Description

The reactor pressure boundary components associated with the reactor vessel closure head are the CRDM pressure housings, core exit thermocouple nozzle assemblies (CETNAs), thermocouple nozzles, and thermocouple columns. The CRDM pressure housings, the CETNAs, and the thermocouple nozzles were replaced with the replacement reactor vessel closure head (RRVCH) in 2009 for Unit 2 and will be replaced with the RRVCH in 2010 for Unit 1. Table 4.3-4 lists the applicable design codes for the original (Unit 1) and replacement (Unit 2) reactor vessel closure heads and associated components.

Analysis

The replacement reactor vessel closure heads, CRDM pressure housings, CETNAs, and thermocouple nozzles will be qualified for 50 years, which will extend the design lives of the RRVCHs, CRDM pressure housings, CETNAs, and thermocouple nozzles beyond the period of extended operation.

The only reactor pressure boundary components associated with the reactor vessel closure head that will not be replaced are the thermocouple columns. These components were originally designed to a 40-year life. The fatigue analysis for the thermocouple column resulted in a maximum design CUF of 0.29. The design CUF was multiplied by 1.5 (60/40) to determine if the CUF would exceed 1.0. The projection assumed the full number of the design transients during the first 40 years of operation and that the transients continue to occur at that rate during the period of extended operation. The resulting CUF for 60 years of operation is 0.435, and therefore the TLAA remains valid for the period of extended operation.

Disposition: Validation, 10 CFR 54.21(c)(1)(i)

Validation - RRVCH

The Unit 1 and 2 replacement reactor vessel heads including the RRVCHs, CRDMs, CETNAs, and thermocouple nozzles will be analyzed for a 50-year design life, which will extend beyond the period of extended operation. Therefore the fatigue analyses

for the RRVCHs, CRDMs, CETNAs, and thermocouple nozzles will remain valid for the period of extended operation, in accordance with 10 CFR 54.21(c)(1)(i).

Validation - Thermocouple Column with Low Design Basis Usage Factors

The current fatigue analyses of the thermocouple column demonstrate that the maximum 40-year usage factor is 0.29. If multiplied by 1.5 (60/40) to account for the 60-year period of extended operation, these results do not exceed 0.6, providing a large margin to the code acceptance criterion of 1.0. The analyses of these components are therefore valid for the period of extended operation, in accordance with 10 CFR 54.21(c)(1)(i).

Table 4.3-4 Design Codes for the Original and Replacement Reactor Vessel Closure Heads and Associated Components

Component	Code	Edition/Addendum
Reactor Vessel Closure Head (Unit 1 original)	ASME Code, Section III, Class A	1968 Edition (no Addenda)
Control Rod Drive Mechanisms Pressure Housings (Unit 1 original)	ASME Code, Section III, Class A	1968 Edition (no Addenda)
Core Exit Thermocouple Nozzle Assemblies (Unit 1 original)	ASME Code, Section III	1983 Edition through the Summer 1984 Addenda
Thermocouple Nozzle (Unit 1 original)	ASME Code, Section III	1983 Edition through the Summer 1984 Addenda
Reactor Vessel Closure Head (Unit 2 replacement)	ASME Code, Section III, Class 1	2001 Edition through the 2002 and 2003 Addenda
Control Rod Drive Mechanisms Pressure Housings (Unit 2 replacement)	ASME Code, Section III, Class 1	2001 Edition through the 2002 and 2003 Addenda
Core Exit Thermocouple Nozzle Assemblies (Unit 2 replacement)	ASME Code, Section III, Class 1	1989 Edition (no Addenda)[(a)]
Thermocouple Nozzle (Unit 2 replacement)	ASME Code, Section III, Class 1	2001 Edition through the 2002 and 2003 Addenda
Thermocouple Columns (Units 1 and 2)	ASME Code, Section III	1983 Edition through the Summer 1984 Addenda

[a] Reconciled with the 2001 Edition through the 2002 and 2003 Addenda.

4.3.2.3 Reactor Coolant Pump Pressure Boundary Components

Summary Description

There are four Model 93A Reactor Coolant Pumps (RCPs) for each reactor (one pump per coolant loop). The RCP design reports demonstrate that the pressure components satisfy all the Class A requirements of the ASME Code, Section III, 1968 Edition through the Winter 1970 Addenda.

The Unit 1 RCPs were not ASME Code stamped, but the identical Model 93A RCPs were used in Unit 2 and are Code stamped. Therefore, the Unit 1 and 2 RCPs are treated identically. The design and function of the reactor coolant pumps are described in FSAR Section 5.5.1.

Analysis

The components of the RCP that form the reactor coolant pressure boundary are subject to a fatigue analysis. The internal RCP components are not reactor coolant system pressure boundary components and are not considered in the generic stress analyses performed for the Westinghouse Model 93A RCPs.

Most of the RCP components demonstrated Code compliance by satisfying the six criteria for a fatigue waiver of N-415.1. The exceptions are discussed below.

Locating Slot and Main Flange Bolts

The RCP casing at the locating slot was analyzed for fatigue with a CUF of 0.78. The main flange bolts were analyzed for fatigue with a CUF of 0.833. The fatigue results qualify the components to the 50-year design basis number of transients. The design CUFs were multiplied by 1.2 (60/50) to determine if the CUF would exceed 1.0. The projection assumed the full number of the design transients during the first 50 years of operation and that the transients continue to occur at that rate during the period of extended operation. The resulting CUFs for 60 years of operation are 0.936 for the locating slot and 0.9996 for the main flange bolts. To ensure that the transients used in the analysis will not be exceeded, they will be monitored by the enhanced DCPP Fatigue Management Program for the period of extended operation.

Hydraulic Nuts and Studs

During Unit 1 Refueling Outage 13 in 2005, the bolting components on RCP 1-2 were replaced with hydraulic nuts and studs. The current fatigue analyses of record result in a CUF of 0.912 for the main flange hydraulic nuts and a maximum CUF of 0.973 for the studs. The results are based on a 50-year design life which will extend beyond the period of extended operation. Therefore, the fatigue analyses for the hydraulic nuts and studs will remain valid for the period of extended operation.

There are no hydraulic nuts and studs in the remainder of the Unit 1 or Unit 2 RCPs.

Thermal Barrier Flange and Main Flange Thermowell

The thermal barrier flange and the main flange thermowell were analyzed for fatigue and it was established that fatigue was negligible. The thermal barrier flange had a CUF of 0.0002 based on the design transients equivalent to a 40-year design life. The design CUF was multiplied by 1.5 (60/40) to determine if the CUF would exceed 1.0. The projection assumed the full number of the design transients during the first 40 years of operation and that the transients continue to occur at that rate during the period of extended operation. The resulting CUF for 60 years of operation is 0.0003. Therefore, the fatigue analysis of the thermal barrier flange will remain valid for the period of extended operation.

The main flange thermowell was qualified for greater than 10^6 cycles. This indicates an alternating stress intensity that is less than the endurance limit. Increasing the 40-year design life used in the generic stress reports by a factor of 1.5 (60/40) to account for a 60-year design life would not change this determination. Therefore, qualification of the main flange thermowell will remain valid for the period of extended operation.

Water Connections and Pressure Taps

The water connections and the pressure taps in the thermal barrier are not affected by the transients associated with the RCS. Because these components do not experience the thermal transients, a fatigue analysis was not required per an N-415.1 fatigue waiver.

Seal Housing Penetrations and Bolts

The seal housing penetrations and bolts are not analyzed for fatigue. Per Section N-450, since the seal housing satisfies N-415.1, no fatigue analysis is required for the seal housing penetrations. Per N-416.2, since the seal housing satisfies a

fatigue waiver, the design of bolts installed on the seal housing does not need to consider fatigue.

The transients used in the fatigue waiver evaluations are consistent with those of FSAR Table 5.2-4; except for (1) "Unit Loading and Unloading" and (2) "Inadvertent Auxiliary Spray." The "Unit Loading and Unloading" transient is not counted by the Fatigue Management Program since the current operating strategy for the DCPP Units is continuous baseload power generation, and therefore, the actual number of cycles experienced is expected to be a small fraction of the cycles assumed in the fatigue waiver evaluation. The "Inadvertent Auxiliary Spray" transient uses 10 cycles in the fatigue waiver versus 12 cycles in FSAR Table 5.2-4. The enhanced Fatigue Management Program incorporated the lower, more conservative number of inadvertent auxiliary spray transients to determine an action limit.

Disposition: Validation, 10 CFR 54.21(c)(1)(i) and Aging Management, 10 CFR 54.21(c)(1)(iii)

Validation - Hydraulic Nuts and Studs

The Unit 1 RCP 1-2 hydraulic nuts and studs were installed in 2005 with a 50-year design life, which will extend beyond the period of extended operation. Therefore, the fatigue analyses for the hydraulic nuts and studs will remain valid for the period of extended operation, in accordance with 10 CFR 54.21(c)(1)(i).

Validation - Thermal Barrier Flange and Main Flange Thermowell

The design basis fatigue usage in the thermal barrier flange is a negligible 0.0002. The thermal barrier flange design CUF was multiplied by 1.5 (60/40) resulting in a CUF of 0.0003 for 60 years of operation.

The design basis analysis qualified the main flange thermowell for greater than 10^6 cycles, indicating an alternating stress intensity that is less than the endurance limit. The increase in design life from 40 years to 60 years does not affect this basis for the safety determination.

Therefore, the fatigue analyses of the thermal barrier flange and main flange thermowell will remain valid for the period of extended operation, in accordance with 10 CFR 54.21(c)(1)(i).

Aging Management

The DCPP Metal Fatigue of Reactor Coolant Pressure Boundary program, described in Sections 4.3.1 and B3.1, will ensure that either the assumed numbers of design

cycles or transient events used by the design documents for the locating slot, main flange bolts, and seal housing penetrations and bolts are not exceeded, or that appropriate re-evaluation or other corrective action is taken if a design basis number of events is approached. Action limits will permit completion of corrective actions before the design basis number of events is exceeded, and before the cumulative usage factor exceeds the code limit of 1.0. Effects of fatigue in the reactor coolant pump pressure boundaries will be managed for the period of extended operation, in accordance with 10 CFR 54.21(c)(1)(iii).

Table 4.3-5 DCPP RCP Fatigue Usage Factors

Component	**Units 1 & 2**	
	CUF	**60-Year Projection**
Casing	Fatigue Waiver	NA
Primary Suction / Discharge Nozzles	Fatigue Waiver	NA
Casing at Locating Slot	0.78	0.936[a]
Casing / Support Foot	Fatigue Waiver	NA
Casing Weir Plate	Fatigue Waiver	NA
Main Flange	Fatigue Waiver	NA
Main Flange Thermowell	$>10^6$	NA
Thermal Barrier Flange	0.0002	0.0003[b]
Lower Seal Housing	Fatigue Waiver	NA
Upper Seal Housing	Fatigue Waiver	NA
Main Flange Bolts	0.833	0.9996[a]
Main Flange Studs	0.973	See Note c
Main Flange Hydraulic Nuts	0.912	See Note c

[a] 60-year Projection = 50-year Design CUF x 1.2
[b] 60-year Projection = 40-year Design CUF x 1.5
[c] Component was replaced and the current design validates the design for the period of extended operation.

4.3.2.4 Pressurizer and Pressurizer Nozzles

Summary Description

The DCPP Westinghouse Series 84 pressurizers are welded vertical cylindrical carbon steel pressure vessels with hemispherical heads, welded interior stainless steel cladding, and a cylindrical support skirt and flange attached to the lower head. The Unit 1 pressurizer has cast upper and lower heads, with integrally-cast surge and spray nozzles. The Unit 2 heads are fabricated with welded-in nozzles.

The pressurizers and their integral support skirts are PG&E Design Class I and Quality Class I, AEC Safety Guide 1.26 (later NRC Reg Guide 1.26) Quality Group A, designed to ASME Section III, 1965 Edition, with Addenda thru Summer of 1966, as ASME Section III Class A components [FSAR Table 5.2-1 and §3.2]. The pressurizer heater pressure boundary safety classifications and design codes are similar.

Analysis

Pressure-retaining and support components of the pressurizer are subject to an ASME Section III fatigue analysis. The currently-applicable fatigue analyses of the pressurizers and their closures, nozzles, heaters, and integral support skirts are TLAAs. Discussion of the insurge-outsurge analysis, 60-year projection, and component-specific evaluation are presented below.

Effects of Insurge-Outsurge Transients

Investigation of insurge-outsurge transients by the industry and NRC found that, unless significantly mitigated, these transients can significantly increase lifetime fatigue usage factors in pressurizer subcomponents, and must therefore be evaluated and accounted for in the design stress and fatigue analyses. In order to determine the effect that the insurge-outsurge transients have on the design life of the pressurizer subcomponents, DCPP analyzed their fatigue usage [References 20 and 21].

The results of these analyses are included in Table 4.3-6. All of the locations that were analyzed to incorporate the effects of insurge-outsurge transients demonstrated a CUF of less than 1.0 for 50 years of operation, except for the Unit 1 heater penetration. In order to meet the Code requirement, the fatigue analysis for the Unit 1 heater penetration was performed using the 60-year projected number of transients. As discussed in Section 4.3, operating experience at DCPP demonstrated that the number of transients assumed for a 50-year life were conservative. Using the 60-year projected number of transients (less than the conservative 50-year number of transients), the results for the Unit 1 pressurizer lower head heater penetrations demonstrated that the fatigue usage factor for 60 years is less than 1.0.

Since the insurge-outsurge analysis relied on the use of the 60-year projected number of transients to demonstrate a CUF value of less than 1.0, the number of transients will be monitored by the enhanced DCPP Fatigue Management Program.

Pressurizer Subcomponent 60-Year Projections

In order to determine if the currently-applicable fatigue analyses will remain valid for 60 years, the current design CUFs (Table 4.3-6) were multiplied by 1.2 (60/50) to determine if any fatigue usage values would exceed 1.0. The projection assumed the full number of the design transients during the first 50 years of operation and that the transients continue to occur at that rate during the period of extended operation. As shown in Table 4.3-6, the Unit 1 pressurizer spray nozzles would have fatigue usage factors over 1.0 when projected to 60 years. The Unit 1 pressurizer spray nozzle will be monitored by the enhanced DCPP Fatigue Management Program to ensure that the CUF will not exceed a 1.0 during the period of extended operation.

Evaluation of Permitted Relief Valve Operating Cycles for design of the Unit 2 Relief Valve Support Bracket-to-Plate Fillet Weld

Unit 1 has no such support bracket.

The analysis of the Unit 2 relief valve support bracket fillet weld evaluated partial usage factors (1) due to loads required by the design specification, plus (2) those imposed by relief valve operation. The partial usage factor due to loads required by the design specification is much less than 0.1. Maintaining the usage factor below 1.0 is controlled by the permitted number of valve operating cycles. However, the limit is above 9,000 operations, far in excess of any expected in any foreseeable design life. For an operating period of 60 years, it would require approximately 150 valve operations per year to reach 9,000. Based on DCPP operating history, the Unit 2 pressurizer relief valves are operated less than 10 times per year.

Disposition: Validation, 10 CFR 54.21(c)(1)(i); Revision, 10 CFR 54.21(c)(1)(ii); and Aging Management, 10 CFR 54.21(c)(1)(iii)

Validation - Unit 2 Relief Valve Support Bracket, Including Permitted Relief Valve Operating Cycles

The analysis of the Unit 2 relief valve support bracket determined the partial usage factor due to loads required by the design specification is much less than 0.1. Maintaining the usage factor below 1.0 is controlled by the permitted number of valve operating cycles. However, the limit is above 9,000 operations, far in excess of any expected in any foreseeable design life. The fatigue analysis of the Unit 2 relief valve support bracket is therefore valid for the period of extended operation, in accordance with 10 CFR 54.21(c)(1)(i).

Validation - Pressurizer Subcomponents with Projected 60-Year Usage Factors Less Than 0.6

As shown in Table 4.3-6, the projected 60-year fatigue usage factors of some subcomponents remain significantly below 1.0 (i.e. do not exceed 0.6, when projected to 60 years). The analyses of these subcomponents are therefore valid for the period of extended operation, in accordance with 10 CFR 54.21(c)(1)(i).

Revision - Analyses for the Lower Heads and Surge Nozzles

Revision of analyses for the lower heads and surge nozzles was required in order to evaluate effects of insurge-outsurge transients. The low usage factors of the reanalyses demonstrate that the 60-year lifetime usage factors are less than 1.0 in these subcomponents. Thus, the reanalysis validates these subcomponents for the period of extended operation, in accordance with 10 CFR 54.21(c)(1)(ii).

Aging Management - Pressurizer Subcomponents with Projected 60-Year Usage Factors Greater Than 0.6

As shown in Table 4.3-6, the projected 60-year fatigue usage factor of the Unit 1 spray nozzle exceeds 1.0. In addition, the Unit 2 spray nozzle, Unit 1 heater penetration, and Unit 2 fabricated upper head and shell have projected 60-year fatigue usage factors greater than 0.6. The DCPP Metal Fatigue of Reactor Coolant Pressure Boundary program, described in Sections 4.3.1 and B3.1, will ensure that the fatigue usage factors based on those transient events remain within the code limit of 1.0 for the period of extended operation, or that appropriate corrective measures maintain the design and licensing basis by other acceptable means. Action limits will permit completion of corrective actions before the design basis

number of events is exceeded, and before the cumulative usage factor exceeds the code limit of 1.0. The effects of fatigue in these pressurizer subcomponents will be managed for the period of extended operation, in accordance with 10 CFR 54.21(c)(1)(iii).

Table 4.3-6 Summary of DCPP Pressurizer ASME Section III Class A Analyses and Fatigue Usage Factors

Component Analysis	**Limiting Location CUF**			
	Unit 1		**Unit 2**	
	50-Year Value	**60-Year Projection[a]**	**50-Year Value**	**60-Year Projection [a]**
Surge Nozzle Analysis	0.2288	0.2746	0.2201	0.2641
Spray Nozzle Analysis	0.9469	1.13628	0.784	0.9408
Safety and Relief Nozzle Analysis	0.0062	0.00744	0.069	0.0828
Lower Head Welds[b]	Head to Shell 0.2304	Head to Shell 0.2765	Head to Shell 0.088 Head to Surge Nozzle 0.2276	Head to Shell 0.1056 Head to Surge Nozzle 0.2731
Heater Penetration	2.9643	0.9391[c]	0.5443	0.6532
Upper Head and Shell Analysis[b]	0.2869	0.34428	0.7498	0.8997
Support Skirt and Flange Analysis	0.0045	0.0054	0.0045	0.0054
Support Lug Analysis	0.269 (lug), 0.188 (shell)	0.3228 (lug), 0.2256 (shell)	0.269 (lug), 0.188 (shell)	0.3228 (lug), 0.2256 (shell)
Manway Analysis	0.00	-	S_a < endurance limit[d]	-

Table 4.3-6 Summary of DCPP Pressurizer ASME Section III Class A Analyses and Fatigue Usage Factors

Component Analysis	Limiting Location CUF			
	Unit 1		Unit 2	
	50-Year Value	60-Year Projection[(a)]	50-Year Value	60-Year Projection [(a)]
Upper Instrument Nozzle Analysis	0.121	0.1452	0.121	0.1452
Lower Instrument Nozzle Analysis	0.0424	0.05088	0.08672	0.0037
Immersion Heater Analysis	0.005	0.006	0.005	0.0060
Valve Support Bracket Analysis[(e)]	NA	NA	0.0418	0.0502

[a] 60-year Projection = 50-year Design CUF x 1.2
[b] The Unit 1 pressurizer upper and lower heads are cast. The Unit 2 pressurizer upper and lower heads are fabricated.
[c] This value is the result of a fatigue analysis performed using the 60-year projected number of transients instead of the design basis numbers of transients.
[d] An alternating stress (S_a) less than the endurance limit indicates that there is no fatigue life associated with this components.
[e] Unit 1 has no such support bracket.

4.3.2.5 Steam Generator ASME Section III Class 1, Class 2 Secondary Side, and Feedwater Nozzle Fatigue Analyses and Fatigue Qualification Tests

Summary Description

Replacement steam generators (RSGs) are installed at DCPP. Unit 2 RSGs were installed in the spring 2008 refueling outage. Unit 1 RSGs were installed in the spring 2009 refueling outage. The design life of the RSGs is a minimum of 50 years, ending in 2058 and 2059, respectively. The period of extended operation will expire in 2044 and 2045, prior to the end of the design life of the RSGs.

The RSGs are designed and fabricated to the requirements of ASME Code Section III, 1998 Edition, with Addenda through 2000. The design specification classifies the primary side of each RSG as ASME Code Class 1, and the secondary side of each RSG as ASME Code Class 2. However, the entire pressure boundary of the component is designed and constructed in accordance with ASME Code Section III, Class 1 requirements.

Analysis

The applicable fatigue analyses and fatigue qualification tests of the RSGs are TLAAs. Fatigue usage factors in the steam generator components depend on effects of transient events specified in the design specification. The Unit 1 and 2 RSG analyses and qualification tests use a 50-year design basis numbers of transients, and are therefore valid beyond the period of extended operation.

Steam Generator Tube Code Fatigue Analysis (Not a TLAA)

The design of the RSGs includes a Code fatigue analysis of the steam generator tubes. This analysis is not a TLAA because the code fatigue analysis is not used to support the safety determination, in accordance with 10 CFR 54.3(a) Criterion 4.

The RSGs are inspected in accordance with DCPP TS 3.4.17, 5.5.9, and 5.6.10. Tube degradation will be detected during scheduled inservice steam generator (SG) tube examinations to ensure that SG tube integrity is maintained. The SG Program includes provisions for condition monitoring assessments, performance criteria for SG tube integrity, SG tube repair criteria, and SG tube inspections.

Fatigue Tests

The analyses of the RSGs showed that the usage factors of five steam generator components, the primary manway drain hole, primary manway studs, 6 inch handhole studs, and the 2.5 inch inspection port gasket seal bolts and diaphragm seal bolts, exceed 1.0, as indicated in Table 4.3-7. These components were therefore qualified by fatigue tests in accordance with ASME Section III, for the number of cycles required by the design specification for a 50 year life.

Table 4.3-7 DCPP Units 1 and 2 Steam Generator Cumulative Fatigue Usage

Component	Unit 1 & 2 Cumulative Usage Factor
Tubesheet, Channel Head, Stub Barrel Complex	0.547
Primary Nozzles	0.00424
Primary Manway Cover	0.05665
Primary Manway Pad	0.00385
Primary Manway Shell	0.00071
Primary Manway, Studs	10.23[(a)]
Primary Manway, Drain Hole	3.36277[(a)]
Primary Manway, Tap Hole	0.62746
Divider Plate	0.172
Tube to Tubesheet Weld	0.895
Tube Welds	0.89
Lower Shell, Transition Cone, Upper Shell	0.010
6-Inch Handhole, Cover	0.0873
6-Inch Handhole, Knuckle	0.0797
6-Inch Handhole, Shell	0.0087
6-Inch Handhole, Studs	2.9004[(a)]

Table 4.3-7 DCPP Units 1 and 2 Steam Generator Cumulative Fatigue Usage

Component	Unit 1 & 2 Cumulative Usage Factor
2.5-Inch Inspection Port, Gasket Seal, Cover	0.1115
2.5-Inch Inspection Port, Gasket Seal, Pad	0.1892
2.5-Inch Inspection Port, Gasket Seal, Shell	0.0057
2.5-Inch Inspection Port, Gasket Seal Bolts	1.3499[(a)]
2.5-Inch Inspection Port, Welded Diaphragm, Cover	0.1088
2.5-Inch Inspection Port, Welded Diaphragm, Pad	0.1879
2.5-Inch Inspection Port, Welded Diaphragm, Shell	0.0057
2.5-Inch Inspection Port, Welded Diaphragm Bolts	1.5155[(a)]
4-Inch Inspection Port, Gasket Seal, Cover	0.0969
4-Inch Inspection Port, Gasket Seal, Pad	0.009
4-Inch Inspection Port, Gasket Seal, Shell	0.081
4-Inch Inspection Port, Gasket Seal Bolts	0.2427
4-Inch Inspection Port, Welded Diaphragm, Cover	0.0945
4-Inch Inspection Port, Welded Diaphragm, Pad	0.008
4-Inch Inspection Port, Welded Diaphragm, Shell	0.079
4-Inch Inspection Port, Welded Diaphragm Bolts	0.2488
0.75-Inch Level Tap	0.74749
1-Inch Shell Tap	0.73363
2-Inch Blowdown Tap	0.06230
Feedwater Nozzle and Thermal Sleeve	0.756
Steam Nozzle & Head Complex	0.04820
Secondary Manway, Cover	0.097

Table 4.3-7 DCPP Units 1 and 2 Steam Generator Cumulative Fatigue Usage

Component	Unit 1 & 2 Cumulative Usage Factor
Secondary Manway, Pad	0.143
Secondary Manway, Shell	0.058
Secondary Manway, Studs	0.560
Lower Internals, Lug-to-Shell Weld	0.18
Steam Outlet Nozzle, Flow Limiting Insert Weld Region	0.10944
Feedring, Feedring Supports, Spray Nozzle	0.040
Upper Lateral Support Lug, Bolting	0.651

[a] Calculated fatigue usage exceeds the limit of 1.0, therefore the component is qualified by fatigue tests.

Disposition: Validation, 10 CFR 54.21(c)(1)(i)

RSG ASME Section III, Class 1 Fatigue Analyses and Fatigue Testing

The Unit 1 and 2 RSG Class 1 fatigue analyses used the design basis numbers of events assumed for a 50-year design life.

The RSGs primary manway drain hole, primary manway studs, 6-inch handhole studs, and 2.5-inch inspection port gasket seal bolts and welded diaphragm bolts are qualified by test for a fatigue life which envelops the 50-year design basis number of events required by the design specification.

The period from installation of the RSGs to the end of the 50-year design life extends beyond the period of extended operation. Therefore, the design of the RSGs, by analysis and testing, is valid through the period of extended operation in accordance with 10 CFR 54.21(c)(1)(i).

4.3.2.6 Absence of a TLAA for Reactor Coolant System Boundary Valves

Summary Description

The ASME Section III Class A classification generally applies to fluid systems and components that meet the ANSI N18.2 Safety Class I classification. The design and construction of DCPP fluid systems and components were established prior to the issuance of the Draft ASME Code for Pumps and Valves, and ASME Code, Section III, 1971 Edition, which initially defined the Class A designation. All DCPP fluid systems and components are in accordance with the accepted industry codes and standards that were in effect during its design and construction.

FSAR Table 3.2-2 defines the classifications of valves that meet the description of Safety Class 1 components per ANSI N18.2. These components are PG&E Design Class I and Quality Class I. An inspection of the DCPP Q-List identified the valves within the reactor coolant system pressure boundary that are PG&E Design Class I and Quality Class I. FSAR Table 5.2-9 lists the RCS pressure boundary valves.

FSAR Table 5.2-2 lists RCS boundary valves as being designed in accordance with USAS (ANSI) B16.5, MSS-SP-66, and various ASME Section III editions. The USAS B16.5, MSS-SP-66, and ASME Code, Section III Article 9 cited by the FSAR do not require fatigue analyses or invoke other time-dependent analyses.

The only DCPP valves that might require a fatigue analysis, and whose design would thus be supported by TLAAs, would be designed to ASME Section III Class A with inlets greater than 4 inches nominal. At DCPP, no RCS pressure boundary valves are designed to an edition of ASME Section III that requires a fatigue analysis and have an inlet greater than 4 inches.

The licensing basis for valves does not indicate any other time-dependent design methods or criteria. Therefore no TLAAs support the design of DCPP valves, in accordance with 10 CFR 54.3(a) Criterion 2.

4.3.2.7 Reactor Coolant Pressure Boundary Piping

Summary Description

ANSI N18.2 Safety Class 1 components are typically designed to ASME Section III Class 1 (Class A), which requires a fatigue analysis. The design and construction of DCPP Design Class I fluid systems and components were established prior to the existence of these documents. All DCPP Design Class I fluid systems and components are in accordance with the accepted industry codes and standards that were in effect during its design and construction.

FSAR Table 3.2-2 defines the characteristics of components that meet the definition of Safety Class 1 components per ANSI N18.2. These are Design Class I and Quality Class I components.

Compliance with Code Requirements

DCPP Design Class I and Quality Class I piping was designed, purchased, and installed to either ASA B31.1-1955 or ANSI B31.1-1967 with ANSI B31.7-1969. B31.1-1955 and B31.1-1967 designs do not require fatigue analyses, but B31.7-1969 could require a fatigue analysis. DCPP piping purchased to B31.1-1967 and B31.7-1969 are only subject to B31.7-1969 rules for fabrication, erection, and inspection. The design of the piping was to B31.1-1967. Therefore, DCPP Design Class I and Quality Class I piping, which is equivalent to ANSI Safety Class 1, does not require an ASME Section III Class A fatigue analysis.

However, the ANSI B31.1 piping analyses are TLAAs since the analyses apply a stress range reduction factor (SRRF) to the allowable stress range for secondary stresses (expansion and displacement) to account for thermal cycling. The TLAAs associated with the design of ANSI B31.1 piping is addressed in Section 4.3.5.

4.3.2.8 Absence of Supplemental Fatigue Analysis TLAAs in Response to Bulletin 88-08 for Intermittent Thermal Cycles due to Thermal-Cycle-Driven Interface Valve Leaks and Similar Cyclic Phenomena

Summary Description

The mechanism described in NRC Bulletin 88-08, *Thermal Stresses in Piping Connected to the Reactor Coolant Systems,* was thermal cycles in normally-isolated, dead-end branches, due to leaking interface valves. Cyclic valve leakage is caused when the interface valve constricts and opens slightly when cooled by the ambient temperature. The leak then admits hot water from the primary loop, which then re-expands the valve materials and re-closes the leak, resulting in a thermal-cycle-driven interface valve leak, and previously unanalyzed cyclic thermal stresses on the valves and piping.

Analysis

NRC Bulletin 88-08 requested that licensees: (1) review their RCS to identify any connected, normally-isolated piping that could be subjected to temperature distributions that would result in unacceptable thermal stresses; (2) take action, where such piping is identified, to ensure that the piping will not be subjected to unacceptable thermal stresses; and (3) implement a program to provide continued assurance that normally-isolated sections of all piping connected to the RCS will not be subjected to combined cyclic and static thermal and other stresses that could cause fatigue failure during the remaining life of the unit.

Absence of a TLAA

In response to NRC Bulletin 88-08, DCPP performed a complete analysis of systems connected to the Unit 1 and 2 RCS. The review concluded that the potential for the described thermal conditions existed only on the four boron injection tank (BIT) cold leg safety injection lines of each unit. To provide continued assurance that un-isolable sections of BIT injection piping connected to the RCS would not be subjected to combined cyclic and static thermal and other stresses that could cause fatigue failure, an isolation valve and pressure indicator were installed in the bypass line of each unit. In accordance with plant procedures, pressure checks verify that the pressure is less than the RCS pressure.

The NRC found DCPP to be in compliance with the requirements of NRC Bulletin 88-08 and approved this evaluation in their letter of April 11, 1991 [Reference 36].

The investigations demonstrated that the BIT cold leg safety injection lines are susceptible to the Bulletin 88-08 phenomena. In 1990, the BITs were removed from the system in both Units. Although the BITs are no longer in service, the concerns still apply because the lines and valves still exist and are connected to the charging header. The pressure indicators on these lines are monitored to provide continuing assurance that the piping will not be subjected to thermal cyclic stresses due to this phenomenon. No time dependent analyses have been performed, therefore no TLAA exists for the Bulletin 88-08 phenomena, under 10 CFR 54.3(a), Criterion 3.

4.3.2.9 Bulletin 88-11 Revised Fatigue Analysis of the Pressurizer Surge Line for Thermal Cycling and Stratification

Summary Description

> The purpose of this bulletin is to (1) request that addressees establish and implement a program to confirm pressurizer surge line integrity in view of the occurrence of thermal stratification and (2) require addressees to inform the staff of the actions taken to resolve this issue.
>
> [NRC Bulletin 88-11]

Analysis

The pressurizer surge line piping is designed and fabricated to ASA Standard B31.1 and installed in accordance with ASME Code, Section III, 1971. In response to NRC Bulletin 88-11, Westinghouse performed a plant-specific evaluation of DCPP pressurizer surge lines in WCAP-12416 [Reference 4]. The evaluation determined the maximum fatigue usage at the reactor coolant loop (RCL) hot leg nozzle safe-end was 0.97. The fatigue analysis of the surge lines in response to this bulletin is a TLAA.

The NRC found DCPP to be in compliance with the requirements of NRC Bulletin 88-11 and approved this evaluation in their letter of July 30, 1992, “Closeout of Staff Activities on NRC Bulletin 88-11” [Reference 22].

Disposition: Aging Management, 10 CFR 54.21(c)(1)(iii)

The DCPP Metal Fatigue of Reactor Coolant Pressure Boundary program, described in Sections 4.3.1 and B3.1, will ensure that the calculated usage factor of the hot leg surge nozzle safe-end is not exceeded during the period of extended operation. Action limits will permit completion of corrective actions before the cumulative usage factor exceeds the code limit of 1.0. Fatigue in the pressurizer surge line due to thermal stratification will be managed for the period of extended operation in accordance with 10 CFR 54.21(c)(1)(iii).

4.3.2.10 Absence of TLAA for Thermal Embrittlement of Cast Austenitic Stainless Steel Reactor Coolant Pumps

Summary Description

The DCPP reactor coolant pumps (RCPs) are Westinghouse Model 93A. The casings are fabricated from SA351 CF8 cast stainless steel, which has a 304 stainless steel chemistry, and low ferrite that has minimal susceptibility to thermal aging degradation. Reactor coolant pump casings were fabricated by electroslag welding as described in FSAR Section 5.5.1.4.1. The casings therefore require weld inspections per ASME Section XI, Table IWB-2500-1.

ASME Code Case N-481, *Alternate Examination Requirements for Cast Austenitic Pump Casings*, allows the replacement of volumetric examination of primary loop pump casings with a fracture mechanics based integrity evaluation (Item d of Code Case N-481) supplemented by specific visual inspections.

The Westinghouse Owners Group subsequently sponsored an integrity analysis, WCAP-13045, as specified in Code Case N-481. The analysis applies to all Westinghouse-designed primary loop pump models in service. On a generic basis, this report satisfies the requirements of the accepted fracture mechanics method and serves as a typical reference report for plant-specific applications. However, a plant-specific evaluation to demonstrate safety and serviceability is required by Code Case N-481.

Westinghouse prepared WCAP-13895 [Reference 5] to demonstrate that the loads of WCAP-13045 bound those of the DCPP RCP casing and that the results are applicable to the DCPP. However, WCAP-13895 determined the faulted screening loads in WCAP-13045 were not bounding for DCPP. In order to demonstrate the

acceptability of Code Case N-481 for DCPP, WCAP-13895 re-performed portions of WCAP-13045 that are applicable to DCPP.

Analysis

WCAP-13045 and WCAP-13895: Fracture Mechanics Analyses

WCAP-13045 and WCAP-13895 contain fracture mechanics analyses to determine the postulated crack stability. The analyses acceptance criteria are based on the crack initiation energy integral.

The cast austenitic stainless steel used in the RCP casing is subject to time-dependent thermal aging during service. Thermal aging causes an elevation in the yield strength of the material, a decrease in fracture toughness, and a decrease in the crack initiation energy integral.

The effects of thermal aging in stainless steels depend logarithmically on time (i.e. after a prolonged exposure to high temperatures, the thermal aging effects achieve a saturation level, after which further exposure to high temperatures do not affect the material properties). Since the analyses reported in WCAP-13045 and WCAP-13895 relied on fully aged reference material, i.e. with the fracture toughness properties at the saturation levels, the analyses do not have a material property time-dependency that would require further evaluation for license renewal, and the fracture mechanics analyses are not TLAAs, in accordance with 10 CFR 54.3(a), Criterion 3.

WCAP-13045: Fatigue Crack Growth Analysis

Westinghouse did not address the applicability of the WCAP-13045 fatigue crack growth analysis in the DCPP plant-specific analysis, WCAP-13895, because Code Case N-481 does not require a fatigue crack growth analysis. On the basis that a fatigue crack growth analysis is not included in the Code Case N-481 implementing reference WCAP-13895, it is concluded that there is no TLAA, in accordance with 10 CFR 54.3(a), Criteria 4 and 5.

4.3.2.11 Absence of a Cumulative Fatigue Usage Factor TLAA to Determine High Energy Line Break Locations

Summary Description

Branch Technical Position (BTP) MEB 3-1 provides guidance for determining the types and locations of postulated high-energy line breaks (HELB) outside containment; and has historically been used for the same purpose inside containment. If a plant has a licensing basis commitment to use the BTP MEB 3-1 guidance for ASME Section III Class 1 piping whose design included a fatigue analysis, then it would be required to postulate breaks at intermediate locations where the design basis usage factor equals or exceeds 0.1.

Although DCPP piping was not designed to ASME Class 1 rules, a Westinghouse generic design, which was utilized for the piping design at DCPP, originally determined the locations and types of postulated breaks in the reactor coolant loop and connected piping (Westinghouse-scope piping). The BTP MEB 3-1 fatigue criterion was used.

The remainder of the piping (DCPP-scope piping) was originally designed to ANSI B31.1 with B31.7 fabrication, erection, and inspection rules, but without use of the ASME Section III Class 1 or ANSI B31.7 fatigue analyses necessary to determine break locations on the basis of fatigue. See Section 4.3.2.7. The DCPP-scope piping design therefore did not use the BTP MEB 3-1 fatigue criterion.

Analysis

Westinghouse Piping (Reactor Coolant Loop and Connected Piping)

Since the Westinghouse generic design used the BTP MEB 3-1 fatigue criterion, the analysis of these generic break locations and types was a TLAA. However the later application of a leak-before-break (LBB) analysis eliminated dynamic effects (jet and pipe whip loads) of the reactor coolant loop (RCL) breaks from the design and licensing basis. The supporting LBB fatigue crack growth analysis is a TLAA for DCPP, but this does not affect the determination of HELB break locations, types, or the current analysis of their effects. See Section 4.3.2.12. The original specific fatigue-and-time-dependent break locations and types are therefore no longer pertinent to the licensing and design basis safety determination; and the analysis that determines them is therefore no longer a TLAA, by 10 CFR 54.3(a), Criterion 4.

DCPP - Scope Piping

The DCPP design did not use the BTP MEB 3-1 fatigue criterion. Examination of the detailed design and licensing basis finds that no equivalent time-dependent criteria were used. Break locations were determined by BTP MEB 3-1 stress criteria and by other criteria independent of time, and are therefore not supported by TLAAs, in accordance with 10 CFR 54.3(a), Criteria 2 and 3.

4.3.2.12 TLAAs in Fatigue Crack Growth Assessments and Fracture Mechanics Stability Analyses for Leak-Before-Break Elimination of Dynamic Effects of Primary Loop Piping Failures

Summary Description

The leak-before-break (LBB) analysis eliminated the need to consider large breaks in the primary loop piping, which allowed removal of evaluations of their jet and pipe whip effects. This allowed removal of large jet barriers and whip restraints.

The DCPP LBB analysis was performed by Westinghouse and is presented in WCAP-13039 [Reference 6]. WCAP-13039 was reviewed and accepted by the NRC for use at DCPP with a safety evaluation issued in 1993.

The LBB analysis was performed for DCPP to evaluate postulated flaw growth in the primary loop piping of the RCS. This analysis considered the thermal aging of the cast austenitic stainless steel (CASS) piping for fracture mechanics and plant transients for fatigue crack growth over the operating life of the plant.

Analysis

WCAP-13039: Fracture Mechanics Analysis

The fracture mechanics analysis in WCAP-13039 was performed to determine crack stability. The analysis is influenced by the crack initiation energy integral for CF8M cast austenitic stainless steel. Cast austenitic stainless steel, used in the DCPP RCS, is subject to time-dependent thermal aging during service.

The effects of thermal aging in stainless steels depend logarithmically on time (i.e. after a prolonged exposure to high temperatures, the thermal aging effects achieve a saturation level, after which further exposure to high temperatures do not affect the material properties of stainless steel). Since the analyses reported in WCAP-13039 relied on fully aged reference material, i.e. with the properties at the saturation levels, the analyses do not have a material property time-dependency that would require further evaluation for license renewal and the fracture mechanics analyses

are not TLAAs in accordance with 10 CFR 54.3(a), Criterion 3 [Reference 6, Table 7-1].

WCAP-13039: Fatigue Crack Growth Analysis

The fatigue crack growth analysis in WCAP-13039 was performed to determine the sensitivity of the RCS to small cracks. The analysis is influenced by the number of design basis transients assumed during the life of the plant. WCAP-13039 concludes that "The effects of low and high cycle fatigue on the integrity of the primary piping are negligible" [Reference 6, § 10.0-c].

The evaluation of LBB fatigue effects was for a typical Westinghouse plant, which is representative of the DCPP RCS design. Table 8-1 of WCAP-13039 summarizes the number of transients assumed, based on operation of the plant for 40 years. FSAR Table 5.2-4 contains similar information for a design life of 50 years. Therefore, the numbers in FSAR Table 5.2-4 are typically 25 percent higher to account for the additional 10 years of operation.

The enhanced DCPP Fatigue Management Program will provide assurance that either the assumed number of design cycles is not exceeded during the period of extended operation, or that appropriate re-evaluation or other corrective action is taken if a design basis number of events is approached.

Disposition: Aging Management, 10CFR54.21(c)(1)(iii)

WCAP-13039: Fatigue Crack Growth Analysis

The LBB analysis determined that fatigue crack growth effects will be negligible. The basis for evaluation of fatigue crack growth effects in the LBB analysis will remain unchanged so long as the design basis number of transients remains unchanged. Section 4.3.1.2 demonstrates that the specified set of design basis transient events used by WCAP-13039 should not be exceeded during the period of extended operation, and therefore the basis for fatigue effects in the LBB analysis should remain valid for the period of extended operation.

The design basis number of transients used in the LBB analysis will be managed for the period of extended operation by the DCPP Metal Fatigue of Reactor Coolant Pressure Boundary program, which is summarized in Sections 4.3.1 and B3.1. Action limits will permit completion of corrective actions before the design basis number of events is exceeded. These effects will be managed for the period of extended operation, in accordance with 10 CFR 54.21(c)(1)(iii).

4.3.3 Fatigue Analyses of the Reactor Pressure Vessel Internals

Summary Description

The structural adequacy of the reactor internals is discussed in FSAR Section 3.9.3.4.1. The reactor internal components are not ASME code components. The reactor internals were designed and built prior to the implementation of Subsection NG of the ASME Boiler and Pressure Vessel Code, Section III, for reactor vessel internals. Therefore, no plant-specific ASME Code stress report was written during the initial design. However, these components were originally designed to meet the intent of the 1971 Edition of Section III of the ASME Boiler and Pressure Vessel Code with addenda through the Winter 1971. The structural integrity of the reactor internals design has been ensured by analyses performed on both generic and DCPP-specific bases.

Analysis

The qualification of the reactor vessel internals was first performed by Westinghouse on a generic basis for 40 years of operation. Some DCPP internal components were subsequently analyzed on a DCPP-specific basis.

T_{avg} Operating Range Reactor Vessel Internals Analysis

In support of the modification to the T_{avg} operating range, all of the core support structures, except for the upper core plate, lower core plate, and baffle bolts, were qualified based on analyzing the most limiting internal components [Reference 23]. From the four-loop generic stress report, for the applicable components, the most highly stressed due to cyclic thermal loads are:

1. Lower support plate
2. Lower support columns
3. Core barrel nozzles

These components therefore have the highest fatigue usage factors and were used to demonstrate compliance of the DCPP reactor internals with the intent of ASME Code, Section III, Subsection NG. The remaining internal components within the scope of the DCPP-specific analysis are bounded by the results of the limiting components and have sufficient margin in the stress and fatigue usage factors to accommodate any expected increases in stress range or number of cycles.

The enhanced DCPP Fatigue Management Program will monitor the 50-year design basis number of transients used in the T_{avg} operating range analysis to ensure it will remain valid for the period of extended operation.

Upper Core Plates

The Unit 2 upper core plate (UCP) was analyzed to support the 2005 Unit 2 upflow conversion modification [Reference 24]. The numbers of transients used in the analysis are bound by the numbers of transients in the current 50-year design basis.

The results of the four-loop generic stress report qualify the Unit 1 UCP for 40 years of operation. However, the results of the DCPP-specific analysis performed for the Unit 2 UCP can be applied to the Unit 1 component, since these components are of similar design [Reference 19].

The enhanced DCPP Fatigue Management Program will monitor the 50-year design basis number of transients used in the Unit 2 upflow conversion modification for the Unit 1 and 2 UCPs to ensure it will remain valid for the period of extended operation.

Lower Core Plates

The Unit 1 lower core plate (LCP) was analyzed for the increase in heat generation seen by the lower core plate due to power uprate [Reference 25]. The numbers of transients used in the analysis are bound by the numbers of transients in the current 50-year design basis.

The results of the four-loop generic stress report qualify the Unit 2 LCP for 40 years of operation. However, the results of the DCPP-specific analysis performed for the Unit 1 LCP can be applied to the Unit 2 component, since these components are of similar design [Reference 19].

The enhanced DCPP Fatigue Management Program will monitor the 50-year design basis number of transients used in the Unit 1 power uprate for the Unit 1 and 2 LCPs to ensure it will remain valid for the period of extended operation.

Baffle-Former Bolts

The fatigue usage factor of the baffle-former bolts was originally shown to be less than 1.0 based on evaluation of test data which demonstrated acceptable performance for a set of bolt displacements. However the adequacy of baffle bolts is an industry issue and the design analyses and evaluations are not sufficient to support the safety determination. Therefore, the design of the baffle bolts is not supported by a TLAA, in accordance with 10 CFR 54.3(a), Criterion 4. Their

extended operation is addressed by participation in industry level initiatives as described below.

Flow Induced Vibration in the Reactor Vessel Internals

FSAR Section 3.9.1 and the original SER for DCPP discuss the design and vibration test programs for the reactor vessel internals performed as part of preoperational and startup testing. The dynamic behavior of reactor internals has been studied using experimental data obtained from prototype plants along with results of model tests and static and dynamic tests. Indian Point Nuclear Generating Unit 2 was the prototype for the DCPP Unit 1 internals verification program. Trojan Nuclear Plant data provide additional internals verification for Unit 2 (Unit 1 lower internals are similar to Indian Point Unit 2; Unit 2 lower internals are similar to Trojan). The tests indicated that no unexpected large vibration amplitudes existed in the internal structure during operation.

The licensing basis does not describe any time limited effects for a licensed operating period associated with flow-induced vibration. Therefore there are no TLAAs, in accordance with 10 CFR 54.3(a) Criteria 2 and 3.

Participation in Industry Programs for Reactor Vessel Internals

PG&E will (1) participate in industry programs for investigating and managing the aging effects on the reactor vessel internals; (2) evaluate and implement the results of the industry programs as applicable to the reactor internals; and (3) upon completion of these programs, but not less than 24 months prior to entering the period of extended operation, PG&E will submit an inspection plan to the NRC for review and approval.

Disposition: Aging Management, 10 CFR 54.21(c)(1)(iii)

The design basis number of transients will be managed for the period of extended operation by the DCPP Metal Fatigue of Reactor Coolant Pressure Boundary program, which is summarized in Sections 4.3.1 and B3.1. Action limits will permit completion of corrective actions before the design basis number of events is exceeded. The continued implementation provides reasonable assurance that fatigue in the reactor vessel internals will be managed for the period of extended operation in accordance with 10 CFR 54.21 (c)(1)(iii).

4.3.4 Effects of the Reactor Coolant System Environment on Fatigue Life of Piping and Components (Generic Safety Issue 190)

Summary Description

DCPP addressed GSI-190 review requirements by assessing the environmental effect on fatigue at the NUREG/CR-6260 sample locations for older vintage Westinghouse plants.

NUREG/CR-6260 identifies seven sample locations for older vintage Westinghouse plants:

1. Reactor vessel shell and lower head
2. Reactor vessel inlet nozzles
3. Reactor vessel outlet nozzles
4. Pressurizer surge line (hot leg nozzle safe end)
5. Charging system nozzle
6. Safety injection system nozzle
7. Residual heat removal (RHR) system piping

A summary of environmental effects on fatigue at the NUREG/CR-6260 locations is provided in Table 4.3-8.

Analysis

The effect of the reactor coolant environment on DCPP fatigue usage has been evaluated for the seven sample components identified in NUREG/CR-6260 using material-specific guidance presented in NUREG/CR-6583 for carbon and low alloy steels and in from NUREG/CR-5704 for stainless steels. One analysis was completed for each NUREG/CR-6260 location to bound both Units [References 26-33].

Location 1 is the inside surface of the lower head near the shell-to-head transition, where the support guides are welded to the interior of the shell. Location 2 is at a thickness discontinuity where the nozzle is welded to the RPV. Location 3 is at a thickness discontinuity where the smaller nozzle end welded to the reactor coolant piping joins the larger nozzle end and that is welded to the RPV. Location 4 is in

the hot leg nozzle safe-end. Location 5 is the region just above the charging nozzle thermal sleeve. Location 6 is the accumulator-to-cold leg nozzle body, where the nozzle is connected to the main coolant piping. Location 7 is the RHR tee, at the junction of the safety injection lines from the accumulator discharge and the RHR pumps.

DCPP Units 1 and 2 reactor vessels were built to ASME Section III (Class A Vessels) design code rules. As such, design fatigue calculations are available for the RPV locations (locations 1-3). Westinghouse performed an updated RPV structural analysis based on revised T_{avg} values [Reference 34]. The fatigue usage results for the RPV locations were used in the environmentally-assisted fatigue EAF analysis. Since the piping was designed to the rules of the B31.1 piping code, no complete fatigue analysis had been conducted for the charging nozzle piping, the safety injection piping, or the residual heat removal piping. For the RHR–accumulator tee, an ASME NB-3600 fatigue analysis was performed in order to evaluate the (EAF) CUF. For the other piping locations, ASME NB-3200 fatigue analyses were performed in order to evaluate the EAF CUFs.

The enhanced DCPP Fatigue Management Program includes all of the NUREG/CR-6260 sample locations. The design transients will be counted to ensure the CUFs used in Table 4.3-8 remain valid. In addition, FatiguePro will calculate the usage factors from actual plant transient data in five of the seven locations based on the cycle-based fatigue (CBF) methodology.[6] Since the reactor vessel inlet and outlet nozzles will be monitored through cycle counting, the program will not calculate CUFs for these two locations.

The environmental fatigue analyses are presented in Table 4.3-8. The locations in Table 4.3-8 with an EAF CUF below 1.0 when using the design basis CUF projected to 60 years and the maximum F_{en} require no further analysis. For the locations that had EAF CUF values greater than 1.0, further evaluation was performed, as described below. The final results are shown in Table 4.3-9.

Charging, Safety Injection, and Hot Leg Surge Line Nozzles

The three locations that have a 60-year EAF CUF greater than 1.0 are the charging nozzle, safety injection nozzle, and the hot leg surge nozzle. The 60-year EAF CUF

[6] DCPP made efforts to address the concerns of RIS 2008-30 by using the FatiguePro CBF monitoring methodology, which does not rely on the Green's Function.

analyses of the charging, safety injection, and hot leg surge nozzles were revised using a revised F_{en} calculation in accordance with NUREG/CR-6260, and 60-year cycle projections (from Table 4.3-2). The F_{en} values were revised for the safety injection and hot leg surge nozzles using the calculated strain rate of significant load set pairs using the integrated strain rate method described in MRP-47. The revised F_{en} calculations assume dissolved oxygen of less than 0.05 ppm. This is conservative since this value yields higher F_{en} values. Table 4.3-9 shows the results of revised analyses.

The revised 60-year EAF CUFs for the charging and safety injection nozzles are 0.435 and 0.7626 respectively, which are less than the Code limit of 1.0. To ensure that these components maintain EAF CUFs below 1.0, the EAF CUF will be monitored by the enhanced DCPP Fatigue Management Program using the CBF methods.

The revised hot leg surge nozzle 60-year EAF CUF is 3.2293, which is greater than the Code limit of 1.0. Therefore, DCPP will repair, replace, or augment the ISI program to require ASME Section XI volumetric examination at regular intervals prior to entering the period of extended operation.

Disposition: Validation, 10 CFR 54.21(c)(1)(i); and Aging Management, 10 CFR 54.21(c)(1)(iii)

Validation, 10 CFR 54.21(c)(1)(i)

As shown in Table 4.3-8, the evaluation of fatigue effects in three of the NUREG/CR-6260 locations, reactor vessel shell to lower head junction, reactor vessel inlet nozzles, and RHR line tee, has demonstrated that the EAF CUF values will remain sufficiently below 1.0, i.e. less than 0.5. If multiplied by 60/50 to account for the period of extended operation, these results do not exceed 0.6, providing a large margin to the code acceptance criterion of 1.0. The evaluation of fatigue effects in these locations has been validated and projected to the end of the period of extended operation, in accordance with 10 CFR 54.21(c)(1)(i).

Aging Management, 10 CFR 54.21(c)(1)(iii)

The enhanced DCPP Metal Fatigue of Reactor Coolant Pressure Boundary program, described in Sections 4.3.1 and B3.1, includes appropriate action limits to ensure that the usage factor at the remainder of these locations, including F_{en}, does not exceed 1.0 before an evaluation is completed and appropriate actions have been identified. Action limits will permit completion of corrective actions before the design basis number of events is exceeded, and before the cumulative usage factor

exceeds the code limit of 1.0. Therefore, the effects of the reactor coolant environment on fatigue usage factors in the remaining locations will be managed for the period of extended operation in accordance with 10 CFR 54.21(c)(1)(iii).

Table 4.3-8 Summary of Fatigue Usage Factors at NUREG/CR-6260 Sample Locations Adapted to DCPP Units 1 and 2

Location	Material	CUF	F_{en}	EAF CUF	60-Year EAF CUF[a]
RPV Bottom Head to Shell Junction	Low Alloy Steel	0.0102	2.455	0.025	0.030
RPV Inlet Nozzle	Low Alloy Steel	0.142	2.455	0.349	0.4188
RPV Outlet Nozzle	Low Alloy Steel	0.311	2.455	0.764	0.9168
Hot Leg Surge Nozzle (Safe End)	Stainless Steel	0.5387	10.0388	5.4075	6.489
Charging System Nozzle	Stainless Steel	0.0641	15.35	0.984	1.1808
Safety Injection Nozzle	Stainless Steel	2.6353[b]	15.35	40.45	48.54
Residual Heat Removal Line Tee	Stainless Steel	0.0093381	15.35	0.1433	0.1720

[a] The "60-year EAF CUF" is equal to "CUF" x "F_{en}" x (60 years / 50 years).
[b] Although the CUF for 50 years of operation is shown to be greater than 1.0, as of year-end 2008 the CUF for the Safety Injection Nozzle is actually 0.02561 for Unit 1 and 0.00430 for Unit 2. This is because the number of actual transients experienced is less than the number of transients utilized in the fatigue analysis.

Table 4.3-9 Revised EAF CUF Based on 60 year Projected Numbers of Transients

Location	60-Year CUF	Revised F_{en}	Revised 60-Year EAF CUF
Charging System Nozzle	0.02834	15.35	0.435
Safety Injection Nozzle	0.1507	5.06	0.7626
Hot Leg Surge Nozzle (Safe End)	0.3179	10.16	3.2293

4.3.5 Assumed Thermal Cycle Count for Allowable Secondary Stress Range Reduction Factor in ANSI B31.1 Piping

Summary Description

Piping in the scope of license renewal that is designed to ANSI B31.1 requires the application of a stress range reduction factor (SRRF) to the allowable stress range for secondary stresses (expansion and displacement) to account for thermal cycling. The allowable secondary stress range is 1.0 S_A for 7,000 equivalent full-range temperature cycles or less, and is reduced in steps to 0.5 S_A for greater than 100,000 cycles. Partial cycles are counted proportional to their temperature range.

If the number of full-range thermal cycles is expected to exceed 7,000, ANSI B31.1 requires the application of the stress range reduction factor to the allowable stress range S_A for expansion stresses (secondary stresses).

Analysis

These piping analyses are TLAAs because they are part of the current licensing basis, are used to support safety determinations, and depend on an assumed number of thermal cycles.

Piping Design

DCPP piping is designed to ANSI B31.1 1967 edition, including summer 1973 Addenda; and ANSI B31.7-1969 with 1970 Addenda, with the exception of the pressurizer surge line, reactor coolant loop, and some firewater piping. The pressurizer surge line and reactor coolant loop were designed to ANSI B31.1-1955 and were subsequently analyzed to address NRC Bulletin 88-11 (see Section 4.3.2.9) and leak-before-break (see Section 4.3.2.12), respectively. The

firewater piping designed in accordance with applicable NFPA Standards did not require a fatigue analysis.

Piping Evaluation

A review of the plant design basis documentation for DCPP B31.1 piping found that the number of expected lifetime full-range or equivalent full-range thermal cycles would not exceed 7,000 during the original 40-year plant life. Since the Class 2 and 3 requirements of ANSI B31.7 refers to B31.1 for design conditions and criteria, piping designed to the B31.7 Class 2 or 3 requirements were also included in the review.

Temperature screening criteria were used to identify components that might be subject to significant thermal fatigue effects for 60 years of operation, consistent with previous NRC-approved precedence. Normal and upset operating temperatures less than 220°F in carbon steel components, or 270°F in stainless steel, will not produce significant thermal stresses, and will not therefore produce significant fatigue effects. The use of the temperature screening criteria also require the consideration of significant geometric stress intensification factors or significant residual stresses.

DCPP conducted a systematic evaluation of plant piping systems in-scope for license renewal. The evaluation found that the majority of piping and components in the scope of license renewal:

- Do not exceed the operating temperature screening criteria, have no significant geometric stress intensification factors or significant residual stresses, and therefore do not experience significant thermal cycle stresses; or

- Clearly do not operate in a cycling mode that would expose the piping to more than three thermal cycles per week, i.e., to more than 7,000 cycles in 60 years; or

- For piping that could not be validated per the above process, it was determined that the assumed thermal cycle count for the analyses depends closely on reactor operating cycles. By using the thermal cycle counts from similar ASME Section III Class A component analyses (RCS transients, see Section 4.3.1.1), the thermal cycle count can be conservatively estimated.

Those RCS transients likely to produce full-range thermal cycles in balance-of-plant B31.1 piping, in a 50-year plant lifetime (FSAR Table 5.2-4), are the 250 heatup, 250 cooldown, and 500 reactor trips.

Other events may contribute a few full-range or part-range cycles. However the total count of all design basis events (FSAR Table 5.2-4) is conservatively estimated at 4,665.[7] This is a reliable indication of the number of thermal cycles for most in-scope balance-of-plant support systems, as well as the CVCS and ECCS piping more directly connected to the reactor coolant system. Therefore, the total count of expected full-range thermal cycles for most of these systems is under 4,665 for a 50-year plant life. For the 60-year operating period the number of thermal cycles for piping analyses is increased to approximately 5,598, which is less than of the 7,000-cycle threshold for which a stress range reduction factor is required in the applicable piping codes.

Reactor Coolant Hot Leg and Pressurizer Liquid Space Sample Lines

The evaluation of plant piping systems found that the reactor coolant hot leg and pressurizer liquid space lines meet the temperature screening criteria (normal operating temperature of 608°F and 650°F respectively) and may be subject to more than 7,000 thermal cycles. Review of operating practices determined that RCS samples are normally obtained from the CVCS at the letdown demineralizer inlet. The letdown demineralizer inlet line has a normal operating temperature of 127°F, and therefore does not meet the temperature screening criteria discussed above. This operating temperature indicates a very limited thermal stress range, and no significant fatigue effects would be produced. The temperature also precludes geometric stress intensification factors or residual stresses from contributing to significant fatigue effects. Reactor coolant samples are drawn from the reactor coolant hot leg sample lines only when CVCS is unavailable. The use of the hot leg sample lines is conservatively estimated at 20 times per year, which amounts to 1,200 times over the course of 60 years. Per DCPP procedures, the pressurizer liquid space is sampled once per week, which amounts to 3,120 times over the course of 60 years. These are far less than the 7,000-cycle threshold for which a stress range reduction factor is required in the applicable piping codes.

---

[7] This total count does not include unit loading and unloading since load following is not used at DCPP. Furthermore, 60-year cycle projections were used for the load step increases and decreases (65 cycles) and feedwater cycling (2,500 cycles).

Disposition: Validation, 10 CFR 54.21(c)(1)(i)

For less than 7,000 equivalent full-temperature thermal cycles, the stress range reduction factor is 1. Therefore, so long as the estimated number of thermal cycles remains less than 7,000 for a 60-year life, the stress range reduction factor remains at 1 and the stress range reduction factor used in the piping analysis will not be affected by the period of extended operation.

The expected number of equivalent full-range thermal cycles for DCPP ANSI B31.1 and B31.7 piping is less than 5,598 in 60 years (less than 1,200 for the reactor coolant hot leg sample lines and 3,120 times for the pressurizer liquid space sample lines), which is less than of the 7,000-cycle threshold for which a stress range reduction factor is required in the applicable piping codes. Therefore, the existing analyses of ANSI B31.1 and B31.7 piping for which the allowable range of secondary stresses depends on the number of assumed thermal cycles and that are within the scope of license renewal are valid for the period of extended operation, in accordance with 10 CFR 54.21(c)(1)(i).

4.3.6 Fatigue Design and Analysis of Class IE Electrical Raceway Support Angle Fittings for Seismic Events

Summary Description

As described in FSAR Section 3.10.2.12, the Class IE raceway systems (safety-related) consist of conduits, cable trays, pull boxes, and supports.

The raceway supports are required to withstand loads from the more severe of the double design earthquake (DDE) or Hosgri earthquake (HE). SSER 18 summarizes the criterion for unbraced ceiling mounted joints made of angle fittings for Unit 1 by stating that they were being checked against rotation and low-cycle fatigue from seismic events. The findings of SSER 18 were addressed for Unit 2 in SSER 29.

Analysis

In accordance with IEEE 344-1975 and the DCPP-specific licensing basis, five design earthquakes (DEs) and one DDE or Hosgri are assumed for the life of the plant. These seismic loadings are the only cyclical loads for which qualification of the unbraced joints depends on the number of cycles.

Disposition: Validation, 10 CFR 54.21(c)(1)(i)

There have been no occurrences of a DE, DDE, or Hosgri seismic event at DCPP during the first 20 plus years of operation. Therefore, the seismic fatigue qualification of Class IE electrical support angle fittings for the original design basis number of DE, DDE, and Hosgri events is sufficient to the end of the period of extended operation. Therefore, the analysis is valid for the period of extended operation, in accordance with 10 CFR 54.21(c)(1)(i).

4.4 ENVIRONMENTAL QUALIFICATION OF ELECTRIC EQUIPMENT

10 CFR 50.49, *Environmental Qualification of Electric Equipment Important to Safety for Nuclear Power Plants,* requires that certain electrical and instrument and control (I&C) equipment located in harsh environments be qualified to perform their safety-related functions in those harsh environments after the effects of in-service aging.

The EQ program includes qualification of components for the current licensed operating period, i.e. 40 years, which are TLAAs. The EQ program requires that individual EQ files establish the qualified life of each program component. For those components that are nearing the end of their qualified service life, the EQ Program has provisions for the components to be re-evaluated for longer service, refurbished, requalified, or replaced.

Program Description

The DCPP EQ program is consistent with the requirements of 10 CFR 50.49, and the guidance of NUREG-0588, Category II. DCPP certified its compliance with the regulation in letter DCL-85-072. DCPP's implementation of the DCPP EQ program has been reviewed and accepted by the NRC. This acceptance is documented in supplements to the Safety Evaluation Report (SSER), Nos. 15 and 31.

A master list of qualified equipment is identified in a controlled plant information database. The database is comprised of specific EQ data fields along with a controlled drawing. Dedicated EQ files have been established to document the environmental qualification of equipment based on the results of testing and analyses. The EQ files include qualification summaries, test reports, applicable correspondence, local environments, and information that associate the installed equipment with the qualification documents. The environments used for equipment environmental qualification are specified in controlled documents.

Exemptions

DCPP performed case-by-case evaluations which identified some devices that could be exempted from environmental qualification. The exemption criteria were reviewed by the NRC as part of the original license for each unit in SSER No. 15.

The list of exempt devices was developed by verifying whether specific equipment meets any of the following three criteria:

- The equipment does not perform essential safety functions in a harsh environment, and any failure of such equipment in a harsh environment will not impact safety-related functions or mislead an operator.
- The equipment performs its function before it is exposed to a harsh environment, the sufficiency of any time margin provided is adequately justified, and the subsequent failure of the equipment as a result of the exposure to the harsh environment does not degrade other safety functions or mislead the operator.
- The safety-related function of a particular piece of equipment can be accomplished by some other designated equipment that has been adequately qualified and satisfies the single failure criterion.

[FSAR Section 3.11.1.2]

These evaluations involved only the equipment function and environment and were not dependent on design life; therefore these evaluations are not TLAAs.

NUREG-0588 contains two "categories" of regulatory positions. Category II positions supplement IEEE 323-1971 which provides guidance for qualifying electrical equipment. Category I positions supplement IEEE 323-1974 which explicitly addresses the concept of aging and qualification testing.

As discussed in FSAR Section 3.11, although there are no DCPP regulatory commitments to do so, supplemental guidance of RG 1.89 Revision 1 is considered for qualification of new and replacement equipment installed since the promulgation of the Guide, where there are no “sound reasons” for not upgrading the qualification of such equipment.

The following are “sound reasons to the contrary,” as discussed in Regulatory Guide 1.89 for the use of replacement equipment qualified to Category II in lieu of upgrading equipment qualified to Category I:

a. The item of equipment to be replaced is a component of equipment that is routinely replaced as part of normal equipment maintenance.

b. The item to be replaced is a component that is part of an item of equipment qualified as an assembly.

c. Identical equipment to be used as a replacement was on hand as a part of the utility's stock prior to February 22, 1983.

d. Replacement equipment qualified in accordance with the provisions of 10 CFR 50.49 does not exist.

e. Replacement equipment qualified in accordance with the provisions of 10 CFR 50.49 is not available to meet installation and operation schedules. However, in such a case, the replacement equipment may be used only until upgraded equipment can be obtained and an outage of sufficient duration is available for replacement.

f. Replacement equipment qualified in accordance with 10 CFR 50.49 would require significant plant modifications to accommodate its use.

g. The use of replacement equipment qualified in accordance with 10 CFR 50.49 has a significant probability of creating human factor problems that would negatively affect plant safety and performance.

The use of these reasons involves only the equipment function and environment, and is not dependent on design life; therefore these evaluations are not TLAAs.

Analysis

The EQ program manages applicable component thermal, radiation, and cyclic aging effects through the aging evaluations based on 10 CFR 50.49 for the current operating license, using methods of demonstrating qualification for aging and accident conditions established by 10 CFR 50.49(f). Under 10 CFR 54.21(c)(1)(iii), plant EQ programs, which implement the requirements of 10 CFR 50.49 (as further defined by NUREG-0588 and Regulatory Guide 1.89, Rev. 1), are the aging management programs for license renewal. Reanalysis of an aging evaluation to extend the qualification of components under 10 CFR 50.49(f) is performed on a routine basis as part of the EQ program. Maintaining qualification through the period of extended operation requires that the existing EQ evaluations (EQ files) be re-evaluated. Components not already qualified to the end of the period of extended operation must be scheduled for replacement, refurbishment, or have their qualification extended. A reanalysis extends the qualification and reduces margins or excess conservatisms incorporated in the prior evaluation. Some components have been installed under a plant modification, and will not experience 60 years of radiation aging, thermal aging, or wear or cycling by the end of the period of extended operation. The important attributes of reanalysis include analytical methods, data collection and reduction methods, underlying assumptions, acceptance criteria, and corrective actions (if acceptance criteria are not met), as discussed below.

Analytical Methods: The analytical models used in the reanalysis of an aging evaluation are the same as those previously applied during the prior evaluation. The Arrhenius methodology is an acceptable model for thermal aging evaluation. For license renewal, 60-year normal radiation dose is established by extrapolating the 40-year normal dose (40-year dose multiplied by 1.5) plus the accident radiation dose. The 60-year cyclic aging may be established in a similar manner. Other models may be justified on a case-by-case basis.

Data Collection and Reduction Methods: Using more realistic service conditions (for example, temperature, radiation, and cycles) based on actual monitored conditions is the primary method used for a reanalysis. Actual monitored service conditions such as temperature are generally lower than the design service conditions used in the prior aging evaluation and therefore can support extended thermal life of the equipment.

Underlying Assumptions: EQ component aging evaluations contain sufficient conservatism to account for most environmental changes occurring due to plant modifications and events. When unexpected adverse conditions are identified during operational or maintenance activities that affect the normal operating environment of a qualified component, the affected EQ component is evaluated and appropriate corrective actions are taken, which may include changes to the qualification bases and conclusions.

If the qualification cannot be extended by reanalysis, the component is refurbished or replaced prior to exceeding the period for which the current qualification remains valid. A reanalysis is to be performed in a timely manner (that is, sufficient time is available to refurbish, replace, or re-qualify the component if reanalysis is unsuccessful).

Disposition: Aging Management, 10 CFR 54.21(c)(1)(iii)

The Environmental Qualification of Electrical Components program (B3.2) will be continued through the period of extended operation. Continuing the existing EQ program provides reasonable assurance that the aging effects will be managed and that the EQ components will continue to perform their intended functions for the period of extended operation. Aging effects addressed by the EQ program will be managed for the period of extended operation, in accordance with 10 CFR 54.21(c)(1)(iii).

4.5 CONCRETE CONTAINMENT TENDON PRESTRESS ANALYSIS

DCPP does not have prestressed containment tendons. This Section is not applicable.

4.6 CONTAINMENT CONCRETE, LINER, AND PENETRATIONS

4.6.1 Absence of a TLAA for Containment Concrete and Liner Plate

Summary Description

The containment structure design is described in Section 3.8.1 of the DCPP original Safety Evaluation Report, NUREG-0675, and FSAR Section 3.8.1, including a list of all codes, standards, and specifications applicable to the containment structure.

The DCPP containment vessel is conventionally reinforced concrete designed to American Concrete Institute (ACI) Standard 318-63, *Building Code Requirements for Reinforced Concrete*, as cited by FSAR Section 3.8.1.2.1(1).

The containment concrete is poured against a steel membrane liner. The liner ensures the vessel is leak tight, and its electrical, process, personnel access, and equipment hatch penetrations are part of the containment pressure boundary.

Concrete Containment with Steel Reinforcements

The DCPP reinforced concrete containment vessel is designed to ACI 318-63 which does not require a fatigue analysis; therefore the design of containment does not include a TLAA, by 10 CFR 54.3(a) Criteria 2 and 3.

Liner Plate

The DCPP liner plate was constructed in accordance with Part UW of ASME Section VIII, 1968 Edition with Addenda through Summer 1968 and provides a gas-tight barrier to prevent uncontrolled release of fission products from the reactor building during operation and also in the unlikely event of an accident [Reference 10].

Fatigue in containment liners, their anchors to the concrete pressure vessel, and their penetrations is described in Section 4.6 of the NUREG-1800 *Standard Review Plan for License Renewal*, in the Westinghouse Owners' Group WCAP-14756-A topical report for license renewal for containment [Reference 7], and in its NRC staff safety evaluation. The Standard Review Plan notes that in some designs "Fatigue of the liner plates or metal containments may be considered in the design based on an assumed number of loading cycles for the current operating term." However the DCPP containment liner was designed only to stress limit criteria, independent of the number of load cycles and with no fatigue analyses.

Neither the licensing bases nor the code editions and addenda invoked by them impose an analysis for cyclic loading to other than quasi-static stress criteria, therefore design of the containment liner plate is not supported by a TLAA, in accordance with 10 CFR 54.3(a) Criteria 2 and 3.

Liner Plate Attachments

The attachments to the containment liner plates, such as piping supports and other commodities, are designed to the AISC specification *Structural Steel for Buildings* [Reference 10]. The AISC specification states that most members do not need to be designed for fatigue because they experience only minor stress fluctuations. DCPP licensing basis documents and the DCPP containment liner plate attachment design calculations do not consider fatigue in the design of the liner structure. Therefore, design of the containment liner plate attachments is not supported by a TLAA, by 10 CFR 54.3(a), Criteria 2 and 3.

4.6.2 Design Cycles for Containment Penetrations

Summary Description

DCPP containment penetrations, air locks, and hatches all form part of the containment pressure boundary.

> Those parts of penetration insert plates, penetration sleeves, airlocks, and access hatches, which form part of the pressure boundary, conform to Class B requirements of Section III, ASME Boiler and Pressure Vessel Code, 1968 Edition, including Addenda through Summer 1968.
>
> [FSAR Section 3.8.1.2.1(8)]

Piping typically attaches to the penetration sleeves through flued heads. The flued heads were designed to the MC requirements of the ASME Section III, Subsection NE, 1971 Edition. The flued heads form part of the containment pressure boundary.

Analysis

Paragraph N-1314(e) of the Class B requirements states that “Any portion of the containment structure which does not satisfy the provisions of N-415.1 shall be evaluated by and satisfy the provisions of N-415.2 and N-416.”

The DCPP containment piping penetration calculations do not specifically identify the basis for not addressing piping penetration fatigue. To address the issue of fatigue in the containment penetrations during the period of extended operation, DCPP completed fatigue waivers satisfying the provisions of N-415.1 [Reference 35]. Below is an evaluation of the effect of the lack of fatigue analyses for the applicable components.

Airlocks and Equipment Hatches

The containment airlocks and equipment hatches are designed to the Class B requirements of Section III, ASME Boiler and Pressure Vessel Code, 1968 Edition, including Addenda through Summer 1968. These methods do not depend on the number of design cycles, or on the licensed design life. ASME Section III, Subparagraph N-415 provides rules for a fatigue analysis *if cyclic loads are specified*. A review of the DCPP design reports for the containment personnel air locks, emergency air lock, and equipment hatches did not identify a specified number of cyclic loads which need to be evaluated, and therefore the designs are not supported by TLAAs.

As a conservative measure, to address the issue of fatigue during the period of extended operation, DCPP evaluated the applicable ASME Section III, 1968 design code. It was determined that the requirements of a fatigue waiver per Subparagraph N-415.1, *Vessels Not Requiring Analysis for Cyclic Operation*, and Figure N-415(A) were met. The analysis was performed using the transients consistent with the current design basis. The number of transients will be monitored by the enhanced Fatigue Management Program.

Containment Penetration Sleeves and End Plates

The containment penetration sleeves and end plates are designed to the Class B requirements of Section III, ASME Boiler and Pressure Vessel Code, 1968 Edition, including Addenda through Summer 1968. The stress analyses qualify containment penetrations by evaluating the shear stresses and the mechanism that transmits loads to the containment concrete wall. These calculations do not specifically address fatigue.

To address the issue of fatigue in the containment penetration sleeves and end plates during the period of extended operation DCPP evaluated the containment penetration sleeves for metal fatigue on the basis of the applicable ASME Section III, 1968 design code. The requirements of a fatigue waiver per Subparagraph N-415.1, *Vessels Not Requiring Analysis for Cyclic Operation*, and Figure N-415(A) were met. The analysis was performed using the transients consistent with the current design

basis. The number of transients will be monitored by the enhanced Fatigue Management Program.

Flued Heads

The flued heads were evaluated using the MC requirements of Section III, ASME Boiler and Pressure Vessel Code, 1971 Edition. The evaluation verified that the alternating stress range as calculated using the maximum allowable stress intensity value ($3S_m$) is less than the stress range derived from Figure I-9.0 (S_a) for the design number of cycles ($3S_m/2 < S_a$). If the computed stress intensity is less than that allowed maximum, the flued head automatically satisfies the fatigue requirements, e.g. that the CUF would be less than 1.0. Although DCPP expects to experience fewer cycles during 60 years of operation than was originally used in the design of the flued heads, the number of transients will be monitored by the enhanced Fatigue Management Program.

The design specification required a unique number of design cycles for the steam generator blowdown line flued heads, i.e., 14,000 additional thermal cycles, which were evaluated with a fatigue analysis. The number of operating cycles for the steam generator blowdown lines was evaluated in Section 4.3.5. Since the result of the evaluation was that the steam generator blowdown lines would experience less than 7,000 operating cycles for 60 years of operation due to continuous blowdown, the fatigue analysis is valid for the period of extended operation.

Disposition: Validation, 10 CFR 54.21(c)(1)(i) and Aging Management, 10 CFR 54.21(c)(1)(iii)

Validation – Steam Generator Blowdown Lines Flued Heads

The 14,000 additional thermal cycles used in the original analysis for the steam generator blowdown lines is greater than the maximum of 7,000 cycles which are expected in 60 years. Therefore the fatigue analysis for the steam generator blowdown line flued heads is valid for the period of extended operation in accordance with 10 CFR 54.21(c)(1)(i).

Aging Management

The original number of transients used in the containment airlocks, hatches, penetration sleeves, end plates, and flued head analyses (not including the steam generator blowdown lines flued heads) will be monitored by the DCPP Metal Fatigue of the Reactor Coolant Pressure Boundary program, described in Sections 4.3.1 and B3.1, to ensure that fatigue will be adequately managed for the period of extended

operation in accordance with 10 CFR 54.21(c)(1)(iii). Action limits will permit completion of corrective actions before the design basis number of events is exceeded

4.7 PLANT-SPECIFIC TIME-LIMITED AGING ANALYSES

4.7.1 Crane Load Cycle Limits

Summary Description

Design guidance for cranes used to handle heavy loads over structures, systems, and components important to safety is provided in NUREG-0612, *Control of Heavy Loads at Nuclear Power Plants*. Guideline 7, Article 5.1.1 of NUREG-0612 recommends compliance with Chapter 2 of ANSI B30.2-1976, *Overhead and Gantry Cranes* and Crane Manufacturers Association of America Specification Number 70 (CMAA-70), *Specifications for Electric Overhead Traveling Cranes* for crane design. The design criteria of CMAA-70 are based on the estimated number of load cycles (crane lifts) over the service life of the component and design to these criteria is therefore a TLAA in accordance with 10 CFR 54.3.

The DCPP cranes were designed to other industrial standards, before publication of these documents, as discussed in DCPP FSAR Section 9.1.4.2.1 and Design Criteria Memoranda (DCMs). In the response to NUREG-0612, DCPP compared these designs to the NUREG-0612 guidelines to demonstrate that the intent of Chapter 2-1 of ANSI B30.2-1976 and CMAA-70 was met. The NRC concurrence is documented in Appendix A to Supplement 27 to the DCPP Safety Evaluation Report.

DCPP cranes within the scope of NUREG-0612 carry heavy loads, i.e. loads over 1,972 lb, over components required for plant shutdown or decay heat removal, or over irradiated fuel in the reactor vessel or spent fuel pool, and are controlled by the Heavy Loads Program described in FSAR Section 9.1.4.3.5. These are designated as Category 1 cranes. The DCPP Category 1 cranes that meet NUREG-0612 requirements and are within the scope of license renewal with a TLAA associated with their design are:

- Containment Polar Crane (one for each unit)
- Missile Shield Hoist (one for each unit)
- Fuel Handling Area Crane
- Turbine Building Crane (one for each unit)
- Intake Structure Crane

Additional cranes used at DCPP are described in FSAR Section 9.1.4.2.1. These cranes are outside the scope of NUREG-0612 because their loads are less than the defined threshold for heavy loads of 1,972 lb. These additional cranes are:

- Reactor Cavity Manipulator Crane (one for each unit)
- Spent Fuel Pool Bridge Crane (one for each unit)
- Containment Dome Service Crane (one for each unit)

Table 4.7-1 displays DCPP crane design requirements.

Analysis

The Category 1, Service Class F cranes built in accordance with AISE Standard No. 6 (Containment Polar, Fuel Handling Area, Turbine Building, and Intake Structure Cranes) were designed for more than 2,000,000 load cycles. This far exceeds the number of lifts that any of the DCPP cranes would make over the extended life of the plant. Based on industry experience, the Spent Fuel Pool Bridge Crane[8] is the most used crane of those within the scope of license renewal. Assuming full core offloads and subsequent reloading of the core every refueling outage, as well as loading of fuel into casks for dry cask storage, would conservatively result in approximately 53,000 lifts over a 60-year period. Applying a conservative safety factor of 1.25 would bring the estimate to 66,000 lifts, only about 3.3 percent of the 2,000,000 design cycles.

The missile shield hoist cranes and containment dome service cranes were designed to CMAA-70 requirements. The containment dome service cranes are designed to Service Class A and the missile shield hoist cranes are designed to an unspecified service class, so Service Class A is assumed. Service Class A cranes are designed for 20,000 to 100,000 maximum rated lifts (load cycles). The total number of load cycles for 60 years are well below even the lower edge of the range of 20,000 lifts. Assuming 120 refueling outages for an operating period of 60 years, it would require 166 lifts each refueling outage to reach 20,000 lifts. The containment dome service cranes typically perform less than 10 lifts per outage. The Unit 2 missile shield hoist crane was removed from containment as part of the

[8] The Spent Fuel Pool Bridge Crane is not designed to AISE Standard No. 6. Since it is the most-limiting crane in this evaluation, its cycles are projected for 60 years only to demonstrate that the AISE Standard No. 6 cranes will not exceed the design criterion of 2,000,000 load cycles.

Unit 2 replacement reactor vessel closure head (RRVCH) project during the 15th refueling outage beginning in October 2009. The Unit 1 missile shield hoist crane will be removed from containment as part of the Unit 1 RRVCH project during the 16th refueling outage beginning in October 2010. Therefore, their design will not be applicable during the period of extended operation.

The Class C, Moderate Service, requirements of EOCI Design Specification #61 do not provide a limiting number of load cycles for the crane designed to it, i.e. the Reactor Cavity Manipulator Crane. Rather, the specification states that the calculated static stress in the material, based on rated load, shall not exceed 20 percent of the assumed average ultimate strength of the material. Since the design specification does not consider the effects of aging and is not dependent upon 40 years of operation, the design of the Reactor Cavity Manipulator Crane is not a TLAA under 10 CFR 54.3(a) Criteria 2 and 3.

The Westinghouse design specifications for the Spent Fuel Pool Bridge Crane do not provide a limiting number of load cycles. The specifications state that the design load plus structural weight shall be 1/5 (20 percent) of the ultimate strength of the material. Since the design specification does not consider the effects of aging and is not dependent upon 40 years of operation, the design of the Spent Fuel Pool Bridge Crane is not a TLAA under 10 CFR 54.3(a) Criteria 2 and 3.

Disposition: Validation, 10 CFR 54.21(c)(1)(i)

All of the DCPP cranes within the scope of license renewal either have no limiting number of loading cycles, i.e. the Reactor Cavity Manipulator and Spent Fuel Pool Bridge Cranes, in which case no TLAA exists, or are designed for more load cycles than the maximum number expected for a 60-year period of operation. The crane designs are valid for the period of extended operation in accordance with 10 CFR 54.21(c)(1)(i).

Table 4.7-1 Crane Specifications

Component Name	FSAR Section	Design Specification	Service Class	Allowable Load Cycles	Validity of the Allowable Lifts for 60 Years
Containment Polar Crane (one for each unit)	9.1.4.3.5	AISE Standard No. 6, Category 1	F	2,000,000	Yes – Allowed cycles are greater than that expected for any crane at DCPP.
Missile Shield Hoist (one for each unit)	9.1.4.3.5	CMAA-70	A[(a)]	20,000 - 100,000	N/A – The Unit 2 crane was removed in 2009. The Unit 1 crane will be removed in 2010.
Fuel Handling Area Crane	9.1.4.3.5	AISE Standard No. 6, Category 1	F	2,000,000	Yes – Allowed cycles are greater than that expected for any crane at DCPP.
Turbine Building Crane (one for each unit)	9.1.4.3.5	AISE Standard No. 6, Category 1	F	2,000,000	Yes – Allowed cycles are greater than that expected for any crane at DCPP.
Intake Structure Crane	9.1.4.3.5	AISE Standard No. 6, Category 1	F	2,000,000	Yes – Allowed cycles are greater than that expected for any crane at DCPP.
Reactor Cavity Manipulator Crane (one for each unit)	9.1.4.2.1	Specification #61 of the Electric Overhead Crane Institute Association, Moderate Service	C	20% of ultimate strength of material	N/A – Design is not limited to a specific number of lifts.

Table 4.7-1 Crane Specifications

Component Name	FSAR Section	Design Specification	Service Class	Allowable Load Cycles	Validity of the Allowable Lifts for 60 Years
Spent Fuel Pool Bridge Crane (one for each unit)	9.1.4.2.1	Westinghouse Equipment Specification No. 676470	N/A	20% of ultimate strength of material	N/A – Design is not limited to a specific number of lifts.
Containment Dome Service Crane (one for each unit)	9.1.4.2.1	CMAA-70	A	20,000 - 100,000	Yes – The crane typically performs less than 10 lifts per outage.

[a] The missile shield hoist crane is designed to an unspecified service class level, thus the minimum service class level, Service Class A, is assumed.

4.7.2 TLAAs Supporting Repair of Alloy 600 Materials

Summary Description

Both Alloy 600 base material and Alloy 82/182 weld material have exhibited susceptibility to primary water stress corrosion cracking (PWSCC). Evaluations of these effects, or analyses in support of repairs to affected locations, can be TLAAs.

Westinghouse performed an assessment of PWSCC susceptibility for Alloy 600 components and Alloy 82/182 welds in DCPP Units 1 and 2. This assessment provided guidance to DCPP for inspection of these materials, but was not time-dependent and is therefore not a TLAA. Weld overlay repairs have only been implemented on the Unit 2 pressurizer nozzles.

Pressurizer

The Unit 1 pressurizer and its nozzles and safe ends contain no Alloy 600 or Alloy 82/182 weld material.

The Unit 2 pressurizer contains Alloy 600 material only as Alloy 82/182 welds attaching the surge, spray, and relief valve nozzles to the safe ends, and the safe ends to the connecting piping. Complete Alloy 690 structural weld overlays were completed on all of these locations during Unit 2 Refueling Outage 14 (2R14, Spring 2008) to mitigate effects of primary water stress corrosion cracking (PWSCC) in the original Alloy 82/182 welds. The results of the inspection and repairs were reported to the NRC in letter DCL-08-039. The overlays were supported by fatigue crack growth analyses. These fatigue crack growth analyses were projected to the end of the period of extended operation, and are therefore valid for the period of extended operation in accordance with 10 CFR 54.21(c)(1)(i).

No base-metal corrosion analyses exist for the pressurizers, since no half-nozzle or similar repairs have exposed the base metal to reactor coolant.

Reactor Vessel

There have been no mechanical stress improvement process (MSIP), mechanical nozzle seal assembly (MNSA), half-nozzle, or weld overlay repairs to reactor vessel Alloy 600 nozzle locations. Since there have been no MSIP, MNSA, half-nozzle, or weld overlay repairs to reactor vessel Alloy 600 nozzle locations, no TLAA exists supporting their installation.

Alloy 600 components previously existed in the reactor vessel heads. However, the reactor vessel head replacement was performed during Unit 2 Refueling Outage 15 (2R15, October 2009) and is scheduled for Unit 1 Refueling Outage 16 (1R16, October 2010). All components penetrating the new reactor vessel closure heads and welded to the inner surfaces of the reactor vessel closure heads will be replaced with Alloy 690.

See Section 4.3.2.2.

Steam Generators

Alloy 600 components previously existed in the steam generators, but the Unit 1 steam generators were replaced during Unit 1 Refueling Outage 15 (1R15, Spring 2009) and the Unit 2 steam generators were replaced during Unit 2 Refueling Outage 14 (2R14, Spring 2008). Replacement steam generators contain no Alloy 600 or Alloy 82/182 welds.

See Section 4.3.2.5.

Alloy 600 Program and Other Locations

DCPP procedural guidance provides a comprehensive Alloy 600 control program for materials in the RCS. Any repairs made to Alloy 600 locations, including mechanical stress improvement process, mechanical nozzle seal assembly, half-nozzle, or weld overlay repairs, will be implemented in accordance with this guidance. However, other than the Unit 2 pressurizer, as discussed above, none of the locations have yet been subject to repairs. In the absence of analyses, no TLAAs exist.

The Plant Specific Nickel-Alloy Aging Management Program is discussed in Section B2.1.37.

4.7.3 Absence of a TLAA for Reactor Vessel Underclad Cracking Analyses

Summary Description

NUREG-1800 identifies “Intergranular separation in the heat-affected zone (HAZ) of reactor vessel low-alloy steel under austenitic SS cladding” as a potential TLAA.

Intergranular separations (underclad cracking) in low-alloy steel heat-affected zones under austenitic stainless steel weld claddings have been reported to exist in SA-508, Class 2, reactor vessel forgings manufactured to a coarse-grain practice

and clad by high-heat-input submerged arc processes. A detailed analysis of underclad cracks was provided in topical report WCAP-7733 [Reference 11], in which Westinghouse presented a fracture mechanics analysis to justify continued operation of Westinghouse units for 32 EFPY with underclad cracks in the reactor pressure vessels. The analysis reported in WCAP-7733 was identified by the Westinghouse Owners Group and NRC as a TLAA requiring evaluation for license renewal. The Westinghouse Owners Group subsequently evaluated the impact of cracks beneath austenitic stainless steel weld cladding on reactor pressure vessels (RPV) integrity in WCAP-15338-A [Reference 8], which was approved by the NRC in July 2002 to include all Westinghouse plants.

Analysis

WCAP-15338-A demonstrates that fatigue growth of the subject flaws will be minimal over 60 years. The WCAP-15338-A generic 60-year flaw growth analysis assumes 1.5 times the number of 40-year design basis cycles and transient events specified for a typical Westinghouse 2, 3, or 4-loop vessel. The assumed numbers of WCAP-15338-A design transients are bounded by the numbers in FSAR Table 5.2-4, except for feedwater cycling at hot shutdown. This transient is monitored by the enhanced Fatigue Management Program to an administrative limit that is lower than the number of events used by WCAP-15338-A. Since these analyses qualify vessels for the extended 60-year rather than the current 40-year operating term, they are not TLAAs under 10 CFR 54.3(a) Criterion 3.

Neither WCAP-7733 nor WCAP-15338-A is currently cited by the DCPP licensing basis. DCPP credits the DCPP ISI program for examining applicable reactor vessel components susceptible to underclad cracking. Only the reactor vessel flange, and inlet and outlet nozzles are fabricated from SA-508, Class 2 forgings (FSAR, Tables 5.2-11, 5.2-12, 5.2-17, 5.2-18A, and 5.2-18B).

The DCPP ISI program examines the reactor vessel SA-508 flange to shell weld and SA-508 inlet and outlet nozzles per ASME Code 2001 Edition through the 2003 addenda. A review of Owner's Inspection Reports for the second 10-year ISI interval and for the Unit 1 and Unit 2 fourteenth refueling outages (Spring 2007 and Spring 2008, respectively), which were the first outages within the third 10-year ISI interval, showed no recorded indications in the reactor vessel flange welds or nozzles requiring engineering analysis or monitoring.

4.7.4 Absence of a TLAA for a Reactor Coolant Pump Flywheel Fatigue Crack Growth Analysis

Summary Description

NUREG-1800 identifies “Fatigue analysis of the reactor coolant pump flywheel” as a potential TLAA.

During normal operation, the reactor coolant pump flywheel possesses sufficient kinetic energy to potentially produce high-energy missiles inside containment and could also damage pump seals or other pressure boundary components in the unlikely event of failure. Conditions that may result in overspeed of the reactor coolant pump increase both the potential for failure and the kinetic energy. The aging effect of concern is fatigue crack initiation in the flywheel bore keyway. This concern is the subject of Regulatory Guide 1.14, *Reactor Coolant Pump Flywheel Integrity*. At DCPP, flywheel fatigue is a recognized aging effect, but the aging effect is not the subject of a TLAA.

The original DCPP SER, NUREG-0675, states that the RCP motor flywheel is designed to meet the guidelines of Regulatory Guide 1.14. The DCPP flywheel design and its compliance with Regulatory Guide 1.14 is described in the FSAR Section 5.2.6. The inspection recommendations are incorporated in the DCPP ISI Program and are required by the TS.

To reduce the inspection frequency and scope, DCPP amended its initial compliance with Regulatory Guide 1.14 by implementing WCAP-14535-A [Reference 9], which supports relaxation of the inspection required by Regulatory Guide 1.14 Position C.4.b(1) and (2). The NRC has reviewed and accepted this topical report for use in license renewal applications. This relaxation was approved for DCPP with the Improved TS conversion [Reference 12] and was incorporated into the DCPP ISI Program and the TS.

Analysis

WCAP-14535-A [Reference 9] performed an evaluation of the probability of failure over the period of extended operation for all operating Westinghouse plants. It demonstrates that the flywheel design has a high structural reliability with a very high flaw tolerance and negligible flaw crack extension over a 60-year service life (assuming 6,000 pump starts). Since the evaluation is based on the 60-year operating period rather than the current licensed operating period (40 years), it is not a TLAA under 10 CFR 54.3 Criterion 3.

4.7.5 Inservice Flaw Growth Analyses that Demonstrate Structural Stability for 40 Years

Summary Description

The ISI procedure states that a fracture mechanics analysis, in accordance with ASME Section XI Code, Subsection IWB-3600, must be completed if a flaw acceptance criterion is not met as outlined in the corresponding test procedure. These analyses depend on a specified number of operating years, and thus may be TLAAs for DCPP.

Analysis

Unit 2 RHR Piping Weld RB-119-11

During a routine inservice inspection prior to DCPP Unit 2 Refueling Outage 13 (2R13) in 2006, a circumferential flaw was identified in Weld RB-119-11 of the residual heat removal (RHR) system.

The observed flaw did not meet the Section XI acceptance standards of Table IWB-3514-2. Consequently, the indication was evaluated per the guidelines of Section XI, IWB-3640. A conservative fatigue crack growth evaluation was then performed to determine the adequacy of the piping system for continued operation. The evaluation was submitted to the NRC for review, as required by the Code, in PG&E Letter DCL-06-069. The service life for Weld RB-119-11 is based on operating for 40 years from the date the flaw was identified, i.e. until 2046, during which the flaw would experience 500 startup-shutdown cycles. Thus, the evaluation encompassed a 60-year plant life and the analysis will be valid beyond the 2045 end date of the period of extended operation for Unit 2.

The cycle assumptions used in the analysis are conservative compared to the DCPP original design cycles described in Section 4.3.1.1. The DCPP licensing basis assumes 250 heatups and 250 cooldowns for a 50 year plant life.

Since the analysis indicates that the allowable flaw depth will not be reached for the next 40 years of plant operation beginning in October 2006, the flaw evaluation of RHR Weld RB-119-11 will remain valid for the period of extended operation in accordance with 10 CFR 54.21(c)(1)(i).

Unit 2 Auxiliary Feedwater Piping Line 567

During Unit 2 Refueling Outage 8 (2R8), while performing a non-routine surface examination prior to maintenance, DCPP identified a flaw indication in the auxiliary feedwater pump recirculation header Line 567, that exceeds Section XI, Table IWB-3410-1 criteria. The flaw has been accepted by analysis by meeting the allowable size criteria of IWB-3620 and IWB-3610 and was submitted to the NRC in PG&E Letter DCL-99-136.

The numbers of thermal and seismic cycles used in the analysis are consistent with or more conservative than the DCPP 50-year design basis described in FSAR Table 5.2-4. The assumed transients are consistent with or bounded by the 50 year licensing basis. The number of transients will be monitored by the enhanced Fatigue Management Program. The enhanced Fatigue Management Program provides assurance that the fatigue crack growth analysis will be managed for the period of extended operation in accordance with 10 CFR 54.21(c)(1)(iii).

Unit 1 RHR Piping Weld WIC-95

During Unit 1 Refueling Outage 9 (1R9), while performing an inservice inspection, DCPP identified a weld flaw indication located in an ASME Class 2 portion of the RHR injection Line 985 to hot legs 1 and 2 at weld WIC-95. The indication exceeded the Section XI, Table IWC-3410-1 criteria. The flaw has been accepted by analysis in accordance with IWB-3410 and was submitted to the NRC in PG&E Letter DCL-97-086.

The number of seismic cycles used in the analysis is consistent with the DCPP 50-year design basis described in FSAR Table 5.2-4. There have been no occurrences of a DE, DDE, or Hosgri seismic event at DCPP during the first 20 plus years of operation. Therefore, the seismic cycles in the Unit 1 RHR Weld WIC-95 fatigue crack growth evaluation for the 50-year design basis number of DE, DDE, and Hosgri events is sufficient to the end of the period of extended operation. Therefore, the analysis is valid for the period of extended operation, in accordance with 10 CFR 54.21(c)(1)(i).

Disposition: Validation, 10 CFR 54.21(c)(1)(i); and Aging Management, 10 CFR 54.21(c)(1)(iii)

Validation - Flaw Evaluation of Unit 2 RHR Piping Weld RB-119-11

The result indicates that the allowable flaw depth will not be reached for the next 40 years of plant operation beginning in October 2006. Therefore, the flaw evaluation

of RHR Weld RB-119-11 will remain valid for the period of extended operation in accordance with 10 CFR 54.21(c)(1)(i).

Validation - Flaw Evaluation of Unit 1 RHR Weld WIC-95

There have been no occurrences of a DE, DDE, or Hosgri seismic event at DCPP during the first 20 plus years of operation. Therefore, the seismic cycles in the Unit 1 RHR Weld WIC-95 fatigue crack growth evaluation for the 50-year design basis number of DE, DDE, and Hosgri events is sufficient to the end of the period of extended operation. Therefore, the analysis is valid for the period of extended operation, in accordance with 10 CFR 54.21(c)(1)(i).

Aging Management - Unit 2 Auxiliary Feedwater Piping Line 567

The Metal Fatigue of the Reactor Coolant Pressure Boundary program (B3.1) monitors fatigue design transients including the transients assumed in the fatigue crack growth analyses for the Unit 2 auxiliary feedwater piping Line 567. The program provides assurance that the fatigue crack growth analysis will be managed for the period of extended operation in accordance with 10 CFR 54.21(c)(1)(iii).

4.8 TLAAS SUPPORTING 10 CFR 50.12 EXEMPTIONS

Pursuant to 10 CFR 54.21(c)(2), this section identifies the plant-specific 10 CFR 50.12 exemptions for DCPP that are currently in effect; identifies those based on a TLAA; and evaluates the TLAA-based exemptions for the period of extended operation. The NUREG-1800 requires a review of these exemptions to determine whether any are supported by TLAAs.

From a search of the current licensing basis, fifteen 10 CFR 50.12 exemptions were identified. Fourteen 10 CFR 50.12 exemptions are currently in effect for DCPP. Of those, only one exemption, the use of the "Leak-Before-Break (LBB) Evaluation of Reactor Coolant System Piping for DCPP, Unit No. 1 (TAC No. M83283) and Unit No. 2 (TAC No. M83284)" dated March 3, 1993, is based in part on a time-limited aging analysis. The LBB analysis is described in Section 4.3.2.12.

The disposition of this exemption is dependent on the disposition of the LBB analysis presented in Section 4.3.2.12.

4.9 REFERENCES

1. DCPP PTLR-1. *Pressure and Temperature Limits Report, PTLR for Diablo Canyon,* Units 1 and 2. Rev. 9.

2. Westinghouse Report WCAP-15958. *Analysis of Capsule V from Pacific Gas and Electric Company Diablo Canyon Unit 1 Reactor Vessel Radiation Surveillance Program*. Rev. 0. January 2003. Westinghouse Non-Proprietary Class 3.

3. Westinghouse Report WCAP-15423. *Analysis of Capsule V from Pacific Gas and Electric Company Diablo Canyon Unit 2 Reactor Vessel Radiation Surveillance Program*. Rev. 0. September 2000. Westinghouse Non-Proprietary Class 3.

4. Westinghouse Report WCAP-12416. *Evaluation of Thermal Stratification for the Diablo Canyon Units 1 and 2 Pressurizer Surge Line*. (Non-Proprietary) Westinghouse Electric Corporation. November 1989.

5. Westinghouse Report WCAP-13895, *A Demonstration of Applicability of ASME Code Case N-481 to the Primary Loop Pump Casings of the Diablo Canyon Nuclear Power Plants Units 1 and 2*. October 1993

6. Westinghouse Report WCAP-13039. *Technical Justification for Eliminating Large Primary Loop Pipe Rupture as the Structural Design Basis for the Diablo Canyon Units 1 and 2 Nuclear Power Plants*. November 1991. Westinghouse Proprietary Class 2.

7. Westinghouse Report WCAP-14756-A. R. F. Condrac and W. S. LaPay (Westinghouse); and Dale Krause and Eric Blocher (Gilbert Commonwealth). Westinghouse Owners Group Generic License Renewal Program Topical Report. *Aging Management Evaluation for the Pressurized Water Reactor Containment Structure*. Pittsburgh: Westinghouse Electric Company, May 2001.

8. Westinghouse Report WCAP-15338-A. Westinghouse Owners Group Generic License Renewal Program Topical Report. Warren Bamford and R. D. Rishel. *A Review of Cracking Associated with Weld Deposited Cladding in Operating PWR Plants*. Pittsburgh: Westinghouse Electric Company LLC, October 2002.

9. Westinghouse Report WCAP-14535-A. Westinghouse Topical Report. P. L. Strauch et al. *Topical Report on Reactor Coolant Pump Motor Flywheel Inspection Elimination*. Pittsburgh: Westinghouse, November 1996.

10. DCPP Design Criteria Memorandum (DCM) T-1D. "Containment Structure – Liner." Rev. 5, 7 March 2006.

11. Westinghouse Report WCAP-7733. Westinghouse Topical Report. *Reactor Vessels Weld Cladding – Base Metal Interaction*. July 1971.

12. US NRC Letter. From Jack N. Donohew, Senior Project Manager, Section 1, Project Directorate IV & Decommissioning, Division of Licensing Project Management, Office of Nuclear Reactor Regulation; to Mr. Gregory M. Rueger, Senior Vice President and General Manager, DCPP. "Conversion to Improved Technical Specifications for Diablo Canyon Power Plant, Units 1 and 2 – Amendment No. 135 to Facility Operating License Nos. DPR 80 and DPR 82 (TAC Nos. M98984 and M98985)." 28 May 1999.

13. US NRC Letter. Alan Wang, Project Manager, Plant Licensing Branch IV, Division of Operating Reactor Licensing, Office of Nuclear Reactor Regulation; to Mr. John Conway, Senior Vice President – Station Generation and Chief Nuclear Officer, DCPP. "Diablo Canyon Nuclear Power Plant, Unit No. 1 – Approval of Proposed Reactor Vessel Material Surveillance Capsule Withdrawal Schedule (TAC No. MD8371)." 24 September 2008.

14. DCPP Units 1 and 2 Calculation No. 9000007298, "Reactor Vessel Fluence Evaluation in Support of the License Renewal Application." Rev. 1. 18 September 2009.

15. NRC Memorandum M090922A. "Staff Requirements - Affirmation Session, 9:25 A.M., Tuesday, September 22, 2009, Commissioners' Conference Room, One White Flint North, Rockville, Maryland (Open to Public Attendance)." 22 September 2009.

16. This reference intentionally left blank.

17. Westinghouse Report WCAP-15782. *Analysis Fast Neutron Fluence and Neutron Dosimetry Evaluations for the Diablo Canyon Unit 2 Reactor Pressure Vessel*. Rev. 0. December 2001. Westinghouse Non-Proprietary Class 3.

18. Calculation FP-PGE-305. *Cycle and Fatigue Baseline up through YE 2008 for Diablo Canyon Power Plant*. Rev. 1. 24 July 2009.

19. Westinghouse Letter LTR-RIDA-09-97. *Diablo Canyon Units 1 and 2 - Reactor Internals Components Fatigue Usage Data*, 6 May 2009.

20. Westinghouse Report WCAP-17103. *Diablo Canyon Unit 1 Insurge/Outsurge and Environmental Fatigue Evaluations*. Rev. 1. October 2009. Westinghouse Proprietary Class 2.

21. Westinghouse Report WCAP-17104. *Diablo Canyon Unit 2 Insurge/Outsurge and Environmental Fatigue Evaluations*. Rev. 0. July 2009. Westinghouse Proprietary Class 2.

22. NRC Incoming Correspondence. *Closeout of Staff Activities on NRC Bulletin 88-11, "Pressurizer Surge Line Thermal Stratification For Diablo Canyon (TAC Nos. M72129 and M72130)*. July 30, 1992.

23. Westinghouse Calculation Note, CN-RIDA-08-30. *Diablo Canyon Units 1 and 2 Tavg Window Structural Evaluation*. Rev. 0. 26 September 2008. Westinghouse Proprietary Class 2.

24. Westinghouse Calculation CN-RCDA-05-102. “Upper Core Plate Analysis for the Diablo Canyon Unit 2 Upflow Conversion and Upper Head Temperature Reduction Projects." Rev. 0. 12 October 2005.

25. Westinghouse Report WCAP-14587. *Lower Core Plate Evaluation for the Diablo Canyon Power Uprating / 24-Month Fuel Cycle Length Program*. Rev. 0. March 1996.

26. SIA Calculation PGE-127-301P. *Diablo Canyon Environmentally-Assisted Fatigue (EAF) Analysis*. Rev. 4. Contains Vendor Proprietary Information. Structural Integrity Associates, Inc. San Jose, California. 24 July 2009.

27. SIA Calculation 0800389.311. *RHR-Accumulator Tee Fatigue Analysis*. Rev. 0. Contains Vendor Proprietary Information. Structural Integrity Associates, Inc. San Jose, California. 7 November 2008.

28. SIA Calculation 0800389.305. *Charging Nozzle Environmentally-Assisted Fatigue Calculation*. Rev. 0. Structural Integrity Associates, Inc. San Jose, California. 27 January 2009.

29. SIA Calculation 0800389.321. *Charging Nozzle Environmentally-Assisted Fatigue (EAF) Analysis Using Bounding Projected 60 Year Numbers of Cycles*. Rev. 0. Structural Integrity Associates, Inc. San Jose, California. 24 July 2009.

30. SIA Calculation 0800389.310. *Hot Leg Surge Nozzle Environmentally-Assisted Fatigue (EAF) Analysis*. Rev. 0. Structural Integrity Associates, Inc. San Jose, California. 29 January 2009.

31. SIA Calculation 0800389.322. *Hot Leg Surge Nozzle Environmentally-Assisted Fatigue (EAF) Analysis Using Bounding Projected 60 Year Numbers of Cycles*. Rev. 0. Structural Integrity Associates, Inc. San Jose, California. 24 July 2009.

32. SIA Calculation 0800389.323. *Safety Injection Nozzle Environmentally-Assisted Fatigue (EAF) Analysis Using Bounding Projected 60 Year Numbers of Cycles*. Rev. 0. Structural Integrity Associates, Inc. San Jose, California. 24 July 2009.

33. SIA Calculation 0800389.320. *Safety Injection Nozzle Environmentally-Assisted Fatigue Calculation*. Rev. 0. Structural Integrity Associates, Inc. San Jose, California. 9 February 2009.

34. Westinghouse Report WCAP-16985-P, Rev. 1, "Diablo Canyon Units 1 and 2 Tavg and Tfeed Ranges Program NSSS Engineering Report, December 2008.

35. DCPP Calculation. "Fatigue Design Waiver Evaluation Report: Penetration Sleeves, End Plates, Emergency Airlock and Personnel Access Hatch." June 2009.

36. US NRC Letter. Harry Rood, Senior Project Manager, Project Directorate V, Division of Reactor Projects, Office of Nuclear Reactor Regulation; to Mr. J.D. Schiffer, Senior Vice President – Nuclear Power Generation, DCPP. *NRC Bulletin 88-08, Thermal Stresses in Piping Connected to Reactor Coolant Systems (TAC Nos. 69623 and 69624)*. 11 April 1991.

37. Westinghouse Letter LTR-REA-09-90. *Neutron Fluence Evaluation for the Diablo Canyon Units 1 and 2 Reactor Pressure Vessel Extended Beltline Materials*. 21 May 2009.

APPENDIX A

FINAL SAFETY ANALYSIS REPORT SUPPLEMENT

APPENDIX A - TABLE OF CONTENTS

A0 APPENDIX A INTRODUCTION A-1
A1 SUMMARY DESCRIPTIONS OF AGING MANAGEMENT PROGRAMS A-2
A1.1 ASME Section XI Inservice Inspection, Subsections IWB, IWC, and IWD A-2
A1.2 Water Chemistry A-2
A1.3 Reactor Head Closure Studs....A-3
A1.4 Boric Acid Corrosion A-3
A1.5 Nickel-Alloy Penetration Nozzles Welded To The Upper Reactor Vessel Closure Heads of Pressurized Water Reactors....A-4
A1.6 Flow-Accelerated Corrosion A-4
A1.7 Bolting Integrity A-5
A1.8 Steam Generator Tube Integrity....A-5
A1.9 Open-Cycle Cooling Water System....A-6
A1.10 Closed-Cycle Cooling Water System A-6
A1.11 Inspection of Overhead Heavy Load and Light Load (Related to Refueling) Handling Systems A-6
A1.12 Fire Protection....A-7
A1.13 Fire Water System A-7
A1.14 Fuel Oil Chemistry....A-8
A1.15 Reactor Vessel Surveillance A-8
A1.16 One-Time Inspection A-9
A1.17 Selective Leaching of Materials....A-10
A1.18 Buried Piping and Tanks Inspection....A-10
A1.19 One-Time Inspection of ASME Code Class 1 Small-Bore Piping....A-11
A1.20 External Surfaces Monitoring Program A-11
A1.21 Flux Thimble Tube Inspection A-11
A1.22 Inspection of Internal Surfaces in Miscellaneous Piping and Ducting Components....A-12
A1.23 Lubricating Oil Analysis....A-12
A1.24 Electrical Cables and Connections Not Subject to 10 CFR 50.49 Environmental Qualification Requirements A-13
A1.25 Electrical Cables and Connections Not Subject to 10 CFR 50.49 Environmental Qualification Requirements Used In Instrumentation Circuits A-14
A1.26 Inaccessible Medium Voltage Cables Not Subject to 10 CFR 50.49 Environmental Qualification Requirements A-15
A1.27 ASME Section XI, Subsection IWE A-15
A1.28 ASME Section XI, Subsection IWL....A-16

A1.29 ASME Section XI, Subsection IWF A-16
A1.30 10 CFR PART 50, Appendix J....A-16
A1.31 Masonry Wall Program....A-17
A1.32 Structures Monitoring Program A-17
A1.33 RG 1.127, Inspection of Water-Control Structures Associated with Nuclear Power Plants....A-18
A1.34 Fuse Holders....A-18
A1.35 Electrical Cable Connections Not Subject to 10 CFR 50.49 Environmental Qualification Requirements A-18
A1.36 Metal Enclosed Bus A-19
A1.37 Nickel-Alloy Aging Management Program....A-20
A1.38 Transmission Conductor and Connections, Insulators and Switchyard Bus and Connections....A-20
A1.39 Thermal Aging Embrittlement of Cast Austenitic Stainless Steel A-21
A2 SUMMARY DESCRIPTIONS OF TIME-LIMITED AGING ANALYSIS AGING MANAGEMENT PROGRAMS....A-22
A2.1 Metal Fatigue of Reactor Coolant Pressure Boundary A-22
A2.2 Environmental Qualification (EQ) of Electrical Components A-22
A3 EVALUATION SUMMARIES OF TIME-LIMITED AGING ANALYSES A-24
A3.1 Reactor Vessel Neutron Embrittlement A-24
A3.1.1 Neutron Fluence Values....A-24
A3.1.2 Pressurized Thermal Shock A-25
A3.1.3 Charpy Upper-Shelf Energy A-26
A3.1.4 Pressure-Temperature Limits....A-26
A3.1.5 Low Temperature Overpressure Protection A-26
A3.2 METAL FATIGUE ANALYSIS A-28
A3.2.1 ASME III Class A Fatigue Analysis of Vessels, Piping, and Components....A-29
A3.2.2 Fatigue Analyses of the Reactor Pressure Vessel Internals A-33
A3.2.3 Effects of the Reactor Coolant System Environment on Fatigue Life of Piping and Components (Generic Safety Issue 190)....A-34
A3.2.4 Assumed Thermal Cycle Count for Allowable Secondary Stress Range Reduction Factor in ANSI B31.1 Piping A-35
A3.2.5 Fatigue Design and Analysis of Class IE Electrical Raceway Support Angle Fittings for Seismic Events....A-36
A3.3 ENVIRONMENTAL QUALIFICATION OF ELECTRIC EQUIPMENT....A-37
A3.4 CONTAINMENT CONCRETE, LINER, AND PENETRATIONS....A-39
A3.4.1 Design Cycles for Containment Penetrations....A-39
A3.5 PLANT-SPECIFIC TIME-LIMITED AGING ANALYSES....A-41

A3.5.1 Load Cycle Limits of Cranes to CMAA-70 ..... A-41
A3.5.2 TLAAs Supporting Repair of Alloy 600 Materials A-41
A3.5.3 Inservice Flaw Growth Analyses that Demonstrate Structural Stability for 40 Years A-41

A4 LICENSE RENEWAL COMMITMENTS A-43

A0 APPENDIX A INTRODUCTION

Introduction

This appendix provides the information to be submitted in a Supplement to the Final Safety Analysis Report (FSAR) Update as required by 10 CFR 54.21(d) for the DCPP License Renewal Application. Section A1 of this appendix contains summary descriptions of the programs used to manage the effects of aging during the period of extended operation. Section A2 contains summary descriptions of programs used for management of time-limited aging analyses during the period of extended operation. Section A3 contains evaluation summaries of TLAAs for the period of extended operation. Section A4 contains summary descriptions of license renewal commitments. These summary descriptions of aging management programs, time-limited aging analyses, and license renewal commitments will be incorporated in the DCPP FSAR Update following issuance of the renewed operating license in accordance with 10 CFR 50.71(e).

A1 SUMMARY DESCRIPTIONS OF AGING MANAGEMENT PROGRAMS

The integrated plant assessment and evaluation of time-limited aging analyses (TLAA) identified existing and new aging management programs necessary to provide reasonable assurance that components within the scope of license renewal will continue to perform their intended functions consistent with the current licensing basis (CLB) for the period of extended operation. Sections A1 and A2 describe the programs and their implementation activities.

Three elements common to all aging management programs discussed in Sections A1 and A2 are corrective actions, confirmation process, and administrative controls. The DCPP Quality Assurance Program includes the elements of corrective action, confirmation process, and administrative controls, and is applicable to the safety-related and nonsafety-related systems, structures, and components that are subject to aging management activities.

A1.1 ASME SECTION XI INSERVICE INSPECTION, SUBSECTIONS IWB, IWC, AND IWD

ASME Section XI Inservice Inspection, Subsections IWB, IWC, and IWD program manages cracking, loss of fracture toughness, and loss of material in Class 1, 2, and 3 piping and components within the scope of license renewal. The program includes periodic visual, surface, volumetric examinations and leakage tests of Class 1, 2 and 3 pressure-retaining components, including welds, pump casings, valve bodies, integral attachments, and pressure-retaining bolting. DCPP inspections meet ASME Section XI requirements. The DCPP third interval ISI Program is in accordance with 10 CFR 50.55a and ASME Section XI, 2001 Edition through 2003 Addenda. DCPP will use the ASME Code Edition consistent with the provisions of 10 CFR 50.55a during the period of extended operation.

A1.2 WATER CHEMISTRY

The Water Chemistry program manages loss of material and cracking in the primary and secondary water systems. The program relies on monitoring and control of primary and secondary water chemistry to mitigate damage caused by corrosion and stress corrosion cracking. The Water Chemistry program is a mitigation program and does not provide for the detection of aging effects. Inspections of selected components at susceptible locations in a system (e.g., at low flow or stagnant areas)

performed under the separate One-Time Inspection program (A1.16) provide verification of the effectiveness of the Water Chemistry program. The Water Chemistry program is based on the guidelines of EPRI TR-105714, Revision 6 (issued as TR-1014986), *PWR Primary Water Chemistry Guidelines*, and EPRI TR-102134, Revision 7 (issued as TR-1016555), *PWR Secondary Water Chemistry Guidelines* or later revisions.

A1.3 REACTOR HEAD CLOSURE STUDS

The Reactor Head Closure Studs program manages cracking and loss of material by providing periodic visual and volumetric examinations of each of the reactor vessel flange stud hole threads, reactor head closure studs, nuts, and washers every 10 years. The program includes preventive measures as recommended in Regulatory Guide 1.65 to protect the reactor vessel flange stud hole threads, reactor head closure studs, nuts, and washers from wear and corrosion as well as performing visual inspections for leakage at the reactor vessel flange closure during primary system leakage tests. The current DCPP ISI Program implements ASME Code Section XI, Subsection IWB, (2001 Edition including 2002 and 2003 Addenda).

DCPP is required to update its Section XI ISI program and use the ASME Code Edition consistent with the provisions of 10 CFR 50.55a during the period of extended operation.

A1.4 BORIC ACID CORROSION

The Boric Acid Corrosion program manages loss of material due to boric acid leakage. The program includes provisions to identify, inspect, examine and evaluate leakage, and initiate corrective actions. Long-term corrective actions to control boric acid leakage, to impede boric acid leakage, to impede boric acid attack, and to prevent recurrence of previous problems include the use of suitable materials, protective coatings, and cladding. Any increases of reactor coolant system (RCS) leakage during RCS leakage surveillances would require the investigation of potential RCS leakage sources. The program relies in part on implementation of recommendations of NRC Generic Letter 88-05, *Boric Acid Corrosion of Carbon Steel Reactor Pressure Boundary Components in PWR Plants*. Additionally, the program includes scheduled inspection of all plant borated water systems and examinations conducted during ISI pressure tests performed in accordance with ASME Section XI requirements. The program also addresses recommendations in NRC Bulletins 2001-01, 2002-01, 2002-02, 2003-02, and associated requests for additional information, NRC Order EA-03-009, NRC RIS 2003-13, and WCAP-15988-NP, Revision 1.

A1.5 NICKEL-ALLOY PENETRATION NOZZLES WELDED TO THE UPPER REACTOR VESSEL CLOSURE HEADS OF PRESSURIZED WATER REACTORS

The Nickel-Alloy Penetration Nozzles Welded to the Upper Reactor Vessel Closure Heads of Pressurized Water Reactors program manages cracking due to primary water stress corrosion cracking and loss of material due to boric acid wastage in nickel-alloy vessel head penetration nozzles and includes the reactor vessel closure head, upper vessel head penetration nozzles and associated welds. Detection of cracking is accomplished through implementation of a combination of bare metal visual examination (external surface of head) and surface and volumetric examination (underside of head) techniques. This program was developed in response to NRC Order EA-03-009. ASME Code Case N-729-1, subject to the conditions specified in 10 CFR 50.55a(g)(6)(ii)(D)(2) through(6), has superseded the requirements of NRC Order EA-03-009.

The original Unit 1 reactor pressure vessel (RPV) head is planned to be replaced during the 16th refueling outage beginning in October 2010 and the Unit 2 RPV head was replaced during the 15th refueling outage beginning in October 2009. After RPV head replacement, initial and subsequent examinations will be performed in accordance with ASME Code Case N-729-1, subject to the conditions specified in 10 CFR 50.55a(g)(6)(ii)(D)(2) through(6).

A1.6 FLOW-ACCELERATED CORROSION

The Flow-Accelerated Corrosion (FAC) program manages wall thinning due to flow-accelerated corrosion on the internal surfaces of carbon steel piping, elbows, reducers, expanders, and valve bodies which contain high energy fluids (both single phase and two phases). Analytical evaluations and periodic examinations of locations that are most susceptible to wall thinning due to flow accelerated corrosion are used to predict the amount of wall thinning. The program includes analyses to determine critical locations. Initial inspections are performed to determine the extent of thinning at these critical locations, and follow-up inspections are used to confirm the predictions. Inspections are performed using ultrasonic and/or radiographic inspection techniques capable of detecting wall thinning. Repairs and replacements are performed as necessary.

The FAC program is based on EPRI guidelines in NSAC-202L-R3, *Recommendations for an Effective Flow-Accelerated Corrosion Program*. Procedures and methods used by the FAC program are consistent with DCPP's

commitments to NRC Bulletin 87-01, *Thinning of Pipe Wall in Nuclear Power Plants*, and NRC Generic Letter 89-08, *Erosion/Corrosion-Induced Pipe Wall Thinning*.

A1.7 BOLTING INTEGRITY

The Bolting Integrity program manages cracking, loss of material, and loss of preload for pressure retaining bolting and ASME component support bolting. The program includes preload control, selection of bolting material, use of lubricants/sealants consistent with EPRI good bolting practices, and performance of periodic inspections for indication of aging effects. The program also includes the inservice inspection requirements established in accordance with ASME Section XI, Subsections IWB, IWC, IWD, and IWF for ASME Class bolting.

DCPP procedures include requirements for proper disassembling, inspecting, and assembling of connections with threaded fasteners. The general practices that are established in this program are consistent with EPRI NP-5067, *Good Bolting Practices, Volume 1 and Volume 2* and the recommendations delineated in NUREG-1339, *Resolution of Generic Safety Issue 29: Bolting Degradation or Failure in Nuclear Power Plants*, and EPRI TR-104213, *Bolted Joint Maintenance & Applications Guide*.

A1.8 STEAM GENERATOR TUBE INTEGRITY

The Steam Generator Tube Integrity program manages the aging of steam generator tubes, plugs, and tube supports. The scope of the program includes the preventive measures, inspections, degradation assessment, condition monitoring, operational assessment, tube plugging, and leakage monitoring activities necessary to manage potential steam generator tube degradation, including mechanically induced phenomena, such as wear and impingement damage. The aging management measures employed includes non-destructive examination, visual inspection, sludge removal, tube plugging, in-situ pressure testing and maintaining the chemistry environment by removal of impurities and addition of chemicals to control pH and oxygen. NDE inspection scope and frequency, and primary to secondary leak rate monitoring are conducted consistent with the requirements of DCPP Units 1 and 2 Technical Specifications and NEI 97-06, *Steam Generator Program Guidelines*. Performance criteria are maintained for operational leakage, accident induced leakage and structural integrity as prescribed in the Technical Specifications. Tube structural integrity limits consistent with Regulatory Guide 1.121, *Bases for Plugging Degraded PWR Steam Generator Tubes* are applied.

A1.9 OPEN-CYCLE COOLING WATER SYSTEM

The Open-Cycle Cooling Water System program manages cracking, loss of material, and reduction of heat transfer for components that are exposed to the raw water of the DCPP OCCW system. The DCPP OCCW system is the auxiliary saltwater (ASW) system. Components within the scope of the OCCW System program are components of the ASW system and the component cooling water heat exchangers that are cooled by the ASW system. The program includes surveillance and control techniques to manage aging effects caused by biofouling, corrosion, erosion, protective coating failures, and silting in components of the ASW system or structures and components serviced by the ASW system that are within the scope of license renewal. The program also includes periodic visual inspections and non-destructive examinations to detect biofouling, defective coatings, and degraded piping and components of, systems and components, and CCW heat exchanger performance testing, to ensure that the effects of aging on components are adequately managed for the period of extended operation. The program is consistent with commitments as established in DCPP responses to NRC Generic Letter 89-13, *Service Water System Problems Affecting Safety-Related Components*, including Supplement 1.

A1.10 CLOSED-CYCLE COOLING WATER SYSTEM

The Closed-Cycle Cooling Water System program manages loss of material, cracking, and reduction in heat transfer for components within the scope of license renewal in closed-cycle cooling water systems. The program includes maintenance of system chemistry parameters following the guidance of EPRI TR-107396, Revision 1, *Closed Cooling Water Chemistry Guidelines (EPRI-1007820)* to minimize aging.

A1.11 INSPECTION OF OVERHEAD HEAVY LOAD AND LIGHT LOAD (RELATED TO REFUELING) HANDLING SYSTEMS

The Inspection of Overhead Heavy Load and Light Load (Related to Refueling) Handling Systems program manages loss of material for all cranes, trolley and hoist structural components, fuel handling equipment and applicable rails within the scope of license renewal. The program is implemented through periodic visual inspections of components. Crane inspection activities verify structural integrity of the crane components required to maintain the crane's intended function. Visual inspections assess conditions such as loss of material due to corrosion of structural members and visible signs of rail wear. The inspection requirements are consistent with the

guidance provided by NUREG-0612, *Control of Heavy Loads at Nuclear Power Plants* for load handling systems that handle heavy loads which can directly or indirectly cause a release of radioactive material, applicable industry standards (such as CMAA Specification No. 70 and ANSI B30.11) for other cranes within the scope of license renewal.

A1.12 FIRE PROTECTION

The Fire Protection program is a condition monitoring and performance monitoring program comprised of tests and inspections that follow the applicable National Fire Protection Association (NFPA) recommendations. The Fire Protection program manages loss of material for fire rated doors, fire dampers, lightning rods, lightning rod mounting structures, lightning rod ground connections, and the CO_2 fire suppression system; cracking, spalling, and loss of material for fire barrier walls, ceilings, and floors; and hardness and shrinkage of fire barrier penetration seals. The Fire Protection program performs a periodic visual inspection of credited penetration seals, fire barrier walls, ceilings, and floors, including coating and wraps (raceway fire wrap and hatch covers), visual inspection and closure tests on fire dampers, and periodic visual condition inspections and functional tests of fire-rated doors to ensure that they can perform their closure, latching, and barrier function. The Fire Protection program performs visual inspection of lightning rods, mounting structures, and ground connections at least once every five years. The Fire Protection program performs a visual inspection on fire-rated doors to verify the integrity of door surfaces and for clearances. Visual inspections are performed to identify conditions of corrosion and mechanical damage in the CO_2 flow path. A functional test of the CO_2 fire suppression system is performed to verify CO_2 flow adequacy through piping and nozzles. System testing is also performed to functionally test, clean, and inspect fire and smoke dampers.

A1.13 FIRE WATER SYSTEM

The Fire Water System program manages loss of material due to corrosion, MIC, or biofouling for water-based fire protection systems. Internal and external inspections and tests of fire protection equipment are performed considering applicable National Fire Protection Association (NFPA) codes and standards. The fire water system is managed by performing routine preventive maintenance, inspections, and testing; operator rounds, performance monitoring, and reliance on the corrective action program; and system improvements to address aging and obsolescence issues.

The Fire Water System program conducts a water flow test through each open spray nozzle to verify that deluge systems provide full coverage of the equipment it

protects. Either periodic non-intrusive volumetric examinations or visual inspections will be performed on firewater piping. Non-intrusive volumetric examinations would detect loss of material due to corrosion, and would confirm wall thickness is within acceptable limits so that aging will be detected before the loss of intended function. Visual inspections would evaluate (1) wall thickness as it applies to avoidance of catastrophic failure, and (2) the inner diameter of the piping as it applies to the design flow of the fire protection system. The volumetric examination technique employed will be one that is generally accepted in the industry, such as ultrasonic or eddy current.

A1.14 FUEL OIL CHEMISTRY

The Fuel Oil Chemistry program manages loss of material on the internal surface of components in the emergency diesel fuel oil storage and transfer system, portable diesel driven fire pump fuel oil tanks, and portable caddy fuel oil tanks. The program includes (a) surveillance and monitoring procedures for maintaining fuel oil quality by controlling contaminants in accordance with applicable ASTM Standards, (b) periodic draining of water from fuel oil tanks, (c) visual inspection of internal surfaces during periodic draining and cleaning, (d) ultrasonic wall thickness measurements of the fuel oil tanks if there are indications of reduced cross sectional thickness found during the visual inspection, (e) sampling and analysis of new fuel oil before it is introduced into the fuel oil tanks, and (f) supplemental one-time inspections of a representative sample of components in systems that contain fuel oil by the One-Time Inspection program (A1.16).

A1.15 REACTOR VESSEL SURVEILLANCE

The Reactor Vessel Surveillance program manages loss of fracture toughness due to neutron embrittlement in reactor materials exposed to neutron fluence exceeding $1.0E^{17}$ n/cm2 (E>1.0 MeV). The program is consistent with ASTM E 185-70 and ASTM E 185-73 for Units 1 and 2, respectively. Capsules are periodically removed during the course of plant operating life. Neutron embrittlement is evaluated through surveillance capsule testing and evaluation, ex-vessel neutron fluence calculations, and monitoring of reactor vessel neutron fluence. The testing program and reporting conform to requirements of 10 CFR 50 Appendix H, *Reactor Vessel Material Surveillance Program Requirements*. Data resulting from the program is used to:

- Determine pressure-temperature limits, minimum temperature requirements, and end-of-life Charpy upper-shelf energy (C_V USE) in accordance with the requirements of 10 CFR 50 Appendix G, *Fracture Toughness Requirements*; and,

- Determine end-of-life RT_{PTS} values in accordance with 10 CFR 50.61, *Fracture Toughness Requirements for Protection Against Pressurized Thermal Shock*.

The Reactor Vessel Surveillance program provides guidance for removal and testing or storage of material specimen capsules. All capsules that have been withdrawn and tested were stored.

For Unit 1, the last capsule is expected to be withdrawn during the current operating term after it has accumulated a fluence equivalent to 60 years of operation. The remaining five standby capsules have low lead factors, will remain inside the vessel throughout the vessel lifetime, and will be available for future testing.

There are no capsules remaining in the Unit 2 vessel. All capsules were removed because high lead factors produced exposures comparable to the fluences expected at the end of the period of extended operation.

DCPP Units 1 and 2 currently use ex-vessel monitoring dosimetry, which consists of four gradient chains with activation foils outside the reactor vessel, which will be used to monitor the neutron fluence environment within the beltline region.

A1.16 ONE-TIME INSPECTION

The One-Time Inspection program conducts one-time inspections of plant system piping and components to verify the effectiveness of the Water Chemistry program (A1.2), Fuel Oil Chemistry program (A1.14), and Lubricating Oil Analysis program (A1.23). The aging effects to be evaluated by the One-Time Inspection program are loss of material, cracking, and reduction of heat transfer. The One-Time Inspection program determines non-destructive examination sample size for each material-environment group using an engineered sampling technique for each material-environment group based on criteria such as the longest service period, most severe operating conditions, lowest design margins, lowest or stagnant flow conditions, high flow conditions, and highest temperature. The One-Time Inspection program evaluates unacceptable inspection results using the corrective action program.

This new program will be implemented and completed during the 10-year period prior to the period of extended operation. Industry and plant-specific operating experience will be evaluated in the development and implementation of this program.

A1.17 SELECTIVE LEACHING OF MATERIALS

The Selective Leaching of Materials program manages the loss of material due to selective leaching for brass (copper alloy >15 percent zinc), aluminum-bronze (copper alloy >8 percent aluminum), and gray cast iron components within the scope of license renewal that are exposed to raw water, including condensation, and treated water.

The Selective Leaching of Materials program includes a one-time visual inspection and hardness measurement (where feasible based on form and configuration) or other industry-accepted mechanical inspection techniques of selected components that may be susceptible to selective leaching to determine whether loss of material due to selective leaching is occurring, and whether the process will affect the ability of the components to perform their intended functions for the period of extended operation. Follow up examinations or evaluations will be performed as required to ensure component functionality during the period of extended operation.

The Selective Leaching of Materials program is a new program and the inspections will be completed within the 10-year period prior to the period of extended operation.

A1.18 BURIED PIPING AND TANKS INSPECTION

The Buried Piping and Tanks Inspection program manages cracking, loss of material, and change in surface conditions of buried components in the auxiliary saltwater system, diesel generator fuel transfer system, fire protection system, and the makeup water system. Visual inspections monitor the condition of protective coatings and wrappings found on steel components and directly assess the surface condition of stainless steel and asbestos cement components with no protective coatings or wraps. Evidence of damaged wrapping or coating defects is an indicator of possible age-related degradation to the external surface of the components. The presence of discolorations, discontinuities in surface texture, cracking, crazing or loss of material of unwrapped stainless steel and asbestos cement components is an indicator of possible corrosion damage to the external surface of the components. The program includes opportunistic inspection of buried piping and tanks as they are excavated or on a planned basis if opportunistic inspections have not occurred.

The Buried Piping and Tanks Inspection program is a new program that will be implemented prior to the period of extended of operation. Within the 10-year period prior to entering the period of extended operation, opportunistic or planned inspections will be performed. Upon entering the period of extended operation planned inspections within 10 years will be required unless opportunistic inspections have occurred within this 10-year period.

A1.19 ONE-TIME INSPECTION OF ASME CODE CLASS 1 SMALL-BORE PIPING

The One-Time Inspection of ASME Code Class 1 Small-Bore Piping program manages cracking of ASME Code Class 1 piping less than or equal to 4 inches nominal pipe size. This program is implemented as part of the fourth interval of the DCPP Inservice Inspection (ISI) program.

For ASME Code Class 1 small-bore piping, the ISI program requires volumetric examinations on selected butt weld locations to detect cracking. Weld locations are selected based on the guidelines provided In EPRI TR-112657, *Revised Risk-Informed Inservice Inspection Evaluation Procedure*. Volumetric examinations are conducted in accordance with ASME Section XI with acceptance criteria from Paragraph IWB-3000 and IWB-2430. The One-Time Inspection of ASME Code Class 1 Small-Bore Piping program inspections will be completed and evaluated within 10 years prior to the period of extended operation.

A1.20 EXTERNAL SURFACES MONITORING PROGRAM

The External Surfaces Monitoring Program manages loss of material for external surfaces of steel, aluminum, and copper alloy components, and hardening and loss of strength for elastomers. The program is a visual monitoring program that includes those systems and components within the scope of license renewal that require external surfaces monitoring. When appropriate for the component configuration and material, physical manipulation of elastomers is used to augment visual inspections to confirm absence of hardening or loss of strength for elastomers. Personnel performing external surfaces monitoring inspection will be qualified in accordance with site controlled procedures and processes.

The External Surfaces Monitoring Program is a new program that will be implemented prior to the period of extended operation.

A1.21 FLUX THIMBLE TUBE INSPECTION

The Flux Thimble Tube Inspection program manages loss of material by performing wall thickness eddy current testing of all flux thimble tubes that form part of the reactor coolant system pressure boundary. The pressure boundary includes the length of the thimble tube inside the reactor vessel out to the seal fittings outside the reactor vessel. Eddy current testing is performed on the portion of the tubes inside the reactor vessel. The program implements the recommendations of NRC Bulletin 88-09, *Thimble Tube Thinning in Westinghouse Reactors*.

All flux thimble tubes are currently inspected during each refueling outage. Wall thickness measurements are trended and wear rates are calculated. If the current measured wear exceeds the acceptance criteria or the predicted wear (as a measure of percent through wall) for a given flux thimble tube is projected to exceed the established acceptance criteria for wall thickness prior to the next refueling outage, corrective actions are taken to reposition, cap, or replace the thimble tube. The inspection frequency may be adjusted based upon items such as operating experience and recommendations from the Westinghouse Owners Group.

A1.22 INSPECTION OF INTERNAL SURFACES IN MISCELLANEOUS PIPING AND DUCTING COMPONENTS

The Inspection of Internal Surfaces in Miscellaneous Piping and Ducting Components program manages cracking, loss of material, change in material properties and hardening - loss of strength of the internal surfaces of piping, piping components, ducting and other components that are not within the scope of other aging management programs. The program also addresses the management of aging internal surfaces of miscellaneous piping and ducting components that are inaccessible during both normal operations and refueling.

The Inspection of Internal Surfaces in Miscellaneous Piping and Ducting Components program uses the work control process to conduct and document inspections. The program performs visual inspections to detect aging effects that could result in a loss of component intended function. Visual inspections of internal surfaces of plant components are performed during the conduct of periodic maintenance, predictive maintenance, surveillance testing and corrective maintenance. Additionally, visual inspections may be augmented by physical manipulation to detect hardening and loss of strength of both internal and external surfaces of elastomers. The program also includes volumetric evaluation to detect stress corrosion cracking of the internal surfaces of stainless steel components exposed to diesel exhaust.

The Inspection of Internal Surfaces in Miscellaneous Piping and Ducting Components program is a new program that will be implemented prior to the period of extended operation.

A1.23 LUBRICATING OIL ANALYSIS

The Lubricating Oil Analysis program manages the quality of lubricating oil in mechanical systems within specified limits. The program provides for sampling and analysis to maintain lubricating oil contaminants, primarily water and particulates,

within acceptable limits. The program includes acceptance criteria based on vendor or industry guidelines. Additionally, ferrography may be performed on oil samples for trending of wear particle concentrations.

The One-Time Inspection program (A1.16) will be used to verify the effectiveness of the Lubricating Oil Analysis program.

A1.24 ELECTRICAL CABLES AND CONNECTIONS NOT SUBJECT TO 10 CFR 50.49 ENVIRONMENTAL QUALIFICATION REQUIREMENTS

The Electrical Cables and Connections Not Subject to 10 CFR 50.49 Environmental Qualification Requirements program manages aging effects of electrical cables and connections not subject to 10 CFR 50.49 environmental qualification (EQ) requirements. Aging effects of embrittlement, melting, cracking, swelling, surface contamination, or discoloration of cables, connections and terminal blocks not subject to 10 CFR 50.49 EQ requirements are evaluated to ensure that cables and connections will continue to perform their intended functions during the period of extended operation.

Cables/cable jackets, connections and terminal blocks within the scope of license renewal in accessible areas with an adverse localized environment are inspected. The inspections of cables, connectors and terminal blocks in accessible areas are representative, within reasonable assurance, of cables, connections and terminal blocks in inaccessible areas within adverse localized environments. At least once every 10 years, cables/cable jackets, connections, and terminal blocks within the scope of license renewal in accessible adverse localized environments are visually inspected for embrittlement, melting, cracking, swelling, surface contamination, or discoloration. The first inspection for license renewal will be completed prior to the period of extended operation.

The acceptance criterion for visual inspection of accessible non-EQ cable jacket, connection and terminal blocks insulating material is the absence of anomalous indications that are signs of degradation. Corrective actions for conditions that are adverse to quality are performed in accordance with the corrective action program as part of the QA program.

The Electrical Cables and Connections Not Subject to 10 CFR 50.49 Environmental Qualification Requirements program is a new program that will be implemented prior to the period of extended operation. Industry and plant-specific operating

experience will be evaluated in the development and implementation of this program.

A1.25 ELECTRICAL CABLES AND CONNECTIONS NOT SUBJECT TO 10 CFR 50.49 ENVIRONMENTAL QUALIFICATION REQUIREMENTS USED IN INSTRUMENTATION CIRCUITS

The scope of the Electrical Cable and Connections Not Subject to 10 CFR 50.49 Environmental Qualification Requirements Used in Instrumentation Circuits program includes the cables and connections used in instrumentation circuits with sensitive, high voltage low-level signals within the nuclear instrumentation and radiation monitoring systems.

This program provides reasonable assurance that the intended function of cables and connections used in instrumentation circuits with sensitive, high voltage, low-level signals that are not subject to the environmental qualification requirements of 10 CFR 50.49 and are exposed to adverse localized environments caused by heat, radiation, or moisture are maintained consistent with the current licensing basis through the period of extended operation. In most areas, the actual ambient environments (e.g., temperature, radiation, or moisture) are less severe than the plant design environment for those areas.

Calibration surveillance tests are used to manage the aging of the cable insulation and connections for radiation monitors so that circuits perform their intended functions. A review of the calibration results will be completed prior to the period of extended operation and every 10 years thereafter.

Cable testing is used to manage the aging of the cable insulation for the nuclear instrumentation system. Cable tests such as insulation resistance testing or other tests are performed for detecting deterioration of the cable insulation system. The cable will be tested prior to the period of extended operation and every 10 years thereafter. Acceptance criteria will be determined prior to testing based on the type of cable and type of test performed.

If an instrument or monitor fails to meet acceptance criteria during routine testing or calibration, an engineering evaluation will be performed, including consideration of aging effects. The evaluation will determine what, if any, additional troubleshooting will be performed on the loop to identify and resolve the cause of the failure. The troubleshooting includes the instrumentation cable and connections, as appropriate.

A1.26 INACCESSIBLE MEDIUM VOLTAGE CABLES NOT SUBJECT TO 10 CFR 50.49 ENVIRONMENTAL QUALIFICATION REQUIREMENTS

The Inaccessible Medium Voltage Cables Not Subject to 10 CFR 50.49 Environmental Qualification Requirements program manages the aging effects of inaccessible medium voltage cables within the scope of license renewal located in conduit, duct banks, and pull boxes exposed to adverse localized environments caused by significant moisture simultaneously with significant voltage.

Cable pull boxes with a potential for water intrusion that contain in-scope non-EQ inaccessible medium voltage cables are inspected for water collection. Collected water is removed as required. This inspection and water removal is performed based on actual plant experience with an inspection frequency of at least every two years. Inspection for water collection within the cable pull boxes is performed based on plant experience with water accumulation.

The program provides for testing of in-scope non-EQ inaccessible medium voltage cables to provide an indication of the conductor insulation condition. At least once every 10 years, a polarization index test as described in EPRI TR-103834-P1-2, *Effects of Moisture on the Life of Power Plant Cables* or other testing that is state-of-the-art at the time of the testing is performed. The first test will be completed prior to the period of extended operation.

A1.27 ASME SECTION XI, SUBSECTION IWE

The ASME Section XI, Subsection IWE program manages loss of material and loss of sealing: leakage through containment and provides aging management of the steel liner of the concrete containment building, including the containment liner plate and its integral attachments, containment hatches and airlocks, and pressure-retaining bolting. IWE inspections are performed in order to identify and manage any containment liner aging effects that could result in loss of intended function. Acceptance criteria for components subject to Subsection IWE exam requirements are specified in Article IWE-3000. The DCPP CISI program meets the requirements of 2001 Edition of ASME Section XI, Subsection IWE (with the 2002 and 2003 addenda). In conformance with 10 CFR 50.55a(g)(4)(ii), the ASME Section XI, Subsection IWE program will be updated during each successive 120-month inspection interval to comply with the requirements of the latest edition and addenda of the Code specified 12 months before the start of the inspection interval.

A1.28 ASME SECTION XI, SUBSECTION IWL

The ASME Section XI, Subsection IWL program manages cracking due to expansion, loss of bond, and loss of material (spalling, scaling), increase in porosity and permeability, increase in porosity, permeability and cracking and provides aging management of the concrete containment building, which is conventionally reinforced. The primary inspection method is a general visual examination. The design does not include post-tensioned tendons. Inspections are performed in order to identify and manage any aging effects of the containment concrete that could result in loss of intended function. In conformance with 10 CFR 50.55a(g)(4)(ii), the ASME Section XI, Subsection IWL program will be updated during each successive 120-month inspection interval to comply with the requirements of the latest edition and addenda of the Code specified 12 months before the start of the inspection interval.

A1.29 ASME SECTION XI, SUBSECTION IWF

The ASME Section XI, Subsection IWF program manages cracking, loss of material, or loss of mechanical function that could result in loss of intended function for Class 1, 2, and 3 component supports. There are no Class MC supports at DCPP. In conformance with 10 CFR 50.55a(g)(4)(ii), the ASME Section XI, Subsection IWF program is updated during each successive 120-month inspection interval to comply with the requirements of the latest edition and addenda of the Code specified 12 months before the start of the inspection interval.

A1.30 10 CFR PART 50, APPENDIX J

The 10 CFR Part 50, Appendix J program manages loss of material, loss of leak tightness, and loss of sealing. The program monitors leakage rates through the containment pressure boundary, including the penetrations and access openings, in order to detect degradation of the containment pressure boundary. Seals, gaskets, and bolted connections are also monitored under the program.

Containment leakage rate tests are performed in accordance with 10 CFR Part 50, Appendix J, *Primary Reactor Containment Leakage Testing for Water-Cooled Power Reactors*, Option B; Regulatory Guide 1.163, *Performance-Based Containment Leak-Testing Program*; NEI 94-01, *Industry Guideline for Implementing Performance-Based Option of 10 CFR Part 50, Appendix J;* and ANSI/ANS 56.8-1994, *Containment System Leakage Testing Requirements*.

Containment leak rate tests are performed to assure that leakage through the primary containment, and systems and components penetrating primary containment, does not exceed allowable leakage limits specified in the DCPP Technical Specifications. Corrective actions are taken if leakage rates exceed established administrative limits for individual penetrations or the overall containment pressure boundary.

A1.31 MASONRY WALL PROGRAM

The Masonry Wall Program, which is part of the DCPP Structures Monitoring Program, manages cracking of masonry walls, and structural steel restraint systems of the masonry walls, within scope of license renewal based on guidance provided in NRC Bulletin 80-11, *Masonry Wall Design* and NRC Information Notice 87-67, *Lessons Learned from Regional Inspections of Licensee Actions in Response to NRC IE Bulletin 80-11*. The Masonry Wall Program contains inspection guidelines and lists attributes that cause aging of masonry walls, which are to be monitored during structural monitoring inspections, as well as establishes examination criteria, evaluation requirements, and acceptance criteria.

A1.32 STRUCTURES MONITORING PROGRAM

The Structures Monitoring Program manages cracking, loss of material, and change in material properties by monitoring the condition of structures and structural supports that are within the scope of license renewal. The Structures Monitoring Program implements the requirements of 10 CFR 50.65, *the Maintenance Rule*, and is consistent with the guidance of NUMARC 93-01, *Industry Guidelines for Monitoring the Effectiveness of Maintenance at Nuclear Power Plants*, Revision 2 and Regulatory Guide 1.160, *Monitoring the Effectiveness of Maintenance at Nuclear Power Plants,* Revision 2. Inspection methods, inspection frequency and inspector qualifications are in accordance with DCPP procedures that reference ACI 349.3R-96 and ASCE 11-90.

The Structures Monitoring Program provides inspection guidelines for concrete elements, structural steel, structural features (e.g. caulking, sealants, roofs, etc.), and miscellaneous components such as doors. The Structures Monitoring Program includes all masonry walls and water-control structures within the scope of license renewal and inspects supports for equipment, piping, conduit, cable tray, HVAC, and instrument components.

A1.33 RG 1.127, INSPECTION OF WATER-CONTROL STRUCTURES ASSOCIATED WITH NUCLEAR POWER PLANTS

The RG 1.127, Inspection of Water-Control Structures Associated with Nuclear Power Plants program, which is implemented as part of the Structures Monitoring Program, manages cracking, loss of material, loss of form, loss of bond, loss of strength, and increase in porosity and permeability due to extreme environmental conditions and the effects of natural phenomena. DCPP is not committed to Regulatory Guide 1.127 as part of the current licensing basis.

The RG 1.127, Inspection of Water-Control Structures Associated with Nuclear Power Plants program includes inspection and surveillance activities for the in-scope water-control structures associated with emergency cooling water systems.

A1.34 FUSE HOLDERS

The Fuse Holders program manages thermal fatigue, mechanical fatigue, vibration, chemical contamination, and corrosion of the metallic portions of fuse holders to ensure that fuse holders within the scope of license renewal are capable of performing their intended function.

The fuse holders that perform a license renewal intended function located outside of active devices are tested for deterioration of the metallic clamps using thermography. These fuse holders will be tested at least once every 10 years. The first test will be completed prior to the period of extended operation. The acceptance criteria for thermography testing will be based on the temperature rise above the reference temperature. The reference temperature will be ambient temperatures or the baseline temperature data from the same type of connections being tested.

The Fuse Holder program is a new program that will be implemented prior to the period of extended operation. Industry and plant-specific operating experience will be evaluated in the development and implementation of this program.

A1.35 ELECTRICAL CABLE CONNECTIONS NOT SUBJECT TO 10 CFR 50.49 ENVIRONMENTAL QUALIFICATION REQUIREMENTS

The Electrical Cable Connections Not Subject to 10 CFR 50.49 Environmental Qualification Requirements program manages the effects of loosening of bolted

external connections due to thermal cycling, ohmic heating, electrical transients, vibration, chemical contamination, corrosion, and oxidation. As part of the DCPP predictive maintenance program, infrared thermography testing is being performed on non-EQ electrical cable connections associated with active and passive components within the scope of license renewal. A representative sample will be tested prior to the period of extended operation using infrared thermography to confirm that there are no aging effects requiring management during the period of extended operations. If thermography inspection is not possible or if results are inconclusive, the connection integrity can be confirmed by another acceptable connection integrity test method, such as contact resistance measurement. The selected sample is based upon application (medium and low voltage), circuit loading (high load), and environment. Industry and plant-specific operating experience will be evaluated in the development and implementation of this program.

A1.36 METAL ENCLOSED BUS

The Metal Enclosed Bus program manages the effects of loose connections, embrittlement, cracking, melting, swelling, or discoloration of insulation, loss of material of bus enclosure assemblies, hardening of boots and gaskets, and cracking of internal bus supports to ensure that metal enclosed buses within the scope of license renewal.

Prior to the period of extended operation and every 10 years thereafter, internal portions of the MEBs are visually inspected for cracks, corrosion, foreign debris, excessive dust buildup, and evidence of water intrusion, bus insulation is inspected for signs of embrittlement, cracking, melting, swelling, hardening or discoloration, the internal bus supports are inspected for structural integrity and signs of cracks, and the bus enclosure assemblies are inspected for loss of material due to corrosion and hardening of boots and gaskets.

Prior to the period of extended operation and every 10 years thereafter, a sample of the accessible bolted connections on the internal bus work is checked for loose connections by measuring connection resistance or thermography. Where the alternative visual inspection is used to check bolted connections, the first inspection will be completed prior to the period of extended operation and every five years thereafter.

When contact resistance test or thermography is not performed, a visual inspection of connection insulation material to detect surface anomalies, such as discoloration, cracking, chipping or surface contamination will be performed. The first visual inspection for license renewal will be performed prior to the period of extended operation and once every five years thereafter.

A1.37 NICKEL-ALLOY AGING MANAGEMENT PROGRAM

The Nickel-Alloy Aging Management Program manages cracking due to primary water stress corrosion cracking in all plant reactor coolant system pressure boundary locations that contain Alloy 600. Aging management requirements for nickel-alloy penetration nozzles welded to the upper reactor vessel closure head noted in the Nickel-Alloy Penetration Nozzles Welded to the Upper Reactor Vessel Closure Heads of Pressurized Water Reactors program (A1.5) are also included in this program.

The Nickel-Alloy Aging Management Program uses inspections, mitigation techniques, repair/replace activities and monitoring of operating experience to manage the aging of Alloy 600 at DCPP. Detection of indications is accomplished through a variety of examinations consistent with ASME Section XI Subsections IWB, ASME Code Case N-729-1, ASME Code Case N-722, and EPRI Report 1010087 (MRP-139) issued under NEI 03-08 protocol. Mitigation techniques are implemented when appropriate to preemptively remove conditions that contribute to primary water stress corrosion cracking. Repair/replacement activities are performed to proactively remove or overlay Alloy 600 material, or as a corrective measure in response to an unacceptable flaw. Mitigation and repair/replace activities are consistent with those detailed in EPRI Report 1010087 (MRP-139).

A1.38 TRANSMISSION CONDUCTOR, CONNECTIONS, INSULATORS AND SWITCHYARD BUS AND CONNECTIONS

The Transmission Conductor, Connections, Insulators and Switchyard Bus and Connections aging management program manages the aging effects of the 230 kV and 500 kV components required for station blackout recovery which include transmission conductors and connections, insulators, and switchyard bus and connections to ensure that these components are capable of performing their intended functions throughout the period of extended operation.

Infrared thermography inspection of transmission and bus connections for indications of loose or degraded connections, inspection of transmission conductors for corrosion and fatigue, inspection of switchyard buses for cracking and corrosion, inspection of high voltage insulators for contamination and inspection of insulator supports for corrosion and wear will be conducted annually. The results of the inspections will be documented providing the ability to predict the extent of future degradation. The first inspection for license renewal will be completed prior to the period of extended operation.

A1.39 THERMAL AGING EMBRITTLEMENT OF CAST AUSTENITIC STAINLESS STEEL

The Thermal Aging Embrittlement of Cast Austenitic Stainless Steel (CASS) program manages embrittlement of susceptible CASS components due to thermal aging. The program will be used to determine the susceptibility of CASS components to thermal aging embrittlement based on casting method, molybdenum content, and percent ferrite. For "potentially susceptible" components, aging management is accomplished through an examination that will be demonstrated to be adequate for CASS inspection in accordance with criteria identified in ASME Section XI, Appendix VIII, or a component-specific flaw tolerance evaluation. Additional inspection or evaluations to demonstrate that the material has adequate fracture toughness will not be required for components that have been determined to be not susceptible to thermal aging embrittlement.

The Thermal Aging Embrittlement of Cast Austenitic Stainless Steel program is a new program and will be implemented as part of the Section XI ISI program. The required inspections will be completed within the 10-year period prior to the period of extended operation.

A2 SUMMARY DESCRIPTIONS OF TIME-LIMITED AGING ANALYSIS AGING MANAGEMENT PROGRAMS

A2.1 METAL FATIGUE OF REACTOR COOLANT PRESSURE BOUNDARY

The Metal Fatigue of Reactor Coolant Pressure Boundary program manages fatigue cracking caused by anticipated cyclic strains in metal components of the reactor coolant pressure boundary. The program will ensure that actual plant experience remains bounded by the transients assumed in the design calculations, or that appropriate corrective measures maintain the design and licensing basis by other acceptable means. The Metal Fatigue of Reactor Coolant Pressure Boundary program will track the number of transient cycles and will track cumulative fatigue usage at monitored locations. If a cycle count or cumulative fatigue usage value increases to an action limit, corrective actions will be initiated to evaluate the design limits and determine appropriate specific corrective actions. Action limits permit completion of corrective actions before the design basis number of events is exceeded.

A2.2 ENVIRONMENTAL QUALIFICATION (EQ) OF ELECTRICAL COMPONENTS

The Environmental Qualification (EQ) of Electrical Components program manages component thermal, radiation, and cyclical aging through the use of aging evaluations based on 10 CFR 50.49(f) qualification methods. As required by 10 CFR 50.49, EQ components not qualified for the current license term are to be refurbished or replaced, or have their qualification extended prior to reaching the aging limits established in the evaluation. Reanalysis is an acceptable alternative for extending the qualified life of an EQ component. Important attributes of a reanalysis include analytical methods, data collection and reduction methods, underlying assumptions, acceptance criteria, and corrective actions (if acceptance criteria are not met). The Environmental Qualification (EQ) of Electrical Components program complies with the requirements of 10 CFR 50.49 and NUREG-0588, *Interim Staff Position on Environmental Qualification of Safety-Related Electrical Equipment*. The Environmental Qualification (EQ) of Electrical Components Program is not committed to Regulatory Guide 1.89, *Environmental Qualification of Certain Electric Equipment Important to Safety for Nuclear Power Plants*, Revision 1. New (i.e., non-replacement) equipment that is required to be qualified, and that was installed after February 22, 1983, is required to be qualified to the level of IEEE 323-1974 and

NUREG-0588 Category I. Although there are no DCPP regulatory commitments to do so, supplemental guidance of RG 1.89 Revision 1 is considered for qualification of new and replacement equipment installed since the promulgation of the Guide where there are no "sound reasons" (pursuant to 10 CFR 50.49(l)) for not upgrading the qualification of such equipment.

A3 EVALUATION SUMMARIES OF TIME-LIMITED AGING ANALYSES

10 CFR 54.21(c) requires that an applicant for a renewed license identify time-limited aging analyses (TLAAs) and evaluate them for the period of extended operation. The following TLAAs have been identified and evaluated for DCPP.

A3.1 REACTOR VESSEL NEUTRON EMBRITTLEMENT

The following calculations of neutron fluence and of its embrittlement effects are TLAAs affected by the extended life of the plant:

- Neutron Fluence Values
- Pressurized Thermal Shock (PTS)
- Charpy Upper-Shelf Energy (C_V USE)
- Pressure-Temperature (P-T) Limits
- Low Temperature Overpressure Protection (LTOP)

The Reactor Vessel Surveillance program is described in Section A1.15.

A3.1.1 Neutron Fluence Values

Loss of fracture toughness is an aging effect caused by the neutron embrittlement aging mechanism that results from prolonged exposure to neutron radiation. This process results in increased tensile strength and hardness of the material with reduced toughness. The rate of neutron exposure is defined as neutron flux, and the cumulative degree of exposure over time is defined as neutron fluence. As neutron embrittlement progresses, the toughness/temperature curve shifts down (lower fracture toughness as indicated by Charpy upper shelf energy or C_V USE), and the curve shifts to the right (brittle/ductile transition temperature increases). Neutron fluence projections are made in order to estimate the effect on these reactor vessel material properties at the end-of-license extended (EOLE). The basis for EOLE is assumed to be 54 effective full power years (EFPY) based on a lifetime capacity factor of 90 percent for 60 years.

The last capsule withdrawn and tested from Unit 1 was Capsule V at the end-of-cycle (EOC) 11, which yielded an exposure less than that expected at EOLE.

Capsule B will be withdrawn at 21.9 EFPY in order to capture enough fluence data for EOLE. The last remaining capsule withdrawn and tested from Unit 2 was Capsule V at EOC 9, which yielded an exposure comparable to that expected at EOLE.

The fluence values for EOLE were projected using ENDF/B-VI cross sections, and they comply with Regulatory Guide 1.190, *Calculational and Dosimetry Methods for Determining Pressure Vessel Neutron Fluence*.

The DCPP reactor vessel EOLE fluence projections account for use of lower-leakage cores, and the Unit 1 power uprate. The fluence projections were revised to quantify expected fluence at the end of the period of extended operation in accordance with 10 CFR 54.21(c)(1)(ii).

Neutron fluence will also be monitored and its effects managed for the period of extended operation by the DCPP Reactor Vessel Surveillance program, described in Section A1.15. The validity of these parameters and the analyses that depend upon them will therefore be managed to the end of the period of extended operation in accordance with 10 CFR 54.21(c)(1)(iii).

A3.1.2 Pressurized Thermal Shock

The most recent coupon examination results for both units show that the increase in RT_{NDT} in plate and weld materials are bounded by that predicted by Regulatory Guide 1.99, *Radiation Embrittlement of Reactor Vessel Materials*, Revision 2 for Units 1 and 2. The results demonstrate that the DCPP reactor vessel material ages consistently with Regulatory Guide 1.99 predictions, and provides a conservative means to satisfy the requirement of 10 CFR 50.61; thus providing assurance of the reactor vessel integrity.

Unit 1

Using Regulatory Guide 1.99 Position 1.1 methods, RT_{PTS} values were generated for beltline and extended beltline region materials, the upper shell plates and associated welds, of the Unit 1 reactor vessel for EOLE fluence values. The projected RT_{PTS} values for EOLE did not meet the 10 CFR 50.61 screening criteria for beltline and extended beltline materials.

The Unit 1 reactor vessel fluence will continue to be monitored as part of the DCPP Reactor Vessel Surveillance program, described in Section A1.15 and therefore will be managed to the end of the period of extended operation in accordance with 10 CFR 54.21(c)(1)(iii).

Unit 2

The RT_{PTS} values generated for beltline and extended beltline region materials, the upper shell plates and associated welds, of the Unit 2 reactor vessel for fluence values at EOLE meet the 10 CFR 50.61 screening criteria. The Unit 2 RT_{PTS} was projected to the end of the period of extended operation in accordance with 10 CFR 54.21(c)(1)(ii). RT_{PTS} remains within acceptable values for the period of extended operation.

A3.1.3 Charpy Upper-Shelf Energy

The most recent coupon examination results for both units show that the decline in Charpy upper-shelf energy (C_V USE) in plate and weld materials are bounded by that originally predicted by Regulatory Guide 1.99, *Radiation Embrittlement of Reactor Vessel Materials*, Revision 2. Thus, the results demonstrate that the DCPP reactor vessel material ages consistently with Regulatory Guide 1.99 predictions and provides a conservative means to satisfy the requirements of 10 CFR 50, Appendix G. This provides assurance of the reactor vessel integrity. The C_V USE values were revised with projections to the end of the period of extended operation in accordance with 10 CFR 54.21(c)(1)(ii). The re-evaluations demonstrated that the C_V USE in the limiting material of each unit will remain above the 10 CFR 50 Appendix G acceptance criteria of 50 ft-lbf for the period of extended operation.

The extended beltline materials were also evaluated to confirm they will not decrease below the 10 CFR 50, Appendix G criterion of 50 ft-lbf.

A3.1.4 Pressure-Temperature Limits

Pressure-temperature (P-T) limits are presented as curves in the Pressure Temperature Limits Report (PTLR). The provisions of 10 CFR 50, Appendix G, require DCPP to operate within the currently licensed P-T limit curves. These curves are required to be maintained and updated as necessary to maintain plant operation consistent with 10 CFR 50. The Reactor Vessel Surveillance program (A1.15) will maintain the P-T limit curves for the period of extended operation in accordance with 10 CFR 54.21(c)(1)(iii).

A3.1.5 Low Temperature Overpressure Protection

Low temperature overpressure protection (LTOP) is required by Technical Specifications and is provided by the cold overpressurization mitigation system (COMS). COMS setpoints produce operational constraints by limiting the pressure-temperature range available to the operator to heatup or cooldown the plant.

The COMS setpoints and temperature limits are established in the PTLR. The COMS setpoints and analyses will also be managed for the period of extended operation by the DCPP Reactor Vessel Surveillance program (A1.15) in accordance with 10 CFR 54.21(c)(1)(iii).

A3.2 METAL FATIGUE ANALYSIS

This section describes:

- ASME Section III Class A Fatigue Analysis of Vessels, Piping, and Components
- Fatigue Analysis of Reactor Pressure Vessel Internals
- Effects of the Reactor Coolant System Environment on Fatigue Life of Piping and Components (Generic Safety Issue 190)
- Assumed Thermal Cycle Count for Allowable Secondary Stress Range Reduction Factor in B31.1 and ASME Section III Class 2 and 3 Piping
- Fatigue Design and Analysis of Class IE Electrical Raceway Support Angle Fittings for Seismic Events

ASME Section III requires no fatigue analysis for Class 2 components however, design of the DCPP Class 2 components of the secondary sides of the replacement steam generators are supported by Class 1 fatigue analyses.

Basis of Fatigue Analysis

ASME Section III Class A (ASME Section III Class 1) design specifications define a set of static and transient load conditions for which components are to be designed. Although the DCPP operating licenses are for 40 years, the design specifications commonly state that the transient conditions are for a 50-year design life. The fatigue analyses themselves are based on the specified number of occurrences of each transient rather than on the design or licensed life. Based on engineering experience and judgment, the design number of occurrences of each transient for use in the fatigue analyses was specified to be somewhat larger than the number of occurrences expected during the 50-year design life of the plant. This provides a margin of safety and an allowance for future changes in design or operation that may affect system design transients.

Fatigue Management Program

The Metal Fatigue of Reactor Coolant Pressure Boundary program described in Section A2.1 ensures that actual plant experience remains bounded by the design assumptions and calculations reflected in the FSAR, or that appropriate reevaluation or other corrective action is initiated if an action limit is reached. Action limits permit

completion of corrective actions before the design basis number of events is exceeded and before the ASME Section III limit of 1.0 for the fatigue cumulative usage factor is reached.

A3.2.1 ASME Section III Class A Fatigue Analysis of Vessels, Piping, and Components

Fatigue analyses are performed for ASME Section III Division 1 Class A vessels, pumps, and components subject to Class A analyses. Class 1 fatigue analyses also support design of the Class 2 components of the secondary sides of the replacement steam generators. The Class 1 analyses have been updated to incorporate redefinitions of loads and design basis events, operating changes, and power uprate with steam generator replacement.

A3.2.1.1 Reactor Pressure Vessel, Nozzles, and Studs

The DCPP Unit 1 reactor pressure vessel is designed to ASME Code, Section III, 1965 Edition through the Winter 1966 Addenda. The DCPP Unit 2 reactor pressure vessel is designed to ASME Section III 1968 Edition.

Pressure-retaining and support components of the reactor pressure vessel are subject to an *ASME Boiler and Pressure Vessel Code* Section III fatigue analysis. This original fatigue analysis has been updated to incorporate redefinitions of loads and design basis events, operating changes, replacement steam generators, and minor modifications using the 50-year design basis number of transients.

The usage factors for all reactor pressure vessel components, with the exception of the RPV studs and core support pads, remain below 1.0 when projected to 60 years. All RPV components, with the exception of the RPV studs and core support pads, will be valid for the period of extended operation, in accordance with 10 CFR 54.21(c)(1)(i).

The Metal Fatigue of Reactor Coolant Pressure Boundary program described in Section A2.1 will ensure that the fatigue analyses for RPV studs and core support pads remain valid, or that appropriate reevaluation or other corrective measures maintain the design and licensing basis. Action limits will permit completion of corrective actions before the design basis number of events is exceeded, and before the cumulative usage factor exceeds the code limit of 1.0. Therefore, effects of fatigue in the reactor pressure vessel pressure boundary and its supports will be managed for the period of extended operation in accordance with 10 CFR 54.21(c)(1)(iii).

A3.2.1.2 Reactor Vessel Closure Heads and Associated Components

The reactor pressure boundary components associated with the reactor vessel closure head are the control rod drive mechanisms (CRDM) pressure housings, core exit thermocouple nozzle assemblies (CETNAs), thermocouple nozzles, and thermocouple columns. The Units 1 and 2 CRDMs pressure housings, the CETNAs, and the thermocouple nozzles will be replaced with the replacement reactor vessel closure heads (RRVCHs). The RRVCHs, CRDM pressure housings, CETNA, and thermocouple nozzles will be designed to ASME Code, Section III. The Unit 1 and 2 RRVCHs, CRDMs, CETNAs, and thermocouple nozzles will be analyzed for a 50-year design life, and therefore will remain valid for the period of extended operation in accordance with 10 CFR 54.21(c)(1)(i).

The only reactor pressure boundary components associated with the reactor vessel closure head that will not be replaced are the thermocouple columns. These components were designed to the ASME Code, Section III. The current fatigue analyses of the thermocouple column demonstrate a large margin to the code acceptance criterion of 1.0. The analyses of these components are therefore valid for the period of extended operation in accordance with 10 CFR 54.21(c)(1)(i).

A3.2.1.3 Reactor Coolant Pump Pressure Boundary Components

There are four Model 93A Reactor Coolant Pumps (RCPs) for each reactor (one pump per coolant loop). The RCP design reports demonstrate that the pressure components satisfy all the Class A requirements of the ASME Code, Section III, 1968 Edition through the Winter 1970 Addenda.

Thermal Barrier Flange and Main Flange Thermowell

Fatigue in the thermal barrier flange and main flange thermowell was shown to be negligible based on the low CUF and the high number of allowable cycles. Increasing the 40-year design life results from the generic stress reports by a factor of 1.5 to account for a 60-year design life would not change this determination. Therefore the fatigue analysis of the thermal barrier flange and main flange thermowell will remain valid for the period of extended operation in accordance with 10 CFR 54.21(c)(1)(i).

Hydraulic Nuts and Studs

Hydraulic nuts and studs were installed on Unit 1 RCP 1-2 in 2005. These components were analyzed with a 50-year design life, which will extend beyond the period of extended operation. Therefore the fatigue analyses for the hydraulic nuts

and studs will remain valid for the period of extended operation, in accordance with 10 CFR 54.21(c)(1)(i).

The Metal Fatigue of Reactor Coolant Pressure Boundary program described in Section A2.1 ensures that either the assumed numbers of design cycles or transient events used by the RCP design documents for the Locating Slot, Main Flange Bolts, and Seal Housing Penetrations and Bolts are not exceeded, or that appropriate re-evaluation or other corrective action is taken if a design basis number of events is approached. Action limits will permit completion of corrective actions before the design basis number of events is exceeded, and before the cumulative usage factor exceeds the code limit of 1.0. Effects of fatigue in the reactor coolant pump pressure boundaries will be managed for the period of extended operation in accordance with 10 CFR 54.21(c)(1)(iii).

A3.2.1.4 Pressurizer and Pressurizer Nozzles

The pressurizers and their integral support skirts are designed to ASME Section III, 1965 Edition, with Addenda through Summer of 1966, as ASME Section III Class A components.

Unit 2 Relief Valve Support Bracket

The analysis of the Unit 2 relief valve support bracket determined the partial usage factors due to loads required by the design specification and due to relief valve operation. Assuming an increase in usage factor due to design specification loads, proportional to the increase in licensed operating period, limits the fatigue usage available for relief valve operation. However the limiting number of valve operating cycles is far in excess of any expected in any foreseeable design life. The fatigue analysis of the Unit 2 relief valve support bracket is therefore valid for the period of extended operation in accordance with 10 CFR 54.21(c)(1)(i).

Pressurizer Subcomponents with Projected 60-Year Usage Factors Less Than 0.6

The projected 60-year fatigue usage factors of some pressurizer subcomponents remain significantly below 1.0 (i.e., do not exceed 0.6 when projected to 60 years). The analyses of these subcomponents are therefore valid for the period of extended operation in accordance with 10 CFR 54.21(c)(1)(i).

Lower Heads and Surge Nozzles

Revision of analyses for the lower heads and surge nozzle was required in order to evaluate effects of insurge-outsurge transients. The analyses of these

subcomponents were projected to the end of the period of extended operation in accordance with 10 CFR 54.21(c)(1)(ii).

Pressurizer Subcomponents with Projected 60-Year Usage Factors Greater Than 0.6

The projected 60-year fatigue usage factor of the Unit 1 spray nozzle exceeds 1.0. In addition, the Unit 2 spray nozzle, Unit 1 heater penetration, and Unit 2 fabricated upper head and shell have projected 60-year fatigue usage factors greater than 0.6. The Metal Fatigue of Reactor Coolant Pressure Boundary program described in Section A2.1 will ensure that the fatigue usage factors based on those transient events remain within the code limit of 1.0 for the period of extended operation, or that appropriate corrective measures maintain the design and licensing basis by other acceptable means. Action limits will permit completion of corrective actions before the design basis number of events is exceeded, and before the cumulative usage factor exceeds the code limit of 1.0. The effects of fatigue in these pressurizer subcomponents will be managed for the period of extended operation in accordance with 10 CFR 54.21(c)(1)(iii).

A3.2.1.5 Steam Generator ASME Section III Class 1, Class 2 Secondary Side, and Feedwater Nozzle Fatigue Analyses and Fatigue Qualification Tests

Replacement steam generators (RSGs) are installed at DCPP. The RSGs are designed and fabricated to the requirements of ASME Code Section III, 1998 Edition, through 2000 Addenda. The design specification classifies the primary side of each RSG as ASME Code Class 1, and the secondary side of each RSG as ASME Code Class 2. However, the entire pressure boundary of the component is designed and constructed in accordance with ASME Code Section III, Class 1 requirements. The Unit 1 and 2 RSG fatigue analyses and fatigue qualification tests use the 50-year design basis numbers of transients. The period from installation of the RSGs to the end of the 50-year design life extends beyond the period of extended operation, and therefore the fatigue analyses and tests are valid through the period of extended operation in accordance with 10 CFR 54.21(c)(1)(i).

A3.2.1.6 Bulletin 88-11 Revised Fatigue Analysis of the Pressurizer Surge Line for Thermal Cycling and Stratification

NRC Bulletin 88-11 requested that licensees establish and implement a program to confirm pressurizer surge line integrity in view of the occurrence of thermal stratification, and required them to inform the staff of the actions taken to resolve this issue.

The pressurizer surge line piping is designed and fabricated to ASA Standard B31.1 and installed in accordance with ASME Code, Section III, 1971. In response to NRC Bulletin 88-11, Westinghouse performed a plant-specific evaluation of DCPP pressurizer surge lines. It was concluded that the surge line piping and existing support system meet ASME Section III Code allowables. The maximum usage factor occurs at the reactor coolant loop (RCL) nozzle safe-end.

The Metal Fatigue of Reactor Coolant Pressure Boundary program described in Section A2.1 ensures that the calculated usage factor of the hot leg surge nozzle safe-end is not exceeded during the period of extended operation; or that appropriate revisions to analyses occur. Action limits will permit completion of corrective actions before the cumulative usage factor exceeds the code limit of 1.0. Fatigue in the pressurizer surge line due to thermal stratification will be managed for the period of extended operation in accordance with 10 CFR 54.21(c)(1)(iii).

A3.2.1.7 TLAAs in Fatigue Crack Growth Assessments and Fracture Mechanics Stability Analyses for Leak-Before-Break Elimination of Dynamic Effects of Primary Loop Piping Failures

The leak-before-break (LBB) analysis was performed for DCPP to evaluate postulated flaw growth in the primary loop piping of the RCS. This analysis considered the thermal aging of the cast austenitic stainless steel (CASS) piping for fracture mechanics and plant transients for fatigue crack growth over the operating life of the plant.

The LBB analysis determined that fatigue crack growth effects will be negligible. The basis for evaluation of fatigue crack growth effects in the LBB analysis will remain unchanged so long as the design basis number of transients remains unchanged. The design basis number of transients used in the LBB analysis will be managed for the period of extended operation by the Metal Fatigue of Reactor Coolant Pressure Boundary program described in Section A2.1. Action limits will permit completion of corrective actions before the design basis number of events is exceeded. These effects will be managed for the period of extended operation in accordance with 10 CFR 54.21(c)(1)(iii).

A3.2.2 Fatigue Analyses of the Reactor Pressure Vessel Internals

The reactor internal components are not ASME code components. The reactor internals were designed and built prior to the implementation of Subsection NG of the ASME Boiler and Pressure Vessel Code, Section III, for reactor vessel internals. Therefore, no plant-specific ASME Code stress report was written during the initial design. However, these components were designed to meet the intent of the 1971

Edition of Section III of the ASME Boiler and Pressure Vessel Code with addenda through the Winter 1971. The qualification of the reactor vessel internals was first performed on a generic basis. Some internal components were subsequently analyzed on a plant-specific basis to account for plant modifications.

The Metal Fatigue of Reactor Coolant Pressure Boundary program described in Section A2.1 monitors fatigue design transients for the period of extended operation and provides reasonable assurance that the fatigue in the reactor vessel internals will be managed for the period of extended operation in accordance with 10 CFR 54.21(c)(1)(iii).

A3.2.3 Effects of the Reactor Coolant System Environment on Fatigue Life of Piping and Components (Generic Safety Issue 190)

DCPP addressed Generic Safety Issue - 190 review requirements by assessing the environmental effect on fatigue at the NUREG/CR-6260 sample locations for older-vintage Westinghouse plants. NUREG/CR-6260 identifies seven sample locations for older-vintage Westinghouse plants:

- Reactor vessel shell and lower head
- Reactor vessel inlet nozzles
- Reactor vessel outlet nozzles
- Pressurizer surge line (hot leg nozzle safe end)
- Charging system nozzle
- Safety injection system nozzle
- Residual heat removal system piping.

The evaluation of fatigue effects in three of the NUREG/CR-6260 locations, reactor vessel shell to lower head junction, reactor vessel inlet nozzles, and RHR line tee, has demonstrated that the CUF values will remain sufficiently below 1.0 using the maximum applicable F_{en} values to validate them for the period of extended operation. If multiplied by 60/50 to account for the 60-year period of operation, these results do not exceed 0.6, providing a large margin to the code acceptance criterion of 1.0. The evaluation of fatigue effects in these locations has been validated and projected to the end of the period of extended operation in accordance with 10 CFR 54.21(c)(1)(i).

The Metal Fatigue of Reactor Coolant Pressure Boundary program described in Section A2.1 includes appropriate usage factor action limits to ensure that the usage factor including F_{en} at the remainder of these locations, except the hot leg surge nozzle, does not exceed 1.0 before an evaluation is completed and appropriate actions have been identified. Action limits will permit completion of corrective actions before the design basis number of events is exceeded, and before the cumulative usage factor exceeds the code limit of 1.0. Therefore, the effects of the reactor coolant environment on fatigue usage factors in the remaining locations will be managed for the period of extended operation in accordance with 10 CFR 54.21(c)(1)(iii).

Prior to the period of extended operation, DCPP will repair, replace, or augment the inservice inspection program for the hot leg surge nozzle to require ASME Section XI volumetric examination at regular intervals.

A3.2.4 Assumed Thermal Cycle Count for Allowable Secondary Stress Range Reduction Factor in ANSI B31.1 Piping

DCPP piping is designed to ANSI B31.1 1967 edition, including summer 1973 Addenda; and ANSI B31.7-1969 with 1970 Addenda, with the exception of the pressurizer surge line, reactor coolant loop, and some firewater piping. The pressurizer surge line and reactor coolant loop were designed to ANSI B31.1-1955 and subsequently analyzed to address NRC Bulletin 88-11 and leak-before-break, respectively. The fire water piping designed in accordance with applicable NFPA Standards did not require a fatigue analysis.

Temperature screening criteria were used to identify components that might be subject to significant thermal fatigue effects for 60 years of operation, consistent with previous NRC-approved precedence. Normal and upset operating temperatures less than 220°F in carbon steel components, or 270°F in stainless steel, will not produce significant thermal stresses, and will not therefore produce significant fatigue effects of significant geometric stress intensification factors or significant residual stresses. DCPP conducted a systematic evaluation of plant piping systems and found that in all cases subject to significant thermal stress, the expected number of equivalent full-range thermal cycles for DCPP B31.1 and B31.7 piping should be less than a fraction of the 7,000-cycle threshold for which a stress range reduction factor is required in the applicable piping codes. Therefore, the existing analyses of ANSI B31.1 and B31.7 piping for which the allowable range of secondary stresses depends on the number of assumed thermal cycles and that are within the scope of license renewal are valid for the period of extended operation in accordance with 10 CFR 54.21(c)(1)(i).

A3.2.5 Fatigue Design and Analysis of Class IE Electrical Raceway Support Angle Fittings for Seismic Events

The DCPP Class IE raceway systems (safety-related) consist of conduits, cable trays, and pull boxes, and supports.

The raceway supports are required to withstand loads from the more severe of the design earthquake (DE), double design earthquake (DDE) or Hosgri earthquake (HE).

There have been no occurrences of a DE, DDE, or HE seismic event at DCPP during the first 20 plus years of operation. Therefore, the seismic fatigue qualification of Class IE electrical support angle fittings for the original design basis number of DE, DDE, and HE events is sufficient to the end of the period of extended operation. Therefore, the analysis is valid for the period of extended operation in accordance with 10 CFR 54.21(c)(1)(i).

A3.3 ENVIRONMENTAL QUALIFICATION OF ELECTRIC EQUIPMENT

The DCPP Environmental Qualification (EQ) program is consistent with the requirements of 10 CFR 50.49, and the guidance of NUREG-0588, Category II. 10 CFR 50.49 specifically requires that an EQ program be established to demonstrate that certain electrical components located in harsh plant environments are qualified to perform their safety function in those harsh environments after the effects of in-service aging. Harsh environments are defined as those areas of the plant that could be subject to the harsh environment effects of loss-of-coolant accident (LOCA), high energy line break (HELB), or post-LOCA radiation. 10 CFR 50.49 requires that the effects of significant aging mechanisms be addressed as part of environmental qualification.

A master list of qualified equipment is identified in a controlled plant information database. The database is comprised of specific EQ data fields along with a controlled drawing. Dedicated EQ files have been established to document the environmental qualification of equipment based on the results of testing and analyses. The EQ files include qualification summaries, test reports, applicable correspondence, local environments, and information that associate the installed equipment with the qualification documents. The environments used for equipment environmental qualification are specified in controlled documents.

Exemptions

Although there are no DCPP regulatory commitments to do so, supplemental guidance of RG 1.89 Revision 1 is considered for qualification of new and replacement equipment installed since the promulgation of the Guide where there are no “sound reasons” for not upgrading the qualification of such equipment.

The EQ program manages applicable component thermal, radiation, and cyclic aging effects through the aging evaluations based on 10 CFR 50.49 for the current operating license, using methods of demonstrating qualification for aging and accident conditions established by 10 CFR 50.49(f). Reanalysis of an aging evaluation to extend the qualification of components under 10 CFR 50.49(f) is performed on a routine basis as part of the EQ program. Maintaining qualification through the period of extended operation requires that the existing EQ evaluations (EQ files) be re-evaluated. For those components that are nearing the end of their qualified service life, the EQ Program has provisions for the components to be re-evaluated for longer service, refurbished, requalified, or replaced.

The DCPP Environmental Qualification (EQ) of Electrical Components program described in Section A2.2 will be continued through the period of extended operation. Continuing the EQ program provides reasonable assurance that the aging effects will be managed and that the EQ components will continue to perform their intended functions for the period of extended operation in accordance with 10 CFR 54.21(c)(1)(iii).

A3.4 CONTAINMENT CONCRETE, LINER, AND PENETRATIONS

At DCPP, the only components of the containment pressure boundary that are designed for a specific number of load cycles in a design lifetime are the airlocks, hatches, penetration sleeves, and the flued heads. The remaining components were designed to stress limit criteria, independent of the number of load cycles, and with no fatigue analyses.

A3.4.1 Design Cycles for Containment Penetrations

DCPP containment penetrations, air locks, and hatches all form part of the containment pressure boundary. Piping typically attaches to the penetration sleeves through flued heads. The flued heads were designed to the MC requirements of the ASME Section III, Subsection NE, 1971 Edition. The flued heads form part of the containment pressure boundary. Paragraph N-1314(e) of the Class B requirements states that “Any portion of the containment structure which does not satisfy the provisions of N-415.1 shall be evaluated by and satisfy the provisions of N-415.2 and N-416.”

Airlocks, Hatches, Containment Penetration Sleeves and End Plates

The containment penetration sleeves, airlocks, hatches, and end plates are designed to the Class B requirements of Section III, ASME Boiler and Pressure Vessel Code, 1968 Edition, including Addenda through Summer 1968. These calculations do not specifically address fatigue.

To address the issue of fatigue in the containment penetration sleeves, airlocks, hatches, and end plates during the period of extended operation DCPP evaluated the containment penetration sleeves, airlocks, hatches, and end plates for metal fatigue on the basis of the applicable ASME Section III, 1968 design code. The analysis was performed using the transients consistent with the Metal Fatigue of Reactor Coolant Pressure Boundary program, described in Section A2.1, and therefore will be managed in accordance with 10 CFR 54.21(c)(1)(iii).

Flued Heads

The flued heads were evaluated using the MC requirements of Section III, ASME Boiler and Pressure Vessel Code, 1971 Edition. The number of transients, with the exception of the transient for the steam generator blowdown lines flued heads, will be monitored by the Metal Fatigue of Reactor Coolant Pressure Boundary program,

described in Section A2.1, and therefore will be managed in accordance with 10 CFR 54.21(c)(1)(iii).

The design specification required a unique number of design cycles for the steam generator blowdown line flued heads, which were evaluated with a fatigue analysis. DCPP expects to experience fewer cycles during 60 years of operation than was originally used in the design of the flued heads. Therefore the fatigue analysis for the steam generator blowdown line flued heads is valid for the period of extended operation in accordance with 10 CFR 54.21(c)(1)(i).

A3.5 PLANT-SPECIFIC TIME-LIMITED AGING ANALYSES

A3.5.1 Load Cycle Limits of Cranes to CMAA-70

All of the DCPP cranes within the scope of license renewal either have no limiting number of loading cycles, in which case no TLAA exists, or are designed for more load cycles than the maximum number expected for a 60-year period of operation. The crane designs are valid for the period of extended operation in accordance with 10 CFR 54.21(c)(1)(i).

A3.5.2 TLAAs Supporting Repair of Alloy 600 Materials

The Unit 2 pressurizer nozzle weld overlays were supported by fatigue crack growth analyses. These fatigue crack growth analyses were projected to the end of the period of extended operation, and are therefore valid for the period of extended operation in accordance with 10 CFR 54.21(c)(1)(i).

A3.5.3 Inservice Flaw Growth Analyses that Demonstrate Structural Stability for 40 Years

The ISI procedure states that a fracture mechanics analysis, in accordance with ASME Code, Section XI, Subsection IWB-3600, must be completed if flaw acceptance criterion is not met as outlined in the corresponding test procedure. These analyses depend on a specified number of operating years, and thus may be TLAAs.

Unit 2 RHR Piping Weld RB-119-11

In 2006, a circumferential flaw was identified in DCPP Unit 2 Weld RB-119-11 of the residual heat removal (RHR) system. The observed flaw did not meet the Section XI acceptance standards of Table IWB-3514-2. Consequently, the indication was evaluated per the guidelines of Section XI, IWB-3640. A conservative fatigue crack growth evaluation was performed to determine the adequacy of continued operation of the piping system. The analysis is based on operating for 40 years from the date the flaw was identified and will be valid beyond the end of the period of extended operation for Unit 2 in accordance with 10 CFR 54.21(c)(1)(i).

Unit 2 Auxiliary Feedwater Piping Line 567

DCPP identified a flaw indication in the Unit 2 auxiliary feedwater pumps recirculation header Line 567, that exceeds Section XI, Table IWB-3410-1 criteria.

The flaw has been accepted by analysis by meeting the allowable size criteria of IWB-3620 and IWB-3610.

The Metal Fatigue of Reactor Coolant Pressure Boundary program described in Section A2.1 monitors fatigue design transients including the transients assumed in the fatigue crack growth analyses and therefore will be managed for the period of extended operation in accordance with 10 CFR 54.21(c)(1)(iii).

Unit 1 RHR Piping Weld WIC-95

DCPP identified a weld flaw indication located in an ASME Class 2 portion of the Unit 1 residual heat removal injection Line 985 to hot legs 1 and 2 at weld WIC-95. The indication exceeded the Section XI, Table IWC-3410-1 criteria. The flaw has been accepted by analysis in accordance with IWB-3410.

The number of seismic cycles assumed in the analysis is sufficient for the period of extended operation. Therefore, the analysis is valid for the period of extended operation, in accordance with 10 CFR 54.21(c)(1)(i).

A4 LICENSE RENEWAL COMMITMENTS

Table A4-1 identifies proposed actions committed to by PG&E for Diablo Canyon Power Plants, Units 1 and 2, in its License Renewal Application. These and other actions are proposed regulatory commitments. This list will be revised as necessary in subsequent amendments to reflect changes resulting from NRC questions and PG&E responses. PG&E will utilize the DCPP commitment tracking system to track regulatory commitments.

Table A4-1 License Renewal Commitments

Item #	Commitment	LRA Section	Implementation Schedule
1	Enhance the Closed-Cycle Cooling Water program to: • Utilize inspections of the CCW supply isolation check valves to the reactor coolant pumps (valves CCW-1-585 and CCW-2-585) as a leading indicator of the condition of the interior of piping components otherwise inaccessible for visual inspection. This periodic internal inspection will detect loss of material and fouling. The inspections are scheduled to be performed for Unit 1 and for Unit 2 at least once every five years. Plant procedures will be enhanced to include the acceptance criteria.	B2.1.10	Prior to the period of extended operation
2	Enhance the Fire Protection program procedures to: • Include inspection of all fire rated doors listed in the DCPP Fire Hazards Analysis, and • Include qualification criteria for individuals performing inspections of fire dampers and fire doors.	B2.1.12	Prior to the period of extended operation

Table A4-1 License Renewal Commitments

Item #	Commitment	LRA Section	Implementation Schedule
3	Enhance the Fire Water System program: • Sprinkler heads in service for 50 years will be replaced or representative samples from one or more sample areas will be tested consistent with NFPA 25, *Inspection, Testing and Maintenance of Water-Based Fire Protection Systems* guidance. Test procedures will be repeated at 10-year intervals during the period of extended operation, for sprinkler heads that were not replaced prior to being in service for 50 years, to ensure that signs of degradation, such as corrosion, are detected prior to the loss of intended function, and • For either periodic, non-intrusive volumetric examinations, or visual inspections on firewater piping. Non-intrusive volumetric examinations would detect any loss of material due to corrosion to ensure that aging effects are managed, wall thickness is within acceptable limits and degradation would be detected before the loss of intended function. Visual inspections would evaluate (1) wall thickness as it applies to avoidance of catastrophic failure, and (2) the inner diameter of the piping as it applies to the design flow of the fire protection system. The volumetric examination technique employed will be one that is generally accepted in the industry, such as ultrasonic or eddy current, and • To state trending requirements.	B2.1.13	Prior to the period of extended operation

Table A4-1 License Renewal Commitments

Item #	Commitment	LRA Section	Implementation Schedule
4	Enhance the Fuel Oil Chemistry program to: • Include the periodic draining, cleaning, and visual inspection of the diesel generator day tanks, the portable diesel-driven fire pump fuel oil tanks, and portable caddy fuel oil tanks, and • Include sampling of the new fuel oil prior to introduction into the portable diesel-driven fire pump tanks and portable caddy fuel oil tanks, and • Provide for supplemental ultrasonic thickness measurements if there are indications of reduced cross sectional thickness found during the visual inspection of the diesel fuel oil storage tanks, diesel generator day tanks, portable diesel-driven fire pump fuel oil tanks, and portable caddy fuel oil tanks, and • State that trending of water and particulate levels is controlled in accordance with DCPP Technical Specifications and plant procedures for the diesel fuel oil storage tanks and the diesel generator day tanks, and • Include monitoring and trending of water and sediment levels of new fuel oil for the portable diesel driven fire pump fuel oil tank and portable caddy fuel oil tanks, and • State acceptance criteria for new fuel oil being introduced into the portable diesel driven fire pump fuel oil tanks or portable caddy fuel oil tanks.	B2.1.14	Prior to the period of extended operation
5	Implement the One-Time Inspection (OTI) program as described in LRA Section B2.1.16.	B2.1.16	During the 10 years prior to the period of extended operation.
6	Implement the Selective Leaching of Materials program as described in LRA Section B2.1.17.	B2.1.17	During the 10 years prior to the period of extended operation.
7	Implement the Buried Piping and Tanks Inspection program as described in LRA Section B2.1.18.	B2.1.18	During the 10 years prior to the period of extended operation.
8	Implement the External Surfaces Monitoring Program as described in LRA Section B2.1.20.	B2.1.20	Prior to the period of extended operation

Table A4-1 License Renewal Commitments

Item #	Commitment	LRA Section	Implementation Schedule
9	Implement the Inspection of Internal Surfaces in Miscellaneous Piping and Ducting Components program as described in LRA Section B2.1.22.	B2.1.22	Prior to the period of extended operation
10	Enhance the Lubricating Oil Analysis program to: • Developed a new procedure to govern the Lubricating Oil Analysis program testing, evaluation, and disposition for in scope equipment, and • Include procedural guidance for oil sampling and analysis for chemical and physical properties, and • Specify standard analyses that will be performed on oils in a new procedure, and • Include in a new procedure acceptance criteria for each of the lubricating oils commonly used on-site, including the oils associated with the equipment within the scope of the Lubricating Oil Analysis program. DCPP acceptance criteria for lubricating oil analysis will be derived from original equipment manufacturer (OEM) vendor manuals, industry guidance, and the advice of qualified offsite laboratories, and • Include trending in a new procedure, and • Address conditions where action limits are reached or exceeded.	B2.1.23	Prior to the period of extended operation
11	Implement the Electrical Cables and Connections Not Subject to 10 CFR 50.49 Environmental Qualification Requirements program as described in LRA Section B2.1.24.	B2.1.24	Prior to the period of extended operation
12	Enhance the Electrical Cable and Connections Not Subject to 10 CFR 50.49 Environmental Qualification Requirements Used in Instrumentation Circuits program to: • Identify license renewal scope and require an engineering evaluation of the calibration results when the loop fails to meet acceptance criteria.	B2.1.25	Prior to the period of extended operation
13	Enhance the Inaccessible Medium Voltage Cables Not Subject to 10 CFR 50.49 Environmental Qualification Requirements program to: • Implement the aging management program for testing of the medium voltage cables not subject to 10 CFR 50.49 EQ requirements and enhance the periodic inspections and removal of water from the cable pull boxes containing in scope medium voltage cables not subject to 10 CFR 50.49 EQ requirements.	B2.1.26	Prior to the period of extended operation

Table A4-1 License Renewal Commitments

Item #	Commitment	LRA Section	Implementation Schedule
14	Enhance the Structures Monitoring program procedures to: • Monitor groundwater samples every five years for pH, sulfates and chloride concentrations, including consideration for potential seasonal variations, and • Specify inspections of bar racks and associated structural components in the intake structure.	B2.1.32	Prior to the period of extended operation
15	Implement the Fuse Holders program as described in LRA Section B2.1.34.	B2.1.34	Prior to the period of extended operation
16	Implement the Electrical Cable Connections Not Subject to 10 CFR 50.49 Environmental Qualification Requirements program as described in LRA Section B2.1.35.	B2.1.35	Prior to the period of extended operation
17	Enhance the Metal Enclosed Bus program: • The existing bus work order inspection activities for inspection and testing of the MEBs will be proceduralized to include specific inspection scope, frequencies and actions to be taken when acceptance criteria are not met.	B2.1.36	Prior to the period of extended operation
18	Enhance the Transmission Conductor, Connections, Insulators and Switchyard Bus and Connections program procedures to: • Identify components required to support station blackout recovery which are in the scope of license renewal aging management. In the 230 kV switchyard, these are the components between the startup transformers and disconnects 217 and 219. In the 500 kV switchyard these are the components between the main transformers and switchyard breakers 532/632 in Unit 1 and 543/641 in Unit 2, and • Include gathering and reviewing completed maintenance and inspection results, by the plant staff, to identify adverse trends, and • Identify that an engineering evaluation will be conducted when a degraded condition is detected that considers the extent of the condition, reportability of the event, potential root causes, probably of recurrence, and the corrective actions required.	B2.1.38	Prior to the period of extended operation
19	Implement the Thermal Aging Embrittlement of Cast Austenitic Stainless Steel program as described in LRA Section B2.1.39.	B2.1.39	During the 10 years prior to the period of extended operation

Table A4-1 License Renewal Commitments

Item #	Commitment	LRA Section	Implementation Schedule
20	As additional Industry and applicable plant-specific operating experience become available, the operating experience will be evaluated and appropriately incorporated into the new programs through the DCPP Corrective Action and Operating Experience Programs. This ongoing review of operating experience will continue throughout the period of extended operation and the results will be maintained on site.	B2.1.16 B2.1.17 B2.1.18 B2.1.20 B2.1.22 B2.1.24 B2.1.34 B2.1.35 B2.1.39	Prior to the period of extended operation
21	Enhance the Metal Fatigue of Reactor Coolant Pressure Boundary program to: • Include additional locations which are not covered by the current Metal Fatigue of Reactor Coolant Pressure Boundary program. Additional locations will include the NUREG/CR-6260 locations for the effects of the reactor coolant environment on fatigue. Usage factors in the NUREG/CR-6260 sample locations will include the environmental factors, F(en), calculated by NUREG/CR-6583 and NUREG/CR-5704 or appropriate alternative methods, and • Include additional transients that contribute to fatigue usage, which are not covered by the current Metal Fatigue of Reactor Coolant Pressure Boundary program. Usage factors in the NUREG/CR-6260 sample locations will include the environmental factors, F(en), calculated by NUREG/CR-6583 and NUREG/CR-5704 or appropriate alternative methods, and	B3.1	Prior to the period of extended operation

Table A4-1 License Renewal Commitments

Item #	Commitment	LRA Section	Implementation Schedule
21 (Cont)	• Include additional cycle count and fatigue usage action limits, which will invoke appropriate corrective actions if a component approaches a cycle count action limit or a fatigue usage action limit. Action limits permit completion of corrective actions before the design limits are exceeded. Cycle Count Action Limits: An action limit initiates corrective action when the cycle count for any of the critical thermal or pressure transients is projected to reach the action limit defined in the program before the end of the next fuel cycle. In order to assure sufficient margin to accommodate occurrence of a low probability transient, corrective actions must be initiated before the remaining number of allowable cycles for any specified transient becomes less than one. Cumulative Fatigue Usage (CUF) Action Limits: An action limit requires corrective action when calculated cumulative usage factor (CUF) for any monitored location is projected to reach 1.0 within the next 3 fuel cycles, and • The procedures governing the DCPP Metal Fatigue of Reactor Coolant Pressure Boundary program will be enhanced to specify the frequency of periodic reviews of the results of the monitored cycle count and cumulative usage factor data at least once per fuel cycle. This review will compare the results against the corrective action limits to determine any approach to action limits and any necessary revisions to the fatigue analyses will be included in the corrective actions, and • The procedures governing the DCPP Metal Fatigue of Reactor Coolant Pressure Boundary program will be enhanced to include appropriate corrective actions to be invoked if a component approaches a cycle count action limit or a fatigue usage action limit. The corrective action options for a component that has exceeded action limits include a revised fatigue analysis or repair or replacement of the component.	B3.1	Prior to the period of extended operation

Table A4-1 License Renewal Commitments

Item #	Commitment	LRA Section	Implementation Schedule
22	PG&E will: A. For Reactor Coolant System Nickel-Alloy Pressure Boundary Components: (1) Implement applicable NRC Orders, Bulletins and Generic Letters associated with nickel-alloys; (2) implement staff-accepted industry guidelines, (3) participate in the industry initiatives, such as owners group programs and the EPRI Materials Reliability Program, for managing aging effects associated with nickel-alloys, and (4) upon completion of these programs, but not less than 24 months before entering the period of extended operation, PG&E will submit an inspection plan for reactor coolant system nickel-alloy pressure boundary components to the NRC for review and approval, and B. For Reactor Vessel Internals: (1) Participate in the industry programs for investigating and managing aging effects on reactor internals; (2) evaluate and implement the results of the industry programs as applicable to the reactor internals; and (3) upon completion of these programs, but not less than 24 months before entering the period of extended operation, PG&E will submit an inspection plan for reactor internals to the NRC for review and approval.	3.1 4.3.3	Concurrent with industry initiatives and upon completion submit an inspection plan and not less than 24 months before entering the period of extended operation.
23	DCPP will replace the current carbon steel with stainless steel clad CCP 1-1 and 2-2 pump casings in the CVCS with completely stainless steel pump casings.	3.3.2.2.14	Prior to the period of extended operation
24	PG&E will implement the revised PTS rule (10 CFR 50.61a). In the event that the provisions of 10 CFR 50.61(a) cannot be met, PG&E will implement alternate options, such as flux reduction, as provided in 10 CFR 50.61.	4.2.2 A3.1.2	At least 3 years prior to exceeding the PTS screening criterion of 10 CFR 50.61.
25	DCPP will re-evaluate the RCS Pressure-Temperature limits and COMS setpoints as necessary to comply with 10 CFR 50 Appendix G.	4.2.4 A3.1.4	Prior to operation beyond 23 EFPY
26	The missile shield hoist crane will be removed from containment during the replacement reactor vessel closure head (RRVCH) project. The Unit 2 RRVCH project was completed during the fifteenth refueling outage beginning October 2009 and Unit 1 RRVCH project is planned during the sixteenth refueling outage beginning October 2010.	4.7.1	Prior to the period of extended operation
27	DCPP will repair or replace the hot leg surge nozzle, or augment the inservice inspection program to require ASME Section XI volumetric examination at regular intervals.	4.3.4 A3.2.3	Prior to the period of extended operation.

Table A4-1 License Renewal Commitments

Item #	Commitment	LRA Section	Implementation Schedule
28	The Unit 1 reactor pressure vessel (RPV) head is planned to be replaced during the 16th refueling outage beginning October 2010 and the Unit 2 RPV head was replaced during the 15th refueling outage in October 2009. All components penetrating the new reactor vessel closure heads and welded to the inner surfaces of the reactor vessel closure heads including the head vent piping and elbows will be replaced with Alloy 690.	B2.1.5 B2.1.37 4.7.2	Prior to the period of extended operation
29	DCPP Unit 1 and 2 CRDM pressure housings, the core exit thermocouple nozzle assemblies (CETNAs), and the thermocouple nozzles will be replaced with the replacement reactor vessel closure heads (RRVCHs). The Unit 2 RPV head was replaced during the fifteenth refueling outage beginning October 2009 and Unit 1 RPV head is planned to be replaced during the sixteenth refueling outage beginning October 2010. The replacement components will be qualified through the period of extended operation.	4.3.2.2	Prior to the period of extended operation

APPENDIX B

AGING MANAGEMENT PROGRAMS

APPENDIX B - TABLE OF CONTENTS

B1 APPENDIX B INTRODUCTION B-1
B1.1 Overview B-1
B1.2 Method of Discussion B-2
B1.3 Quality Assurance Program and Administrative Controls B-3
B1.4 Operating Experience B-4
B1.5 Aging Management Programs B-5
B1.6 Time-Limited Aging Analysis Programs B-8
B2 AGING MANAGEMENT PROGRAMS B-9
B2.1 Aging Management Program Details B-14
B2.1.1 ASME Section XI Inservice Inspection, Subsections IWB, IWC, and IWD B-14
B2.1.2 Water Chemistry B-18
B2.1.3 Reactor Head Closure Studs B-24
B2.1.4 Boric Acid Corrosion B-27
B2.1.5 Nickel-Alloy Penetration Nozzles Welded To The Upper Reactor Vessel Closure Heads of Pressurized Water Reactors B-30
B2.1.6 Flow-Accelerated Corrosion B-33
B2.1.7 Bolting Integrity B-37
B2.1.8 Steam Generator Tube Integrity B-41
B2.1.9 Open-Cycle Cooling Water System B-44
B2.1.10 Closed-Cycle Cooling Water System B-47
B2.1.11 Inspection of Overhead Heavy Load and Light Load (Related to Refueling) Handling Systems B-54
B2.1.12 Fire Protection B-56
B2.1.13 Fire Water System B-61
B2.1.14 Fuel Oil Chemistry B-67
B2.1.15 Reactor Vessel Surveillance B-74
B2.1.16 One-Time Inspection B-77
B2.1.17 Selective Leaching of Materials B-80
B2.1.18 Buried Piping and Tanks Inspection B-82
B2.1.19 One-Time Inspection of ASME Code Class 1 Small-Bore Piping B-86
B2.1.20 External Surfaces Monitoring Program B-89
B2.1.21 Flux Thimble Tube Inspection B-93
B2.1.22 Inspection of Internal Surfaces in Miscellaneous Piping and Ducting Components B-95
B2.1.23 Lubricating Oil Analysis B-99
B2.1.24 Electrical Cables and Connections Not Subject To 10 CFR 50.49 Environmental Qualification Requirements B-103

B2.1.25 Electrical Cables and Connections Not Subject to 10 CFR 50.49 Environmental Qualification Requirements Used in Instrumentation Circuits B-106
B2.1.26 Inaccessible Medium Voltage Cables Not Subject to 10 CFR 50.49 Environmental Qualification Requirements B-109
B2.1.27 ASME Section XI, Subsection IWE B-112
B2.1.28 ASME Section XI, Subsection IWL B-116
B2.1.29 ASME Section XI, Subsection IWF B-119
B2.1.30 10 CFR Part 50, Appendix J B-122
B2.1.31 Masonry Wall Program B-125
B2.1.32 Structures Monitoring Program B-129
B2.1.33 RG 1.127, Inspection of Water-Control Structures Associated with Nuclear Power Plants B-134
B2.1.34 Fuse Holders B-138
B2.1.35 Electrical Cable Connections Not Subject to 10 CFR 50.49 Environmental Qualification Requirements B-141
B2.1.36 Metal Enclosed Bus B-145
B2.1.37 Nickel-Alloy Aging Management Program B-148
B2.1.38 Transmission Conductor, Connections, Insulators And Switchyard Bus And Connections B-156
B2.1.39 Thermal Aging Embrittlement of Cast Austenitic Stainless Steel (CASS) B-163
B3 TLAA SUPPORT ACTIVITIES B-165
B3.1 Metal Fatigue of Reactor Coolant Pressure Boundary B-165
B3.2 Environmental Qualification (EQ) of Electrical Components B-170

B1 APPENDIX B INTRODUCTION

B1.1 OVERVIEW

License renewal aging management program descriptions are provided in this appendix for each program credited for managing aging effects based upon the aging management review results provided in Sections 3.1 through 3.6 of this application.

Each aging management program described in this section has 10 elements that are consistent with the definitions in Section A.1, *Aging Management Review - Generic*, Table A.1-1, *Elements of an Aging Management Program for License Renewal*, of NUREG-1800, *Standard Review Plan for Review of License Renewal Applications for Nuclear Power Plants*. The 10 element detail is only provided when the program is plant-specific.

Each of the new or existing AMPs described in this appendix has been evaluated for consistency with the ten program-specific element discussions in the applicable program description in NUREG-1801, Chapters X or XI. This appendix summarizes the evaluation results for each program and indicates whether the program elements are consistent with, consistent with enhancements, or consistent with exceptions, to the corresponding program described in NUREG-1801.

Where the discussion states that a plant program is (or will be) consistent with the recommendations of NUREG-1801, takes no exceptions to NUREG-1801, and identifies no enhancements, such statements affirm that the plant program corresponds to and contains the elements of the referenced NUREG-1801 program; and the DCPP operating experience identified no unique, plant-specific operating experience in addition to that provided in NUREG-1801 for the subject program.

Where the discussion of an Aging Management Program states that the plant program will be consistent with the recommendations of NUREG-1801, takes no exceptions to NUREG-1801, but identifies enhancements, such statements affirm that with those enhancements the plant program corresponds to and contains the elements of the referenced NUREG-1801 program; and the DCPP operating experience identified no unique, plant-specific operating experience in addition to that provided in NUREG-1801 for the subject program.

Where the discussion of an Aging Management Program states that the plant program is (or will be) consistent with the recommendations of NUREG-1801 with exception(s), with or without enhancements, such statements affirm that with the

exclusion of the specific matters identified in each exception, the plant program corresponds to and contains the elements of the referenced NUREG-1801 program; and the DCPP operating experience identified no unique, plant-specific operating experience in addition to that provided in NUREG-1801 for the subject program. A justification for each identified exception is provided.

B1.2 METHOD OF DISCUSSION

For those aging management programs that are consistent with the assumptions made in Sections X and XI of NUREG-1801, or are consistent with exceptions, each program discussion is presented in the following format:

- A program description abstract of the overall program form and function is provided.
- A NUREG-1801 consistency statement is made about the program.
- Exceptions to the NUREG-1801 program are outlined and a justification is provided.
- Enhancements to ensure consistency with NUREG-1801 or additions to the NUREG-1801 program to manage aging for additional components with aging effects not assumed in NUREG-1801 for the NUREG-1801 program. A proposed schedule for completion is discussed.
- Operating experience information specific to the program is provided.
- A conclusion section provides a bases statement of reasonable assurance that the program is effective, or will be effective, once enhanced.

For those programs that are plant-specific, the above form is followed with the additional discussion of all 10 elements.

B1.3 QUALITY ASSURANCE PROGRAM AND ADMINISTRATIVE CONTROLS

The DCPP Quality Assurance Program implements the requirements of 10 CFR 50, Appendix B, *Quality Assurance Criteria for Nuclear Power Plants and Fuel Processing Plants*, and is consistent with the summary provided in Appendix A.2 of NUREG-1800 and Appendix, *Quality Assurance for Aging Management Programs*, of NUREG-1801. The DCPP QA Program includes the elements of corrective action, such as the confirmation process, and administrative controls, and is applicable to the safety-related and nonsafety-related systems, structures, and components that are subject to aging management activities. Those parts of the QA Program that apply to nonsafety-related systems, structures, and components are called graded QA programs because not all of the 18 criteria of 10 CFR 50, Appendix B, are applied to them. 10 CFR 50, Appendix B, Criterion 16, *Corrective Action* applies to all of the graded QA programs.

The program elements of Corrective Action, Confirmation Process, and Administrative Controls are applicable as follows:

Corrective Action

The Corrective Action Program is applied to safety-related and nonsafety-related SSCs at DCPP that are subject to aging management. Corrective action process procedures, review and approval processes, and administrative controls are implemented in accordance with the requirements of 10 CFR 50, Appendix B, *Quality Assurance Criteria for Nuclear Power Plants and Fuel Processing Plants*.

The corrective action procedures specify the methods to promptly report, evaluate, resolve, and prevent recurrence of problems, commensurate with the significance of the SSC or activity. The methods include, but are not limited to: (1) problem identification, (2) problem reporting, (3) immediate response, (4) investigative action to determine the cause, (5) evaluation of the extent of condition and extent of cause, (6) assessment of impact on operability and assessment for reportability, (7) determination of corrective action to prevent recurrence or minimize the consequences, and (8) the performance and verification of corrective actions.

Corrective action procedures also specify requirements for resolving problems that are significant conditions adverse to quality and must be prevented from recurring. These requirements include independent review and approval by the Corrective Action Review Board. In addition, the root cause of the significant condition adverse

to quality and the corrective actions implemented are documented and reported to appropriate levels of management.

Confirmation Process

The DCPP QA Program requires that measures be taken to preclude repetition of significant conditions adverse to quality for both safety-related and nonsafety-related SSCs that are subject to aging management. These measures include actions to verify effective implementation of corrective actions.

Plant procedures include provisions for timely evaluation of adverse conditions and implementation of corrective actions required, including root cause determinations and prevention of recurrence where appropriate (e.g., significant conditions adverse to quality). These procedures provide for tracking, coordinating, monitoring, reviewing, verifying, validating, approving corrective actions, and ensuring corrective actions have been effectively implemented.

The corrective action process is also monitored for potentially adverse trends. Identification of a potentially adverse trend due to recurring or repetitive unacceptable conditions will result in the initiation of a corrective action document.

Follow-up inspections required by the confirmation process are documented in accordance with the corrective action process. The same 10 CFR 50, Appendix B, corrective actions and confirmation process applies to nonconforming systems, structures, and components subject to aging management review.

Administrative Controls

DCPP administrative controls, as described in FSAR Section 17.2, include the DCPP organizational structure, responsibilities and authorities, and personnel qualification requirements. The DCPP administrative control program requires formal procedures and other forms of written instruction for the activities performed under the programs credited for aging management. These DCPP procedures contain objectives, program scope, responsibilities, methods for implementation, and acceptance criteria.

B1.4 OPERATING EXPERIENCE

Operating experience is used at DCPP to enhance plant programs, prevent repeat events, and prevent events that have occurred at other plants from occurring at DCPP. External nuclear industry operating experience is screened, evaluated, and acted on to prevent or mitigate the consequences of similar events. External

operating experience may include such things as INPO documents (e.g., SOERs, SERs, SENs, etc.), NRC documents (e.g., GLs, LERs, INs, etc.), and other documents (e.g., 10 CFR 21 Reports, NCRs, etc.). Internal operating experience may include such things as event investigations, trending reports, lessons learned from in-house events, self-assessments, and in the 10 CFR 50, Appendix B, corrective action process.

Each aging management program summary in this appendix contains a discussion of operating experience relevant to the program. This information was obtained through the review of in-house operating experience in the Corrective Action Program, program self-assessments, and program health reports, and the review of industry operating experience focused primarily on post-2005 information (industry operating experience prior to 2005 is addressed in Revision 1 to NUREG-1801). Plant-specific operating experience and applicable industry operating experience was obtained by a review of the DCPP corrective action program records for the period January 1997 through June 2009 to ensure that there was no unique, plant-specific operating experience in addition to that provided in NUREG-1801. This review was augmented with information from program engineers.

The applicable operating experience for each aging management program was reviewed and summarized in the Appendix B program summaries. Detailed records on the performance and effectiveness of each program are maintained in the DCPP records management system (including the corrective action program). The operating experience summary in each aging management program identifies past corrective actions and provides objective evidence that the effects of aging have been, and will continue to be, adequately managed so that the intended functions of the structures and components within the scope of each program will be maintained during the period of extended operation.

B1.5 AGING MANAGEMENT PROGRAMS

The following aging management programs are described in the sections listed in this appendix. The programs are either discussed in NUREG-1801 or are plant-specific.

- ASME Section XI In-service Inspection, Subsections IWB, IWC, and IWD (Section B2.1.1)
- Water Chemistry (Section B2.1.2)
- Reactor Head Closure Studs (Section B2.1.3)

- Boric Acid Corrosion (Section B2.1.4)
- Nickel-Alloy Penetration Nozzles Welded To The Upper Reactor Vessel Closure Heads of Pressurized Water Reactors (Section B2.1.5)
- Flow-Accelerated Corrosion (Section B2.1.6)
- Bolting Integrity (Section B2.1.7)
- Steam Generator Tube Integrity (Section B2.1.8)
- Open-Cycle Cooling Water System (Section B2.1.9)
- Closed-Cycle Cooling Water System (Section B2.1.10)
- Inspection of Overhead Heavy Load and Light Load (Related to Refueling) Handling Systems (Section B2.1.11)
- Fire Protection (Section B2.1.12)
- Fire Water System (Section B2.1.13)
- Fuel Oil Chemistry (Section B2.1.14)
- Reactor Vessel Surveillance (Section B2.1.15)
- One-Time Inspection (Section B2.1.16)
- Selective Leaching of Materials (Section B2.1.17)
- Buried Piping and Tanks Inspection (Section B2.1.18)
- One-Time Inspection of ASME Code Class 1 Small-Bore Piping (Section B2.1.19)
- External Surfaces Monitoring Program (Section B2.1.20)
- Flux Thimble Tube Inspection (Section B2.1.21)
- Inspection of Internal Surfaces in Miscellaneous Piping and Ducting Components (Section B2.1.22)
- Lubricating Oil Analysis (Section B2.1.23)

- Electrical Cables and Connections Not Subject to 10 CFR 50.49 Environmental Qualification Requirements (Section B2.1.24)
- Electrical Cables and Connections Not Subject to 10 CFR 50.49 Environmental Qualification Requirements Used in Instrumentation Circuits (Section B2.1.25)
- Inaccessible Medium Voltage Cables Not Subject to 10 CFR 50.49 Environmental Qualification Requirements (Section B2.1.26)
- ASME Section XI, Subsection IWE (Section B2.1.27)
- ASME Section XI, Subsection IWL (Section B2.1.28)
- ASME Section XI, Subsection IWF (Section B2.1.29)
- 10 CFR 50, Appendix J (Section B2.1.30)
- Masonry Wall Program (Section B2.1.31)
- Structures Monitoring Program (Section B2.1.32)
- RG 1.127, Inspection of Water-Control Structures Associated with Nuclear Power Plants (Section B2.1.33)
- Fuse Holders (Section B2.1.34)
- Electrical Cable Connections Not Subject to 10 CFR 50.49 Environmental Qualification Requirements (Section B2.1.35)
- Metal Enclosed Bus (Section B2.1.36)
- Nickel-Alloy Aging Management Program (Section B2.1.37)
- Transmission Conductor, Connections, Insulators and Switchyard Bus and Connections (B2.1.38)
- Thermal Aging Embrittlement of Cast Austenitic Stainless Steel (CASS) (Section B2.1.39)

B1.6 TIME-LIMITED AGING ANALYSIS PROGRAMS

The following time-limited aging analysis aging management programs are described in this section. These programs are discussed in NUREG-1801. All programs discussed in this section are existing plant programs.

- Metal Fatigue of Reactor Coolant Pressure Boundary (Section B3.1)
- Environmental Qualification (EQ) of Electrical Components (Section B3.2)

B2 AGING MANAGEMENT PROGRAMS

The correlation between NUREG-1801, Generic Aging Lessons Learned programs and DCPP programs is shown below. For DCPP programs, links to appropriate sections of this appendix are provided.

NUREG-1801 NUMBER	NUREG-1801 PROGRAM	PLANT PROGRAM	EXISTING OR NEW	APPENDIX B REFERENCE
XI.M1	ASME Section XI Inservice Inspection, Subsections IWB, IWC, and IWD	ASME Section XI Inservice Inspection, Subsections IWB, IWC, and IWD	Existing	B2.1.1
XI.M2	Water Chemistry	Water Chemistry	Existing	B2.1.2
XI.M3	Reactor Head Closure Studs	Reactor Head Closure Studs	Existing	B2.1.3
XI.M4	BWR Vessel ID Attachment Welds	Not Applicable to a PWR	N/A	N/A
XI.M5	BWR Feedwater Nozzle	Not Applicable to a PWR	N/A	N/A
XI.M6	BWR Control Rod Drive Return Line Nozzle	Not Applicable to a PWR	N/A	N/A
XI.M7	BWR Stress Corrosion Cracking.	Not Applicable to a PWR	N/A	N/A
XI.M8	BWR Penetrations	Not Applicable to a PWR	N/A	N/A
XI.M9	BWR Vessel Internals	Not Applicable to a PWR	N/A	N/A
XI.M10	Boric Acid Corrosion	Boric Acid Corrosion	Existing	B2.1.4
XI.M11A	Nickel-Alloy Penetration Nozzles Welded To The Upper Reactor Vessel Closure Heads of Pressurized Water Reactors	Nickel-Alloy Penetration Nozzles Welded To The Upper Reactor Vessel Closure Heads of Pressurized Water Reactors	Existing	B2.1.5

NUREG-1801 NUMBER	NUREG-1801 PROGRAM	PLANT PROGRAM	EXISTING OR NEW	APPENDIX B REFERENCE
XI.M12	Thermal Aging Embrittlement of Cast Austenitic Stainless Steel (CASS)	Thermal Aging Embrittlement of Cast Austenitic Stainless Steel (CASS)	New	B2.1.39
XI.M13	Thermal Aging and Neutron Irradiation Embrittlement of Cast Austenitic Stainless Steel (CASS)	Not Credited	N/A	N/A
XI.M14	Loose Parts Monitoring	Not Credited	N/A	N/A
XI.M15	Neutron Noise Monitoring	Not Credited	N/A	N/A
XI.M16	PWR Vessel Internals	Not Credited	N/A	N/A
XI.M17	Flow-Accelerated Corrosion	Flow-Accelerated Corrosion	Existing	B2.1.6
XI.M18	Bolting Integrity	Bolting Integrity	Existing	B2.1.7
XI.M19	Steam Generator Tube Integrity	Steam Generator Tube Integrity	Existing	B2.1.8
XI.M20	Open-Cycle Cooling Water System	Open-Cycle Cooling Water System	Existing	B2.1.9
XI.M21	Closed-Cycle Cooling Water System	Closed-Cycle Cooling Water System	Existing	B2.1.10
XI.M22	Boraflex Monitoring	Not Applicable to DCPP	N/A	N/A
XI.M23	Inspection of Overhead Heavy Load and Light Load (Related to Refueling) Handling Systems	Inspection of Overhead Heavy Load and Light Load (Related to Refueling) Handling Systems	Existing	B2.1.11
XI.M24	Compressed Air Monitoring	Not Credited	N/A	N/A
XI.M25	BWR Reactor Water Cleanup System	Not Applicable for a PWR	N/A	N/A
XI.M26	Fire Protection	Fire Protection	Existing	B2.1.12

NUREG-1801 NUMBER	NUREG-1801 PROGRAM	PLANT PROGRAM	EXISTING OR NEW	APPENDIX B REFERENCE
XI.M27	Fire Water System	Fire Water System	Existing	B2.1.13
XI.M28	Buried Piping and Tanks Surveillance	Not Credited	N/A	N/A
XI.M29	Aboveground Steel Tanks	Not Credited	N/A	N/A
XI.M30	Fuel Oil Chemistry	Fuel Oil Chemistry	Existing	B2.1.14
XI.M31	Reactor Vessel Surveillance	Reactor Vessel Surveillance	Existing	B2.1.15
XI.M32	One-Time Inspection	One-Time Inspection	New	B2.1.16
XI.M33	Selective Leaching of Materials	Selective Leaching of Materials	New	B2.1.17
XI.M34	Buried Piping and Tanks Inspection	Buried Piping and Tanks Inspection	New	B2.1.18
XI.M35	One-Time Inspection of ASME Code Class 1 Small-Bore Piping	One-Time Inspection of ASME Code Class 1 Small-Bore Piping	Existing	B2.1.19
XI.M36	External Surfaces Monitoring Program	External Surfaces Monitoring Program	New	B2.1.20
XI.M37	Flux Thimble Tube Inspection	Flux Thimble Tube Inspection	Existing	B2.1.21
XI.M38	Inspection of Internal Surfaces in Miscellaneous Piping and Ducting Components	Inspection of Internal Surfaces in Miscellaneous Piping and Ducting Components	New	B2.1.22
XI.M39	Lubricating Oil Analysis	Lubricating Oil Analysis	Existing	B2.1.23
XI.E1	Electrical Cables and Connections Not Subject to 10 CFR 50.49 Environmental Qualification Requirements	Electrical Cables and Connections Not Subject to 10 CFR 50.49 Environmental Qualification Requirements	New	B2.1.24

NUREG-1801 NUMBER	NUREG-1801 PROGRAM	PLANT PROGRAM	EXISTING OR NEW	APPENDIX B REFERENCE
XI.E2	Electrical Cables and Connections Not Subject to 10 CFR 50.49 Environmental Qualification Requirements Used in Instrumentation Circuits	Electrical Cables and Connections Not Subject to 10 CFR 50.49 Environmental Qualification Requirements Used in Instrumentation Circuits	Existing	B2.1.25
XI.E3	Inaccessible Medium Voltage Cables Not Subject to 10 CFR 50.49 Environmental Qualification Requirements	Inaccessible Medium Voltage Cables Not Subject to 10 CFR 50.49 Environmental Qualification Requirements	Existing	B2.1.26
XI.E4	Metal Enclosed Bus	Metal Enclosed Bus	Existing	B2.1.36
XI.E5	Fuse Holders	Fuse Holders	New	B2.1.34
XI.E6	Electrical Cable Connections Not Subject to 10 CFR 50.49 Environmental Qualification Requirements	Electrical Cable Connections Not Subject to 10 CFR 50.49 Environmental Qualification Requirements	New	B2.1.35
XI.S1	ASME Section XI, Subsection IWE	ASME Section XI, Subsection IWE	Existing	B2.1.27
XI.S2	ASME Section XI, Subsection IWL	ASME Section XI, Subsection IWL	Existing	B2.1.28
XI.S3	ASME Section XI, Subsection IWF	ASME Section XI, Subsection IWF	Existing	B2.1.29
XI.S4	10 CFR Part 50, Appendix J	10 CFR Part 50, Appendix J	Existing	B2.1.30
XI.S5	Masonry Wall Program	Masonry Wall Program	Existing	B2.1.31
XI.S6	Structures Monitoring Program	Structures Monitoring Program	Existing	B2.1.32

NUREG-1801 NUMBER	NUREG-1801 PROGRAM	PLANT PROGRAM	EXISTING OR NEW	APPENDIX B REFERENCE
XI.S7	RG 1.127, Inspection of Water-Control Structures Associated with Nuclear Power Plants	RG 1.127, Inspection of Water-Control Structures Associated with Nuclear Power Plants	Existing	B2.1.33
XI.S.8	Protective Coating Monitoring and Maintenance Program	Not Credited	N/A	N/A
X.M1	Metal Fatigue of Reactor Coolant Pressure Boundary	Metal Fatigue of Reactor Coolant Pressure Boundary	Existing	B3.1
X.E1	Environmental Qualification (EQ) of Electrical Components	Environmental Qualification (EQ) of Electrical Components	Existing	B3.2
X.S1	Concrete Containment Tendon Prestress	Not Credited	N/A	N/A
N/A	Plant-Specific	Nickel-Alloy Aging Management Program	Existing	B2.1.37
N/A	Plant-Specific	Transmission Conductor, Connections, Insulators and Switchyard Bus and Connections	Existing	B2.1.38

B2.1 AGING MANAGEMENT PROGRAM DETAILS

B2.1.1 ASME Section XI Inservice Inspection, Subsections IWB, IWC, and IWD

Program Description

ASME Section XI Inservice Inspection, Subsections IWB, IWC, and IWD program inspections are performed to manage cracking, loss of fracture toughness, and loss of material in Class 1, 2, and 3 piping and components within the scope of license renewal. The program includes periodic visual, surface, volumetric examinations and leakage tests of Class 1, 2, and 3 pressure-retaining components, including welds, pump casings, valve bodies, integral attachments, and pressure-retaining bolting. These components are identified in ASME Section XI Tables IWB-2500-1, IWC-2500-1, and IWD-2500-1 for Class 1, 2 and 3 components, respectively. DCPP inspections meet ASME Section XI requirements. The DCPP ISI Program is in accordance with 10 CFR 50.55a and ASME Section XI, 2001 edition through 2003 addenda. In conformance with 10 CFR 50.55a(g)(4)(ii), the DCPP ISI Program is updated each successive 120-month inspection interval to comply with the requirements of the latest edition of the ASME Code specified 12 months before the start of the inspection interval.

The ASME Section XI, IWB, IWC, and IWD Inservice Inspection program is implemented by plant procedures. DCPP is in the third 10-year interval which will end on May 7, 2015 for Unit 1, and March 13, 2016 for Unit 2. DCPP is following Inspection Program B as allowed by the ASME Code. Requirements are included for scheduling of examinations and tests for Class 1, 2, and 3 components. The program requires periodic visual, surface, volumetric examinations and leakage tests of all Class 1, 2 and 3 pressure-retaining components. The DCPP ASME Section XI ISI program provides measures for monitoring to detect aging effects prior to loss of intended function and provides measures for repair and replacement of Class 1, 2, and 3 piping and components in accordance with the requirements of IWA-4000.

ISI of reactor vessel flange stud holes, closure studs, nuts, washers, and bushings are evaluated in the Reactor Head Closure Studs program (B2.1.3).

ISI of Class 1, 2, and 3 component supports are evaluated in the ASME Section XI, Subsection IWF program (B2.1.29).

The DCPP ASME Class 1, 2, and 3 components described in Subsections IWB-1220, IWC-1220, and IWD-1220 are exempt from the volumetric and surface examination requirements of Subsections IWB-2500, IWC-2500, and IWD-2500.

The ISI program is a monitoring program that provides measures for detecting the aging effects prior to loss of intended function, but does not prevent degradation due to aging effects.

The ISI Program uses visual, surface and volumetric examinations conducted in accordance with approved DCPP procedures that meet ASME Section XI requirements. Examinations are conducted by personnel qualified and certified in accordance with ASME Code requirements in Section XI IWA-2300. The NDE techniques used to inspect Class 1 (Table IWB-2500-1), Class 2 (Table IWC-2500-1), and Class 3 (Table IWD-2500-1) components are consistent with the ASME Section XI Code for the components.

The ISI Program, Subsections IWB, IWC, and IWD, is credited for detection of loss of fracture toughness aging effects in cast austenitic stainless steel piping, valves, and reactor coolant pump casings.

The ISI component examination schedules implemented in the DCPP ISI Program are consistent with the requirements of ASME Section XI, IWB-2412, IWC-2412, and IWD-2412 for Inspection Program B. Flaw indications and relevant conditions that have been evaluated and determined to be acceptable for continued service are re-examined during subsequent inspection periods. Flaw indications and relevant conditions that have been evaluated and exceed the acceptance standards are extended to include additional examinations in accordance with IWB-2430, IWC-2430, or IWD-2430.

Indications, relevant conditions, and resolution of rejectable indications and relevant conditions are evaluated as required by ASME Section XI IWB-3000, IWC-3000, and IWD-3000. DCPP evaluates every indication. Examination results are evaluated in accordance with IWB-3100 or IWC-3100 by comparing the results with acceptance standards of IWB-3400 and IWB-3500 or IWC-3400 and IWC-3500 for Class 1 or Class 2 and 3 components, respectively. Flaws exceeding the size of allowable flaws, as defined in IWB-3500 or IWC-3500 may be evaluated using the analytical procedures of IWB-3600 or IWC-3600.

NUREG-1801 Consistency

The ASME Section XI Inservice Inspection, Subsections IWB, IWC, and IWD program is an existing program that is consistent with NUREG-1801, Section XI.M1, ASME Section XI Inservice Inspection, Subsections IWB, IWC, and IWD.

Exceptions to NUREG-1801

None

Enhancements

None

Operating Experience

DCPP operating experience is evaluated and corrective actions are implemented to ensure that program operability is maintained. This is accomplished by promptly identifying and documenting any condition that indicates degradation of the systems that fall under the DCPP ISI Program, using the Corrective Action Program. Industry operating experience evaluations and ISI component inspections and testing results have proven that the effects of aging are adequately being managed so that the intended functions are maintained consistent with the current licensing basis for the period of extended operation

DCPP is now beginning the third 10-year interval of applying the requirements of ASME Section XI in its ISI Program to manage aging effects in Class 1, 2, and 3 components and their integral attachments in light-water cooled power plants. DCPP Inspections meet ASME Section XI requirements and can manage aging such as cracking, loss of material and loss of fracture toughness. The ASME Section XI ISI Program at DCPP has identified industry aging effects and has proven to maintain component structural integrity, and ensure that aging effects are discovered and repaired before the loss of component intended function.

Review of the second 10-year ISI Interval Summary Reports for 1R10, 1R11, 1R12, 1R13, 1R14, 1R15, 2R10, 2R11, 2R12, 2R13, and 2R14 indicates there were no aging related code repairs or code replacements required for continued service of ASME Tables IWB-2500-1, IWC-2500-1, and IWD-2500-1 Code components. The second 10-year ISI Interval Summary Reports reviewed did not indicate any program adequacy or implementation issues with the DCPP ASME Section XI Program for ASME IWB, IWC, and IWD code components.

An instance of accumulator nozzle cracking due to intergranular stress corrosion was identified in 1987. All nozzles were inspected and all nozzles that had unacceptable indications were weld-repaired or replaced with nozzles made of a new material.

Based on a review DCPP operating experience, relevant findings related to the ISI Program components have been identified and associated corrective actions have been taken.

The DCPP operating experience findings for this program identified no unique plant specific operating experience; therefore DCPP operating experience is consistent with NUREG-1801.

Conclusion

The continued implementation of the ASME Section XI Inservice Inspection, Subsections IWB, IWC, and IWD program provides reasonable assurance that aging effects will be managed such that the systems and components within the scope of this program will continue to perform their intended functions consistent with the current licensing basis for the period of extended operation.

B2.1.2 Water Chemistry

Program Description

The Water Chemistry program manages loss of material due to general corrosion, crevice corrosion and pitting corrosion and manages stress corrosion cracking in the primary and secondary water systems. The Program is a mitigation program that consists of a primary water chemistry program and a secondary water chemistry program. The scope of the primary water chemistry program includes maintenance of the chemical environment in the reactor coolant system and applicable auxiliary systems. The scope of the secondary water chemistry program includes maintenance of the chemical environment in the steam generator secondary side and the secondary cycle systems. Trending of primary and secondary chemistry and radiochemistry is performed.

The primary and secondary water chemistry control strategies are set forth in strategic plans. These strategies are implemented in plant chemistry procedures. The Water Chemistry program is a mitigation program and does not provide for detection of aging effects. The programmatic control of the chemical environment ensures that the aging effects due to contaminants are limited. The methods used to manage both the primary and secondary chemical environments rely on the principles of (1) limiting the concentration of chemical species known to cause corrosion, and (2) addition of chemical species known to inhibit degradation by their influence on pH and dissolved oxygen levels. For low flow areas and stagnant portions of the systems sampling may not be effective in determining local environmental conditions. A one-time inspection of a representative group of components, in accordance with the One-Time Inspection program (B2.1.16), will provide verification of the effectiveness of the Water Chemistry program in these low flow areas.

NUREG-1801 refers to EPRI TR-105714, Revision 3, for primary water chemistry, and to EPRI TR-102134, Rev. 3, for secondary water chemistry, but later revisions are accepted.

The primary water chemistry program is consistent with the guidelines of EPRI TR-105714, *PWR Primary Water Chemistry Guidelines*, Revision 6. Control parameter limits, sampling frequencies and corrective actions for fluorides, chlorides and dissolved oxygen in the Primary Water Chemistry Program are set forth in DCPP Equipment Control Guidelines (ECGs). Reactor coolant contaminant concentrations are minimized at DCPP by ensuring low concentrations of contaminants in makeup, maintaining adequate cleanup through demineralization,

using additives that have low concentrations of impurities, and monitoring for impurity concentrations routinely. Control of pH is achieved through the addition of lithium hydroxide. Hydrogen addition is used for oxygen scavenging in the reactor coolant system during normal operations. Hydrazine addition is used for oxygen scavenging in the reactor coolant system during preparation for startup and shutdown.

DCPP practices regarding monitoring and control of primary system chemical species and parameters are consistent with EPRI TR-105714, Revision 6, for primary systems and applicable PWR auxiliaries. The species, parameters and limits are specified in a plant procedure. Water quality (pH and conductivity) is maintained in accordance with the EPRI guidance. Sampling frequencies for primary chemistry parameters are procedurally specified. These parameters are monitored to mitigate degradation of structural materials. The corrective actions to be taken when primary chemistry parameter action limits are exceeded are also procedurally specified. The control parameters, diagnostic parameters and action levels associated with exceeding primary chemistry action limits are consistent with those specified in EPRI TR-105714, Revision 6. Parameter limits are specified for the pressurizer liquid space, letdown demineralizer outlet, residual heat removal system, primary water storage tank, boric acid tanks, refueling water storage tanks, spray additive tank, spent fuel pool water, accumulators, and refueling canal and cavity, in addition to those for the reactor coolant system.

The secondary water chemistry program is consistent with the guidelines of EPRI TR-102134, *PWR Secondary Water Chemistry Guideline*, Revision 7. The secondary water chemistry control strategy is implemented with administrative limits and action limits in plant procedures. Sampling frequencies for secondary chemistry parameters are specified in a plant procedure. Routine removal of secondary cycle contaminants is achieved by steam generator blowdown and periodic use of mixed-bed condensate demineralizers. Control of the pH level is achieved by the addition of an approved amine. Hydrazine is added to feedwater to scavenge oxygen and maintain a reducing environment in the steam generators.

The secondary water chemistry species, parameters and limits are specified in a plant procedure. The steam generator blowdown chemistry parameters monitored are consistent with those specified in EPRI TR-102134, Revision. Chemistry parameters are also monitored for the condensate system, condensate storage tank, main steam system, and individual polisher demineralizer effluent system. Sampling frequencies for secondary chemistry parameters are specified in a plant procedure, and corrective actions to be taken when secondary chemistry parameter action limits are exceeded are also procedurally specified. The control parameters and action levels associated with exceeding secondary chemistry action limits are consistent

with those specified in EPRI TR-102134, Revision 7. The EPRI Primary and Secondary Water Chemistry Guidelines make a clear distinction between "control parameters" and "diagnostic parameters". Strict adherence to control parameters is expected, whereas diagnostic parameters are suggested, but can be plant specific. Deviations from EPRI recommended diagnostic parameters are not considered exceptions to NUREG-1801.

NUREG-1801 Consistency

The Water Chemistry program is an existing program that is consistent with NUREG-1801, Section XI.M2, Water Chemistry.

Exceptions to NUREG-1801

None

Enhancements

None

Operating Experience

The Water Chemistry program is based on the guidance contained in EPRI guideline documents TR-105714, Revision 6 and TR-102134, Revision 7, which are based on industry-wide operating experience, research data, and expert opinion. The guidelines are periodically updated and approved by the industry using a consensus process.

A review of DCPP-specific operating experience has identified out of specification (OOS) primary water chemistry parameters. These OOS primary water chemistry parameters were transient in duration and most were associated with outage-related forced oxygenation and power fluctuations due to refueling outages, plant trips and curtailments. All of the OOS values were returned within specification in accordance with the chemistry procedural action time requirements. Plant evaluations determined that these OOS primary chemistry events did not have long-term negative effects on plant components.

A review of DCPP-specific operating experience has identified OOS secondary water chemistry. Most of these secondary water chemistry OOS parameters were transient in duration and were associated with maintenance activities or power fluctuations due to power outages, plant trips and curtailments. All of the OOS values were returned within specification in accordance with the chemistry procedural action time requirements. Plant evaluations determined that all of the

OOS secondary chemistry events did not have long-term negative effects on plant components. The following descriptions below correspond to those secondary water chemistry OOSs that were not isolated or transient events.

- Between May 1999 and March 2005, routine chemistry sampling identified events involving OOS dissolved oxygen levels for the Unit 1 and 2 condensate system caused by air in-leakage from the condensate booster pump boots and the main feedwater pump turbine exhaust boots. As a corrective action DCPP implemented a nitrogen supply to the condenser and condensate pump suction piping. Mechanical water seals were also installed on the main feedwater pump turbine exhaust boots. Since no OOS dissolved oxygen problem reports were found for the condensate system that could be attributed to air in-leakage since the corrective actions were implemented, these corrective actions were successful in eliminating this trend.

- Between March 1997 and January 2001, routine chemistry sampling identified events involving OOS hydrazine levels for the Unit 1 and 2 feedwater system. These events were attributed to nitrogen binding problems in the hydrazine pump suction lines. As a corrective action, the Unit 1 and 2 suction tubing to the hydrazine injection pumps was modified such that a valve and suction vent line were established in the piping that vented back to the hydrazine day tank. Since no OOS hydrazine problem reports were found for the feedwater system that could be attributed to gas binding since the suction line modification was performed in April 2001, this corrective action was successful in eliminating this trend.

- Between February 2006 and September 2006, routine chemistry sampling identified events involving OOS hydrazine incidents. The cause of the OOS hydrazine was attributed to the common injection line shared by the boron injection and hydrazine injection pumps. The boric acid injection normally fed at the rate of 5 to 8 gpm into the line, while the hydrazine line is substantially less. Procedures were modified to include steps that increased hydrazine before the hydrazine pumps were transferred. Since no OOS hydrazine problem reports were found for the feedwater system that could be attributed to this injection line design after procedures were modified, this corrective action was successful in eliminating this issue. This is not an issue anymore as boric acid is no longer needed to be injected into the feedwater system due to the new steam generators that were installed in refueling outages 2R14 (February 2008) and 1R15 (February 2009).

A review of Plant Performance Improvement Report metrics since January 2006 indicates that the DCPP Secondary Water Chemistry Program has performed well. However, feedwater iron transport to the steam generators was significantly higher than expected following the Unit 2 forced outage 2T15 in September 2008. Corrective actions included updating procedures to discuss forced outage guidance for maintaining the feedwater and condensate system chemistry to minimize iron transport and corrosion.

Biennial QA audits of the DCPP Chemistry Program were conducted in 1999, 2001, 2003, 2005, 2007, and 2009. These audits noted that the Chemistry Program complied with the requirements set forth by plant Technical Specifications, Equipment Control Guidelines, and procedures. In addition, the Chemistry Program was effective in implementing industry operating experience. Continuous program improvement through adoption of industry operating experience provides assurance that the program will remain effective for managing the effects of aging on plant components.

DCPP has implemented several industry-leading chemistry control alternatives for primary water chemistry, including zinc injection and a constant pH lithium control program. Efforts to reduce primary water stress corrosion cracking (PWSCC) in the steam generators resulted in the addition of zinc to the primary coolant. Addition of non-depleted zinc began at DCPP Unit 1 in June 1998 and in Unit 2 in March 1999 for the purpose of mitigating PWSCC, and as an added benefit for reducing radiation exposure. DCPP also has implemented a constant pH lithium control program beginning in refueling outages 1R13, 2005 and 2R13, 2006. Lithium concentrations are adjusted within the primary water system so that a pH level remains constant, which maintains an environment not conducive to corrosion. The concentration of lithium is controlled tightly to minimize pH fluctuations.

In-service inspection results of primary water system components have not identified evidence of aging attributed to loss of primary water chemistry control. Thus, there is reasonable assurance that primary water chemistry control will maintain the intended function of the primary water system components. Original steam generator eddy current test inspections had not identified evidence of PWSCC or other aging attributed to loss of water chemistry control. During refueling outages 2R14 (March 2008) and 1R15 (March 2009), DCPP replaced the Westinghouse Model 51 original steam generators with ENSA Delta 54 models. The Delta 54 replacement steam generators use Alloy 690TT, as opposed to Alloy 600, which was in the original steam generators. The 690TT material has superior resistance to corrosion and stress corrosion cracking. Since secondary water chemistry control maintained the intended function of the original more susceptible steam generators,

there is reasonable assurance that secondary water chemistry control will maintain the intended function of the less susceptible replacement steam generators.

The Water Chemistry program has been effective in maintaining its goal of meeting chemical specification requirements set forth by plant Technical Specifications, Equipment Control Guidelines, and procedures. Although, chemical limits have been exceeded, as described above most of these incidents were of a transient nature and levels were restored to within EPRI, industry, or DCPP specifications within the required time interval. Thus, the DCPP Water Chemistry program operating experience information provides objective evidence to support the conclusion that the effects of aging will be adequately managed so that the structure and component intended functions will be maintained during the period of extended operation. The DCPP operating experience findings for this program identified no unique plant specific operating experience; therefore DCPP operating experience is consistent with NUREG-1801.

Conclusion

The continued implementation of the Water Chemistry program, supplemented by the One-Time Inspection program (B2.1.16), provides reasonable assurance that aging effects will be managed such that the systems and components within the scope of this program will continue to perform their intended functions consistent with the current licensing basis for the period of extended operation.

B2.1.3 Reactor Head Closure Studs

Program Description

The Reactor Head Closure Studs program manages cracking and loss of material by providing periodic ASME Section XI inspections of reactor vessel flange stud hole threads, reactor head closure studs, nuts, and washers. The program includes periodic visual and volumetric examinations of reactor vessel flange stud hole threads, reactor head closure studs, nuts, and washers and performs visual inspection of the reactor vessel flange closure during primary system leakage tests. The current DCPP ISI Program implements ASME Code Section XI, Subsection IWB (2001 Edition including the 2002 and 2003 Addenda) Table IWB-2500-1 and manages reactor vessel stud, nut, and washer cracking, loss of material, and reactor coolant leakage from the reactor vessel flange. Reactor vessel flange stud hole threads, reactor head closure studs, nuts, and washers are identified in ASME Code Section XI , Subsection IWB Table IWB-2500-1 and are within the scope of license renewal.

Each of the reactor vessel flange stud hole threads, reactor head closure studs, nuts, and washers is inspected for potential cracking and loss of material through visual and volumetric examinations in accordance with ASME Section XI Subsection IWB requirements in DCPP procedures once every 10 years. These inspections are conducted during refueling outages. Reactor vessel studs are removed from the reactor vessel flange each refueling outage. Repair and replacement activities associated with reactor vessel flange closure head stud hole threads, reactor head closure studs, nuts, and washers are in accordance with the requirements of ASME Section XI, IWA-4000. Preventive measures include coating the studs, nuts, and washers after inspection and storing in protective racks after removal, as recommended in Regulatory Guide 1.65, *Material and Inspection for Reactor Vessel Closure Studs*. Reactor vessel flange holes are plugged with water tight plugs during cavity flooding. These methods assure the holes, studs, nuts, and washers are protected from borated water during cavity flooding. The reactor vessel flange is inspected for leakage prior to reactor startup during reactor coolant system pressure testing each refueling outage.

NUREG-1801 Consistency

The Reactor Head Closure Studs program is an existing program that is consistent with exception to NUREG-1801, Section XI.M3, Reactor Head Closure Studs.

Exceptions to NUREG-1801

Program Elements Affected

Detection of Aging Effects - Element 4

NUREG-1801 specifies that surface examination uses magnetic particle, liquid penetration, or eddy current examinations to indicate the presence of surface discontinuities and flaws. The current DCPP ISI Program for the third interval implements ASME Code Section XI, Subsection IWB (2001 Edition including the 2002 and 2003 Addenda), which does not require surface examination. The current DCPP ISI Program requires visual and volumetric examinations in accordance with ASME Section XI Subsection IWA-2000 requirements. The future 120-month inspection interval for DCPP will incorporate the then-current requirements specified in the version of the ASME Code incorporated into 10 CFR 50.55a twelve months before the start of the inspection interval.

Enhancements

None

Operating Experience

A review of DCPP operating experience has not identified any SCC, IGSCC, galling or wear affecting the reactor vessel closure studs, nuts, washer, and flange thread holes. The Refueling Outage Inservice Inspection Summary Reports for Interval 2 (1996-2006) indicate there were no repair/replacement items identified involving reactor vessel closure studs, nuts, washers, or flange thread holes due to aging issues.

The DCPP operating experience findings for this program identified no unique plant specific operating experience; therefore DCPP operating experience is consistent with NUREG-1801. The Reactor Head Closure Studs program operating experience information provides objective evidence to support the conclusion that the effects of aging will be adequately managed so that the intended function of the reactor head closure stud bolting will be maintained during the period of extended operation.

The ISI Program at DCPP is updated to account for operating experience and code revisions as required by 10 CFR 50.55a(g)(4)(ii), at the end of each 120-month interval. ASME Section XI is also revised every three years and addenda issued in the interim, which allows the code to be updated to reflect industry experience. The requirement to update the ISI Program to reference more recent editions of ASME Section XI at the end of each inspection interval ensures the ISI Program reflects

enhancements due to operating experience as well as changes incorporated into ASME Section XI.

Conclusion

The continued implementation of the Reactor Head Closure Studs program provides reasonable assurance that aging effects will be managed such that the systems and components within the scope of this program will continue to perform their intended functions consistent with the current licensing basis for the period of extended operation.

B2.1.4 Boric Acid Corrosion

Program Description

The Boric Acid Corrosion program manages loss of material due to boric acid leakage. The program monitors mechanical, electrical, and structural components within the scope of license renewal that are susceptible to boric acid corrosion from systems that contain reactor coolant or treated borated water. The program ensures that corrosion caused by leaking treated borated water/reactor coolant does not lead to degradation of the leakage source or adjacent structures and components in the leakage pathway. The internal surfaces of components with external boric acid deposits are inspected if there is evidence that boric acid may have entered the component internals. The program relies in part on implementation of recommendations of NRC Generic Letter 88-05, *Boric Acid Corrosion of Carbon Steel Reactor Pressure Boundary Components in PWR Plants*. Additionally, the program provides for timely detection of leakage by observing for boric acid crystals during specifically scheduled and normal plant walkdowns and maintenance, and ISI pressure tests performed in accordance with ASME Section XI requirements. The program also addresses recommendations in NRC Bulletins 2001-01, 2002-01, 2002-02, 2003-02, and associated requests for additional information, NRC Order EA-03-009 (superseded by Code Case N-729-1), NRC RIS 2003-13, and WCAP-15988-NP, Revision 1.

The Boric Acid Corrosion program includes provisions to identify leakage, inspect and examine for evidence of leakage, evaluate leakage and the surrounding area, and initiate corrective actions. Borated water leakage can result in dry boron crystals on a system, structure or component as a result of minor leakage, or moist crystals, fluid droplets, or a stream of liquid as a result of active leakage. Both minor and active leakage is addressed by the Boric Acid Corrosion program. The corrective action documents that identify boric acid leakage are screened to determine if a specific evaluation needs to be performed or if a boron accumulation can be treated by cleaning and monitoring for reoccurrence. The program requires corrective action for active leakage to be prioritized consistent with plant procedures and processes, and provides details on prioritization of corrective actions, severity, and criticality of leakage. The program also requires that all plant personnel are responsible for entering indications of boric acid leakage into the corrective action program when a leak is observed in any area of the plant. If the corrosion could have caused noticeable loss of material of a pressure boundary component, engineering evaluations are performed to determine the functionality of the component using appropriate Section XI acceptance criteria and the guidance in the EPRI Boric Acid Corrosion Guidebook. Various NDE techniques may be utilized to

support structural integrity evaluations if the boric acid leak path is suspected to be from a crack. The program maintains tracking and trending records for boric acid leakage from plant components and establishment of a component-based visual history of boric acid leakage/seepage. Long-term corrective actions to control boric acid leakage, to impede boric acid leakage, to impede boric acid attack, and to prevent recurrence of previous problems include the use of suitable materials, protective coatings and claddings, and increased RCS leakage monitoring, as appropriate.

NUREG-1801 Consistency

The Boric Acid Corrosion program is an existing program that is consistent with NUREG-1801, Section XI.M10, Boric Acid Corrosion.

Exceptions to NUREG-1801

None

Enhancements

None

Operating Experience

Operating experience at DCPP is evaluated and corrective actions implemented to maintain an effective Boric Acid Corrosion program. This is accomplished by promptly identifying and documenting (using the corrective action program) any boric acid leakage that could compromise operability of components. In addition, industry operating experience and DCPP Quality Verification assessments provide additional input to ensure that the program is maintained at an acceptable level.

Following the Davis-Besse event, the DCPP program was improved and the backlog of active corrective action documents has been steadily reduced. A review of DCPP operating experience shows that boric acid leakage is effectively identified and managed. The DCPP operating experience findings for this program identified no unique plant specific operating experience; therefore DCPP operating experience is consistent with NUREG-1801.

When boric acid leakage is identified, it is entered into the corrective action program, and managed in accordance with plant procedures. Reactor vessel head inspections performed in accordance with NRC First Revised Order EA-03-009 were performed during Units 1 and 2 Refueling Outages 13 and 14 (1R13, 2R13, 1R14, and 2R14 in 2005, 2006, 2007, and 2008, respectively). Minor localized dry boric

acid deposits on small valve packing glands were identified during refueling outages 2R13 and 2R14 and corrected. No evidence of leakage was identified from the pressure-retaining components above the RPV head during refueling outages 1R13, 1R14, 2R13, and 2R14. No evidence of boron or corrosive product was found. There was no evidence of: (1) head material wastage or of leaking or cracked nozzles; and (2) corrosion or damage due to leakage from the pressure-retaining components above the reactor head (minor leakage from valve packing and seals confined to the packing gland and seal area was identified and corrected).

In 2003, 2005, and 2007, DCPP Quality Verification assessments were performed for the Boric Acid Corrosion program. The assessment team evaluated areas including implementation of industry guidance, procedure and regulatory compliance, and technical rigor, program implementation effectiveness, program continuous improvement, program organization and human performance. The initial findings during the 2003 assessment concluded that, while the program was satisfactory, there was room for improvement. By 2007, all Quality Verification recommendations were incorporated into the program.

Adherence to established guidelines for systematic prevention, detection, monitoring, and corrective action demonstrates that the Boric Acid Corrosion program limits leakage and corrosion. The Boric Acid Corrosion program operating experience information provides objective evidence to support the conclusion that the effects of aging will be adequately managed so that the structure and component intended functions will be maintained during the period of extended operation.

Conclusion

The continued implementation of the Boric Acid Corrosion program provides reasonable assurance that aging effects will be managed such that the systems and components within the scope of this program will continue to perform their intended functions consistent with the current licensing basis for the period of extended operation.

B2.1.5 Nickel-Alloy Penetration Nozzles Welded to the Upper Reactor Vessel Closure Heads of Pressurized Water Reactors

Program Description

The Nickel-Alloy Penetration Nozzles Welded to the Upper Reactor Vessel Closure Heads of Pressurized Water Reactors program manages cracking due to Primary Water Stress Corrosion Cracking (PWSCC) and loss of material due to boric acid wastage in nickel-alloy vessel head penetration nozzles and includes the reactor vessel closure head, upper vessel head penetration nozzles and associated welds. This program was developed in response to NRC Order EA-03-009. ASME Code Case N-729-1, subject to the conditions specified in 10 CFR 50.55 a(g)(6)(ii)(D)(2) through(6), has superseded the requirements of NRC Order EA-03-009.

Detection of cracking is accomplished through implementation of a combination of bare metal visual examination (external surface of head) and surface and volumetric examination (underside of head) techniques. Evidence of reactor coolant leakage may manifest itself in the form of boric acid residues on the upper head or adjacent components or in the form of corrosion products that result from rusting of the low-alloy steel materials used to fabricate the vessel. The program conducts bare metal inspections to detect leakage from PWSCC and other sources by looking for deposition of boric acid on the external surface of the reactor vessel head. These deposits can be used to help detect and identify the origin of leaks. This examination also serves to detect leakage from other causes and sources in proximity to the top heads that may allow boric acid deposition on and subsequent corrosion of carbon steel components.

The Inservice Inspection (ISI) Program incorporates the governing inspections required by ASME Code Case N-729-1. A plant procedure conducts reactor vessel head bare metal visual inspections consistent with ASME Code Case N-729-1. Visual examiners shall be certified to at least Level II, VT 2; personnel performing the final evaluation of bare metal head examination data shall be Level III, VT 2.

The Nickel Alloy Penetration Nozzles Welded to the Upper Reactor Vessel Closure Heads of Pressurized Water Reactors program is a monitoring program that provides measures for detecting the aging effects prior to loss of intended function, but does not prevent degradation due to aging effects. Preventive measures for monitoring and maintaining reactor coolant water chemistry to mitigate PWSCC are consistent with the EPRI PWR Primary Water Chemistry Guidelines. The Primary Water Chemistry Program is described separately in the Water Chemistry program (B2.1.2).

The Unit 1 reactor pressure vessel (RPV) head is planned to be replaced during the 16th refueling outage beginning in October 2010 and the Unit 2 RPV head was replaced during the 15th refueling outage beginning in October 2009. All components penetrating the new reactor vessel closure heads and welded to the inner surfaces of the reactor vessel closure heads will be PWSCC-resistant material (Alloy 690). NDE examinations listed in Table 1, Item Numbers B4.30 and B4.40, of Code Case N-729-1, subject to the conditions specified in 10 CFR 50.55a(g)(6)(ii)(D)(2) through(6), will initially be performed for the new Alloy 690 nozzles for the baseline and subsequent examinations.

DCPP is committing to replace the reactor pressure vessel head on Unit 1 prior to the period of extended operation.

NUREG-1801 Consistency

The Nickel-Alloy Penetration Nozzles Welded to the Upper Reactor Vessel Closure Heads of Pressurized Water Reactors program is an existing program that is consistent with NUREG-1801, Section XI.M11A, Nickel-Alloy Penetration Nozzles Welded to the Upper Reactor Vessel Closure Heads of Pressurized Water Reactors.

Exceptions to NUREG-1801

None

Enhancements

None

Operating Experience

Based on a review of DCPP operating experience, the Nickel-Alloy Penetration Nozzles Welded to the Upper Reactor Vessel Closure Heads of Pressurized Water Reactors program has effectively managed potential degradation. In response to NRC generic correspondence, several inspections were performed and no evidence of degradation was found. A summary of inspections from the thirteenth and fourteenth refueling outages of both units are listed below.

DCPP completed Unit 1 refueling outage 1R13 in December 2005 and 1R14 in May 2007; DCPP completed Unit 2 refueling outage 2R13 in May 2006 and 2R14 in March 2008. During these refueling outages, DCPP performed bare metal visual inspections of the RPV head penetrations and visual inspection of the RPV head surface. No evidence of reactor vessel head penetration nozzle leakage or cracking, or degradation of the RPV head was identified. DCPP also performed nonvisual

nondestructive volumetric examination on all 79 reactor vessel head penetration tubes. The examination detected no discontinuities or indications of boric acid leak paths, and no flaws needing disposition or corrective action were identified. DCPP also performed a visual inspection to identify potential boric acid leaks from the pressure-retaining components above the RPV head. Minor localized dry boric acid deposits on small valve packing glands were identified during refueling outages 2R13 and 2R14 and corrected. No evidence of leakage was identified from the pressure-retaining components above the RPV head during refueling outages 1R13 and 1R14.

The Nickel-Alloy Penetration Nozzles Welded to the Upper Reactor Vessel Closure Heads of Pressurized Water Reactors program, operating experience information provides objective evidence to support the conclusion that the effects of aging will be adequately managed so that the RPV head intended function will be maintained during the period of extended operation.

The DCPP operating experience findings for this program identified no unique plant specific operating experience; therefore DCPP operating experience is consistent with NUREG-1801.

Conclusion

The continued implementation of the Nickel-Alloy Penetration Nozzles Welded to the Upper Reactor Vessel Closure Heads of Pressurized Water Reactors program provides reasonable assurance that aging effects will be managed such that the systems and components within the scope of this program will continue to perform their intended functions consistent with the current licensing basis for the period of extended operation.

B2.1.6 Flow-Accelerated Corrosion

Program Description

The Flow-Accelerated Corrosion (FAC) program manages wall thinning due to FAC on the internal surfaces of carbon steel piping, elbows, reducers, expanders, and valve bodies which contain high energy fluids (both single phase and two phases). The program implements the EPRI guidelines in NSAC-202L-R3 to detect, measure, monitor, predict and mitigate component wall thinning. To aid in the planning of inspections and choosing inspection locations, DCPP utilizes the EPRI predictive computer program CHECWORKS that uses the implementation guidance of NSAC-202L-R3.

FAC inspection locations are determined for piping greater than two inches in diameter that can be effectively modeled by the CHECWORKS program. The analyses are conducted using plant specific component data such as material, thickness, and plant operating conditions such as water chemistry, temperature, and flow based on the guidance provided in NSAC-202L-R3. FAC-susceptible systems that do not lend themselves to modeling are evaluated by qualified engineering staff in accordance with specific requirements, including the assessment of operating conditions, industry operating experience, and FAC history of subject components. Components that have been identified as potential industry concerns are included in the inspection program based on review of its applicability to DCPP.

The FAC program measures wall thickness primarily by Ultrasonic Testing (UT), although radiography may be used in lieu of UT. Wall thickness measurements provide input for CHECWORKS analysis for modeled large-bore piping systems. The FAC evaluation for non-modeled large-bore and small-bore systems also rely on wall thickness measurements from the inspection results. To assure detection of system wall thinning in advance of loss of intended function, the inspection extent and schedule are adjusted consistent with previous inspection results. Whenever inspections detect anomalies, such as wall thinning exceeding projected wear rates, additional components are selected for inspection in order to bound the extent of FAC degradation. The inspection results are evaluated to determine the schedule for reinspection, repair, or replacement before the component reaches the minimum acceptable wall thickness. The CHECWORKS model is periodically updated based on the inspection results and changes of plant design or operating conditions.

The objective of the FAC program is to provide reasonable assurance against a rupture of FAC-susceptible piping systems. This is accomplished by: (a) identifying system components susceptible to FAC by taking into consideration the piping

material composition, process fluid thermodynamic state, chemistry, and temperature; (b) performing analysis using the predictive code CHECWORKS to determine critical locations for inspection and evaluation; (c) performing inspections on a schedule based on results from CHECWORKS or other analysis, and performing follow-up inspections when necessary; and (d) planning for and specification of repairs or replacements prior to violation of Code minimum wall thickness requirements. FAC resistant replacement piping materials are used for replacements. These materials include stainless steel, chrome-moly alloy or carbon steel with trace chromium content greater than 0.1 percent by weight.

The program provides for continual evaluation and incorporation of latest technologies, industry and DCPP operating experience.

Procedures and methods used by the FAC program are consistent with DCPP commitments to NRC Bulletin 87-01, *Thinning of Pipe Wall in Nuclear Power Plants* and NRC Generic Letter 89-08, *Erosion/Corrosion-Induced Pipe Wall Thinning*.

NUREG-1801 Consistency

The Flow-Accelerated Corrosion program is an existing program that is consistent with exception to NUREG-1801, Section XI.M17, Flow-Accelerated Corrosion.

Exceptions to NUREG-1801

<u>Program Elements Affected</u>

Scope of Program - Element 1 and Detection of Aging Effects - Element 4

NUREG-1801, Section XI.M17, states that the FAC program should be based on the recommendations in NSAC-202L-R2. The guidelines provided in the governing procedure are based on the recommendations provided in the EPRI Guideline NSAC-202L-R3. The third revision of NSAC-202L contains recommendations updated with the experience of members of the CHECWORKS Users Group (CHUG), plus recent developments in detection, modeling, and mitigation technology. These recommendations are intended to refine and enhance those of the earlier versions, without contradiction, so as to ensure the continuity of existing plant FAC programs. The guidance contained in the third revision of NSAC-202L supersedes that contained in all prior versions of NSAC-202L.

Enhancements

None

Operating Experience

Plant-specific and industry operating experience is continuously evaluated and incorporated into the Flow-Accelerated Corrosion program to promote the maintenance of its primary goal of providing reasonable assurance against a rupture of FAC susceptible piping systems. This is accomplished by promptly identifying and documenting conditions that indicate degradation of FAC susceptible piping components. Periodic self assessments and independent audits provide additional assurance of program performance.

Based on a review of DCPP operating experience, FAC has been identified in susceptible carbon steel piping and components, and appropriate monitoring, repair and replacement activities have been effective. Inspection of the DCPP piping repair/replacement history provides objective evidence in support of this statement.

In the late 1980s, when the FAC program was being developed, DCPP was operating with low-pH ammonia feedwater chemistry, which resulted in high rates of wall thinning in the high pressure extraction steam and heater drains piping downstream of level control valves. This wear history is documented in the FAC program performance metrics, which are based on the quantity and severity of individual occurrences (events) of piping degradation discovered during outage inspections and events revealing themselves via in-service leakage. The metrics are reported under the requirements of 10 CFR 50.65, Maintenance Rule. The DCPP Maintenance Rule report shows FAC events numbering three and above through 1994, followed by a rapid decline to zero in 1999 and beyond.

The DCPP piping repair/replacement history is in agreement with this trend, with the number of emergent piping replacements (i.e., those whose replacement need was identified during the replacement outage) exceeding the number of pre-planned replacements up until about 1994. After 1994, emergent replacements diminished to the point that there were a total of two installed from 1998 through 2008.

An examination of the wall thickness data from any of the piping components replaced during these early plant outages showed rates of wall thinning (e.g., as much as 1/8 inches per cycle) and patterns of wall loss that, if allowed to continue unchecked, would likely have resulted in piping rupture within the first 15 years of plant life. This condition has been corrected through changes in feedwater chemistry and replacement of susceptible piping with FAC-resistant materials.

As of about the year 2000, feedwater piping downstream of the #1 feedwater heaters is the sole high-wear system in each DCPP unit. This piping is being monitored by the FAC program and will be replaced as required to ensure the piping maintains its intended functions consistent with the current licensing basis. The FAC

program will continue to monitor the remaining susceptible piping systems for the remainder of plant operating life. The DCPP operating experience findings for this program identified no unique plant specific operating experience; therefore DCPP operating experience is consistent with NUREG-1801.

The FAC program operating experience information provides objective evidence to support the conclusion that the effects of aging will be managed adequately so that the intended functions of the FAC-susceptible plant components will be maintained during the period of extended operation.

Conclusion

The continued implementation of the Flow-Accelerated Corrosion program provides reasonable assurance that the aging effects of wall thinning due to FAC will be managed such that the systems and components within the scope of this program will continue to perform their intended functions consistent with the current licensing basis for the period of extended operation.

B2.1.7 Bolting Integrity

Program Description

The Bolting Integrity program manages cracking, loss of material, and loss of preload for pressure retaining bolting and ASME component support bolting. The program includes preload control, selection of bolting material, use of lubricants/sealants consistent with EPRI good bolting practices, and performance of periodic inspections for indication of aging effects including leakage. The program also includes in-service inspection requirements established in accordance with ASME Section XI, Subsections IWB, IWC, IWD, and IWF for ASME Class bolting.

DCPP procedures include requirements for proper disassembling, inspecting, and assembling of connections with threaded fasteners. These procedures are consistent with EPRI NP-5067, *Good Bolting Practices, Volume 1 and Volume 2* and EPRI TR-104213, *Bolted Joint Maintenance and Applications Guide*.

Following the review of the recommendations provided in NRC Generic Letter 91-17, *Generic Safety Issue 29, Bolting Degradation or Failure in Nuclear Power Plants;* NUREG-1339, *Resolution of Generic Safety Issue 29: Bolting Degradation or Failure in Nuclear Power Plants;* and the EPRI reports, NP-5769, *Degradation and Failure of Bolting in Nuclear Power Plants;* and NP-5067, DCPP identified and implemented the actions related to bolting degradation or failure. The DCPP program references EPRI Good Bolting Practices, Vol. 1 and 2 to ensure the integrity of the subject bolting connections.

The following DCPP aging management programs supplement the Bolting Integrity program with management of cracking, loss of material, and loss of preload:

(a) ASME Section XI In-service Inspection, Subsections IWB, IWC and IWD program (B2.1.1), provides the requirements for in-service inspection of ASME Class 1, 2, and 3 safety-related pressure retaining bolting.

(b) ASME Section XI, Subsection IWF program (B2.1.29), provides the requirements for in-service inspection of safety-related component support bolting.

(c) External Surfaces Monitoring Program (B2.1.20) provides the requirements for inspection of pressure boundary closure bolting within the scope of license renewal.

NUREG-1801 Consistency

The Bolting Integrity program is an existing program that is consistent with exception to NUREG-1801, Section XI.M18, Bolting Integrity.

Exceptions to NUREG-1801

Program Elements Affected

Scope of Program - Element 1

NUREG-1801, Section XI.M18 specifies the use of ASME Section XI 1995 edition with addenda 1996. The ISI program is required to comply with the latest edition and addenda of the Code incorporated by reference in 10 CFR 50.55a one year prior to the start of an inspection interval. Accordingly, the ASME Section XI 2001 Edition through 2003 addenda is the Code that DCPP must meet for the third interval ISI Program. Use of the 2001 Code through 2003 addenda does not change the requirements regarding inspections, evaluations and corrective actions for safety-related bolting to ensure the integrity of the intended functions. In addition, for the period of extended operation, DCPP is required to update its Code of Record to the Edition and Addenda as referenced in 10 CFR 50.55a(b) 12 months prior to the start of each 120-month interval.

Parameters Monitored or Inspected - Element 3

NUREG-1801, Section XI.M18 specifies bolting for safety related pressure retaining components is inspected for loss of preload/prestress. The DCPP Bolting Integrity Program does not inspect for loss of preload/prestress. Installation torque values are provided in plant procedures if not provided by the vendor instructions, design documents or specifications. The installation torque values provided in plant procedures are based on the industrial experience that includes the consideration of the expected relaxation of the fasteners over the life of the joint and gasket stress in the application of pressure closure bolting. The discussion of bolt preload in EPRI NP-5769, Vol. 2, Section 10, indicates that job inspection torque is non-conservative since for a given fastener tension more torque is required to restart the installed bolts. EPRI NP-5769, Vol. 2, Section 10 suggests that inspection of preload is usually unnecessary if the installation method has been carefully followed.

Monitoring and Trending - Element 5

NUREG-1801, Section XI.M18 specifies that if a bolting connection for pressure retaining components (not covered by ASME Section XI) is reported to be leaking, then it may be inspected daily. If the leak rate does not increase, the inspection

frequency may be decreased to biweekly or weekly. DCPP procedures require that when a leak is found it is entered into the Corrective Action Program and evaluated based on the fluid, leak rate, leak location, potential impact on personnel safety, potential impact on other components, and radiation protection concerns, to determine the appropriate corrective actions and frequency of monitoring.

Enhancements

None

Operating Experience

Based on a review of DCPP operating experience, the Bolting Integrity program has effectively identified and addressed issues relating to bolting integrity. The following is a discussion of bolting failure that occurred in 2001.

An occurrence of a bolting failure caused by a combination of unanticipated high temperature embrittlement and elevated stress, due to overtorquing, in the presence of a corrodant occurred at DCPP in 2001. Laboratory tests on the failed fasteners showed that these fasteners had become embrittled after 10 years at elevated temperature and were therefore much more susceptible to stress corrosion cracking. Corrective actions included revising maintenance procedures to provide specific final torque values and to require an engineering evaluation to determine service life when similar bolting material is used at elevated temperatures. Components with susceptible bolting material were identified and evaluated for replacement based on service temperature, service life, fastener stress intensity, and chemical composition. Since this bolting failure, there have been no aging-related bolting failures at DCPP.

Both the industry and NRC have identified a number of instances of bolting concerns from material control and certification (e.g. NRC IEB 87-02) to bolting practices, use of lubrication and injection sealants and its effect on stress corrosion cracking (SCC) (e.g., NRC IEB 82-02, and INPO SOER 84-05). The DCPP Bolting Integrity program incorporates the applicable industry experience on bolting issues into the program. Actions taken include confirmatory testing/analysis or inspections.

Operating experience at DCPP that pertains to bolting integrity demonstrates that the aging effects of cracking, loss of material, and loss of preload for pressure retaining bolting and ASME component support bolting have been adequately managed. This is accomplished through the use of the corrective action program by promptly identifying, documenting, and correcting conditions or events that could compromise bolting integrity. In addition, industry operating experience provides additional input to ensure that the program is maintained at an acceptable level. The

program is continually improved to assure the capability of mechanical bolting to support the safe operation of DCPP throughout the period of extended operation. The DCPP operating experience findings for this program identified no unique plant specific operating experience; therefore DCPP operating experience is consistent with NUREG-1801.

Conclusion

The continued implementation of Bolting Integrity program provides reasonable assurance that aging effects will be managed such that the systems and components within the scope of this program will continue to perform their intended functions consistent with the current licensing basis for the period of extended operation.

B2.1.8 Steam Generator Tube Integrity

Program Description

The Steam Generator Tube Integrity program manages the aging of steam generator tubes, plugs, and tube supports. The scope of the program includes the preventive measures, inspections, degradation assessment, condition monitoring, operational assessment, tube plugging, and leakage monitoring activities necessary to manage potential steam generator tube degradation, including mechanically induced phenomena, such as wear and impingement damage. The aging management measures employed includes nondestructive examinations, visual inspection, sludge removal, tube plugging, in-situ pressure testing and maintaining the chemistry environment by removal of impurities and addition of chemicals to control pH and oxygen. NDE inspection scope and frequency, and primary to secondary leak rate monitoring are conducted consistent with the requirements of DCPP Units 1 and 2 Technical Specifications and NEI 97-06, *Steam Generator Program Guidelines*. Tube structural integrity limits are applied consistent with Regulatory Guide 1.121, *Bases for Plugging Degraded PWR Steam Generator Tubes*, August 1976.

Guidance for steam generator management at DCPP is specified in plant procedures for steam generator tube integrity inspection and assessment, degradation assessment, maintenance, plugging or repair and primary to secondary leakage monitoring. Procedures also monitor and control secondary and primary side water chemistry. The DCPP steam generator tube inspection frequency is governed by the Technical Specifications and is evaluated as part of the Degradation Assessment performed prior to each refueling outage. Plugging criteria for removing tubes from service are consistent with the Technical Specifications.

The Steam Generator Tube Integrity program includes foreign material exclusion guidance, consistent with NEI 97-06. Plant procedural guidance includes measures to prevent the introduction of foreign material when access is provided to the primary and secondary sides of the steam generators. A secondary side foreign object search and retrieval effort is conducted when the hand hole covers are removed for maintenance to identify and remove loose parts and foreign material.

The Water Chemistry program (B2.1.2) mitigates the potentially corrosive effects of the primary and secondary water on the interior and exterior surfaces of the steam generator tubes and other steam generator internals.

Aging management activities for steam generator tubing integrity are controlled by plant procedures. DCPP procedural guidance includes performance criteria for tube structural integrity, operational leakage and accident induced leakage, and reporting criteria. The training and qualification standards for personnel engaged in non-destructive examination (NDE) activities are specified in a plant procedure. Inspection practices are consistent with the EPRI PWR Steam Generator Examination Guidelines. DCPP programmatic guidance also requires that each inspection be based on a degradation assessment that considers DCPP historical data and industry operating experience from other similar steam generators.

The Degradation Assessment is performed to the guidelines of EPRI Steam Generator Integrity Assessment Guidelines, which covers degradation mechanisms, acceptable inspection techniques and sampling strategies. The Degradation Assessment assesses degradation of all components that affect steam generator tube integrity such as tubes, plugs and tube supports. Tube sleeves are not an approved method of repair at DCPP.

During each outage when the steam generator tubes are inspected or plugged, a Condition Monitoring and Operational Assessment is conducted to confirm that the structural and leakage integrity performance criteria have been satisfied. All degraded conditions identified during Steam Generator inspections are addressed in the DCPP corrective action program. All degraded steam generator tubes meeting the steam generator tube plugging criteria are removed from service by plugging.

NUREG-1801 Consistency

The Steam Generator Tube Integrity program is an existing program that is consistent with NUREG-1801, Section XI.M19, Steam Generator Tube Integrity.

Exceptions to NUREG-1801

None

Enhancements

None

Operating Experience

The Steam Generator Tube Integrity program tube inspection requirements are consistent with NEI 97-06. The program benefits from the industry operating experience available when the initiative was issued as well as the EPRI guidelines it endorses.

NRC Information Notice 97-88, *Experiences During Recent Steam Generator Inspections* addressed the importance of recognizing the potential for degradation in areas that have not previously experienced tube degradation and the importance of licensees to assess the significance of indications with respect to the qualification of the inspection techniques and the manner in which the indications were detected. The DCPP steam generator Degradation Assessment evaluates industry experience as well as DCPP experience to identify active, relevant and potential tube damage mechanisms. Some of the important features of the Degradation Assessment include: choosing techniques to test for degradation based on the probability of detection and sizing capability, establishing the number of tubes to be inspected, establishing the structural limits, establishing the flaw growth rate or a plan to establish the flaw growth rate.

DCPP has replaced all four steam generators in each unit with Westinghouse Model Delta 54 steam generators, which contain Alloy 690 thermally treated tubes. The replacements took place during 2R14 in February 2008 for Unit 2 and 1R15 in February 2009 for Unit 1. A review of industry operating experience indicates that there have been no reported instances of cracking in thermally-treated Alloy 690 tubes at any U.S. plant. All degradation indications to date are from wear (fretting) due to loose parts, tube supports, anti-vibration bars, and manufacturing or handling anomalies. The tubing and secondary internals in these units are not susceptible to corrosion due to advanced material design.

The DCPP operating experience findings for this program identified no unique plant specific operating experience; therefore DCPP operating experience is consistent with NUREG-1801. As additional Industry and applicable plant-specific operating experience become available, the Operating Experience (OE) will be evaluated and appropriately incorporated into the program through the DCPP Corrective Action and Operating Experience Programs. This ongoing review of OE will continue throughout the period of extended operation, and the results will be maintained on site. This process will confirm the effectiveness of this license renewal aging management program by incorporating applicable OE and performing self assessments of the program.

Conclusion

The continued implementation of the Steam Generator Tube Integrity program provides reasonable assurance that aging effects will be managed such that the systems and components within the scope of this program will continue to perform their intended functions consistent with the current licensing basis for the period of extended operation.

B2.1.9 Open-Cycle Cooling Water System

Program Description

The Open-Cycle Cooling Water (OCCW) System program manages cracking, loss of material, and reduction of heat transfer for components exposed to the raw water of the DCPP OCCW system. The DCPP OCCW system is the auxiliary saltwater (ASW) system.

Components within the scope of the OCCW System program are components of the ASW system and the component cooling water (CCW) heat exchangers that are cooled by the ASW system.

The program includes surveillance and control techniques to manage aging effects caused by biofouling, corrosion, erosion, protective coating failures, and silting in components of the ASW system or structures and components serviced by the ASW system that are within the scope of license renewal. The program also includes periodic visual inspections and non-destructive examinations to detect biofouling, defective coatings and degraded piping and components of, systems and components, and CCW heat exchanger performance testing, to ensure that the effects of aging on components are adequately managed for the period of extended operation. The program is consistent with DCPP commitments established in responses to NRC Generic Letter 89-13, *Service Water System Problems Affecting Safety-Related Components*.

The ASW pump bays are inspected and cleaned once per refueling cycle by divers. Coatings for equipment in the Intake Structure area are inspected annually. The inspection specifically addresses blistering, cracking, peeling, and rust penetration of coatings. Coatings are not credited in aging management; however, inspection of coating integrity provides a leading indicator of the integrity of the underlying material.

Visual examinations of the ASW System piping are performed every fourth refueling outage to inspect the integrity of the plastic pipe liner and detect indications of corrosion of the base piping material. The extent and type of biofouling observed in the pipe is also evaluated. Periodic performance testing of the CCW heat exchangers is performed prior to each refueling outage to verify their heat transfer capability. Test results are documented, and trended for heat removal capabilities. The CCW heat exchangers are inspected and cleaned during each refueling outage during which time the inlet and outlet waterbox coatings are inspected, and eddy current inspections of the tubes are performed. The acceptance criteria for these activities are specified as appropriate in plant procedures.

The OCCW System program relies on appropriate materials, chemical treatment, flushing and cleaning of system components to mitigate loss of material and fouling in the OCCW system.

NUREG-1801 Consistency

The Open-Cycle Cooling Water System program is an existing program that is consistent with NUREG-1801, Section XI.M20, Open-Cycle Cooling Water System.

Exceptions to NUREG-1801

None

Enhancements

None

Operating Experience

DCPP operating experience is evaluated and corrective actions are implemented to ensure that system operability is maintained. This is accomplished by promptly identifying and documenting any condition that indicates degradation of the DCPP OCCW system, using the Corrective Action Program. Industry operating experience evaluations, Maintenance Rule Periodic Assessments, and OCCW component performance testing results have proven that the effects of aging are adequately being managed so that the intended functions are maintained consistent with the current licensing basis for the period of extended operation.

A review of the plant-specific operating experience indicates that biofouling (macrofouling) and microbiologically induced corrosion (MIC) have been observed in the ASW system. The majority of the operating experience concerned biofouling of the CCW heat exchangers and service cooling water heat exchangers, which have ASW system saltwater on the tube sides and closed-cycle cooling water on the shell sides.

The ASW System is continuously chlorinated to control marine macrofouling and MIC in the saltwater system. The effectiveness of biofouling and MIC control is verified during system inspections. DCPP OE indicates that macrofouling will not accumulate sufficiently in the CCW heat exchanger to degrade the performance of the heat exchanger with the continuous chlorination system in service. Performance testing has demonstrated that the continuous chlorination system and CCW heat exchanger maintenance practices are capable of controlling macrofouling levels significantly less than the total design fouling factor.

During routine inspections, valves in the ASW system have also been found with corrosion. In each instance, corrective actions were performed, and the valves were returned to service. General corrosion of steel components has been experienced, and corrective actions have been implemented for repair or replacement. The DCPP operating experience findings for this program identified no unique plant specific operating experience; therefore DCPP operating experience is consistent with NUREG-1801.

The guidance of NRC Generic Letter 89-13 has been implemented and has been effective in managing aging effects due to biofouling, corrosion (including MIC), erosion, protective coating failures, and silting in structures and components in the OCCW system. NRC Generic Letter 89-13 was based on industry operating experience and forms the basis for the DCPP OCCW System program.

Conclusion

The continued implementation of the Open-Cycle Cooling Water System program provides reasonable assurance that aging effects will be managed such that the systems and components within the scope of this program will continue to perform their intended functions consistent with the current licensing basis for the period of extended operation.

B2.1.10 Closed-Cycle Cooling Water System

Program Description

The Closed-Cycle Cooling Water (CCCW) System program manages loss of material, cracking and reduction of heat transfer for components in the closed-cycle cooling water systems. The program provides for: (1) preventive measures to minimize corrosion including maintenance of corrosion inhibitor, pH buffering agent, and biocide concentrations, and (2) periodic system and component performance testing and inspection. Preventive measures include the monitoring and control of corrosion inhibitors and other chemical parameters, such as pH, in accordance with the guidelines of EPRI TR-107396, Revision 1 (EPRI 1007820). Periodic inspection and testing to confirm function and monitor corrosion is performed in accordance with EPRI TR-107396, Revision 1 (EPRI 1007820), and industry and plant operating experience.

DCPP has four systems within the scope of license renewal that meet the definition for CCCW systems in GL 89-13 and portions of additional systems (heat exchangers or coolers) that are serviced directly by these systems. These CCCW systems are not subject to significant sources of contamination. The water chemistry is controlled in these systems and heat is not directly rejected to a heat sink.

The CCCW systems in License Renewal scope are:

- component cooling water (CCW) system
- service cooling water (SCW) system
- diesel engine jacket cooling water (DECW) system, a subsystem of the diesel generator system
- auxiliary building HVAC system

The program maintains water chemistry within the parameter limits specified in plant procedures and consistent with those in EPRI TR-107396, Revision 1 (EPRI 1007820), in order to minimize corrosion and microbiological growth. The chemicals added to the CCW and SCW systems are potassium molybdate (iron and aluminum corrosion inhibitor), potassium nitrite (iron corrosion inhibitor), tolyltriazole (TTA - a copper corrosion inhibitor), potassium tetra borate (buffering), potassium hydroxide (pH control), glutaraldehyde (biocide) and isothiazoline (biocide). The chemicals added to the DECW system are potassium dichromate and potassium hydroxide (corrosion inhibitors). The cooling water system associated with the

auxiliary building HVAC system is maintained as a sealed pure water system based on potable water, without additives.

The CCCW System program periodically monitors system chemistry to verify it is being maintained in accordance with the guidelines of EPRI TR-107396, Revision 1 (EPRI 1007820), with stated exceptions, to minimize corrosion and SCC. In addition, non-chemistry testing and inspection techniques consistent with EPRI TR-107396, Revision 1 (EPRI 1007820), are used to confirm the effectiveness of the program.

The CCW pumps are periodically tested to verify pump performance. Non-destructive examinations are used to verify that the pressure boundary intended function of the CCW heat exchangers is maintained. Periodic performance testing of the CCW heat exchangers is part of the Open-Cycle Cooling Water System program (B2.1.9). Diesel engine performance parameters are monitored through periodic surveillance tests. These tests are used to monitor the performance of the DECW System components. Inspections are performed periodically on the in-scope DECW components.

The SCW system and the auxiliary building HVAC system chilled water systems are within the scope of license renewal per 10 CFR 54.4(a)(2) for spatial interaction concerns only. Therefore, the only component intended function applicable to these systems is (a)(2) leakage boundary (spatial). The periodic sampling and maintenance of system chemistry within specified limits are adequate to manage aging before the loss of this intended function.

NUREG-1801 Consistency

The Closed-Cycle Cooling Water System program is an existing program that, following enhancement, will be consistent with exception to NUREG-1801, Section XI.M21, Closed-Cycle Cooling Water.

Exceptions to NUREG-1801

<u>Program Elements Affected</u>

Preventive Actions - Element 2, Parameters Monitored/Inspected - Element 3, and Acceptance Criteria - Element 6

EPRI TR-107396, *Closed Cooling Water Chemistry Guideline*, Revision 1, Table 5-4, establishes a normal chromate concentration operating range of 150 - 300 ppm. DCPP Unit 1 and Unit 2 operate in the chromate concentration range of 1580 - 3150 ppm for the DECW System. The EPRI limit is based on the National Association of

Corrosion Engineers (NACE) Report #7G181, 1981. This report investigated the influence of water treatment chemicals on mechanical seals and concluded that the degradation rate of some seals increased with the concentration of chromate. DCPP has not observed seal failures that were attributed to the concentration of chromates in the DECW System. DCPP operating experience and recent industry research on the subject provide evidence that supports DCPP operating at chromate concentration levels greater than those established by the EPRI Closed Cooling Water Chemistry Guideline.

Preventive Actions - Element 2 and Parameters Monitored/Inspected - Element 3

EPRI TR-107396, *Closed Cooling Water Chemistry Guideline*, Revision 1, Table 5-4 establishes chloride and fluoride as control parameters to be monitored monthly. DCPP Unit 1 and Unit 2 do not monitor or analyze chloride and fluoride in the DECW system. The makeup water to the DECW system is demineralized and there are no known pathways for chloride or fluoride to enter the jacket cooling water. Also, chromates are anodic inhibitors and the concentration in the jacket cooling water is maintained above a level that prevents the onset of pitting corrosion due to chloride and fluoride.

Preventive Actions - Element 2, Parameters Monitored/Inspected - Element 3

EPRI TR-107396, *Closed Cooling Water Chemistry Guideline*, Revision 1, Table 5-4 establishes a monthly monitoring frequency for DECW control parameters under stable conditions. DCPP Unit 1 and Unit 2 currently perform a quarterly monitoring frequency for these DECW control parameters under stable conditions. The jacket cooling water chemistry has remained stable at DCPP for over 25 years. Increasing the sampling frequency would increase the amount of hazardous waste generated, and the amount of makeup required to replace the sample and purge volume. In addition, the jacket cooling water is an isolated system and contamination of the coolant is not expected. The high chromate concentration maintained at DCPP results in a very tenacious protective oxide corrosion layer that has a minimal corrosion rate.

Parameters Monitored or Inspected - Element 3, Detection of Aging Effects - Element 4, and Monitoring and Trending - Element 5

NUREG-1801, Section XI.M21, Element 3, states that the CCCW Program should monitor heat exchanger parameters including flow, inlet and outlet temperatures, and differential pressure. NUREG-1801, Section XI.M21, Element 4, states that performance and functional testing ensures acceptable functioning of the CCCW system or components serviced by the CCCW system. NUREG-1801, Section XI.M21, Element 5, states that internal visual inspections and performance/functional

tests are to be performed periodically to confirm the effectiveness of the program. Exception is taken to performance testing and inspection of the heat exchangers served by the CCCW systems. At DCPP, performance/ functional testing and inspection of the heat exchangers served by the in-scope CCCW systems are not performed as part of the CCCW Program. EPRI TR-107396, Revision 1 (EPRI 1007820), Section 8.4.4, states that performance testing is typically part of an engineering program, as opposed to a CCCW program. Functional and performance testing verify that component active functions can be accomplished, and as such the testing is within the scope of the Maintenance Rule (10 CFR 50.65). The CCCW Program utilizes corrosion monitoring which includes component inspections to monitor program effectiveness in managing component degradation that could impact a passive function. Chemical analysis of iron and copper in the bulk water is performed to monitor the buildup of dissolved corrosion products. Higher than expected concentration levels of total iron and copper indicate possible corrosion within the closed-cycle cooling water systems. Measurement of accumulated corrosion products such as iron and copper provides an indirect indication of system corrosion.

DCPP employs non-chemistry testing and inspection techniques consistent with EPRI TR-107396, Revision 1 (EPRI 1007820), Section 8.4 (Non-Chemistry Monitoring), to evaluate system and component performance, determine the potential for loss of material or leakage caused by corrosion or SCC, and to monitor the potential for decreased flow capacity and heat transfer degradation caused by fouling. Plant procedures set forth testing and inspection requirements and frequency of performance. The techniques include thermal performance testing (performed on the CCW heat exchangers as part of the Open-Cycle Cooling Water Program), flow testing, operability testing and visual inspections. Visual inspections of the CCW supply isolation check valves to the reactor coolant pumps (valves CCW-1-585 and CCW-2-585) are used as a leading indicator of the condition of the interior of piping components otherwise inaccessible for visual inspection. This periodic internal inspection will detect loss of material and fouling.

Corrosion test loops using corrosion coupons are in place for Unit 1 and Unit 2 in the CCW and SCW Systems. These coupons have been visually examined with no detectible corrosion. Corrosion spool pieces with an orifice to create low flow are installed for the CCW System in Unit 1 and Unit 2. These are visually examined to detect bio-fouling. If bio-fouling is observed, potential surface corrosion will be evaluated to determine if a sample should be sent off for bacteria culture analysis to determine if there is MIC-type bacteria.

In lieu of performance testing and inspection of the heat exchangers served by the DECW system, diesel engine performance testing monitors various engine

parameters monthly to validate the operability of the engines and to verify the performance of both the heat exchangers and pumps.

The diesel engine generator jacket cooling pumps, diesel engine generator jacket water after-coolers, diesel engine jacket water radiators and diesel engine lube oil heat exchangers are not individually monitored for flow, inlet and outlet temperatures and differential pressure and internal visual inspections are not performed on each component. At DCPP, diesel engine performance parameters are monitored through periodic Technical Specification surveillance tests and internal visual inspections of selected components that serve as leading indicators for the condition of surfaces exposed to closed-cycle cooling water. Diesel engine generator performance testing monitors various engine parameters to validate the operability of the engines and to verify the performance of both the heat exchangers and the pumps. Test data gathered includes DECW system cooling system levels, temperature and pressures from which the DECW heat exchanger performance and pump performance can be inferred. Trending of these parameters will detect component aging prior to loss of intended function. The jacket water after coolers are hydro tested. The jacket water radiators are visually inspected and cleaned. The diesel engine lube oil heat exchangers are internally inspected visually. The surveillance tests together with periodic hydro and internal visual inspections and the periodic sampling and control of system water chemistry are adequate to ensure the component intended functions are maintained within the DECW system.

EPRI TR-107396, Revision 1 (EPRI 1007820), Section 8.2, addresses fouling and indicates that fouling is unlikely to be significant for component surfaces exposed to closed cooling water. It states that control of both corrosion and microbiological growth will prevent fouling of CCCW systems and that visual examination is one of the most effective methods of determining the extent of fouling. For many heat exchangers, fouling of the closed cooling water side surfaces is insignificant compared with fouling on the opposite side of the heat exchanger and therefore reductions in the overall heat transfer coefficient may not be related to fouling of the closed cooling water side heat exchange surfaces. Raw water system heat exchangers are a primary example.

The DCPP position is consistent with the EPRI approach. Reductions in heat transfer are managed through a combination of chemistry controls and inspection activities. Chemistry controls are generally adequate to prevent buildup of significant fouling on heat exchanger surfaces. Periodic inspections are used to confirm the condition of component surfaces, including heat exchange surfaces.

The heat exchangers served by the CCCW systems that are in scope of license renewal per 10 CFR 54.4(a)(2) for spatial interaction concerns only, are not tested or

inspected. The only intended function of these heat exchangers is (a)(2) leakage boundary (spatial). Periodic sampling and maintenance of system chemistry are adequate to manage aging for these components before the loss of intended function.

Preventive Actions - Element 2, Parameters Monitored/Inspected - Element 3, Detection of Aging Effects - Element 4, Monitoring and Trending - Element 5, Acceptance Criteria - Element 6, and Corrective Actions - Element 7

The program described in NUREG-1801, Section XI.M21, is based on the 1997 version of the EPRI Closed Cooling Water Chemistry Guideline, TR-107396, Revision 0. The DCPP CCCW System program currently uses the 2004 version of the EPRI Closed Cooling Water Chemistry Guideline, Revision 1. This exception is acceptable because the EPRI Closed Cooling Water Chemistry Guideline is a consensus document that is updated based on new operating experience, research data, and expert opinion. Incorporation of later versions of the guidance document ensures that the program addresses new information. DCPP has reviewed EPRI Closed Cooling Water Chemistry Guideline, Revision 1, and has determined that the most significant difference is that the new revision provides more prescriptive guidance and has a more conservative monitoring approach. The new revision meets the same requirements of EPRI TR-107396, Revision 0, for maintaining conditions to minimize corrosion and microbiological growth in closed cooling water systems for effectively mitigating many aging effects.

Enhancements

Prior to the period of extended operation, the following enhancement will be implemented in the following program element:

Monitoring and Trending - Element 5

DCPP will utilize inspections of the CCW supply isolation check valves to the reactor coolant pumps (valves CCW-1-585 and CCW-2-585) as a leading indicator of the condition of the interior of piping components otherwise inaccessible for visual inspection. This periodic internal inspection will detect loss of material and fouling. The inspections are scheduled to be performed for Unit 1 and for Unit 2 at least once every five years. Plant procedures will be enhanced to include the acceptance criteria.

Operating Experience

The CCCW System program is based on the guidance contained in EPRI TR-107396, Revision 1 (EPRI 1007820), which itself is based on industry-wide

operating experience, research data, and expert opinion. The guideline is periodically updated and approved by the industry using a consensus process.

DCPP operating experience is evaluated and corrective actions are implemented for chemical concentrations, monitoring and testing, thereby minimizing aging effects to ensure adherence to EPRI TR-107396, Revision 1 (EPRI 1007820). This is accomplished by promptly identifying and documenting (using the Corrective Action Program) any conditions that indicates degradation of the DCPP CCCW systems. In addition, industry operating experience, self assessments and independent audits provide additional input to ensure that program operability is maintained at an optimum level.

In 1995, biofouling was discovered in the CCW system. CCW heat exchanger thermal performance testing demonstrated no downward trend of heat transfer since the discovery of biological activity in the CCW System.

In 2005, biofouling was observed in the SCW system. Corrective actions included chemical and mechanical cleaning of the heat exchangers. Chemicals such as glutaraldehyde and isothiazoline are added to the SCW system to control biological material. Measurement of bacteria is performed periodically to provide indications of biological activity averse to aging.

A review of CCCW heat exchanger performance testing results performed per plant procedures confirmed that the DCPP CCCW System program is capable of ensuring that the intended functions of the closed-cycle cooling water systems are not compromised by aging. Based on a review of DCPP operating experience, any chemistry parameters outside of established limits have been identified and the appropriate actions taken. Corrective actions have included increasing sampling frequencies, chemical addition, and feed and bleeds. The DCPP operating experience findings for this program identified no unique plant specific operating experience; therefore DCPP operating experience is consistent with NUREG-1801.

The CCCW System operating experience information provides objective evidence to support the conclusion that the effects of aging will be adequately managed so that the structure and component intended functions will be maintained during the period of extended operation.

Conclusion

The continued implementation of the Closed-Cycle Cooling Water program provides reasonable assurance that aging effects will be managed such that the systems and components within the scope of this program will continue to perform their intended functions consistent with the current licensing basis for the period of extended operation.

B2.1.11 Inspection of Overhead Heavy Load and Light Load (Related to Refueling) Handling Systems

Program Description

The Inspection of Overhead Heavy Load and Light Load (Related to Refueling) Handling Systems program manages the loss of material for all cranes, trolley and hoist structural components, fuel handling equipment and applicable rails within the scope of license renewal. The program is implemented through periodic visual inspections of components. Crane inspection activities verify structural integrity of the crane components required to maintain the crane intended function. Visual inspections assess conditions such as loss of material due to corrosion of structural members and visible signs of rail wear.

The inspections for the Inspection of Overhead Heavy Load and Light Load (Related to Refueling) Handling Systems program are performed using maintenance procedures. The inspection requirements are consistent with:

1) The guidance provided by NUREG-0612, *Control of Heavy Loads at Nuclear Power Plants* for load handling systems that handle heavy loads which can directly or indirectly cause a release of radioactive material.

2) Applicable industry standards (such as CMAA Specification No. 70 and ANSI B30.11) for other cranes within the scope of license renewal.

NUREG-1801 Consistency

The Inspection of Overhead Heavy Load and Light Load program is an existing program that is consistent with NUREG-1801, Section XI.M23, Inspection of Overhead Heavy Load and Light Load.

Exceptions to NUREG-1801

None

Enhancements

None

Operating Experience

Based on a review of DCPP operating experience, no occurrences of rail wear for components within the scope of the Inspection of Overhead Heavy Load and Light

Load (Related to Refueling) Handling Systems program have been identified. One instance of corrosion was identified on the intake structure gantry crane in 1993. The intake structure gantry crane is the only DCPP crane located outside, making it more susceptible to corrosion than the other DCPP cranes. The corrective actions included repair of the corrosion and installation of an enclosure around the trolley to protect hoist components. The DCPP operating experience findings for this program identified no unique plant specific operating experience; therefore DCPP operating experience is consistent with NUREG-1801. Therefore, the Inspection of Overhead Heavy and Light Load program has been effective in ensuring that DCPP cranes will continue to operate within the current DCPP licensing basis.

DCPP operating experience provides reasonable assurance that the aging effects of corrosion and wear of structural components will be adequately managed for DCPP cranes. The Inspection of Overhead Heavy and Light Load program is continually updated based on industry operating experience, research, and routine program performance.

Conclusion

The continued implementation of the Inspection of Overhead Heavy Load and Light Load (Related to Refueling) Handling Systems program provides reasonable assurance that aging effects will be managed such that the systems and components within the scope of this program will continue to perform their intended functions consistent with the current licensing basis for the period of extended operation.

B2.1.12 Fire Protection

Program Description

The Fire Protection program is a condition monitoring and performance monitoring program comprised of tests and inspections that follow the applicable National Fire Protection Association (NFPA) recommendations. The DCPP Fire Hazards Analysis provides a description of the fire potential and fire hazard for each fire area and confirms the capability of achieving and maintaining safe shutdown with a fire in any fire area/zone. Fire prevention, fire detection and suppression provisions, and fire barrier designs are described in the DCPP Fire Hazards Analysis.

The Fire Protection program manages loss of material for fire rated doors, fire dampers, lightning rods, lightning rod mounting structures, lightning rod ground connections, and the CO_2 fire suppression system; cracking, spalling, and loss of material for fire barrier walls, ceilings, and floors; and hardness and shrinkage of fire barrier penetration seals. Periodic visual inspections of credited fire barrier penetration seals, fire dampers, lightning rods, lightning rod mounting structures, lightning rod ground connections, fire barrier walls, ceilings and floors, and periodic visual condition inspections and functional tests of fire-rated doors are performed to ensure that they can perform their closure, latching, barrier functions. Inspectors will be qualified in accordance with plant procedures.

The Fire Protection program performs visual inspections on approximately 10 percent of each type of credited penetration seal at least once every 18 months. This includes all types of penetration seals (e.g., cable trays, bus ducts, conduits, seismic gaps, expansion gaps, mechanical piping, HVAC ducts piping, HVAC ducts, instrument tubing and structural steel penetrates through barriers). These inspections identify degradation such as cracking, seal separation from walls and components, separation of layers of material, loss of material and seal puncture. If any degradation is identified, an engineering evaluation of the degradation is performed. The results of the evaluation are used to determine if the degraded penetration seal is still capable of performing its intended function. If the seal is deemed to be nonfunctional, a new sample population of penetration seals shall be inspected. The population size and type are determined based on the results of the evaluation. The inspection process is continued until no additional nonfunctional seals are found in the sample population(s).

The Fire Protection program performs a visual inspection of the fire barrier walls, ceilings, and floors, including coating and wraps (raceway fire wrap and hatch covers) at least once every 18 months outside containment and at least once every

24 months inside containment, examining for any signs of aging such as cracking, spalling, and loss of material. Fire barrier inspection results are acceptable if there are no cracks, spalling, or loss of material that would prevent the barrier from performing its intended function.

The Fire Protection program performs visual inspection and closure tests on fire dampers on an 18-month basis. These inspections ensure timely detection of damage to dampers which could prevent the system from performing its intended function. Fire damper inspection results are acceptable if there are no visual indications of loss of material that would prevent the barrier from restricting air flow when tripped.

The Fire Protection Program performs a visual inspection of lightning rods, mounting structures, and ground connections at least once every five years to verify that the lightning protection system is present without damage. Lightning rod inspection results are acceptable if all the lightning rods, mounting structures, and ground connections are installed and no apparent damage exists.

The Fire Protection program performs a visual inspection and functional test, every 18 months, on fire-rated doors to verify the integrity of door surfaces and for clearances to detect aging of the fire doors prior to the loss of intended function. The visual inspection and functional test includes observation for wear, loss of material, clearances, and missing parts. Fire door inspection results are acceptable if there are no visual indications of missing parts, holes, loss of material, or wear and no deficiencies in the functional tests performed for checking clearances and proper closure.

Visual inspections are performed at least every six months through the External Surfaces Monitoring Program (B2.1.20) to identify conditions of corrosion and mechanical damage in the CO_2 flow path. A functional test of the CO_2 fire suppression system is performed every 18 months, except for turbine generator bearing No. 10 and circulating water pump high pressure CO_2 system detectors which are tested every 24 months. The functional tests require deficiencies to be corrected and retested before system restoration is complete. The corrective action process documents failures and provides operating experience for trending.

DCPP does not have permanently installed diesel driven fire pumps. DCPP has three portable diesel driven fire pumps that may be used for fire protection. The portable diesel driven fire pumps are tested quarterly to demonstrate pump operability and annually under full load/ full flow conditions. Observation of the pump during testing demonstrates the fuel supply line is clear and not degraded.

During the annual test, pressure is recorded and flow is calculated to ensure adverse performance trends are detected.

NUREG-1801 Consistency

The Fire Protection program is an existing program that, following enhancement, will be consistent with exception to NUREG-1801, Section XI.M26, Fire Protection.

Exceptions to NUREG-1801

Program Elements Affected

Scope of Program – Element 1

NUREG-1801 provides an aging management program for managing penetration seals, fire barrier walls, ceilings, and floors, fire rated doors, fire pump fuel supply lines, and the halon/CO_2 fire suppression system. The DCPP Fire Protection Program also includes lightning rods, mounting structures, and ground connections in accordance with commitments to 10 CFR 50, Appendix A, APCSB 9.5-1 and NFPA 780. The DCPP Fire Protection Program includes appropriate methods for managing the aging effects for these components to ensure the continuity of intended function.

Parameters Monitored or Inspected - Element 3 and Detection of Aging Effects - Element 4

NUREG-1801 recommends a visual inspection and functional test of the halon and CO_2 systems every six months. DCPP does not have halon fire suppression systems within the scope of license renewal. The DCPP procedures for functional testing of the CO_2 fire suppression systems are performed every 18 months. The turbine generator bearing No. 10 and circulating water pump high pressure CO_2 system detectors are tested every 24 months. A review of the past 10 years of operating experience and corrective action documentation has shown no loss of intended function between test intervals.

Enhancements

Prior to the period of extended operation, the following enhancements will be implemented in the following program elements:

Scope of Program - Element 1 and Parameters Monitored/Inspected - Element 3

Procedures will be enhanced to include inspection of all fire rated doors listed in the DCPP Fire Hazards Analysis.

Detection of Aging Effects - Element 4

Procedures will be enhanced to include qualification criteria for individuals performing inspections of fire dampers and fire doors.

Operating Experience

Operating experience at DCPP is evaluated and implemented to effectively maintain the fire protection system. This is accomplished by promptly identifying and documenting (using the corrective action program) any conditions or events that could compromise operability of fire protection components and/or structures. In addition, industry operating experience, self assessments, and independent audits provide additional input to ensure that system operability is effectively maintained.

The DCPP operating experience findings for this program identified no unique plant specific operating experience; therefore DCPP operating experience is consistent with NUREG-1801.

In 1995, DCPP implemented a penetration seal re-verification program (DCL-02-040). Approximately 10 percent of the penetration seals are being inspected at least once every refueling outage. Replacement and repair work are completed for any identified problems.

Periodic fire barrier inspections have identified mechanical damage, cracking, and holes in fire barriers. Leakage and degradation has been found in the CO_2 system. Periodic inspections have identified that cracking and chafing has been experienced in the portable diesel driven fire pump fuel lines. Corrective actions are completed in a timely manner for any identified problems.

An assessment of the DCPP Fire Protection Program was performed by DCPP Quality Verification in 2000. The purpose of the assessment was to review the program against the commitments of the Operating License Conditions for both Units 1 and 2. Overall, the assessment team found good implementation of the fire protection defense-in-depth elements, as well as compliance with 10 CFR 50, Appendix R requirements and the approved exemptions. Both the administrative and configuration control processes developed to control the program were thorough, and, in general, have been successfully implemented.

DCPP Quality Verification also performs an assessment of maintenance activities for each refueling outage. The purpose of this assessment is to verify all outage work, including fire protection, is planned, prepared, executed, and completed in accordance with established requirements. All of the results are documented in Maintenance Activities Assessment Reports.

DCPP Quality Verification performs annual, biennial, and triennial fire protection audits. The purpose of these audits is to determine if the fire protection program is satisfactorily implemented. All of the results are documented in Fire Protection Program Audit Reports.

In 2003, 2006, and 2009, NRC triennial fire protection team inspections were performed to assess the DCPP Fire Protection program for selected risk-significant fire areas. Emphasis was placed on verification of the post-fire safe shutdown capability. The inspections included evaluation of the material condition of a variety of fire areas. No findings of significance were identified.

The fire protection operating experience information provides objective evidence to support the conclusion that the effects of aging will be adequately managed during the period of extended operation.

Conclusion

Continued implementation of the Fire Protection program provides reasonable assurance that aging effects will be managed so that the structures and components within the scope of the program will continue to perform their intended functions consistent with the current licensing basis for the period of extended operation.

B2.1.13 Fire Water System

Program Description

The Fire Water System program manages loss of material due to corrosion, MIC, or biofouling for water-based fire protection systems. Internal and external inspections and tests of fire protection equipment are performed in accordance with applicable National Fire Protection Association (NFPA) codes and standards. The fire water system is managed by performing routine preventive maintenance, inspections, and testing; operator rounds, performance monitoring, and reliance on the corrective action program; and system improvements to address aging and obsolescence issues.

The following are activities performed by the Fire Water System program:

Testing:

A fire water system flow test is performed at least every three years in accordance with plant procedures meeting requirements of NFPA 25. Hydraulic pump curves are obtained and compared with baseline curves to determine operability. During the Fire Water System flow test, parameters directly monitored are static pressure and velocity head.

The Fire Water System program conducts a water flow test through each open spray nozzle to verify that deluge systems provide full coverage of the equipment it protects. The Fire Water System program will be enhanced so sprinkler heads in service for 50 years will be replaced or representative samples from one or more sample areas will be tested in accordance with NFPA 25. Test procedures will be repeated at 10-year intervals during the period of extended operation, for sprinklers that were not replaced prior to being in service for 50 years to ensure that signs of degradation, such as corrosion, are detected prior to the loss of intended function.

The Fire Water System program conducts a water flow test through each open spray nozzle of the transformer deluge system periodically to verify that each nozzle is unobstructed. Water is flowed through the test valves of the deluge system periodically to ensure freedom from blockage.

Fire water is flowed from the Raw Water Storage Reservoir periodically to verify the system piping is capable of delivering the design flow rate.

The portable diesel driven fire pumps are tested periodically under full load/full flow conditions.

DCPP performs a hydrostatic test of its indoor fire hoses at least every three years, while outdoor fire hoses are tested at least annually. Fire hoses that are inaccessible during normal plant operations are tested every refueling outage.

Inspections:

Either periodic non-intrusive volumetric examinations or visual inspections will be performed on firewater piping. Non-intrusive volumetric examinations would detect loss of material due to corrosion, and would confirm wall thickness is within acceptable limits so that aging will be detected before the loss of intended function. Visual inspections would evaluate (1) wall thickness as it applies to avoidance of catastrophic failure, and (2) the inner diameter of the piping as it applies to the design flow of the fire protection system. The volumetric examination technique employed will be one that is generally accepted in the industry, such as ultrasonic or eddy current.

The Fire Water System program performs periodic visual inspections of main fire system piping, yard loop fire hydrants, hose reel headers, hose stations, portable diesel driven fire pump hoses, fire hoses, gaskets, water spray headers, sprinkler system headers, water spray nozzles, and sprinkler heads to verify they are free of significant corrosion, foreign materials, biofouling, and physical damage.

DCPP performs a visual inspection of its indoor hose station gaskets once every 18 months, except hose stations in high radiation areas and the containment buildings which are tested during refueling outages. This inspection ensures that the gaskets have a satisfactory fit with no defects.

Fire detection instruments located in safety related power block structures, which are accessible during plant operation, are demonstrated to be operable at least once per six months by testing and surveillance activities. For fire detection instruments located in safety related power block structures which are not accessible during plant operation, operability is demonstrated during each cold shutdown exceeding 24 hours, unless performed in the last six months.

Flushes:

The Fire Water System program performs a flush semi-annually for the yard loop and underground feeds and annually for fire hydrants. Flowing water will remove accumulated debris and sediment which may impair proper valve functioning.

The Fire Water System program acceptance criteria are 1) the ability of the fire protection system to maintain required pressure, 2) no unacceptable signs of degradation, such as loss of material due to corrosion, are observed during visual

assessment of internal system conditions, and 3) no biofouling exists in the sprinkler system that could cause blockage in the sprinkler heads.

DCPP does not have permanently installed diesel driven fire pumps. DCPP has three portable diesel driven fire pumps that may be used for fire protection. The portable diesel driven fire pumps are tested quarterly to demonstrate pump operability and annually under full load/ full flow conditions. Observation of the pump during testing demonstrates the fuel supply line is clear and not degraded. During the annual test, pressure is recorded and flow is calculated to ensure adverse performance trends are detected.

NUREG-1801 Consistency

The Fire Water System program is an existing program that, following enhancement, will be consistent with exception to NUREG-1801, Section XI.M27, Fire Water System.

Exceptions to NUREG-1801

Program Elements Affected

Scope of Program - Element 1

NUREG-1801 provides a program for managing carbon steel and cast iron components in fire water systems. The Fire Water System program also manages components made from copper alloy and stainless steel exposed to water in the fire water system. The fire water system includes these materials. Visual inspections, volumetric examinations, flushes and flow tests are appropriate methods for managing the aging effects for these materials and ensure the continuity of intended function.

Detection of Aging Effects - Element 4

NUREG-1801 specifies annual hydrant hose hydrostatic tests. DCPP performs a hydrostatic test of its power block fire hoses every three years. DCPP has been performing hydrostatic testing of fire hoses on a 3-year frequency for over 10 years and no degradation leading to a loss of function has occurred.

NUREG-1801 specifies annual gasket inspections. DCPP performs gasket inspections at least once every 18 months (24 months in high radiation areas). Since aging effects are typically manifested over several years, differences in inspection and testing frequencies are insignificant. DCPP has been inspecting at an

18-month frequency for over 10 years and no degradation leading to a loss of function has occurred.

Enhancements

Prior to the period of extended operation, the following enhancements will be implemented in the following program elements:

Detection of Aging Effects - Element 4

The Fire Protection program will be enhanced so sprinkler heads in service for 50 years will be replaced or representative samples from one or more sample areas will be tested consistent with NFPA 25, *Inspection, Testing and Maintenance of Water-Based Fire Protection Systems* guidance. Test procedures will be repeated at 10-year intervals during the period of extended operation, for sprinkler heads that were not replaced prior to being in service for 50 years, to ensure that signs of degradation, such as corrosion, are detected prior to the loss of intended function.

Procedures will be enhanced for either periodic, non-intrusive volumetric examinations, or visual inspections on firewater piping. Non-intrusive volumetric examinations would detect any loss of material due to corrosion to ensure that aging effects are managed, wall thickness is within acceptable limits and degradation would be detected before the loss of intended function. Visual inspections would evaluate (1) wall thickness as it applies to avoidance of catastrophic failure, and (2) the inner diameter of the piping as it applies to the design flow of the fire protection system. The volumetric examination technique employed will be one that is generally accepted in the industry, such as ultrasonic or eddy current.

Monitoring and Trending - Element 5

The Fire Protection procedures will be enhanced to state trending requirements.

Operating Experience

Operating experience at DCPP is evaluated and implemented to effectively maintain the fire protection system. This is accomplished by promptly identifying and documenting (using the Corrective Action Program) any conditions or events that could compromise operability of fire protection components and/or structures. In addition, industry operating experience, self assessments, and independent audits provide additional input to ensure that system operability is effectively maintained.

The current system health report shows corrective actions are being completed in a timely manner, with favorable performance trending. Issues which have been identified and corrected include fire hydrant and piping corrosion and leakage.

Based on a review of DCPP operation experience, several examples of degradation or corrosion of the Fire Water System have been identified. Examples include: (1) while performing a surveillance test procedure in 2001, a fire protection valve was found frozen in the open position. The valve provides for maintenance isolation; therefore, with the valve frozen open, the system is still operable and able to perform its design function. It was determined that the position and housing indicators had corrosion and cracking and were therefore replaced. (2) During replacement of a valve on October 7, 2005, the piping between firewater storage tank 0-2 and the pump house was found to be corroded to the point of requiring repair or replacement. It was subsequently decided to replace the pipe, which was completed on October 19, 2005. (3) DCPP has replaced the main fire pumps, redesigned the transformer deluge pipe, replaced transformer deluge valve assemblies, replaced several yard loop risers, fire hydrants, flow switches, and has replaced many system valves as a result of internal inspections and valve leak problems identified during routine plant walkdowns and surveillances. The DCPP operating experience findings for this program identified no unique plant specific operating experience; therefore DCPP operating experience is consistent with NUREG-1801.

An assessment of the DCPP Fire Protection Program was performed by DCPP Quality Verification in 2000. The purpose of the assessment was to review the program against the commitments of the Operating License Conditions for both Units 1 and 2. Overall, the assessment team found good implementation of the fire protection defense-in-depth elements, as well as compliance with 10 CFR 50, Appendix R requirements and the approved exemptions. Both the administrative and configuration control processes developed to control the program were thorough, and, in general, have been successfully implemented. The automatic sprinkler and deluge systems at DCPP were in good overall condition. Some minor variances from NFPA 13 were noted during a walkdown of the turbine building sprinkler system. However, these items were not significant and would not have affected the ability of the sprinkler systems to perform as designed.

DCPP Quality Verification also performs an assessment of maintenance activities for each refueling outage. The purpose of this assessment is to verify all outage work, including fire protection, is planned, prepared, executed, and completed in accordance with established requirements. All of the results are documented in Maintenance Activities Assessment Reports.

In accordance with NRC Generic Letter 82-21, *Technical Specifications for Fire Protection Audits*, DCPP Quality Verification performs annual, biennial, and triennial fire protection audits. The purpose of these audits is to determine if the fire protection program is satisfactorily implemented. All of the results are documented in Fire Protection Program Audit Reports.

In 2003, 2006, and 2009, NRC triennial fire protection team inspections were performed to assess the DCPP Fire Protection program for selected risk-significant fire areas. No findings of significance were identified.

The fire water system operating experience information provides objective evidence to support the conclusion that the effects of aging will be adequately managed so that the component intended functions will be maintained during the period of extended operation.

Conclusion

The continued implementation of the existing Fire Water System program provides reasonable assurance that aging effects will be managed such that the systems and components within the scope of this program will continue to perform their intended functions consistent with the current licensing basis for the period of extended operation.

B2.1.14 Fuel Oil Chemistry

Program Description

The Fuel Oil Chemistry program manages loss of material due to general, pitting, crevice and microbiological influenced corrosion on the internal surface of components in the emergency diesel fuel oil storage and transfer system, portable diesel fire pump fuel oil tanks, and portable caddy fuel oil tanks. The program includes (a) surveillance and monitoring procedures for maintaining fuel oil quality by controlling contaminants in accordance with applicable ASTM Standards (ASTM D1796, D2276, and D4057), (b) periodic draining of water from fuel oil tanks, (c) visual inspection of internal surfaces during periodic draining and cleaning, (d) ultrasonic wall thickness measurements of the fuel oil storage tanks if there are indications of reduced cross sectional thickness found during the visual inspection, (e) inspection of new fuel oil before it is introduced into the fuel oil tanks, and (f) supplemental one-time inspections of a representative sample of components in systems that contain fuel oil by the One-Time Inspection program (B2.1.16).

Fuel oil quality is maintained by monitoring and controlling fuel oil contaminants in accordance with applicable ASTM Standards (ASTM D1796, D2276, and D4057). This is accomplished by periodic sampling and chemical analysis of the fuel oil inventory at the plant and sampling, testing, and analysis of new fuel oil prior to delivery and offload into the fuel oil tanks.

The Fuel Oil Chemistry program specifies the requirements for corrective actions when the fuel oil parameters are out of specification. If a sample of the new fuel oil does not meet acceptance criteria prior to offload into the diesel fuel oil storage tanks, delivery is discontinued or not allowed. All samples are taken in accordance with ASTM D4057, with the exception of the portable diesel driven fire pump fuel oil tanks and the portable caddy fuel oil tanks.

The Fuel Oil Chemistry program uses fuel additives to minimize fuel breakdown and tank corrosion. During the off-loading of new fuel oil shipments into the fuel oil tanks, DCPP adds a biocide to minimize biological activity and a fuel stabilizer/ corrosion-inhibitor to prevent biological breakdown of the diesel fuel oil and prevent tank corrosion.

Tank coatings are not credited for the prevention of any aging effects for license renewal at DCPP. The One-Time Inspection program (B2.1.16) is used to verify the effectiveness of the Fuel Oil Chemistry program.

Checking and removal of accumulated water in the diesel fuel oil storage tanks once every 31 days (monthly) eliminates the necessary environment for bacterial survival. Periodic inspection for and removal of accumulated water minimizes fouling, the amount of water, and the length of contact time of the fuel oil system. ASTM Standard D1796 is used for determination of water and sediment contamination in new diesel fuel oil prior to offload into the diesel fuel oil storage tanks.

Diesel fuel oil day tanks are checked for accumulated water every 31 days (monthly) in accordance with the DCPP Technical Specifications, and the water is removed. The fuel oil in the diesel fuel oil day tanks is analyzed quarterly for total particulate contamination in accordance with ASTM D2276 using the limits specified in the DCPP Technical Specifications.

Fuel oil from the diesel fuel oil storage tanks is analyzed every 31 days (monthly) to maintain chemical content using the limits specified in the DCPP Technical Specifications for total particulate contamination, in accordance with ASTM D2276. A diesel fuel oil storage tank bottom sample is taken quarterly, as well as a recirculation and a multilevel sample. The diesel fuel oil storage tanks are drained, cleaned, and visually inspected every 10 years to detect potential aging effects.

The Fuel Oil Chemistry program will include periodic draining, cleaning and visual inspection of the diesel fuel oil day tanks, the portable diesel driven fire pump fuel oil tanks, and portable caddy fuel oil tanks.

The Fuel Oil Chemistry program will provide for supplemental ultrasonic thickness measurements if there are indications of reduced cross sectional thickness found during the visual inspection of the diesel fuel oil storage tanks, diesel generator day tanks, portable diesel driven fire pump fuel oil tanks, and portable caddy fuel oil tanks.

NUREG-1801 Consistency

The Fuel Oil Chemistry program is an existing program that, following enhancement, will be consistent with exception to NUREG-1801, Section XI.M30, Fuel Oil Chemistry.

Exceptions to NUREG-1801

Program Elements Affected

Scope of Program - Element 1

NUREG-1801 specifies the use of ASTM Standards D1796, D2276, D2709, D6217, and D4057. DCPP only uses D1796, D2276, and D4057. The testing conducted using ASTM D1796 gives quantitative results that, together with the Technical Specification acceptance criteria, meet the intent of the ASTM D2709 method. The use of ASTM D2276, along with acceptance criteria for total particulate concentration of less than 10 mg/liter, instead of ASTM D6217, is required by DCPP Technical Specifications 5.5.13.c.

Preventive Actions - Element 2 and Monitoring and Trending - Element 5

NUREG-1801 specifies periodic removal of water in the tanks. Water is not removed from the portable diesel-driven fire pump fuel oil tanks and portable caddy fuel oil tanks. These are small tanks that do not have provisions to remove water from the tank bottoms. Consumption of fuel oil is the result of quarterly surveillance tests to run the pump for at least 30 minutes. Fuel oil is refilled into the tanks after the each test. The frequent addition of fuel oil and the annual draining and cleaning of the fuel oil tanks obviates the need for periodic water removal. New fuel oil is tested in accordance with the Fuel Oil Chemistry program prior to introduction into the portable diesel-driven fire pump fuel oil tanks and portable caddy fuel oil tanks

Parameters Monitored or Inspected - Element 3

NUREG-1801 specifies periodic sampling for particulate concentration. The fuel oil in the portable diesel-driven fire pump fuel oil tanks and portable caddy fuel oil tanks will not be analyzed for particulate concentration since the pumps are tested quarterly. The consumption of fuel oil during the quarterly surveillance test (pump run time of at least 30 minutes) would remove any particulates that accumulated in the tanks. The frequent addition of diesel fuel oil obviates the need for this sampling. Provisions do not exist to sample for particulates. New fuel oil is tested in accordance with the Fuel Oil Chemistry program prior to introduction into the portable diesel-driven fire pump fuel oil tanks and portable caddy fuel oil tanks.

Parameters Monitored or Inspected - Element 3 and Detection of Aging Effects Element 4

NUREG-1801 specifies the use of ASTM Standard D4057 for fuel oil sampling. ASTM D4057 is not used on the portable diesel-driven fire pump fuel oil tanks or

portable caddy fuel oil tanks. These tanks are too small for multi-level samples to apply. Furthermore, the pumps are tested quarterly. The consumption of fuel oil is the result of the quarterly surveillance test to run the pump for at least 30 minutes. The frequent addition of diesel fuel oil obviates the need for this sampling. New fuel oil is tested in accordance with the Fuel Oil Chemistry program prior to introduction into the portable diesel-driven fire pump fuel oil tanks and portable caddy fuel oil tanks.

Parameters Monitored or Inspected - Element 3 and Acceptance Criteria - Element 6

NUREG-1801 states that ASTM Standards D1796 and D2709 are used for determination of water and sediment contamination. DCPP uses only ASTM D1796 and not D2709. The use of ASTM D1796, along with acceptance criteria for water and sediment contamination of 0.05 volume percent, is required by DCPP Technical Specifications Bases Surveillance Requirement 3.8.3.3.c. The testing conducted using ASTM D1796 gives quantitative results that, together with the Technical Specification acceptance criteria, meet the intent of the ASTM D2709 method.

NUREG-1801 specifies the use of a filter with a pore size of 3.0 microns. DCPP uses a filter with a pore size of 0.8 microns per ASTM D2276, Method A as stated in the DCPP Technical Specifications 5.5.13.c.

Acceptance Criteria - Element 6

NUREG-1801 requires the use of ASTM D6217 for determination of particulates. DCPP uses only ASTM D2276 and not ASTM D6217. The use of ASTM D2276, along with acceptance criteria for total particulate concentration of less than 10 mg/liter, is required by DCPP Technical Specifications 5.5.13.c.

Enhancements

Prior to the period of extended operation, the following enhancements will be implemented in the following program elements:

Preventive Actions - Element 2 and Detection of Aging Effects - Element 4

Procedures for the diesel generator day tanks and the portable diesel-driven fire pump fuel oil tanks will be enhanced to include the periodic draining, cleaning, and visual inspection of the diesel generator day tanks, the portable diesel-driven fire pump fuel oil tanks, and portable caddy fuel oil tanks.

Parameters Monitored or Inspected - Element 3 and Monitoring and Trending - Element 5

Procedures for the portable diesel-driven fire pump tanks will be enhanced to include sampling of the new fuel oil prior to introduction into the portable diesel-driven fire pump tanks and portable caddy fuel oil tanks.

Detection of Aging Effects - Element 4

Procedures will be enhanced to provide for supplemental ultrasonic thickness measurements if there are indications of reduced cross sectional thickness found during the visual inspection of the diesel fuel oil storage tanks, diesel generator day tanks, portable diesel-driven fire pump fuel oil tanks, and portable caddy fuel oil tanks.

Monitoring and Trending - Element 5

Procedures for the diesel fuel oil storage tanks and the diesel generator day tanks will be enhanced to state that trending of water and particulate levels is controlled in accordance with DCPP Technical Specifications and plant procedures.

Procedures for the portable diesel driven fire pump fuel oil tanks will be enhanced to include monitoring and trending of water and sediment levels of new fuel oil for the portable diesel driven fire pump fuel oil tank and portable caddy fuel oil tanks.

Acceptance Criteria - Element 6

Procedures for the portable diesel driven fire pump fuel oil tanks will be enhanced to state acceptance criteria for new fuel oil being introduced into the portable diesel driven fire pump fuel oil tanks or portable caddy fuel oil tanks.

Operating Experience

The Fuel Oil Chemistry program has been effective in monitoring and controlling diesel fuel oil chemistry to mitigate aging effects. Based on a review of the Corrective Action Program, DCPP has taken timely and effective corrective action to address diesel fuel oil quality concerns and diesel fuel oil system performance issues when requirements were not met. The DCPP operating experience findings for this program identified no unique plant specific operating experience; therefore DCPP operating experience is consistent with NUREG-1801. Maintenance Rule Periodic Assessments and surveillance testing results have proven that the effects of aging are adequately being managed so that the intended functions are

maintained consistent with the current licensing basis for the period of extended operation.

In 1988, while performing a surveillance test procedure on the diesel generator, a fuel oil filter became clogged due to biofouling in the day tank. In response, DCPP developed and implemented a biocide, sampling, and inspection program to inhibit the growth of fungus in the diesel generator day tanks. The biofouling event was attributed to lack of sampling and biocide addition to the fuel oil.

During routine quarterly bottom samples of the diesel fuel oil storage tank 0-1 taken in March of 2000, the bulk of the samples taken appeared to be cloudy. There was no water identified in these samples. Samples were sent to an off-site laboratory for evaluation. The results indicated that the cloudiness was precipitation of boron as boric acid, which is a result from the biocide used in the fuel oil. The concentration of the biocide added was evaluated, and DCPP revised the procedure for new fuel.

In 2006, there had been several instances where DCPP noticed an increase in particulates in the fuel oil storage and day tanks. In no case did the particulate level ever exceed the Technical Specification limit of 10 mg/liter; however, samples were sent to an off-site laboratory for further evaluation. The results from the laboratory came back satisfactory. Results were entered into the chemistry database, and subsequent samples were closely monitored for any increasing trends. Later samples showed the particulate level to decrease.

Fuel oil quality parameters, including water and sediment volume percentage, are routinely monitored and maintained within acceptance limits and no adverse trends have been identified. In addition, to mitigate against corrosion, the integrity of the diesel fuel oil system is monitored by a leak detection system, which continuously monitors for fuel oil leakage in the fuel oil piping within the trenches, as well as fuel and water leakage in the diesel fuel oil transfer pump vaults and the underground diesel fuel oil tanks. No occurrence of leakage has been detected since the installation of this system in 1994, thus providing further indication that the fuel oil chemistry is maintained to prevent the loss of components' intended function.

The Fuel Oil Chemistry program operating experience information provides objective evidence to support the conclusion that the effects of aging will be adequately managed so that the structure and component intended functions will be maintained during the period of extended operation.

Conclusion

The continued implementation of the Fuel Oil Chemistry program, supplemented by the One-Time Inspection program (B2.1.16), provides reasonable assurance that

aging effects will be managed such that the systems and components within the scope of this program will continue to perform their intended functions consistent with the current licensing basis for the period of extended operation.

B2.1.15 Reactor Vessel Surveillance

Program Description

The Reactor Vessel Surveillance program manages loss of fracture toughness due to neutron embrittlement in reactor materials exposed to neutron fluence exceeding $1.0E^{17}$ n/cm^2 (E>1.0 MeV). The program is consistent with ASTM E 185-70 and ASTM E 185-73 for Units 1 and 2, respectively. Capsules are periodically removed during the course of plant operating life. Neutron embrittlement is evaluated through surveillance capsule testing and evaluation, ex-vessel neutron fluence calculations, and monitoring of reactor vessel neutron fluence. The testing program and reporting conform to requirements of 10 CFR 50 Appendix H, *Reactor Vessel Material Surveillance Program Requirements*. Data resulting from the program is used to:

- Determine pressure-temperature limits, minimum temperature requirements, and end-of-life Charpy upper-shelf energy (C_V USE) in accordance with the requirements of 10 CFR 50 Appendix G, *Fracture Toughness Requirements*; and,
- Determine end-of-life RT_{PTS} values in accordance with 10 CFR 50.61, *Fracture Toughness Requirements for Protection Against Pressurized Thermal Shock*.

The Reactor Vessel Surveillance program provides guidance for removal and testing or storage of material specimen capsules. All capsules that have been withdrawn and tested were stored.

For Unit 1, the last capsule is expected to be withdrawn during the current operating term after it has accumulated a fluence equivalent to 60 years of operation. The remaining five standby capsules have low lead factors, will remain inside the vessel throughout the vessel lifetime, and will be available for future testing.

There are no capsules remaining in the Unit 2 vessel. All capsules were removed because high lead factors produced exposures comparable to the fluence expected at the end of the period of extended operation.

DCPP Units 1 and 2 currently use ex-vessel monitoring dosimetry, which consists of four gradient chains with activation foils outside the reactor vessel, which will be used to monitor the neutron fluence environment within the beltline region.

NUREG-1801 Consistency

The Reactor Vessel Surveillance program is an existing program that is consistent with NUREG-1801, Section XI.M31, Reactor Vessel Surveillance.

Exceptions to NUREG-1801

None

Enhancements

None

Operating Experience

Reactor Vessel Surveillance program experience at DCPP is evaluated and monitored to maintain an effective program. This is accomplished by promptly identifying and documenting (using the Corrective Action Program) any conditions or events that could compromise the program. In addition, industry operating experience provides input to ensure that the program is maintained. The DCPP operating experience findings for this program identified no unique plant specific operating experience; therefore DCPP operating experience is consistent with NUREG-1801.

The Reactor Vessel Surveillance program has provided materials data and dosimetry for the monitoring of irradiation embrittlement since plant startup. The use of this program has been reviewed and approved by the NRC during the period of current operation. Surveillance capsules have been withdrawn during the period of current operation, and the data from these surveillance capsules have been used to verify and predict the performance of DCPP reactor vessel beltline materials with respect to neutron embrittlement. Calculations have been performed as required to project the reference temperature for pressurized thermal shock (RT_{PTS}) and Charpy upper-shelf energy (C_V USE) values to the end-of-license-extended (EOLE). DCPP pressure-temperature limit curves are valid up to a stated vessel fluence limit, and must be revised prior to operating beyond that limit.

Neutron Fluence

The last capsule withdrawn and tested from Unit 1 was Capsule V at the end-of-cycle (EOC) 11, which yielded an exposure less than that expected at EOLE. Capsule B will be withdrawn at 21.9 EFPY in order to capture enough fluence data for EOLE. The last capsule withdrawn and tested from Unit 2 was Capsule V at EOC 9, which yielded an exposure comparable to that expected at EOLE. The

EOLE fluence projections include the use of lower-leakage cores and the Unit 1 power uprate.

Pressurized Thermal Shock

The projected Unit 1 RT_{PTS} values did not meet the 10 CFR 50.61 screening criteria for beltline and extended beltline materials. The Unit 2 RT_{PTS} was projected to the end of the period of extended operation. The Unit 1 reactor vessel fluence will continue to be monitored as part of the Reactor Vessel Surveillance program.

Charpy Upper-Shelf Energy

The most recent coupon examination results for both units demonstrate that the DCPP reactor vessel material ages consistently with Regulatory Guide 1.99 predictions and provides a conservative means to satisfy the requirements of 10 CFR 50, Appendix G. The C_V USE values were revised with projections to the end of the period of extended operation.

The Reactor Vessel Surveillance program operating experience information provides objective evidence to support the conclusion that the effects of aging will be adequately managed so that the component intended functions will be maintained during the period of extended operation.

Conclusion

Continued implementation of the Reactor Vessel Surveillance program provides reasonable assurance that the aging effects will be managed so that the systems and components within the scope of this program will continue to perform their intended functions consistent with the current licensing basis for the period of extended operation.

B2.1.16 One-Time Inspection

Program Description

The One-Time Inspection (OTI) program conducts one-time inspections of plant system piping and components to verify the effectiveness of the Water Chemistry program (B2.1.2), Fuel Oil Chemistry program (B2.1.14), and Lubricating Oil Analysis program (B2.1.23). The aging effects to be evaluated by the One-Time Inspection program are loss of material, cracking, and reduction of heat transfer.

The DCPP OTI Program is a new program that will be implemented by DCPP prior to the period of extended operation. The DCPP OTI Program provides measures for detecting the aging effects prior to loss of intended function, but does not prevent degradation due to aging effects.

Plant system piping and components identified in the OTI procedure will be subject to OTI using inspection personnel qualified consistent with the ASME Section XI Code and 10 CFR 50, Appendix B. These inspection personnel will follow American Society of Mechanical Engineers (ASME), Boiler and Pressure Vessel Code, Section V, Nondestructive Examination (NDE), using NDE techniques appropriate to each inspection. NDE acceptance criteria will be consistent with the design codes/standards or ASME Section XI as applicable to the component for each one-time inspection.

Inspection sample sizes will be determined based on an assessment of materials of fabrication, environment, plausible aging effects and mechanisms, and operating experience. The OTI program determines NDE sample size for each material-environment group using an engineered sampling technique for each material-environment group based on criteria such as the longest service period, most severe operating conditions, lowest design margins, lowest or stagnant flow conditions, high flow conditions, and highest temperature. Component selection will be performed by the system engineer or other knowledgeable personnel. When evidence of an aging effect is revealed by a one-time inspection, the engineering evaluation of the inspection results would identify appropriate corrective actions.

The OTI inspections will be performed during the 10 years prior to the period of extended operation. All one-time inspections will be completed prior to the period of extended operation. Completion of the OTI Program in this time period will ensure that confirmation of the absence of aging effects is based upon inspection of components that have aged for at least 30 years.

Major elements of the DCPP OTI Program will include:

a) Identifying piping and component populations subject to OTI based on common materials and environments,

b) Determining the sample size of components to inspect for each material-environment group,

c) Selecting piping and components within the material-environment groups for inspection based on service period, plausible aging effects, operating conditions and design margins,

d) Conducting one-time inspections of the selected components using ASME Code Section V NDE inspection techniques and acceptance criteria effective in detecting aging effects of interest,

e) Evaluating unacceptable inspection results using the corrective action program.

NUREG-1801 Consistency

The One-Time Inspection program is a new program that, when implemented, will be consistent with NUREG-1801, Section XI.M32, One-Time Inspection.

Exceptions to NUREG-1801

None

Enhancements

None

Operating Experience

This OTI program applies to potential aging effects for which there is no operating experience indicating the need for an aging management program implementing periodic inspections. A review of DCPP-specific operating experience did not identify any age related degradation affecting system operability associated with the components managed by the Water Chemistry program, the Fuel Oil Chemistry program or the Lubricating Oil Analysis program. One-time inspections for these components will provide additional assurance that potential aging effects do not impact system operability and that periodic inspections are not warranted.

During the 10-year period prior to the period of extended operation, one time inspections will be accomplished at DCPP using ASME NDE techniques to identify possible aging effects. ASME code techniques in the ASME Section XI ISI Program are consistent with industry practice and have proven to be effective in detecting

aging effects prior to loss of intended function. The ASME Section XI ISI Program at DCPP has identified industry aging effects and has proven to maintain component structural integrity, and ensure that aging effects are discovered and repaired before the loss of component intended function. The DCPP operating experience findings for this program identified no unique plant specific operating experience; therefore DCPP operating experience is consistent with NUREG-1801.

Industry and plant-specific operating experience will be evaluated in the development and implementation of this program. As additional operating experience is obtained, lessons learned will be appropriately incorporated into the program. Based on review of the available operating experience and the strength of ASME Code NDE techniques, there is reasonable assurance that the DCPP OTI program will be capable of detecting loss of material, cracking, or reduction of heat transfer aging effects in the 10-year period prior to the period of extended operation.

Conclusion

The implementation of the One-Time Inspection program will provide reasonable assurance that aging effects will be managed such that the systems and components within the scope of this program will continue to perform their intended functions consistent with the current licensing basis for the period of extended operation.

B2.1.17 Selective Leaching of Materials

Program Description

The Selective Leaching of Materials program manages loss of material due to selective leaching for brass (>15 percent zinc), gray cast iron, and aluminum-bronze (>8 percent aluminum) components within the scope of license renewal that are exposed to raw water, including condensation, and treated water. The program provides measures for detecting the aging effects prior to loss of intended function, but does not prevent degradation due to aging effects. There is no monitoring and trending for the one-time inspection activity.

The Selective Leaching of Materials program includes a one-time visual inspection and hardness measurement or other industry-accepted mechanical inspection techniques (where feasible based on form and configuration) of selected components that may be susceptible to selective leaching to determine whether loss of material due to selective leaching is occurring. Evidence of selective leaching discovered in the initial implementation of the program is submitted for engineering evaluation. The engineering evaluation will determine whether the potential loss of material affects the ability of the components to perform their intended function. The results of the engineering evaluation will also determine the need to expand the sample size and locations for additional inspections and evaluations. Follow-up examinations or evaluations are performed as required to ensure component functionality during the period of extended operation. Industry-accepted mechanical methods of testing for selective leaching may include scraping or chipping of the surfaces.

The Selective Leaching of Materials program is a new program and the inspections will be completed within the 10-year period prior to the period of extended operation.

NUREG-1801 Consistency

The Selective Leaching of Materials program is a new program that, when implemented, will be consistent with NUREG-1801, Section XI.M33, Selective Leaching of Materials.

Exceptions to NUREG-1801

None

Enhancements

None

Operating Experience

The Selective Leaching of Materials program is a new program at DCPP. Therefore, there is no plant-specific operating experience for program effectiveness. Industry operating experience that forms the basis for this program is included in the operating experience element of the corresponding NUREG-1801, aging management program description. The DCPP operating experience findings for this program identified no unique plant specific operating experience; therefore DCPP operating experience is consistent with NUREG-1801. The only plant operating experience identified in the review was the response to NRC Information Notice 94-59, *Accelerated Dealloying of Cast Aluminum-Bronze Valves Caused by Microbiologically Induced Corrosion,* which documented an evaluation that was completed for selective leaching. Upon completing the evaluation, DCPP concluded that biocide injection, periodic inspection and cleaning had been maintaining the affected components operable. In 1997, signs of selective leaching were noted on three valves in the auxiliary saltwater system. Polished counterweights and housings were installed to slow the rate of de-alloying. Subsequent visual inspections of the subject valves, performed every 18 months, have not identified any selective leaching issues since this implementation. Therefore, the existing plant maintenance practices have proven to be adequate for identification of selective leaching and periodic inspections of valves susceptible to selective leaching.

Industry and plant-specific operating experience will be evaluated in the development and implementation of this program. As additional industry and applicable plant-specific operating experience become available, the operating experience will be evaluated and appropriately incorporated into the program through the DCPP Corrective Action Program and Operating Experience Program. This ongoing review of operating experience will continue throughout the period of extended operation, and the results will be maintained on site. This process will confirm the effectiveness of this new program by incorporating applicable operating experience and performing self assessments of the program.

Conclusion

The implementation of the Selective Leaching of Materials program will provide reasonable assurance that aging effects will be managed such that the systems and components within the scope of this program will continue to perform their intended functions consistent with the current licensing basis for the period of extended operation.

B2.1.18 Buried Piping and Tanks Inspection

Program Description

The Buried Piping and Tanks Inspection program manages cracking, loss of material, and change in surface conditions of buried components in the auxiliary saltwater system, diesel generator fuel transfer system, fire protection system, and the makeup water system. Visual inspections monitor the condition of protective coatings and wrappings found on steel components and directly assess the surface condition of stainless steel and asbestos cement components with no protective coatings or wraps. Evidence of damaged wrapping or coating defects is an indicator of possible age-related degradation to the external surface of the components. The presence of discolorations, discontinuities in surface texture, cracking, crazing or loss of material of unwrapped stainless steel and asbestos cement components is an indicator of possible corrosion damage to the external surface of the components. Any inspection that indicates a potential degraded condition will result in the initiation of corrective actions for further engineering evaluation of the condition of any coating, wrapping and component surface condition in accordance with the DCPP Corrective Action Program. The engineering evaluation may specify additional inspection techniques to evaluate the degree and extent of degradation. The Buried Piping and Tanks Inspection program requires consideration of the results of previous inspections and those sections of piping with a prior history of aging related issues so that areas susceptible to age-related degradation will be properly identified for attention during future inspections. In addition, selective leaching, which is an applicable aging effect for buried gray cast iron components, is managed by the Selective Leaching of Materials program (B2.1.17).

The Buried Piping and Tanks Inspection program is a new program that will be implemented prior to the period of extended operation. Within the 10-year period prior to entering the period of extended operation, an opportunistic or planned inspection will be performed. Upon entering the period of extended operation the DCPP Buried Piping and Tanks Inspection program will require a planned inspection within 10 years unless an opportunistic inspection has occurred within this 10-year period.

DCPP procedures will implement the DCPP Buried Piping and Tanks Inspection program. Under the DCPP Buried Piping and Tanks Inspection program, buried piping and tanks will be inspected opportunistically as they are excavated or on a planned basis if opportunistic inspections are not available.

NUREG-1801 Consistency

The Buried Piping and Tanks Inspection program is a new program that, when implemented, will be consistent with exception to NUREG-1801, Section XI.M34 Buried Piping and Tanks Inspection.

Exceptions to NUREG-1801

Program Elements Affected

Scope of Program - Element 1 and Parameters Monitored/Inspected - Element 3

NUREG-1801, Section XI.M34 program scope provides for management of buried steel piping and components. However, DCPP includes buried stainless steel and asbestos cement piping in the scope of this aging management program because such components are physically present in the plant. This program uses visual inspection of external surfaces which is an effective aging management method.

Scope of Program - Element 1, Preventive Actions - Element 2, Parameters Monitored/Inspected - Element 3, Detection of Aging Effects - Element 4 and Acceptance Criteria - Element 6

NUREG-1801, Section XI.M34 program addresses coatings and wrappings on buried pipe and tanks. Buried piping that is not coated or wrapped will be visually inspected. Visual inspections on stainless steel piping that is not coated or wrapped will be performed to detect loss of material due to general, pitting, crevice, and microbiologically influenced corrosion. Also, visual inspections of buried asbestos cement piping that is not coated or wrapped will be performed to detect evidence of cracking, loss of material and material changes in surface condition. Visual inspection has proven to be an effective technique to identify cracking, loss of material and changes in surface conditions. Indications of changes in surface conditions include discoloration and visible changes in surface texture.

Enhancements

None

Operating Experience

The DCPP Buried Piping and Tanks Inspection program is a new program; therefore, plant-specific operating experience to verify the effectiveness of the program is not available. Industry operating experience that forms the basis for this program is included in the operating experience element of the corresponding NUREG-1801, Section XI.M34. The DCPP operating experience findings for this

program identified no unique plant specific operating experience; therefore DCPP operating experience is consistent with NUREG-1801.

The original diesel fuel oil storage and transfer system (DFO) piping was replaced in 1993 and 1994 due to external corrosion. Inadequate application of a protective coal tar external coating and inadequate trench drainage were cited as the root causes. The piping was replaced with externally coated seamless carbon steel pipe. The majority of the new pipe was installed in a covered concrete pipeway (trench). Due to this method of construction, no portion of the new DFO transfer system piping is in contact with the soil, and is as such no longer subject to degradation methods associated with a soil environment. The DFO tanks were replaced in 1996 and 1997 to meet California State environmental regulations requiring at least double wall tanks. The new tanks are triple layered and incorporate an engineered fiberglass coating instead of traditional wrappings. The fuel oil tanks and associated piping are equipped with a leak detection system.

In April 1997 and January 1998, for Unit 1 and 2 respectively, a portion of the auxiliary saltwater (ASW) supply piping near the intake structure was replaced. The new ASW piping is routed such that it is supported by the soil and is generally buried at a shallower depth than the original piping. The replacement piping has an internal/external coating system that provides corrosion protection. The replacement piping also has a cathodic protection system that provides a back-up means against corrosion.

Periodic assessments of the effectiveness of the Maintenance Rule as it relate to the buried piping and tanks are performed per plant procedures. Available data on industry operating experience with regard to degradation of the buried piping and tanks are reviewed. The results of periodic assessments and industry experience reviews indicate that the DCPP buried piping and tanks are capable of performing their intended functions. Plant procedures have confirmed that the buried piping and tanks are capable of performing their intended functions.

DCPP Buried Piping and Tanks Inspection program will be effective at managing aging effects of passive components included in its scope through the period of extended operation. Identification of previous weaknesses, and subsequent corrective actions, in conjunction with recent assessments where no issues or findings were noted, provides reasonable assurance that the program will remain effective for managing aging effects in buried piping and tanks.

As additional industry and applicable plant-specific operating experience become available, the operating experience will be evaluated and incorporated into the program through the DCPP Corrective Action Program and Operating Experience

Program. This ongoing review of operating experience will continue throughout the period of extended operation, and the results will be maintained on site. This process will confirm the effectiveness of this new program by incorporating applicable operating experience and performing self-assessments of the program.

Conclusion

The implementation of the Buried Piping and Tanks Inspection program will provide reasonable assurance that aging effects will be managed such that the systems and components within the scope of this program will continue to perform their intended functions within the current licensing basis for the period of extended operation.

B2.1.19 One-Time Inspection of ASME Code Class 1 Small-Bore Piping

Program Description

The One-Time Inspection of ASME Code Class 1 Small-Bore Piping program manages cracking of ASME Code Class 1 piping less than or equal to four inches nominal pipe size (NPS 4). This program is implemented as part of the fourth interval of the DCPP Inservice Inspection (ISI) program.

For ASME Code Class 1 small-bore piping, the ISI program requires volumetric examinations on selected butt weld locations to detect cracking. Weld locations are selected based on the guidelines provided in EPRI TR-112657, *Revised Risk-Informed Inservice Inspection Evaluation Procedure*. Volumetric examinations are conducted in accordance with ASME Section XI with acceptance criteria from Paragraph IWB-3000 and IWB-2430. The fourth interval of the ISI program at DCPP, beginning in 2015 for Unit 1 and 2016 for Unit 2, will provide the results for the one-time inspection of ASME Code Class 1 small-bore piping. Currently, a reliable and effective volumetric examination to detect cracking in socket welds and piping less than NPS 1 is not available. The DCPP ISI program performs periodic VT-2 visual examinations of ASME Class I piping socket welds and piping less than NPS 1 during each refueling outage. DCPP has not experienced cracking of ASME Code Class 1 small bore pipe butt welds less than or equal to NPS 4.

In conformance with 10 CFR 50.55a(g)(4)(ii), the DCPP ISI Program is updated each successive 120 month inspection interval to comply with the requirements of the latest edition of the ASME Code specified twelve months before the start of the inspection interval.

DCPP inspects ASME Code Class 1 piping less than or equal to NPS 4 through the RI-ISI Program. To determine the selection of elements for examination, degradation mechanisms were assessed and a consequence evaluation was completed in order to perform a risk ranking of the piping segments within the scope of the RI-ISI program. A risk matrix was created with categories for high, medium and low risk. Elements for examination were selected such that 25 percent of the elements in the high risk category were selected, 10 percent of the elements in the medium risk region were selected, and no elements from the low risk region were selected.

The RI-ISI Program for pipe welds employs the EPRI methodology as described in EPRI Topical Report TR 112657, Revision. B. The selection for examination of specific elements within a segment is based on the degradation mechanism, as well as inspection cost, radiation exposure and accessibility. Other considerations that

go into the element selection process are inspectability, distribution of inspections among systems and segments, plant specific inspection results, and repairs to remedial measures which have been implemented.

NUREG-1801 Consistency

The One-Time Inspection of ASME Code Class 1 Small-Bore Piping program is an existing program that is consistent with exception to NUREG-1801, Section XI.M35, One-Time Inspection of ASME Code Class 1 Small-Bore Piping.

Exceptions to NUREG-1801

Program Elements Affected

Scope of Program - Element 1

NUREG-1801 recommends the use of EPRI Report 1000701, *Interim Thermal Fatigue Management Guideline* (MRP-24), January 2001, for identifying piping susceptible to potential effects of thermal stratification or turbulent penetration. The DCPP risk-informed process examination requirements are performed consistent with EPRI TR-112657, *Revised Risk-Informed Inservice Inspection Evaluation Procedure*, Revision B, instead of EPRI Report 1000701. Guidelines for identifying piping susceptible to potential effects of thermal stratification or turbulent penetration that are provided in EPRI Report 1000701 are also provided in EPRI TR-112657. The recommended inspection volumes for welds in EPRI Report 1000701 are identical to those for inspection of thermal fatigue in RI-ISI programs; thus, the DCPP risk-informed process examination requirements meet the recommendations of NUREG-1801. The NRC accepted DCPP's use of EPRI TR-112657 in a letter to PG&E dated November 8, 2001.

Enhancements

None

Operating Experience

Operating experience at DCPP is evaluated and implemented to ensure ASME Code Class 1 small-bore pipes are maintained within acceptable limits. This is accomplished by promptly identifying and documenting (using the corrective action program) any conditions that indicate degradation. In addition, industry operating experience, self assessments and independent audits provide additional input to ensure that program effectiveness is maintained.

A review of plant-specific operating experience indicates no cracking has been observed for ASME Code Class 1 small-bore pipe butt welds less than or equal to NPS 4. Although not within the scope of this program, the following two examples identify weld cracking at DCPP:

1) A cracked weld coupling on a pressurizer level instrument capillary fill line evaluation concluded that the crack was due to a lack of fusion to the tubing and previous metal removal. New tubing was installed.

2) A 4-inch excess letdown piping reducer segment socket weld showed a crack indication. The evaluation concluded that the likely cause was due to inter-granular stress corrosion cracking caused by sensitization of the base metal as a result of the initial weld process. The piping was replaced and a fatigue resistant weld was used.

Follow-up inspections at these locations have not identified any further evidence of weld cracking. This demonstrates the effectiveness of the DCPP Corrective Action program.

Inservice Inspection Reports for the Second Interval were reviewed for Unit 1 Refueling Outages 10, 11, 12 and 13 and Unit 2 Refueling Outages 10, 11, 12 and 13. There were no reportable indications for small-bore piping observed.

The DCPP operating experience findings for this program identified no unique plant specific operating experience; therefore DCPP operating experience is consistent with NUREG-1801. Should evidence of significant aging be revealed by the one-time inspection, periodic inspections will be implemented.

Based on a review of operating experience, cracking of ASME Code Class 1 small-bore pipe butt welds less than or equal to NPS 4 has not been observed. This provides confidence that the One-Time Inspection of ASME Code Class 1 Small-Bore Piping program is adequate to assure that aging of ASME Code Class 1 piping is not occurring and component intended functions will be maintained during the period of extended operation.

Conclusion

The continued implementation of the One-Time Inspection of ASME Code Class 1 Small-Bore Piping program provides reasonable assurance that aging effects will be managed such that the systems and components within the scope of this program will continue to perform their intended functions consistent with the current licensing basis for the period of extended operation.

B2.1.20 External Surfaces Monitoring Program

Program Description

The External Surfaces Monitoring Program manages loss of material for external surfaces of steel, aluminum, copper alloy components and elastomers, and hardening and loss of strength for elastomers. The program is a visual monitoring program that includes those systems and components within the scope of license renewal. When appropriate for the component configuration and material, physical manipulation of elastomers is used to augment visual inspections to confirm the absence of hardening or loss of strength.

The External Surfaces Monitoring program will provide clarification for areas, or portions of systems or components, that may be exempted from walkdown inspections based on physical or environmental constraints.

The External Surfaces Monitoring program may be credited with managing loss of material from internal surfaces for situations in which material and environment combinations are the same for internal and external surfaces such that external surface condition is representative of internal surface condition.

The External Surfaces Monitoring program is a monitoring program that provides measures for detecting the aging effects prior to loss of intended function, but does not prevent degradation due to aging effects.

The External Surfaces Monitoring Program manages aging for external surfaces that are not within the scope of the following programs:

1.) Boric Acid Corrosion program (B2.1.4) for components in a system with treated borated water or reactor coolant environment in which boric acid corrosion may occur

2.) Buried Piping and Tanks Inspection program (B2.1.18) for buried components

3.) Structures Monitoring Program (B2.1.32) for civil structures, and other structural items which support and contain mechanical and electrical components

4.) Fire Protection program (B2.1.12) for the CO_2 fire suppression system components.

Personnel performing external surfaces monitoring inspection will be qualified in accordance with DCPP-controlled procedures and processes.

The External Surfaces Monitoring Program will be implemented within the context of the System Engineering Program. Routine system walkdowns are required by the System Engineering Program to perform inspection on components. External surface inspections will be performed on passive components in scope for license renewal at intervals no longer than once per refueling cycle except for those inspections pertaining to the fire protection CO_2 system. The inspection interval for the passive fire protection CO_2 system components in scope for license renewal will be no longer than once every six months as discussed in the Fire Protection program (B2.1.12) for the CO_2 fire suppression system components. The program will include periodic visual inspections for loss of material, leakage, and conditions indicating elastomer hardening and loss of strength. Visual inspection parameters for metals and non-metals will be specified in walkdown procedures.

The External Surfaces Monitoring program will require that completed inspection documentation be reviewed by an engineer and retained for historical information and trending. Trending of inspection results will be performed to the extent reasonably practicable.

The External Surfaces Monitoring program will include inspection criteria for metals and non-metals that list general conditions that should be identified as discrepancies in the DCPP corrective action program. This listing will serve as acceptance criteria.

NUREG-1801 Consistency

The External Surfaces Monitoring Program is a new program that, when implemented, will be consistent with exception to NUREG-1801, Section XI.M36, External Surfaces Monitoring Program.

Exceptions to NUREG-1801

Program Elements Affected

Scope of Program - Element 1, Parameters Monitored/Inspected – Element 3, and Detection of Aging Effects - Element 4

NUREG-1801, Section XI.M36 provides a program of inspection of the external surfaces of steel components. DCPP has expanded the scope of materials inspected to include aluminum, copper alloy and elastomers. The integrated plant assessment performed as part of license renewal identified the presence of these materials in the external surfaces of components within the scope of license renewal. Therefore, the scope of the program has been expanded to manage the external surfaces of those materials as well as the external surfaces of steel. The

use of visual inspection to detect loss of material of aluminum, copper alloy and elastomer surfaces is an effective method for these materials.

NUREG-1801, Section XI.M36 provides aging management due to loss of material and leakage. The scope of this program is being expanded to include aging management due to elastomer hardening and loss of strength.

NUREG-1801, Section XI.M36 provides for a program of visual inspection. DCPP provides visual inspection as a primary inspection method augmented by manipulation of elastomers when appropriate to the component material and design. Manipulation of elastomers is an effective method to augment in the visual inspection of elastomers.

Enhancements

None

Operating Experience

The External Surfaces Monitoring Program is a new program; therefore, plant-specific operating experience to verify the effectiveness of the program is not available. However, routine system walkdowns by system engineers are performed as part of the DCPP System Engineering Program. The DCPP Corrective Action Program (CAP) is used in conjunction with the system walkdowns to identify and resolve issues pertaining to plant equipment. Since implementation of the System Engineering Program in 1993, walkdowns by system engineers have identified numerous degraded conditions on plant equipment external surfaces. These conditions were documented in the CAP and corrected in a timely manner, showing the effectiveness of the current program to detect and correct age related degradation.

As additional Industry and applicable plant-specific operating experience become available, the operating experience will be evaluated and appropriately incorporated into the new external surfaces inspection program through the DCPP CAP and Operating Experience Program. This ongoing review of operating experience will continue throughout the period of extended operation and the results will be maintained on site. This process will confirm the effectiveness of this new program by incorporating applicable operating experience and performing self-assessments of the program.

NRC Inspection Reports dated September 12, 1997 and March 20, 1998 noted that the external condition of observed structures, systems and components in various parts of the plant were visually free of external corrosion. Some minor oil and water

leaks were observed, but the external condition of affected structures, systems, and components appeared to be well maintained. Additional plant-specific operating experience and associated lessons learned will be incorporated into the External Surfaces Monitoring Program and procedures, as appropriate, during the 10 years prior to the beginning of extended operation. The CAP has proven to be effective in maintaining the material condition of the plant systems, and will continue to do so through the period of extended operation. The DCPP operating experience findings for this program identified no unique plant specific operating experience; therefore DCPP operating experience is consistent with NUREG-1801.

Conclusion

The implementation of the External Surfaces Monitoring Program will provide reasonable assurance that aging effects will be managed such that the systems and components within the scope of this program will continue to perform their intended functions consistent with the current licensing basis for the period of extended operation.

B2.1.21 Flux Thimble Tube Inspection

Program Description

The Flux Thimble Tube Inspection program manages loss of material by performing wall thickness eddy current testing of all flux thimble tubes that form part of the reactor coolant system pressure boundary. The pressure boundary includes the length of the tube inside the reactor vessel out to the seal fittings outside the reactor vessel. Eddy current testing is performed on the portion of the tubes inside the reactor vessel. The Flux Thimble Tube Inspection program does not prevent degradation due to aging effects but provides measures for inspection and evaluation to detect the degradation prior to loss of intended function. The program implements the recommendations of NRC Bulletin 88-09, *Thimble Tube Thinning in Westinghouse Reactors*.

All flux thimble tubes are currently inspected during each refueling outage. Wall thickness measurements are trended and wear rates are calculated. If the current measured wear exceeds the acceptance criteria or the predicted wear (as a measure of percent through wall) for a given flux thimble tube is projected to exceed the established acceptance criteria for wall thickness prior to the next refueling outage, corrective actions are taken to reposition, cap, or replace the tube. Program documentation maintains details regarding the core location, wear location, and the number of times a tube has been previously repositioned or replaced. Any thimble tube exhibiting an abnormally high wear rate is capped or replaced. Design changes are also implemented to use more wear-resistant thimble tube materials (e.g., chrome-plated stainless steel). The inspection frequency may be revised as appropriate based upon items such as operating experience and recommendations from the Westinghouse Owner's Group.

NUREG-1801 Consistency

The Flux Thimble Tube Inspection program is an existing program that is consistent with NUREG-1801, Section XI.M37, Flux Thimble Tube Inspection.

Exceptions to NUREG-1801

None

Enhancements

None

Operating Experience

In response to NRC Bulletin 88-09, DCPP implemented a flux thimble tube inspection program. Compliance with this inspection program and implemented corrective actions shows that current testing and inspections are effectively managing aging effects of the flux thimble tubes.

A review of the results of these inspections shows that some flux thimble tube loss of material has been identified in each inspection campaign. The DCPP operating experience findings for this program identified no unique plant specific operating experience; therefore DCPP operating experience is consistent with NUREG-1801. Corrective actions taken at DCPP in response to the results of the inspections have included repositioning 32 thimble tubes, capping six thimble tubes, and replacing 36 thimble tubes. In 2006, a thimble tube in DCPP Unit 2 had a through-wall failure. After the failure, the DCPP Thimble Tube Inspection program was revised to add additional actions to prevent a recurrence of this event. These actions include (1) cap or replace a thimble tube which exhibits a wear rate greater than 25 percent/year, (2) cap or replace a thimble tube which has two wear scars greater than 40 percent through-wall and (3) cap or isolate a thimble tube which is chrome plated and has been repositioned greater than eight inches. These actions have been effective in preventing any new through-wall failures since.

Based on corrective actions taken to identify aging issues discussed above, the Flux Thimble Tube Inspection program is effective at managing loss of material of the flux thimble tubes. The Flux Thimble Tube Inspection program operating experience information provides objective evidence to support the conclusion that the effects of aging will be adequately managed so that the component intended functions will be maintained during the period of extended operation.

Conclusion

The continued implementation of the Flux Thimble Tube Inspection program provides reasonable assurance that aging effects will be managed such that the systems and components within the scope of this program will continue to perform their intended functions consistent with the current licensing basis for the period of extended operation.

B2.1.22 Inspection of Internal Surfaces in Miscellaneous Piping and Ducting Components

Program Description

The Inspection of Internal Surfaces in Miscellaneous Piping and Ducting Components program manages cracking, loss of material, change in material properties and hardening and loss of strength of the internal surfaces of piping, piping components, ducting and other components that are not within the scope of other aging management programs. The program will also address the management of aging internal surfaces of miscellaneous piping and ducting components that are inaccessible during both normal operations and refueling. Components are considered inaccessible if they are in a high-radiation area or have a physical constraint or other condition that would render examination impractical by exposing plant personnel to undue hazards. For components inaccessible due to either physical constraint or personnel hazards, components of like materials and environments may be examined as alternatives with documented justification for their use. If the examination of an alternate component finds degradation, an evaluation will justify whether the inaccessible component is acceptable for further service.

The Inspection of Internal Surfaces in Miscellaneous Piping and Ducting Components program is a new program that will use the work control process for preventive maintenance and surveillance to conduct and document inspections. The program will perform visual inspections to detect aging effects that could result in a loss of component intended function. Visual inspections of internal surfaces of plant components will be performed by qualified personnel during the conduct of periodic maintenance, predictive maintenance, surveillance testing and corrective maintenance. Additionally, visual inspections may be augmented by physical manipulation to detect hardening and loss of strength of both internal and external surfaces of elastomers. The program also includes volumetric evaluation to detect stress corrosion cracking of the internal surfaces of stainless steel components exposed to diesel exhaust.

Prior to the period of extended operation, a new procedure will be implemented to direct opportunistic and supplemental inspections of the internal surfaces of components that are within the scope of this program. This program will be initiated prior to entering the period of extended operation and will provide for periodic inspection of a representative sample of the internal surfaces material and environment combinations for systems within the scope of this program. The internal surfaces inspections will normally be performed through scheduled

preventive maintenance and surveillance inspections such that work opportunities will be sufficient to detect aging and provide reasonable assurance that intended functions are maintained. Supplemental inspections not performed concurrently with planned work activities may also be performed. The locations and intervals for these supplemental inspections will be based on assessments of the potential for degradation which could lead to loss of intended function, and on current industry and plant-specific operating experience.

NUREG-1801 Consistency

The Inspection of Internal Surfaces in Miscellaneous Piping and Ducting Components program is a new program that, when implemented, will be consistent with exception to NUREG-1801, Section XI.M38, Inspection of Internal Surfaces in Miscellaneous Piping and Ducting Components.

Exceptions to NUREG-1801

Program Elements Affected

Scope of Program - Element 1 and Detection of Aging Effects - Element 4

NUREG-1801, Section XI.M38 provides a program of inspections of the internal surfaces of miscellaneous steel, which includes cast iron and gray cast iron, piping and ducting components. The Inspection of Internal Surfaces in Miscellaneous Piping and Ducting Components program will also manage components made from aluminum, asbestos cement, copper alloy (greater than 15 percent zinc), copper alloy (less than 15 percent zinc), elastomers, nickel alloys, stainless steel, and stainless steel (cast austenitic). Visual inspections performed by qualified personnel have been found to be an effective method for detecting and monitoring pitting and crevice corrosion in stainless steels, general, pitting, and crevice corrosion in non-ferrous metals, and loss of material, cracking, and changes in surface condition in asbestos cement piping and elastomers.

Scope of Program - Element 1, Parameters Monitored/Inspected - Element 3, Detection of Aging Effects - Element 4 and Monitoring and Trending - Element 5

NUREG-1801, Section XI.M38 provides a program of visual inspections of the internal surfaces of miscellaneous piping and ducting components. The Inspection of Internal Surfaces in Miscellaneous Piping and Ducting Components program will include visual inspections and additional techniques such as volumetric testing of stainless steel to detect stress corrosion cracking, and will also include physical manipulation of elastomers both internally and externally where appropriate to the component configuration and material in order to detect hardening and loss of

strength. Physical manipulation is an effective method of detecting aging effects in elastomers.

Enhancements

None

Operating Experience

The Inspection of Internal Surfaces in Miscellaneous Piping and Ducting Components program is a new program at DCPP. Therefore, there is no plant-specific operating experience available from this new program to evaluate effectiveness. However, based on a review of DCPP operating experience, instances of internal valve degradation and internal pipe rust have been identified during periodic maintenance, surveillance, testing, and corrective maintenance activities. The findings have been documented and corrected in a timely manner using the DCPP Corrective Action Program (CAP), which include a determination of needed repairs and mitigating actions for affected components. These records provide evidence of DCPP using opportunities to conduct internal inspections during normal plant activities and showed the CAP was effective in resolving reported problems.

The following is a summary of plant operating experience. A majority of the affected components have involved valves, which usually required disassembly and cleaning of the seats to correct sticking and seat leakage. For example, most valves disassembled had some carbon or dirt residue on the seating surfaces that affected tight shutoff. Once the cleaning was completed, the surfaces were found to be in an acceptable condition and the valve functioned properly after reassembly. In a few cases, extensive corrosion was found, requiring rebuilding or replacement of the valves. Other internal surfaces inspected, such as valve bodies and piping sometimes showed corrosion, but were reusable after cleaning in most cases. The DCPP operating experience findings for this program identified no unique plant specific operating experience; therefore DCPP operating experience is consistent with NUREG-1801.

As additional Industry and applicable plant-specific operating experience become available, the operating experience will be evaluated and appropriately incorporated into the new internal surfaces inspection program through the DCPP CAP and Operating Experience Program. This ongoing review of operating experience will continue throughout the period of extended operation and the results will be maintained on site. This process will confirm the effectiveness of this new program by incorporating applicable operating experience and performing self-assessments of the program.

Conclusion

The implementation of the Inspection of Internal Surfaces in Miscellaneous Piping and Ducting Components program will provide reasonable assurance that aging effects will be managed such that the systems and components within the scope of this program will continue to perform their intended functions consistent with the current licensing basis for the period of extended operation.

B2.1.23 Lubricating Oil Analysis

Program Description

The Lubricating Oil Analysis program manages the quality of lubricating oil in mechanical systems within specified limits. The program provides for sampling and analysis to maintain lubricating oil contaminants, primarily water and particulates, within acceptable limits. The program includes acceptance criteria based on vendor or industry guidelines. Additionally, ferrography may be performed on oil samples for trending of wear particle concentrations (WPC). Existing plant procedures implement sampling methods and frequency. A new plant procedure will specify lubricant test methods and lubricant test data evaluation requirements for in-scope equipment. Sampling schedules are established and maintained within the Preventative Maintenance Programs.

The One-Time Inspection program (B2.1.16) will be used to verify the effectiveness of the Lubricating Oil Analysis program.

The DCPP Lubricating Oil Analysis program is a condition based program supported by oil analysis test results. Testing is based on equipment type.

NUREG-1801 Consistency

The Lubricating Oil Analysis program is an existing program, that following enhancement, will be consistent with exception to NUREG-1801, Section XI.M39, Lubricating Oil Analysis.

Exceptions to NUREG-1801

<u>Program Elements Affected</u>

Parameters Monitored/Inspected - Element 3

NUREG-1801, Section XI.M39 program recommends that lubricating oil in components that are not subject to periodic oil changes also be tested for flash point in order to verify suitability for continued use. DCPP does not perform flash point testing on industrial oil applications. DCPP measures fuel dilution by gas chromatography on internal combustion engine applications where the potential exists for contamination by fuel oil. Fuel dilution by gas chromatography accomplishes the same goal as the flash point test by determining the percent by volume of fuel in the oil. For lubricating oil systems not associated with internal combustions engines, lubricating oil flash point change is unlikely.

Enhancements

Prior to the period of extended operation, the following enhancements will be implemented in the following program elements:

Scope of Program – Element 1

A new procedure will be developed to govern the Lubricating Oil Analysis program testing, evaluation, and disposition for in-scope equipment.

Preventive Actions - Element 2

DCPP will include procedural guidance for oil sampling and analysis for chemical and physical properties.

Parameters Monitored/Inspected - Element 3

DCPP will specify standard analyses that will be performed on oils in a new procedure.

Detection of Aging Effects - Element 4 and Acceptance Criteria - Element 6

DCPP acceptance criteria for each of the lubricating oils commonly used on-site, including the oils associated with the equipment within the scope of the Lubricating Oil Analysis program will be included in a new procedure. DCPP acceptance criteria for lubricating oil analysis will be derived from original equipment manufacturer (OEM) vendor manuals, industry guidance, and the advice of qualified offsite laboratories.

Monitoring and Trending - Element 5

DCPP will include trending in a new procedure.

Corrective Actions - Element 7

A new procedure will state actions to address conditions where action limits are reached or exceeded.

Operating Experience

Lubricating oil analysis at DCPP manages the quality of lubricating oil in mechanical systems. This is accomplished by promptly identifying and documenting (using the Corrective Action Program) any conditions or events that could compromise the intended functions of mechanical components containing lubricating oil. Industry

operating experience and self assessments provide input to ensure that the program is maintained.

Lubricating oil analysis has been performed at DCPP to detect degraded equipment and oil conditions. DCPP operating experience has been reviewed to identify degraded oil conditions and the corrective actions implemented as a result of lubricating oil showing degraded conditions.

The following examples of operating experience provide objective evidence that the Lubricating Oil Analysis program will be effective in assuring that intended functions will be maintained consistent with the current licensing basis for the period of extended operation:

A review of the lubricating oil analysis experience at DCPP identified that the program has been effective at detecting abnormal or degraded conditions of lubricating oil in plant equipment. Corrective actions have been taken prior to equipment failures, with one exception. In March 1997, the reactor tripped on low-low steam generator level due to a feedwater transient initiated by the failure of main feedwater pump 2-1 to respond to controls. The loss of control was caused by filter fouling of the control oil system. The root cause was contaminated oil. Even though routine oil sample analysis was satisfactory, the control oil screens showed rust, dirt, and a few wear metals. Corrective actions initiated as a result of degraded or abnormal conditions identified by the Lubricating Oil Analysis program have include bearing replacement, leaking oil cooler replacement, replacing leaking gaskets, filtering oil systems, oil replacement, and more frequent oil sampling,

Due to the March 1997 failure of the main feedwater pump (although not in scope for license renewal) to trip, planned maintenance and predictive maintenance systems were improved to ensure proper operation of the main feedwater pump control oil system. Included were tighter quality requirement for the control oil system and increased testing requirements. Operating experience with the Lubricating Oil Analysis program demonstrates that DCPP was successful in applying the lessons learned from this incident to improve the Lubricating Oil Analysis program.

Another example of lubricating oil analysis corrective actions involve auxiliary saltwater pump 2-1 had abnormal lubrication oil sample results. Test results indicated an excessively high particle count. Visible debris was also observed. This was the first oil sample collected since the motor was changed out in refueling outage 2R14 in 2008. The analysis most likely reflects a combination of contaminants including those introduced during the overhaul, wear particles that developed as a result of the contamination and break-in wear. An engineering evaluation determined that these results are not indicative of a condition that would

jeopardize the motor being able to perform its safety function, but if uncorrected, would shorten the service life and impact long term reliability. Therefore, the oil was changed and sampled to confirm results and establish trends. Subsequent tests were conducted. The subsequent tests confirmed that the trend is not negative. Corrective actions have been implemented to prevent contamination in future motor overhauls. DCPP continues to monitor oil samples.

Based on a review of DCPP operating experience, degradation of lubricating oil systems that has been identified has been consistent with industry experience and the appropriate corrective actions have been taken. The DCPP operating experience findings for this program identified no unique plant specific operating experience; therefore DCPP operating experience is consistent with NUREG-1801. Corrective actions have included increasing sampling frequencies, filtering oil systems, changing out oil and corrective maintenance up to and including physical inspections. DCPP has effectively monitored and trended abnormal oil conditions.

Conclusion

The continued implementation of the Lubricating Oil Analysis program, supplemented by the One-Time Inspection program (B2.1.16), will provide reasonable assurance that aging effects will be managed such that the systems and components within the scope of this program will continue to perform their intended functions consistent with the current licensing basis for the period of extended operation.

B2.1.24 Electrical Cables and Connections Not Subject to 10 CFR 50.49 Environmental Qualification Requirements

Program Description

The Electrical Cables and Connections Not Subject to 10 CFR 50.49 Environmental Qualification Requirements program manages the aging effects demonstrated by cable and connection jacket surface anomalies, such as embrittlement, melting, cracking, swelling, surface contamination, or discoloration to ensure that electrical cables, connections and terminal blocks not subject to the environmental qualification (EQ) requirements of 10 CFR 50.49 and within the scope of license renewal are capable of performing their intended function.

The program evaluates cables, connections and terminal blocks in adverse localized environments for aging effects. A plant walk down to identify potential adverse localized environments is performed based on screening limits for the limiting cable, connection or terminal block type. Areas where the conditions exceed the screening limits are evaluated to identify the cable, connections and terminal block types and whether an adverse localized environment exists. At least once every 10 years, accessible cables/cable jackets, connections, and terminal blocks within the scope of license renewal located in an adverse localized environment are inspected. Inaccessible cables, connections and terminal blocks are evaluated based on inspections of accessible cables, connections and terminal blocks in equivalent environments. The accessible cables/cable jackets, connections and terminal blocks within adverse environments are visually inspected for embrittlement, melting, cracking, swelling, surface contamination, or discoloration. The first inspection for license renewal is to be completed prior to the period of extended operation.

Technical information contained within SAND 96-0344, *Aging Management Guideline for Commercial Nuclear Power Plants – Electrical Cable and Terminations* and EPRI TR-1013475, *Plant Support Engineering: License Renewal Electrical Handbook* was used to determine the service limitations of the cable, connection and terminal block insulating materials. SAND 96-0344 and EPRI TR-109619, *Guideline for the Management of Adverse Localized Equipment Environments* provide guidance on techniques for visually inspecting cables, connections and terminal blocks for aging.

This program is a visual inspection for age-related degradation and no actions are taken as part of this program to prevent or mitigate aging degradation. Trending actions are not included as part of this program because the ability to trend inspection results is limited.

The acceptance criterion for visual inspection of accessible non-EQ cable jacket, connection, and terminal block insulating material is the absence of anomalous indications that are signs of degradation. Corrective actions for conditions that are adverse to quality are performed in accordance with the Corrective Action Program as part of the QA program. The corrective action process provides reasonable assurance that deficiencies adverse to quality are either promptly corrected or are evaluated to be acceptable.

NUREG-1801 Consistency

The Electrical Cables and Connections Not Subject to 10 CFR 50.49 Environmental Qualification Requirements program is a new program that, when implemented, will be consistent with NUREG-1801, Section XI.E1, Electrical Cables and Connections Not Subject to 10 CFR 50.49 Environmental Qualification Requirements.

Exceptions to NUREG-1801

None

Enhancements

None

Operating Experience

The Electrical Cables and Connections Not Subject to 10 CFR 50.49 Environmental Qualification Requirements program is a new program; therefore, plant-specific operating experience to verify the effectiveness of the program is not available.

Plant operating experience has identified cable aging due to adverse localized environments. Reactor coolant pump (RCP) motor feeder cables experienced cracking and one failed a polarization index test. Regularly scheduled maintenance identified and monitored RCP power cable aging in the localized environment of the RCP terminal boxes. Heat related cracking of the cable jacket was first identified in 1992 when a scheduled inspection of RCP 1-4 identified the beginning of cable degradation. Subsequent inspections noted the progression of the jacket degradation. Based on the noted progress in the cable deterioration the cables were scheduled for replacement in order to protect against future failures. All of the RCP power cables have been replaced with equivalent cable. Follow up inspections are being conducted on a rotating basis every outage as part of normal plant maintenance, testing, and inspections. No unacceptable degradation of the insulation has been identified for the replaced cables.

As additional industry and applicable plant-specific operating experience become available, the operating experience will be evaluated and appropriately incorporated into the program through the DCPP Corrective Action and Operating Experience Programs. This ongoing review of operating experience will continue throughout the period of extended operation, and the results will be maintained on site. This process will confirm the effectiveness of this new license renewal aging management program by incorporating applicable operating experience and performing self assessments of the program.

The DCPP operating experience findings for this program identified no unique plant specific operating experience; therefore DCPP operating experience is consistent with NUREG-1801.

Conclusion

The implementation of the Electrical Cables and Connections Not Subject to 10 CFR 50.49 Environmental Qualification Requirements program will provide reasonable assurance that aging effects will be managed such that the systems and components within the scope of this program will continue to perform their intended functions consistent with the current licensing basis for the period of extended operation.

B2.1.25 Electrical Cables and Connections Not Subject to 10 CFR 50.49 Environmental Qualification Requirements Used in Instrumentation Circuits

Program Description

The Electrical Cable and Connections Not Subject to 10 CFR 50.49 Environmental Qualification Requirements Used in Instrumentation Circuits program includes the cables and connections used in instrumentation circuits with sensitive, high voltage, low-level signals within the nuclear instrumentation system and radiation monitors.

The purpose of this program is to provide reasonable assurance that the intended function of cables and connections used in instrumentation circuits with sensitive, high voltage, low-level signals that are not subject to the environmental qualification requirements of 10 CFR 50.49 and are exposed to adverse localized environments caused by heat, radiation, or moisture are maintained consistent with the current licensing basis through the period of extended operation. In most areas, the actual ambient environments (e.g., temperature, radiation, or moisture) are less severe than the plant design environment for those areas.

Technical information contained within NUREG/CR-5643, *Insights Gained From Aging Research,* IEEE Std P1205, *IEEE Guide for Assessing, Monitoring and Mitigating Aging Effects on Class 1E Equipment Used in Nuclear Power Generating Stations*, SAND 96-0344, *Aging Management Guideline for Commercial Nuclear Power Plants – Electrical Cable and Terminations* and EPRI TR-109619, *Guideline for the Management of Adverse Localized Equipment Environments* provides guidance on techniques for cable testing and the use of calibration surveillance.

Calibration surveillance tests are used to manage the aging of the cable insulation and connections for radiation monitors so that circuits perform their intended functions. A review of the calibration results will be completed prior to the period of extended operation and every 10 years thereafter.

Cable testing is used to manage the aging of the cable insulation for the nuclear instrumentation system. Cable tests such as insulation resistance testing or other tests are performed for detecting deterioration of the cable insulation system. The cable will be tested prior to the period of extended operation and every 10 years thereafter. Acceptance criteria will be determined prior to testing based on the type of cable and type of test performed.

If an instrument or monitor fails to meet acceptance criteria during routine testing or calibration, an engineering evaluation will be performed, including consideration of

aging effects. The evaluation will determine what, if any, additional troubleshooting will be performed on the loop to identify and resolve the cause of the failure. The troubleshooting includes the instrumentation cable and connections, as appropriate.

This program does not prevent degradation due to aging effects but provides measures for the monitoring of the circuits and cables to detect the degradation prior to a loss of intended function. Trending actions are not included as part of this program because the ability to trend calibration and test results is dependent on the specific type of test chosen.

NUREG-1801 Consistency

The Electrical Cables and Connections Not Subject to 10 CFR 50.49 Environmental Qualification Requirements Used in Instrumentation Circuits program is an existing program, that following enhancement, will be consistent with NUREG-1801, Section XI.E2 Electrical Cables and Connections Not Subject to 10 CFR 50.49 Environmental Qualification Requirements Used in Instrumentation Circuits.

Exceptions to NUREG-1801

None

Enhancements

Prior to the period of extended operation, the following enhancement will be implemented in the following program elements:

Scope of Program - Element 1, Parameters Monitored/Inspected - Element 3, Detection of Aging Effects - Element 4, Acceptance Criteria - Element 6, and Corrective Actions - Element 7

Procedures will be enhanced to identify license renewal scope and require an engineering evaluation of the calibration results when the loop fails to meet acceptance criteria.

Operating Experience

Industry operating experience has identified occurrences of cable and connection insulation degradation in high voltage, low level instrumentation circuits performing radiation monitoring and nuclear instrumentation functions. The majority of occurrences are related to cable and connection insulation degradation inside of containment near the reactor vessel or to a change in an instrument readout associated with a proximate change in temperature inside the containment.

A review of DCPP plant operating experience was performed and identified issues with embrittlement and cracking of cable outer jacket. No loss of function was identified. In response to industry operating experience in January 2004, DCPP initiated a series of nuclear instrumentation cable inspections. Some cable jacket degradation was identified. Corrective actions were taken to repair, move, and modify, as applicable, nuclear instrumentation cable installations that showed signs of degradation or were at risk of accelerated degradation.

The DCPP operating experience findings for this program identified no unique plant-specific operating experience; therefore DCPP operating experience is consistent with NUREG-1801.

Conclusion

The continued implementation of the Electrical Cables and Connections Not Subject to 10 CFR 50.49 Environmental Qualification Requirements Used in Instrumentation Circuits program provides reasonable assurance that aging effects will be managed such that the systems and components within the scope of this program will continue to perform their intended functions consistent with the current licensing basis for the period of extended operation.

B2.1.26 Inaccessible Medium Voltage Cables Not Subject to 10 CFR 50.49 Environmental Qualification Requirements

Program Description

The Inaccessible Medium Voltage Cables Not Subject to 10 CFR 50.49 Environmental Qualification Requirements program manages the aging effects of inaccessible medium-voltage cables located in conduit, duct banks, and pull boxes exposed to adverse localized environments caused by significant moisture simultaneously with significant voltage to ensure that inaccessible medium voltage cables not subject to the environmental qualification (EQ) requirements of 10 CFR 50.49 and within the scope of license renewal are capable of performing their intended function. This program considers the technical information and guidance provided in NUREG/CR-5643, *Insights Gained From Aging Research*, IEEE Std. P1205, *IEEE Guide for Assessing, Monitoring and Mitigating Aging Effects on Class 1E Equipment Used in Nuclear Power Generating Stations*, SAND 96-0344, *Aging Management Guideline for Commercial Nuclear Power Plants – Electrical Cable and Terminations*, and EPRI TR-109619, *Guideline for the Management of Adverse Localized Equipment Environments*.

Cable pull boxes with a potential for water intrusion that contain in-scope non-EQ inaccessible medium voltage cables are inspected for water collection. The inspection frequency is at least once every two years. Inspection for water collection within the cable pull boxes is performed based on plant experience with water accumulation. If any of the pull boxes are found to contain water, the collected water is removed as required, and the inspection frequency adjusted based on past experience.

In-scope non-EQ inaccessible medium voltage cables routed through pull boxes will be tested to provide an indication of the conductor insulation condition. A polarization index test as described in EPRI TR-103834-P1-2, *Effects of Moisture on the Life of Power Plant Cables* or other testing that is state-of-the-art at the time of the testing will be performed at least once every 10 years. The first test will be completed prior to the period of extended operation. The acceptance criteria for each test will be defined for the specific type of test performed and the specific cable tested.

Corrective actions for conditions that are adverse to quality are performed in accordance with the Corrective Action Program as part of the QA program. The corrective action process provides reasonable assurance that deficiencies adverse to quality are either promptly corrected or are evaluated to be acceptable.

Trending actions are not included as part of this program because the ability to trend results is dependent on the specific type of method chosen.

NUREG-1801 Consistency

The Inaccessible Medium Voltage Cables Not Subject to 10 CFR 50.49 Environmental Qualification Requirements program is an existing program, that following enhancement, will be consistent with NUREG-1801, Section XI.E3, Inaccessible Medium Voltage Cables Not Subject to 10 CFR 50.49 Environmental Qualification Requirements.

Exceptions to NUREG-1801

None

Enhancements

Prior to the period of extended operation, the following enhancement will be implemented in the following program elements:

Scope of Program - Element 1, Preventive Actions - Element 2, Parameters Monitored/Inspected - Element 3, Detection of Aging Effects - Element 4, Acceptance Criteria - Element 6, and Corrective Actions - Element 7

Procedures will implement the aging management program for testing of the medium voltage cables not subject to 10 CFR 50.49 EQ requirements and enhance the periodic inspections and removal of water from the cable pull boxes containing in scope medium voltage cables not subject to 10 CFR 50.49 EQ requirements.

Operating Experience

A review of the plant operating experience indicates that DCPP has experienced seven in-service power cable single phase grounds that required removing components from service to replace conductors. In response to industry and plant operating experience cable testing identified four additional cables did not pass the insulation acceptance criteria. All 11 cables have been replaced. DCPP has replaced all medium voltage cable within the scope of license renewal.

DCPP has experienced water accumulation in pull boxes and underground conduits. Actions taken to address this water accumulation include inspection of pull boxes for water accumulation, removal of the water as required, maintenance of sump pumps and removal of conduit seals. The DCPP operating experience findings for this

program identify no unique plant specific operating experience; therefore DCPP operating experience is consistent with NUREG-1801.

Conclusion

The continued implementation of the Inaccessible Medium Voltage Cables Not Subject to 10 CFR 50.49 Environmental Qualification Requirements program will provide reasonable assurance that aging effects will be managed such that the systems and components within the scope of this program will continue to perform their intended functions consistent with the current licensing basis for the period of extended operation.

B2.1.27 ASME Section XI, Subsection IWE

Program Description

For the second containment inspection interval commencing in May 2008, DCPP performs IWE Containment Inservice Inspections (CISIs) in accordance with the 2001 Edition of ASME Section XI, Subsection IWE (with the 2002 and 2003 addenda), supplemented with the applicable requirements of 10 CFR 50.55a(b)(2)(ix). This program is consistent with provisions in 10 CFR 50.55a that specifies use of the ASME Code edition in effect 12 months prior to the start of the inspection interval. The DCPP CISI program is an existing program that is in accordance with 10 CFR 50.55a. DCPP will use the ASME Code edition consistent with the provisions of 10 CFR 50.55a during the period of extended operation.

The DCPP ASME Section XI, Subsection IWE program manages loss of material and loss of sealing: leakage through containment and provides aging management of the steel liner of the concrete containment building. IWE inspections are performed in order to identify and manage containment liner aging effects that could result in loss of intended function. Included in this inspection program are the containment liner plate and its integral attachments, containment hatches and airlocks, and pressure-retaining bolting. Pressure retaining containment seals and gaskets are not addressed by the 2001 edition of ASME Section XI, Subsection IWE (with the 2002 and 2003 addenda). These components are evaluated per 10 CFR 50, Appendix J, as discussed in Section B2.1.30. Acceptance criteria for components subject to IWE examination requirements are specified in Article IWE-3000.

Surface and volumetric examinations are performed to identify indications of degradation. The primary inspection method is a general visual examination (VT-3, VT-1). Ultrasonic thickness measurements are performed, as required. All areas requiring augmented examination per criteria IWE-1240 and IWE-2420 receive a detailed visual inspection.

When the program results require evaluation of flaws or evaluation of areas of degradation or repairs, and the component is found to be acceptable for continued service, the areas containing such flaws, degradation, or repairs shall be reexamined during the next inspection period, in accordance with Examination Category E-C. When these reexaminations reveal that the flaws, areas of degradation, or repairs remain essentially unchanged for the next inspection period, these areas will no longer require augmented examination in accordance with

Examination Category E-C. These examinations and reexaminations will be in accordance with IWE-2420(b) and (c).

In the DCPP ASME Section XI, Subsection IWE program, acceptance standards in accordance with IWE-3500 will be applied to evaluate the acceptability of the component for service following each inservice examination.

Containment liner components, whose examination detects flaws or areas of degradation that do not meet the acceptance standards of IWE-3000, will be acceptable for continued service without a repair/replacement activity if an engineering evaluation determines: (1) That the flaw or area of degradation is non structural in nature, or (2) That the flaw or area of degradation has no unacceptable effect on the structural integrity of the containment.

NUREG-1801 Consistency

The ASME Section XI, Subsection IWE program is an existing program that is consistent with exception to NUREG-1801, Section XI.S1, ASME Section XI, Subsection IWE.

Exceptions to NUREG-1801

Program Elements Affected

Scope of Program – Element 1

NUREG-1800, Section XI.S1, states that "The components within the scope of Subsection IWE are …containment seals and gaskets..." DCPP will implement the 2001 edition of ASME Section XI, Subsection IWE. Pressure retaining containment seals and gaskets are not addressed by the 2001 edition of ASME Section XI, Subsection IWE (with the 2002 and 2003 addenda). These components are evaluated per 10 CFR Part 50, Appendix J, as discussed in Section B2.1.30.

ASME Table IWE-2500-1, Examination Category E-A, Note (1)(d), states that pressure-retaining bolted connections need not be disassembled for performance of examinations and bolting may remain in place under tension. There is no requirement in the 2001 edition of ASME Section XI, Subsection IWE (with the 2002 and 2003 addenda) for torque or tension testing of bolting.

Parameters Monitored/Inspected – Element 3

NUREG-1801, Section XI.S1, states that, "Table IWE-2500-1 specifies seven categories for examination." The DCPP ASME Section XI, Subsection IWE program is in accordance with the 2001 Edition of the ASME Section XI, Subsection IWE

(with the 2002 and 2003 addenda). This edition of the code does not specify seven categories of examination in Table IWE 2500-1.

Monitoring and Trending – Element 5

NUREG-1801, Section XI.S1, states that, "When … reexaminations reveal that the flaws, areas of degradation, or repairs remain essentially unchanged for three consecutive inspection periods, these areas no longer require augmented examination in accordance with Examination Category E-C." The DCPP ASME Section XI, Subsection IWE program is in accordance with the 2001 Edition of the ASME Section XI, Subsection IWE (with the 2002 and 2003 addenda). According to ASME Section XI, Paragraphs IWE-2420(b) and (c), flaws or areas of degradation that have been accepted by engineering evaluation shall be reexamined during the next inspection period, and if they are found to remain essentially unchanged for this inspection period, these areas no longer require augmented examination. This is not consistent with Element 5, which requires that they remain essentially unchanged for three consecutive inspection periods.

NUREG-1801, Section XI.S1 invokes IWE-2430 for reexamination of flaws or areas of degradation exceeding acceptance criteria. ." The DCPP ASME Section XI, Subsection IWE program is in accordance with the 2001 Edition of the ASME Section XI, Subsection IWE (with the 2002 and 2003 addenda. IWE 2430 was deleted prior to the issuance of the 2001 Edition of ASME Section XI, (with the 2002 and 2003 addenda). The changes to Table IWE 2500-1 eliminate several examination categories. The categories that remain all require 100 percent examination. Therefore no items are available for additional examinations.

Acceptance Criteria – Element 6, Corrective Actions – Element 7, and Confirmation Process – Element 8

NUREG-1801, Section XI.S1 references Table IWE-3410-1 for "criteria to evaluate acceptability of the containment components for service following the preservice examination and each inservice examination." The DCPP ASME Section XI, Subsection IWE program is in accordance with the 2001 Edition of the ASME Section XI, Subsection IWE (with the 2002 and 2003 addenda Table IWE-3410-1 was deleted prior to the issuance of the 2001 Edition of ASME Section XI, (with the 2002 and 2003 addenda). The acceptance standards previously specified in Table IWE-3410-1 are now given in Section IWE-3500.

Enhancements

None

Operating Experience

DCPP procedures have confirmed that the components of containment liners are capable of performing their intended functions.

The containment liners for both Units are inspected per the ASME Section XI, Subsections IWE programs. Exams are conducted every refueling outage, when necessary, to meet the frequency requirements of once per period of 3 1/3 years. The most recent examinations of containment liners were conducted during the 2R14 outage (2008) and the 1R15 outage (2009). The examination results for the Unit 1 and 2 containment liners were found to be acceptable and no indications of degradation were found that would result in loss of the containment liner intended function.

Based on a review of DCPP operating experience, no significant degradation or corrosion of the components of containment liners has been identified. Minor areas of degradation of protective coatings (paint) were identified. Repairs of these areas have been completed. The DCPP operating experience findings for this program identified no unique plant specific operating experience; therefore DCPP operating experience is consistent with NUREG-1801. Therefore, the ASME XI, Subsection IWE Program has been effective in ensuring that the DCPP components of containment liners will continue to operate within the current DCPP licensing basis.

Conclusion

The continued implementation of the ASME Section XI, Subsection IWE program provides reasonable assurance that aging effects will be managed such that the systems and components within the scope of this program will continue to perform their intended functions consistent with the current licensing basis for the period of extended operation.

B2.1.28 ASME Section XI, Subsection IWL

Program Description

The ASME Section XI, Subsection IWL program manages cracking due to expansion, loss of bond, and loss of material (spalling, scaling), increase in porosity and permeability, increase in porosity, permeability and cracking and provides aging management of the concrete containment building, which is conventionally reinforced. The design does not include post-tensioned tendons. For the current inspection interval, DCPP will perform IWL Containment Inservice Inspections (CISIs) in accordance with the 2001 Edition of ASME Section XI, Subsection IWL (with the 2002 and 2003 addenda), supplemented with the applicable requirements of 10 CFR 50.55a(b)(2). This program will be consistent with provisions in 10 CFR 50.55a that specify use of the ASME Code edition in effect 12 months prior to the start of the inspection interval. The DCPP CISI program is in accordance with 10 CFR 50.55a. DCPP will use the ASME Code edition consistent with the provisions of 10 CFR 50.55a during the period of extended operation.

The ASME Section XI, Subsection IWL inspections are performed in order to identify and manage containment concrete aging effects that could result in loss of intended function. Included in this inspection program are the accessible surfaces of the containment exterior concrete. A summary of the containment concrete components at DCPP, the examinations required, and a detailed schedule of examinations for items subject to IWL inspections are provided in plant procedures. The primary inspection method will be a general visual examination (VT-3C, VT-1, VT-1C). Acceptance criteria, corrective actions, and expansion of the inspection scope when degradation exceeding the acceptance criteria is in accordance with ASME Section XI, Subsection IWL.

The DCPP ASME Section XI, Subsection IWL program does not prevent degradation due to aging effects but provides measures for monitoring to detect the degradation prior to loss of intended function.

In the DCPP ASME Section XI, Subsection IWL program, general visual examinations are performed for the entire accessible surface of the containment concrete in accordance with ACI 201.1R to determine the general structural condition by identifying areas of concrete deterioration or distress. The DCPP IWL CISI program is consistent with IWL-2510.

The DCPP ASME Section XI, Subsection IWL program is in accordance with IWL-2400. Each unit will be examined on an alternating 10-year cycle as specified in IWL-2421. Visual examinations of 100 percent of the accessible surfaces on the

concrete shells will be completed on 10-year cycles for each unit (one unit every five years).

Inspection frequencies, acceptance criteria, corrective actions, and expansion of the inspection scope when degradation exceeding the acceptance criteria is found are in accordance with ASME Section XI, Subsection IWL, supplemented with the applicable requirements of 10 CFR 50.55a(b)(2).

NUREG-1801 Consistency

The ASME Section XI, Subsection IWL program is an existing program that is consistent with NUREG-1801, Section XI.S2, ASME Section XI, Subsection IWL.

Exceptions to NUREG-1801

None

Enhancements

None

Operating Experience

DCPP operating experience is evaluated and corrective actions are implemented to ensure that the components of the ASME XI, Subsection IWL program are maintained. This is accomplished by promptly identifying and documenting any condition that indicates degradation of the components of the ASME XI, Subsection IWL program using the corrective action program. Industry operating experience evaluations and Maintenance Rule Periodic Self Assessments provide additional input to ensure that functions of the program components are maintained.

Based on a review of DCPP specific operating experience, no significant degradation or corrosion of the concrete containment has been identified. The DCPP operating experience findings for this program identified no unique plant specific operating experience; therefore DCPP operating experience is consistent with NUREG-1801. For example, the most recent Unit 1 and 2 IWL inspections were completed in April 2001 and August 2006, respectively. The inspection reports concluded that the condition of the Unit 1 and Unit 2 containment concrete appears structurally sound and there is no apparent loss of structural capacity. No repairs were required. No unacceptable conditions existed. All structures and structural components are acceptable to maintain their functions in all events.

Therefore, the DCPP ASME Section XI, Subsection IWL, program has been effective in ensuring that the DCPP concrete containment will continue to operate within its licensing basis.

Conclusion

The continued implementation of the ASME Section XI, Subsection IWL program provides reasonable assurance that aging effects will be managed such that the systems and components within the scope of this program will continue to perform their intended functions consistent with the current licensing basis for the period of extended operation.

B2.1.29 ASME Section XI, Subsection IWF

Program Description

The ASME Section XI, Subsection IWF program manages loss of material, cracking, and loss of mechanical function that could result in loss of intended function for supports for Class 1, 2, and 3 piping and components. There are no Class MC supports at DCPP. The program conforms to Inspection Program B of ASME Section XI. Units 1 and 2 are in the third inservice inspection (ISI) interval (May 7, 2006 to May 7, 2015 for Unit 1 and November 10, 2006 to March 13, 2016 for Unit 2 respectively). During this interval, DCPP performs inspections of supports for Class 1, 2, and 3 piping and components in accordance with ASME Section XI, Subsection IWF 2001 edition with 2002 and 2003 addenda. In conformance with 10 CFR 50.55a(g)(4)(ii), the DCPP ISI program is updated during each successive 120-month inspection interval to comply with the requirements of the latest edition of the Code specified twelve months before the start of the inspection interval. DCPP will use the ASME Code Edition consistent with the provisions of 10 CFR 50.55a during the period of extended operation.

Supports for Class 1, 2, and 3 piping and components are selected for examination per the requirements of ASME Section XI, Subsection IWF. Acceptance standards are specified in Article IWF-3400. Scope of the inspection for supports is based on class and total population as defined in Table IWF-2500-1. When a component support requires corrective measures in accordance with the provisions of IWF-3122.2, that support shall be reexamined during the next inspection period. When the reexaminations do not require additional corrective measures during the next inspection period, the inspection schedule will revert to the requirements of the original inspection program. Component support examinations that detect flaws or relevant conditions exceeding the acceptance criteria of IWF-3400 shall be extended to include additional examinations in accordance with IWF-2430.

The ASME Section XI, Subsection IWF program provides a systematic method for periodic examination of supports for Class 1, 2, and 3 piping and components. The primary inspection method is visual examination. The complete inspection scope is repeated every 10-year inspection interval. VT-3 examinations are conducted to determine the general mechanical and structural condition of components and their supports by verifying parameters such as clearances, settings, and physical displacements; and to detect discontinuities and imperfections, such as loss of integrity at bolted or welded connections, loose or missing parts, debris, corrosion, wear, or erosion. VT-3 inspectors are qualified in accordance with ASME

Section XI, 2001 Edition with 2002 and 2003 Addenda. The instructions and acceptance criteria for the visual examinations are included in DCPP procedures.

NUREG-1801 Consistency

The ASME Section XI, Subsection IWF program is an existing program that is consistent with NUREG-1801, Section XI.S3, ASME Section XI Subsection IWF.

Exceptions to NUREG-1801

None

Enhancements

None

Operating Experience

Performance of inservice inspections in accordance with plant procedures has confirmed that the supports for Class 1, 2, and 3 piping and components are capable of performing their intended functions. A review of plant-specific operating experience has not identified any program adequacy or implementation issues with the DCPP ASME Section XI, Subsection IWF program. Industry operating experience is evaluated for relevancy to DCPP, and appropriate actions are taken and documented. The DCPP operating experience findings for this program identified no unique plant specific operating experience; therefore DCPP operating experience is consistent with NUREG-1801. Based on these results, the DCPP ASME Section XI, Subsection IWF program is effective in monitoring ASME Class 1, 2, and 3 component supports and detecting aging effects prior to loss of intended function.

A review of the 1R13, 1R14, 1R15, 2R13, and 2R14 outage summary reports concluded that required IWF inspections were performed on Class 1, Class 2, and Class 3 supports just prior to or during those outages at DCPP. All inspections results were found to be acceptable. No repair work was needed, and no reexaminations required.

The ASME Section XI, Subsection IWF program at DCPP is updated to account for industry operating experience. ASME Section XI is also revised every three years and addenda are issued in the interim, which allows the code to be updated to reflect industry operating experience. The requirement to update the ASME Section XI, Subsection IWF program to reference more recent editions of ASME Section XI at the end of each inspection interval ensures the ASME Section XI, Subsection IWF

program reflects enhancements due to operating experience that have been incorporated into ASME Section XI.

Therefore, the ASME Section XI, Subsection IWF program has been effective in ensuring that the supports for Class 1, 2, and 3 piping and components will continue to operate within the current licensing basis, and the structure and component intended functions will be maintained during the period of extended operation.

Conclusion

The continued implementation of the ASME Section XI, Subsection IWF program provides reasonable assurance that aging effects will be managed such that the systems and components within the scope of this program will continue to perform their intended functions consistent with the current licensing basis for the period of extended operation.

B2.1.30 10 CFR Part 50, Appendix J

Program Description

The 10 CFR Part 50, Appendix J program manages loss of sealing, leakage through containment, loss of leak tightness, and loss of material. The program detects pressure boundary degradation in the reactor containment and all systems and components penetrating primary containment that are covered under the Appendix J program. The program includes the steel liner of the concrete containment and its integral attachments, as well as welds, gaskets, seals, and bolted connections for the primary containment pressure boundary access points. The 10 CFR Part 50, Appendix J program consists of tests performed in accordance with the regulations and guidance provided in 10 CFR Part 50, Appendix J, *Primary Reactor Containment Leakage Testing for Water-Cooled Power Reactors* (Option B); Regulatory Guide 1.163, *Performance-Based Containment Leak-Testing Program*; NEI 94- 01, *Industry Guideline for Implementing Performance-Based Option of 10 CFR Part 50, Appendix J*; and ANSI/ANS 56.8 - 1994, *Containment System Leakage Testing Requirements*.

Containment leak rate tests are performed in accordance with 10 CFR Part 50, Appendix J, Option B to assure that leakage through the reactor containment and systems and components penetrating primary containment does not exceed allowable leakage limits specified in the DCPP Technical Specifications. Periodic surveillance of reactor containment penetrations and isolation valves is performed so that proper maintenance and repairs are made during the service life of the containment and the systems and components penetrating primary containment. An integrated leak rate test (ILRT) is performed during a period of reactor shutdown at the frequency specified in 10 CFR Part 50, Appendix J, Option B. Local leak rate tests (LLRT) are performed on isolation valves and containment access penetrations at frequencies that comply with the requirements of 10 CFR 50 Appendix J, Option B.

The 10 CFR Part 50 Appendix J program does not prevent degradation due to aging effects but provides measures for monitoring to detect the degradation prior to the loss of intended function.

The 10 CFR Part 50 Appendix J program determines when corrective actions are required and adjustments are made to the frequency of the leakage tests based upon leakrate performance of both overall containment and individual penetrations. This is consistent with the guidance provided in NEI 94-01, Revision 0.

NUREG-1801 Consistency

The 10 CFR Part 50, Appendix J program is an existing program that is consistent with NUREG-1801, Section XI.S4, 10 CFR Part 50, Appendix J.

Exceptions to NUREG-1801

None

Enhancements

None

Operating Experience

The 10 CFR Part 50, Appendix J program performs containment leak rate tests in accordance with DCPP Technical Specification 5.5.16, *Containment Leakage Rate Testing Program*. A review of 10 years of operating experience has confirmed that the overall leakage total remains within established DCPP Technical Specification limits, well below the acceptance criteria. Individual valves on occasion exceed the leakage acceptance test values and repairs are made in accordance with the program.

The most recent Appendix J test results for both Units are shown below. These results are consistent with results from the past several outages with no negative trends identified.

Most recent test results for Unit 1:

Date of last Type A test: March 17, 2009

As-Found Leakage: 0.03795 percent weight per day (%wt/day) (at 95 percent upper confidence limit)

As-Left Leakage: 0.03573 %wt/day (at 95 percent upper confidence limit)

The allowable As-Found limit for Type A test leakage is 0.1 %wt/day

Last type B and C test: 15th refueling outage

Total Leakage Rate: 76.499 lb_m/Day

The allowable limit for the As-Left maximum path Type B and C combined leakage is 455.4 lb_m/day

Most recent test results for Unit 2:

Date of Last Type A Test: April 4, 2008

As-Found Leakage: 0.0193 %wt/day (at 95 percent upper confidence limit)

As-Left Leakage: 0.0171 %wt/day (at 95 percent upper confidence limit)

The allowable As-Found limit for Type A test leakage is 0.1 %wt/day

Date of last type B and C test: 14th refueling outage

Total Leakage Rate: 71.33 lb_m/day

The allowable limit for the As-Left maximum path Type B and C combined leakage is 455.4 lb_m/day

The allowable As-Found limit for Type A test leakage is 0.1 %wt/day and the latest results are well below 50 percent of this allowable limit. Type A As-Found leakage test data in %wt/day is as follows: 0.068 %wt/day in 1991 and 0.060 %wt/day in 1994 for Unit 1 and 0.053 %wt/day in 1990, 0.048 %wt/day in 1993 and 0.0193 %wt/day in 2008 for Unit 2.

The allowable limit for the As-Left maximum path Type B and C combined leakage is 455.4 lb_m/day and the latest results represent approximately 16 percent of this value. Type B and C leakage test data in pounds-mass per day (lb_m/day) is as follows: 56.940 lb_m/day in 2004, 66.942 lb_m/day in 2007, and 76.449 lb_m/day in 2009 for Unit 1 and 65.660 lb_m/day in 2004, 69.770 lb_m/day in 2006, and 71.332 lb_m/day in 2008 for Unit 2.

Type B and C tests are conducted at 24, 30, 60, or 120 month intervals for the penetrations tested. The results of the individual Type B and Type C tests are combined and the total combined leakage is updated after each refueling outage. The Type B and C combined As-Left leakage rate, MXPLR (max path leak rate), acceptance criterion is 0.6 La.

Conclusion

The continued implementation of the 10 CFR Part 50, Appendix J program provides reasonable assurance that aging effects will be managed such that the systems and components within the scope of this program will continue to perform their intended functions consistent with the current licensing basis for the period of extended operation.

B2.1.31 Masonry Wall Program

Program Description

The Masonry Wall Program is implemented as part of the Structures Monitoring Program (SMP), which implements the requirements of 10 CFR 50.65, the Maintenance Rule. The Masonry Wall Program manages cracking of masonry walls that are within scope of license renewal based on guidance provided in NRC Bulletin 80-11, *Masonry Wall Design* and NRC Information Notice 87-67, *Lessons Learned from Regional Inspections of Licensee Actions in Response to NRC IE Bulletin 80-11*. The SMP manages cracking and loss of material for the structural steel restraint systems of the masonry walls.

The Masonry Wall Program contains inspection guidelines and lists attributes that cause aging of masonry walls, which are to be monitored during structural monitoring inspections, as well as establishes examination criteria, evaluation requirements, and acceptance criteria. The provisions of the program are consistent with guidance provided in Information Notice 87-67 for inspections and evaluation of masonry wall cracking not addressed in the evaluation basis in response to Bulletin 80-11.

All masonry walls that support safety-related piping or equipment, or whose failure could prevent a safety-related system from performing its safety function, are within the scope of the Masonry Wall Program. These walls are located in the auxiliary building and the turbine building. In response to NRC Bulletin 80-11, DCPP submitted a letter to the NRC dated July 22, 1981, which provided detailed plant-specific design and evaluation criteria for masonry walls. DCPP's commitments regarding reevaluation of masonry walls are documented in PG&E Letter No. DCL-91-026, dated February 12, 1991.

Some masonry walls are within the scope of license renewal based solely on FSAR commitments to satisfy fire protection requirements. The guidance of NRC Bulletin 80-11, which requires seismic bracing of concrete masonry walls, does not apply to these walls. Refer to the Fire Protection program (B2.1.12) for aging management of the masonry wall fire barriers.

The Masonry Wall Program, which is part of the Structures Monitoring Program, manages aging by providing measures for monitoring that detect the effects of aging prior to loss of intended function.

Masonry walls are monitored for significant cracking, missing or broken blocks, deterioration of penetrations, discoloration or efflorescence. Other attributes

monitored include aging effects on structural steel restraint systems of the masonry walls for loose, missing, or damaged fasteners, cracked welds, excessive deflections, or corrosion. Anchorages are also monitored for corrosion of baseplate or anchors, or cracked, separated, or missing concrete or grout pads.

Masonry walls are visually inspected by degreed civil or mechanical engineers or an individual having equivalent knowledge and training. Inspectors are required to have at least three years of related experience.

The inspection frequency for all structural SSCs, including masonry walls, is determined by the civil coordinator as described in the existing program. Inspections are scheduled to result in total observation of all accessible areas in both units over a maximum 10-year interval (measured from the date of the baseline or prior routine observation). Inspections for areas that are inaccessible during normal plant operation are scheduled by the civil coordinator for the next available time when the area becomes accessible (e.g., outages, curtailments, maintenance activities). This frequency of inspections ensures that there is no loss of intended function between inspections.

Based on an evaluation of the rate of observed degradation, the severity of the environmental condition, or for SSCs assigned to the goal setting category the design structural engineer or civil coordinator may schedule inspections at a closer interval. In addition, special inspections may be requested by the civil coordinator subsequent to an unusual transient or event (in conjunction with any inspections required by other plant procedures).

Examinations are used to ensure that structures will be capable of performing their intended function through the period of extended operation. In the event that an aging effect is observed that could deteriorate further and impair the structure from meeting intended functions, or could cause the structure to not meet its design basis, photographs or videotapes, with appropriate scaling aids, are taken to document the present condition of any defect or degradation. All potential problems found during the inspections are reviewed by the design structural engineer, civil coordinator, or their designee, to determine whether the condition requires the initiation of a corrective action document. Conditions requiring the initiation of a corrective action document under this program include items requiring immediate repair/replacement, items requiring a detailed engineering evaluation to determine the impact or significance of the condition, and items requiring a more detailed inspection or monitoring at an increased frequency.

Paragraph (a)(2) of the Maintenance Rule requires that all SSCs within the scope of the Maintenance Rule have performance monitoring and an effective preventive

maintenance program. When the performance of an SSC covered by paragraph (a)(2) is found to be unacceptable, paragraph (a)(1) of the Maintenance Rule requires that an evaluation be performed to determine the need for actions to improve the SSCs performance, goal setting, and other responses.

NUREG-1801 Consistency

The Masonry Wall Program is an existing program that is consistent with NUREG-1801, Section XI.S5, Masonry Wall Program.

Exceptions to NUREG-1801

None

Enhancements

None

Operating Experience

The procedures of the Structural Monitoring Program are used to effectively detect and monitor the aging effects of the safety-related concrete masonry walls at DCPP. Monitoring of masonry walls is carried out by the Maintenance Rule Monitoring Program. All masonry walls are included in the scope of the Maintenance Rule.

Baseline inspections of DCPP's masonry walls were completed in 1997. The overall assessment found the walls to be in good condition and maintaining their intended design functions. There were minor degradation problems that have been fixed or have been evaluated to be acceptable as they are identified. No significant degradation was observed. Corrective action documents were initiated for walls showing deficiencies to ensure further degradation does not continue to impact wall function.

In 2009, the first cycle of periodic follow-up inspections was performed. The findings revealed no significant degradation to the masonry walls, as they are still able to perform their intended design function in accordance with 10 CFR 54.4. No unacceptable conditions existed. Any issues previously addressed during the baseline inspections of the masonry walls were re-inspected and performance was tracked. Any deficiencies detected during the Maintenance Rule inspections were documented in the Corrective Action Program. There are no clear trends that would indicate a necessity for increased surveillance (other than what is being done as part of the Maintenance Rule). The monitoring being performed under the Maintenance Rule Program is adequate to track any changes in masonry wall performance.

The Structural Monitoring Program has been effective in maintaining its purpose through the process of monitoring, detecting and mitigating the effects of degradation on the structural integrity of DCPP's wall and structural systems.

Therefore, the Structural Monitoring Program has been effective in ensuring that the DCPP masonry walls will continue to function within their licensing basis. The DCPP operating experience findings for this program identified no unique plant specific operating experience; therefore DCPP operating experience is consistent with NUREG-1801.

Conclusion

The continued implementation of the Masonry Wall Program provides reasonable assurance that aging effects will be managed such that the systems and components within the scope of this program will continue to perform their intended functions consistent with the current licensing basis for the period of extended operation.

B2.1.32 Structures Monitoring Program

Program Description

The Structures Monitoring Program (SMP) manages cracking, loss of material, and change in material properties by monitoring the condition of structures and structural supports that are in the scope of license renewal. The SMP implements the requirements of 10 CFR 50.65, the Maintenance Rule, which is consistent with the guidance of NUMARC 93-01, *Industry Guidelines for Monitoring the Effectiveness of Maintenance at Nuclear Power Plants,* Revision 2 and Regulatory Guide 1.160, *Monitoring the Effectiveness of Maintenance at Nuclear Power Plants,* Revision 2. Inspection methods, inspection frequency and inspector qualifications are in accordance with DCPP procedures which reference ACI 349.3R-96 and ASCE 11-90. The SMP provides inspection guidelines and walkdown checklists for concrete elements, structural steel, masonry walls, structural features (e.g. caulking, sealants, roofs, etc.), structural supports, and miscellaneous components such as doors. The SMP includes all masonry walls and water-control structures within the scope of license renewal. The SMP also inspects supports for equipment, piping, conduit, cable tray, HVAC, and instrument components. The scope of the SMP does not include the inspection of the supports specifically inspected per the requirements of the ASME Section XI ISI Program. Though coatings may have been applied to the external surfaces of structural members, no credit was taken for these coatings in the determination of aging effects for the underlying materials. The SMP evaluates the condition of the coatings as an indication of the condition of the underlying materials.

The following structures are within the scope of License Renewal and are in the scope of the SMP inspections:

Auxiliary Building (includes the control room)
Containment Structure
Turbine Building
Radwaste Storage Facilities
Pipeway Structure
Fuel Handling Building Steel Superstructure
Commodity Supports and Anchorages
Outdoor Tanks and Foundations
Buried Structural Commodities
Electrical Structures and Foundations

The following water control structures are also within scope of license renewal and in scope for SMP:

Intake Structure
Discharge Structure
Circulating Water Conduits
Earth Slopes over the ASW pipes
East and West Breakwaters
Raw Water Reservoirs

The DCPP SMP manages aging by providing measures for monitoring that detect the effects of aging prior to loss of intended function.

The aging effects monitored by the DCPP SMP, are consistent with ACI 349.3R-96 and ASCE 11-90.

The inspection methods, inspection schedule, and inspector qualifications are specified in the DCPP SMP, which is consistent with ACI 349.3R-96 and ASCE 11-90. Visual inspections are used to determine the condition of SSCs within the scope of the SMP, unless more rigorous inspections are deemed necessary by the design system engineer or civil coordinator.

Inspections are scheduled such that the accessible areas of both units are inspected over a maximum 10-year interval (measured from the date of the baseline or prior routine observation), except water control structures, for which all accessible areas of both units are inspected at a frequency of no more than five years. Inaccessible Area Inspections, for areas that are inaccessible during normal plant operation, will be scheduled for the next available time when the area becomes accessible (e.g., outages, curtailments, maintenance activities). In accordance with a plant procedure, the ASW pump bay and traveling screens are currently inspected by divers on a refueling cycle interval. This procedure will be enhanced to also specifically include inspection of the bar racks, and associated structural components.

The DCPP SMP is consistent with 10 CFR 50.65. Any Civil SSC classified as "acceptable with deficiencies" or "unacceptable" requires consideration for transfer to (a)(1) status. All other civil SSCs are assigned to (a)(2) status. The SMP provides guidance for the determination of performance criteria for SSCs included within the scope of the Maintenance Rule. These guidelines were used to establish the inspection attributes for SSCs monitored by the DCPP SMP. The DCPP SMP uses "Acceptable", "Acceptable with Deficiencies", and "Unacceptable" to classify levels of aging effect for each inspection attribute. The classifications and

acceptance criteria are based on DCPP design bases documents, current licensing bases, and industry standards, such as ACI 349.3R-96 and ASCE 11-90.

NUREG-1801 Consistency

The Structures Monitoring Program is an existing program that, following enhancement, will be consistent with NUREG-1801, Section XI.S6, Structures Monitoring Program.

Exceptions to NUREG-1801

None

Enhancements

Prior to the period of extended operation, the following enhancements will be implemented in the following program elements:

Parameters Monitored or Inspected – Element 3

Plant procedures will be enhanced to monitor groundwater samples every five years for pH, sulfates and chloride concentrations, including consideration for potential seasonal variations.

Plant procedures will be enhanced to specify inspections of bar racks and associated structural components in the intake structure.

Operating Experience

DCPP's SMP is performed in accordance with 10 CFR 50.65(a), Maintenance Rule (10-year intervals). The inspections assess the overall condition of DCPP structures, passive components and Civil Engineering features. The inspection results are used to demonstrate that the effects of aging will be adequately managed so that the intended function(s) will be maintained consistent with the current licensing basis for the period of extended operation.

Baseline inspections of structures in scope of Maintenance Rule were completed between 1997 and 2003. The first periodic follow up inspection was completed in 2009.

Overall, the baseline inspection report concluded that the plant's structures were in good condition and performing well. Conditions that were noted as having deficiencies were documented and addressed under the Corrective Action Program.

Many of the observed conditions were noted for further review during the follow-up periodic inspections. Though the concrete Intake Structure refurbishment program was in progress to repair self-identified structural degradation prior to the Intake being scoped into the Maintenance Rule Program (October 1996), the Intake Structure was conservatively placed into Maintenance Rule (10 CFR 50.65) goal setting status (a)(1). This action was due to the chloride environment that the intake was exposed to and the extent of repairs being required to restore the structure. As a result of an aggressive refurbishment program, the necessary repairs and remediation were performed and the Intake Structure was removed from (a)(1) status in October 1998.

The first periodic follow-up inspection and report was completed in early 2009. The overall condition found the plant structures in good condition. The inspection found no conditions requiring immediate maintenance or repairs. Conditions noted were minor in nature and did not affect the structural integrity of any of the structures inspected. In some cases, corroded steel that was painted as a result of the baseline inspections had corrosion reappear. In such cases, the subject steel was located in damp or wet environments, primarily due to its exposure to the harsh coastal environment. These areas were re-identified in the Corrective Action Program to perform recoating. Some minor concrete cracking and spalling was also identified in the Turbine Building at areas near ventilation louvers. Rainwater leaking through exterior wall louvers has caused embedded reinforcing steel to corrosion and subsequently concrete cracking and spalling. The areas identified are relatively small and do not currently adversely impact the structural integrity of the structural element. However, concrete repairs and/or further examinations will be performed to prevent further degradation to the concrete elements.

The Intake Structure continues to require attention and remediation due to its location in a harsh coastal environment. As a result of a negative trend in concrete degradation, the Intake was placed back into Maintenance Rule goal setting (a)(1) status in December 2005. A repair plan is in place in order to return the Intake Structure to (a)(2) status by 2010.

The ASW pump bay, traveling screens and bar racks are currently inspected by divers on a refueling cycle interval. Any degradation noted during these inspections are entered into the corrective action program, evaluated for impact on the ASW system operability and identified for long term corrective actions as required. Inspections performed todate have not identified any degradation that would impact the ability of the ASW system to perform its intended function.

PH, sulfates, and chlorides were monitored monthly at DCPP powerblock locations from August 2008 through July 2009 to obtain data sufficient for making a

groundwater aggressiveness determination. The groundwater sample results show that DCPP powerblock groundwater is non-aggressive (pH>6.9, chlorides<215ppm, and sulfates<567ppm).

The SMP has identified and corrected age-related issues for in-scope structures and structural components. On-going identification of degradation and corrective action prior to loss of intended function provides reasonable assurance that the program is effective for managing the aging effects of structural components.

The DCPP operating experience findings for this program identified no unique plant specific operating experience; therefore DCPP operating experience is consistent with NUREG-1801.

Conclusion

The continued implementation of the Structures Monitoring Program will provide reasonable assurance that aging effects will be managed such that the structures within the scope of this program will continue to perform their intended functions consistent with the current licensing basis for the period of extended operation.

B2.1.33 RG 1.127, Inspection of Water-Control Structures Associated with Nuclear Power Plants

Program Description

The RG 1.127, Inspection of Water-Control Structures Associated with Nuclear Power Plants program, which is implemented as part of the Structures Monitoring Program (SMP), manages cracking, loss of material, loss of form, loss of bond, loss of strength, and increase in porosity and permeability due to extreme environmental conditions and the effects of natural phenomena. DCPP is not committed to Regulatory Guide 1.127, Inspection of Water-Control Structures Associated with Nuclear Power Plants as part of the current licensing basis, but the program includes all structural components within the scope of license renewal that are addressed by RG 1.127.

The water-control structures included within the scope of the SMP are:

Intake Structure
Discharge Structure
Circulating Water Conduits
Earth Slopes over the ASW pipes
East and West Breakwaters
Raw Water Reservoirs

The RG 1.127, Inspection of Water-Control Structures Associated with Nuclear Power Plants program is in compliance with RG 1.127 which requires an inspection frequency of five years and with the requirements of 10 CFR 50.65 which requires a 10-year inspection frequency and includes inspection and surveillance activities for the water-control structures associated with emergency cooling water systems. The program manages aging by providing measures for monitoring that detect the effects of aging prior to loss of intended function.

Concrete is monitored for spalling, cracking, delamination, efflorescence, excessive deformations or settlement, and improper drainage or ponding. Earthworks are monitored for erosion settlement, slope stability, seepage, drainage, slope protection, leakage from reservoirs, damage from vegetation or animals and damage to reservoir liners.

Inspections are scheduled such that the accessible areas of both units are inspected at a frequency of no more than five years. The program is designed to monitor and observe the behavior of water-control structures during operation. Special monitoring may be prescribed at closer interval or following severe environmental

phenomena. Results from these inspections are used to check conditions of structures and to evaluate their safety and operational adequacy.

The program provides guidance for the determination of performance criteria for SSCs included within the scope of the Maintenance Rule. These guidelines were used to establish the inspection attributes for SSCs monitored by the DCPP SMP. The DCPP SMP uses "Acceptable", "Acceptable with Deficiencies" and "Unacceptable" to classify levels of aging effect for each inspection attribute. The classifications and acceptance criteria are based on DCPP design bases documents, current licensing bases, and industry standards, such as ACI 349.3R-96 and ASCE 11-90.

Any evidence of aging effects is evaluated by engineering to ensure the safety and adequacy of water-control structures by promptly detecting and correcting aging effects that deviate from the original specifications. Subsequent inspections include a comparison of previous reports to current conditions.

NUREG-1801 Consistency

The RG 1.127, Inspection of Water-Control Structures Associated with Nuclear Power Plants program, which is implemented as part of the Structures Monitoring Program, is an existing program that is consistent with NUREG-1801, Section XI.S7, RG 1.127, Inspection of Water-Control Structures Associated with Nuclear Power Plants.

Exceptions to NUREG-1801

None

Enhancements

None

Operating Experience

DCPP structural monitoring procedures have been effective in monitoring and inspecting the water control structures for aging effects before loss of intended function occurs.

The Intake Structure is currently monitored and inspected in accordance with DCPP procedures on refueling cycle intervals. Since 1996, the Intake Structure has been placed in Maintenance Rule (MR) Goal Setting (a)(1) status twice. Each occurrence indicated further the adverse impacts of harsh saltwater environment on concrete degradation. With the current refurbishment program and procedural controls in

place, the intake structure is expected to resume monitoring under MR (a)(2) status by 2010. In place procedures also continue to provide an effective method and extensive guidelines to accurately assess relevant conditions within the Intake Structure.

As evident by the results of the DCPP saltwater systems monitoring, intake structure concrete degradation has been limited to locations above the water level (i.e. mean sea level), with the highest concentration of degradation occurring within the "splash zone", where the structure is not constantly submerged. Monitoring of submerged concrete (i.e. below mean sea level) during periodic dewatering activities have identified negligible evidence of degradation. The favorable condition is attributed to the lack of oxygen found in these submerged areas.

The Discharge Structure which is currently being monitored and inspected in accordance with DCPP procedures on refueling cycle intervals has had some minor concrete repairs were made to the exterior incline wall in early 2002, as a result of the inspection program. However, the discharge structure is considered to be in acceptable condition.

The intake circulating water conduits (CWC) are currently monitored and inspected in accordance with DCPP procedures on refueling cycle intervals. The intake CWCs were equipped with an effectively operating cathodic protection (CP) system in the mid-1990s as a preventive measure. The intake CWCs are currently evaluated in acceptable condition and recent inspections have found no increase of concrete degradation. The discharge CWCs are not equipped with a CP system. Discharge CWCs are also currently evaluated to be in acceptable condition. It should be noted that portions of the CWCs interior concrete are not visible for detailed inspections due to marine growth found on the interior wall surfaces. A schedule is being developed to remove the marine growth in order to further enhance the monitoring process of the Discharge CWCs.

In order to ensure an adequate earth slope (earth cover) over the buried ASW piping for pipe protection, an inspection is currently on a three-year interval. Since implementation of this procedure (April 1999), no indication of earth cover has been lost. Earth cover over ASW pipes is in good condition.

East and West Breakwater are currently being inspected on an annual basis in accordance with a plant surveillance procedure. Routine surveillance of the east and west breakwaters provides a means to monitor their structural integrity. This monitoring process determines whether any settling or displacement that occurs in either breakwater has resulted in the elevation of the concrete cap(s) of any section(s) of the breakwater being reduced to less than mean low-low water level.

Routine monthly surveillance during the fall, winter and early spring will allow any breakwater degradation to be detected early and remedial action to be taken, if required. To date, no adverse settlement, displacement of degradation has been observed on either breakwater.

Raw Water Reservoirs, 1A and 1B, are inspected in accordance with reoccurring maintenance plans and procedures to monitor for any conditions that may impose operational constraints on the system. Attributes of the inspection included surveillance of shoreline conditions, sedimentation growth, liner conditions and leakage potentials. The reservoirs are monitored on a five-year (maximum) interval. The monitoring of the raw water reservoirs indicated the overall condition is good. Some repairs have been performed on the liner as identified during the effective monitoring program.

The DCPP operating experience findings for this program identified no unique plant specific operating experience; therefore DCPP operating experience is consistent with NUREG-1801.

Conclusion

The continued implementation of the RG 1.127, Inspection of Water-Control Structures Associated with Nuclear Power Plants program, which is implemented as part of the Structures Monitoring Program, will provide reasonable assurance that aging effects will be managed such that the structures within the scope of this program will continue to perform their intended functions consistent with the current licensing basis for the period of extended operation.

B2.1.34 Fuse Holders

Program Description

The Fuse Holders program manages thermal fatigue, mechanical fatigue, vibration, chemical contamination and corrosion of the metallic portions of fuse holders to ensure that fuse holders within the scope of license renewal are capable of performing their intended function. The fuses within the scope of license renewal at DCPP are not frequently removed or replaced.

Fuse holders are constructed of blocks of rigid insulating material, such as phenolic resins with metallic clamps (clips) that hold each end of the fuse. The clamps, which are made of copper alloy, are spring-loaded clips that hold the fuse ferrules or blades in place. The insulating phenolic material aging effects are managed under the Electrical Cables and Connections Not Subject to 10 CFR 50.49 Environmental Qualification Requirements program (B2.1.24). NUREG/CR-6763 (NUREG-1760), *Aging Assessment of Safety-Related Fuses Used in Low and Medium-Voltage Applications in Nuclear Power Plants* study determined that fuses are susceptible to aging that can lead to failure, however, the occurrence is infrequent.

The fuse holders that perform a license renewal intended function located outside of active devices will be tested for deterioration of the metallic clamps by using thermography. The fuse holder testing will be performed at least once every 10 years. The first test will be completed prior to the period of extended operation.

The acceptance criteria for thermography testing will be based on the temperature rise above the reference temperature. The reference temperature will be ambient temperatures or the baseline temperature data from the same type of connections being tested. An engineering evaluation that considers the age and operating environment of the fuse holders will be performed when the test acceptance criteria are not met. The engineering evaluation considers the guidance provided in SAND 96-0344, Section 5.2, *Maintenance, Surveillance, and Condition Monitoring Techniques for Evaluation of Electrical Cable and Terminations*, the significance of the test results, the operability of the fuse holder, the reportability of the event, the extent of the concern, the potential root causes, the probability of recurrence, and the corrective actions required.

Corrective actions for conditions that are adverse to quality are performed in accordance with the Corrective Action Program as part of the QA program. The corrective action process provides reasonable assurance that deficiencies adverse to quality are either promptly corrected or are evaluated to be acceptable.

The Fuse Holders program is an inspection program, no actions are taken as part of this program to prevent or mitigate aging degradation. Trending actions are not included as part of this program because the ability to trend test results is dependent on the specific type of test chosen.

NUREG-1801 Consistency

The Fuse Holders program is a new program that, when implemented, will be consistent with NUREG-1801, Section XI.E5, Fuse Holders.

Exceptions to NUREG-1801

None

Enhancements

None

Operating Experience

Operating experience has shown that loosening of fuse holders and corrosion of fuse clips are aging mechanisms that, if left unmanaged, can lead to a loss of electrical continuity function.

The Fuse Holders program is a new program; therefore, plant-specific operating experience to verify the effectiveness of the program is not available. Industry operating experience that forms the basis for these programs is included in the operating experience element of the corresponding NUREG-1801, aging management program description. A review of plant operating experience for fuse holders has identified instances of loose or corroded fuse holders. Corrective actions taken include plant procedure revisions to verify that fuse holders are tight, adjusting fuse clips, and application of corrosion inhibiting paste or grease. None of these instances involved fuse holders within the scope of this program.

As additional industry and applicable plant-specific operating experience become available, the operating experience will be evaluated and appropriately incorporated into the program through the DCPP Corrective Action Program and Operating Experience Program. This ongoing review of operating experience will continue throughout the period of extended operation, and the results will be maintained on site. This process will confirm the effectiveness of this new license renewal aging management program by incorporating applicable operating experience and performing self assessments of the program.

The DCPP operating experience findings for this program identified no unique plant specific operating experience; therefore DCPP operating experience is consistent with NUREG-1801.

Conclusion

The implementation of the Fuse Holders program will provide reasonable assurance that aging effects will be managed such that the systems and components within the scope of this program will continue to perform their intended functions consistent with the current licensing basis for the period of extended operation.

B2.1.35 Electrical Cable Connections Not Subject to 10 CFR 50.49 Environmental Qualification Requirements

Program Description

The Electrical Cable Connections Not Subject to 10 CFR 50.49 Environmental Qualification Requirements program manages the aging effects of loosening of bolted external connections due to thermal cycling, ohmic heating, electrical transients, vibration, chemical contamination, corrosion, and oxidation to ensure that electrical cable connections not subject to the environmental qualification (EQ) requirements of 10 CFR 50.49 and within the scope of license renewal are capable of performing their intended function.

As part of the DCPP Predictive Maintenance Program, infrared thermography testing is being performed on non-EQ electrical cable connections associated with active and passive components within the scope of license renewal. A representative sample of external connections will be tested prior to the period of extended operation using infrared thermography to confirm that there are no aging effects requiring management.

The infrared thermography will detect loosening of bolted connections or high resistance of cable connections due to thermal cycling, ohmic heating, electrical transients, vibration, chemical contamination, corrosion, and oxidation. The selected sample to be tested is based upon application (medium and low voltage), circuit loading (high load), and environment (temperature, high humidity, vibration, etc.). The technical basis for the sample selection is documented. The acceptance criteria for thermography testing will be based on the temperature rise above the reference temperature. The reference temperature will be ambient temperatures or the baseline temperature data from the same type of connections being tested. If thermography inspection is not possible or if the results are inconclusive, the connection integrity can be confirmed by another acceptable connection integrity test method, such as contact resistance.

In accordance with LR-ISG-2007-02, the one-time testing of a sample of non-EQ electrical cable connectors is representative, with reasonable assurance, that non-EQ electrical cable connections within similar application, circuit loading conditions, and environments are bounded by the testing.

No actions are taken as part of this program to prevent or mitigate aging degradation. Trending actions are not included as part of this program because the ability to trend test results is dependent on the specific type of test chosen.

The DCPP Corrective Action Program will be used to perform an evaluation if the test acceptance criteria are not met. The evaluation will consider the extent of condition, the indication of aging effect, and changes to the one-time inspection program that may include increased sample selection, increased inspection frequency, and replacement or repair of the affected cable connections.

Corrective actions for conditions that are adverse to quality will be performed in accordance with the Corrective Action Program as part of the QA program. The corrective action process provides reasonable assurance that deficiencies adverse to quality are either promptly corrected or are evaluated to be acceptable.

NUREG-1801 Consistency

The Electrical Cable Connections Not Subject to 10 CFR 50.49 Environmental Qualification Requirements program is a new program that, when implemented, will be consistent, with exception to NUREG-1801, Section XI.E6, Electrical Cable Connection Not Subject to 10 CFR 50.49 Environmental Qualification Requirements.

Exceptions to NUREG-1801

Program Elements Affected

Scope of Program - Element 1

NUREG-1801, Section XI.E6, Element 1 specifies the scope of the electrical cable connections program be “connections associated with cables in scope of license renewal which are associated with active or passive components.” The scope of the Electrical Cable Connections Not Subject to 10 CFR 50.49 Environmental Qualification Requirements program will be the “external electrical connections at active and passive devices within the scope of license renewal,” which is consistent with the proposed LR-ISG-2007-02.

Detection of Aging Effects - Element 4

NUREG-1801, Section XI.E6, Element 4 specifies electrical connections will be tested at least once every 10 years. The Electrical Cable Connections Not Subject to 10 CFR 50.49 Environmental Qualification Requirements program requires a one-time inspection of a representative sample of external electrical connections within the scope of license renewal. This one-time inspection will be performed prior to the period of extended operation, which is consistent with the proposed LR-ISG-2007-02.

Enhancements

None

Operating Experience

Operating experience has shown that loosening of connections and corrosion of connections are aging mechanisms that, if left unmanaged, could lead to a loss of electrical continuity and potential arcing or fire.

The Electrical Cable Connections Not Subject to 10 CFR 50.49 Environmental Qualification Requirements program is a new program; therefore, plant-specific operating experience to verify the effectiveness of the program is not available. A review of plant operating experience identified the following regarding the loosening of bolted electrical connections and terminations. DCPP routinely performs infrared thermography on electrical components and connections. A review of the plant operating experience identified electrical cable connections showing thermal anomalies, which are noteworthy temperature variances between phases, or from normal. When detected, the condition is either monitored closely for degradation or corrective action is initiated. No loss of equipment intended function has occurred due to these thermal anomalies and corrective actions taken to resolve these anomalies have prevented the loss of function. DCPP has experienced corrosion of battery connections and terminals. The terminals were cleaned at the next available outage. No loss of intended function occurred as a result of the corrosion.

Industry operating experience that forms the basis for these programs is included in the operating experience element of the corresponding NUREG-1801, aging management program description.

As additional industry and applicable plant-specific operating experience becomes available, the operating experience will be evaluated and appropriately incorporated into the program through the DCPP Corrective Action Program and Operating Experience Program. This ongoing review of operating experience will continue throughout the period of extended operation, and the results will be maintained on site. This process will confirm the effectiveness of this new license renewal aging management program by incorporating applicable operating experience and performing self assessments of the program.

The DCPP operating experience findings for this program identified no unique plant specific operating experience; therefore DCPP operating experience is consistent with NUREG-1801.

Conclusion

The implementation of Electrical Cable Connections Not Subject to 10 CFR 50.49 Environmental Qualification Requirements program will provide reasonable assurance that aging effects will be managed such that the systems and components within the scope of this program will continue to perform their intended functions consistent with the current licensing basis for the period of extended operation.

B2.1.36 Metal Enclosed Bus

Program Description

The Metal Enclosed Bus program manages the aging effects of loose connections, embrittlement, cracking, melting, swelling, or discoloration of insulation, loss of material of bus enclosure assemblies, hardening of boots and gaskets, and cracking of internal bus supports to ensure that metal enclosed buses within the scope of license renewal are capable of performing their intended function. The Metal Enclosed Buses (MEBs) within the scope of this program are the MEBs that are used during station blackout recovery. DCPP is currently performing metal enclosed bus work order inspection activities in response to DCPP plant-specific operating experience. The scope of metal enclosed bus sections in the existing DCPP maintenance inspections include bus sections that are specifically included within the scope of license renewal due to being part of the station blackout recovery path and conservatively includes other metal enclosed sections whose failure could effect the station blackout recovery buses.

Prior to the period of extended operation and every 10 years thereafter, internal portions of in-scope MEBs are visually inspected for cracks, corrosion, foreign debris, excessive dust buildup, and evidence of water intrusion. The bus insulation is inspected for signs of embrittlement, cracking, melting, swelling, hardening or discoloration, which may indicate overheating or aging degradation. The internal bus supports are inspected for structural integrity and signs of cracks. The bus enclosure assemblies are inspected for loss of material due to corrosion and hardening of boots and gaskets.

Prior to the period of extended operation and every 10 years thereafter a sample of the in scope MEB accessible bolted connections is checked for evidence of overheating. Contact resistance test or thermography is performed on a sample of the accessible connections. As an alternative to thermography or measuring connection resistance of bolted connections, for the accessible bolted connections that are covered with insulating material DCPP may use visual inspection of insulation material to detect surface anomalies, such as discoloration, cracking, chipping or surface contamination. If this alternative visual inspection is used to check bolted connections, the first inspection will be completed prior to the period of extended operation and every five years thereafter.

The acceptance criteria for thermography testing will be based on the temperature rise above the reference temperature. The reference temperature will be ambient temperatures or the baseline temperature data from the same type of connections

being tested. When contact resistance testing is used the accepted value shall be based on the type of test used and the configuration of the connection. The acceptance criterion for insulation material covering bolted connections is the absence of heat related anomalies.

Additional investigation and evaluation will be performed when the acceptance criteria are not met. Corrective actions may include but are not limited to cleaning, drying, increased inspection frequency, replacement, or repair of the affected MEB components. When an unacceptable condition or situation is identified, a determination will be made as to whether the same condition or situation is applicable to other accessible or inaccessible MEBs.

The MEB program is an inspection program. No actions are taken as part of this program to prevent or mitigate aging degradation. Trending actions are not included as part of this program because the ability to trend inspection results is limited.

NUREG-1801 Consistency

The Metal Enclosed Bus program is an existing program that, following enhancement, will be consistent with NUREG-1801, Section XI.E4, Metal Enclosed Bus.

Exceptions to NUREG-1801

None

Enhancements

Prior to the period of extended operation, the following enhancement will be implemented in the following program elements:

Scope of Program - Element 1, Preventive Actions - Element 3, Detection of Aging Effects - Element 4, Acceptance Criteria - Element 6 and Corrective Actions - Element 7

The existing bus work order inspection activities for inspection and testing of the MEBs will be proceduralized to include specific inspection scope, frequencies and actions to be taken when acceptance criteria are not met.

Operating Experience

Industry experience has shown that failures have occurred on metal enclosed buses caused by cracked insulation and moisture or debris buildup internal to the metal enclosed bus. Experience has also shown that bus connections in the metal

enclosed buses exposed to appreciable ohmic heating during operation may experience loosening due to repeated cycling of connected loads. NRC Information Notice 2000-14, *Non-Vital Bus Fault Leads to Fire and Loss of Offsite Power* and Information Notice 89-94, *Electrical Bus Bar Failures* are examples of non-segregated bus duct failures.

NRC Information Notice 2000-14 discusses a 12 kV Bus fault that occurred on DCPP Unit 1. The corrective actions, in response to the event included:

- Replaced aluminum bus with copper
- Added Belleville washers to bolted connections. The washers are non-electroplated to preclude hydrogen embrittlement.
- Bus cleaning, micro-ohm testing and bolting retorque

A review of plant operating experience identified four instances of cracked welds in the 25 kV iso-phase bus neutral enclosures and three instances of cracked, corroded or loose 4 kV bus supports. In addition, instances of Noryl insulation aging were identified during MEB work order inspection activities in the 4 kV bus and the 12 kV aluminum bus ducts that were found to be corroded. All deficiencies were repaired. A periodic bus inspection has been implemented to assure bus availability.

The DCPP operating experience findings for this program identified no unique plant specific operating experience; therefore DCPP operating experience is consistent with NUREG-1801.

Conclusion

The continued implementation of Metal Enclosed Bus program will provide reasonable assurance that aging effects will be managed such that the systems and components within the scope of this program will continue to perform their intended functions consistent with the current licensing basis for the period of extended operation.

B2.1.37 Nickel-Alloy Aging Management Program

Program Description

The Nickel-Alloy Aging Management program manages cracking due to primary water stress corrosion cracking (PWSCC) in reactor coolant system (RCS) locations that contain Alloy 600. Aging management requirements for nickel-alloy penetration nozzles welded to the upper reactor vessel closure head noted in the Nickel-Alloy Penetration Nozzles Welded to the Upper Reactor Vessel Closure Heads of Pressurized Water Reactors program (B2.1.5) are included in the DCPP Nickel-Alloy Aging Management Program and are repeated here for review convenience. The scope of the DCPP Nickel Alloy Aging Management Program consists of the following reactor coolant pressure boundary (RCPB) locations fabricated with Alloy 600: control rod drive mechanism (CRDM) nozzles, head vent/instrument ports/spare reactor vessel head nozzles, bottom mounted instrumentation (BMI) penetrations, reactor vessel inlet nozzle, reactor vessel outlet nozzle, and core support lug. The term Alloy 600 is used throughout this aging management program to represent Nickel-Alloy 600 material and Nickel-Alloy 82/182 weld metal. Non-Alloy 600 nickel components (e.g. Alloy 690 or welds made of Alloy 52/152) are not included in this program but are subject to the ASME Section XI Inservice Inspection (B2.1.1) requirements.

The Nickel-Alloy Aging Management Program uses inspections, mitigation techniques, repair/replace activities and monitoring of operating experience to manage the aging of Alloy 600 at DCPP. Detection of indications is accomplished through a variety of examinations consistent with ASME Section XI Subsections IWB, ASME Code Case N-729-1, ASME Code Case N-722, and EPRI Report 1010087 (MRP-139) issued under NEI 03-08 protocols. Mitigation techniques are implemented when appropriate to preemptively remove conditions that contribute to PWSCC. Repair/replacement activities are performed to proactively remove or overlay Alloy 600 material, or as a corrective measure in response to an unacceptable flaw in the material. Mitigation and repair/replace activities are consistent with those detailed in MRP-139. Operating experience was reviewed and is continually monitored to provide improvements and modifications to the DCPP Nickel-Alloy Aging Management Program as needed.

Aging Management Program Elements

The results of an evaluation of each element against the 10 elements described in Appendix A of NUREG-1800, *Standard Review Plan for Review of License Renewal Applications for Nuclear Power Plants* are provided below.

Scope of Program – Element 1

All Alloy 600 locations within the reactor coolant system pressure boundary (RCPB) are included within the scope of this program. Aging management requirements for nickel-alloy penetration nozzles welded to the upper reactor vessel closure head noted in the Nickel-Alloy Penetration Nozzles Welded to the Upper Reactor Vessel Closure Heads of Pressurized Water Reactors program (B2.1.5) are included in the Nickel Alloy Aging Management Program and are repeated here for review convenience. The term Alloy 600 will be used throughout this program to represent nickel-alloy 600 material and nickel-alloy 82/182 weld metal.

The Nickel Alloy Aging Management Program identifies the following RCPB Alloy 600 locations:

- CRDM nozzles (61 CRDM nozzles including weld at nozzle to vessel cladding weld and nozzle to stainless steel housing)
- head vent nozzle, elbow, and horizontal pipe including welds at nozzle to vessel cladding, nozzle to elbow, elbow to horizontal pipe, and horizontal pipe to stainless steel safe-end/piping - Note: head vent nozzle includes instrument ports and spare nozzles
- reactor vessel inlet and outlet nozzle safe-end weld
- BMI penetrations (58 BMI nozzles including welds at BMI nozzle to vessel cladding and BMI nozzle to stainless steel safe-end/piping)
- core support lug including welds at core support lug attachment, core support lug inlay weld (Unit 1 only), and core support lug inlay tie-in weld (Unit 1 only)

DCPP steam generators have been replaced with steam generators fabricated with Alloy 690 material. Aging of steam generator tubes is managed by the Steam Generator Tubing Integrity program (B2.1.8) and is not covered by this program.

The reactor vessel leakage monitoring tube is fabricated of Alloy 600 with Alloy 182 welds but is not within the RCS pressure boundary. Therefore it is not within the scope of this program.

The Unit 1 pressurizer locations are composed of stainless steel and thus not in the scope of this program. An Alloy 690 full structural overlay was performed for each Alloy 600 location of the Unit 2 pressurizer. Therefore the Alloy 600 welds are no longer credited as the pressure boundary.

The Unit 1 reactor pressure vessel (RPV) head is planned to be replaced during the 16th refueling outage beginning October 2010 and the Unit 2 RPV head was replaced during the 15th refueling outage in October 2009. All components penetrating the new reactor vessel closure heads and welded to the inner surfaces

of the reactor vessel closure heads including the head vent piping and elbows will be replaced with Alloy 690.

Non-Alloy 600 nickel components (e.g. Alloy 690 or welds made of Alloy 52/152) are not included in this program but are subject to the ASME Section XI Inservice Inspection (B2.1.1) requirements.

Preventive Actions – Element 2

The Nickel-Alloy Aging Management Program has many potential mitigation strategies that remove one or more of the three conditions that control primary water stress corrosion cracking (susceptible material, tensile stress field, supporting environment). Mitigation activities that have been successfully performed for at least one US PWR plant include weld overlays, replacement of Alloy 600 (as a pre-planned activity), and mechanical stress improvement process (MSIP). Full structural weld overlays may be used either as a mitigation strategy or as a repair method. This method provides structural reinforcement at the (potentially) flawed location, such that adequate load-carrying capability is provided by the overlay. Components that have full structural weld overlays comprised of Alloy 690 are considered to be Alloy 690 and no longer in the DCPP Nickel-Alloy Aging Management Program. MSIP is a mechanical process that places the component surface in contact with the primary water in a compressive state, thereby removing the tensile stresses needed for initiation of PWSCC.

Specific mitigation strategies will be determined by plant-specific and industry operating experience. The Water Chemistry program (B2.1.2) provides preventive actions for monitoring and control of the supporting environment for PWSCC.

Parameters Monitored/Inspected – Element 3

The Nickel-Alloy Aging Management Program monitors for cracking due to PWSCC. Loss of material due to boric acid wastage is also used as an indication of cracking due to PWSCC. For the reactor vessel upper head examinations, the DCPP Nickel-Alloy Aging Management Program will utilize bare metal visual, surface, and volumetric examination techniques for early detection of PWSCC in Alloy 600 components. Visual exams are employed to detect evidence of leakage from pressure retaining components within the RCS due to cracking and/or discontinuities and imperfections on the surface of the component. Volumetric examination indicates the presence of cracking/discontinuities throughout the volume of material.

The DCPP Inservice Inspection (ISI) Program and Plan will provide visual, surface, and volumetric examinations to support the Nickel-Alloy Aging Management Program.

Detection of Aging Effects – Element 4

The Nickel-Alloy Aging Management Program utilizes various visual, surface, and volumetric examination techniques for early detection of PWSCC in Alloy 600 components:

1. VT-2 examinations, governed by ASME Section XI, section IWA-5000, are conducted to detect evidence of leakage from pressure retaining components within the RCS.

2. Bare metal visual (BMV) examinations, similar to VT-2 examinations, are conducted to detect evidence of leakage from pressure retaining components within the RCS. Unlike VT-2 examinations, removal of insulation is required for BMV examinations to allow direct access to the bare metal surface.

3. Surface and volumetric examinations indicate the presence of discontinuities throughout the volume of material. DCPP uses ultrasonic testing (UT) for volumetric examinations.

The ISI Program and Plan provides visual, surface, and volumetric examinations to support the Nickel-Alloy Aging Management Program for the components identified in Element 1.

<u>Control Rod Drive Mechanism and Head Vents</u>

BMV examinations are implemented consistent with the requirements of Table 1, item B4.10 in ASME Code Case N-729-1, subject to the conditions specified in 10 CFR 50.55a(g)(6)(ii)(D)(2) through (6).

<u>Bottom Mounted Instrument Penetrations, Reactor Vessel Inlet & Reactor Vessel Outlet Nozzle</u>

BMV examinations are implemented consistent with appropriate requirements of Table 1, item B15.80 in ASME Code Case N-722 subject to the conditions listed in 10 CFR 50.55a(g)(6)(ii)(E)(2) through (4).

<u>Core Support Lugs</u>

VT-2 visual examinations are conducted in accordance with the Inservice Inspection (ISI) Program Plan.

Monitoring and Trending – Element 5

Control Rod Drive Mechanism and Head Vents

BMV examination frequencies for Reactor Vessel Upper Head Inspections are identified by the Nickel-Alloy Aging Management Program for Alloy 600 locations and are consistent with ASME Code Case N-729-1. Volumetric and Surface examinations will be implemented in accordance with appropriate requirements of Table 1, item B4.20 in ASME Code Case N-729-1, subject to the conditions specified in 10 CFR 50.55a(g)(6)(ii)(D)(2) through (6).

Bottom Mounted Instrument Penetrations, Reactor Vessel Inlet and Reactor Vessel Outlet Nozzle

BMV examination frequencies for BMI penetrations are identified by the Nickel-Alloy Aging Management Program for Alloy 600 locations and are consistent with ASME Code Case N-722. Examinations will be implemented in accordance with appropriate requirements of Table 1 in ASME Code Case N-722 subject to the conditions listed in 10 CFR 50.55a(g)(6)(ii)(E)(2) through (4). Examination frequencies for reactor vessel inlet and outlet nozzles identified by the Nickel-Alloy Aging Management Program are consistent with ASME Code Case N-722, Table 1, item B15.90 (outlet nozzle) and item B15.95 (inlet nozzle).

Core Support Lug

The core support lug VT-2 examination frequency is in accordance with the ISI Program Plan.

Due to the repair/replace strategy implemented for indications/cracking, trending is not performed in the Nickel-Alloy Aging Management Program.

Acceptance Criteria – Element 6

Evaluations and acceptance criteria are in accordance with industry standards (e.g., ASME Code) or meet the acceptance of the NRC. For components included in EPRI 1010087 (MRP-139), as listed in the Nickel-Alloy Aging Management Program, it requires that all indications found during inspections must be evaluated per ASME Section XI requirements.

Control Rod Drive Mechanism and Head Vents

Relevant flaw indications detected as a result of bare metal visual examinations are evaluated in accordance with acceptable flaw evaluation criteria provided in ASME Code Case N-729-1, Section 3140.

Relevant flaw indications detected as a result of volumetric and surface examinations will be evaluated in accordance with acceptable flaw evaluation criteria provided in ASME Code Case N-729-1, Section 3130.

Bottom Mounted Instrument Penetrations, Reactor Vessel Inlet and Reactor Vessel Outlet Nozzle

For BMI penetrations relevant flaw indications detected as a result of BMV examinations are evaluated in accordance with acceptable flaw evaluation criteria (IWB-3522) provided in ASME Code CaseN-722, subject to the conditions listed in 10 CFR 50.55a(g)(6)(ii)(E)(2) through (4).

For reactor vessel inlet and outlet nozzles relevant flaw indications detected as a result of BMV examinations will be evaluated in accordance with acceptable flaw evaluation criteria (IWB-3522) provided in ASME Code Case N-722, subject to the conditions listed in 10 CFR 50.55a(g)(6)(ii)(E)(2) through (4).

Corrective Actions – Element 7

Relevant indications failing to meet applicable acceptance criteria are repaired or evaluated in accordance with plant procedures. Appropriate codes and standards are specified in the plant ASME Section XI Repair/Replacement Program and Implementation procedure and design drawings. Quality assurance requirements for repair and replacement activities are also included in plant procedures.

A self assessment of the Nickel-Alloy Aging Management Program is conducted following two outages on each unit (approximately every three years).

The self assessment includes a review of pertinent industry operating experience (inspection results and any leakage or cracking found in the industry), NDE technique and tooling improvements, development of new mitigation techniques, status of planned mitigation or replacement projects, lessons learned and regulatory changes.

DCPP QA procedures, review and approval processes, and administrative controls are implemented in accordance with the requirements of 10 CFR 50, Appendix B that are acceptable in addressing corrective actions. The QA program includes elements of corrective action, confirmation process and administrative controls and is applicable to the safety-related and nonsafety-related systems, structures and components (SSCs) that are subject to aging management review.

Confirmation Process – Element 8

DCPP site QA procedures, review and approval processes are implemented in accordance with the requirements of 10 CFR 50, Appendix B and include confirmation processes as described in DCPP FSAR Section 17.2 and provisions that specify when follow-up actions are required to be taken to verify that corrective actions are effective and those implemented to address significant conditions adverse to quality, are effective in preventing recurrence of the condition.

Administrative Controls – Element 9

DCPP site QA procedures, review and approval processes are implemented in accordance with the requirements of 10 CFR 50, Appendix B and include administrative controls as described in DCPP FSAR Section 17.2 and provisions that specify when follow-up actions are required to be taken to verify that corrective actions are effective and those implemented to address significant conditions adverse to quality, are effective in preventing recurrence of the condition.

Operating Experience — Element 10

Operating experience at DCPP is evaluated and implemented to ensure that the Nickel-Alloy Aging Management Program maintains its primary goal of ensuring the integrity of the RCS pressure boundary. This is accomplished by promptly identifying and documenting (using the corrective action program) any conditions or events that suggest Alloy 600 degradation. In addition, industry operating experience, self assessments, and independent audits provide additional assurance that the program remains effective.

PG&E has responded to the various NRC and industry publications on Nickel-Alloy aging issues, including NRC Generic Letter 97-01, NRC Information Notice 2000-17, NRC Information Notice 2001-05, NRC Bulletin 2001-01, NRC Bulletin 2002-01, NRC Bulletin 2002-02, NRC Bulletin 2003-2 and NRC Bulletin 2003- -11.

DCPP has proactively replaced Alloy 600 material with PWSCC resistant Alloy 690 material. The Unit 1 steam generators containing Alloy 600 were replaced in 1R15 (February 2009) and the Unit 2 steam generators containing Alloy 600 were replaced in 2R14 (February 2008). The replacement steam generators were fabricated with Alloy 690 material. For the Unit 2 pressurizer, an Alloy 690 full structural weld overlay was performed for each Alloy 600 location during refueling outage 2R14 (February 2008). The Unit 2 reactor vessel head was replaced during 2R15 (October 2009) and the Unit 1 reactor vessel head replacement is scheduled for 1R16 (October 2010). All components penetrating the new reactor vessel

closure heads and welded to the inner surfaces of the reactor vessel closure heads will be replaced with Alloy 690.

Based on a review of DCPP operating experience, the Nickel-Alloy Aging Management Program has been effective in ensuring that the RCS will continue to operate within its licensing basis. The only leaks were four leaks on stainless steel CRDM canopy seal welds (two on each unit). These leaks were identified during reactor vessel top and bottom head inspections. The leaks were repaired. These findings, coupled with the aggressive Alloy 600 replacement with PWSCC resistant Alloy 690, provide reasonable assurance that the systems, structures and components containing Nickel-Alloy at DCPP will continue to perform their intended function during the period of extended operation.

Enhancements

None

Conclusion

The continued implementation of the Nickel-Alloy Aging Management Program provides reasonable assurance that aging effects will be managed such that the systems, structures and components within the scope of this program will continue to perform their intended functions consistent with the current licensing basis for the period of extended operation.

B2.1.38 Transmission Conductor, Connections, Insulators and Switchyard Bus and Connections

Program Description

The scope of the Transmission Conductor, Connections, Insulators and Switchyard Bus and Connections aging management program includes the 230 kV and 500 kV components required for station blackout recovery. The 230 kV components include the overhead transmission conductors and connections from the unit startup transformers to disconnects 217 and 219, the 230 kV high voltage insulators, and the switchyard bus and connections between disconnects 217 and 219. The 500 kV components include the overhead transmission conductors and connections from the main transformers to disconnects 533/631 and 543/641, the 500 kV high voltage insulators, and the switchyard bus and connections 533/631 and 543/641 and switchyard breakers 532/632 and 542/642.

PG&E has an existing preventive maintenance program that governs overhead transmission systems. This program is in accordance with the State of California General Order 95, to ensure public safety and reliability. This program requires that all 230 kV and 500 kV transmission lines be inspected by performance of aerial, ground and climbing inspections at specified frequencies. The inspections look for, but are not limited to, insulator, conductor, connector and support degradation including corrosion, mechanical wear, and contamination. Conductors are also monitored for indications of conductor degradation including conductor strand breakage, excessive corrosion and swelling. These inspections are documented, evaluated and trended. Corrective actions for abnormal conditions and failures are performed in accordance with a priority code that is based on the observed condition and its potential to result in failure. Inspection documentation includes who performed the inspection, date, findings of the inspection and recommended maintenance activities. These observed conditions may result in follow-up inspections such as infrared thermography inspections. The components inspected during these inspections include transmission line towers, conductors, connectors, splices and insulators. This program manages degradation of insulator quality due to contamination, loss of transmission line strength and wear.

Prior to the period of extended operation, this existing program will be enhanced by issuance of a DCPP plant procedure to define scope, responsibilities, and inspection activities for the Transmission Conductor, Connections, Insulators and Switchyard Bus and Connections aging management program within the scope of license renewal. This procedure will describe the program, objectives, and requirements to manage transmission conductors and connections, insulators, and switchyard bus

and connections. The inspections look for, but are not limited to, insulator, conductor, connector and support degradation including corrosion, mechanical wear, and contamination. Conductors are also monitored for indications of conductor degradation including conductor strand breakage, excessive corrosion and swelling. The condition of inspected equipment is evaluated for acceptability.

This program considers the technical information provided in EPRI 1001997, *Parameters that Influence the Aging and Degradation of Overhead Conductors*.

Aging Management Program Elements

The results of an evaluation of each element against the 10 elements described in Appendix A of NUREG-1800, *Standard Review Plan for License Renewal Applications for Nuclear Power Plants*, are provided below.

Scope of Program - Element 1

The scope of the Transmission Conductor, Connections, Insulators and Switchyard Bus and Connections aging management program includes the 230 kV and 500 kV components required for station blackout recovery.

The 230 kV components include the overhead transmission conductors and connections from the startup transformers to disconnects 217 and 219, the 230 kV high voltage insulators, and the switchyard bus and connections between disconnects 217 and 219.

The 500 kV components include the overhead transmission conductors and connections from the main transformers to disconnects 533/631 and 543/641, the 500 kV high voltage insulators, and the switchyard bus and connections between disconnects 533/631 and 543/641 and switchyard breakers 532/632 and 542/642.

Enhancements

Prior to the period of extended operation plant procedures will be enhanced to identify components required to support station blackout recovery which are in the scope of license renewal aging management. In the 230 kV switchyard, these are the components between the startup transformers and disconnects 217 and 219. In the 500 kV switchyard these are the components between the main transformers and switchyard breakers 532/632 in Unit 1 and 543/641 in Unit 2.

Preventive Actions - Element 2

The Transmission Conductor, Connections, Insulators and Switchyard Bus and Connections aging management program does not prevent degradation due to aging

effects but provides measures for monitoring to detect the degradation prior to loss of intended function.

Parameters Monitored or Inspected - Element 3

The Transmission Conductor, Connections, Insulators and Switchyard Bus and Connections aging management program is a condition monitoring program. It considers the technical information and guidance in EPRI 1001997, *Parameters that Influence the Aging and Degradation of Overhead Conductors*, and EPRI TR-1013475, *Plant Support Engineering: License Renewal Electrical Handbook*.

The program will monitor high voltage insulators, and their supports for evidence of contamination, corrosion, and wear.

Aluminum buses are inspected for degradation of the bus due to aging that would be evidenced by corrosion buildup or cracks at joints and connections.

Connections are inspected for indication of degraded or degrading connections in the affected or parallel conductor.

Conductors and their supports at Diablo Canyon will be inspected at connections and support points for broken strands and wear.

Detection of Aging Effects - Element 4

Transmission conductors, insulators, connections and supports, switchyard bus and connections, and insulators within the scope of this program undergo annual overhead or ground based visual and infrared thermography inspections of the components. The inspections will be conducted as specified in the Transmission Conductor, Connections, Insulators and Switchyard Bus and Connections aging management program. The inspections look for, but are not limited to, insulator, conductor, connector and support degradation including corrosion, mechanical wear, loss of preload, and contamination. Conductors are also monitored for indications of conductor degradation including conductor strand breakage, excessive corrosion and swelling. Detailed climbing inspections of insulators, conductors and connections will be conducted prior to the period of extended operation. The frequency of subsequent climbing inspections will be based on the results of the initial inspection. Inspection results are summarized for consistent engineering criteria evaluation of degraded conditions such as insulator contamination and switchyard bus corrosion, or mechanical wear. Corrective actions will be based on the observed degradation and will be as specified in plant procedures. These are adequate inspection periods to detect aging effects before a loss of component intended function since experience has shown that aging degradation is a slow

process. The first inspection for license renewal is to be completed prior to the period of extended operation. These frequencies will provide multiple data points during a 20-year period, which can be used to characterize the degradation rate.

Monitoring and Trending - Element 5

Monitoring of high voltage insulators, conductors, and supports for contamination, corrosion and wear or switchyard buses for corrosion and degraded connections can aid in establishing rates of degradation to ensure corrective actions prior to loss of intended function.

Visual inspection techniques and infrared thermography inspection on an annual frequency are appropriate based on industry experience. The trending of results from inspection to inspection will provide a basis for timely corrective action prior to loss of intended function.

Infrared thermography inspection of connections provides the capability to identify increased resistance and loss of preload in the connection. Early identification provides for timely corrective actions prior to loss of function.

Enhancements

Prior to the period of extended operation plant procedures will be enhanced to include gathering and reviewing completed maintenance and inspection results, by the plant staff, to identify adverse trends.

Acceptance Criteria - Element 6

Visual inspections for contamination of insulators and corrosion of switchyard bus and transmission conductors will result in consistent qualitative criteria for identifying, over time, any degradation due to aging. Corrective actions will be based on the observed degradation and will be as specified in plant procedures. The results of the inspections will be documented providing the ability to predict extent of future degradation.

Connection increased resistance, detected by infrared thermography inspection, could be evidence of connector corrosion, degradation, or loss of preload. Acceptance criteria will be based on temperature rise above a reference temperature. The reference temperature will be ambient temperature or a baseline temperature based on data from the same type of connection being tested.

Cracking of bus welds or broken cable strands will be evaluated by engineering. The evaluation will consider the extent of the condition, reportability of the event, potential root causes, probability of recurrence, and corrective actions required.

Corrective Actions - Element 7

An engineering evaluation of the results of the inspections will be conducted as specified in plant procedures when evidence of aging as described above is found. The evaluation considers the extent of condition, reportability of the event, potential root causes, the probability of recurrence, and the corrective action required. Comparison to previous inspection results for contamination, corrosion, and wear will aid in identifying degradation. Corrective actions will be performed in accordance with plant procedures and may include, but are not limited to increased inspection/hot wash frequency, replacement or repair. When an unacceptable condition or situation is identified, a determination is made as to whether the same condition or situation is applicable to other in-scope switchyard or transmission components.

DCPP site QA procedures, review and approval process, and administrative controls are implemented in accordance with the requirements of 10 CFR 50 Appendix B and are acceptable in addressing corrective actions. The QA program includes elements of corrective action, confirmation process and administrative controls and is applicable to the safety-related and non-safety related systems, structures and components (SSCs) that are subject to aging management review.

Enhancements

Prior to the period of extended operation plant procedures will be enhanced to identify that an engineering evaluation will be conducted when a degraded condition is detected that considers the extent of the condition, reportability of the event, potential root causes, probably of recurrence, and the corrective actions required.

Confirmation Process - Element 8

DCPP site QA procedures, review and approval process, and administrative controls are implemented in accordance with the requirements of 10 CFR 50 Appendix B and are acceptable in addressing confirmation process. The QA program includes elements of corrective action, confirmation process and administrative controls and is applicable to the safety-related and non-safety related systems, structures and components (SSCs) that are subject to aging management review.

Administrative Controls - Element 9

DCPP site QA procedures, review and approval process, and administrative controls are implemented in accordance with the requirements of 10 CFR 50 Appendix B and are acceptable in addressing administrative controls. The QA program includes elements of corrective action, confirmation process and administrative controls and is applicable to the safety-related and nonsafety-related systems, structures and components (SSCs) that are subject to aging management review.

Operating Experience - Element 10

Industry operating experience illustrates the potential for loss of insulator quality due to salt deposits on switchyard insulators. Demonstration that this aging management program will be effective is achieved through objective evidence that shows the aging effect of degradation of insulation quality caused by the presence of salt deposits is being adequately managed. The following examples of operating experience provide objective evidence that the Transmission Conductor, Connections, Insulators and Switchyard Bus and Connections aging management program will be effective in assuring that the intended function of high voltage insulators will be maintained consistent with the current licensing basis for the period of extended operation.

In March 1993, (IN 93-95) Crystal River Unit 3 experienced a loss of the 230 kV switchyard (normal offsite power to safety-related buses) when a light rain caused arcing across salt-laden 230 kV insulators and opened switchyard breakers. In March 1993, Brunswick (LR SER) Unit 2 switchyard experienced a flashover of some high-voltage insulators attributed to a winter storm. Since 1982, Pilgrim (LR SER) experienced several losses of offsite power when ocean storms deposited salt on the 345 kV switchyard, causing the insulator to arc to ground.

Infrared thermography inspections are performed regularly on switchyard components to detect connections indicating increased resistance. These inspections have occasionally detected thermal anomalies at connections resulting in activities to correct the condition prior to failure of the connection or loss of function. Continuation of annual infrared thermography inspections of connections during the period of extended operation through the Transmission Conductor, Connections, Insulators and Switchyard Bus and Connections aging management program will assure the intended functions will be maintained consistent with the current licensing basis for the period of extended operation.

Diablo Canyon is a coastal plant subject to frequent and persistent wind, which produces salt spray that can result in insulator contamination. Instances of corrosion resulting from the exposure of base metal on galvanized components have been

observed. During the replacement of 500 kV insulators, it was noted that an insulator had degraded. Although corrosion was the prominent and evident degradation, some mechanical wear in the zinc galvanized coating would likely have preceded the degradation in order to expose the base metal. In May of 2007, DCPP experienced a loss of off site power, which was attributed to an insulator failure in the DCPP-Morro Bay 230 kV transmission line, which is not in the scope of license renewal. While implementing corrective actions, to replace similar insulators, transmission line maintenance personnel noted excessive wear on insulator and conductor support hardware. The degraded hardware was replaced with the installation of new insulators.

The transmission lines from the plant to the switchyard traverse mountainous terrain, which exposes them to persistent, and frequent high wind conditions. The plant schedules and, if necessary, conducts hot washes of the 500 kV high voltage insulators on a six-week frequency and ground or overhead infrared thermography inspections of the 230 and 500 kV insulators at least annually. Operating history has shown this process is effective in managing contamination.

Industry experience indicates failures of switchyard bus or transmission conductors are rare. The Transmission Conductor, Connections, Insulators and Switchyard Bus and Connections aging management program will assure that the results of the inspections receive an evaluation for aging to ensure the intended functions will be maintained consistent with the current licensing basis for the period of extended operation.

Conclusion

The continued implementation of the Transmission Conductor, Connections, Insulators and Switchyard Bus and Connections aging management program provides reasonable assurance that aging effects will be adequately managed such that the systems and components within the scope of license renewal will continue to perform their intended functions consistent with the current licensing basis during the period of extended operation.

B2.1.39 Thermal Aging Embrittlement of Cast Austenitic Stainless Steel (CASS)

Program Description

The Thermal Aging Embrittlement of Cast Austenitic Stainless Steel (CASS) program manages embrittlement of susceptible CASS components due to thermal aging. The program will be used to determine the susceptibility of CASS components to thermal aging embrittlement based on casting method, molybdenum content, and percent ferrite. The Thermal Aging Embrittlement of CASS program does not prevent degradation due to aging effects but provides measures for monitoring to detect the degradation prior to loss of intended function. For "potentially susceptible" components, aging management is accomplished through an enhanced volumetric examination that will be demonstrated to be adequate for CASS inspection in accordance with criteria identified in ASME Section XI, Appendix VIII, or a component-specific flaw tolerance evaluation. Additional inspection or evaluations to demonstrate that the material has adequate fracture toughness will not be required for components that have been determined to be not susceptible to thermal aging embrittlement. Flaws detected in examinations must be dispositioned in accordance with the acceptance criteria of ASME Section XI. If a detected flaw size does not meet the acceptance criteria following a flaw evaluation, repair and replacement activities on the pressure retaining (Code) boundary of components are conducted in accordance with ASME Section XI, IWA-4000.

The Thermal Aging Embrittlement of Cast Austenitic Stainless Steel (CASS) program is a new program and will be implemented as part of the Section XI ISI program. Plant procedures will be revised to perform enhanced ISI examinations demonstrated to be adequate for CASS inspection in accordance with criteria specified in ASME Section XI, Appendix VIII or with a component-specific flaw tolerance evaluation according to EPRI-106092, Appendix B guidelines. The required inspections will be completed within the 10-year period prior to the period of extended operation.

NUREG-1801 Consistency

The Thermal Aging Embrittlement of Cast Austenitic Stainless Steel (CASS) program is a new program that, when implemented, will be consistent with NUREG-1801, Section XI.M12, Thermal Aging Embrittlement of Cast Austenitic Stainless Steel (CASS).

Exceptions to NUREG-1801

None

Enhancements

None

Operating Experience

The Thermal Aging Embrittlement of Cast Austenitic Stainless Steel (CASS) program is a new program; therefore, plant-specific operating experience to verify the effectiveness of the program is not available. Industry operating experience that forms the basis for this program is included in the operating experience element of the corresponding NUREG-1801, aging management program description. The DCPP operating experience findings for this program identified no unique plant specific operating experience; therefore DCPP operating experience is consistent with NUREG-1801. The operating experience review did not identify any thermal aging embrittlement in the DCPP reactor coolant system.

As additional industry and applicable plant-specific operating experience become available, the operating experience will be evaluated and appropriately incorporated into the program through the DCPP Corrective Action Program and Operating Experience Program. This ongoing review of operating experience will continue throughout the period of extended operation, and the results will be maintained on site. This process will confirm the effectiveness of this new license renewal aging management program by incorporating applicable operating experience and performing self assessments of the program.

Conclusion

The implementation of the Thermal Aging Embrittlement of Cast Austenitic Stainless Steel (CASS) program will provide reasonable assurance that aging effects will be managed such that the systems and components within the scope of this program will continue to perform their intended functions consistent with the current licensing basis for the period of extended operation.

B3 TLAA SUPPORT ACTIVITIES

B3.1 METAL FATIGUE OF REACTOR COOLANT PRESSURE BOUNDARY

Program Description

The Metal Fatigue of Reactor Coolant Pressure Boundary program manages fatigue cracking caused by anticipated cyclic strains in metal components of the RCPB. The program will ensure that actual plant experience remains bounded by the numbers of transients assumed in the design calculations, or that appropriate corrective measures maintain the design and licensing basis by other acceptable means. The plant operating procedures and technical specifications ensure that the severity of plant events is bounded by the transients in the design analyses.

The existing DCPP Metal Fatigue of Reactor Coolant Pressure Boundary program monitors and trends plant transients that contribute significantly to the fatigue usage for each of the monitored components included in the program scope. The existing program will be enhanced to include additional transients necessary to ensure accurate calculations of fatigue for those additional components identified by the evaluation of ASME Section III fatigue analyses and for the NUREG/CR-6260 components for an older-vintage Westinghouse Plant.

The enhanced DCPP Metal Fatigue of Reactor Coolant Pressure Boundary program will use two methods in the FatiguePro® software to monitor transient cycles and fatigue usage:

1) The Global method includes automated cycle counting of transient event cycles affecting the components; supported as needed by manual data entry for infrequent events to ensure that the numbers of transient events assumed by the design basis calculations are not exceeded.

2) The Cycle-Based Fatigue (CBF) management method includes (a) automated cycle counting; supported as needed by manual data entry for infrequent events, and (b) periodic cumulative fatigue usage calculation based on the counted cycles.

The DCPP Metal Fatigue of Reactor Coolant Pressure Boundary program continuously monitors plant data, and maintains a record of the data collected. The collected plant data are analyzed to identify operational transients and events, calculate usage factors for selected monitored components, and compare the calculated usage factors to allowable limits. Periodic review of these calculations

ensures that usage factors will not exceed the allowable value of 1.0 without an appropriate evaluation and any further necessary actions. If a cycle count or cumulative fatigue usage value increases to an action limit, corrective actions will be initiated to evaluate the design limits and determine appropriate specific corrective actions. Action limits permit completion of corrective actions before the design basis number of events is exceeded.

NUREG-1801 Consistency

The Metal Fatigue of Reactor Coolant Pressure Boundary program is an existing program that, following enhancement, will be consistent with NUREG-1801, Section X.M1, Metal Fatigue of Reactor Coolant Pressure Boundary.

Exceptions to NUREG-1801

None

Enhancements

Prior to the period of extended operation, the following enhancements will be implemented in the following program elements:

Scope of Program – Element 1, Preventive Actions – Element 2, and Monitoring and Trending – Element 5

The scope of locations monitored by the DCPP Metal Fatigue of Reactor Coolant Pressure Boundary program will be enhanced to include additional locations which are not covered by the current Metal Fatigue of Reactor Coolant Pressure Boundary program. Additional locations will include the NUREG/CR-6260 locations for the effects of the reactor coolant environment on fatigue. Usage factors in the NUREG/CR-6260 sample locations will include the environmental factors, F(en), calculated by NUREG/CR-6583 and NUREG/CR-5704 or appropriate alternative methods.

Scope of Program – Element 1 and Parameters Monitored or Inspected – Element 3

The scope of transients monitored by the DCPP Metal Fatigue of Reactor Coolant Pressure Boundary program will be enhanced to include additional transients that contribute to fatigue usage, which are not covered by the current Metal Fatigue of Reactor Coolant Pressure Boundary program. Usage factors in the NUREG/CR-6260 sample locations will include the environmental factors, F(en), calculated by NUREG/CR-6583 and NUREG/CR-5704 or appropriate alternative methods.

Preventive Actions – Element 2 and Acceptance Criteria – Element 6

The procedures governing the DCPP Metal Fatigue of Reactor Coolant Pressure Boundary program will be enhanced to include additional cycle count and fatigue usage action limits, which will invoke appropriate corrective actions if a component approaches a cycle count action limit or a fatigue usage action limit. Action limits permit completion of corrective actions before the design limits are exceeded.

Cycle Count Action Limits:

An action limit initiates corrective action when the cycle count for any of the critical thermal or pressure transients is projected to reach the action limit defined in the program before the end of the next fuel cycle. In order to assure sufficient margin to accommodate occurrence of a low probability transient, corrective actions must be initiated before the remaining number of allowable cycles for any specified transient becomes less than one.

Cumulative Fatigue Usage (CUF) Action Limits:

An action limit requires corrective action when calculated cumulative usage factor (CUF) for any monitored location is projected to reach 1.0 within the next three fuel cycles.

Detection of Aging Effects – Element 4

The procedures governing the DCPP Metal Fatigue of Reactor Coolant Pressure Boundary program will be enhanced to specify the frequency of periodic reviews of the results of the monitored cycle count and cumulative usage factor data at least once per fuel cycle. This review will compare the results against the corrective action limits to determine any approach to action limits and any necessary revisions to the fatigue analyses will be included in the corrective actions.

Corrective Actions – Element 7

The procedures governing the DCPP Metal Fatigue of Reactor Coolant Pressure Boundary program will be enhanced to include appropriate corrective actions to be invoked if a component approaches a cycle count action limit or a fatigue usage action limit. The corrective action options for a component that has exceeded action limits include a revised fatigue analysis or repair or replacement of the component.

Operating Experience

The methods of the FatiguePro® software, used by the DCPP Metal Fatigue of Reactor Coolant Pressure Boundary program, were developed by EPRI for the

industry, in response to NRC concerns that early-life operating cycles at some units had caused fatigue usage factors to accumulate faster than anticipated in the design analyses. This Metal Fatigue of Reactor Coolant Pressure Boundary program was therefore designed to ensure that the code limit will not be exceeded in the remainder of the licensed life. The industry operating experience program reviews industry experience, including experience that may affect fatigue management, to ensure that applicable experience is evaluated and incorporated in plant analyses and procedures. Any necessary evaluations are conducted under the plant corrective action program.

The DCPP Metal Fatigue of Reactor Coolant Pressure Boundary program was implemented in response to industry experience that indicated that the design basis set of transients used for fatigue analyses of the reactor coolant pressure boundary did not include some significant transients, and therefore might not be limiting for components affected by them.

PG&E completed weld overlays of the Unit 2 welds attaching the surge, spray, and relief valve nozzles to the safe ends and connecting piping during the Unit 2 Refueling Outage 14 (2R14, Spring 2008) to mitigate the effects of primary water stress corrosion cracking (PWSCC) in the original Alloy 82/182 welds. The fatigue analyses of these Unit 2 subcomponents were revised accordingly. The overlays were also supported by fatigue crack growth analyses. Unit 1 welds attaching the surge, spray, and relief valve nozzles to the safe ends and connecting piping are composed of stainless steel and thus, are not susceptible to primary water stress corrosion cracking.

In response to NRC Bulletin 88-11, Westinghouse performed a plant-specific evaluation of DCPP pressurizer surge lines. It was concluded that thermal stratification does not affect the integrity of the pressurizer surge lines. Additionally, PG&E conducted inspections, analyses, and procedural revisions to ensure that thermal stratification does not affect the integrity of the pressurizer surge lines.

In 1988, as identified in NRC Bulletin 88-08, there were several instances of thermal fatigue cracking in normally stagnant lines attached to reactor coolant system (RCS) piping. In response, PG&E completed a review of systems connected to the RCS. The review concluded that the potential for the described thermal conditions exists only on the four boron injection tank (BIT) cold leg safety injection lines. A subsequent design change of the BIT Bypass Line included two bypass valves with a pressure indicator (PI) between them. Periodic walkdown checks of the PI monitor for leakage of the upstream isolation valve are performed to minimize the possibility of charging flow leakage to RCS.

The DCPP operating experience findings for this program identified no unique plant specific operating experience; therefore DCPP operating experience is consistent with NUREG-1801.

Conclusion

The continued implementation of the Metal Fatigue of Reactor Coolant Pressure Boundary program provides reasonable assurance that aging effects will be managed such that the systems and components within the scope of this program will continue to perform their intended functions consistent with the current licensing basis for the period of extended operation.

B3.2 ENVIRONMENTAL QUALIFICATION (EQ) OF ELECTRICAL COMPONENTS

Program Description

The Environmental Qualification (EQ) of Electrical Components program manages component thermal, radiation, and cyclical aging through the use of aging evaluations based on 10 CFR 50.49(f) qualification methods. As required by 10 CFR 50.49, EQ components not qualified for the current license term are to be refurbished or replaced, or have their qualification extended prior to reaching the aging limits established in the evaluation. The Environmental Qualification (EQ) of Electrical Components Program complies with the requirements of 10 CFR 50.49 and NUREG-0588, *Interim Staff Position on Environmental Qualification of Safety-Related Electrical Equipment*. The Environmental Qualification (EQ) of Electrical Components Program is not committed to Regulatory Guide 1.89, *Environmental Qualification of Certain Electric Equipment Important to Safety for Nuclear Power Plants*, Revision 1. New (i.e., non-replacement) equipment that is required to be qualified, and that was installed after February 22, 1983, is required to be qualified to the level of IEEE 323-1974 and NUREG-0588 Category I. Although there are no DCPP regulatory commitments to do so, supplemental guidance of RG 1.89 Revision 1 is considered for qualification of new and replacement equipment installed since the promulgation of the Guide where there are no "sound reasons" (pursuant to 10 CFR 50.49(l)) for not upgrading the qualification of such equipment.

The EQ program includes determination of qualified life, and maintains a controlled schedule for replacement, refurbishment, or re-qualification actions that depend on the established life of each component controlled by the program. Qualified components are identified and maintained within the controlled plant information database. Service requirements and environments for qualified components are identified in dedicated EQ files, which are segregated on a discipline basis and according to manufacturer. Changes to the EQ component database and EQ files are procedurally controlled.

The EQ program does not prevent aging effects, but includes actions that prevent failures due to aging effects. The program establishes the component aging limits, service conditions, and their tolerances; such as qualified life and the limiting environmental or service conditions upon which the qualified life depends. The EQ program establishes specific installation requirements, inspection, periodic maintenance actions, and maintains a temperature monitoring program to maintain component aging effects within the bounds of the qualification basis.

The important attributes of a reanalysis include analytical methods, data collection and reduction methods, underlying assumptions, acceptance criteria, and corrective actions (if acceptance criteria are not met). These attributes are discussed below.

Analytical Methods:

Reanalysis may refine previously-conservative methods or conservative environmental condition assumptions; may invoke local environmental data collected for that purpose; and may change underlying assumptions, acceptance criteria, and corrective actions (if acceptance criteria are not met). Thermal aging evaluations are based on Arrhenius methodology. Analytical models used in the reanalysis of an aging evaluation are the same as those previously applied during the prior evaluation. Radiation aging evaluations demonstrate qualification for the total integrated dose, which comprises the projected installed life radiation dose plus accident radiation dose. Normal integrated dose can be calculated by multiplying the 40 year exposure by 1.5 and then adding the accident radiation dose. Vibration aging and other cyclic effects may require reevaluation.

Data Collection and Reduction Methods:

The EQ program employs surveillance and maintenance activities when required by the qualification evaluation for an individual component. A temperature monitoring program is maintained to provide actual localized temperature information to validate assumptions and extend or reduce qualified life. The EQ program also monitors certain equipment parameters through a condition monitoring program to ensure that the components are within the bounds of their qualification basis. Reanalysis may invoke local environmental data for the purpose of extending qualified life. Any changes to material activation energy values as part of a reanalysis will be justified.

Underlying Assumptions:

EQ component aging evaluations contain sufficient conservatism to account for most environmental changes occurring due to plant modifications and events. When unexpected adverse conditions are identified during operational or maintenance activities that affect the normal operating environment of a qualified component, the affected EQ component is evaluated and appropriate corrective actions are taken, which may include changes to the qualification bases and conclusions. The reanalysis of an aging evaluation is documented according to the station's quality assurance program, which requires the verification of assumptions and conclusions.

Acceptance Criteria and Corrective Actions:

If the qualification cannot be extended by reanalysis, the component will be refurbished, replaced, or requalified to maintain qualification for the period of extended operation. A reanalysis is to be performed in a timely manner (that is, sufficient time is available to refurbish, replace, or requalify the component if reanalysis is unsuccessful). Component replacement prior to or at the end of its qualified life is performed in accordance with established component replacement schedules. When monitoring is used to extend or confirm a component qualified life, plant-specific acceptance criteria are established based on applicable 10 CFR 50.49(f) qualification methods.

The EQ program implements corrective actions for components found to be outside the bounds of their qualification bases. These may include changes to the EQ files, such as reanalysis of the component qualified life and refurbishment or replacement schedule changes. When an EQ deficiency or degraded condition is identified, a corrective action document is initiated to document the condition. When an emerging industry aging issue is identified that affects the qualification status of an EQ equipment or device installed at the plant, the affected component is evaluated and appropriate corrective actions are taken. Changes to the equipment qualification evaluations are documented in the EQ file applicable to the affected component. Issues addressing equipment qualification are reconciled in EQ file sections that specifically document thermal, radiation and cyclic qualified lives.

NUREG-1801 Consistency

The Environmental Qualification (EQ) of Electrical Components program is an existing program that is consistent with NUREG-1801, Section X.E1, Environmental Qualification (EQ) of Electrical Components.

Exceptions to NUREG-1801

None

Enhancements

None

Operating Experience

The DCPP EQ program complies with 10 CFR 50.49, and includes consideration of operating experience for determining qualification bases and conclusions, including qualified life.

On a continuing basis, the DCPP EQ Program has ensured that the design and installation of EQ harsh environment equipment meets site-specific EQ requirements. These EQ requirements, in turn, provide reasonable assurance that the equipment will operate/function properly for the time period relied upon to prevent the occurrence of, or mitigate the effects of, an accident or plant transient.

As stated in NUREG-1801, Section X.E1, *Environmental Qualification (EQ) of Electric Components*, EQ programs include consideration of operating experience to modify qualification bases and conclusions, including qualified life. Compliance with 10 CFR 50.49 provides reasonable assurance that components can perform their intended functions during accident conditions after experiencing the effects of in-service aging. Review of operating experience has demonstrated that the DCPP EQ Program includes consideration of operating experience to modify qualification bases and conclusions and is in compliance with 10 CFR 50.49.

When an emerging industry aging issue is identified that affects the qualification status of an EQ equipment or device installed at the plant, the affected component is evaluated and appropriate corrective actions are taken. Changes to the equipment qualification evaluations are documented in the EQ file applicable to the affected component. Issues addressing equipment qualification are reconciled in EQ file sections that specifically document thermal, radiation, and cyclic qualified lives.

The following are examples that demonstrate that the EQ program operating experience information provides objective evidence to support the conclusion that the effects of aging will be managed adequately so that the intended functions will be maintained during the period of extended operation:

In 2002, a Unit 2 manual reactor trip occurred due to inadvertent feedwater isolation to the steam generator. A blown fuse on a solenoid operated valve (SOV) power supply resulted in failure of the SOV power supply lead insulation due to thermal aging degradation. The EQ calculation was revised, other EQ calculations were reviewed for adequacy, and preventive maintenance frequencies were reevaluated.

In 2003, during review of EQ files it was identified that the thermal aging analysis for the containment fan cooling unit motor cables was not conservative. Corrective actions included revising the qualified life of the cables from 40 years to 24.3 years and reviewing other EQ files for similar issues.

The DCPP operating experience findings for this program identified no unique plant specific operating experience; therefore DCPP operating experience is consistent with NUREG-1801.

Conclusion

The continued implementation of the Environmental Qualification (EQ) of Electrical Components program provides reasonable assurance that aging will be managed such that the systems and components within the scope of this program will continue to perform their intended functions consistent with the current licensing basis for the period of extended operation.

APPENDIX C

(NOT USED)

APPENDIX D

TECHNICAL SPECIFICATION CHANGES

(Not Used)