TRICONEX

Tricon Version 9-10 Systems

Field Terminations Guide

for Tricon v9-v10 Systems

Assembly No. 9700052-018

INVENSYS PROCESS SYSTEMS

February 2009

Information in this document is subject to change without notice. Companies, names and data used in examples herein are fictitious unless otherwise noted. No part of this document may be reproduced or transmitted in any form or by any means, electronic or mechanical, for any purpose, without the express written permission of Invensys Systems, Inc.

© 2006–2009 by Invensys Systems, Inc. All rights reserved.

Triconex, Tricon, Trident, TriStation 1131, TriStation MSW, and CEMPLE are trademarks of Invensys plc, its subsidiaries and affiliates. All other brands may be trademarks of their respective owners.

Document No. 9720052-018

Printed in the United States of America.

Contents

Preface ix

Summary of Sections . . . ix
Related Documents . . . x
Product and Training Information . . . x
Technical Support . . . x
We Welcome Your Comments . . . xi

Chapter 1 Introduction to Field Terminations 1

Overview . . . 2
External Termination Panels . . . 3
- Basic Termination Panels . . . 4
- RG 1.180 Termination Panels . . . 4
- Hazardous Location (Nonincendive) Termination Panels . . . 4
- Termination Panels with Interposing Relays . . . 5
- Bypass Panel for Digital Inputs . . . 5
- Termination Panel with RTD/TC/AI Input Signal Conditioning . . . 6
- Termination Panel 9251-210 for Digital Output Module 3603B . . . 6
- Termination Panel 9863-710 for Analog Output Module 3806E . . . 6

Cables . . . 7
- Interface Cables . . . 7
- Fanned-Out Cables . . . 7
- Special Cables (Relay Loopback) . . . 7

Chapter 2 Field Termination Options and Installation 9

Overview . . . 10
Determining Field Termination Options by Module Part Number . . . 10
Determining Field Termination Options by Module Type . . . 14
- Digital Input Modules . . . 14
- Pulse Input Modules . . . 15
- Pulse Totalizer Input Modules . . . 16
- Digital Output Modules . . . 16
- Supervised Digital Output Modules . . . 17
- Supervised/Non-Supervised Digital Output Modules . . . 17
- Dual Digital Output Modules . . . 18
- Relay Output Modules . . . 18
- Analog Input Modules . . . 19
- Thermocouple Input Modules . . . 21

Analog Output Modules 22
HART Interface Modules 23
Installation and Removal 24
Installing a Termination Panel. 24
Removing or Replacing a Termination Panel 30
Installing a Fanned-Out Cable. 31
Removing or Replacing a Fanned-Out Cable 31

Chapter 3 Digital Input Termination Panels 33

Overview 34
16-Point Commoned Digital Input Term Panels 35
9561-810 (115 V, commoned, 16 pts.) 36
9562-810 (48 V, commoned, 16 pts.) 38
9563-810 (24 V, commoned, 16 pts.) 41
9563-910 (24 V, commoned, resistor protected, 16 pts.). 43
32-Point Commoned Digital Input Term Panels 46
9565-810 (48 VDC, commoned, 32 pts.) 47
9566-710 (24 VDC, commoned, 32 pts.) 49
9566-810 (24 VDC, commoned, 32 pts.) 51
16-Point Non-Commoned Digital Input Term Panels. 54
9561-110 (115 V, non-commoned, 16 pts.) 54
Basic Digital Input Term Panels 57
9551-110 (115 V, basic, 16 pts.). 57
9552-610 (48 V, basic, 16 pts.). 59
9553-610 (24 V, basic, 16/32 pts.). 61
9750-310 (24 VDC, basic, 32 pts.). 65
9750-410 (48 VDC, basic, 32 pts.). 67
Pulse Input and Pulse Totalizer Input Term Panels. 70
9753-110 (8 PI pts./16 PTI pts.) 70
Bypass Term Panels 75
BP9228-010 (24 V, bypass, 32 pts., for 32 pt. modules). 76
BP9229-010 (24 V, bypass, 32 pts., for 64 pt. modules). 78

Chapter 4 Digital Output Termination Panels 81

Overview 82
8-Point Commoned Digital Output Term Panels. 83
9661-510 (115 VAC, commoned, 8 pts.) 84
9661-810 (120 VDC, commoned, 8 pts.) 86
9662-710 (24 VDC low-power, commoned, 8 pts.) 89
9662-910 (24 VDC, commoned, 8 pts.) 92
9667-910 (48 VDC, commoned, 8 pts.) 95
16-Point Commoned Digital Output Term Panels. 99
9661-610 (115 VAC, commoned, 16 pts.) 100
9661-910 (120 VDC, commoned, 16 pts.) 102

9662-610 (24 VDC, commoned, 16 pts.) 106
9662-810 (24 VDC, commoned, 16 pts.) 110
9663-610 (115 VAC, commoned, 16 pts.) 112
9664-810 (120 VDC, commoned, 16 pts.) 114
9667-810 (48 VDC, commoned, 16 pts.) 118
16-Point Non-Commoned Digital Output Term Panels 121
9251-210 (120 VDC, non-commoned, 16 pts., 3603B module) 122
9661-110 (115 VAC, non-commoned, 16 pts.) 124
9662-110 (24 VDC, non-commoned, 16 pts.) 126
9664-110 (115 VAC, non-commoned, 16 pts.) 128
9667-110 (48 VDC, non-commoned, 16 pts.) 130
9668-110 (non-commoned relay output, 16 pts.) 132
Basic Digital Output Term Panels 135
9651-110 (basic digital/relay output, 16 pts.) 135
9652-610 (48 VDC, basic, 16 pts.) 141
9653-610 (24 VDC, basic, 16 pts.) 143
Commoned Interposing Relay Term Panels 150
9670-610 (115 VAC, commoned interposing relay, 16 pts.) 150
9671-810 (24 VDC, commoned interposing relay, 16 pts.) 153
9672-810 (48 VDC, commoned interposing relay, 16 pts.) 157
9673-810 (120 VDC, commoned interposing relay, 16 pts.) 160
Non-Commoned Interposing Relay Term Panels 164
9670-110 (115 VAC, non-commoned interposing relay, 16 pts.) 164

Chapter 5 Analog Input and Analog Output Termination Panels 169

Overview 170
16-Point Current Input Term Panels 171
9761-210 (current input, 0–5 VDC, 16 pts.) 172
9761-410 (current input, 0–10 VDC, 16 pts.) 175
9762-210 (current input, 0–5 VDC, 16 pts.) 178
9762-410 (current input, 0–10 VDC, 16 pts.) 180
9771-210 (current input, 0–5 VDC, user configurable, 16 pts.) 183
32-Point Current Input Term Panels 188
9750-210 (current input, 0–5 VDC, basic, 32 pts.) 189
9760-210 (current input, 0–5 VDC, 32 pts.) 191
9760-410 (current input, 0–10 VDC, 32 pts.) 193
9765-210 (3-wire current input, 0–5 VDC, 32 pts.) 195
Thermocouple Input Term Panels 199
9765-610 (TC input, upscale/downscale, 16 pts.) 199
9766-210 (TC input, upscale, 16 pts.) 201
9766-510 (TC input, downscale, 16 pts.) 204
Voltage Input Term Panels 208
9750-810 (0–5 VDC/0–10 VDC voltage input, basic, 32 pts.) 209
9753-110 (0–5 VDC/0–10 VDC voltage input, basic, 16 pts.) 211

9763-810 (0–5 VDC/0–10 VDC voltage input, 16 pts.) . . . 214
RTD/TC/AI Input Term Panels . . . 218
9764-310 (RTD/TC/AI input, 0–5 VDC, 16 pts.) . . . 218
Analog Output Term Panels . . . 229
9863-710 (3806E module, 8 pts.) . . . 230
9853-610 (current output, basic, 8 pts.) . . . 236
9871-810 (3807 module, 4 pts.) . . . 240

Chapter 6 Hazardous Location (Nonincendive) Termination Panels 243
Overview . . . 244
Field Wiring in Hazardous Locations . . . 245
Cable and Load Parameters (Entity Parameters) . . . 245
Electrical Code Approval . . . 245
Analog Input Term Panels . . . 246
9791-610 (4-20 mA, 0–5 VDC, 16 pts.) . . . 246
9787-110 (0-5 VDC voltage input, 16 pts.) . . . 251
9785-610 (TC input, downscale, 16 pts.) . . . 255
9784-610 (TC input, upscale, 16 pts.) . . . 258
9786-110 (TC input, upscale/downscale, 16 pts.) . . . 262
9789-610 (4-20 mA, high-density, 32 pts.) . . . 264
Analog Output Term Panels . . . 268
9861-610 (3805E/H module, 8 pts.) . . . 268
9871-810 (3807 module, 4 pts.) . . . 271
Digital Input Term Panels . . . 275
9572-610 (24 VDC, commoned, 16 pts.) . . . 275
9570-610 (24 VDC, high-density, 32 pts.) . . . 280
9571-610 (24 VDC, fail-safe, 32 pts.) . . . 283
Digital Output Term Panels . . . 286
9671-610 (24 VDC, commoned, supervised, 16 pts.) . . . 286
Pulse Input Term Panels . . . 292
9793-110 (pulse input, 8 pts.) . . . 292

Chapter 7 RG 1.180 Termination Panels 295
Overview . . . 296
Analog Input Term Panels . . . 297
9790-610 (4-20 mA, 0–5 VDC, 16 pts.) . . . 297
9795-610 (4-20 mA, 0–5 VDC, 16 pts.) . . . 302
9792-610 (4-20 mA, 0-5 VDC, 16 pts., user-configurable, 48 VDC field) . . . 306
9783-110 (0-5 VDC voltage input, 16 pts.) . . . 311
9782-110 (TC input, upscale/downscale, 16 pts.) . . . 315
Analog Output Term Panels . . . 319
9860-610 (3805E/H module, 8 pts.) . . . 319
Pulse Input Term Panels . . . 323
9794-110 (pulse input, 8 pts.) . . . 323

RTD/TC/AI Input Term Panels 326

Chapter 8 Fanned-Out Cables 327

Overview 328
Description of Fanned-Out Cables (9101-010). 328
Fanned-Out Cables with Digital Input Modules 329
Connecting 32-Point Digital Input Modules to Fanned-Out Cables 329
Connecting 64-Point Digital Input Modules to Fanned-Out Cables 333
Fanned-Out Cables with Digital Output Modules. 335
Connecting 16-Point Digital Output Modules to Fanned-Out Cables. 335
Connecting 32-Point Digital Output Modules to Fanned-Out Cables. 341
Connecting 32-Point Relay Output Modules to Fanned-Out Cables. 344

Appendix A Re-Keying Connectors 347

Re-Configuring a System 348
I/O Connector Key Positions. 349
Re-Keying a Connector. 353
Re-Keying a Fanned-Out Cable. 354

Appendix B Fanned-Out Cable Pinouts 355

Signal Names 356
Connector #1 357
Connector #2 359

Appendix C Recommended Replacement Parts 361

Appendix D Panel Dimensions 365

Appendix E Shield Ground 369

Appendix F Panel Labels 371

Overview 372
16-Point Non-Commoned DI/DO/RO Panels 373
16-Point Non-Commoned AI/TI Panels 374
16-Point Commoned AI/DI/DO Panels 375
32-Point Commoned AI/DI Panels. 376
16-Point Commoned AI ATEX/RG 1.180 Panels 377
16-Point RTD/TC/AI Panels. 378

Appendix G Part Number Cross-Reference 379

Appendix H Minimum Bend Radiuses of Cables 383

Appendix I Low-Density Chassis I/O Module Compatibility 387

Overview 388

Module Upgrades 388
ETP Upgrades for Compatibility with I/O Modules 389
3700 and 3700A AI Module ETP Upgrade 390
3704E AI Module ETP Upgrade 391
3604E DO Module ETP Upgrade 392
3614E DO Module ETP Upgrade 394
3615E DO Module ETP Upgrade 396
3624 DO Module ETP Upgrade 398

Appendix J Using V8 ETAs with v9/v10 Systems 399

Appendix K Warning Labels 403
Overview 404
General Hazard 405
Hazardous Voltage 406
Hot Surface 407

Preface

This guide includes information on external termination products for Tricon v9 systems and Tricon v10 systems.

Summary of Sections

- Chapter 1, Introduction to Field Terminations—introduces the Triconex external field termination products for the Tricon system.
- Chapter 2, Field Termination Options and Installation—provides information for determining field termination options using I/O module part numbers or I/O module types, and describes how to install and remove termination panels and fanned-out cables.
- Chapter 3, Digital Input Termination Panels—describes external field termination panels that you can use with digital input modules.
- Chapter 4, Digital Output Termination Panels—describes external field termination panels that you can use with digital output modules.
- Chapter 5, Analog Input and Analog Output Termination Panels—describes external field termination panels that you can use with analog input modules and analog output modules.
- Chapter 6, Hazardous Location (Nonincendive) Termination Panels—describes external field termination panels that you can use in hazardous locations.
- Chapter 7, RG 1.180 Termination Panels—describes external termination panels that you can use in nuclear power plant EMI/RFI environments.
- Chapter 8, Fanned-Out Cables—describes fanned-out cables that you can use with digital I/O modules.
- Appendix A, Re-Keying Connectors—explains how to re-key connectors by module type and voltage to protect modules from inadvertent connection to inappropriate voltages.
- Appendix B, Fanned-Out Cable Pinouts—provides pin-out information for connecting fanned-out cables and basic termination panels.
- Appendix C, Recommended Replacement Parts—contains a list of recommended parts that can be used to replace existing Tricon parts, or customize a Tricon system.
- Appendix D, Panel Dimensions—specifies the physical dimensions of the different types of termination panels.
- Appendix E, Shield Ground—illustrates how to connect a shield to earth.
- Appendix F, Panel Labels—illustrates how to apply termination panel labels.

- Appendix G, Part Number Cross-Reference—identifies the ETA part number and cable part number for each termination panel model number.
- Appendix H, Minimum Bend Radiuses of Cables—identifies the minimum bend radiuses of cables.
- Appendix J, Using V8 ETAs with v9/v10 Systems—identifies version 8 "low-density" external termination assemblies (ETAs) that can be used with version 9 systems.
- Appendix K, Warning Labels—describes General Hazard, Hazardous Voltage, and Hot Surface warning labels.

Related Documents

- *Planning and Installation Guide for Tricon v9–v10 Systems*
- *Safety Considerations Guide for Tricon v9–v10 Systems*
- *TriStation 1131 Developer's Guide, v4.3*

Product and Training Information

To obtain information about Triconex products and in-house and on-site training, see the Triconex Web site or contact your regional Triconex support office.

Web Site

http://www.ips.invensys.com/en/triconex

Technical Support

Customers in the U.S. and Canada can obtain technical support from the IPS Global Client Support (GCS) center at the numbers below. International customers should contact their regional support center.

Requests for support are prioritized as follows:

- Emergency requests are given the highest priority
- Requests from participants in the System Watch Agreement (SWA) and customers with purchase order or charge card authorization are given next priority
- All other requests are handled on a time-available basis

If you require emergency or immediate response and are not an SWA participant, you may incur a charge. Please have a purchase order or credit card available for billing.

Telephone

Toll-free number	866-746-6477, or
Toll number	508-549-2424 (outside U.S.)

Fax

Toll number 508-549-4999

Web Site

http://support.ips.invensys.com (registration required)

E-mail

support@ips.invensys.com

We Welcome Your Comments

To help us improve future versions of Triconex documentation, we want to know about any corrections, clarifications, or further information you would find useful. When you contact us, please include the following information:

- The title and version of the guide you are referring to
- A brief description of the content you are referring to (for example, step-by-step instructions that are incorrect, information that requires clarification or more details, missing information that you would find helpful)
- Your suggestions for correcting or improving the documentation
- The version of the Triconex hardware or software you are using
- Your name, company name, job title, phone number and e-mail address

Send e-mail to us at:

triconextechpubs@ips.invensys.com

Please keep in mind that this e-mail address is only for documentation feedback. If you have a technical problem or question, please contact the IPS Global Client Support (GCS) center. See Technical Support on page x for contact information.

Or, you can write to us at:

Attn: Technical Publications
Triconex
15345 Barranca Parkway
Irvine, CA 92618

Thank you for your feedback.

1

Introduction to Field Terminations

Overview 2

External Termination Panels 3

Cables 7

Overview

This chapter introduces the Triconex external field termination products for the Tricon system.

All cables and termination panels are built to withstand harsh industrial environments. The environmental specifications for components used on these products are the same as for a Tricon chassis. For more information, see the *Planning and Installation Guide for Tricon v9–v10 Systems*.

External Termination Panels

An external termination panel (ETP) is an electrically-passive printed circuit board (PCB) to which field wiring is easily attached. A panel connector, terminal blocks, and optional components are mounted to the PCB and enclosed in a DIN-rail compatible plastic housing. A termination panel and associated cable pass input signals from the field directly to an input module, or pass output signals from an output module directly to field wiring. This arrangement permits the removal or replacement of I/O modules without disturbing field wiring.

Standard termination panels are best for remote marshaling of field wiring where maximum flexibility, high density and simple maintenance is desired. Standard termination panels allow you to marshal field signals in a separate enclosure up to 99 feet (30 meters) from a Tricon.

A standard termination panel consists of a PCB with all necessary components—such as two-piece terminal blocks, resistors, fuses and blown-fuse indicators—mounted on a DIN-rail compatible plastic housing. The housing snaps into mounting rails in accordance with DIN 50 22.

Compression terminals on the standard panel are designed for use with 24- to 12-gauge (0.3 mm^2 to 2.1 mm^2) wiring. Some panels have an optional current-limiting series resistor, others have a fuse with a blown-fuse indicator, to protect the field wiring and field device.

Standard termination panels are pre-configured for a specific application. For instance, *commoned* standard termination panels can be ordered with commoned power-and-return, or redundant DC power configurations with a diode-ORing. The thermocouple input termination panel provides cold-junction temperature sensors and can be ordered with upscale, downscale, or programmable burnout detection. A standard termination panel for analog voltage inputs provides commoned or non-commoned signal returns, while the current-mode version has a precision resistor at each input point to convert current to voltage.

Each standard termination panel is packaged with a matched interface cable that connects the panel to the backplane of a Tricon chassis. A female connector at one end of the cable is keyed to match the male connector on the Tricon backplane. A male connector on the other end of the cable attaches to the standard termination panel.

In addition to standard termination panels, there are other types of termination panels, including:

- Basic termination panels
- Hazardous location (nonincendive) termination panels
- RG 1.180 Termination Panels
- Termination panels with interposing relays
- Bypass panels for digital inputs
- Termination panels with RTD/TC/AI input signal conditioning
- Termination panels for 3603B digital output modules
- Termination panels for 3806E analog output modules

Basic Termination Panels

Basic termination panels are a low-cost means of connecting field wiring to a Tricon. Basic termination panels allow you to marshal field signals in a separate enclosure up to 99 feet (30 meters) from a Tricon chassis.

A basic termination panel consists of a PCB—with panel connector and terminal blocks—mounted on a DIN rail-compatible plastic housing. The housing snaps onto mounting rails in accordance with DIN 50 022. Current-to-voltage conversion resistors are also mounted on analog input panels configured for current input. You must provide any other components required for your application.

The panel connector and terminal blocks are directly interconnected via the PCB. The compression terminals on the terminal blocks are designed for use with 24- to 12-gauge (0.3 mm^2 to 2.1 mm^2) wiring.

Refer to Appendix B, Fanned-Out Cable Pinouts for signal labels and connector pin numbers. Each signal label indicates the corresponding screw terminal on the termination panel. The panel connector's pin numbers match those on the Tricon backplane's connector.

A basic termination panel is packaged with a cable that connects between a Tricon chassis backplane and the basic termination panel. A female connector on one end of the cable is keyed to match the male connector on the Tricon backplane. A male connector on the opposite end of the cable is keyed to match the male connector on the termination panel.

Basic termination panels are available in these configurations:

- Digital input panels
- Digital output panels
- Relay output panels
- Analog input panels
- Analog output panels
- Pulse input panels
- Pulse totalizer input panels

RG 1.180 Termination Panels

RG 1.180 termination panels are suitable for use in applications that need to meet the requirements of Regulatory Guide 1.180, "Guidelines for Evaluating Electromagnetic and Radio-Frequency Interference in Safety-Related Instrumentation and Control Systems, Revision 1" published by the U.S. Nuclear Regulatory Commission.

Hazardous Location (Nonincendive) Termination Panels

Hazardous location (nonincendive) termination panels are suitable for use in Zone 2, and Class 1, Division 2 field circuits. These panels contain extra circuitry designed to limit power available to the field terminals and have been examined and certified by TÜV Rheinland as being nonincendive. This guarantees that if the field wires are accidentally opened, shorted, or

grounded, and the Tricon is operating normally, the wiring and attached devices will not release sufficient energy to cause ignition in the specified flammable atmosphere.

Termination Panels with Interposing Relays

Termination panels with interposing relays can be used with most digital output modules and are recommended for these applications:

- Load currents greater than 2 amps
- Field voltages greater than 115 VAC
- Voltage-level conversions
- Motor-starter circuit compatibility

Interposing relay panels are available in these configurations:

- 16-point commoned
- 16-point non-commoned

The digital outputs of the interposing relays are not fault-tolerant. However, each relay provides an auxiliary contact that can be fed into a digital input to send a loopback signal to the control program. A user-written loopback check in the control program can ensure that the relay has achieved its commanded state. The loopback cable must be ordered separately.

Each interposing relay panel provides the capability to common power and return through a factory-mounted bus-bar arrangement.

Each interposing relay panel consists of:

- A 7 in x 19 in (36 cm x 48 cm) rack-mountable panel with terminals for 16 digital outputs and 16 digital inputs.
- Two ELCO connectors mounted on the panel for connecting to digital input modules using digital input cables 9141-010, 9142-010, or 9143-010.
- An EIA standard RS-310-C plate on which the termination panel is mounted.
- A digital output module and a cable compatible with the selected coil voltage.

Bypass Panel for Digital Inputs

Bypass termination panels can be used to connect digital inputs using a bank of 32 pre-wired switches. Bypass panels have a master keyswitch and terminals for redundant +24 VDC power sources. Each input point contains an ON status indicator and can be energized only if the master keyswitch is ON and the corresponding point switch is ON. Each point has a location for a user-definable label.

Each bypass termination panel comes with one or two 10-foot (3-meter) cables for connecting the termination panel to a Tricon backplane.

Termination Panel with RTD/TC/AI Input Signal Conditioning

Termination panels which use industry-standard analog signal conditioners provide a flexible, user-configurable interface to resistive thermal devices (RTDs), thermocouples, and 4-20 mA transmitters. Each termination panel supports 16 points and each analog module can support up to 2 panels. These termination panels are compatible with any signal conditioners in the 1 to 5 volt output range. For example, the 7B series of signal conditioners from Analog Devices™ are known to work well.

Termination Panel 9251-210 for Digital Output Module 3603B

The special 16-point non-commoned digital output termination panel 9251-210 is required for use with the 16-point non-commoned digital output module 3603B.

Termination Panel 9863-710 for Analog Output Module 3806E

The special analog output termination panel 9863-710, with buffered loopback signals, is available for use with the high-current analog output module 3806E.

Cables

Three types of cables can be used with the Tricon:

- Interface Cables
- Fanned-Out Cables
- Special Cables (Relay Loopback)

Interface Cables

Interface cables are packaged with all termination panels. Each interface cable has a female connector on one end for connection to the male connector on a Tricon chassis backplane. The opposite end has a keyed male connector for connection to a termination panel.

Although the standard length of all interface cables is 10 feet (3 meters), you may order any length cable up to 90 feet (27.4 meters) in 10-foot increments using the last two digits of the termination panel's model number to specify length in feet. For example, specify 9xxx-x50 if you want a 50-foot (15 meter) cable instead of the standard 10-foot (3-meter) cable.

Fanned-Out Cables

Fanned-out cables are a lower-cost alternative to using external termination panels. Fanned-out cables allow you to marshal field signals in a separate enclosure up to 99 feet (30 meters) from a Tricon. One end of a fanned-out cable has a female connector that connects to a Tricon chassis backplane. The other end of the cable contains 50 fanned-out leads, each individually labeled with its corresponding connector pin number.

Each fanned-out cable has the following characteristics:

- PVC outer covering
- 56-pin connector at one end
- 50 stranded, stripped, tinned and labeled 22-gauge leads at opposite end

Fanned-out cables should only be used with digital input and digital output modules. They are not certified for use with analog signals. Contact the Triconex Customer Support Center if you need a fanned-out cable for handling analog signals.

Although the normal length of all fanned-out cables is 10 feet (3 meters), any length cable can be ordered up to 99 feet (30 meters) in 1-foot increments, using the last two digits of the cable model number to specify the length in feet. For example, the model number 9101-050 specifies a 50-foot cable instead of the normal 10-foot cable.

Special Cables (Relay Loopback)

If your application requires a special cable, it must be ordered separately. For example, if you want to verify relay activation on a relay termination panel using a digital output module, you must order a relay loopback cable to connect between the relay termination panel and a digital input module. Currently, the only special cable available is the relay loopback cable (914x-010).

2

Field Termination Options and Installation

Overview 10

Determining Field Termination Options by Module Part Number 10

Determining Field Termination Options by Module Type 14

Installation and Removal 24

Overview

This chapter provides information for determining field termination options using module part numbers or module types, and it describes how to install and remove termination panels and fanned-out cables.

Determining Field Termination Options by Module Part Number

This table identifies which termination products you can use with a given I/O module. Match your module part number in the left column to termination options on the right.

Table 1 Termination Product Options (Listed by Module Part Number)

Module Part #	Module Description	Commoned Term Panels	Non-Common. Term Panels	Basic Term Panels	Nonincendive Term Panels	RG 1.180 Term Panels	Fanned-out Cables	Bypass Panels	ERT Loop-Back Cables/Panels
3501E 3501T	DI, 115 VAC/VDC, 32 pts.	9561-810	9561-110	9551-110	n/a	n/a	9101-010	n/a	9141-010
3502E	DI, 48 VAC/VDC, 32 pts.	9562-810	n/a	9552-610	n/a	n/a	9101-010	n/a	9142-010
3503E	DI, 24 VAC/VDC, 32 pts.	9563-810 9563-910	n/a	9553-610	9572-610	n/a	9101-010	BP9228-010	9143-010
3504E	DI, 24/48 VDC, non-isolated, 64 pts.	9566-810, 24V 9565-810, 48V	n/a n/a	9750-310, 24V 9750-410, 48V	9570-610, 24V n/a	n/a	n/a n/a	BP9229-010 n/a	n/a n/a
3505E	DI, 24 VDC, low threshold, 32 pts.	9563-810 9563-910	n/a	9553-610	9572-610	n/a	9101-010	BP9228-010	9143-010
3510	PI, 20-20,000 Hz, 8 pts.	n/a	n/a	9753-110	n/a	n/a	n/a	n/a	n/a
3511	PI, 20-20,000 Hz, 8 pts.	n/a	n/a	9753-110	9793-110	9794-110	n/a	n/a	n/a
3515	Pulse totalizer, 24 VDC, 32 pts.	n/a	n/a	9753-110	9572-610	n/a	n/a	n/a	n/a
3564	DI, 24 VDC, single, 64 pts.	9566-710	n/a	9553-610	9571-610	n/a	9101-010	n/a	n/a
3601E	DO, 115 VAC, 16 pts.	9661-610 9663-610	9661-110 9664-110	9651-110	n/a	n/a	9101-010	n/a	9670-110 9670-610
3601T	DO, 115 VAC, 16 pts.	9663-610	9664-110	n/a	n/a	n/a	n/a	n/a	n/a
3603B	DO, 120 VDC, 16 pts.	n/a	9251–210	n/a	n/a	n/a	n/a	n/a	n/a

Table 1 Termination Product Options (Listed by Module Part Number) *(continued)*

Module Part #	Module Description	Commoned Term Panels	Non-Common. Term Panels	Basic Term Panels	Nonincendive Term Panels	RG 1.180 Term Panels	Fanned-out Cables	Bypass Panels	ERT Loop-Back Cables/Panels
3603E	DO, 120 VDC, 16 pts.	9661-910 9664-810	n/a	9651-110	n/a	n/a	9101-010	n/a	9673-810
3603T	DO, 120 VDC, 16 pts.	9664-810	n/a	n/a	n/a	n/a	n/a	n/a	9673-810
3604E	DO, 24 VDC, 16 pts.	9662-810	9662-110	9653-610	9671-610	n/a	9101-010	n/a	9671-810
3607E	DO, 48 VDC, 16 pts.	9667-810	9667-110	9652-610	n/a	n/a	9101-010	n/a	9672-810
3611E	DO, 115 VAC, 8 pts.	9661-510	n/a	n/a	n/a	n/a	n/a	n/a	n/a
3613E	DO, 120 VDC, 8 pts.	9661-810	n/a	n/a	n/a	n/a	n/a	n/a	n/a
3614E	DO, 24 VDC, 8 pts.	9662-910	n/a	n/a	n/a	n/a	n/a	n/a	n/a
3615E	DO, 24 VDC, low power, 8 pts.	9662-710	n/a	n/a	n/a	n/a	n/a	n/a	n/a
3617E	DO, 48 VDC, 8 pts.	9667-910	n/a	n/a	n/a	n/a	n/a	n/a	n/a
3623	DO, 120 VDC, 16 pts.	9661-910	n/a	9651-110	n/a	n/a	9101-010	n/a	n/a
3623T	DO, 120 VDC, 16 pts.	9664-810	n/a	n/a	n/a	n/a	n/a	n/a	n/a
3624	DO, 24 VDC, 16 pts.	9662-610	n/a	9653-610	9671-610	n/a	9101-010	n/a	n/a
3625	DO, 24 VDC, 32 pts.	9662-610	n/a	9653-610	9671-610	n/a	9101-010	n/a	n/a
3636R 3636T	Relay output (non-triplicated), 32 pts.	n/a	9668-110	9651-110	n/a	n/a	9101-010	n/a	n/a
3664	Dual DO, 24 VDC, self-protected, 32 pts.	9662-610	n/a	9653-610	9671-610	n/a	9101-010	n/a	9671-810
3674	Dual DO, 24 VDC, self-protected, 32 pts.	9662-610	n/a	9653-610	9671-610	n/a	9101-010	n/a	9671-810
3805E 3805H	AO, 4–20 mA, 8 pts.	n/a	n/a	9853-610	9861-610	9860-610	n/a	n/a	n/a
2870H	AO HART Interface	n/a	n/a	9853-610	9861-610	9860-610	n/a	n/a	n/a
3806E	AO, 6 4–20 mA outputs, 2 20–320 mA outputs	n/a	n/a	9863-710 (special panel)	n/a	n/a	n/a	n/a	n/a
3807	AO, 4 bipolar -60 to 60 mA outputs	9871-810	n/a	n/a	9871-810	n/a	n/a	n/a	n/a

Table 1 Termination Product Options (Listed by Module Part Number) *(continued)*

Module Part #	Module Description	Upscale	Downscale	Basic Term Panels	Nonincendive Term Panels	RG 1.180 Term Panels	Fanned-out Cables	Bypass Panels	ERT Loop-Back Cables/Panels
3706A	Thermocouple input, type J, K, T, differential, 32 pts.	9766-210	9766-510	n/a	9784-610, upscale 9785-610, downscale	n/a	n/a	n/a	n/a
3708E	Thermocouple input, type E, J, K, T, isolated, 16 pts.	9765-610	9765-610	n/a	9786-110	9782-110	n/a	n/a	n/a

Module Part #	Module Description	3-Wire 4-20 mA	Voltage	2-Wire 4-20 mA	Nonincendive Term Panels	RG 1.180 Term Panels	Basic	RTD/TC/AI
3700 3700A	AI, 0–5 VDC, differential, 32 pts.	n/a	9763-810	9761-210, 0–5 V 9771-210, 0–5 V	9791-610, current input 9787-110, voltage input	9790-610, current input 9792-610, 4-20 mA, 0-5 V 48 VDC field 9783-110, voltage input 9764-310, RTD/TC/AI input	9753-110, 0–5 V	9764-310[1]
2770H	AI HART Interface	n/a	n/a	9761-210, 0–5 V	9791-610, current input	9790-610, current input	n/a	n/a
3701	AI, 0–10 VDC, differential, 32 pts.	n/a	9763-810	9761-410	n/a	n/a	9753-110, 0–10 V	n/a
3703E[2]	AI, 0–5/0–10 VDC, isolated, 16 pts.	n/a	9763-810	9762-210, 0–5 V 9762-410, 0–10 V 9771-210, 0–5 V	9791-610, current input 9787-110, voltage input	9790-610, 4–20 mA, 0–5 V 9792-610, 4-20 mA, 0-5 V 48 VDC field 9795-610, 4–20 mA, 0–10 V 9783-110, voltage input	9753-110, 0–5/0–10 V	n/a
3704E[2]	AI, 0–5/0–10 VDC, non-isolated, 64 pts.	9765-210, 0–5V	n/a	9760-210, 0–5 V 9760-410, 0–10 V	9789-610, 4–20 mA	n/a	9750-210, 4–20 mA 9750-810, 0–5/0–10 V	n/a
3720	AI, 0–5 VDC, single-ended, 64 pts.	9765-210, 0–5 V	n/a	9760-210, 0–5 V 9760-410, 0–10 V	9789-610, 4–20 mA	n/a	9750-210, 4–20 mA 9750-810, 0–5/0–10 V	

Module Part #	Module Description	3-Wire 4-20 mA	Voltage	2-Wire 4-20 mA	Nonincendive Term Panels	RG 1.180 Term Panels	Basic	RTD/TC/AI
3721	AI; 0 to 5 VDC or –5 to +5 VDC; differential; 32 pts.	n/a	9763-810	9761-210, 0–5 V 9761-410, 0–10 V 9771-210, 0–5 V	9791-610, current input 9787-110, voltage input	9790-610, 4–20 mA, 0–5 V 9792-610, 4-20 mA, 0-5 V 48 VDC field 9795-610, 4–20 mA, 0–10 V 9783-110, voltage input 9764-310, RTD/TC/AI input	9753-110, 0–5 V	

1. Signal conditioners must be ordered separately. A total of 16 is required for each termination panel.
2. Must be configured with TriStation.

Determining Field Termination Options by Module Type

This section identifies external field termination products you can use with each type of module.

Topics include:

- Digital Input Modules on page 14
- Pulse Input Modules on page 15
- Pulse Totalizer Input Modules on page 16
- Digital Output Modules on page 16
- Supervised Digital Output Modules on page 17
- Supervised/Non-Supervised Digital Output Modules on page 17
- Dual Digital Output Modules on page 18
- Relay Output Modules on page 18
- Analog Input Modules on page 19
- Thermocouple Input Modules on page 21
- Analog Output Modules on page 22
- HART Interface Modules on page 23

Digital Input Modules

This table identifies termination products you can use with 32-point digital input modules.

Table 2 Termination Products for 32-Point Digital Input Modules

Termination Option	115 V AC/DC (3501E/T)	48 V AC/DC (3502E)	24 V AC/DC (3503E)	24 VDC (3505E)
Standard termination panel, commoned	9561-810	9562-810	9563-810 9563-910	9563-810 9563-910
Standard termination panel, non-commoned	9561-110	n/a	n/a	n/a
Basic termination panel	9551-110	9552-610	9553-610	9553-610
Nonincendive termination panel	n/a	n/a	9572-610	9572-610
Bypass panel	n/a	n/a	BP9228-010	BP9228-010
Fanned-out cable	9101-010	9101-010	9101-010	9101-010
Relay cable	9141-010	9142-010	9143-010	9143-010

Note You need two termination panels (or cables) for each 32-point or 64-point DI module. Also, you can mix any combination of two termination products listed in a particular module's column. For example, for a 115 VAC/VDC module you may use two 9561-810

commoned panels, or one 9561-810 commoned panel and one 9561-110 non-commoned panel, or one 9551-110 basic panel and one 9101-010 fanned-out cable.

This table identifies termination products you can use with 64-point digital input modules.

Table 3 Termination Products for 64-Point Digital Input Modules

Termination Option	24/48 VDC (3504E)	24 VDC (3564)
Standard termination panel, commoned	9566-810 (24 V) 9565-810 (48 V)	9566-710
Basic termination panel	9750-310 (24 V) 9750-410 (48 V)	9553-610
Nonincendive termination panel	9570-610	9571-610
Bypass panel	BP9229-010	n/a
Fanned-out cable	n/a	9101-010

Pulse Input Modules

This table identifies termination products you can use with pulse input modules. You can use only one termination listed in a particular module's column.

Table 4 Termination Products for 8-Point Pulse Input Modules

Termination Option	20 Hz-20 kHz (3510)	20 Hz-20 kHz (3511)
Basic termination panel	9753-110	9753-110
Nonincendive termination panel	n/a	9793-110
RG 1.180 Term Panel	n/a	9794-110

Note You need one termination panel for each 8-point PI module.

Pulse Totalizer Input Modules

This table identifies termination products you can use with pulse totalizer input modules.

Table 5 Termination Products for 32-Point Pulse Totalizer Input Modules

Termination Option	0-1 kHz (3515)
Basic termination panel	9753-110
Nonincendive termination panel	9572-610
Fanned-out cable	Contact Triconex for availability of pulse totalizer fanned-out cables.

Note You need two termination panels for each 32-point pulse totalizer input module.

Digital Output Modules

This table identifies termination products you can use with 16-point non-supervised digital output modules.

Table 6 Termination Products for 16-Point Non-Supervised Digital Output Modules

Termination Option	115 VAC (3601E)	115 VAC (3601T)	120 VDC (3603B)	120 VDC (3603E)	120 VDC (3603T)	24 VDC (3604E)	48 VDC (3607E)
Standard termination panel, commoned	9661-610 9663-610	9663-610	n/a	9661-910 9664-810	9664-810	9662-810	9667-810
Standard termination panel, non-commoned	9661-110 9664-110	9664-110	n/a	n/a	n/a	9662-110	9667-110
Basic termination panel	9651-110	n/a	n/a	9651-110	9651-110	9653-610	9652-610
Nonincendive termination panel	n/a	n/a	n/a	n/a	n/a	9671-610	n/a
Relay panel, commoned	9670-610	n/a	n/a	9673-810	9673-810	9671-810	9672-810
Relay panel, non-commoned	9670-110	n/a	n/a	n/a	n/a	n/a	n/a
Special panel, non-commoned	n/a	n/a	9251-210	n/a	n/a	n/a	n/a
Fanned-out cable	9101-010	n/a	n/a	9101-010	n/a	9101-010	9101-010

Note You need one termination panel (or cable) for each 16-point non-supervised DO module.

Supervised Digital Output Modules

This table identifies termination products you can use with 8-point supervised digital output modules. You can use only one of the terminations listed in a particular module's column.

Table 7 Termination Products for 8-Point Supervised Digital Output Modules

Termination Option	115 VAC (3611E)	120 VDC (3613E)	24 VDC (3614E)	24 VDC (low power) (3615E)	48 VDC (3617E)
Standard termination panel, commoned	9661-510	9661-810	9662-910	9662-710	9667-910

Note You need one termination panel (or cable) for each 8-point or 16-point supervised DO module.

Table 8 Termination Products for 16-Point Supervised Digital Output Modules

Termination Option	120 VDC (3623)	120 VDC (3623T)	24 VDC (3624)
Standard termination panel, commoned	9661-910	9664-810	9662-610
Basic termination panel	9651-110	9651-110	9653-610
Nonincendive termination panel	n/a	n/a	9671-610
Fanned-out cable	9101-010	n/a	9101-010

Supervised/Non-Supervised Digital Output Modules

This table identifies termination products you can use with 32-point supervised/non-supervised digital output modules.

Table 9 Termination Products for 32-Point Supervised/Non-Supervised Digital Output Modules

Termination Option	24 VDC (3625)
Standard termination panel, commoned	9662-610
Basic termination panel	9653-610
Nonincendive termination panel	9671-610
Fanned-out cable	9101-010

Note You need two termination panels (or cables) for each 32-point digital output module. Also, you can mix any combination of two termination products listed. For example, you may use two 9662-610 panels, or one 9653-610 basic panel and one 9101-010 fanned-out cable, and so on.

Dual Digital Output Modules

This table identifies termination products you can use with dual digital output modules.

Table 10 Termination Products for 32-Point Dual Digital Output Modules

Termination Option	24 VDC (3664, 3674)
Standard termination panel, commoned	9662-610
Basic termination panel	9653-610
Nonincendive termination panel	9671-610
Relay panel, commoned	9671-810
Fanned-out cable	9101-010

Note You need two termination panels (or cables) for each 32-point dual digital output module. Also, you can mix any combination of two termination products listed. For example, you may use two 9662-610 panels, or one 9653-610 basic panel and one 9101-010 fanned-out cable, and so on.

Relay Output Modules

This table identifies termination products you can use with relay output modules.

Table 11 Termination Products for 32-Point Relay Output Modules

Termination Option	Non-Commoned, Normally Open (3636R, 3636T)
Standard termination panel, non-commoned	9668-110
Basic termination panel, non-commoned	9651-110
Fanned-out cable	9101-010

Note You need two termination panels (or cables) for each 32-point relay output module. Also, you can mix any combination of two termination products listed. For example, you may use two 9668-110 panels, two 9651-110 basic panels, or one 9668-110 panel and one 9651-110 basic panel.

Analog Input Modules

This table identifies termination products you can use with analog input modules.

Table 12 Termination Products for 16-Point Analog Input Modules

Termination Option	0-5 VDC or 0-10 VDC (3703E)
Standard termination panel, voltage input	9763-810
Standard termination panel, current input	9762-210 (0–5 V) 9762-410 (0–10 V)
Standard termination panel, current input, user configurable	9771-210 (0–5 V)
Basic termination panel, voltage input	9753-110
Nonincendive termination panel, current input	9791-610
Nonincendive termination panel, voltage input	9787-110
RG 1.180 Term Panel	9790-610 (4–20 mA, 0–5 V) 9792-610 (4-20 mA, 0-5 V, 48 VDC field) 9795-610 (4–20 mA, 0–10 V) 9783-110 (voltage input)
Fanned-out cable	Contact Triconex for availability of analog fanned-out cables.

Note You need one termination panel for each 16-point AI module.

This table identifies termination products you can use with 32-point analog input modules.

Table 13 Termination Products for 32-Point Analog Input Modules

Termination Option	0-5 VDC (3700A)	0-10 VDC (3701)	0 to 5 VDC or -5 to +5 VDC (3721)
Standard termination panel, voltage input	9763-810	9763-810	9763-810
Standard termination panel, current input	9761-210	9761-410	9761-210
Standard termination panel, current input, user configurable	9771-210	n/a	9771-210 (0–5 V) 9761-410 (0–10 V)
Basic termination panel, voltage input	9753-110	9753-110	9753-110
Nonincendive termination panel, current input	9791-610	n/a	9791-610
Nonincendive termination panel, voltage input	9787-110	n/a	9787-110
RG 1.180 Term Panel	9790-610 (current input) 9792-610 (4-20 mA, 0-5 V, 48 VDC field) 9783-110 (voltage input) 9764-310, RTD/TC/AI input	n/a	9790-610 (4–20 mA, 0–5 V) 9792-610 (4-20 mA, 0-5 V, 48 VDC field) 9795-610 (4–20 mA, 0–10 V) 9783-110 (voltage input) 9764-310, RTD/TC/AI input
RTD/TC/AI panel	9764-310	n/a	n/a
Fanned-out cable	Contact Triconex for availability of analog fanned-out cables.		

Note You need two termination panels (or cables) for each 32-point AI module. Also, you can mix any combination of two termination products listed in a particular module's column. For example, with 0–5 VDC modules you may choose two 9763-810 panels, or a 9753-110 basic panel and a 9764-310 RTD/TC/AI panel, and so on.

Table 14 Termination Products for 64-Point Analog Input Modules

Termination Option	0-5 VDC or 0-10 VDC (3704E)	0-5 VDC (3720)
Standard termination panel, 3-wire Xmtr	9765-210	9765-210
Standard termination panel, current input	9760-210 (0–5 V) 9760-410 (0–10 V)	9760-210 (0–5 V) 9760-410 (0–10 V)
Basic termination panel, current input	9750-210 (0–5 V)	9750-210

Table 14 Termination Products for 64-Point Analog Input Modules *(continued)*

Termination Option	0-5 VDC or 0-10 VDC (3704E)	0-5 VDC (3720)
Basic termination panel, voltage input	9750-810 (0–5 V/0–10 V)	9750-810
Nonincendive termination panel, current input	9789-610	9789-610
Fanned-out cable	Contact Triconex for availability of analog fanned-out cables.	

Note You need two termination panels (or cables) for each 64-point AI module. Also, you can mix any combination of two termination products listed. For example, you may choose two 9760-210 panels, or a 9750-210 basic panel and a 9760-210 panel, and so on.

Thermocouple Input Modules

This table identifies termination products you can use with 16-point thermocouple input modules. You can use only one termination listed in a particular module's column.

Table 15 Termination Products for 16-Point Thermocouple Input Modules

Termination Option	Type E, J, K, and T; High-Density (3708E)
Standard termination panel	9765-610
Nonincendive termination panel	9786-110
RG 1.180 Term Panel	9782-110

Note You need one termination panel for each 16-point thermocouple input module.

This table identifies termination products you can use with 32-point thermocouple input modules.

Table 16 Termination Products for 32-Point Thermocouple Input Modules

Termination Option	Type J, K, and T; Differential; Non-Isolated (3706A)
Standard termination panel, upscale	9766-210
Standard termination panel, downscale	9766-510
Nonincendive termination panel, upscale	9784-610
Nonincendive termination panel, downscale	9785-610

Note You need two termination panels for each 32-point thermocouple input module. Also, you can use a 9766-210 panel with a 9766-510 panel.

Analog Output Modules

This table identifies termination products you can use with 8-point analog output modules.

Table 17 Termination Products for 8-Point Analog Output Modules

Termination Option	4-20 mA (3805E/H)	6, 4-20 mA; 2, 20-320 mA (3806E)
Basic termination panel	9853-610	n/a
Special panel (Recommended for use in turbine-control applications)	n/a	9863-710
Nonincendive termination panel	9861-610	n/a
RG 1.180 Term Panel	9860-610	n/a
Fanned-out cable	Contact Triconex for availability of analog fanned-out cables.	

Note You need one termination panel for each 8-point AO module.

This table identifies termination products you can use with 4-point bipolar analog output modules.

Table 18 Termination Products for 4-Point BiPolar Analog Output Modules

Termination Option	BiPolar -60 to 60 mA (3807)
Standard termination panel	9871-810
Nonincendive termination panel	9871-810
Fanned-out cable	Contact Triconex for availability of analog fanned-out cables.

Note You need one termination panel for each 4-point BPAO module.

HART Interface Modules

This table identifies termination products you can use with HART AI and AO interface modules.

Table 19 Termination Products for HART Interface Modules

Termination Option	HART AI Interface (2770H)	HART AO Interface (2870H)
Standard termination panel, current input	9761-210	n/a
Basic termination panel	n/a	9853-610
Nonincendive termination panel	9791-610	9861-610
RG 1.180 termination panel	9790-610	9860-610

Installation and Removal

This section explains how to install and remove termination panels and fanned-out cables.

Topics include:

- Installing a Termination Panel on page 24
- Removing or Replacing a Termination Panel on page 30
- Installing a Fanned-Out Cable on page 31
- Removing or Replacing a Fanned-Out Cable on page 31

WARNING Perform the installation, removal, and replacement procedures according to the safety requirements for your environment.

CAUTION

- To ensure safe operation, install the recommended fuse type and value. To avoid electrical shock and equipment damage while removing a blown fuse, use the fuse-extractor tool (#158000–01) supplied with the system.
- The connector on each external termination panel, interface cable, and special cable is factory-keyed by voltage and module type to protect against accidental connection to an incompatible product. If you use a fanned-out cable instead of a termination panel, you must re-key its connector according to Appendix A, Re-Keying Connectors.

Installing a Termination Panel

This procedure explains how to install a termination panel.

Procedure

1. Set up the Tricon chassis and install the I/O modules as described in the *Planning and Installation Guide for Tricon v9–v10 Systems*.
2. Remove incoming power from the Tricon system (optional).
3. Mount the termination panel on a DIN rail as shown in these pictures.

   Note These termination panels *cannot* be installed on a DIN rail. They must be installed on a standard 19 inch (47.5 cm) rack (Electronics Industries Association Standard #RS-310-C):

   - 9251-210
   - 9670-110
   - 9670-610
   - 9671-810
   - 9672-810
   - 9673-810

- BP9228-010
- BP9229-010
- 9764-310

Place the bottom of the DIN rail into the lower brackets on the back of the term panel.

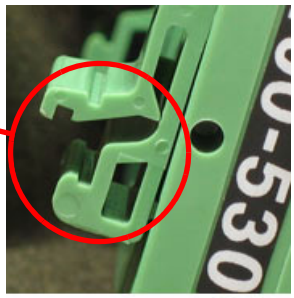

After placing the bottom of the DIN rail, place the top of the DIN rail into the upper brackets and snap the top rail edge into the grooves.

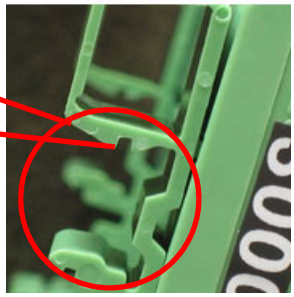

This picture shows a term panel being mounted properly on a DIN rail.

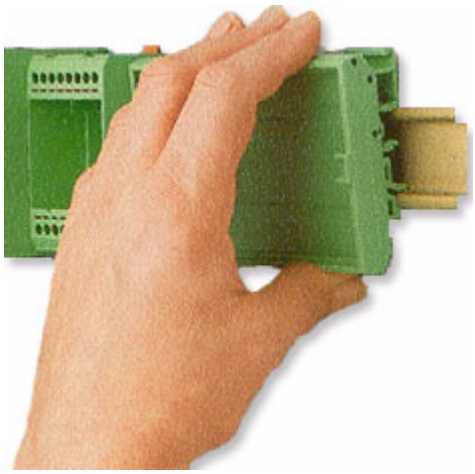

WARNING For applications requiring high shock/vibration or seismic immunity, attach a ground terminal block to the DIN rail at either end of the term panel (or string of term panels) to prevent the term panel(s) from sliding along the DIN rail, as shown in this picture. For Nuclear Class 1E applications, additional installation guidelines may be applicable and must be considered. Please contact the IPS Global Client Support (GCS) center for details.

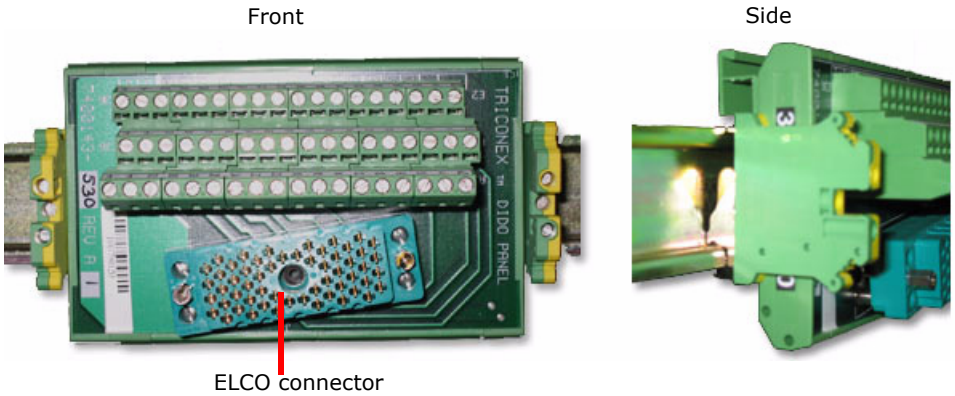

4 Attach one end of the interface cable to the ELCO connector on the termination panel.

- Ensure that the mating surfaces of the ELCO connectors on the cable and the termination panel do not have any bent pins or other damage, and that both male and female keys match.
- Position the connector on the cable so that it is aligned with the connector on the termination panel.

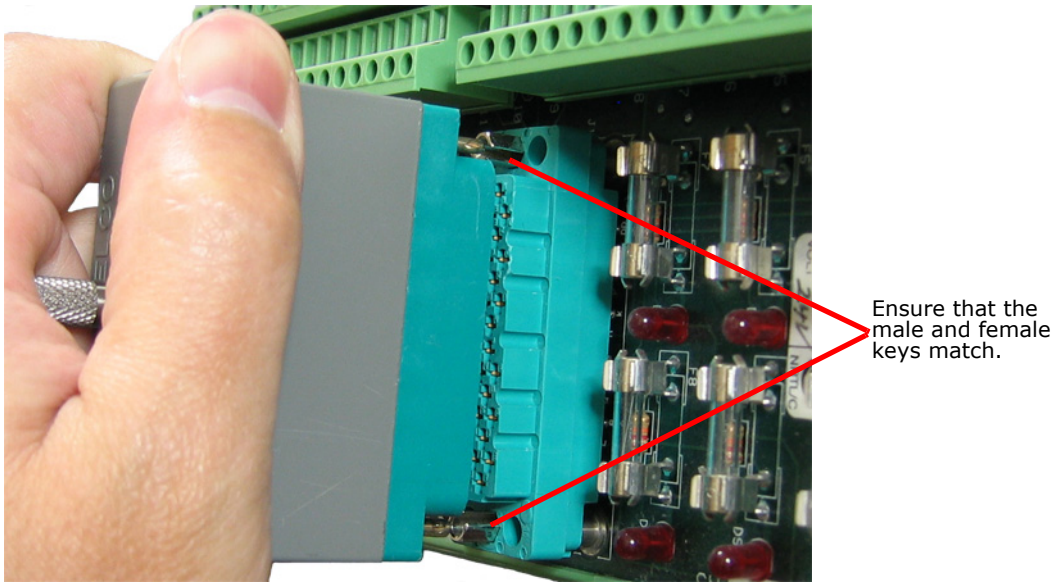

- Mate the two connectors together until the threaded end of the thumbscrew is making contact with the nut in the female connector. You may need to slightly rock the connector on the cable while mating it to the connector on the termination panel.
- As you apply pressure to the top of the connector on the cable, use your other hand to turn the thumbscrew clockwise until the connectors are mated completely. The minimum torque requirement is 8.85 lb_f in (10.0 d-Nm).

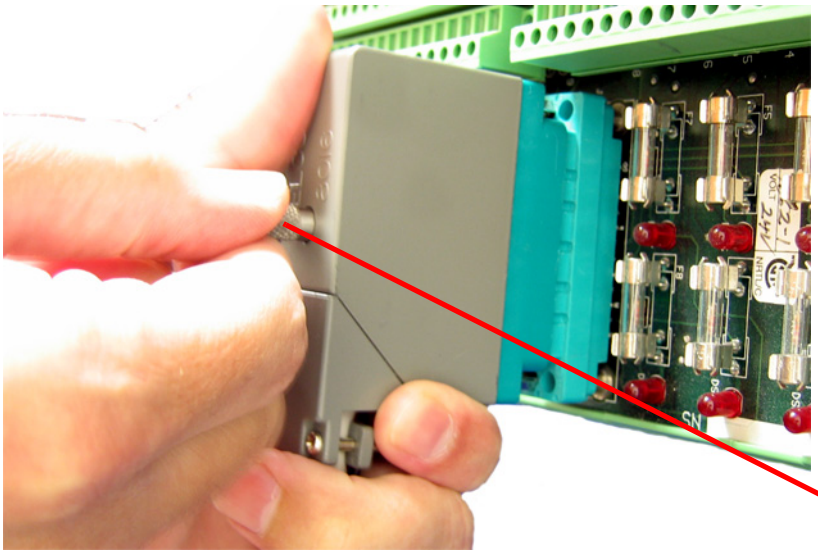

Turn the thumbscrew clockwise...

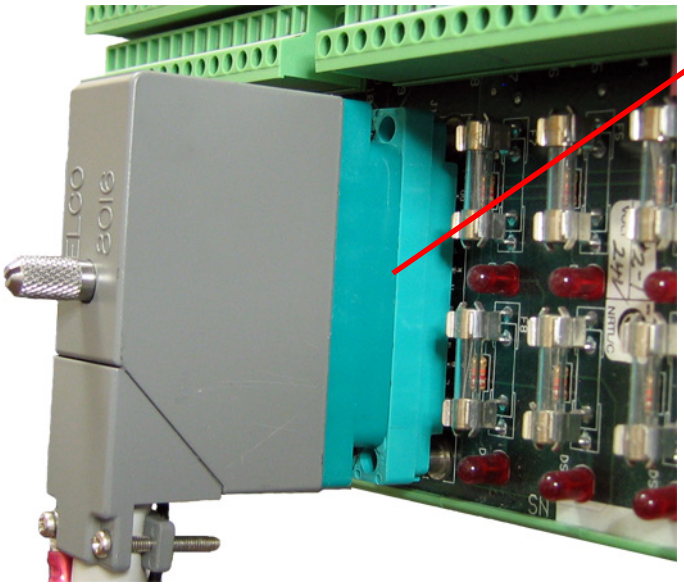

...until the connectors are fully mated.

WARNING You *must* use gasket 2000098-100 on the male side of all ELCO connectors used in ATEX installations, and replace it before the end of its five-year life span. Triconex *recommends* that you use the gasket in all hazardous locations requiring nonincendive circuits. (Order Triconex part number 3000793-001 for a kit of 25 gaskets.)

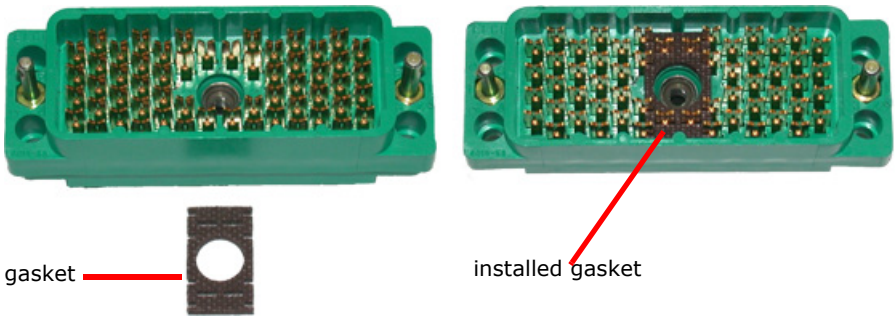

5. Attach the other end of the interface cable to the ELCO connector directly above the corresponding I/O module on the Tricon backplane in the same manner as you connected the cable to the termination panel, as described in step 4.
6. Attach the wires from your field devices to the screw terminals on the termination panel. See the Torque Specifications for Field Wiring Terminals section.
7. Perform a static check of the wiring.
8. If Tricon power was removed in step 1, restore power to the Tricon system.
9. Apply field power to the termination panel.
10. Verify that all I/O points are connected to the appropriate field devices and are operating correctly.

    Note To inspect input points and force output points, see the *Planning and Installation Guide for Tricon v9–v10 Systems*.

11. Load and test the control program using TriStation.

If the program operates as intended, you are ready to enable the process equipment according to the safety requirements for your environment.

If you need additional information on how to install external field termination panels, contact the IPS Global Client Support (GCS) center.

Torque Specifications for Field Wiring Terminals

Tighten the screws on the field wiring and power terminals of the ETPs in the list below to this torque:

4.425–5.310 lb_f in (0.3688–0.4425 lb_f ft) (0.5–0.6 Nm)

9551-110	9651-110	9664-110	9761-210	9787-110
9552-610	9652-610	9664-810	9761-410	9789-610
9553-610	9653-610	9667-110	9762-410	9790-610
9561-810	9661-610	9667-910	9762-210	9791-610
9561-110	9661-710	9667-610	9763-810	9792-610
9562-810	9661-110	9667-710	9765-210	9793-110
9563-810	9661-810	9667-810	9765-610	9794-110
9565-810	9661-510	9668-110	9766-210	9795-610
9565-710	9661-910	9750-410	9766-510	9853-610
9566-710	9662-110	9750-810	9771-210	9860-610
9566-810	9662-910	9750-210	9782-110	9861-610
9567-810	9662-610	9750-310	9783-110	9863-710
9570-610	9662-710	9753-110	9784-610	
9571-610	9662-810	9760-410	9785-610	
9572-610	9663-610	9760-210	9786-110	

Tighten the screws on the field wiring and power terminals of the ETPs in the list below to this torque:

12.0 lb_f in (1.0 lb_f ft) (1.36 Nm)

9670-110
9670-610
9671-610
9671-810
9672-810
9673-810

Removing or Replacing a Termination Panel

This procedure explains how to remove or replace a termination panel.

Procedure

1. Remove field power from the termination panel.
2. Detach all I/O points connected to the appropriate field wiring.
3. Detach the wires from your field devices to the screw terminals on the termination panel.
4. Detach the interface cable from the ELCO connector on the termination panel.
   - As you pull the connector on the cable, use your other hand to turn the thumbscrew counter-clockwise. You may need to rock the connector slightly while pulling.
   - Ensure that the mating surfaces of the ELCO connectors on the cable and the termination panel do not have any bent pins or other damage.
5. Detach the other end of the interface cable from the ELCO connector on the Tricon backplane in the same manner as you disconnected the cable from the termination panel, as described in step 4.

WARNING Verify that power to the termination panel is off and that steps 1-4 have been followed. Dangerous voltage may be present on the ELCO connector.

6. Dismount the termination panel from the DIN or rack rail.
7. To replace a termination panel, follow the procedure in Installing a Termination Panel on page 24.

Installing a Fanned-Out Cable

This procedure explains how to install a fanned-out cable.

Procedure

1. Set up the Tricon chassis and install the I/O modules as described in the *Planning and Installation Guide for Tricon v9–v10 Systems*.
2. Remove incoming power from the Tricon system (optional).
3. Re-key the female connector on the fanned-out cable to match the male connector on the Tricon backplane. For instructions, see Appendix A, Re-Keying Connectors.
4. Attach the fanned-out cable connector to the panel connector that is above the corresponding I/O module.
5. Connect the fanned-out cable wires to the field devices or marshaling termination.
6. Perform a static check of the wiring.
7. If Tricon power was removed in step 1, restore power to the Tricon system.
8. Apply field power to the devices connected to the fanned out cable.
9. Verify the connection of all I/O points to the appropriate field wiring by using the TriStation software to inspect input points and force output points.

   Note To inspect input points and force output points, see the *Planning and Installation Guide for Tricon v9–v10 Systems*.
10. Load and test the control program using TriStation.

If you need additional information on how to install fanned-out cables, contact the IPS Global Client Support (GCS) center.

Removing or Replacing a Fanned-Out Cable

This procedure explains how to remove or replace a fanned-out cable.

Procedure

1. Remove field power from the termination panel.
2. Detach the fanned-out cable connector that is above the corresponding I/O module.
3. Detach the fanned-out wires from the field termination panel or the field devices.

WARNING Verify that power to the termination panel is off and that steps 1–3 have been followed. Dangerous voltages may be present on the ELCO connector if power has not been removed from the termination panel.

4. To replace a fanned-out cable, follow the procedure in Installing a Fanned-Out Cable on page 31.

3

Digital Input Termination Panels

Overview 34

16-Point Commoned Digital Input Term Panels 35

32-Point Commoned Digital Input Term Panels 46

16-Point Non-Commoned Digital Input Term Panels 54

Basic Digital Input Term Panels 57

Pulse Input and Pulse Totalizer Input Term Panels 70

Bypass Term Panels 75

Overview

This chapter describes external field termination panels you can use with digital input modules. Digital input termination panels are available in these configurations:

- 16-point commoned
- 32-point commoned
- Non-commoned
- Basic
- Bypass

16-Point Commoned Digital Input Term Panels

This section describes 16-point commoned digital input term panels. Model numbers of these term panels are:

- 9561-810 (115 V, commoned, 16 pts.)
- 9562-810 (48 V, commoned, 16 pts.)
- 9563-810 (24 V, commoned, 16 pts.)
- 9563-910 (24 V, commoned, resistor protected, 16 pts.)

This figure represents a typical 16-point commoned digital input termination panel with fuses and blown-fuse indicators.

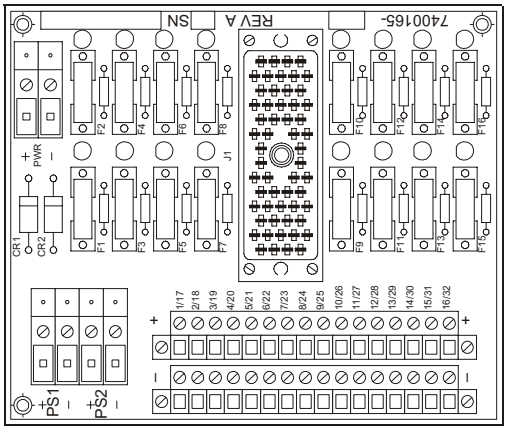

Figure 1 Typical 16-Point Commoned DI Term Panel with Fuse Protection

This figure represents a typical 16-point commoned digital input termination panel with resistors.

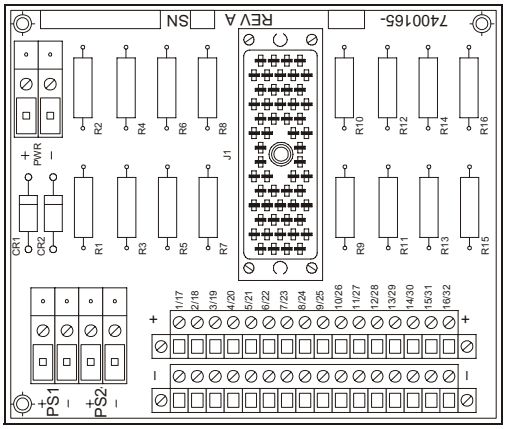

Figure 2 Typical 16-Point Commoned DI Term Panel with Resistor Protection

9561-810 (115 V, commoned, 16 pts.)

Termination panel 9561–810 is compatible with 115 volt digital input modules and has 16 input points and commoned power terminals (PWR+ and PWR–). Each input point is protected by a fuse with a blown-fuse indicator.

The modules compatible with 9561–810 have 32 points, which means you must use two term panels for each digital input module.

Each term panel comes with two sets of labels: 1-16 and 17-32. For information on how to apply the labels, see Appendix F, Panel Labels.

Specifications

This table describes specifications for 9561–810.

Table 20 Specifications for Term Panel 9561-810

Feature	Description
Panel type	Commoned
Points	16
Leakage current per point	Maximum: 3.3 mA Typical: 2.5 mA

Compatible Modules

This table describes digital input modules compatible with 9561–810.

Table 21 Modules Compatible with 9561-810

Module Part Number	Points per Module	Module Description	Fuse
3501E	32	115 VAC/VDC, non-commoned, isolated, TMR	1A, slow
3501T	32	115 VAC/VDC, non-commoned, isolated, TMR	1A, slow

Field Wiring Diagrams

This figure illustrates how to connect a 32-point digital input module and a 9561–810 with a DC power supply to the field.

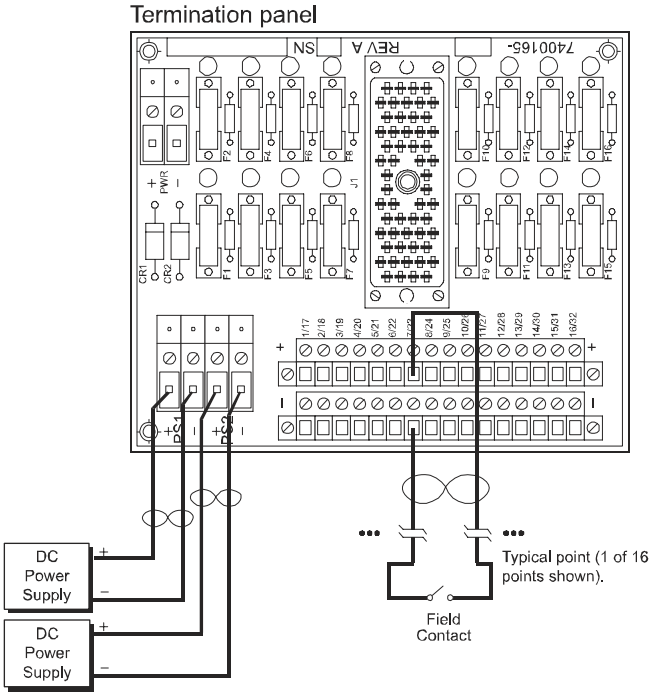

Figure 3 Field Wiring for 9561-810 with a 3501E or 3501T Module and a DC Power Supply

This figure illustrates how to connect a 32-point digital input module and a 9561-810 with an AC power supply to the field.

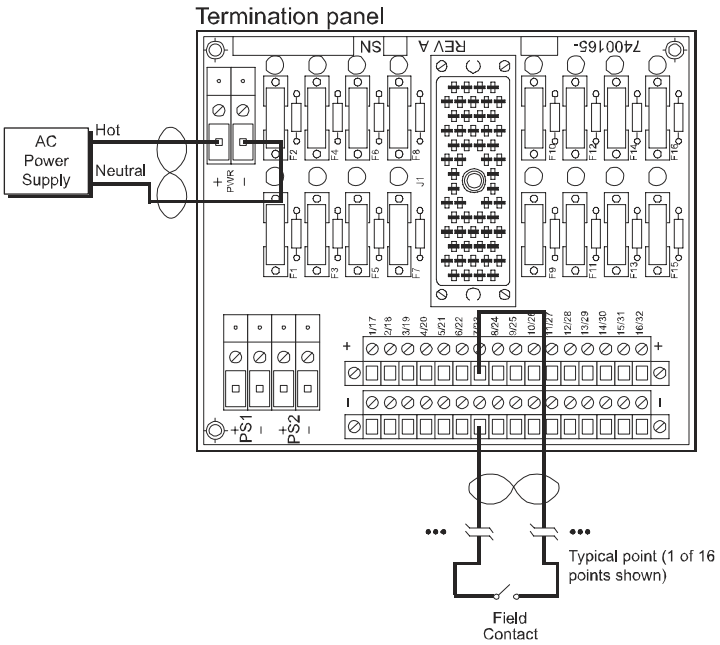

Figure 4 Field Wiring for 9561-810 with a 3501E or 3501T Module and an AC Power Supply

Simplified Schematics

This is a simplified schematic of a typical 32-point commoned digital input module with a commoned digital input panel (1 of 32 module points shown).

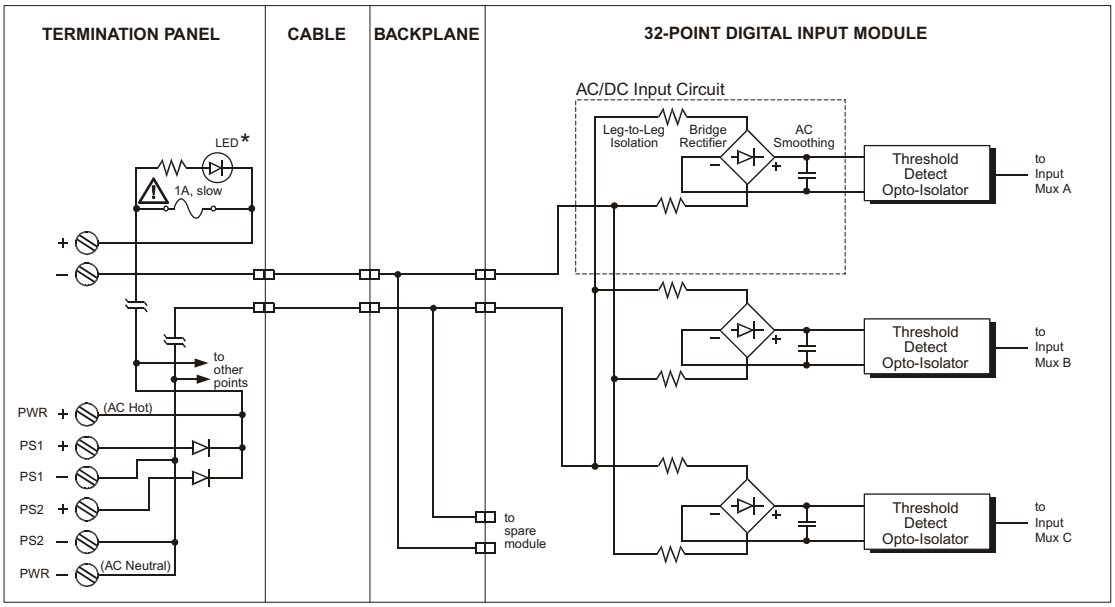

* LEDs are blown-fuse indicators

Figure 5 Simplified Schematic of a 3501E or 3501T DI Module with a 9561-810 Panel

9562-810 (48 V, commoned, 16 pts.)

Termination panel 9562–810 is compatible with 48 volt digital input modules and has 16 input points and commoned power terminals (PWR+ and PWR–). Each input point is protected by a fuse with a blown-fuse indicator.

The modules compatible with 9562–810 have 32 points, which means you must use two term panels for each digital input module.

Each term panel comes with two sets of labels: 1-16 and 17-32. For information on how to apply the labels, see Appendix F, Panel Labels.

Specifications

This table describes specifications for 9562–810.

Table 22 Specifications for Term Panel 9562-810

Feature	Description
Panel type	Commoned
Points	16
Leakage current per point	Maximum: 3.5 mA Typical: 2.0 mA

Compatible Modules

This table describes digital input modules compatible with 9562–810.

Table 23 Modules Compatible with 9562-810

Module Part Number	Points per Module	Module Description	Fuse
3502E	32	48 VAC/VDC, commoned in groups of 8, TMR with self-test	1A, slow

Field Wiring Diagrams

This figure illustrates how to connect a 32-point digital input module and a 9562–810 to the field.

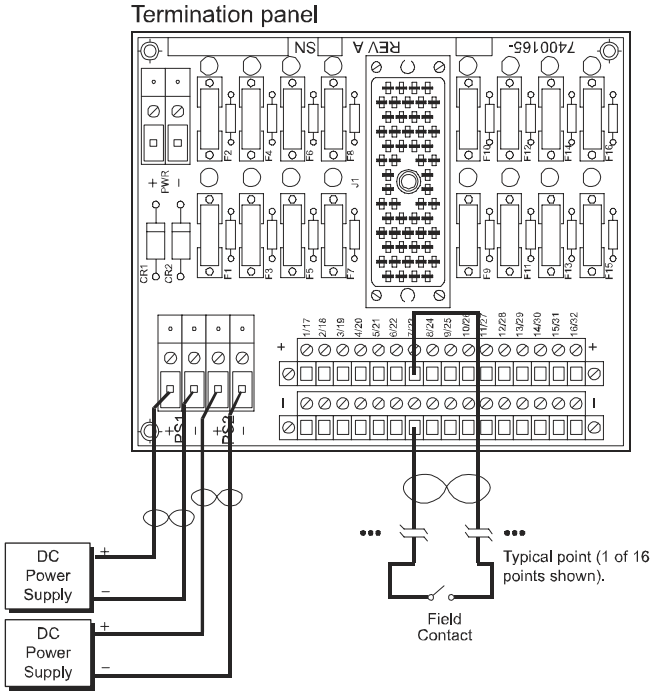

Figure 6 Field Wiring for 9562-810 with a 3502E Module

Simplified Schematics

This is a simplified schematic of a typical 32-point commoned digital input module with self-test (1 of 32 module points shown).

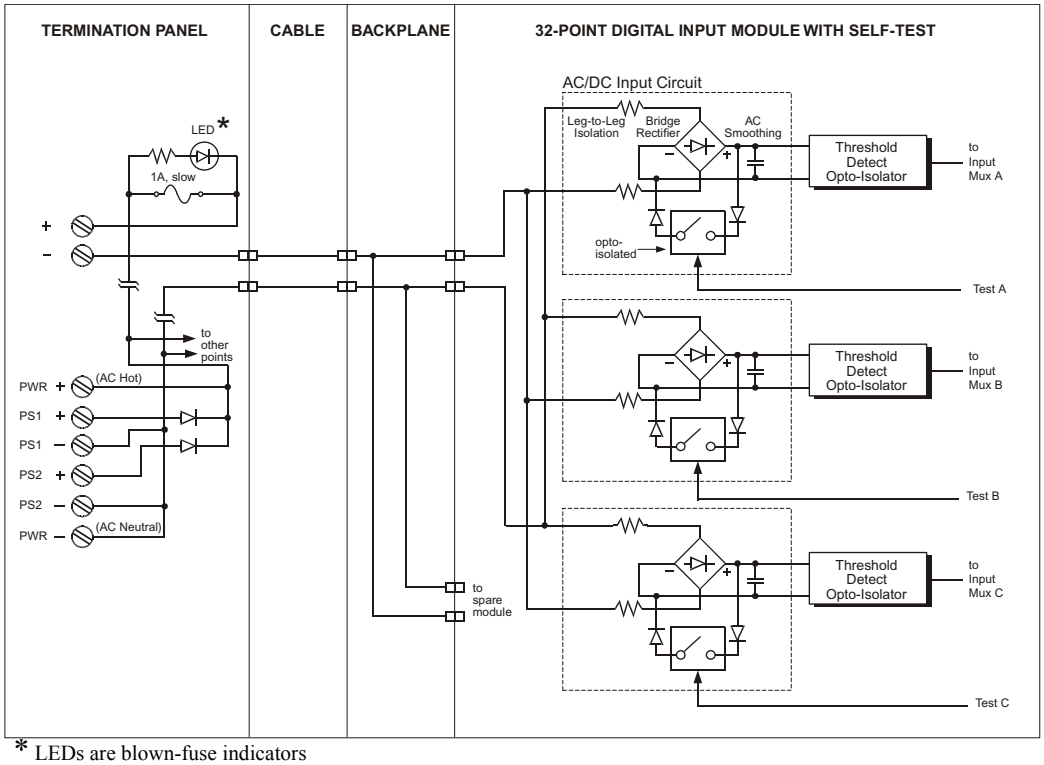

* LEDs are blown-fuse indicators

Figure 7 Simplified Schematic of a 3502E DI Module with a 9562-810 Panel

9563-810 (24 V, commoned, 16 pts.)

Termination panel 9563–810 is compatible with 24 volt digital input modules and has 16 input points and commoned power terminals (PWR+ and PWR–). Each input point is protected by a fuse with a blown-fuse indicator.

The modules compatible with 9563–810 have 32 points, which means you must use two term panels for each digital input module.

Each term panel comes with two sets of labels: 1-16 and 17-32. For information on how to apply the labels, see Appendix F, Panel Labels.

Specifications

This table describes specifications for 9563–810.

Table 24 Specifications for Term Panel 9563-810

Feature	Description
Panel type	Commoned
Points	16
Leakage current per point	Maximum: 3.3 mA Typical: 2.5 mA

Compatible Modules

This table describes digital input modules compatible with 9563–810.

Table 25 Modules Compatible with 9563-810

Module Part Number	Points per Module	Module Description	Fuse
3503E	32	24 VAC/VDC, commoned in groups of 8, TMR with self-test	1A, slow
3505E	32	24 VDC, low-threshold, commoned in groups of 8 with self test, TMR	1A, slow

Field Wiring Diagrams

This figure illustrates how to connect a 32-point digital input module and a 9563–810 to the field.

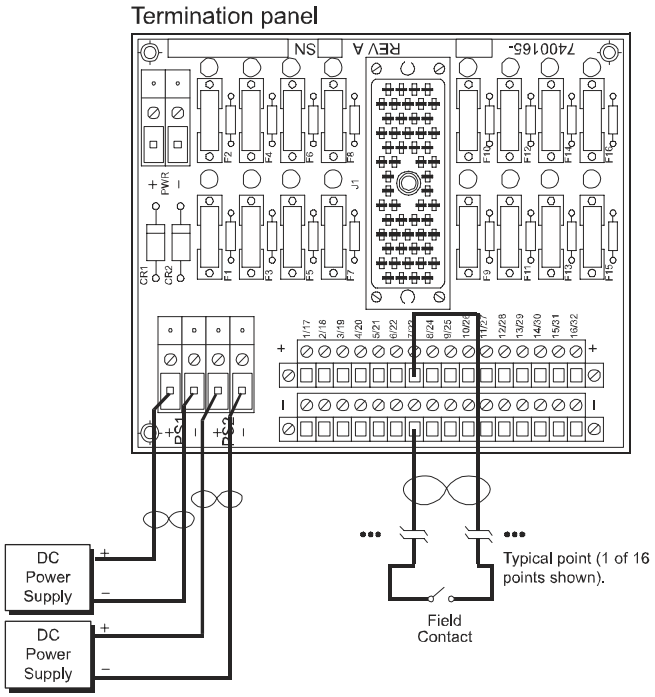

Figure 8 Field Wiring for 9563-810 with a 3503E or 3505E Module

Simplified Schematics

This is a simplified schematic of a typical 32-point commoned digital input module with self-test (1 of 32 module points shown).

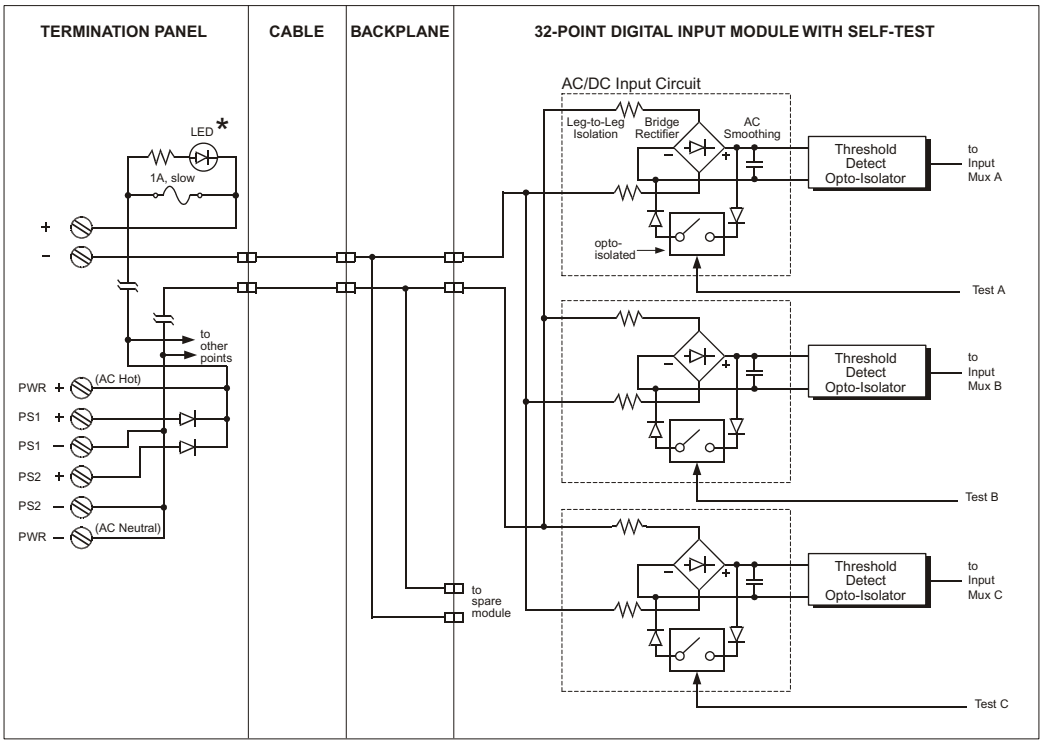

* LEDs are blown-fuse indicators

Figure 9 Simplified Schematic of a 3503E or 3505E DI Module with a 9563-810 Panel

9563-910 (24 V, commoned, resistor protected, 16 pts.)

Termination panel 9563-910 is compatible with 24 volt digital input modules and has 16 input points and commoned power terminals (PWR+ and PWR–). Each input point is protected by a 180 ohm resistor.

The modules compatible with 9563-910 have 32 points, which means you must use two term panels for each digital input module.

Each term panel comes with two sets of labels: 1-16 and 17-32. For information on how to apply the labels, see Appendix F, Panel Labels.

Specifications

This table describes specifications for 9563-910.

Table 26 Specifications for Term Panel 9563-910

Feature	Description
Panel type	Commoned, resistor protected
Points	16

Compatible Modules

This table describes digital input modules compatible with 9563-910.

Table 27 Modules Compatible with 9563-910

Module Part Number	Points per Module	Module Description
3503E	32	24 VAC/VDC, commoned in groups of 8, TMR with self-test
3505E	32	24 VDC, low-threshold, commoned in groups of 8, TMR with self-test

Field Wiring Diagrams

This figure illustrates how to connect a 32-point digital input module and a 9563-910 to the field.

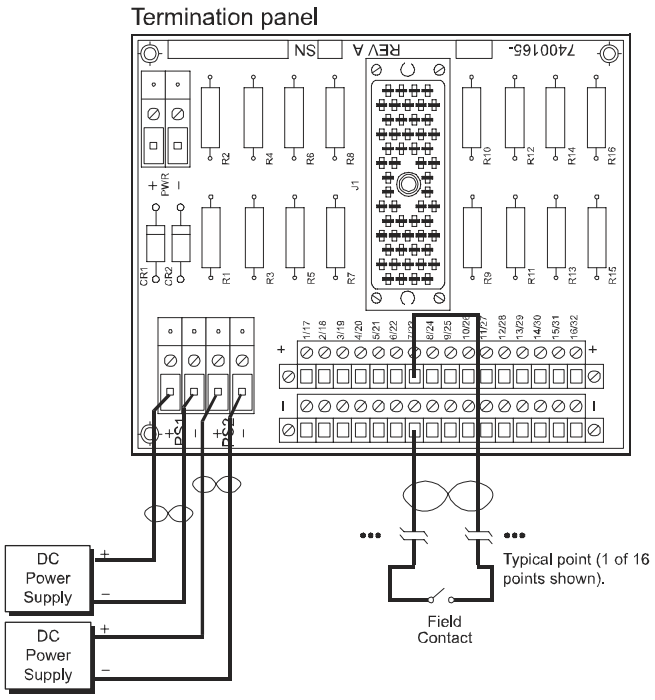

Figure 10 Field Wiring for 9563-910 with a 3503E or 3505E Module

Simplified Schematics

This is a simplified schematic of a typical 32-point commoned digital input module with self-test (1 of 32 module points shown).

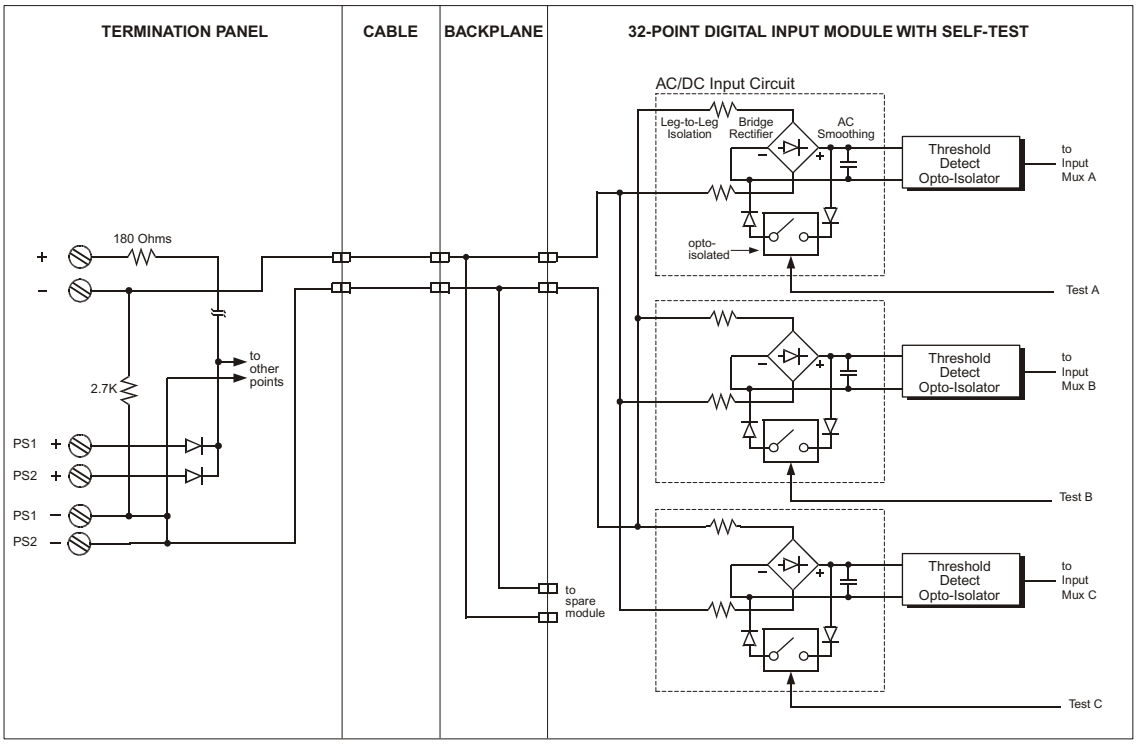

Figure 11 Simplified Schematic of a 3503E or 3505E DI Module with a 9563-910 Panel

32-Point Commoned Digital Input Term Panels

This section describes 32-point commoned digital input term panels, which are available with fuses and blown fuse indicators or resistors for field device protection. Model numbers of these term panels are:

- 9565-810 (48 VDC, commoned, 32 pts.) (fuse protection)
- 9566-710 (24 VDC, commoned, 32 pts.) (resistor protection)
- 9566-810 (24 VDC, commoned, 32 pts.) (resistor protection)

This figure represents a typical 32-point commoned digital input term panel that has fuses and blown-fuse indicators for field device protection.

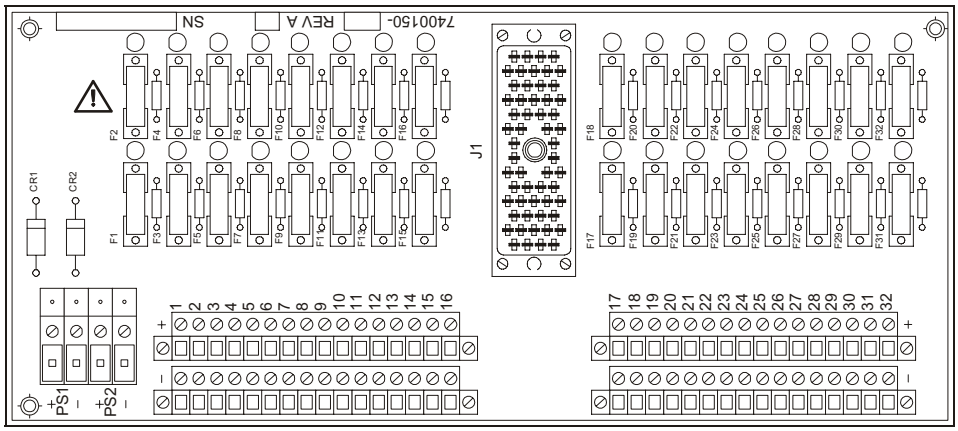

Figure 12 Typical 32-Point Commoned DI Term Panel with Fuse Protection

This figure represents a typical 32-point commoned digital input term panel that has resistors for field device protection.

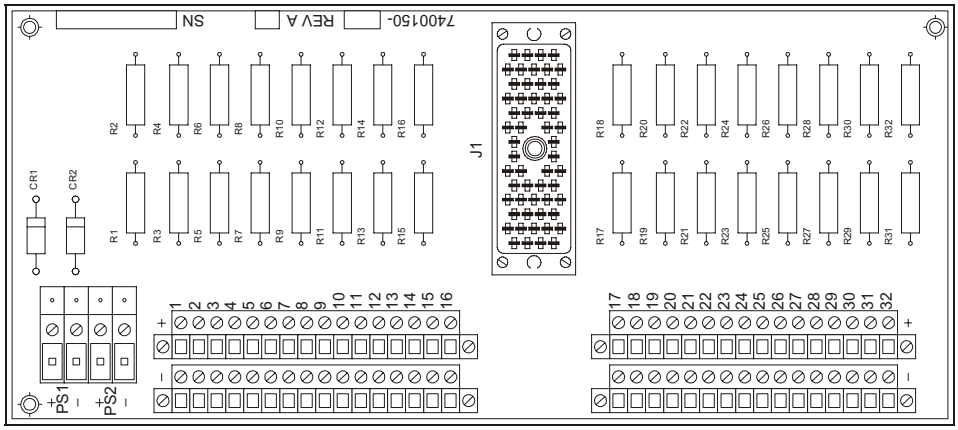

Figure 13 Typical 32-Point Commoned DI Term Panel with Resistor Protection

9565-810 (48 VDC, commoned, 32 pts.)

Termination panel 9565–810 is compatible with 24/48 volt DC digital input modules and has 32 input points and commoned power terminals (PWR+ and PWR–). Each input point is protected by a fuse with a blown-fuse indicator. You should use term panel 9565-810 in 48 volt applications.

The modules compatible with 9565–810 have 64 points, which means you must use two term panels for each digital input module.

Each term panel comes with two sets of labels: 1-32 and 33-64. For information on how to apply the labels, see Appendix F, Panel Labels.

Specifications

This table describes specifications for 9565–810.

Table 28 Specifications for Term Panel 9565-810

Feature	Description
Panel type	Commoned
Points	32
Leakage current per point	Maximum: 3.5 mA Typical: 2.0 mA

Compatible Modules

This table describes digital input modules compatible with 9565–810.

Table 29 Modules Compatible with 9565-810

Module Part Number	Points per Module	Module Description	Fuse
3504E	64	24/48 VDC, commoned, high-density, DC-coupled, TMR	1A, slow

Field Wiring Diagrams

This figure illustrates how to connect a 64-point digital input module and a 9565–810 to the field.

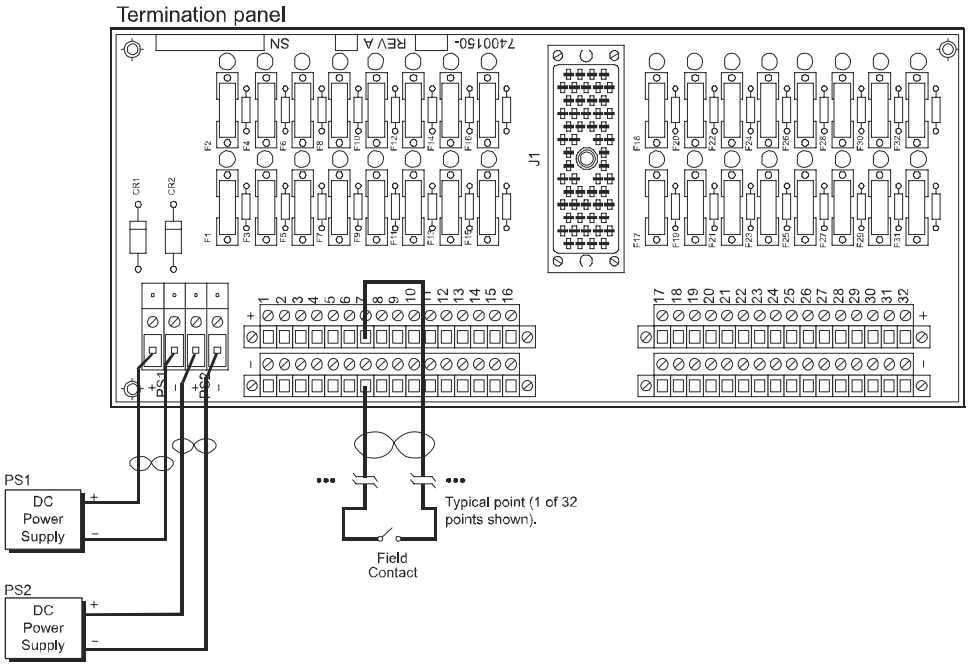

Figure 14 Field Wiring for 9565-810 with a 3504E Module

Simplified Schematics

This is a simplified schematic of a typical 64-point commoned 48 VDC high-density DC-coupled digital input module (1 of 64 module points shown) with a 9565–810.

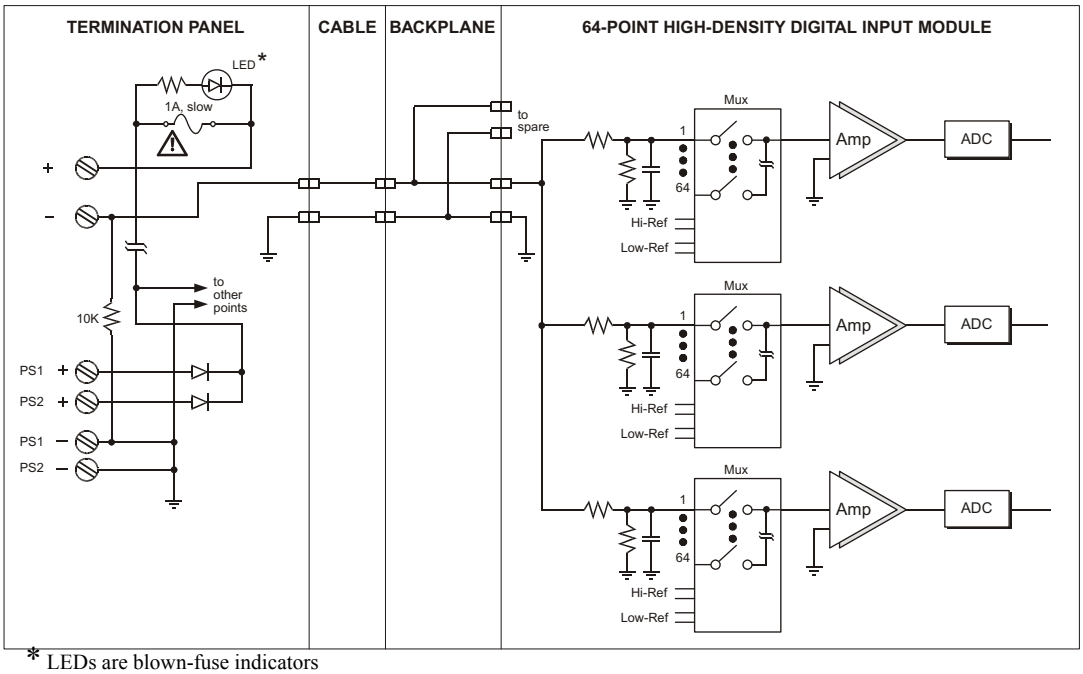

* LEDs are blown-fuse indicators

Figure 15 Simplified Schematic of a 3504E DI Module in a 48 V Application with a 9565-810 Panel

9566-710 (24 VDC, commoned, 32 pts.)

Termination panel 9566–710 is compatible with 24 VDC digital input modules and has 32 input points and commoned power terminals (PWR+ and PWR–). Each input point is protected by a 180 ohm current-limiting resistor.

The modules compatible with 9566–710 have 64 points, which means you must use two term panels for each digital input module.

Each term panel comes with two sets of labels: 1-32 and 33-64. For information on how to apply the labels, see Appendix F, Panel Labels.

Specifications

This table describes specifications for 9566–710.

Table 30 Specifications for Term Panel 9566-710

Feature	Description
Panel type	Commoned
Points	32

Compatible Modules

This table describes digital input modules compatible with 9566–710.

Table 31 Modules Compatible with 9566-710

Module Part Number	Points per Module	Module Description
3564	64	24 VDC, commoned, single

Field Wiring Diagrams

This figure illustrates how to connect a 64-point digital input module and a 9566–710 to the field.

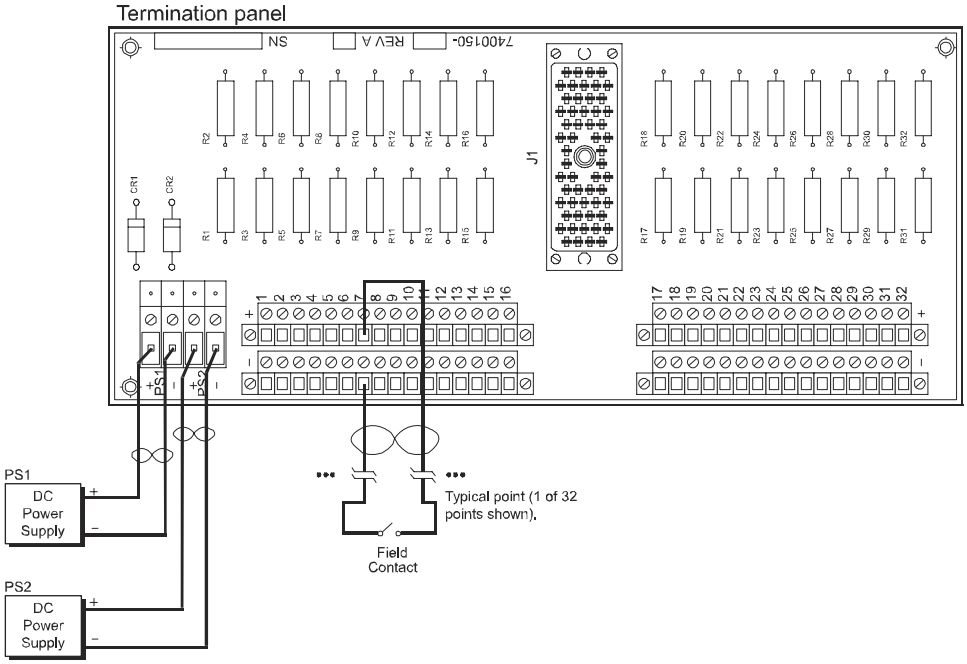

Figure 16 Field Wiring for 9566-710 with a 3564 Module

Simplified Schematics

This is a simplified schematic of a typical 64-point commoned 24 VDC digital input module with a 9566-710 (1 of 64 module points shown).

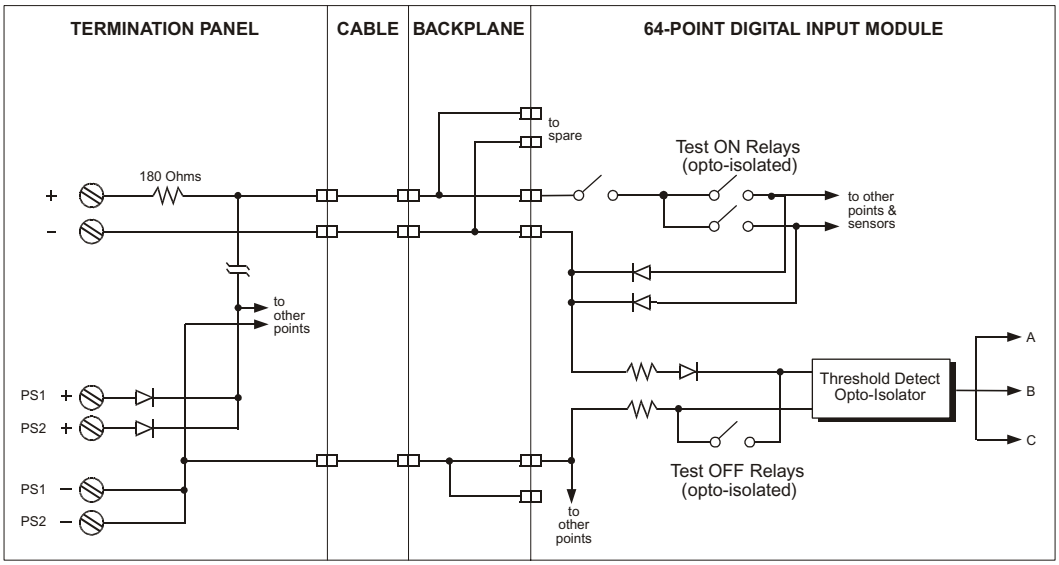

Figure 17 Simplified Schematic of a 3564 DI Module with a 9566-710 Panel

9566-810 (24 VDC, commoned, 32 pts.)

Termination panel 9566–810 is compatible with 24/48 VDC digital input modules and has 32 input points and commoned power terminals (PWR+ and PWR–). Each input point is protected by a 180 ohm current-limiting resistor. You should use term panel 9566-810 in 24 volt applications.

The modules compatible with 9566–810 have 64 points, which means you must use two term panels for each digital input module.

Each term panel comes with two sets of labels: 1-32 and 33-64. For information on how to apply the labels, see Appendix F, Panel Labels.

Specifications

This table describes specifications for 9566–810.

Table 32 Specifications for Term Panel 9566-810

Feature	Description
Panel type	Commoned
Points	32

Compatible Modules

This table describes digital input modules compatible with 9566–810.

Table 33 Modules Compatible with 9566-810

Module Part Number	Points per Module	Module Description
3504E	64	24/48 VDC, commoned, high-density, DC-coupled, TMR

Field Wiring Diagrams

This figure illustrates how to connect a 64-point digital input module and a 9566–810 to the field.

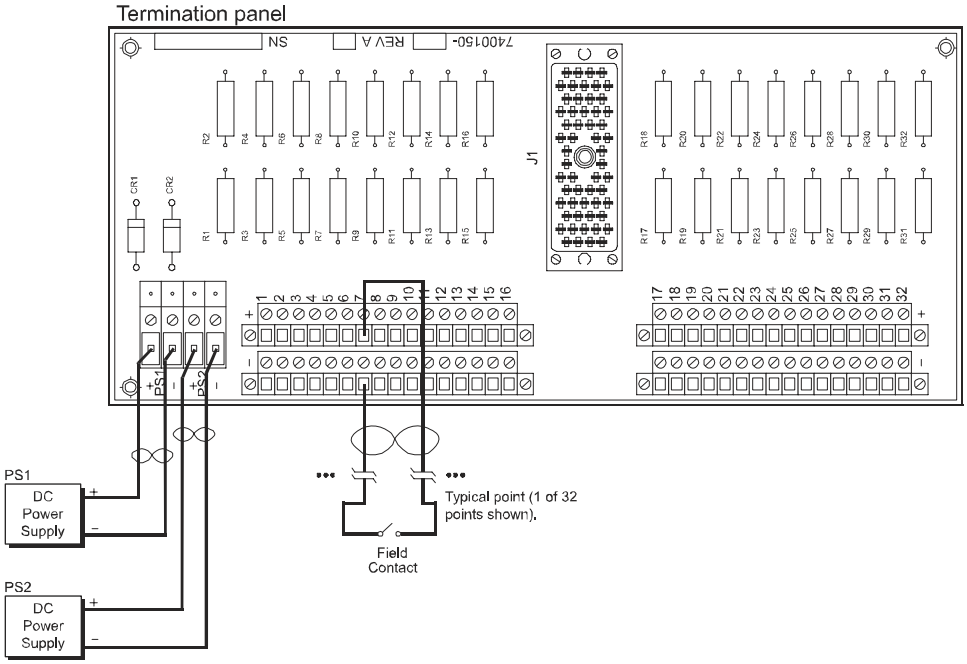

Figure 18 Field Wiring for 9566-810 with a 3504E Module

Simplified Schematics

This is a simplified schematic of a typical 64-point commoned high-density 24 VDC digital input module with a 9566–810 (1 of 64 module points shown).

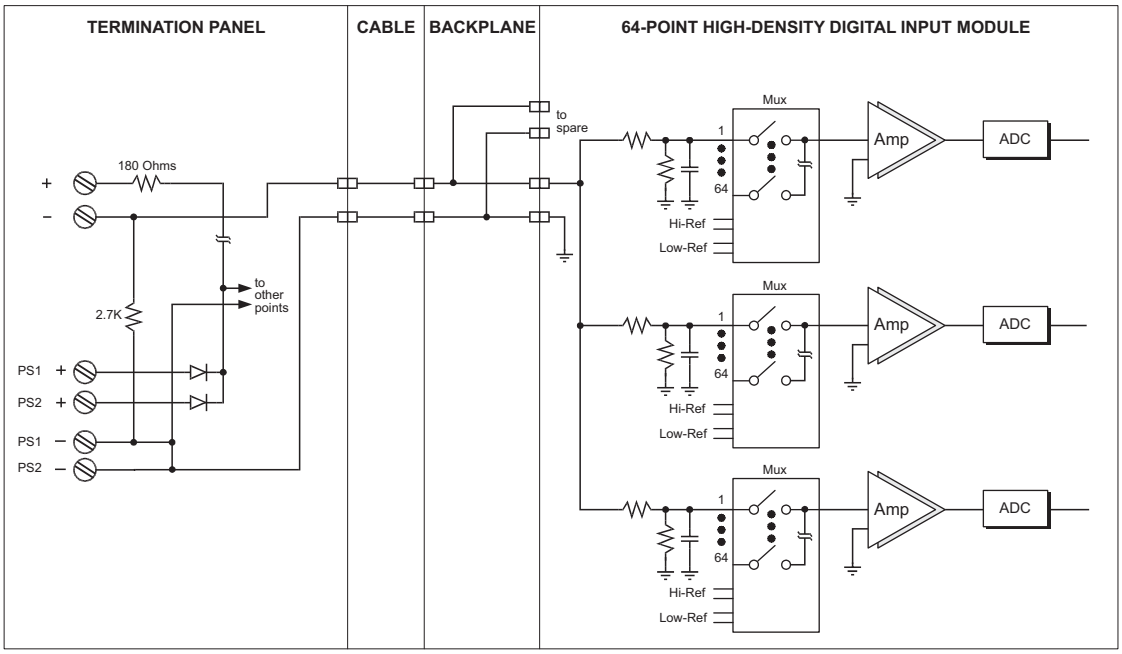

Figure 19 Simplified Schematic of a 3504E DI Module in a 24 V Application with a 9566–810 Panel

16-Point Non-Commoned Digital Input Term Panels

This section describes non-commoned digital input term panels. Model numbers of these term panels are:

- 9561-110 (115 V, non-commoned, 16 pts.)

This figure represents a typical 16-point non-commoned digital input termination panel with fuses and blown-fuse indicators.

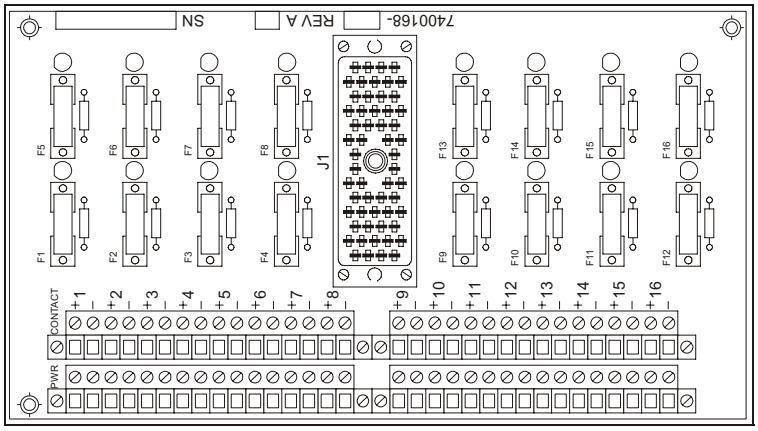

Figure 20 Typical 16-Point Non-Commoned DI Term Panel

9561-110 (115 V, non-commoned, 16 pts.)

Termination panel 9561–110 is compatible with 115 VAC/VDC digital input modules and has 16 input points and 16 power terminals (PWR+ and PWR–). Each input point is protected by a fuse with a blown-fuse indicator.

The modules compatible with 9561–110 have 32 points, which means you must use two term panels for each digital input module.

Each term panel comes with two sets of labels: 1-16 and 17-32. For information on how to apply the labels, see Appendix F, Panel Labels.

Specifications

This table describes specifications for 9561–110.

Table 34 Specifications for Term Panel 9561-110

Feature	Description
Panel type	Non-commoned
Points	16
Leakage current per point	Maximum: 3.3 mA Typical: 2.5 mA

Compatible Modules

This table describes digital input modules compatible with 9561–110.

Table 35 Modules Compatible with 9561-110

Module Part Number	Points per Module	Module Description	Fuse
3501E	32	115 VAC/VDC, non-commoned, isolated, TMR	1A, slow
3501T	32	115 VAC/VDC, non-commoned, isolated, TMR	1A, slow

Field Wiring Diagrams

This figure illustrates how to connect a 32-point digital input module and a 9561–110 to the field.

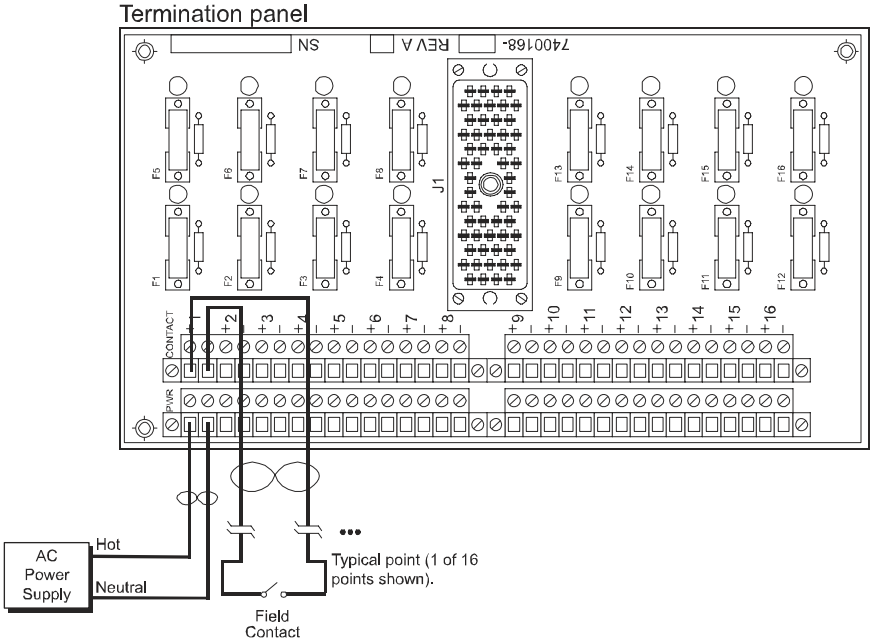

Figure 21 Field Wiring for 9561-110 with a 3501E or 3501T Module

Simplified Schematics

This is a simplified schematic of a typical 32-point non-commoned digital input module with a 9561–110 (1 of 32 module points shown).

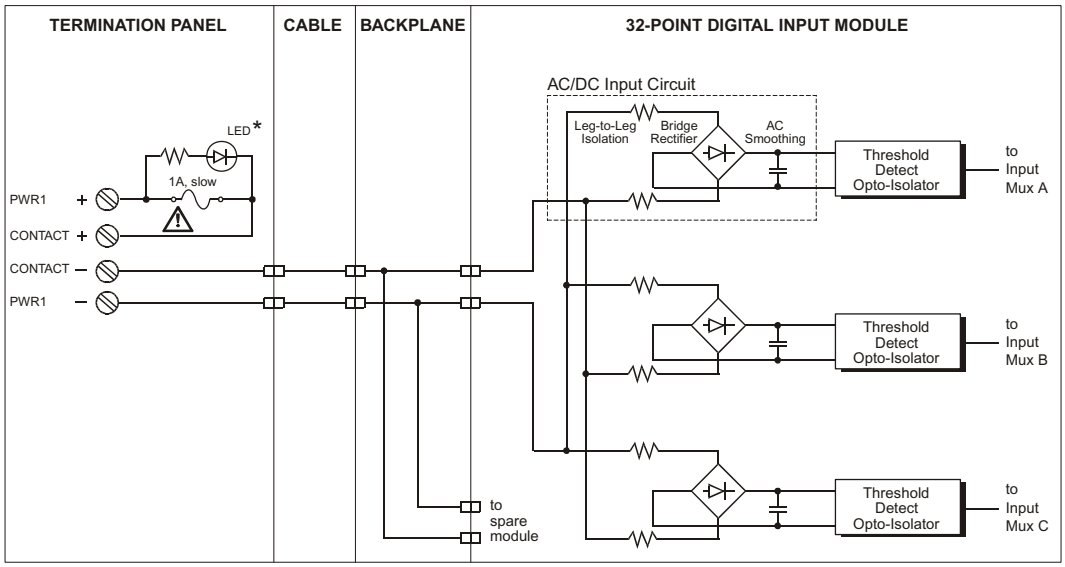

* LEDs are blown-fuse indicators

Figure 22 Simplified Schematic of a 3501E or 3501T DI Module with a 9561–110 Panel

Basic Digital Input Term Panels

This section describes basic digital input term panels, which are available in 16-point and 32-point configurations.

Model numbers of these term panels are:

- 9551-110 (115 V, basic, 16 pts.)
- 9552-610 (48 V, basic, 16 pts.)
- 9553-610 (24 V, basic, 16/32 pts.)
- 9750-310 (24 VDC, basic, 32 pts.)
- 9750-410 (48 VDC, basic, 32 pts.)

This figure represents a typical 16-point or 32-point basic digital input termination panel.

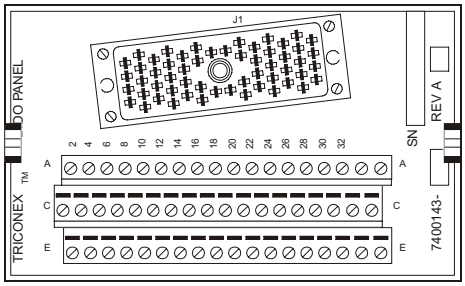

Figure 23 Typical 16-Point/32-Point Basic DI Term Panel

9551-110 (115 V, basic, 16 pts.)

Termination panel 9551–110 is compatible with 115 VAC/VDC digital input modules and has 16 input points.

The modules compatible with 9551–110 have 32 points, which means you must use two term panels for each digital input module.

Specifications

This table describes specifications for 9551–110.

Table 36 Specifications for Term Panel 9551-110

Feature	Description
Panel type	Basic
Points	16

Compatible Modules

This table describes digital input modules compatible with 9551–110.

Table 37 Modules Compatible with 9551-110

Module Part Number	Points per Module	Module Description
3501E	32	115 VAC/VDC, non-commoned, isolated, TMR
3501T	32	115 VAC/VDC, non-commoned, isolated, TMR

Field Wiring Diagrams

This figure illustrates how to connect a 32-point digital input module and a 9551–110 to the field.

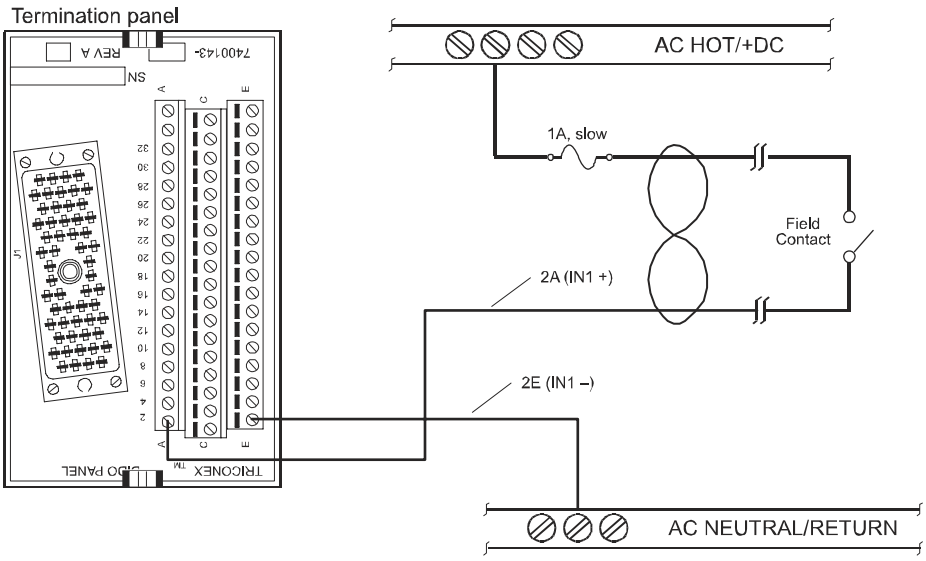

Figure 24 Field Wiring for 9551-110 with a 3501E or 3501T Module

Simplified Schematics

This is a simplified schematic of a typical 32-point digital input module without self-test and a 9551–110 (1 of 32 module points shown).

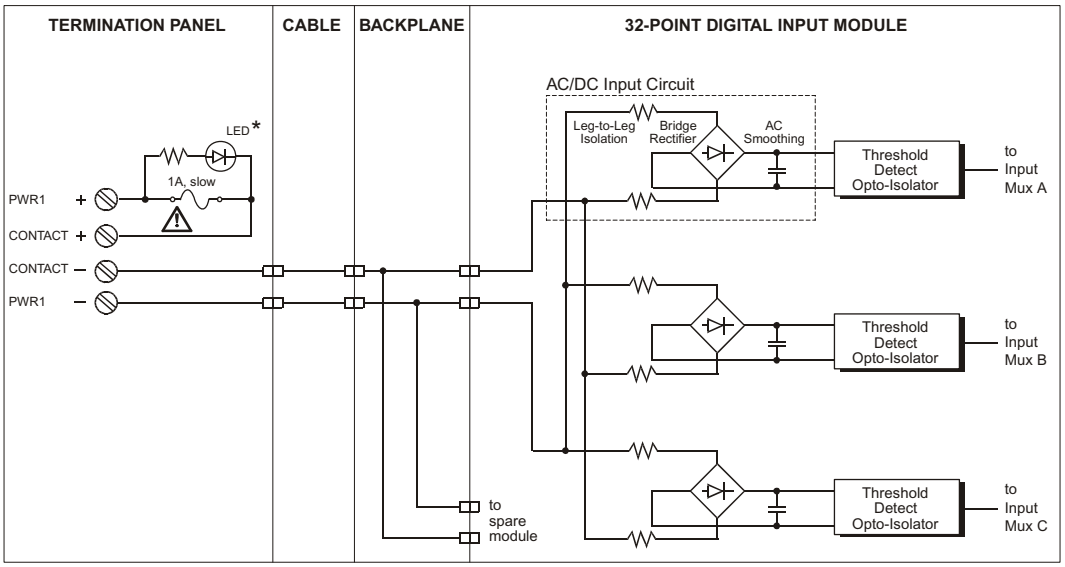

Figure 25 Simplified Schematic of a 3501E or 3501T DI Module with a 9551-110 Panel

9552-610 (48 V, basic, 16 pts.)

Termination panel 9552–610 is compatible with 48 VAC/VDC digital input modules and has 16 input points.

The modules compatible with 9552–610 have 32 points, which means you must use two term panels for each digital input module.

Specifications

This table describes specifications for 9552–610.

Table 38 Specifications for Term Panel 9552-610

Feature	Description
Panel type	Basic
Points	16

Compatible Modules

This table describes digital input modules compatible with 9552–610.

Table 39 Modules Compatible with 9552-610

Module Part Number	Points per Module	Module Description
3502E	32	48 VAC/VDC, commoned in groups of 8 with self test, TMR

Field Wiring Diagrams

This figure illustrates how to connect a 32-point digital input module and a 9552–610 to the field.

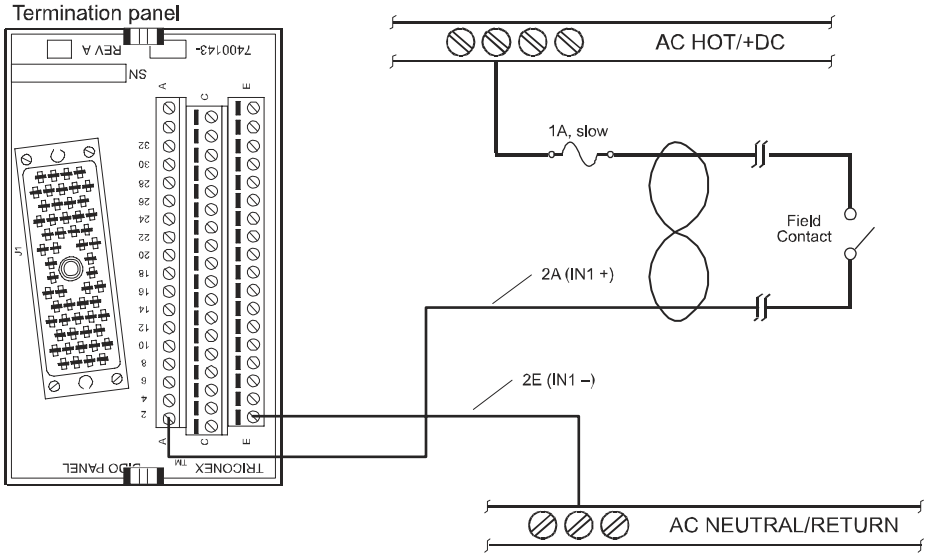

Figure 26 Field Wiring for 9552-610 with a 3502E Module

Simplified Schematics

This is a simplified schematic of a typical 32-point digital input module with self-test and a 9552–610 (1 of 32 module points shown).

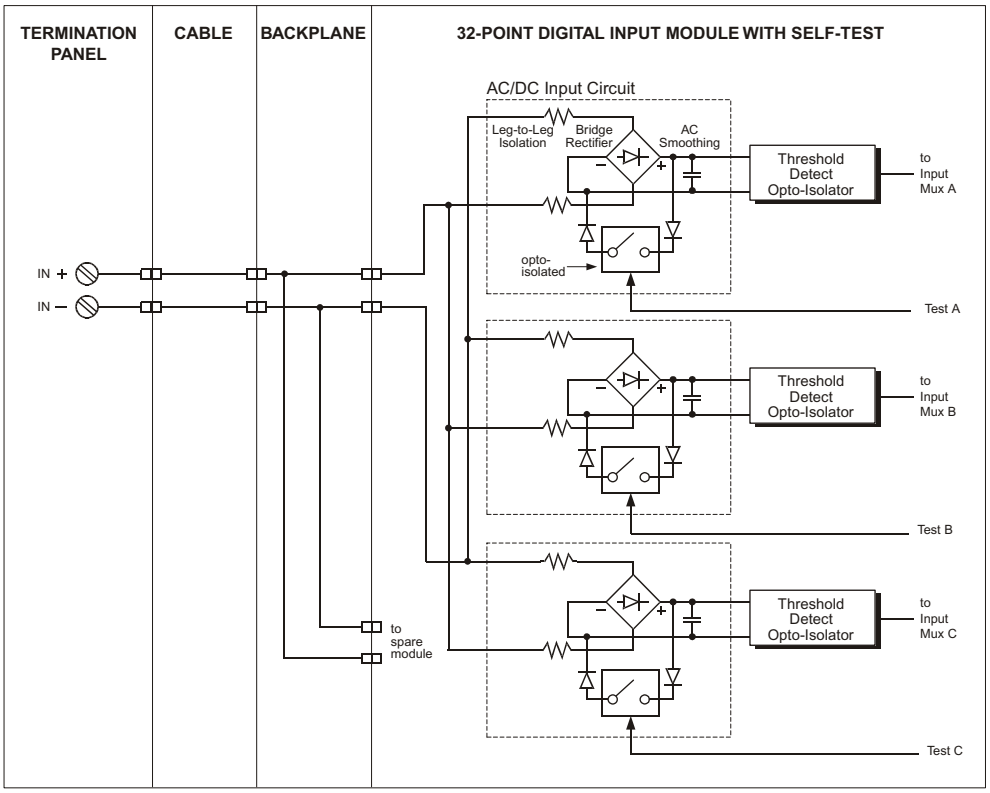

Figure 27 Simplified Schematic of a 3502E DI Module with a 9552-610 Panel

9553-610 (24 V, basic, 16/32 pts.)

Termination panel 9553–610 is compatible with 24 VAC/VDC and 24 VDC digital input modules and has 16 input points when used with 32-point modules and 32 input points when used with 64-point modules.

You must use two term panels for each digital input module.

Specifications

This table describes specifications for 9553–610.

Table 40 Specifications for Term Panel 9553-610

Feature	Description
Panel type	Basic
Points	16 when used with 32-point modules 32 when used with 64-point modules

Compatible Modules

This table describes digital input modules compatible with 9553–610.

Table 41 Modules Compatible with 9553-610

Module Part Number	Points per Module	Module Description
3503E	32	24 VAC/VDC, commoned in groups of 8 with self test, TMR
3505E	32	24 VDC, low-threshold, commoned in groups of 8, TMR
3564	64	24 VDC, commoned, single

Field Wiring Diagrams

This figure illustrates how to connect a 32-point digital input module and a 9553–610 to the field.

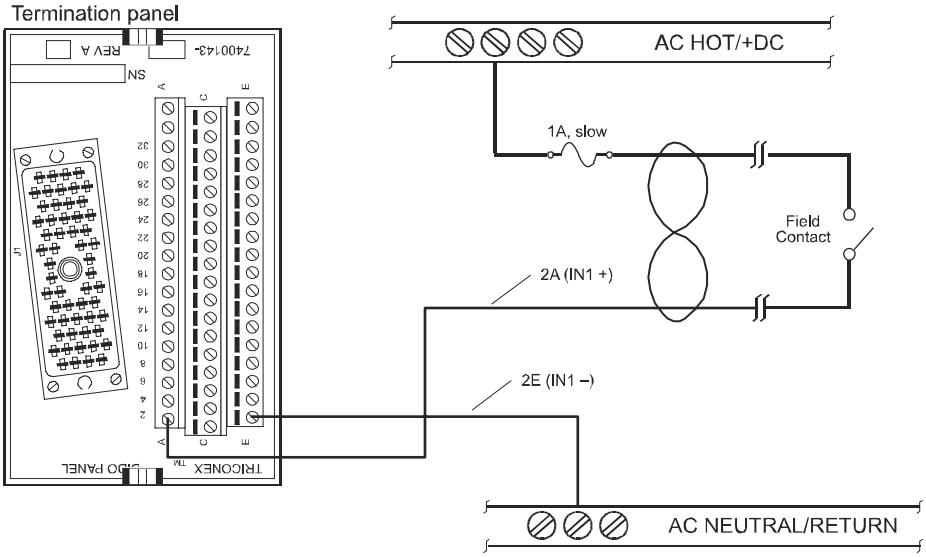

Figure 28 Field Wiring for 9553-610 with a 3503E or 3505E Module

This figure illustrates how to connect a 64-point digital input module and a 9553–610 without commoned return to the field.

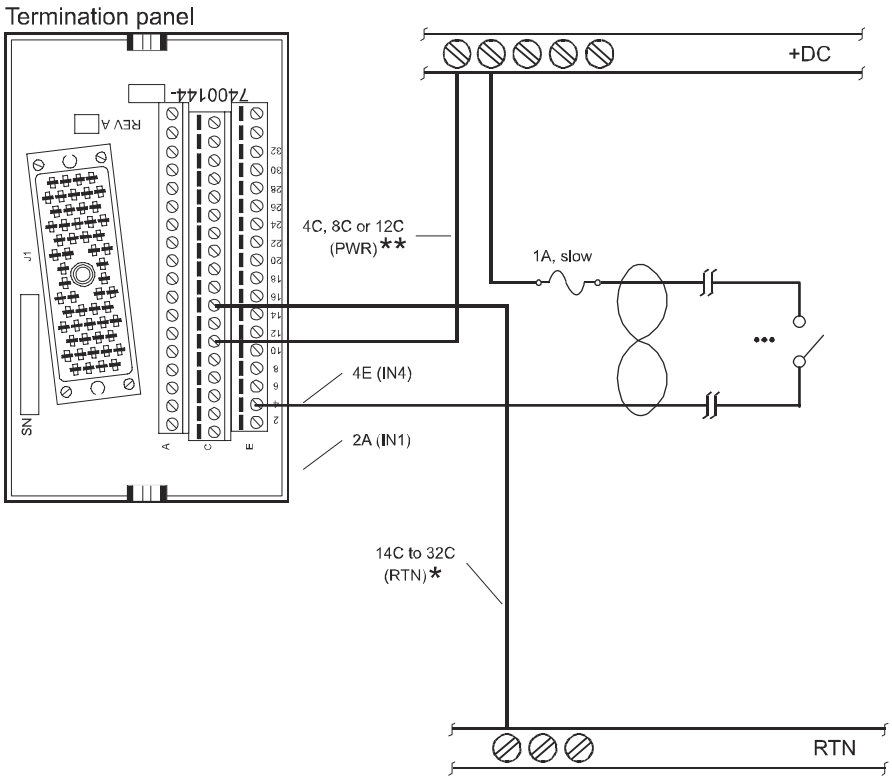

* One RTN connection is required. More than one is okay.

** One PWR connection is required. More than one is okay.

Figure 29 Field Wiring for 9553-610 with a 3564 Module

Simplified Schematics

This is a simplified schematic of a typical 32-point digital input module with self-test and a 9553–610 (1 of 32 module points shown).

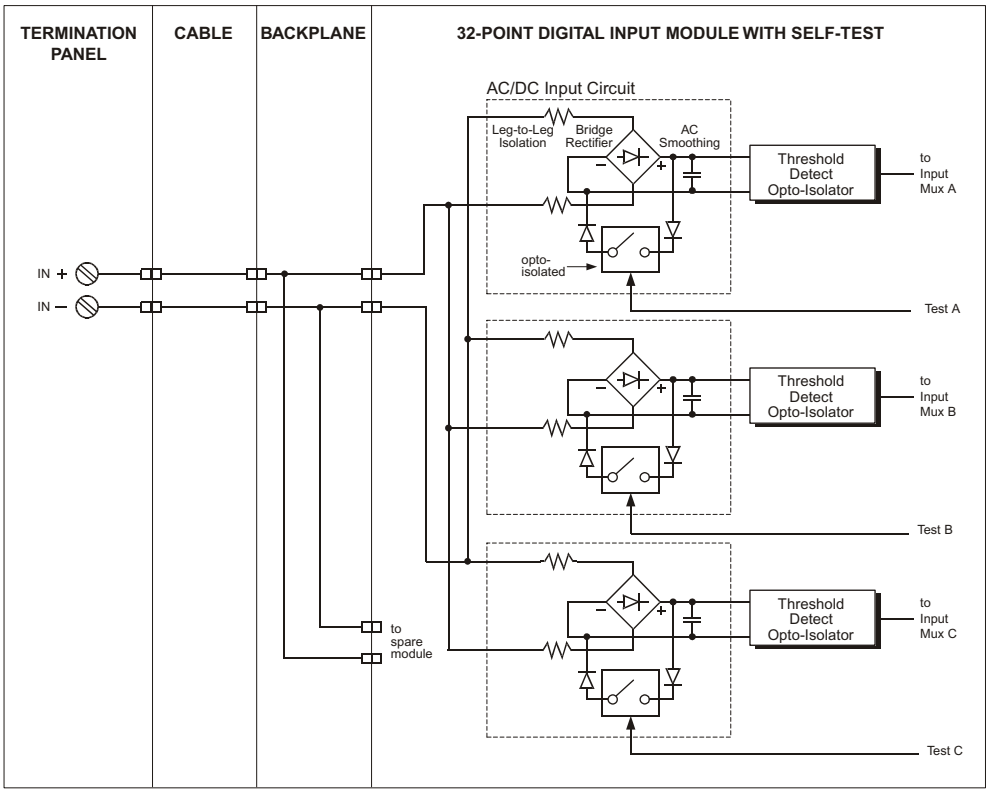

Figure 30 Simplified Schematic of a 3503E or 3505E DI Module with a 9553-610 Panel

This is a simplified schematic of a typical 64-point commoned digital input module and a 9553–610 (1 of 32 module points shown).

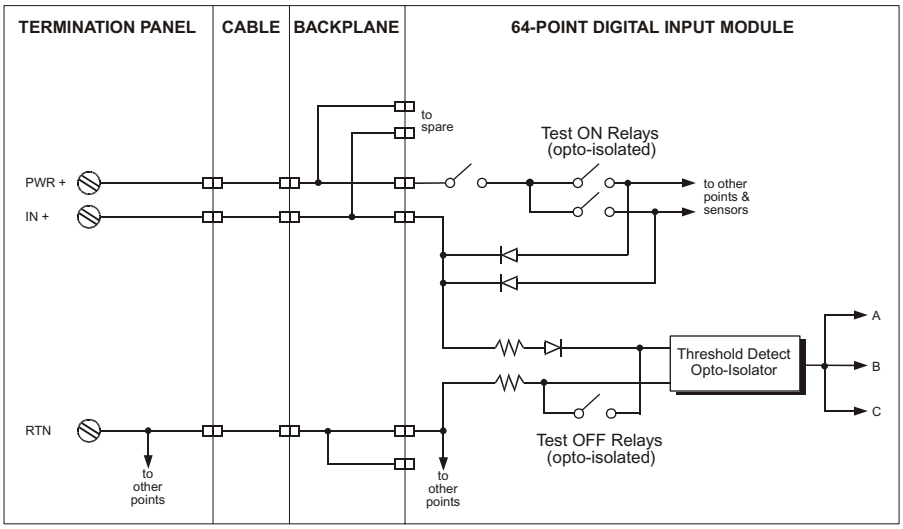

Figure 31 Simplified Schematic of a 3564 DI Module with a 9553-610 Panel

9750-310 (24 VDC, basic, 32 pts.)

Termination panel 9750–310 is compatible with 24/48 VDC digital input modules and has 32 input points.

The modules compatible with 9750–310 have 64 points, which means you must use two term panels for each digital input module.

Specifications

This table describes specifications for 9750–310.

Table 42 Specifications for Term Panel 9750-310

Feature	Description
Panel type	Basic
Points	32

Compatible Modules

This table describes digital input modules compatible with 9750–310.

Table 43 Modules Compatible with 9750-310

Module Part Number	Points per Module	Module Description
3504E	64	24/48 VDC, commoned, high-density, DC-coupled, TMR, configured as 24 VDC when used with 9750-310

Field Wiring Diagrams

This figure illustrates how to connect a 64-point digital input module and a 9750–310 to the field.

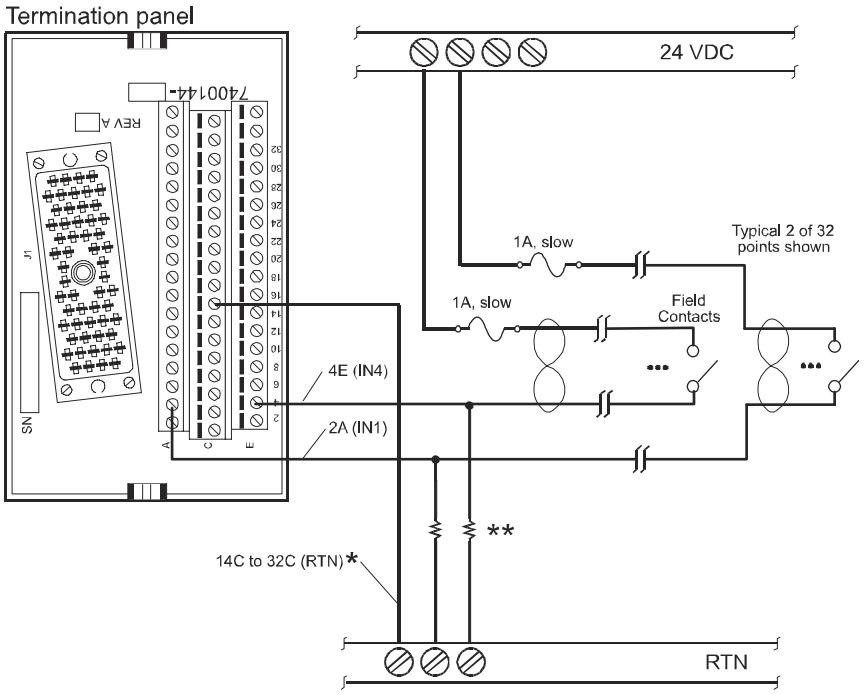

* One RTN connection is required. More than one is okay.

** Optional ballast resistor.

Figure 32 Field Wiring for 9750-310 with a 3504E DI Module

Simplified Schematics

This is a simplified schematic of a typical 64-point commoned 24/48 VDC high-density DC-coupled digital input module with a 9750–310 (1 of 32 module points shown).

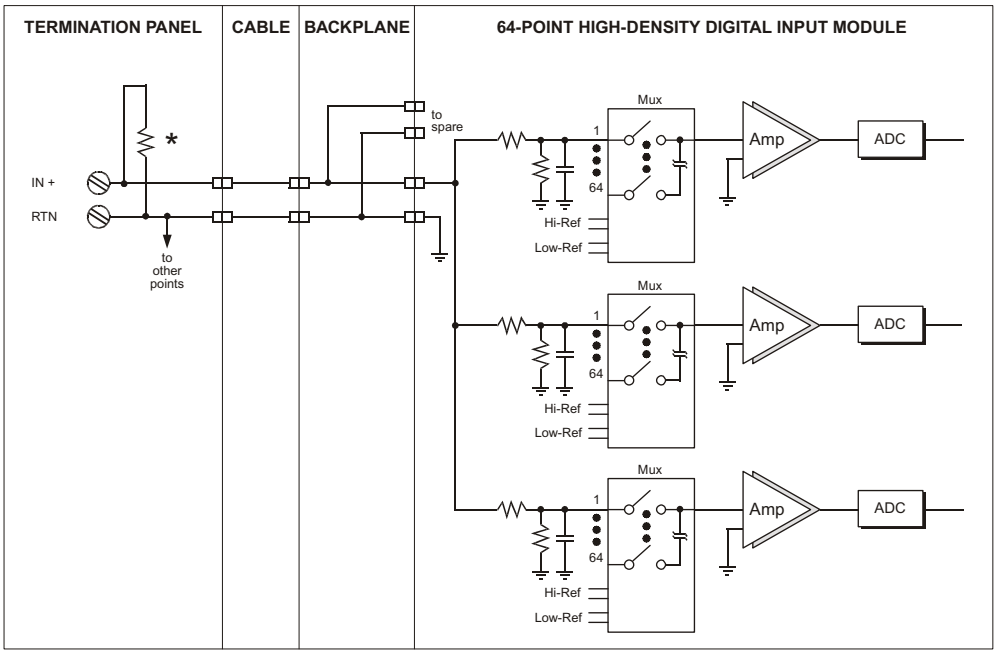

* For maximum noise immunity, install a 1W, 2.7k ohms ballast resistor.

Figure 33 Simplified Schematic of a 3504E DI Module with a 9750-310 Panel

9750-410 (48 VDC, basic, 32 pts.)

Termination panel 9750–410 is compatible with 24/48 VDC digital input modules and has 32 input points.

The modules compatible with 9750–410 have 64 points, which means you must use two term panels for each digital input module.

Specifications

This table describes specifications for 9750–410.

Table 44 Specifications for Term Panel 9750-410

Feature	Description
Panel type	Basic
Points	32

Compatible Modules

This table describes digital input modules compatible with 9750–410.

Table 45 Modules Compatible with 9750-410

Module Part Number	Points per Module	Module Description
3504E	64	24/48 VDC, commoned, high-density, DC-coupled, TMR, configured as 48 VDC when used with 9750-410

Field Wiring Diagrams

This figure illustrates how to connect a 64-point digital input module and a 9750–410 to the field.

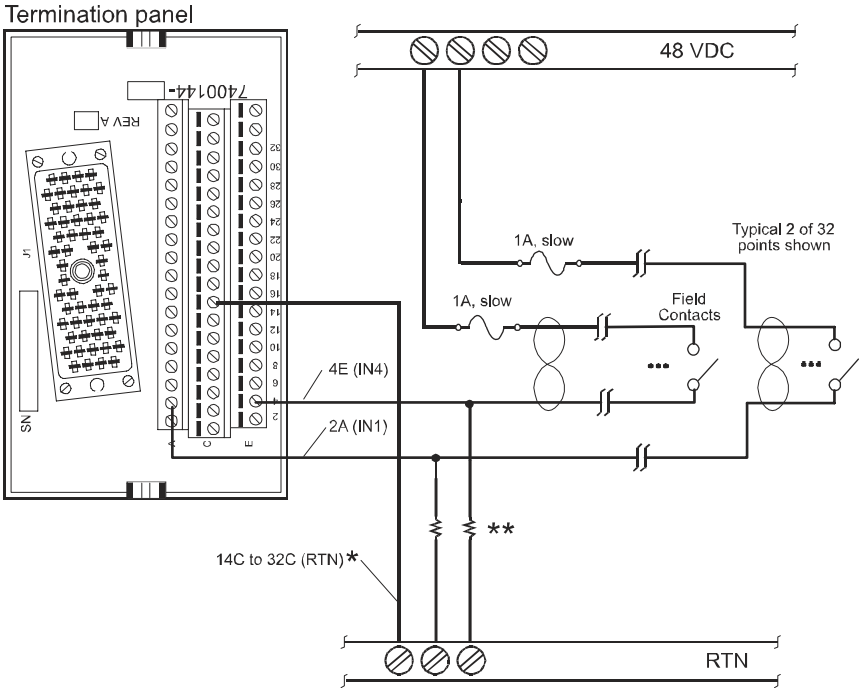

Figure 34 Field Wiring for 9750-410 with a 3504E DI Module

Simplified Schematics

This is a simplified schematic of a typical 64-point commoned 24/48 VDC high-density DC-coupled digital input module with a 9750–410 (1 of 32 module points shown).

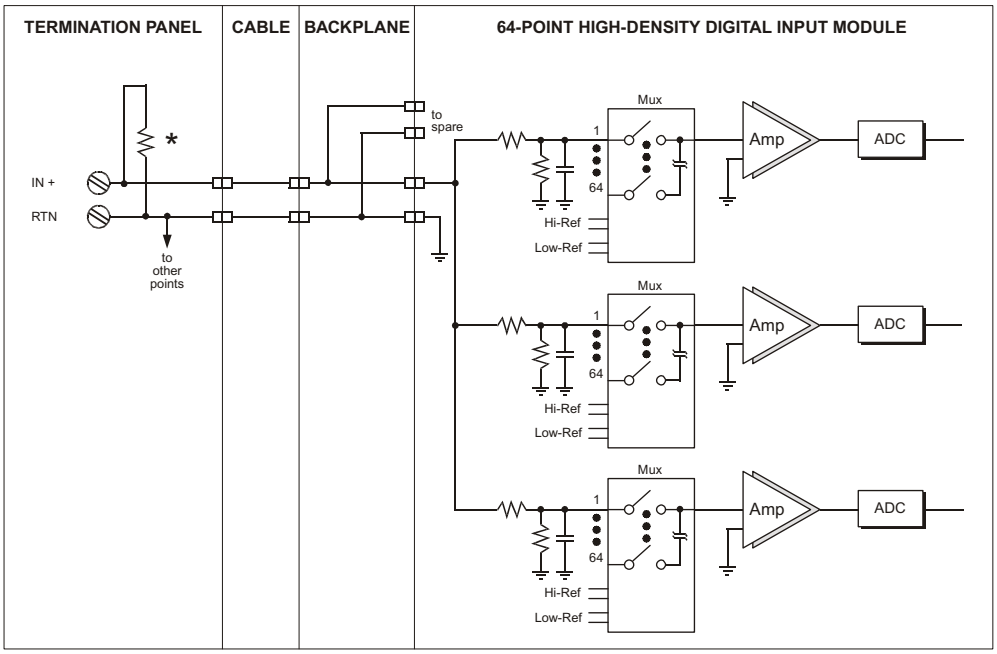

* For maximum noise immunity, install a 1W, 10k ohms ballast resistor.

Figure 35 Simplified Schematic of a 3504E DI Module with a 9750–410 Panel

Pulse Input and Pulse Totalizer Input Term Panels

This section describes pulse input and pulse totalizer input term panels.

Model numbers of these term panels are:

- 9753-110 (8 PI pts./16 PTI pts.)

This figure represents a typical 8-point pulse input or 16-point pulse totalizer input termination panel.

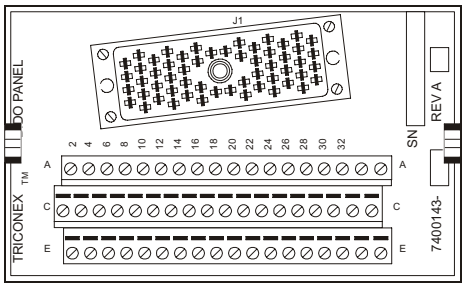

Figure 36 Typical 8-Point Pulse Input or 16-Point Pulse Totalizer Input Term Panel

9753-110 (8 PI pts./16 PTI pts.)

Termination panel 9753–110 is compatible with pulse input modules and pulse totalizer input modules.

When used with pulse input modules, 9753-110 has 8 differential-input signal terminals (IN+ and IN–).

When used with pulse totalizer input modules, 9753-110 has 16 input signal terminals (IN+ and IN–). The pulse totalizer input modules compatible with 9753–110 have 32 points, which means you must use two term panels for each pulse totalizer input module.

Specifications

This table describes specifications for 9753–110.

Table 46 Specifications for Term Panel 9753-110

Feature	Description
Panel type	Basic
Points	8 when used with pulse input modules 16 when used with pulse totalizer input modules

Compatible Modules

This table describes pulse input and pulse totalizer input modules compatible with 9753–110.

Table 47 Modules Compatible with 9753-110

Module Part Number	Points per Module	Module Description
3510	8	20 Hz to 20 KHz pulse input, non-commoned, AC-coupled, 50 ms typical input update rate
3511	8	20 Hz to 20 KHz pulse input, non-commoned, AC-coupled, 25 ms typical input update rate
3515	32	0 to 1 kHz pulse totalizer input, non-commoned

Field Wiring Diagrams

This figure illustrates how to connect an 8-point pulse input module and a 9753–110 to the field.

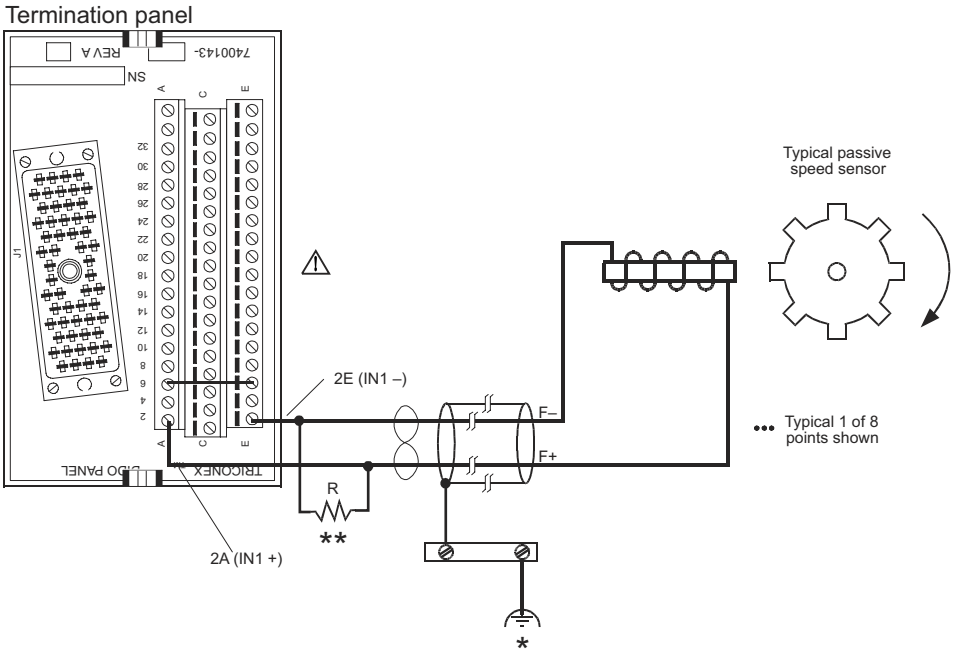

* Functional earth ground (quiet ground) is recommended for shield connections. For shield grounding instructions, see Appendix E.

** When possible, install a terminating resistor as shown. For further information, see Technical Application Note (TAN) #006.

Figure 37 Field Wiring for 9753-110 with a 3510 or 3511 PI Module

CAUTION Unused points must be shorted together.

This figure illustrates how to connect a 32-point pulse totalizer input module and a 9753-110 to the field.

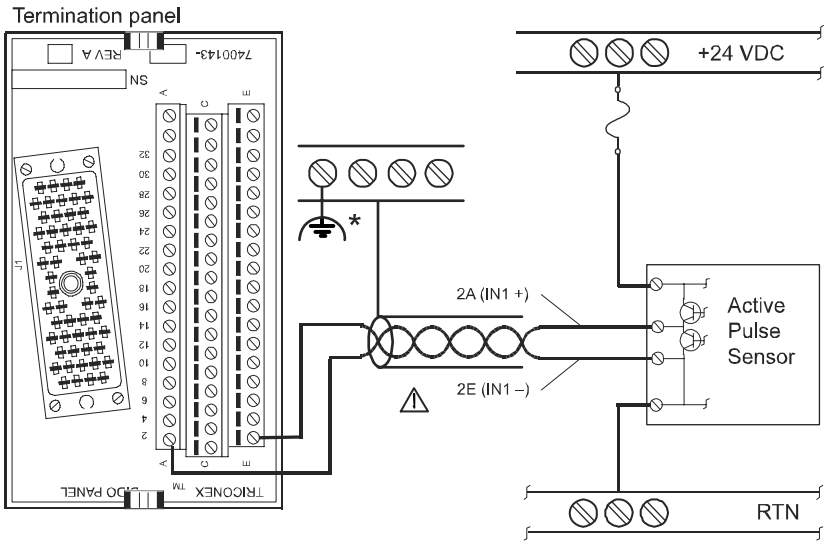

Figure 38 Field Wiring for 9753-110 with a 3515 Pulse Totalizer Input Module

CAUTION

With the 3515 pulse totalizer input module, sensor pulse outputs should be the push-pull type. You may use high-side or low-side, solid-state output, but maximum frequency may be reduced based on cable distance. Do not use mechanical relay/switch contacts. To prevent point-to-point cross-talk, use individually shielded, twisted-pair wire for lengths greater than 50 feet (15 meters).

Simplified Schematics

This is a simplified schematic of a typical 8-point non-commoned pulse input module with a 9753–110 (1 of 8 module points shown).

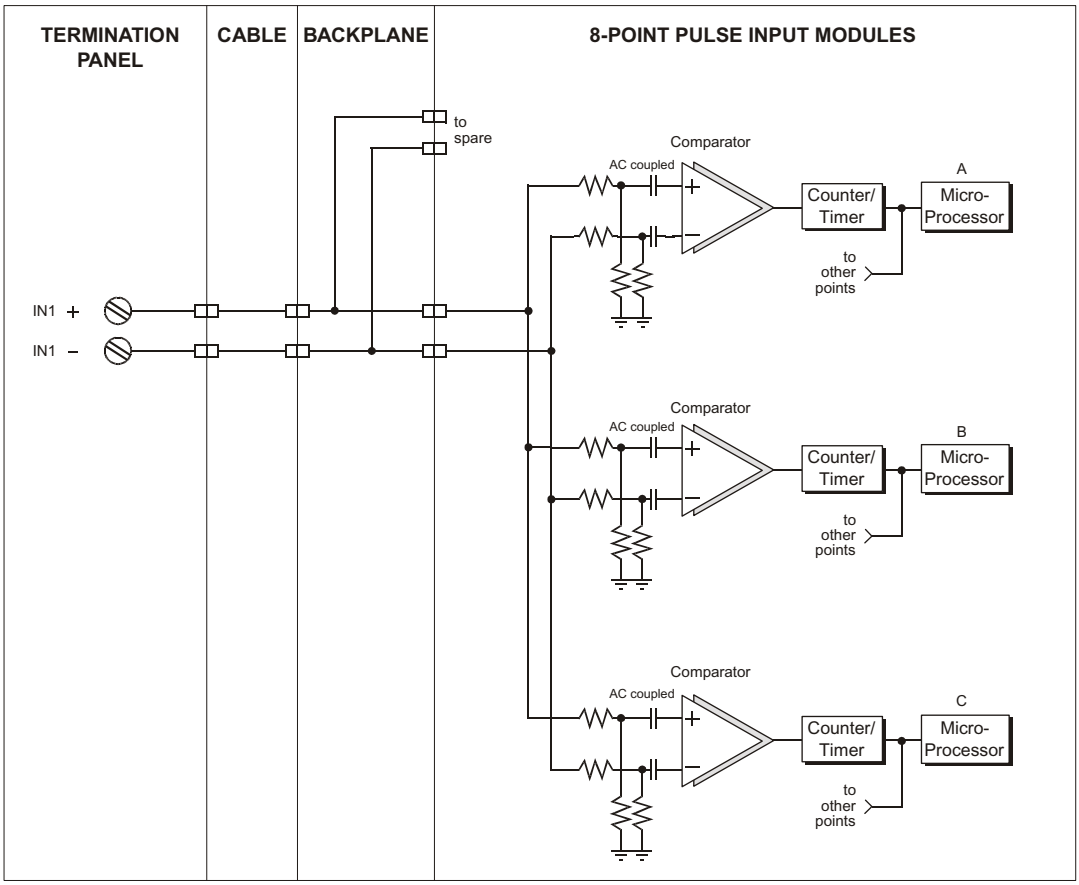

Figure 39 Simplified Schematic of a 3510 or 3511 PI Module with a 9753–110 Panel

This is a simplified schematic of a typical 32-point non-commoned pulse totalizer input module with a 9753–110 (1 of 32 module points shown).

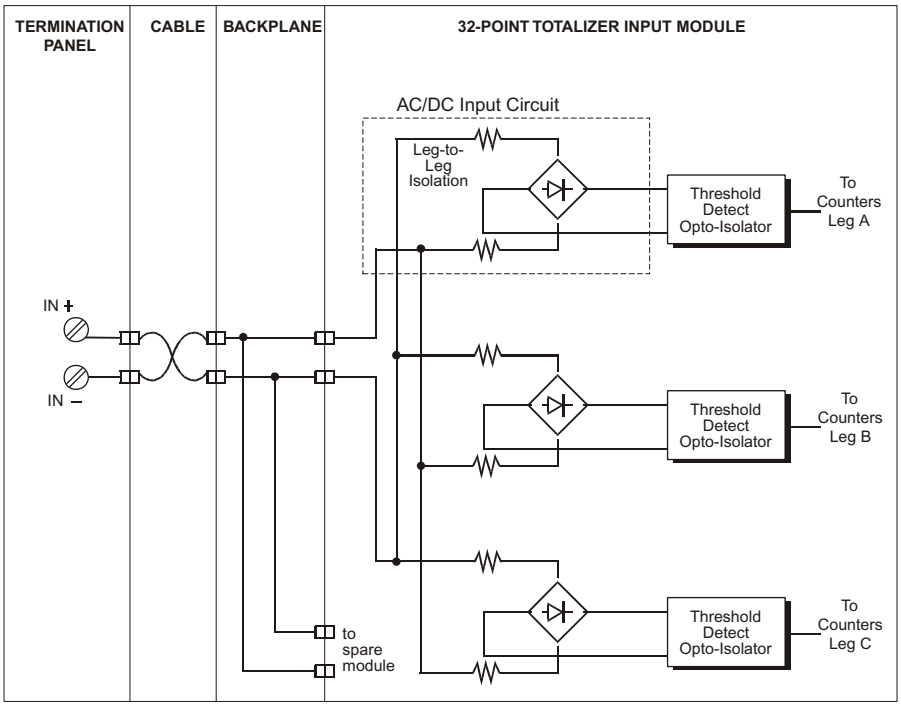

Figure 40 Simplified Schematic of a 3515 Pule Totalizer Input Module with a 9753–110 Panel

Bypass Term Panels

This section describes bypass term panels, which are available for 32-point and 64-point digital input modules.

Model numbers of these term panels are:

- BP9228-010 (24 V, bypass, 32 pts., for 32 pt. modules)
- BP9229-010 (24 V, bypass, 32 pts., for 64 pt. modules)

This figure represents a typical 32-point bypass termination panel that is compatible with 32-point digital input modules.

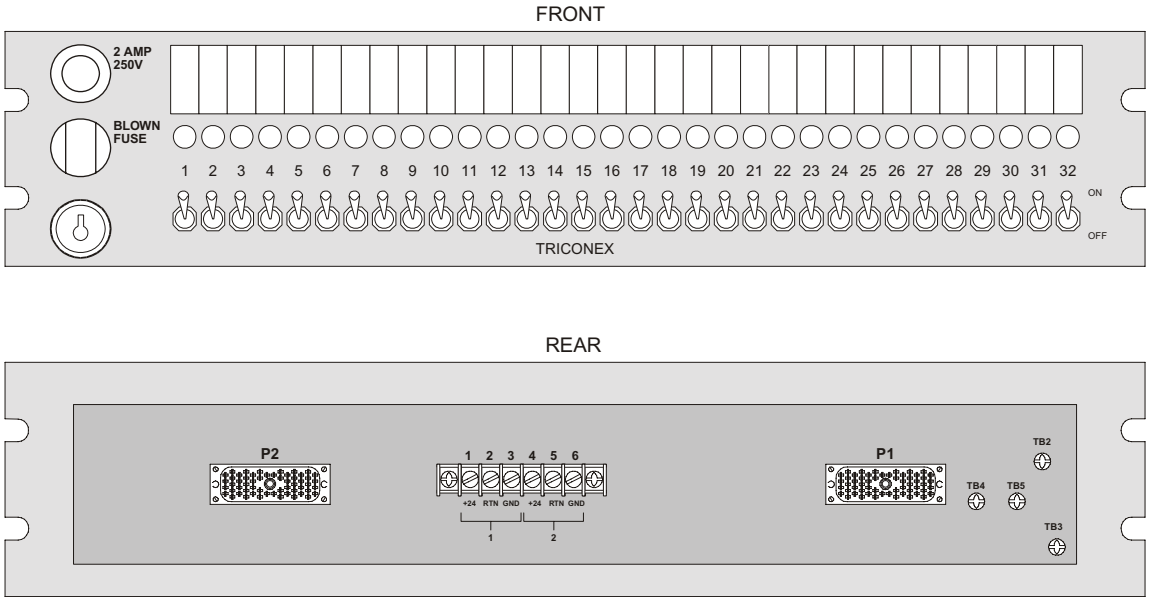

Figure 41 Typical 32-Point Bypass Term Panel for 32-Point DI Modules

This figure represents a typical 32-point bypass termination panel that is compatible with 64-point digital input modules.

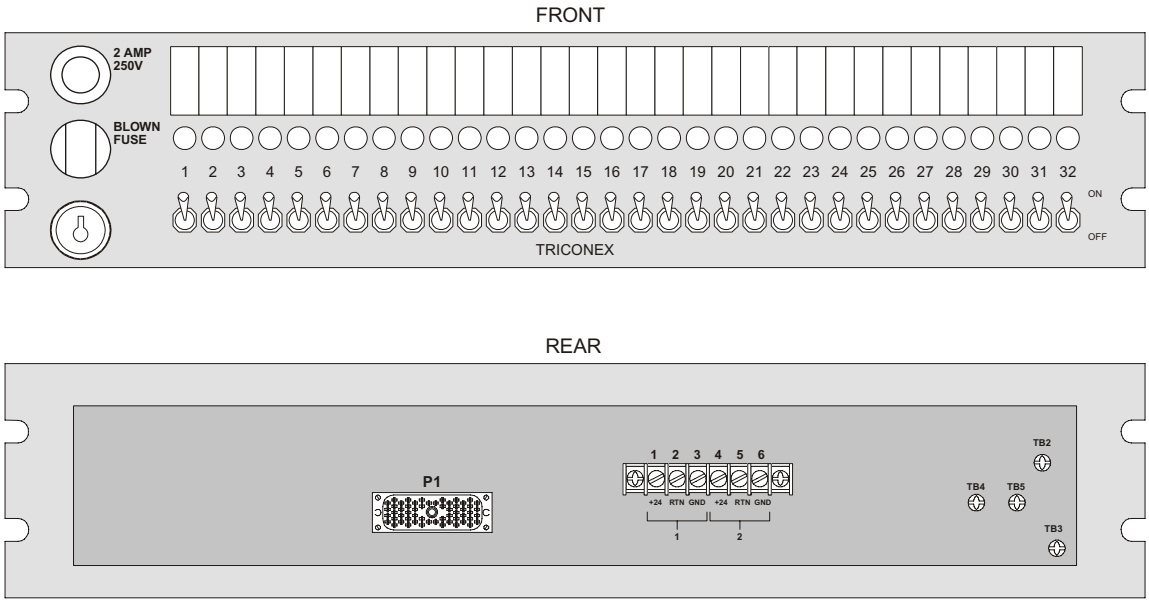

Figure 42 Typical 32-Point Bypass Term Panel for 64-Point DI Modules

For more description of bypass termination panels, see Bypass Panel for Digital Inputs on page 5.

BP9228-010 (24 V, bypass, 32 pts., for 32 pt. modules)

Termination panel BP9228-010 is compatible with 24 VAC/VDC and 24 VDC digital input modules, has 32 input points, and is supplied with two interface cables.

The panel is 3.5 inches high, 4.0 inches deep, and 19 inches wide (88.9 mm x 101.6 mm x 482.5 mm) and complies with EIA Standard RS-310-C. Each cable is keyed to the appropriate digital input module. P1 connects points 1-16, and P2 connects points 17-32. A 6-terminal barrier strip has terminals for redundant 24 VDC power with diode ORing provided on the panel. Each screw terminal accepts either #6 ring-lug terminals, or 24-gauge to 12-gauge (0.2 mm2 to 3.3 mm2) wires.

Specifications

This table describes specifications for BP9228-010.

Table 48 Specifications for Term Panel BP9228-010

Feature	Description
Panel type	Bypass
Points	32

Compatible Modules

This table describes digital input modules compatible with BP9228-010.

Table 49 Modules Compatible with BP9228-010

Module Part Number	Points per Module	Module Description
3503E	32	24 VAC/VDC, commoned in groups of 8 with self-test
3505E	32	24 VDC, low-threshold, commoned in groups of 8 with self-test

Field Wiring Diagrams

This figure illustrates how to connect a 32-point digital input module and a BP9228-010.

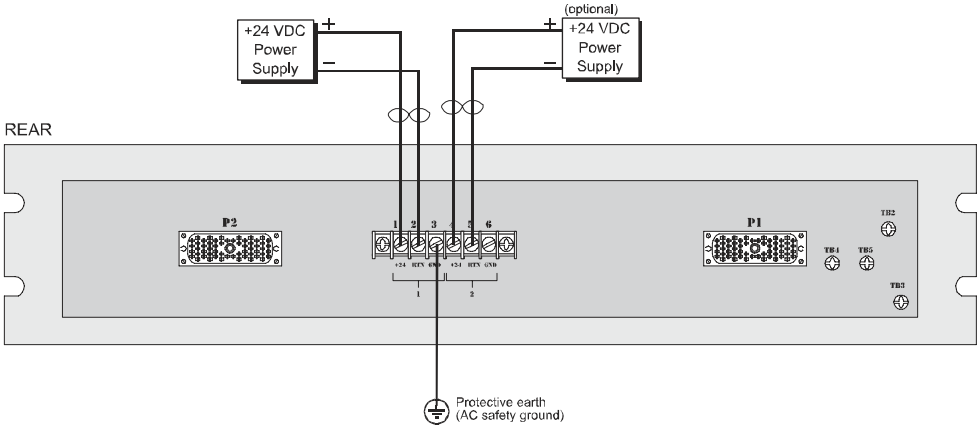

Figure 43 Field Wiring for BP9228-010 with a 3503E or 3505E DI Module

Simplified Schematics

This is a simplified schematic of a typical 32-point digital input module with a BP9228-010 (1 of 32 module points shown).

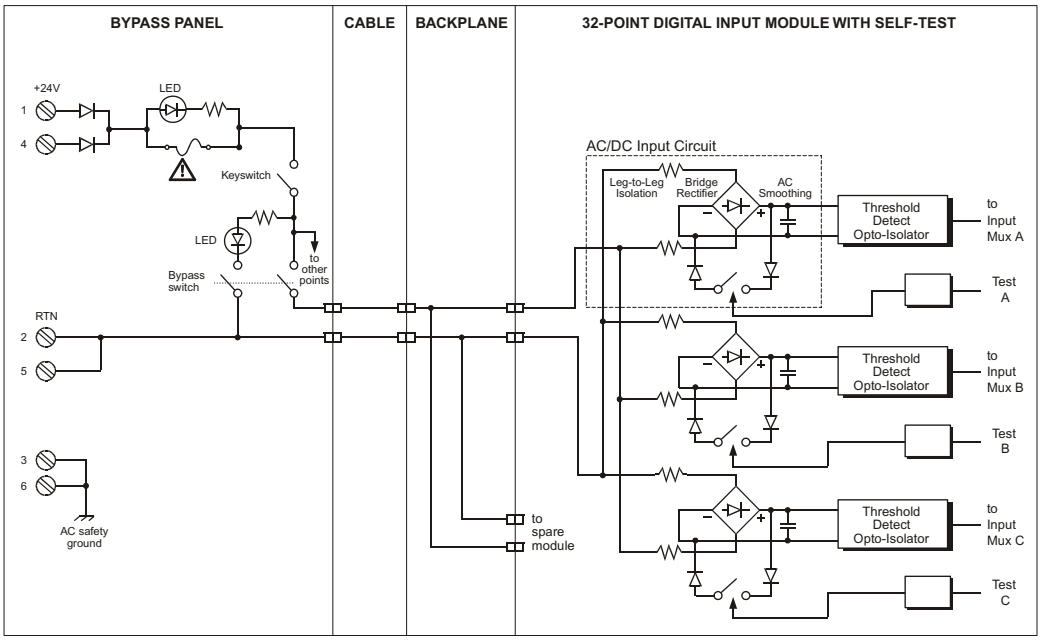

Figure 44 Simplified Schematic of a 3503E or 3505E DI Module with a BP9228-010 Panel

BP9229-010 (24 V, bypass, 32 pts., for 64 pt. modules)

Termination panel BP9229-010 is compatible with 24 VDC digital input modules and has 32 input points.

The panel is 3.5 inches high, 4.0 inches deep, and 19 inches wide (88.9 mm x 101.6 mm x 482.5 mm), and complies with EIA Standard RS-310-C. The cable is keyed to the appropriate digital input module. P1 connects points 1-32. A 6-terminal barrier strip has terminals for redundant 24 VDC power with diode ORing provided on the panel. Each screw terminal accepts either #6 ring-lug terminals, or 24-gauge to 12-gauge (0.2 mm2 to 3.3 mm2) wires.

The modules compatible with BP9229-010 have 64 points, which means you must use two term panels for each digital input module.

Specifications

This table describes specifications for BP9229-010.

Table 50 Specifications for Term Panel BP9229-010

Feature	Description
Panel type	Bypass
Points	32

Compatible Modules

This table describes digital input modules compatible with BP9229-010.

Table 51 Modules Compatible with BP9229-010

Module Part Number	Points per Module	Module Description
3504E	64	24 VDC, commoned

Field Wiring Diagrams

This figure illustrates how to connect a 64-point digital input module and a BP9229-010.

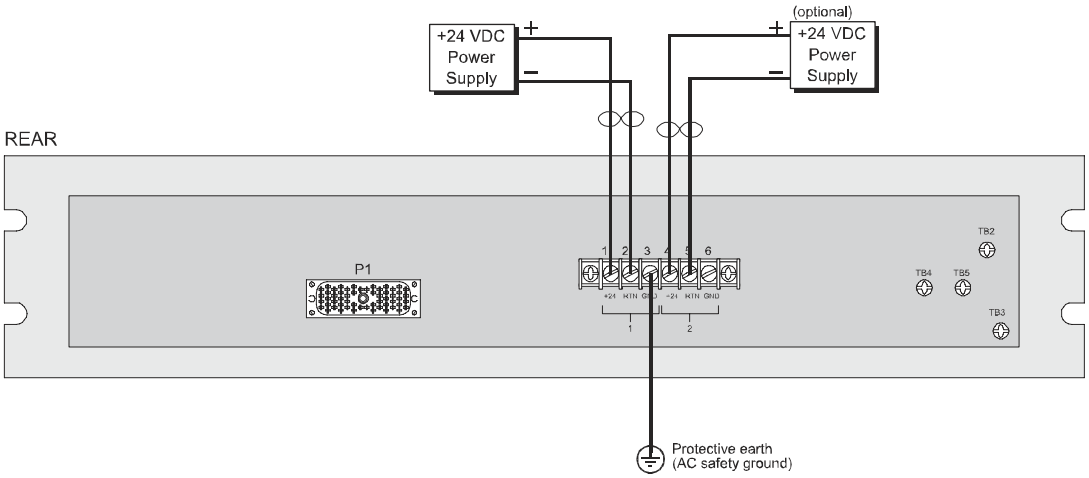

Figure 45 Field Wiring for BP9229-010 with a 3504E DI Module

Simplified Schematics

This is a simplified schematic of a typical 64-point digital input module with a BP9229-010 (1 of 32 module points shown).

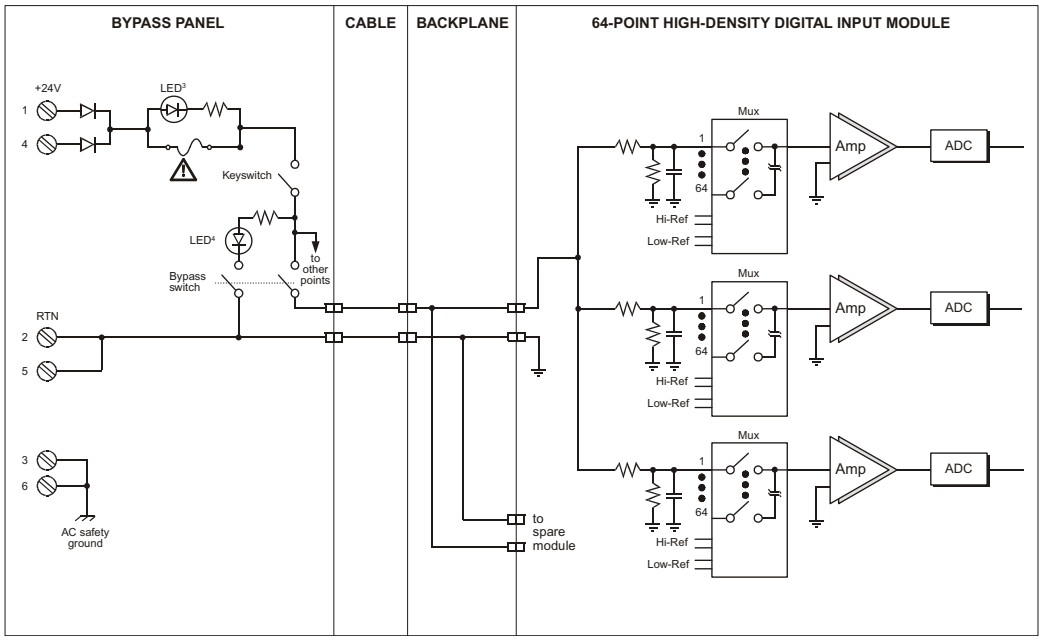

Figure 46 Simplified Schematic of a 3504E DI Module with a BP9229-010 Panel

4

Digital Output Termination Panels

Overview 82

8-Point Commoned Digital Output Term Panels 83

16-Point Commoned Digital Output Term Panels 99

16-Point Non-Commoned Digital Output Term Panels 121

Basic Digital Output Term Panels 135

Commoned Interposing Relay Term Panels 150

Non-Commoned Interposing Relay Term Panels 164

Overview

This chapter describes external field termination panels you can use with digital output modules. Digital output termination panels are available in these configurations:

- 8-point commoned
- 16-point commoned
- Non-commoned
- Basic
- Commoned interposing relay
- Non-commoned interposing relay

8-Point Commoned Digital Output Term Panels

This section describes 8-point commoned digital output term panels, which are available in AC versions or DC versions. Model numbers of these term panels are:

- 9661-510 (115 VAC, commoned, 8 pts.)
- 9661-810 (120 VDC, commoned, 8 pts.)
- 9662-710 (24 VDC low-power, commoned, 8 pts.)
- 9662-910 (24 VDC, commoned, 8 pts.)
- 9667-910 (48 VDC, commoned, 8 pts.)

This figure represents a typical 8-point commoned AC digital output termination panel with fuses and blown-fuse indicators.

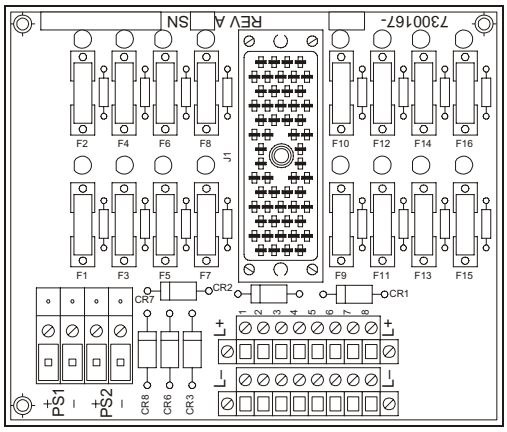

Figure 47 Typical 8-Point Commoned AC DO Term Panel

This figure represents a typical 8-point commoned DC digital output termination panel with fuses and blown-fuse indicators.

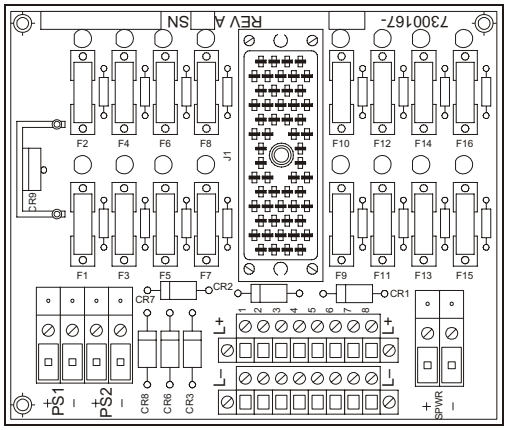

Figure 48 Typical 8-Point Commoned DC DO Term Panel

This table identifies primary and secondary fuse locations for each output point on an 8-point commoned digital output term panel.

Table 52 Fuse Identification for 8-Point Commoned DO Term Panels

Point	Primary Fuse	Secondary Fuse
1	F1	F9
2	F2	F10
3	F3	F11
4	F4	F12
5	F5	F13
6	F6	F14
7	F7	F15
8	F8	F16

9661-510 (115 VAC, commoned, 8 pts.)

Termination panel 9661–510 is compatible with 115 VAC digital output modules and has 8 load terminals and commoned power terminals (PWR+ and PWR–). Each output point is protected by a fuse with a blown-fuse indicator.

Specifications

This table describes specifications for 9661–510.

Table 53 Specifications for Term Panel 9661-510

Feature	Description
Panel type	Commoned
Points	8

Compatible Modules

This table describes digital output modules compatible with 9661–510.

Table 54 Modules Compatible with 9661-510

Module Part Number	Points per Module	Module Description	Primary Fuse	Secondary Fuse
3611E	8	115 VAC, commoned, supervised, galvanically-isolated, TMR	2.5A, fast	None

Field Wiring Diagrams

This figure illustrates how to connect an 8-point supervised AC digital output module with shorted load detection and a 9661–510 to the field.

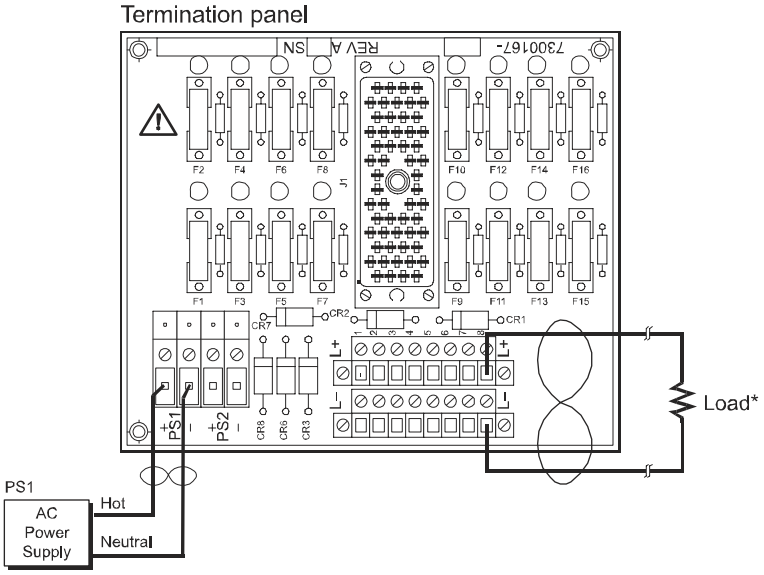

* A load must be installed at every point to prevent missing-load alarm.
If a field load is not available, install a 2.2k ohm, 10W load resistor.

Figure 49 Field Wiring for 9661-510 with a 3611E Module

Simplified Schematics

This is a simplified schematic of a typical 8-point commoned supervised AC digital output module with a commoned digital output panel (1 of 8 points shown).

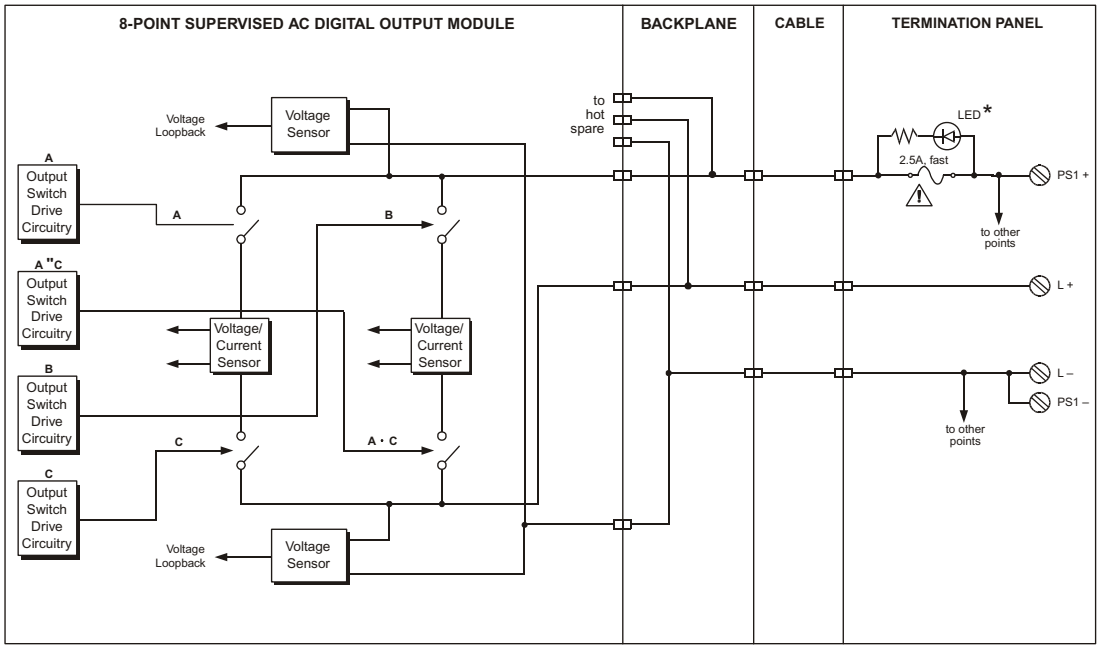

* LEDs are blown-fuse indicators

Figure 50 Simplified Schematic of a 3611E DO Module with a Commoned DO Panel

9661-810 (120 VDC, commoned, 8 pts.)

Termination panel 9668–810 is compatible with 120VDC digital output modules and has 8 load terminals and commoned power terminals (PWR+ and PWR–). Each output point is protected by a fuse with a blown-fuse indicator.

Specifications

This table describes specifications for 9661–810.

Table 55 Specifications for Term Panel 9661-810

Feature	Description
Panel type	Commoned
Points	8

Compatible Modules

This table describes digital output modules compatible with 9661–810.

Table 56 Modules Compatible with 9661-810

Module Part Number	Points per Module	Module Description	Primary Fuse	Secondary Fuse
3613E	8	120 VDC, commoned, supervised, galvanically-isolated, TMR	1A, fast	0.125A, fast

Field Wiring Diagrams

This figure illustrates how to connect an 8-point supervised DC digital output module and a 9661–810 to the field without shorted load detection.

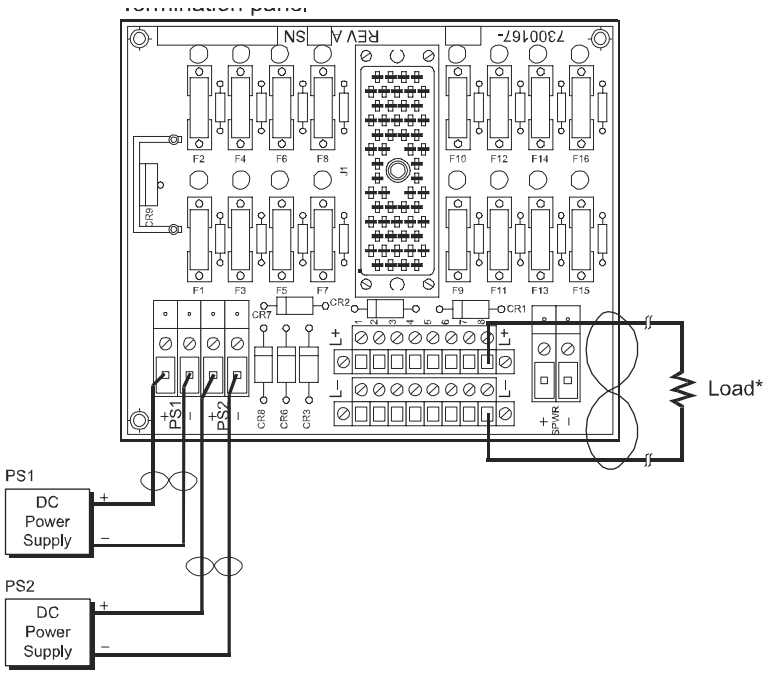

* To prevent missing-load alarm, install a load at each unused point.
If a field load is not available, install a 2.2 k ohm, 10 W load resistor.

Figure 51 Field Wiring for 9661-810 with a 3613E Module and No Shorted Load Detection

This figure illustrates how to connect an 8-point supervised DC digital output module and a 9661–810 to the field with shorted load detection.

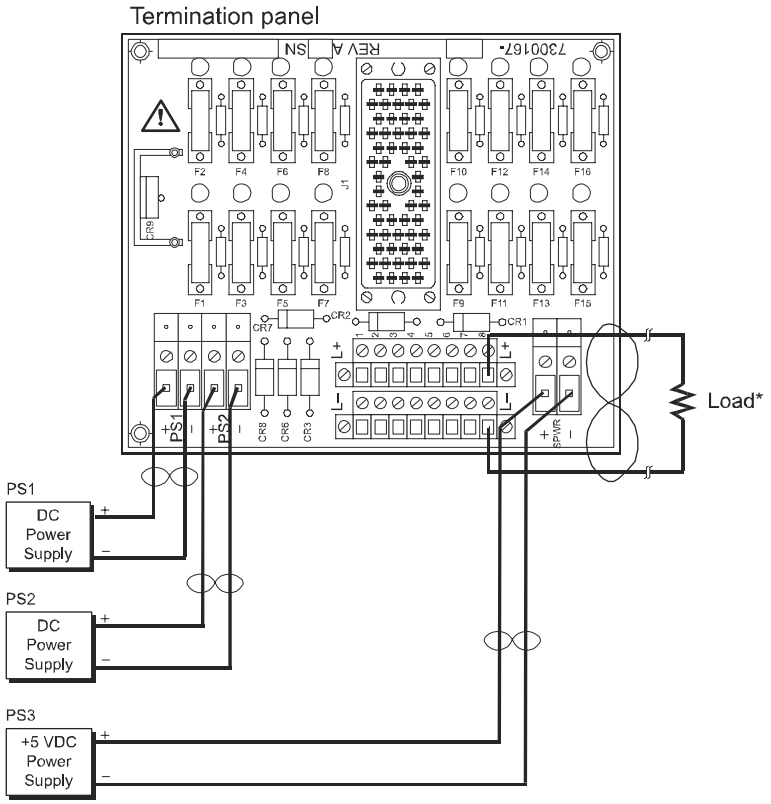

* To prevent missing-load alarm, install a load at each unused point.
If a field load is not available, install a 2.2 k ohm, 10 W load resistor.

Figure 52 Field Wiring for 9661-810 with a 3613E Module and Shorted Load Detection

Simplified Schematics

This is a simplified schematic of a typical 8-point commoned supervised DC digital output module with a commoned digital output panel (1 of 8 points shown).

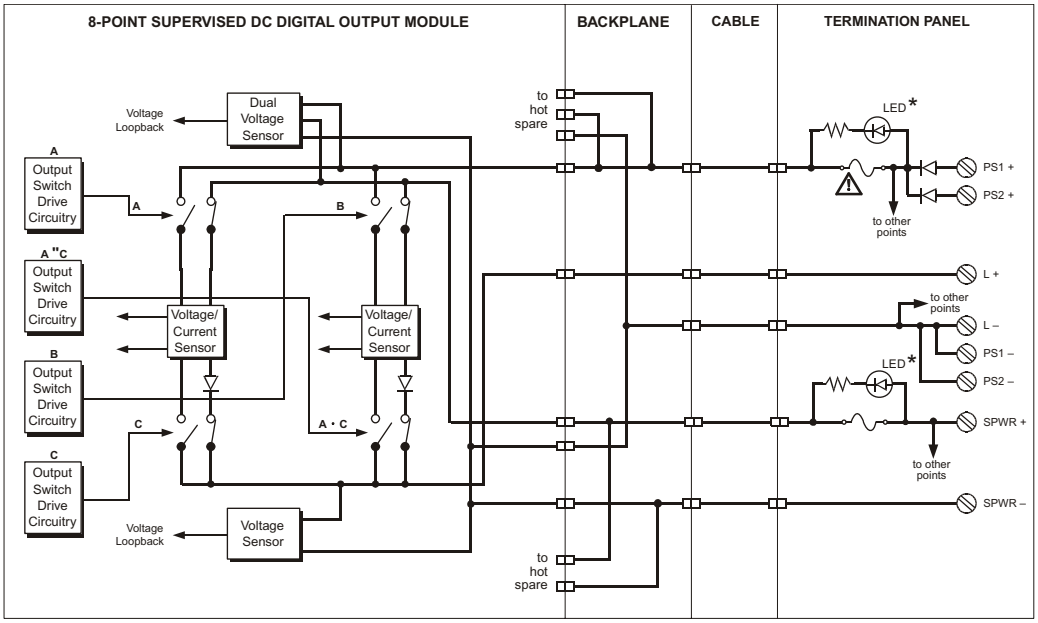

* LEDs are blown-fuse indicators

Figure 53 Simplified Schematic of a 3613E DO Module with a Commoned DO Panel

9662-710 (24 VDC low-power, commoned, 8 pts.)

Termination panel 9662–710 is compatible with 24 VDC low-power digital output modules and has 8 load terminals and commoned power terminals (PWR+ and PWR–). Each output point is protected by a fuse with a blown-fuse indicator.

Specifications

This table describes specifications for 9662–710.

Table 57 Specifications for Term Panel 9662-710

Feature	Description
Panel type	Commoned
Points	8

Compatible Modules

This table describes digital output modules compatible with 9662–710.

Table 58 Modules Compatible with 9662-710

Module Part Number	Points per Module	Module Description	Primary Fuse	Secondary Fuse
3615E	8	24 VDC, low-power, commoned, supervised, galvanically-isolated, TMR	0.25A, fast	0.125A, fast

Field Wiring Diagrams

This figure illustrates how to connect an 8-point supervised DC digital output module and a 9662–710 to the field without shorted load detection.

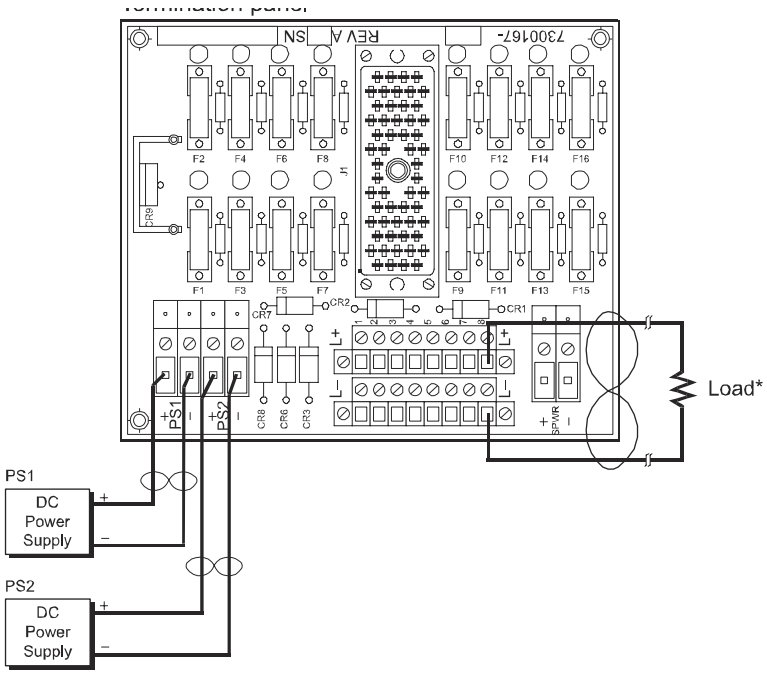

* To prevent missing-load alarm, install a load at each unused point.
If a field load is not available, install a 470 ohm, 10 W load resistor.

Figure 54 Field Wiring for 9662-710 with a 3615E Module and No Shorted Load Detection

This figure illustrates how to connect an 8-point supervised DC digital output module and a 9662–710 to the field with shorted load detection.

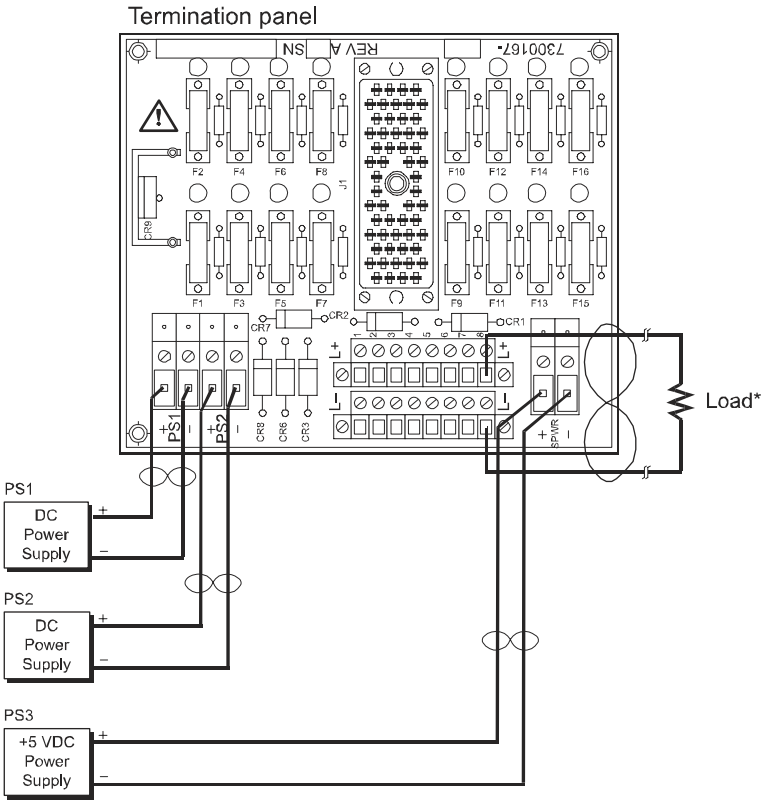

* To prevent missing-load alarm, install a load at each unused point.
If a field load is not available, install a 470 ohm, 10 W load resistor.

Figure 55 Field Wiring for 9662-710 with a 3615E Module and Shorted Load Detection

Simplified Schematics

This is a simplified schematic of a typical 8-point commoned supervised DC digital output module with a commoned digital output panel (1 of 8 points shown).

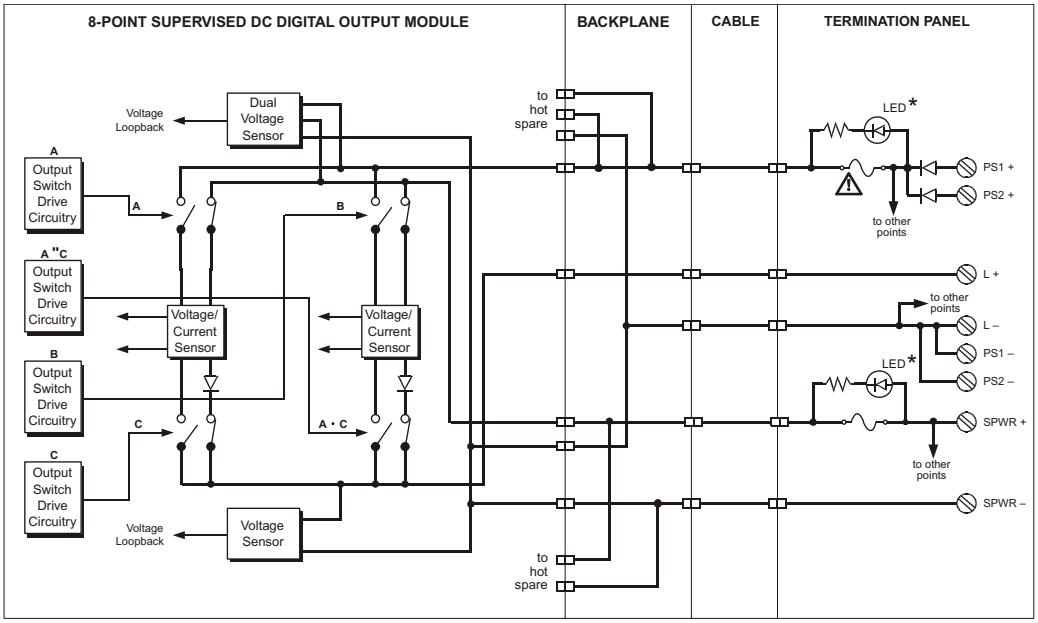

* LEDs are blown-fuse indicators

Figure 56 Simplified Schematic of a 3615E DO Module with a Commoned DO Panel

9662-910 (24 VDC, commoned, 8 pts.)

Termination panel 9662–910 is compatible with 24 VDC digital output modules and has 8 load terminals and commoned power terminals (PWR+ and PWR–). Each output point is protected by a fuse with a blown-fuse indicator.

Specifications

This table describes specifications for 9662–910.

Table 59 Specifications for Term Panel 9662-910

Feature	Description
Panel type	Commoned
Points	8

Compatible Modules

This table describes digital output modules compatible with 9662–910.

Table 60 Modules Compatible with 9662-910

Module Part Number	Points per Module	Module Description	Primary Fuse	Secondary Fuse
3614E	8	24 VDC, commoned, supervised, galvanically-isolated, TMR	1A, fast	0.125A, fast

Field Wiring Diagrams

This figure illustrates how to connect an 8-point supervised DC digital output module and a 9662–910 to the field without shorted load detection.

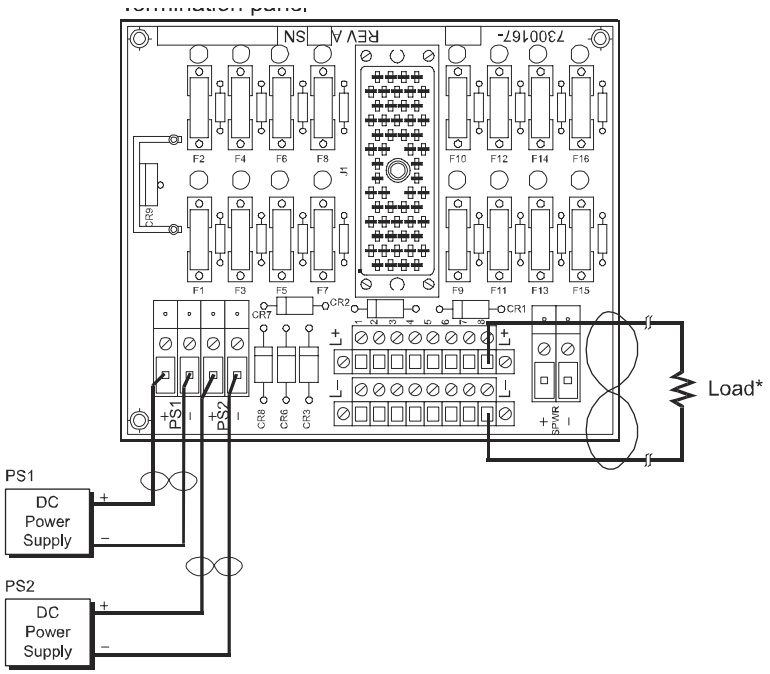

* To prevent missing-load alarm, install a load at each unused point.
If a field load is not available, install a 470 ohm, 10 W load resistor.

Figure 57 Field Wiring for 9662-910 with a 3614E Module and No Shorted Load Detection

This figure illustrates how to connect an 8-point supervised DC digital output module and a 9662–910 to the field with shorted load detection.

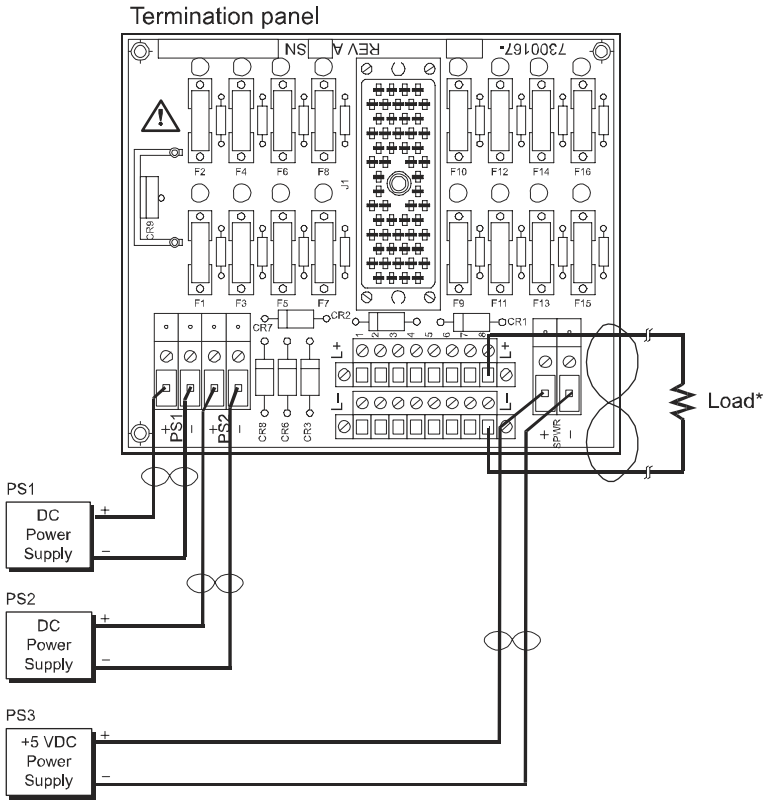

* To prevent missing-load alarm, install a load at each unused point.
If a field load is not available, install a 470 ohm, 10 W load resistor.

Figure 58 Field Wiring for 9662-910 with a 3614E Module and Shorted Load Detection

Simplified Schematics

This is a simplified schematic of a typical 8-point commoned supervised DC digital output module with a commoned digital output panel (1 of 8 points shown).

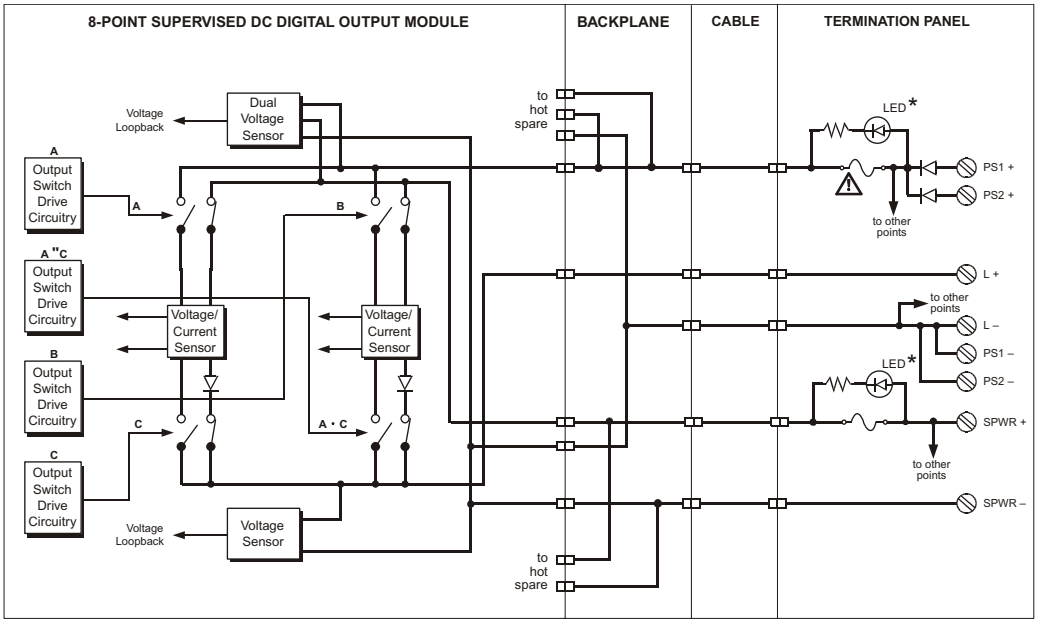

* LEDs are blown-fuse indicators

Figure 59 Simplified Schematic of a 3614E DO Module with a Commoned DO Panel

9667-910 (48 VDC, commoned, 8 pts.)

Termination panel 9667–910 is compatible with 48 VDC digital output modules and has 8 load terminals and commoned power terminals (PWR+ and PWR–). Each output point is protected by a fuse with a blown-fuse indicator.

Specifications

This table describes specifications for 9667–910.

Table 61 Specifications for Term Panel 9667-910

Feature	Description
Panel type	Commoned
Points	8

Compatible Modules

This table describes digital output modules compatible with 9667–910.

Table 62 Modules Compatible with 9667-910

Module Part Number	Points per Module	Module Description	Primary Fuse	Secondary Fuse
3617E	8	48 VDC, commoned, supervised, galvanically-isolated, TMR	1.25A, fast	0.125A, fast

Field Wiring Diagrams

This figure illustrates how to connect an 8-point supervised DC digital output module and a 9667–910 to the field without shorted load detection.

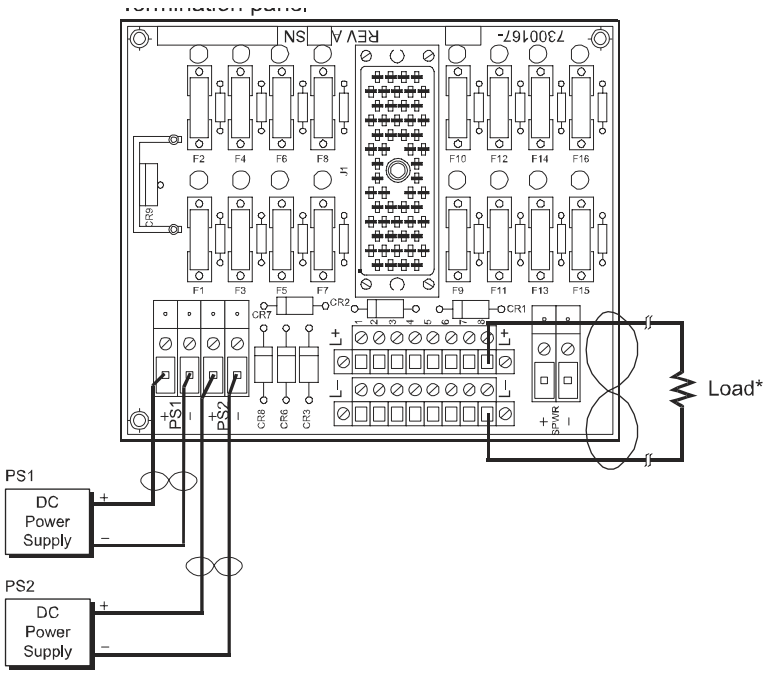

* To prevent missing-load alarm, install a load at each unused point.
If a field load is not available, install a 470 ohm, 10 W load resistor.

Figure 60 Field Wiring for 9667-910 with a 3617E Module and No Shorted Load Detection

This figure illustrates how to connect an 8-point supervised DC digital output module and a 9667–910 to the field with shorted load detection.

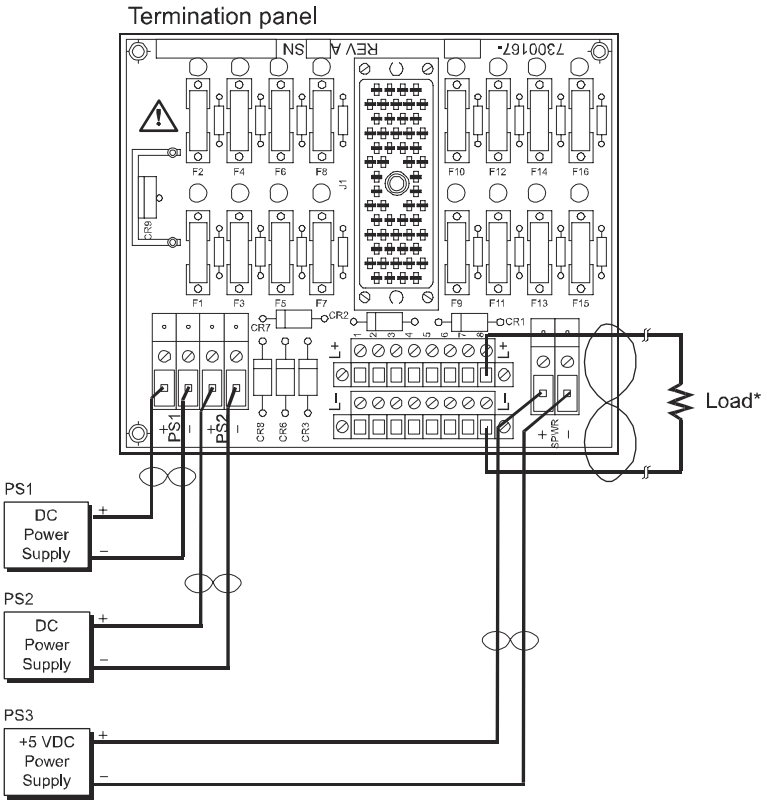

* To prevent missing-load alarm, install a load at each unused point.
If a field load is not available, install a 470 ohm, 10 W load resistor.

Figure 61 Field Wiring for 9667-910 with a 3617E Module and Shorted Load Detection

Simplified Schematics

This is a simplified schematic of a typical 8-point commoned supervised DC digital output module with a commoned digital output panel (1 of 8 points shown).

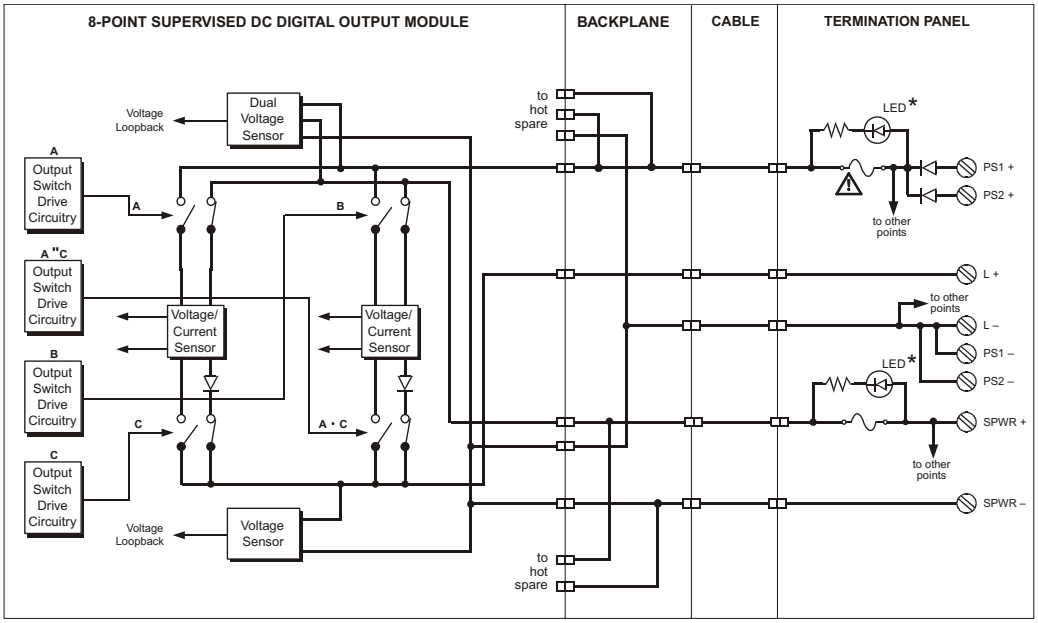

* LEDs are blown-fuse indicators

Figure 62 Simplified Schematic of a 3617E DO Module with a Commoned DO Panel

16-Point Commoned Digital Output Term Panels

This section describes 16-point commoned digital output term panels, which are available in AC versions or DC versions, and with fuses or without fuses. Model numbers of these term panels are:

- 9661-610 (115 VAC, commoned, 16 pts.)
- 9661-910 (120 VDC, commoned, 16 pts.)
- 9662-610 (24 VDC, commoned, 16 pts.)
- 9662-810 (24 VDC, commoned, 16 pts.)
- 9663-610 (115 VAC, commoned, 16 pts.)
- 9664-810 (120 VDC, commoned, 16 pts.)
- 9667-810 (48 VDC, commoned, 16 pts.)

This figure represents a typical 16-point commoned DC digital output termination panel with fuses and blown-fuse indicators.

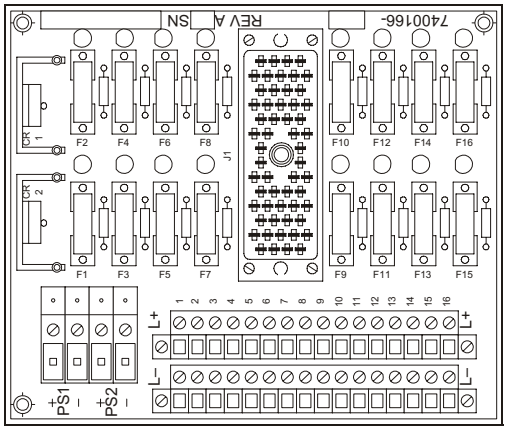

Figure 63 Typical 16-Point Commoned DC DO Term Panel with Fuses

This figure represents a typical 16-point commoned digital output panel without fuses.

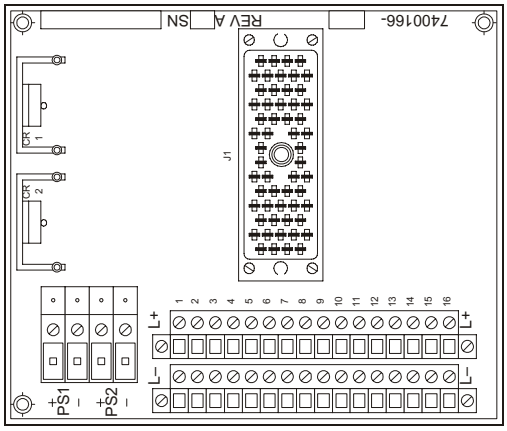

Figure 64 Typical 16-Point Commoned DO Term Panel without Fuses

This figure represents a typical 16-point commoned AC digital output termination panel with fuses and blown-fuse indicators for the 3601E module.

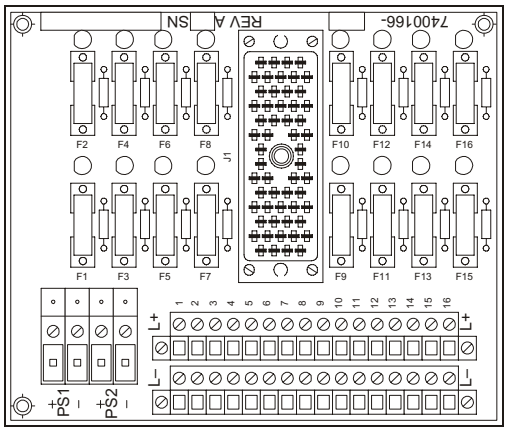

Figure 65 Typical 16-Point Commoned AC DO Term Panel with Fuses for 3601E

This figure represents a typical 16-point commoned AC digital output termination panel with fuses and blown-fuse indicators for the 3601T module.

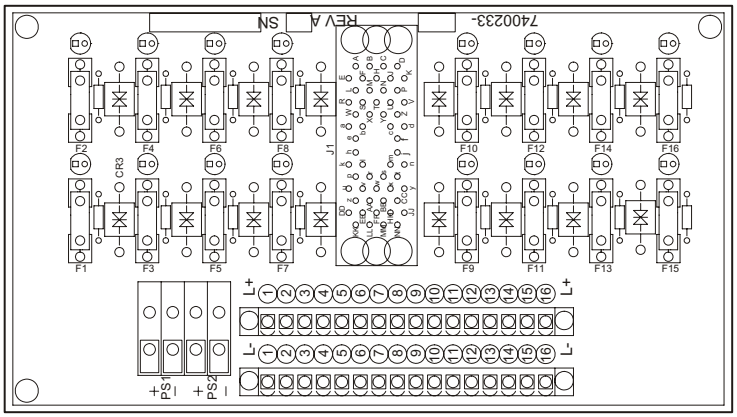

Figure 66 Typical 16-Point Commoned AC DO Term Panel with Fuses for 3601E or 3601T

9661-610 (115 VAC, commoned, 16 pts.)

Termination panel 9661–610 is compatible with 115 VAC digital output modules and has 16 load terminals and commoned power terminals (PWR+ and PWR–). Each output point is protected by a fuse with a blown-fuse indicator.

Specifications

This table describes specifications for 9661–610.

Table 63 Specifications for Term Panel 9661-610

Feature	Description
Panel type	Commoned
Points	16
Maximum total current	30 amps

Compatible Modules

This table describes digital output modules compatible with 9661–610.

Table 64 Modules Compatible with 9661-610

Module Part Number	Points per Module	Module Description	Primary Fuse
3601E	16	115 VAC, non-commoned, opto-isolated, TMR	3A, fast

Field Wiring Diagrams

This figure illustrates how to connect the 16-point AC digital output module 3601E and a 9661–610 to the field.

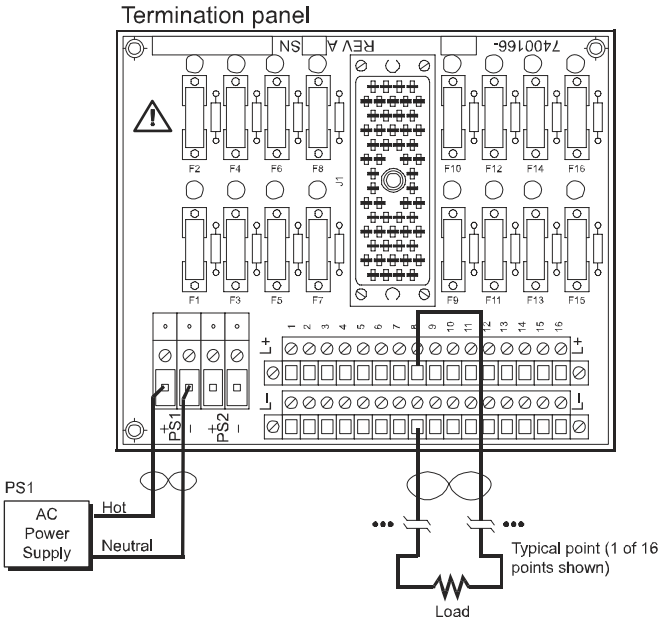

Figure 67 Field Wiring for 9661-610 with a 3601E Module

Simplified Schematics

This is a simplified schematic of a typical 16-point non-commoned AC digital output module with a commoned digital output panel (1 of 16 points shown).

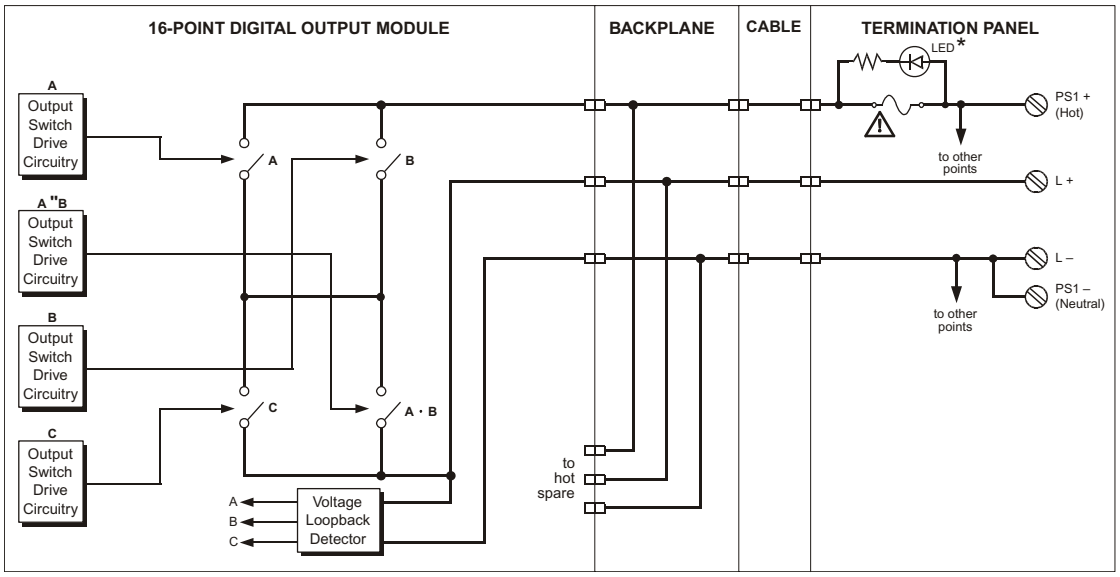

* LEDs are blown-fuse indicators

Figure 68 Simplified Schematic of a 3601E DO Module with a Commoned DO Panel

9661-910 (120 VDC, commoned, 16 pts.)

Termination panel 9661–910 is compatible with 120 VDC digital output modules and has 16 load terminals and commoned power terminals (PWR+ and PWR–). Each output point is protected by a fuse with a blown-fuse indicator.

Specifications

This table describes specifications for 9661–910.

Table 65 Specifications for Term Panel 9661-910

Feature	Description
Panel type	Commoned
Points	16
Maximum total current	16 amps

Compatible Modules

This table describes digital output modules compatible with 9661–910.

Table 66 Modules Compatible with 9661-910

Module Part Number	Points per Module	Module Description	Primary Fuse
3603E	16	120 VDC, commoned, opto-isolated, TMR	1A, fast
3623	16	120 VDC, commoned, supervised, opto-isolated, TMR	1A, fast

Field Wiring Diagrams

This figure illustrates how to connect a 16-point DC digital output module and a 9661–910 to the field (1 of 16 points shown).

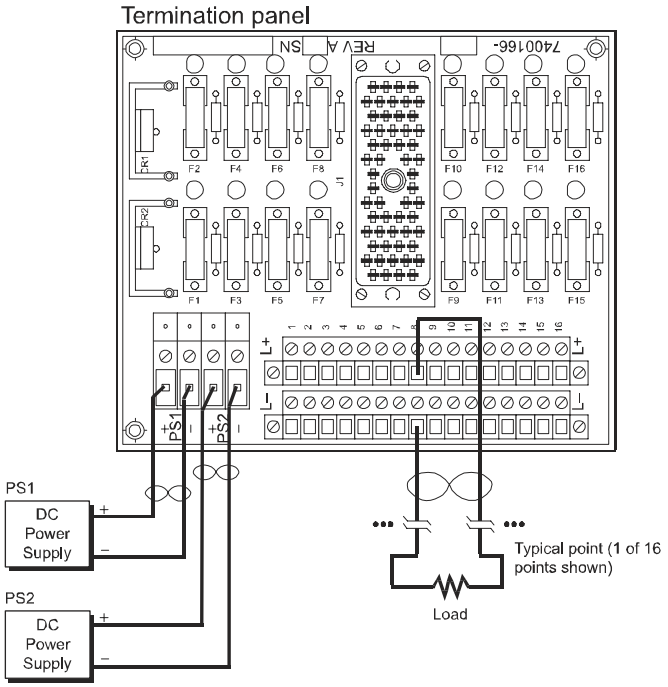

Figure 69 Field Wiring for 9661-910 with a 3603E Module

This figure illustrates how to connect the 16-point supervised DC digital output module 3623 and a 9661–910 to the field (8 of 16 points shown).

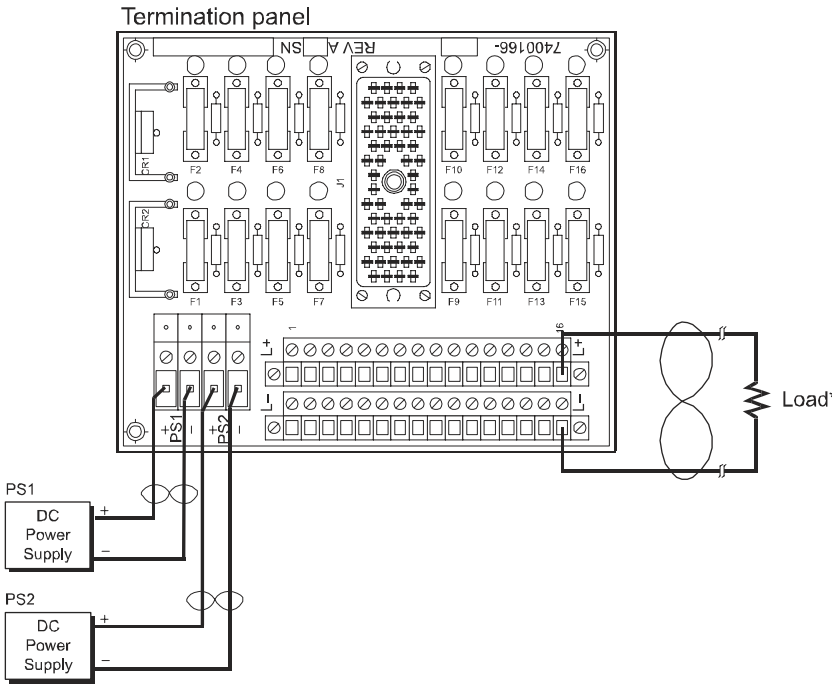

* A load must be installed at every point to prevent a missing-load alarm.
If a field load is not available, install a 2.2k ohm, 10W load resistor.

Figure 70 Field Wiring for 9661-910 with a 3623 Module

Simplified Schematics

This is a simplified schematic of a typical 16-point commoned DC digital output module with a commoned digital output panel (1 of 16 points shown).

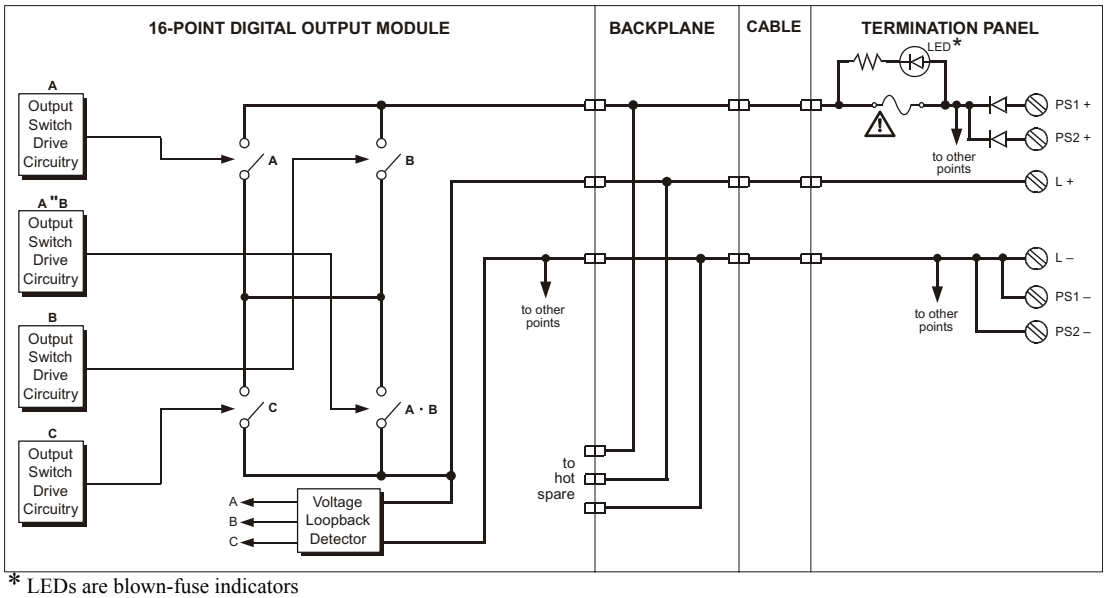

* LEDs are blown-fuse indicators

Figure 71 Simplified Schematic of a 3603E DO Module with a Commoned DO Panel

This is a simplified schematic of a typical 16-point commoned supervised DC digital output module with a commoned digital output panel (1 of 16 points shown).

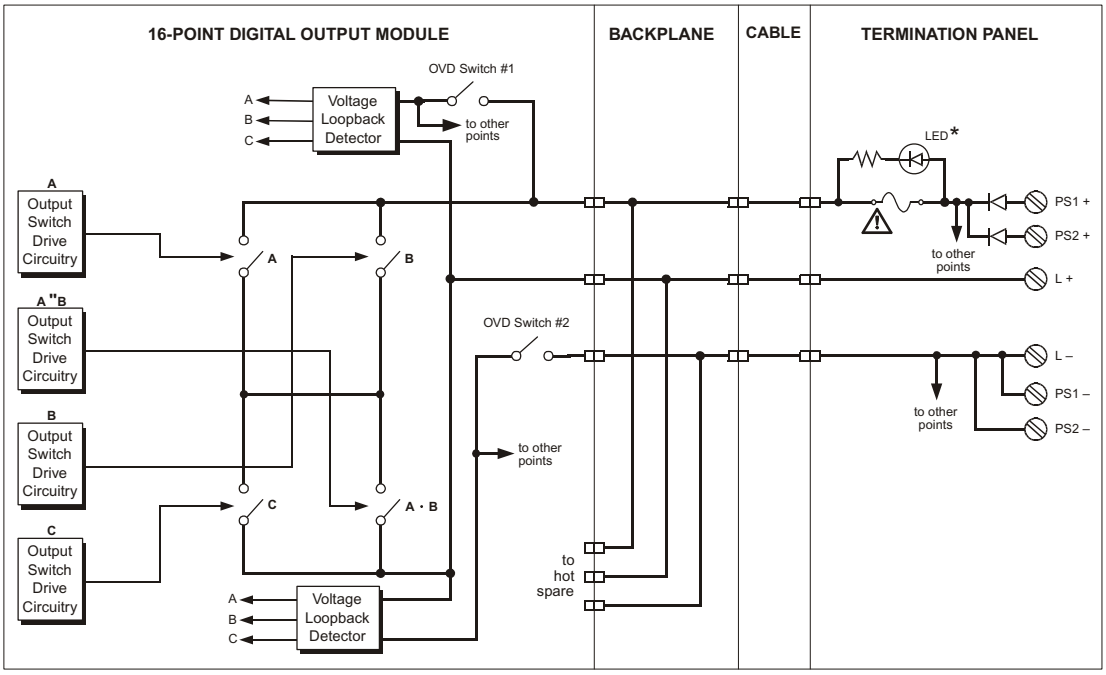

* LEDs are blown-fuse indicators

Figure 72 Simplified Schematic of a 3623 DO Module with a Commoned DO Panel

9662-610 (24 VDC, commoned, 16 pts.)

Termination panel 9662–610 is compatible with 24 VDC digital output modules and has 16 load terminals and commoned power terminals (PWR+ and PWR–).

CAUTION Use termination panel 9662-610 with self-protected modules only.

When using 32-point modules, you must use two term panels for each digital output module. Each term panel comes with two sets of labels: 1-16 and 17-32. For information on how to apply the labels, see Appendix F, Panel Labels.

Specifications

This table describes specifications for 9662–610.

Table 67 Specifications for Term Panel 9662-610

Feature	Description
Panel type	Commoned
Points	16
Maximum total current[1]	16 amps

1. When the 9662-610 panel is used with the Model 3625 DO Module, the maximum total current is 10 amps per termination panel to limit the power dissipation of the module.

Compatible Modules

This table describes digital output modules compatible with 9662–610.

Table 68 Modules Compatible with 9662-610

Module Part Number	Points per Module	Module Description
3624	16	24 VDC, commoned, supervised, opto-isolated, self-protected, TMR
3625	32	24 VDC, commoned, supervised/non-supervised, opto-isolated, self-protected, TMR
3664	32	24 VDC, commoned, opto-isolated, self-protected, dual
3674	32	24 VDC, commoned, opto-isolated, self-protected, dual

Field Wiring Diagrams

This figure illustrates how to connect a 16-point or 32-point supervised DC digital output module with self protection and a 9662-610 to the field (1 of 16 points shown).

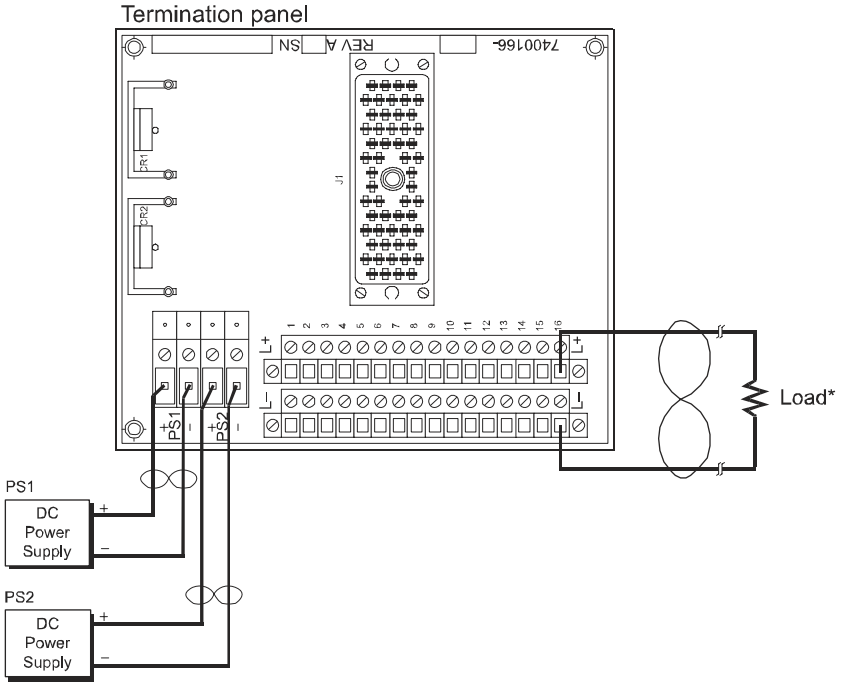

* When using a Model 3624 or 3625 module, a load must be installed at every point to prevent missing-load alarm. If a field load is not available, install a 470 ohm, 10 W load resistor.

Figure 73 Field Wiring for 9662-610 with a 3624 or 3625 Module

This figure illustrates how to connect a 32-point DC dual digital output module with self protection and a 9662-610 to the field (1 of 32 points shown).

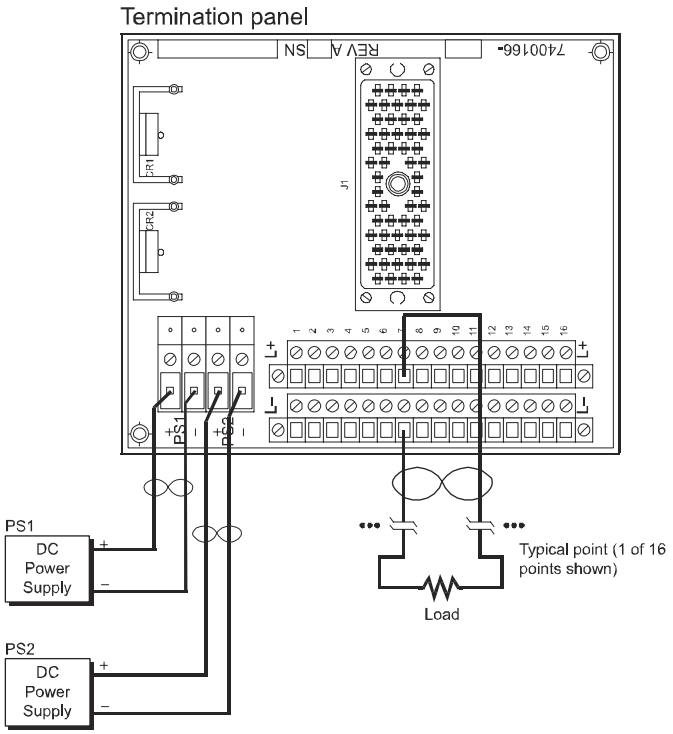

Figure 74 Field Wiring for 9662-610 with a 3664 or 3674 Module

Simplified Schematics

This is a simplified schematic of a typical 16-point commoned DC digital output module with self protection and a commoned digital output panel (1 of 16 points shown).

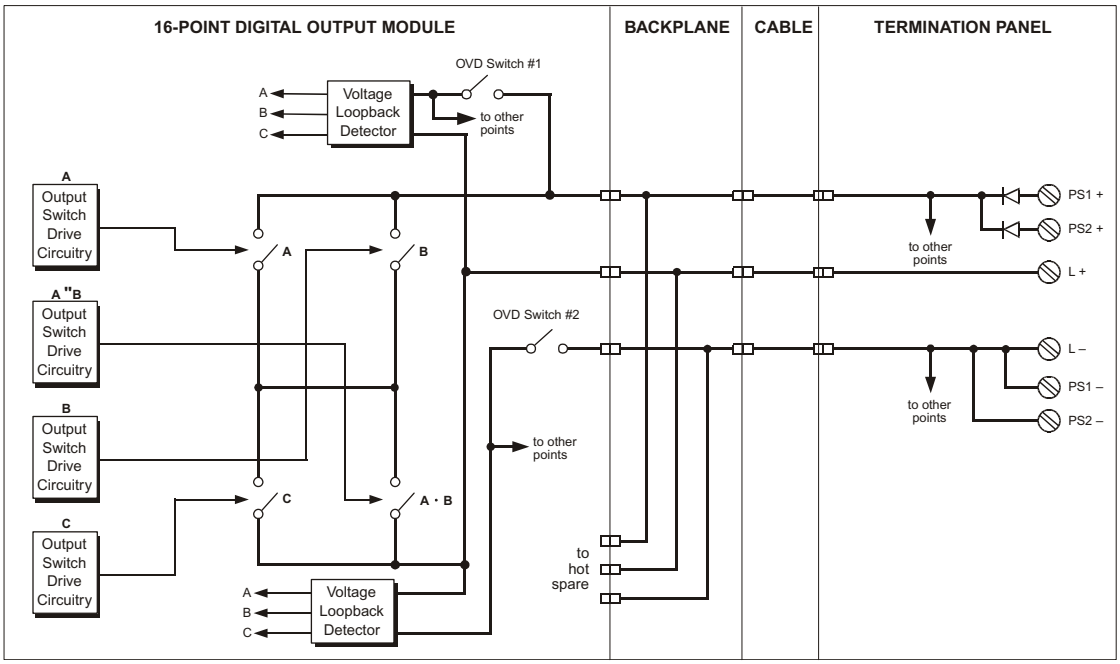

Figure 75 Simplified Schematic of a 3624 DO Module with a Commoned DO Panel

This is a simplified schematic of a typical 32-point commoned DC digital output module with self protection and a commoned digital output panel (1 of 32 points shown).

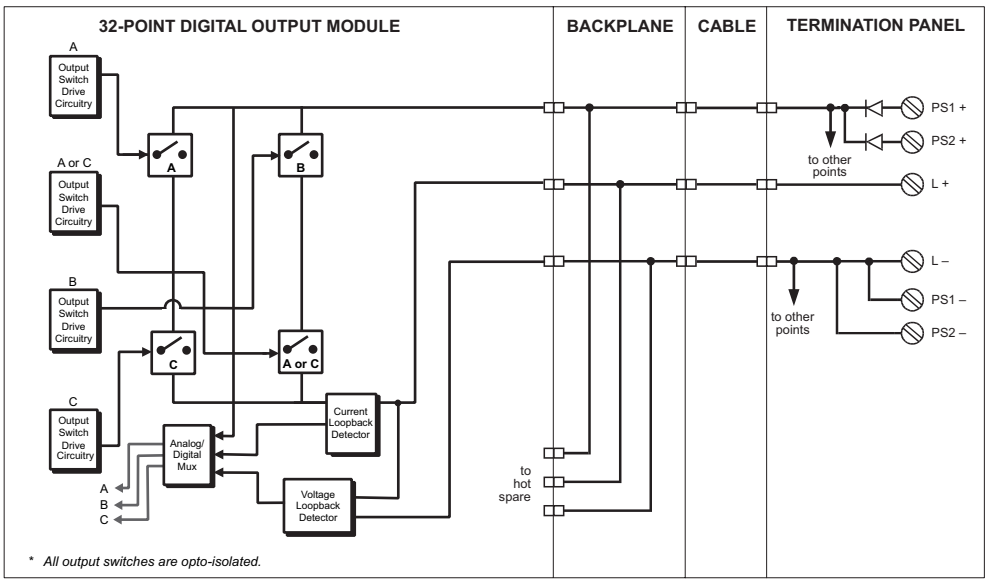

Figure 76 Simplified Schematic of a 3625 DO Module with a Commoned DO Panel

This is a simplified schematic of a typical 32-point commoned dual DC digital output module with self protection and a commoned digital output panel (1 of 16 points shown).

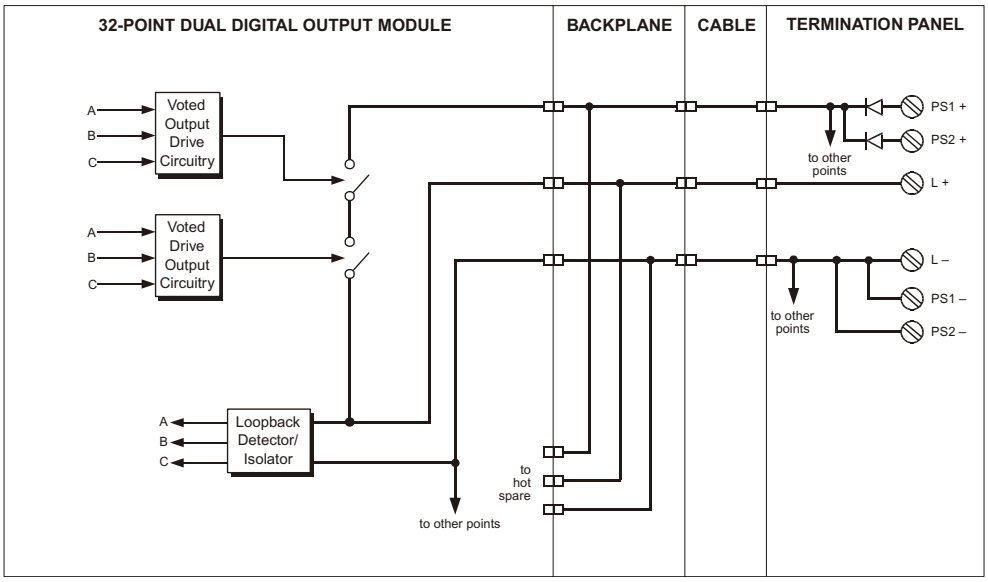

Figure 77 Simplified Schematic of a 3664 or 3674 DO Module with a Commoned DO Panel

9662-810 (24 VDC, commoned, 16 pts.)

Termination panel 9662–810 is compatible with 24 VDC digital output modules and has 16 load terminals and commoned power terminals (PWR+ and PWR–). Each output point is protected by a fuse with a blown-fuse indicator.

Specifications

This table describes specifications for 9662–810.

Table 69 Specifications for Term Panel 9662-810

Feature	Description
Panel type	Commoned
Points	16
Maximum total current	16 amps

Compatible Modules

This table describes digital output modules compatible with 9662–810.

Table 70 Modules Compatible with 9662-810

Module Part Number	Points per Module	Module Description	Primary Fuse
3604E	16	24 VDC, non-commoned, opto-isolated, TMR	2.5A, fast

Field Wiring Diagrams

This figure illustrates how to connect the 16-point DC digital output module 3604E and a 9662-810 to the field (1 of 16 points shown).

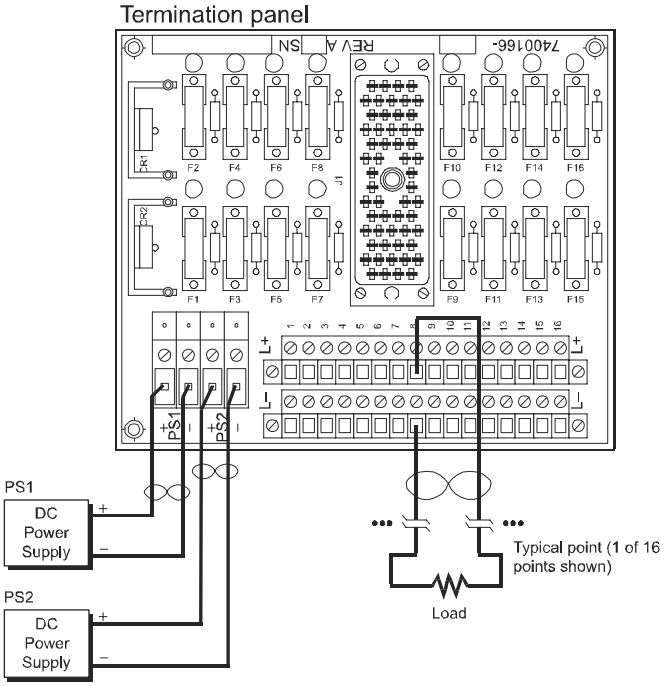

Figure 78 Field Wiring for 9662-810 with a 3604E Module

Simplified Schematics

This is a simplified schematic of a typical 16-point non-commoned DC digital output module with a commoned digital output panel (1 of 16 points shown).

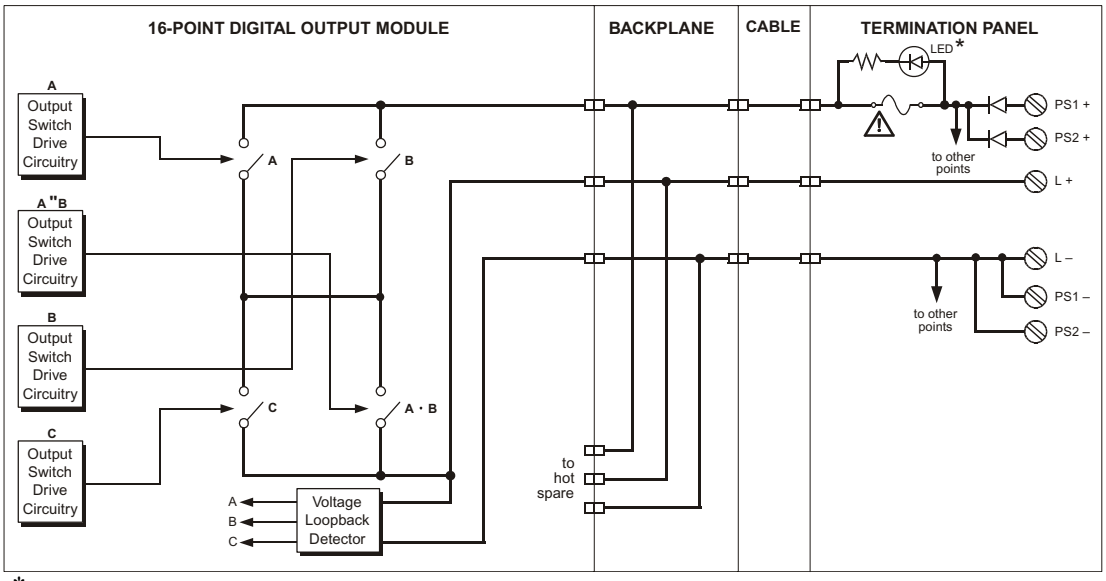

* LEDs are blown-fuse indicators

Figure 79 Simplified Schematic of a 3604E DO Module with a Commoned DO Panel

9663-610 (115 VAC, commoned, 16 pts.)

Termination panel 9663–610 is compatible with 115 VAC digital output modules and has 16 load terminals and commoned power terminals (PWR+ and PWR–). Each output point is protected by a fuse with a blown-fuse indicator.

Specifications

This table describes specifications for 9663–610.

Table 71 Specifications for Term Panel 9663-610

Feature	Description
Panel type	Commoned
Points	16
Maximum total current	30 amps

Compatible Modules

This table describes digital output modules compatible with 9663–610.

Table 72 Modules Compatible with 9663-610

Module Part Number	Points per Module	Module Description	Primary Fuse
3601E	16	115 VAC, non-commoned, opto-isolated, TMR	3A, fast
3601T	16	115 VAC, non-commoned, opto-isolated, TMR	3A, fast

Field Wiring Diagrams

This figure illustrates how to connect the 16-point AC digital output module 3601E or 3601T and a 9663–610 to the field (1 of 16 points shown).

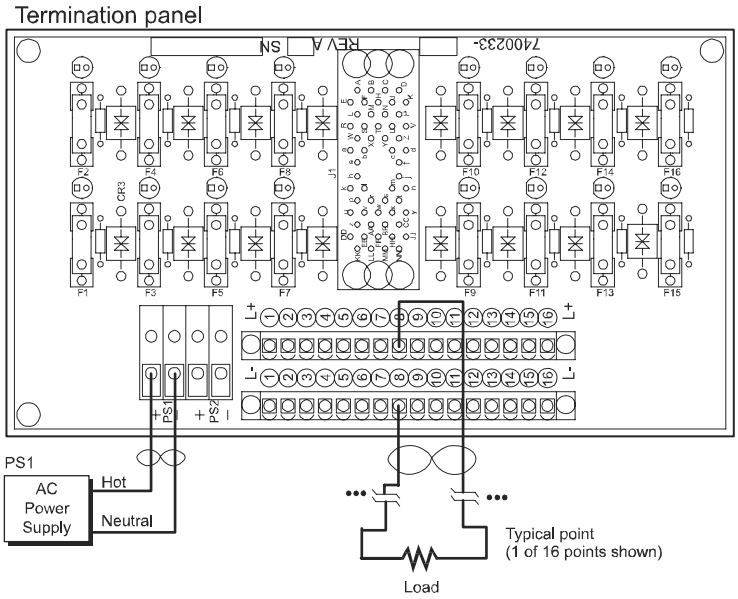

Figure 80 Field Wiring for 9663-610 with a 3601E or 3601T Module

Simplified Schematics

This is a simplified schematic of a typical 16-point non-commoned AC digital output module with a commoned digital output panel (1 of 16 points shown).

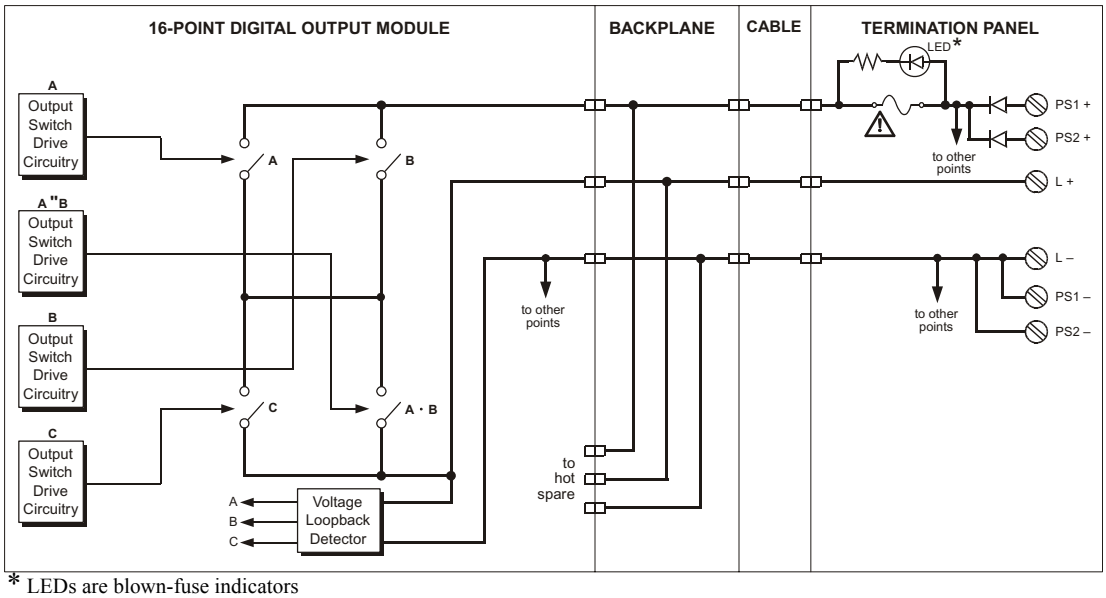

* LEDs are blown-fuse indicators

Figure 81 Simplified Schematic of a 3601E or 3601T DO Module with a Commoned DO Panel

9664-810 (120 VDC, commoned, 16 pts.)

Termination panel 9664–810 is compatible with 120 VDC digital output modules and has 16 load terminals and commoned power terminals (PWR+ and PWR–). Each output point is protected by a fuse with a blown-fuse indicator.

Specifications

This table describes specifications for 9664–810.

Table 73 Specifications for Term Panel 9664-810

Feature	Description
Panel type	Commoned
Points	16
Maximum total current	16 amps

Compatible Modules

This table describes digital output modules compatible with 9664–810.

Table 74 Modules Compatible with 9664-810

Module Part Number	Points per Module	Module Description	Primary Fuse
3603E	16	120 VDC, commoned, opto-isolated, TMR	1A, fast
3603T	16	120 VDC, commoned, opto-isolated, TMR	1A, fast
3623T	16	120 VDC, commoned, supervised, opto-isolated, TMR	1A, fast

Field Wiring Diagrams

This figure illustrates how to connect the 16-point DC digital output module 3603E or 3603T and a 9664–810 to the field (1 of 16 points shown).

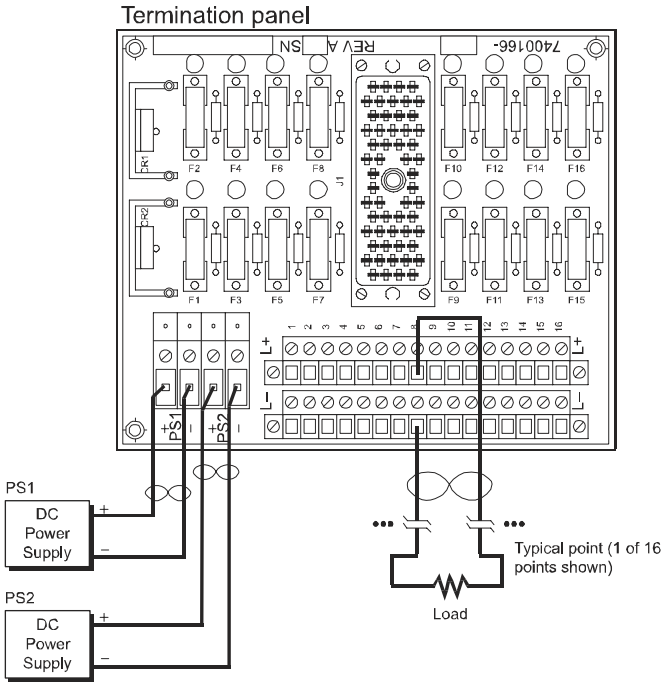

Figure 82 Field Wiring for 9664-810 with a 3603E or 3603T Module

This figure illustrates how to connect the 16-point supervised DC digital output module 3623T and a 9664–810 to the field (8 of 16 points shown).

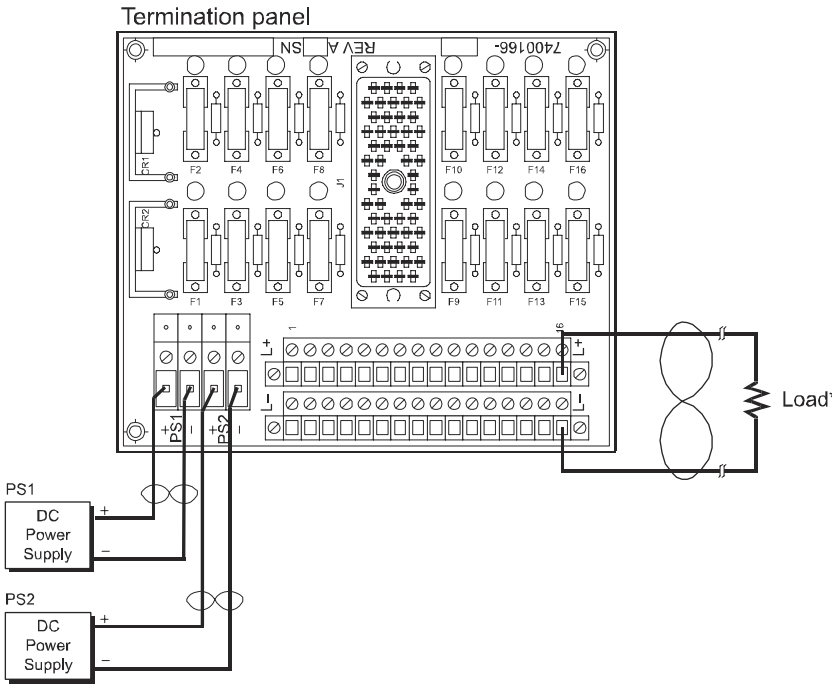

* A load must be installed at every point to prevent a missing-load alarm.
If a field load is not available, install a 2.2k ohm, 10W load resistor.

Figure 83 Field Wiring for 9664-810 with a 3623T Module

Simplified Schematics

This is a simplified schematic of a typical 16-point commoned DC digital output module with a commoned digital output panel (1 of 16 points shown).

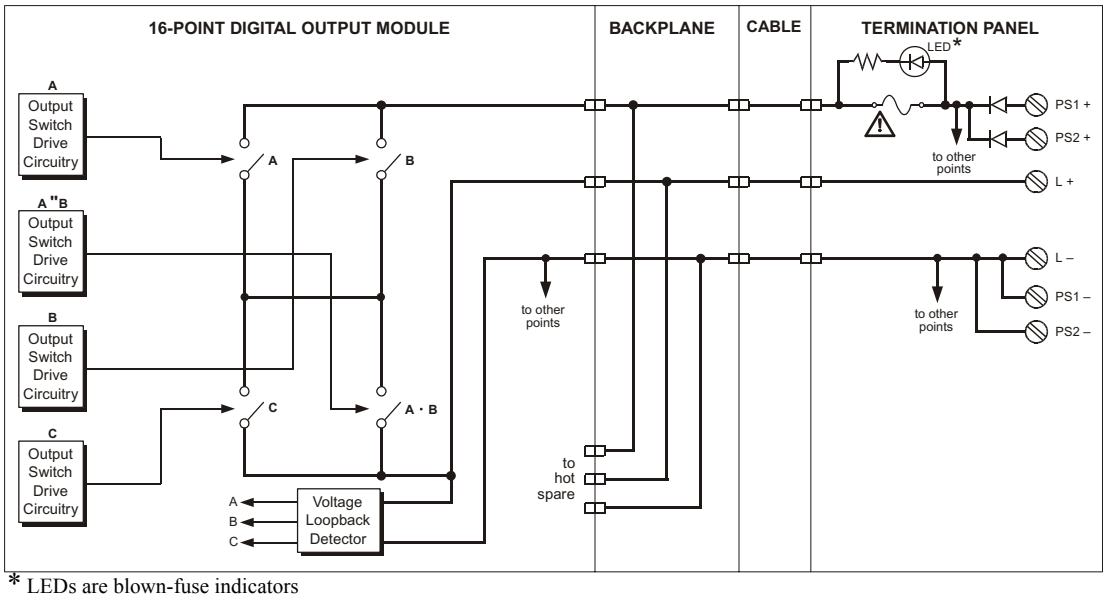

* LEDs are blown-fuse indicators

Figure 84 Simplified Schematic of a 3603E or 3603T DO Module with a Commoned DO Panel

This is a simplified schematic of a typical 16-point commoned supervised DC digital output module with a commoned digital output panel (1 of 16 points shown).

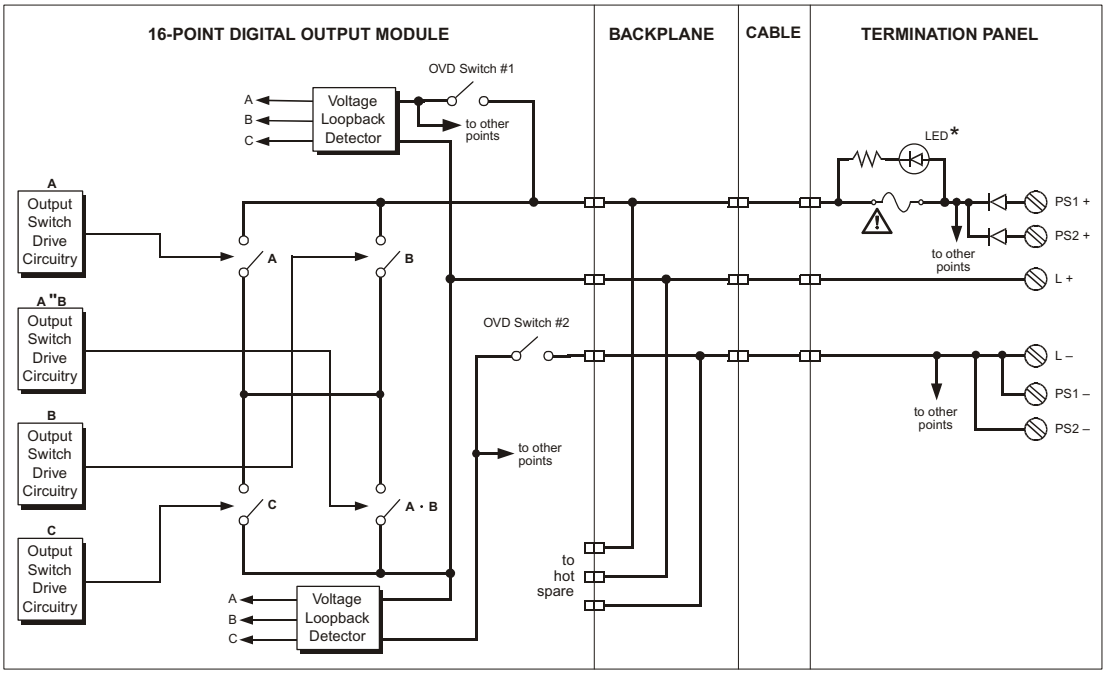

* LEDs are blown-fuse indicators

Figure 85 Simplified Schematic of a 3623T DO Module with a Commoned DO Panel

9667-810 (48 VDC, commoned, 16 pts.)

Termination panel 9667–810 is compatible with 48 VDC digital output modules and has 16 load terminals and commoned power terminals (PWR+ and PWR–). Each output point is protected by a fuse with a blown-fuse indicator.

Specifications

This table describes specifications for 9667–610.

Table 75 Specifications for Term Panel 9667-810

Feature	Description
Panel type	Commoned
Points	16
Maximum total current	16 amps

Compatible Modules

This table describes digital output modules compatible with 9667–810.

Table 76 Modules Compatible with 9667-810

Module Part Number	Points per Module	Module Description	Primary Fuse
3607E	16	48 VDC, non-commoned, opto-isolated, TMR	1.5A, fast

Field Wiring Diagrams

This figure illustrates how to connect the 16-point DC digital output module 3607E and a 9667-810 to the field (1 of 16 points shown).

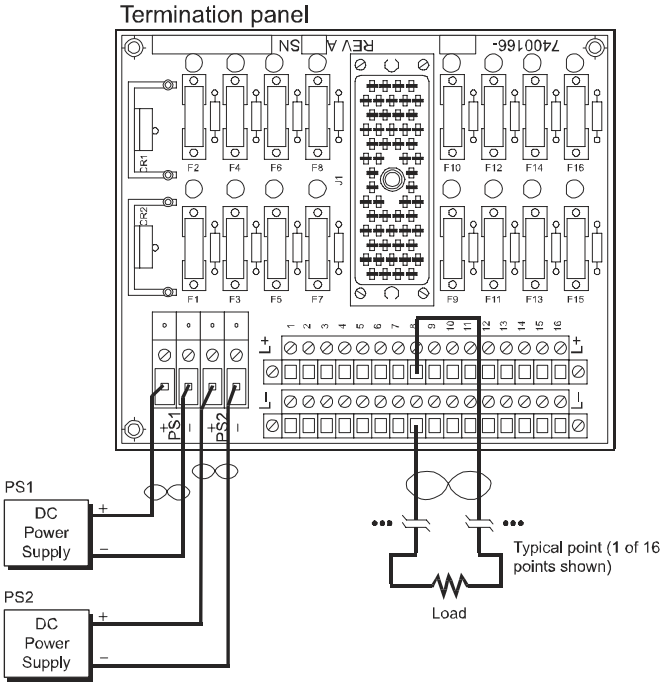

Figure 86 Field Wiring for 9667-810 with a 3607E Module

Simplified Schematics

This is a simplified schematic of a typical 16-point non-commoned DC digital output module with a commoned digital output panel (1 of 16 points shown).

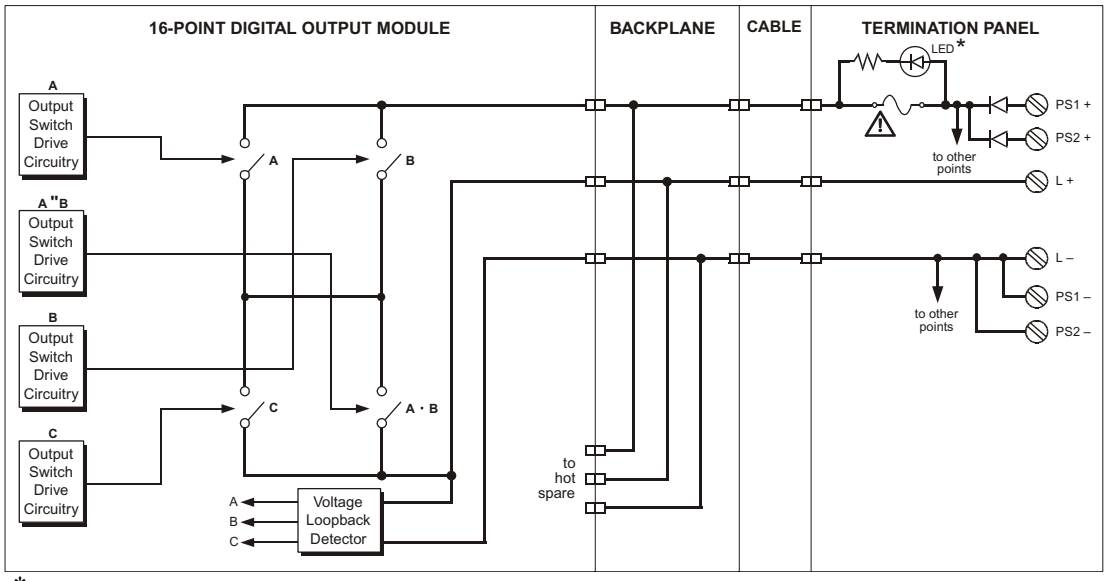

* LEDs are blown-fuse indicators

Figure 87 Simplified Schematic of a 3607E DO Module with a Commoned DO Panel

16-Point Non-Commoned Digital Output Term Panels

This section describes non-commoned digital output term panels. Model numbers of these term panels are:

- 9251-210 (120 VDC, non-commoned, 16 pts., 3603B module)
- 9661-110 (115 VAC, non-commoned, 16 pts.)
- 9662-110 (24 VDC, non-commoned, 16 pts.)
- 9664-110 (115 VAC, non-commoned, 16 pts.)
- 9667-110 (48 VDC, non-commoned, 16 pts.)
- 9668-110 (non-commoned relay output, 16 pts.)

This figure represents a typical 16-point non-commoned digital output termination panel for the 3603B module.

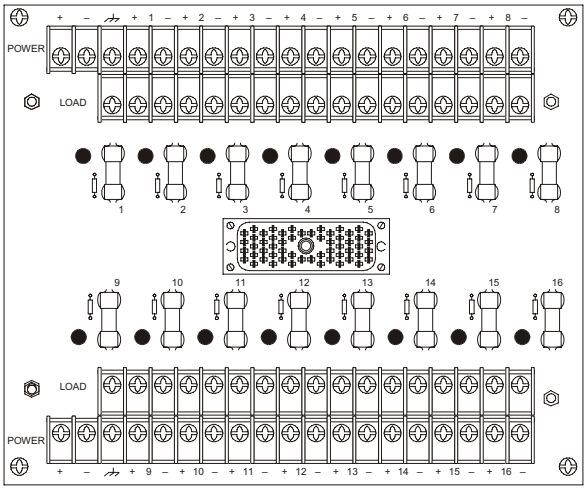

Figure 88 Typical 16-Point Non-Commoned DO Term Panel for Module 3603B

This figure represents a typical 16-point non-commoned digital output termination panel for modules 3601E, 3604E, and 3607E.

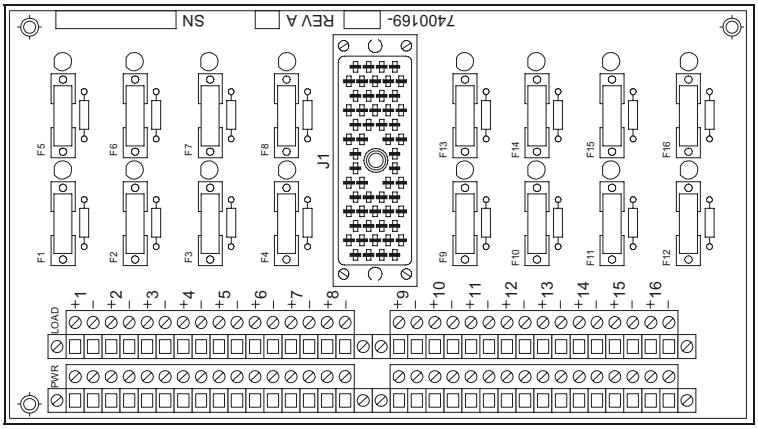

Figure 89 Typical 16-Point Non-Commoned DO Term Panel for Modules 3601E, 3604E, and 3607E

This figure represents a typical 16-point non-commoned digital output termination panel for module 3601T.

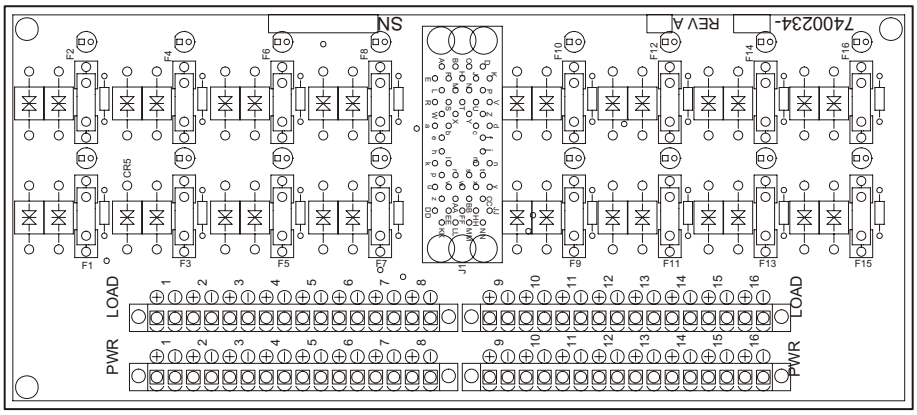

Figure 90 Typical 16-Point Non-Commoned DO Term Panel for Module 3601T

This figure represents a typical 16-point non-commoned relay output termination panel.

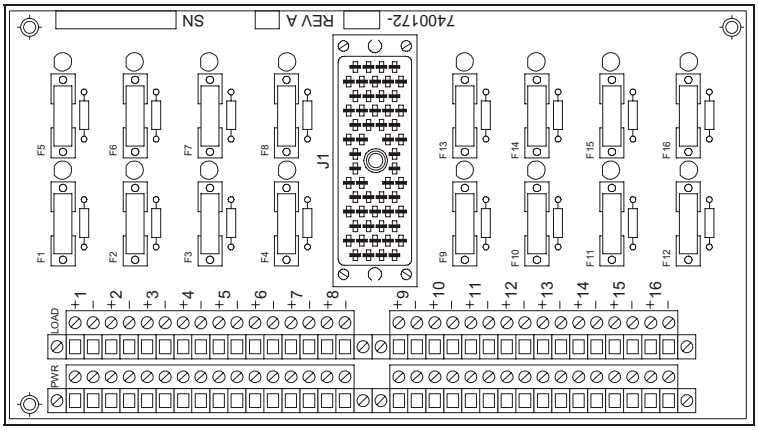

Figure 91 Typical 16-Point Non-Commoned Relay Output Term Panel

9251-210 (120 VDC, non-commoned, 16 pts., 3603B module)

Termination panel 9251-210 has 16 non-commoned output points and is compatible with only 3603B digital output modules.

The 9251-210 is a 6.75 in. x 8.5 in. termination panel mounted on a 7 in. x 19 in. EIA Standard #RS-310-C mounting plate with a smoked-plexiglas cover (two pieces) and a 10-foot cable. The mounting plate has room for two termination panels. If you order a second termination panel you can mount it on the first mounting plate and save or discard the second mounting plate.

Each output point has a:

- Positive and negative terminal for connecting to a field load.
- Positive and negative terminal for connecting field power.
- Blown-fuse indicator (LED).

Specifications

This table describes specifications for 9251–210.

Table 77 Specifications for Term Panel 9251-210

Feature	Description
Panel type	Non-commoned
Points	16
Leakage current per point	Maximum: 3.3 mA Typical: 2.5 mA

Compatible Modules

This table describes digital output modules compatible with 9251–210.

Table 78 Modules Compatible with 9251-210

Module Part Number	Points per Module	Module Description	Fuse
3603B	16	120 VDC, non-commoned, TMR	1A, fast

Field Wiring Diagrams

This figure illustrates how to connect a 16-point digital output module and a 9251–210 to the field (1 of 16 points shown).

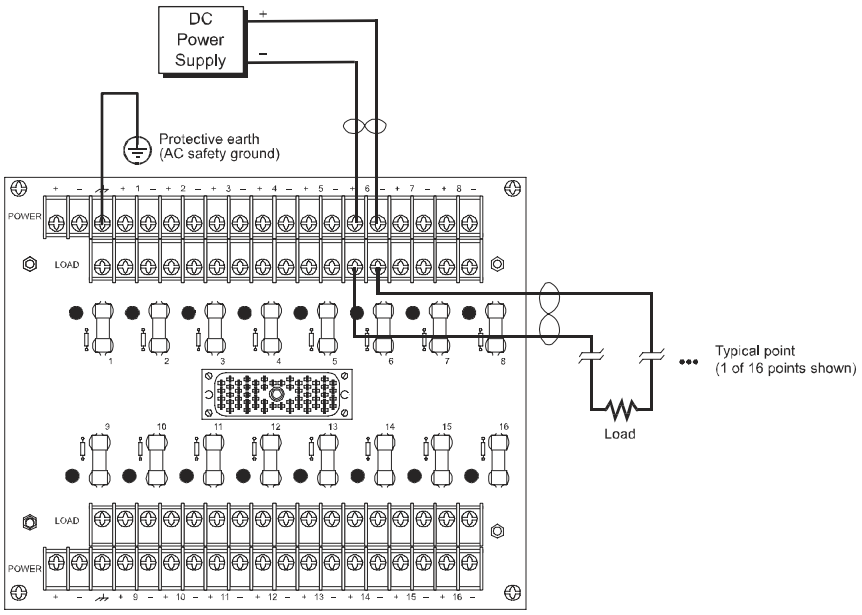

Figure 92 Field Wiring for 9251-210 with a 3603B Module

Each terminal accepts either #6 ring-lug terminals or 24-gauge to 12-gauge (0.3 mm^2 to 2.1 mm^2) wires.

CAUTION

Do not exceed 10 inch-pounds (1.13 Nm) of torque when securing the #6 screws on the termination panel. Although the #6 screws are rated for 16 inch-pounds (1.81 Nm), the standard industrial torque limit for #6 to #32 screws is 6 to 8 inch-pounds (0.68 to 0.90 Nm).

Simplified Schematics

This is a simplified schematic of a typical 16-point non-commoned digital output module with a non-commoned digital output panel (1 of 16 points shown).

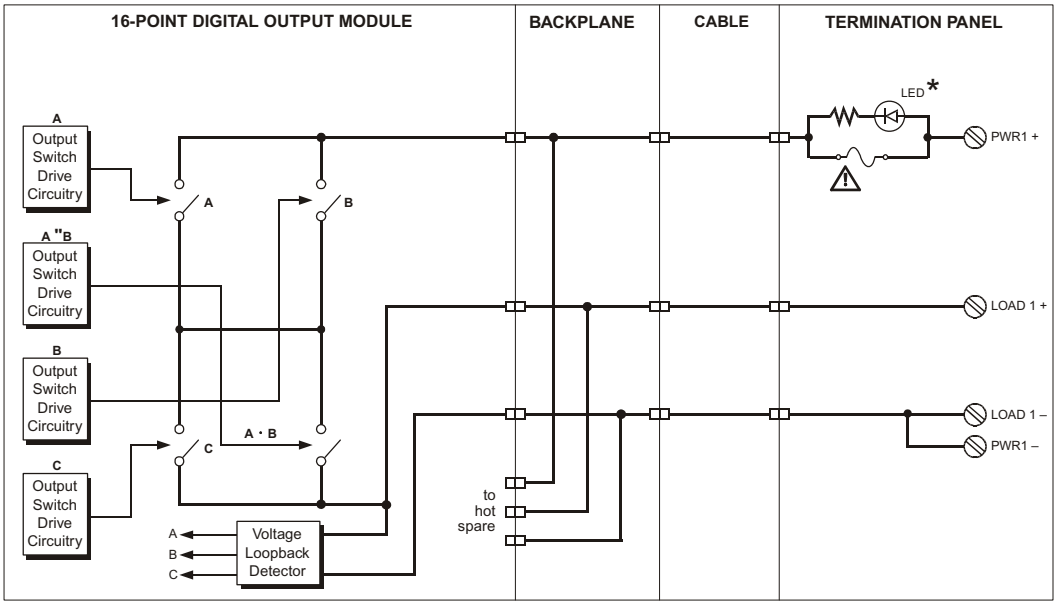

* LEDs are blown-fuse indicators

Figure 93 Simplified Schematic of a 3603B DO Module with a Non-Commoned DO Panel

9661-110 (115 VAC, non-commoned, 16 pts.)

Termination panel 9661–110 is compatible with 115 VAC digital output modules and has:

- 16 LOAD+ and LOAD– terminals
- 16 PWR+ and PWR– terminals
- 16 fuses with blown-fuse indicators

Specifications

This table describes specifications for 9661–110.

Table 79 Specifications for Term Panel 9661-110

Feature	Description
Panel type	Non-commoned
Points	16

Compatible Modules

This table describes digital output modules compatible with 9661–110.

Table 80 Modules Compatible with 9661-110

Module Part Number	Points per Module	Module Description	Fuse
3601E	16	115 VAC, non-commoned, opto-isolated, TMR	3A, fast

Field Wiring Diagrams

This figure illustrates how to connect a 16-point digital output module and a 9661–110 to the field (1 of 16 points shown).

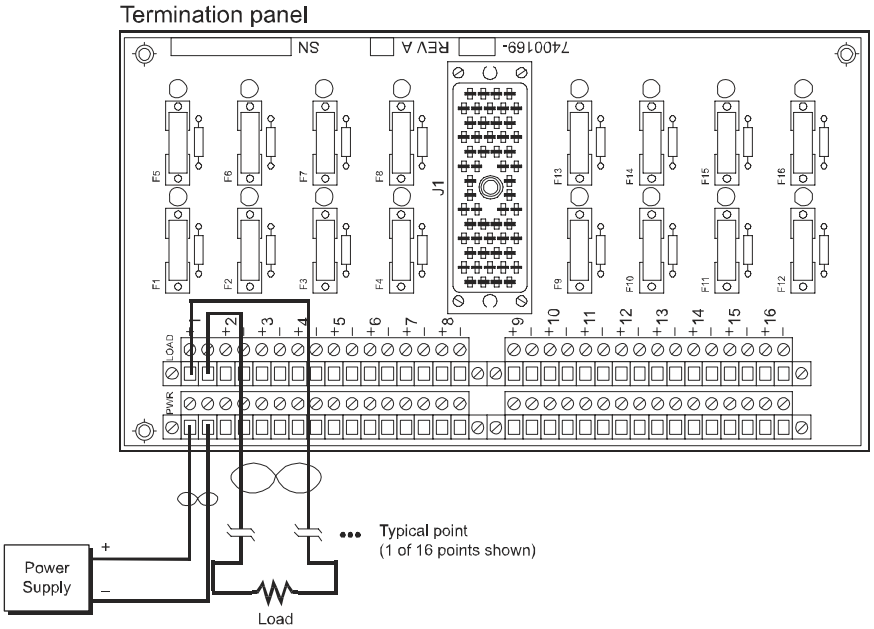

Figure 94 Field Wiring for 9661-110 with a 3601E Module

Simplified Schematics

This is a simplified schematic of a typical 16-point non-commoned digital output module with a non-commoned digital output panel (1 of 16 points shown).

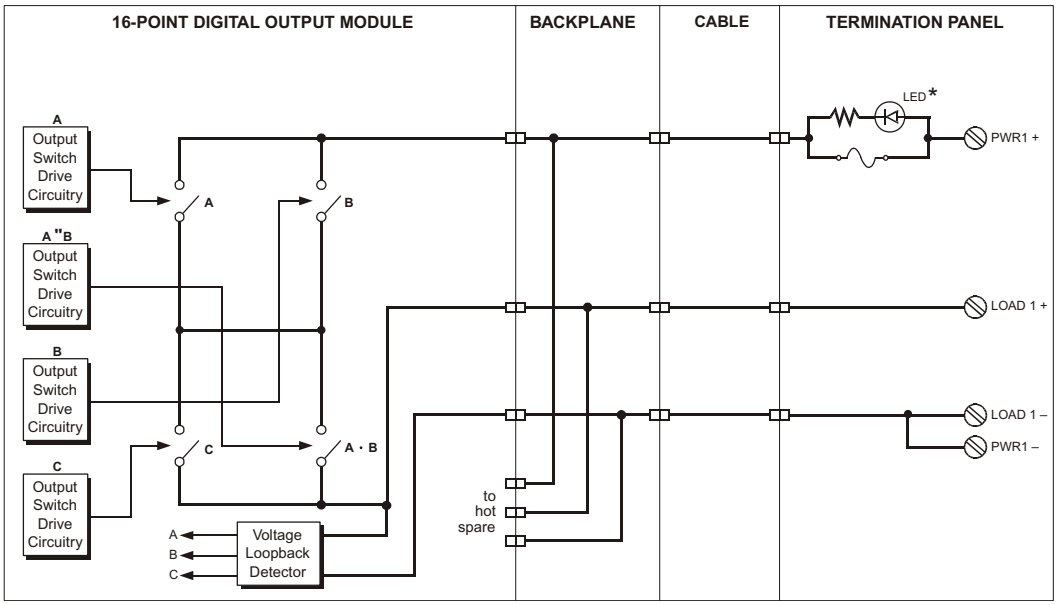

* LEDs are blown-fuse indicators

Figure 95 Simplified Schematic of a 3601E DO Module with a Non-Commoned DO Panel

9662-110 (24 VDC, non-commoned, 16 pts.)

Termination panel 9662–110 is compatible with 24 VDC digital output modules and has:

- 16 LOAD+ and LOAD– terminals
- 16 PWR+ and PWR– terminals
- 16 fuses with blown-fuse indicators

Specifications

This table describes specifications for 9662–110.

Table 81 Specifications for Term Panel 9662-110

Feature	Description
Panel type	Non-commoned
Points	16

Compatible Modules

This table describes digital output modules compatible with 9662–110.

Table 82 Modules Compatible with 9662-110

Module Part Number	Points per Module	Module Description	Fuse
3604E	16	24 VDC, non-commoned, opto-isolated, TMR	2.5A, fast

Field Wiring Diagrams

This figure illustrates how to connect a 16-point digital output module and a 9662–110 to the field (1 of 16 points shown).

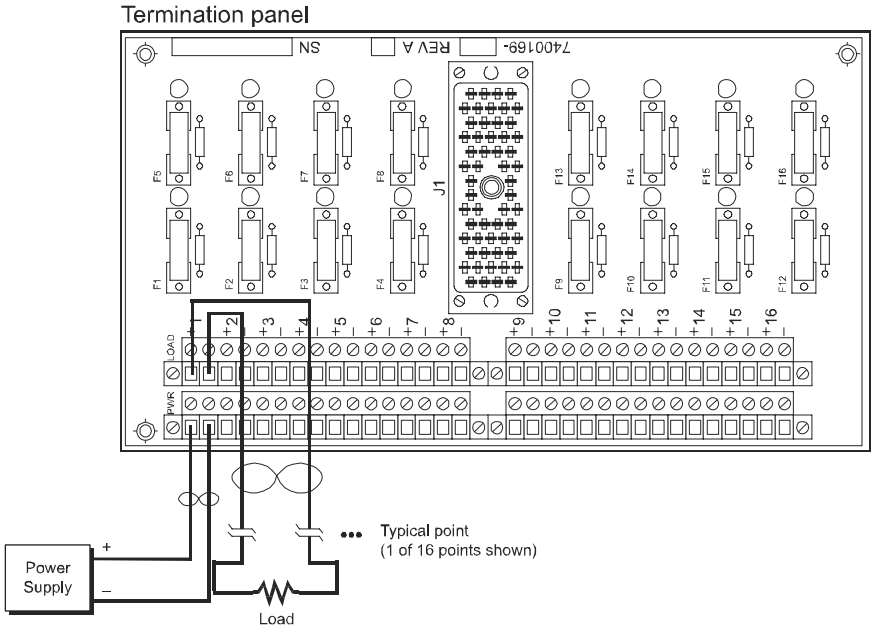

Figure 96 Field Wiring for 9662-110 with a 3604E Module

Simplified Schematics

This is a simplified schematic of a typical 16-point non-commoned digital output module with a non-commoned digital output panel (1 of 16 points shown).

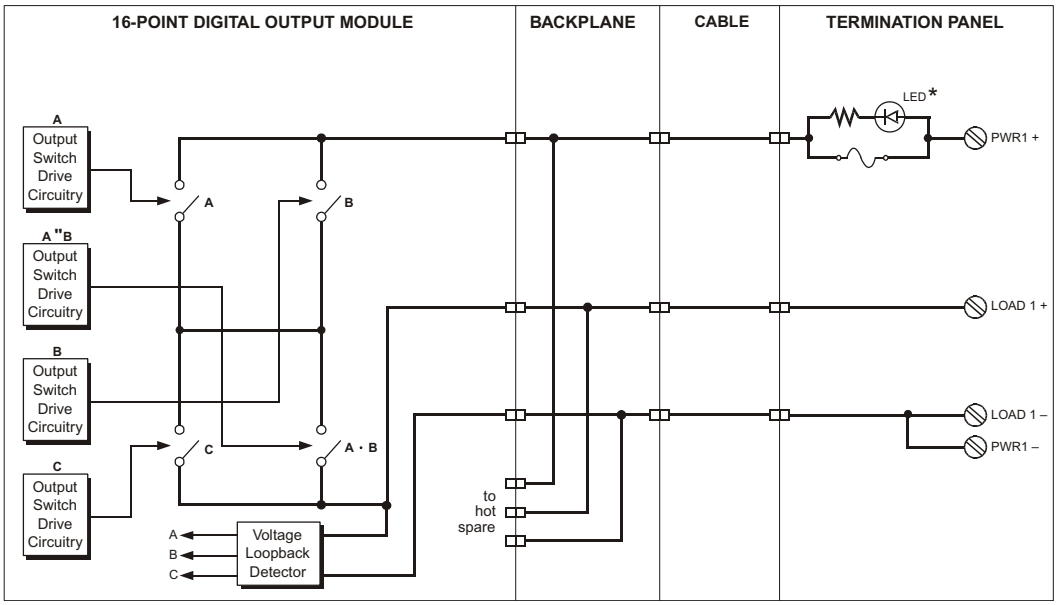

* LEDs are blown-fuse indicators

Figure 97 Simplified Schematic of a 3604E DO Module with a Non-Commoned DO Panel

9664-110 (115 VAC, non-commoned, 16 pts.)

Termination panel 9664–110 is compatible with 115 VAC digital output modules and has:

- 16 LOAD+ and LOAD– terminals
- 16 PWR+ and PWR– terminals
- 16 fuses with blown-fuse indicators

Specifications

This table describes specifications for 9664–110.

Table 83 Specifications for Term Panel 9664-110

Feature	Description
Panel type	Non-commoned
Points	16

Compatible Modules

This table describes digital output modules compatible with 9664–110.

Table 84 Modules Compatible with 9664-110

Module Part Number	Points per Module	Module Description	Fuse
3601E	16	115 VAC, non-commoned, opto-isolated, TMR	3A, fast
3601T	16	115 VAC, non-commoned, opto-isolated, TMR	3A, fast

Field Wiring Diagrams

This figure illustrates how to connect a 16-point digital output module and a 9664–110 to the field (1 of 16 points shown).

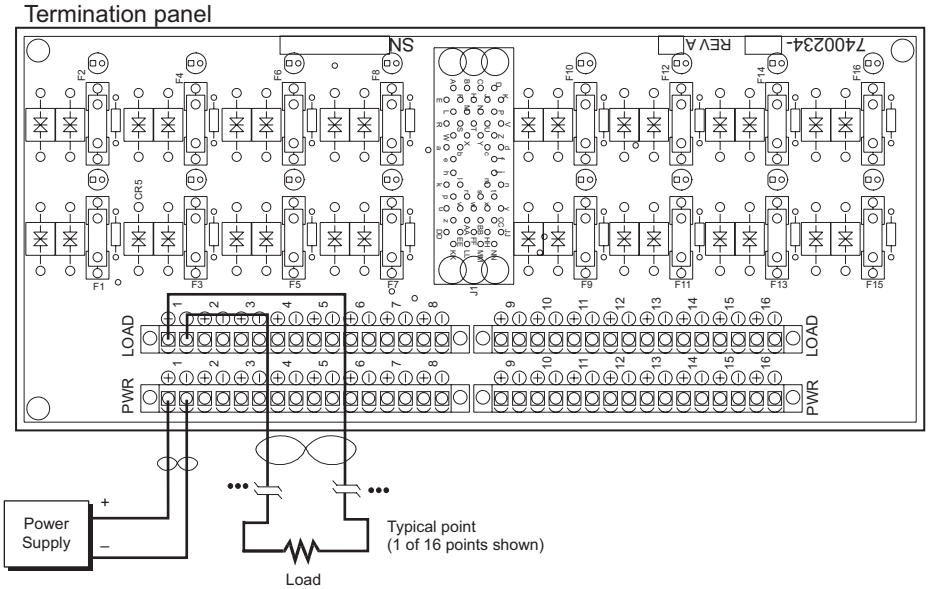

Figure 98 Field Wiring for 9664-110 with a 3601E or 3601T Module

Simplified Schematics

This is a simplified schematic of a typical 16-point non-commoned digital output module with a non-commoned digital output panel (1 of 16 points shown).

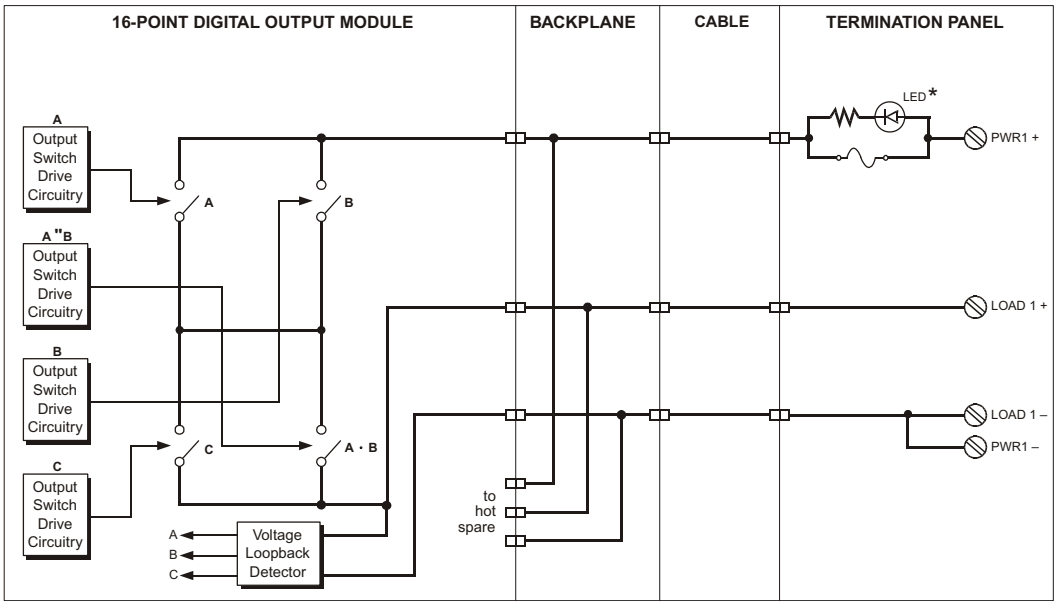

* LEDs are blown-fuse indicators

Figure 99 Simplified Schematic of a 3601E or 3601T DO Module with a Non-Commoned DO Panel

9667-110 (48 VDC, non-commoned, 16 pts.)

Termination panel 9667–110 is compatible with 48 VDC digital output modules and has:

- 16 LOAD+ and LOAD– terminals
- 16 PWR+ and PWR– terminals
- 16 fuses with blown-fuse indicators

Specifications

This table describes specifications for 9667–110.

Table 85 Specifications for Term Panel 9667-110

Feature	Description
Panel type	Non-commoned
Points	16

Compatible Modules

This table describes digital output modules compatible with 9667–110.

Table 86 Modules Compatible with 9667-110

Module Part Number	Points per Module	Module Description	Fuse
3607E	16	48 VDC, non-commoned, opto-isolated, TMR	1.25A, fast

Field Wiring Diagrams

This figure illustrates how to connect a 16-point digital output module and a 9667–110 to the field (1 of 16 points shown).

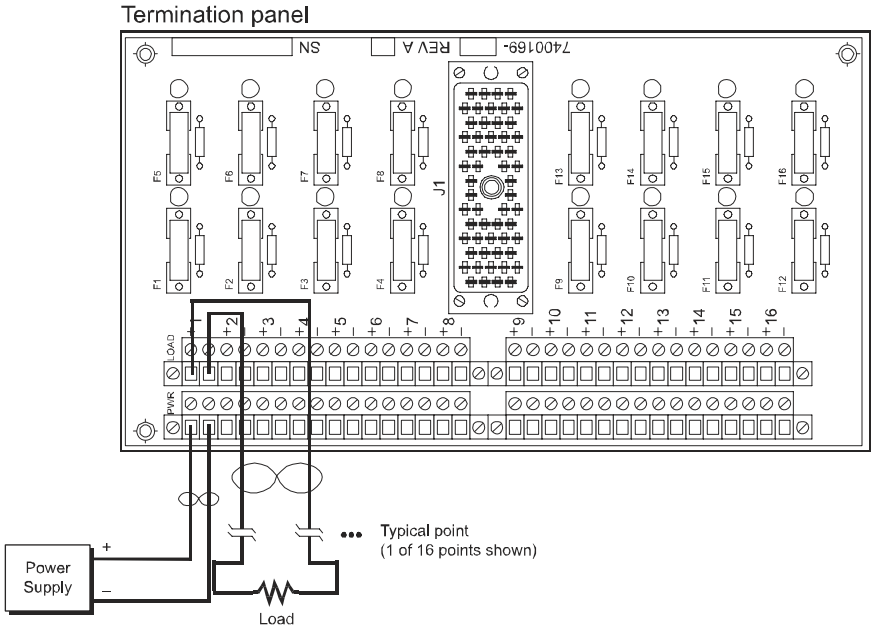

Figure 100 Field Wiring for 9667-110 with a 3607E Module

Simplified Schematics

This is a simplified schematic of a typical 16-point non-commoned digital output module with a non-commoned digital output panel (1 of 16 points shown).

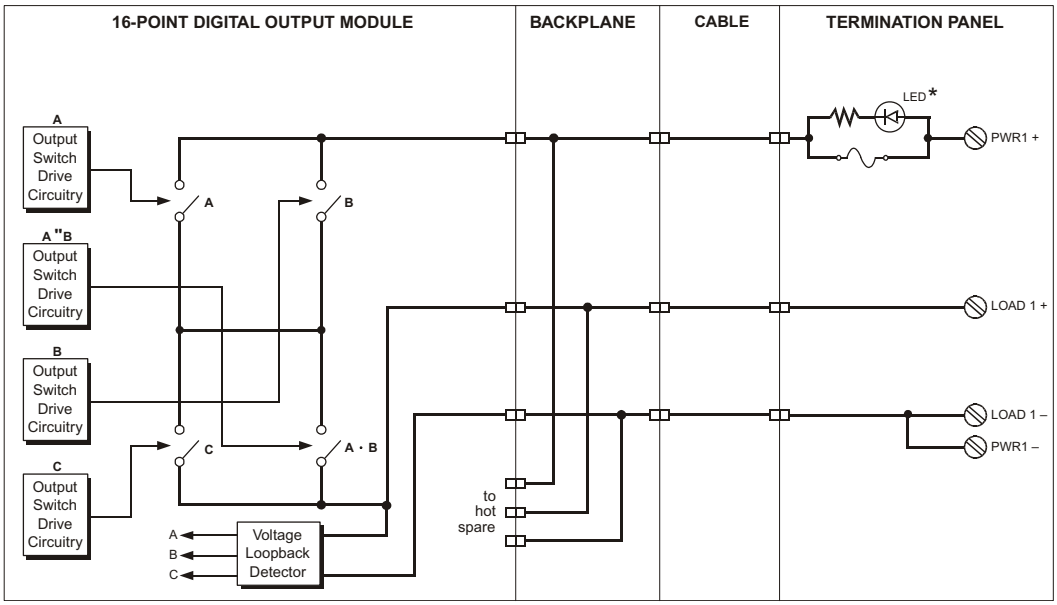

* LEDs are blown-fuse indicators

Figure 101 Simplified Schematic of a 3607E DO Module with a Non-Commoned DO Panel

9668-110 (non-commoned relay output, 16 pts.)

Termination panel 9668–110 is a non-commoned relay output panel and has:

- 16 LOAD+ and LOAD– terminals
- 16 PWR+ and PWR– terminals
- 16 fuses

The modules compatible with 9668-110 have 32-points, which means that you must use two term panels for each relay output module. Each term panel comes with two sets of labels: 1-16 and 17-32. For information on how to apply the labels, see Appendix F, Panel Labels.

Specifications

This table describes specifications for 9668–110.

Table 87 Specifications for Term Panel 9668-110

Feature	Description
Panel type	Non-commoned relay output
Points	16

Compatible Modules

This table describes relay output modules compatible with 9668–110.

Table 88 Modules Compatible with 9668-110

Module Part Number	Points per Module	Module Description	Fuse
3636R	32	Non-commoned, simplex, normally open, galvanically-isolated	2.5A, fast
3636T	32	Non-commoned, simplex, normally open, galvanically-isolated	2.5A, fast

Field Wiring Diagrams

This figure illustrates how to connect a 32-point relay output module and a 9668–110 to the field (1 of 32 points shown).

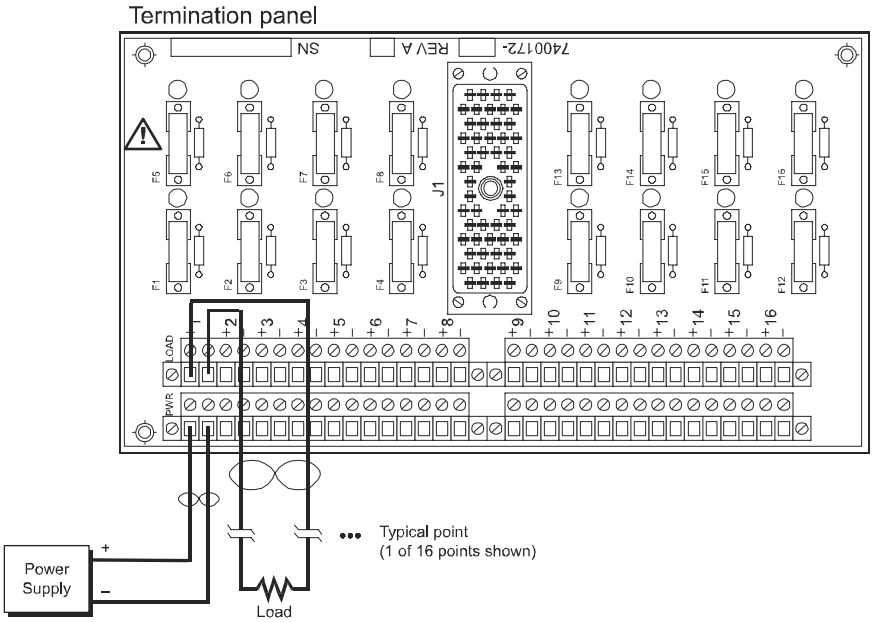

Figure 102 Field Wiring for 9668-110 with a 3636R or 3636T Relay Output Module

Simplified Schematics

This is a simplified schematic of a typical 32-point non-commoned relay output module with a non-commoned relay output panel (1 of 32 points shown).

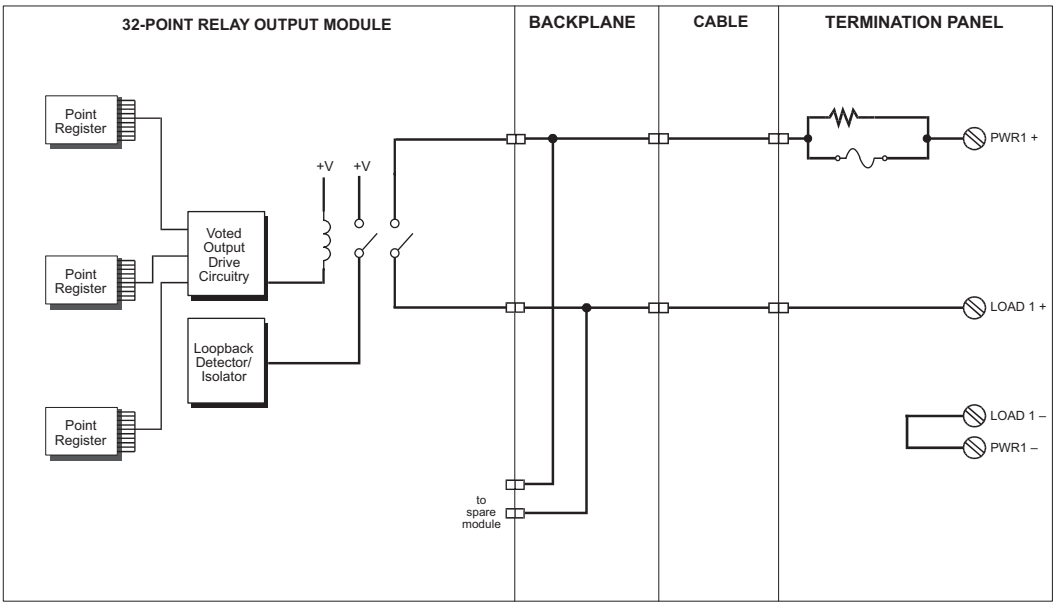

Figure 103 Simplified Schematic of a 3636R or 3636T Relay Output Module with a Non-Commoned Relay Output Panel

Basic Digital Output Term Panels

This section describes basic digital output term panels.

Model numbers of these term panels are:

- 9651-110 (basic digital/relay output, 16 pts.)
- 9652-610 (48 VDC, basic, 16 pts.)
- 9653-610 (24 VDC, basic, 16 pts.)

This figure represents a typical 16-point basic digital output/relay output termination panel.

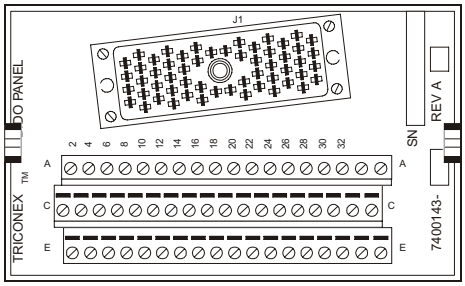

Figure 104 Typical 16-Point Basic DO and Relay Output Term Panel

9651-110 (basic digital/relay output, 16 pts.)

Termination panel 9651-110 has:

- 16 digital output terminals (LOAD)
- 16 power terminals (PWR)
- 16 return terminals (RTN)

Termination panel 9651-110 is compatible with:

- 115 VAC, 16-point digital output modules
- 120 VDC, 16-point digital output modules
- 32-point relay output modules

Note When using 32-point modules, you must use two term panels for each relay output module.

When using modules that are not self-protected, it is up to you to provide protection for all outpoint points.

Specifications

This table describes specifications for 9651–110.

Table 89 Specifications for Term Panel 9651-110

Feature	Description
Panel type	Basic digital output and basic relay output
Points	16

Compatible Modules

This table describes digital output modules and relay output modules compatible with 9651–110.

Table 90 Modules Compatible with 9651-110

Module Part Number	Points per Module	Module Description
3601E	16	115 VAC, non-commoned, opto-isolated, TMR
3603E	16	120 VDC, commoned, opto-isolated, TMR
3623	16	120 VDC, commoned, supervised, opto-isolated, TMR
3636R	32	Non-commoned, simplex, normally open, galvanically-isolated
3636T	32	Non-commoned, simplex, normally open, galvanically-isolated

Field Wiring Diagrams

This figure illustrates how to connect a 16-point digital output module and a 9651–110 to the field (1 of 16 points shown).

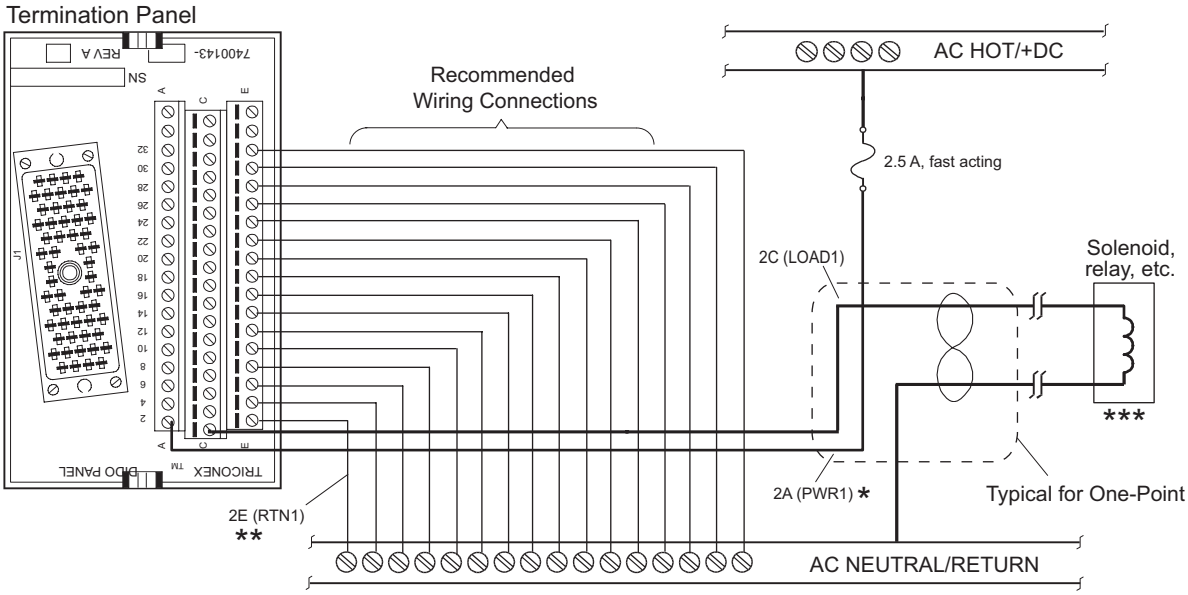

* One PWR connection per point is recommended.

** One RTN connection per point is recommended.

*** To prevent missing-load alarm, install a load at each unused point.
If a field load is not available for model 3623, install a 2.2k ohm, 10 W load resistor.

Figure 105 Field Wiring for 9651-110 with a 3601E, 3603E, or 3623 DO Module

This figure illustrates how to connect a 32-point relay output module and a 9651–110 to the field (1 of 32 points shown).

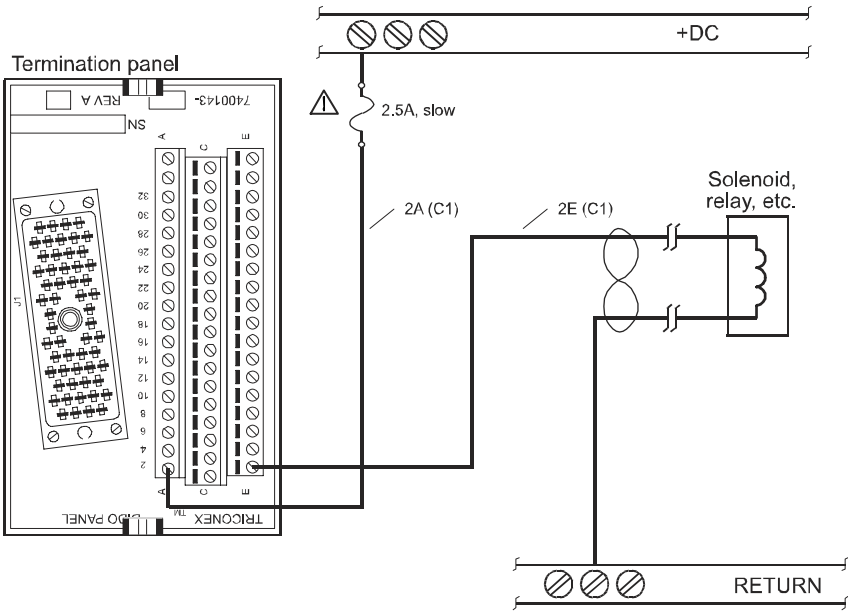

* When switching reactive loads, de-rate the output switching power to 25% of maximum (500 VA for AC applications, 37.5 W for DC applications.) When switching incandescent lamps, use the inrush current when calculating the required output switching power. For specifications, contact the lamp manufacturer. The inrush current may be 10–15 times the rated nominal load current of the lamp.

Figure 106 Field Wiring for 9651-110 with a 3636R or 3636T Relay Output Module

Simplified Schematics

This is a simplified schematic of a typical 16-point non-commoned digital output module with a basic digital output panel (1 of 16 points shown).

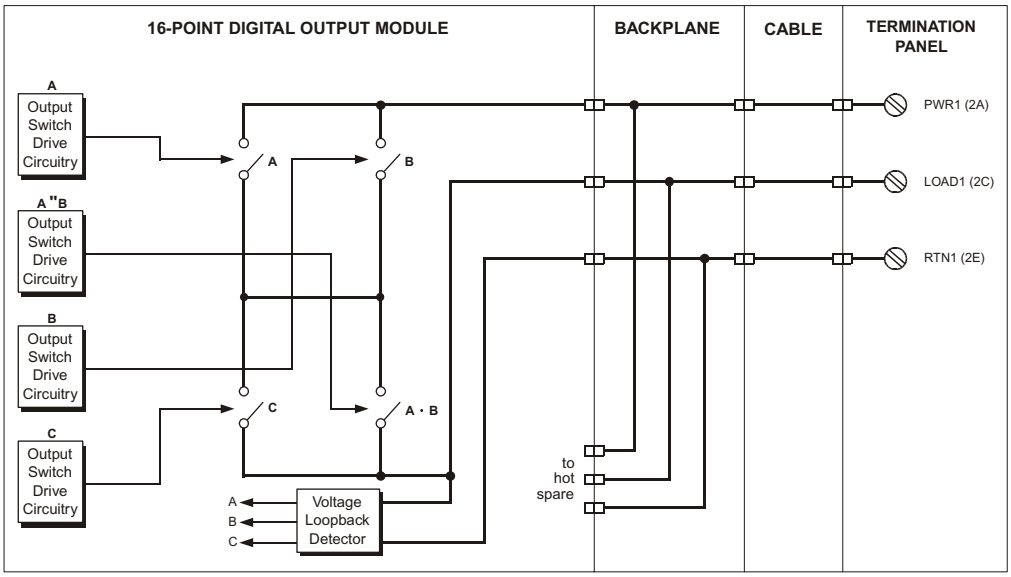

Figure 107 Simplified Schematic of a 3601E DO Module with a Basic DO Panel

This is a simplified schematic of a typical 16-point commoned digital output module with a basic digital output panel (1 of 16 points shown).

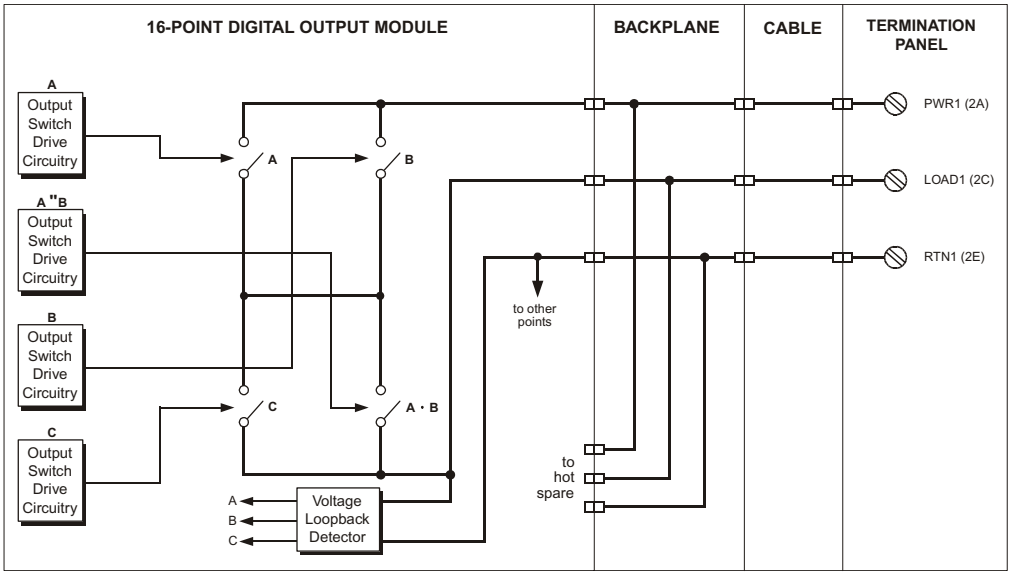

Figure 108 Simplified Schematic of a 3603E DO Module with a Basic DO Panel

This is a simplified schematic of a typical 16-point commoned supervised digital output module with a basic digital output panel (1 of 16 points shown).

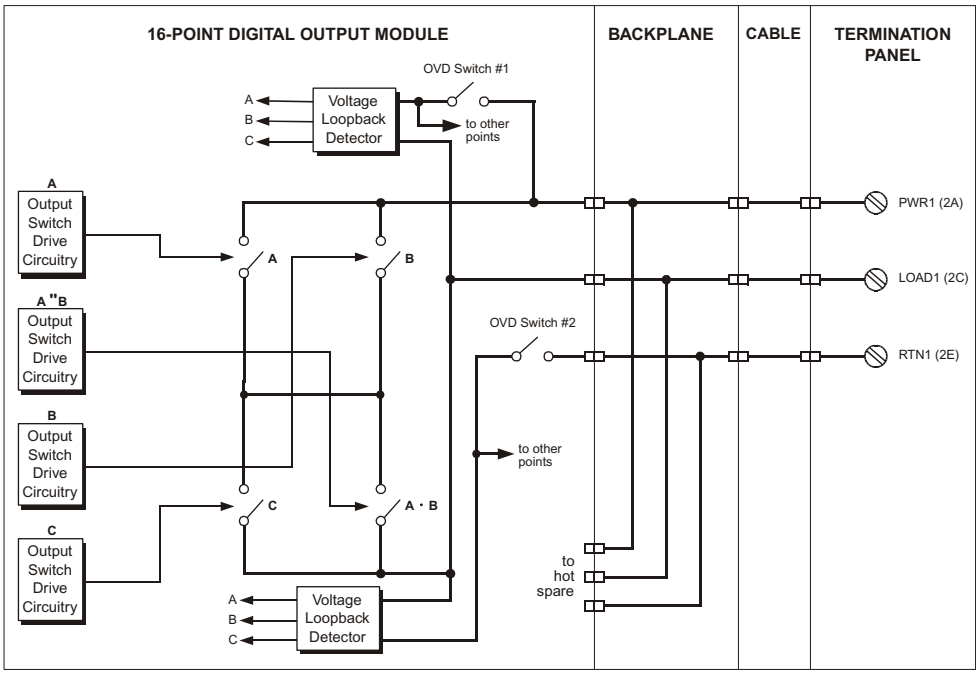

Figure 109 Simplified Schematic of a 3623 DO Module with a Basic DO Panel

This is a simplified schematic of a typical 32-point relay output module with a basic digital output panel (1 of 32 points shown).

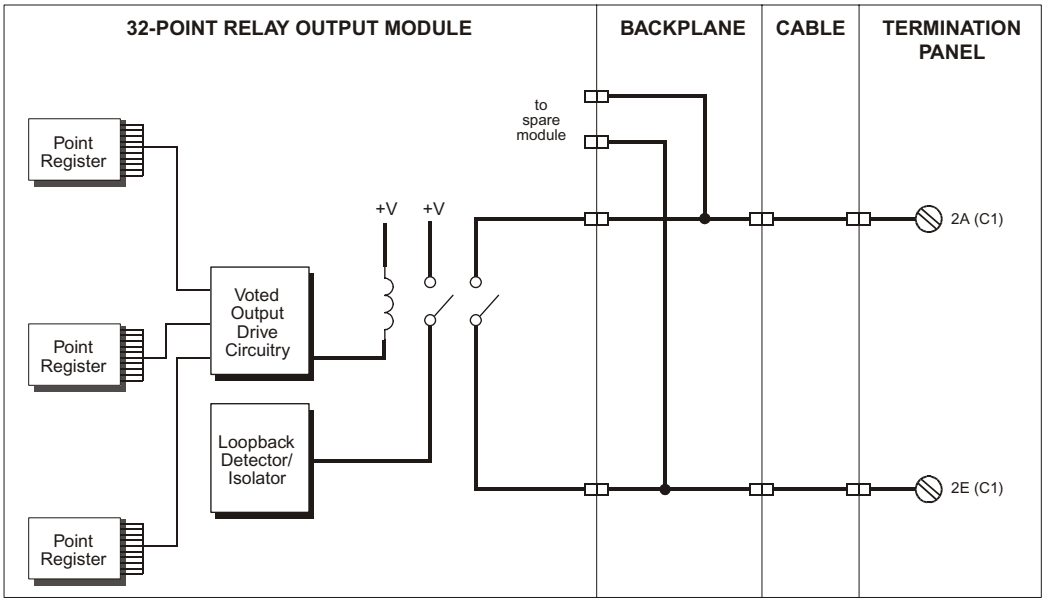

Figure 110 Simplified Schematic of a 3636R or 3636T Relay Output Module with a Basic DO Panel

9652-610 (48 VDC, basic, 16 pts.)

Termination panel 9652–610 is compatible with 48 VDC digital output modules and has:

- 16 digital output terminals (LOAD)
- 16 power terminals (PWR)
- 16 return terminals (RTN)

Note When using modules that are not self-protected, such as the 3607E, it is up to you to provide protection for all outpoint points.

Specifications

This table describes specifications for 9652–610.

Table 91 Specifications for Term Panel 9652-610

Feature	Description
Panel type	Basic digital output
Points	16

Compatible Modules

This table describes digital output modules compatible with 9652–610.

Table 92 Modules Compatible with 9652-610

Module Part Number	Points per Module	Module Description
3607E	16	48 VDC, non-commoned, opto-isolated, TMR

Field Wiring Diagrams

This figure illustrates how to connect a 16-point digital output module and a 9652–610 to the field (1 of 16 points shown).

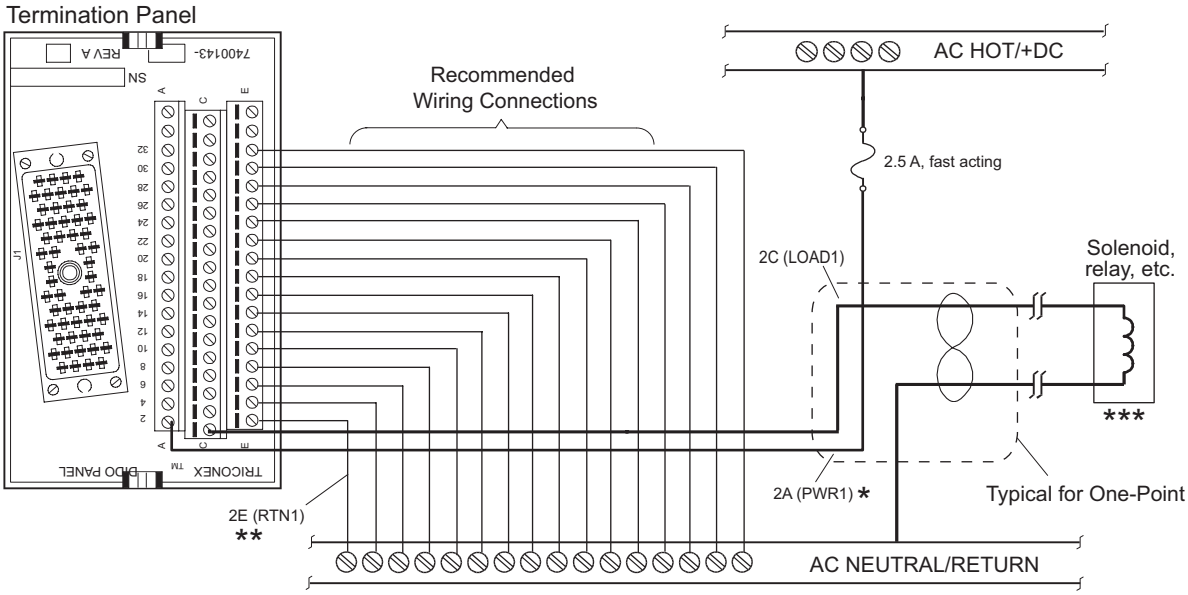

* One PWR connection per point is recommended.

** One RTN connection per point is recommended.

*** To prevent missing-load alarm, install a load at each unused point.

Figure 111 Field Wiring for 9652-610 with a 3607E DO Module

Simplified Schematics

This is a simplified schematic of a typical 16-point non-commoned digital output module with a basic digital output panel (1 of 16 points shown).

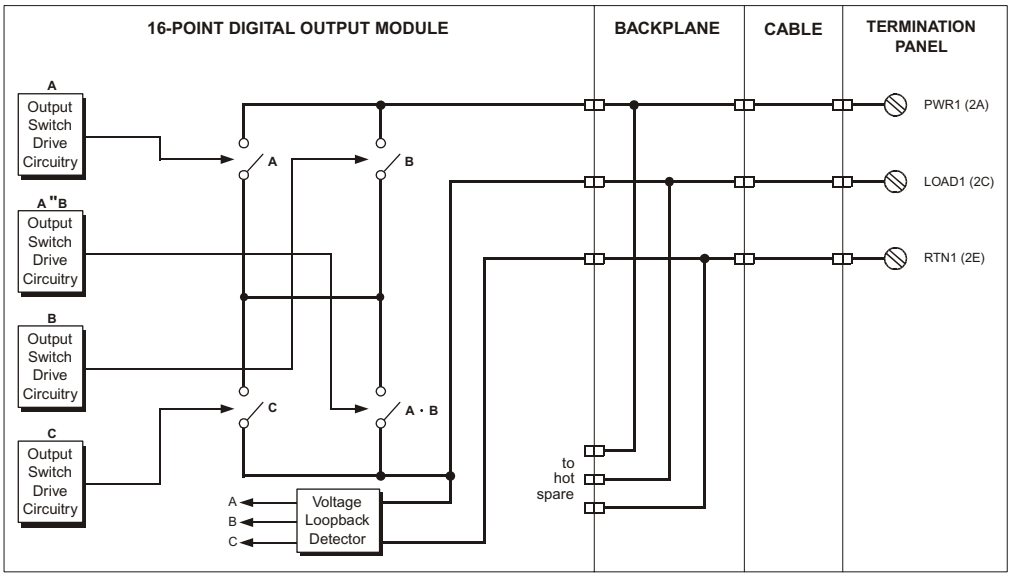

Figure 112 Simplified Schematic of a 3607E DO Module with a Basic DO Panel

9653-610 (24 VDC, basic, 16 pts.)

Termination panel 9653–610 is compatible with 24 VDC digital output modules and has:

- 16 digital output terminals (LOAD)
- 16 power terminals (PWR)
- 16 return terminals (RTN)

When using 32-point modules, you must use two term panels for each relay output module.

When using modules that are not self-protected, such as the 3604E, it is up to you to provide protection for all outpoint points. Modules 3624, 3625, 3664, and 3674 have built-in protection.

Specifications

This table describes specifications for 9653–610.

Table 93 Specifications for Term Panel 9653-610

Feature	Description
Panel type	Basic digital output
Points	16

Compatible Modules

This table describes digital output modules compatible with 9653–610.

Table 94 Modules Compatible with 9653-610

Module Part Number	Points per Module	Module Description
3604E	16	24 VDC, non-commoned, opto-isolated, TMR
3624	16	24 VDC, commoned, supervised, opto-isolated, self-protected, TMR
3625	32	24 VDC, commoned, supervised/non-supervised, opto-isolated, self-protected, TMR
3664	32	24 VDC, commoned, opto-isolated, self-protected, dual
3674	32	24 VDC, commoned, opto-isolated, self-protected, dual

Field Wiring Diagrams

This figure illustrates how to connect a 16-point digital output module and a 9653–610 to the field (1 of 16 points shown).

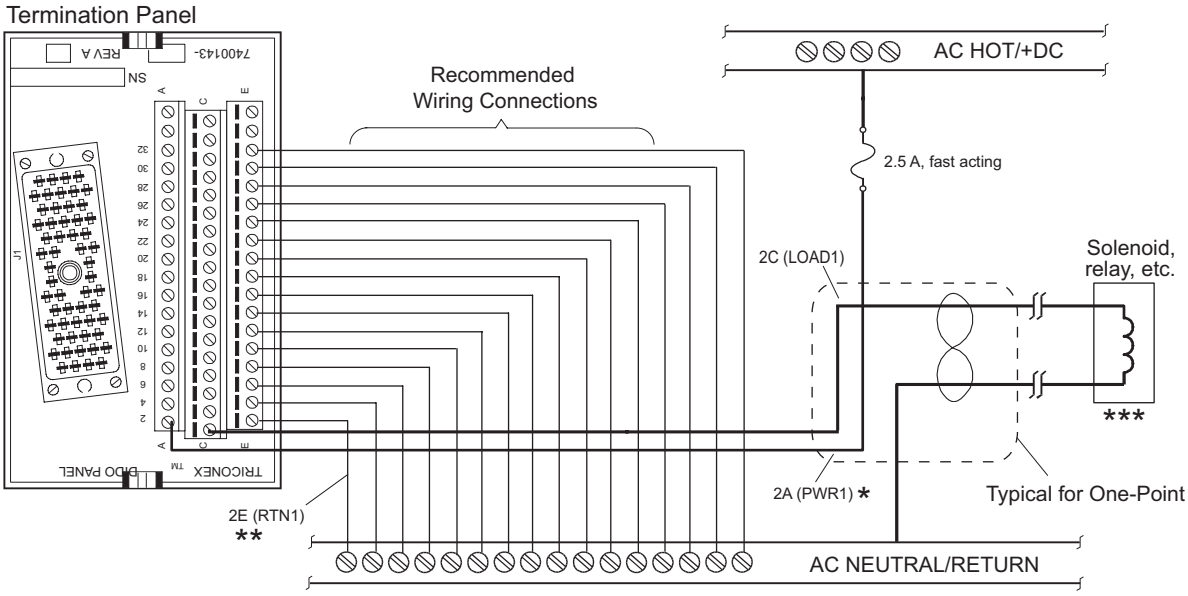

Figure 113 Field Wiring for 9653-610 with a 3604E DO Module

This figure illustrates how to connect a 16-point or 32-point digital output module with self-protection and a 9653–610 to the field (1 of 16 points shown).

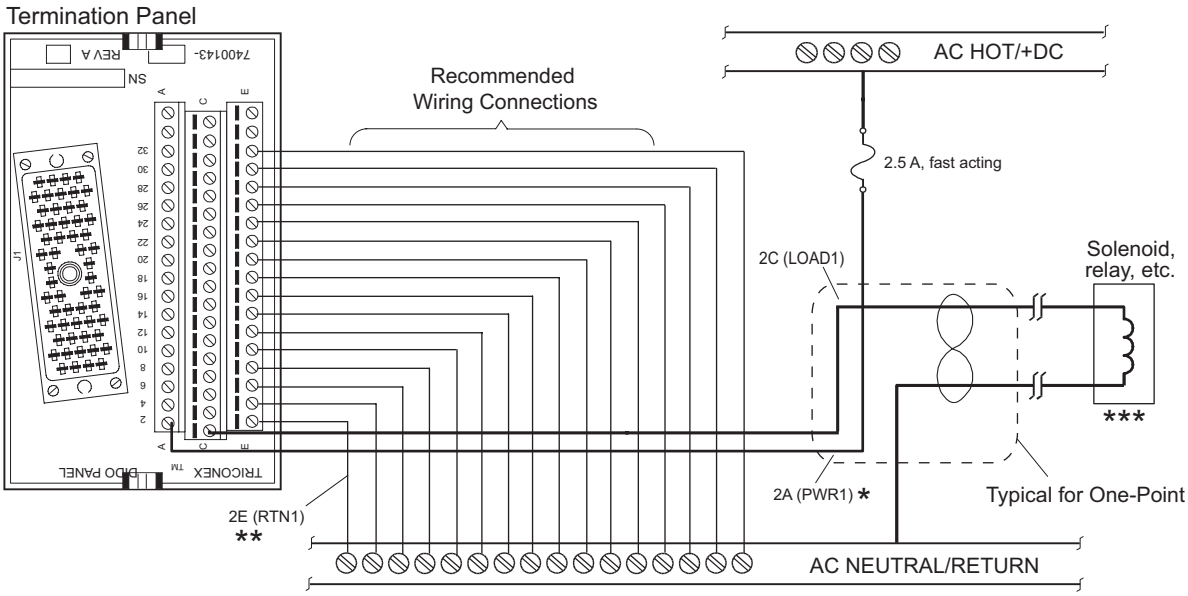

* One PWR connection per point is recommended.

** One RTN connection per point is recommended.

*** When using a 3624 module, install a load at each unused point to prevent missing-load alarm.

Figure 114 Field Wiring for 9653-610 with a 3624 or 3625 DO Module

This figure illustrates how to connect a 32-point dual digital output module with self-protection and a 9653–610 to the field (1 of 32 points shown).

CAUTION For proper operation, one PWR connection per point is required.

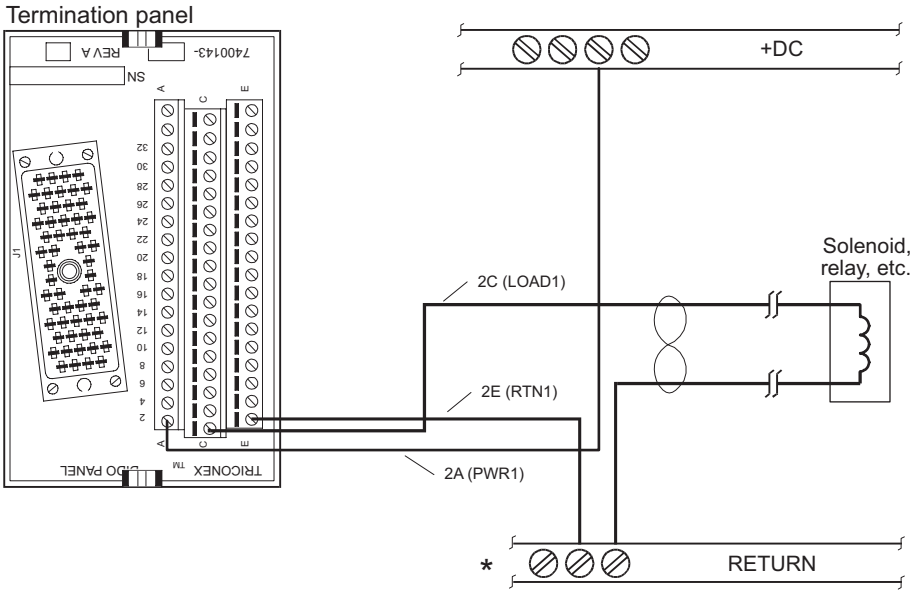

* One RTN connection is required. More than one is recommended.

Figure 115 Field Wiring for 9653-610 with a 3664 or 3674 DO Module

Simplified Schematics

This is a simplified schematic of a typical 16-point non-commoned digital output module with a basic digital output panel (1 of 16 points shown).

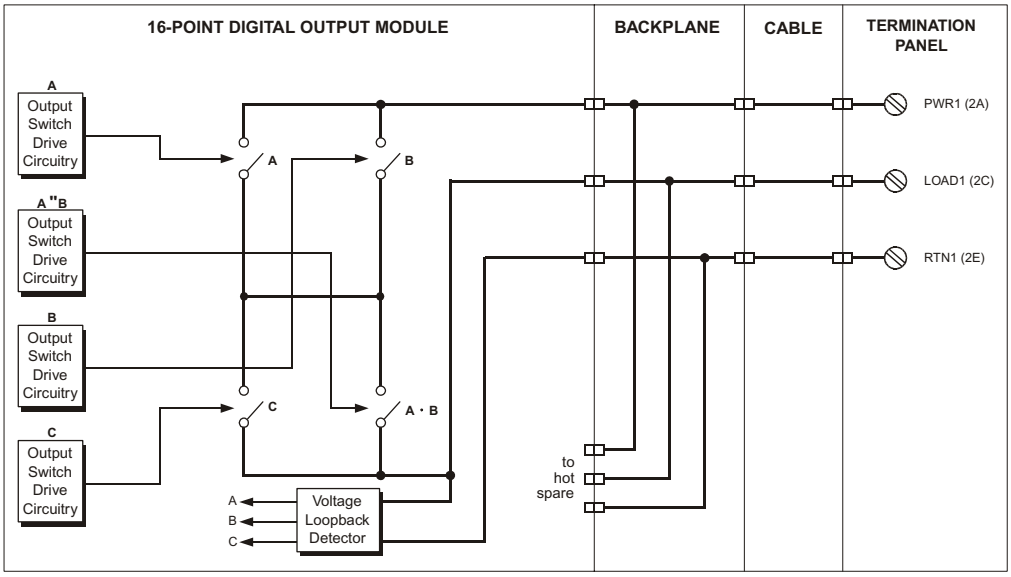

Figure 116 Simplified Schematic of a 3604E DO Module with a Basic DO Panel

This is a simplified schematic of a typical 16-point commoned supervised digital output module with a basic digital output panel (1 of 16 points shown).

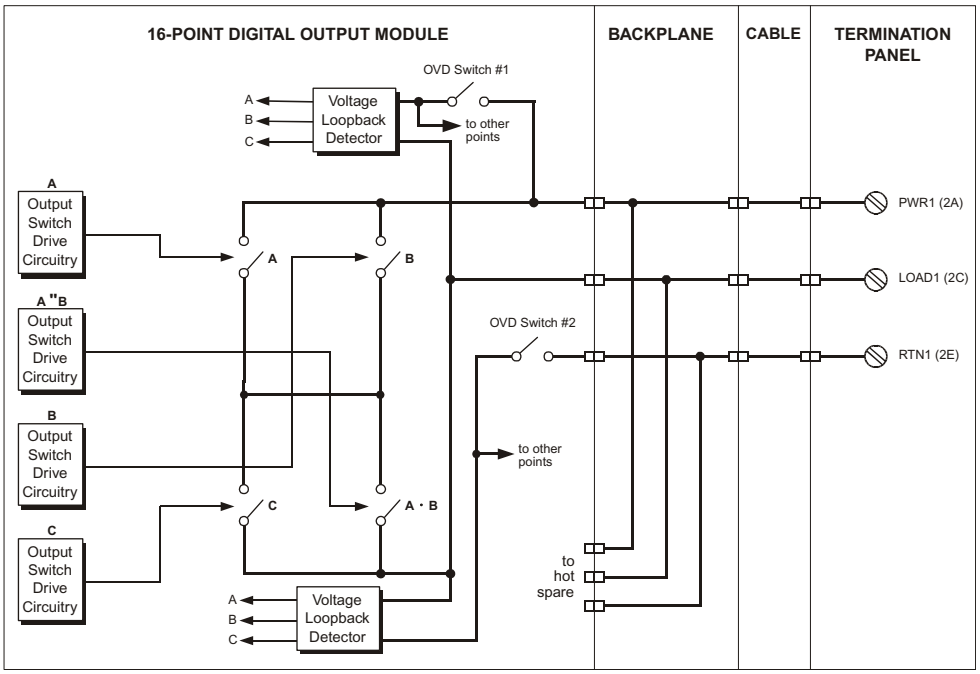

Figure 117 Simplified Schematic of a 3624 DO Module with a Basic DO Panel

This is a simplified schematic of a typical 32-point commoned supervised digital output module with a basic digital output panel (1 of 32 points shown).

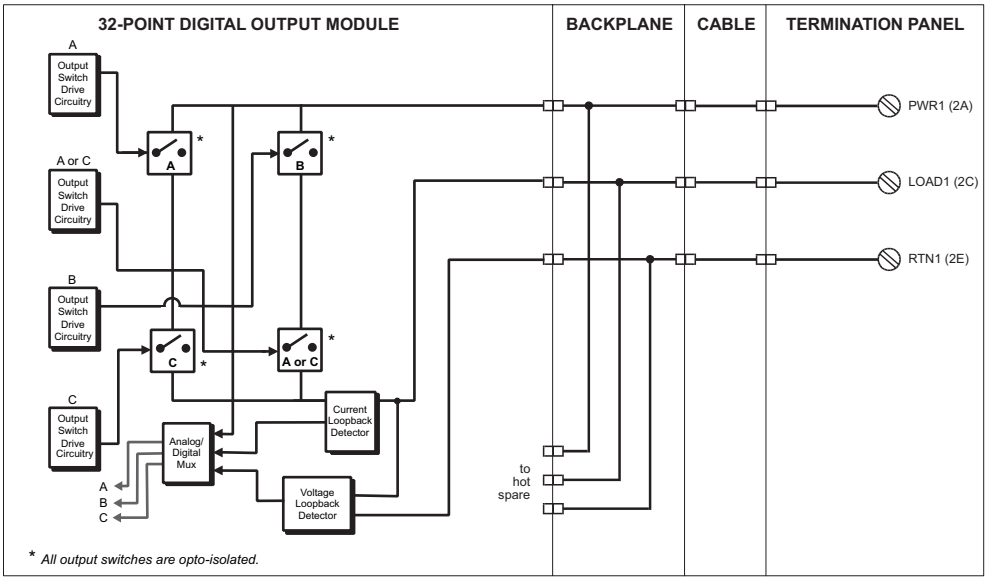

Figure 118 Simplified Schematic of a 3625 DO Module with a Basic DO Panel

This is a simplified schematic of a typical 32-point commoned dual digital output module with a basic digital output panel (1 of 32 points shown).

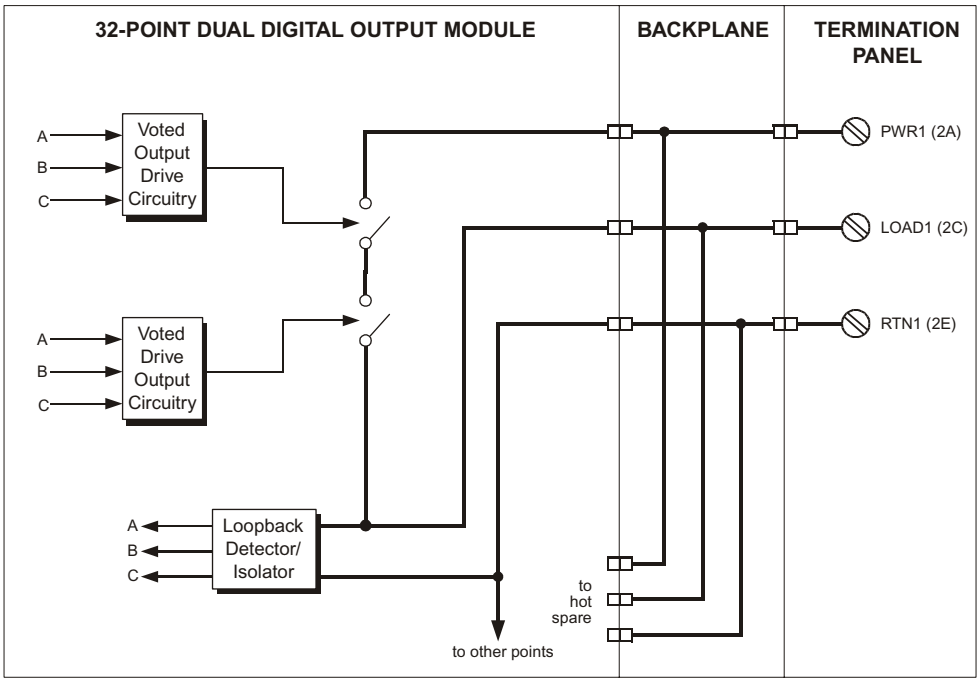

Figure 119 Simplified Schematic of a 3664 or 3674 DO Module with a Basic DO Panel

Commoned Interposing Relay Term Panels

This section describes commoned interposing relay termination panels. Model numbers of these panels are:

- 9670-610 (115 VAC, commoned interposing relay, 16 pts.)
- 9671-810 (24 VDC, commoned interposing relay, 16 pts.)
- 9672-810 (48 VDC, commoned interposing relay, 16 pts.)
- 9673-810 (120 VDC, commoned interposing relay, 16 pts.)

This figure represents a typical 16-point commoned interposing relay termination panel.

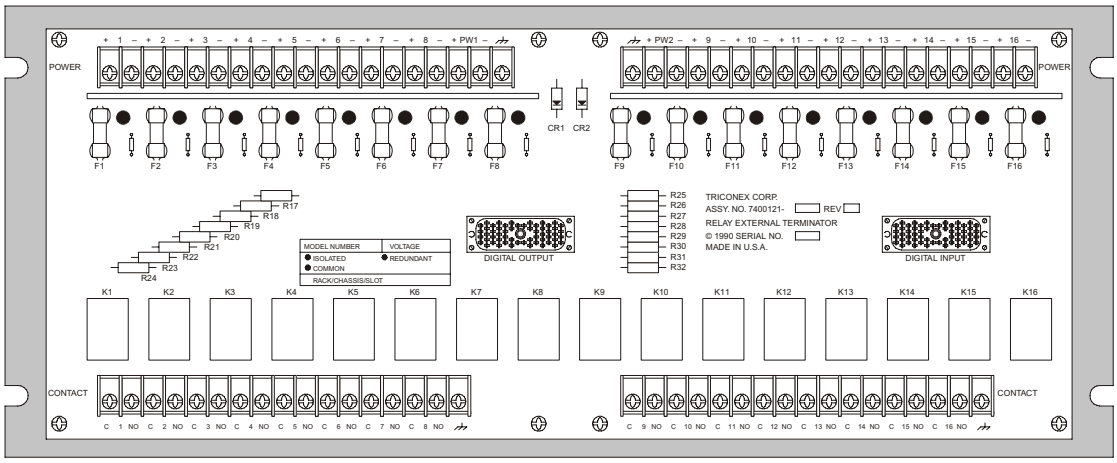

Figure 120 Typical 16-Point Commoned Interposing Relay Panel

For more description of interposing relay term panels, see Termination Panels with Interposing Relays on page 5.

9670-610 (115 VAC, commoned interposing relay, 16 pts.)

Termination panel 9670–610 is compatible with 115 VAC digital output modules and has:

- 16 relay points (C and NO)
- 2 terminals (PW1 + and –) for primary power and return
- 2 terminals (PW2 + and –) for redundant power and return
- An individual fuse with blown-fuse indicator for relay coil and loopback circuit

Each terminal accepts either #6 ring-lug terminals or 24-to-12-gauge (0.3mm^2 to 2.1mm^2) wires.

CAUTION Relay contacts are not protected by a fuse to allow maximum flexibility for the application. You must provide the necessary contact protection for your application.

Specifications

This table describes specifications for 9670–610.

Table 95 Specifications for Term Panel 9670-610

Feature	Description
Panel type	Commoned interposing relay
Points	16
Relay type	Compact, general-purpose power relays with hold-down clamps
Relay contact rating	10A @ 30 VDC or 277 VAC
Relay switching power (see CAUTION below)	AC: 2500 VA DC: 90 W
Relay maximum output cycle rate	Once per scan
Relay expected life at maximum rated load	100,000 operations
Relay isolation	1000 VAC minimum 1500 VDC minimum
Power consumption per relay	Less than 2 watts

CAUTION

When switching reactive loads, you should de-rate the switching power of the outputs to 25% of maximum (625 VA for AC applications or 22.5 watts for DC applications). When switching incandescent lamps, the inrush current can be 10 to 15 times the rated nominal load current of the lamp. Use the inrush current to calculate the required output switching power. Contact the lamp manufacturer for detailed specifications regarding inrush amplitude and duration.

Compatible Modules

This table describes digital output modules compatible with 9670–610.

Table 96 Modules Compatible with 9670-610

Module Part Number	Points per Module	Module Description	Fuse
3601E	16	115 VAC, non-commoned, opto-isolated, TMR	3A, fast

Field Wiring Diagrams

This figure illustrates how to connect a 16-point digital output module and a 9670–610 to the field (1 of 16 points shown).

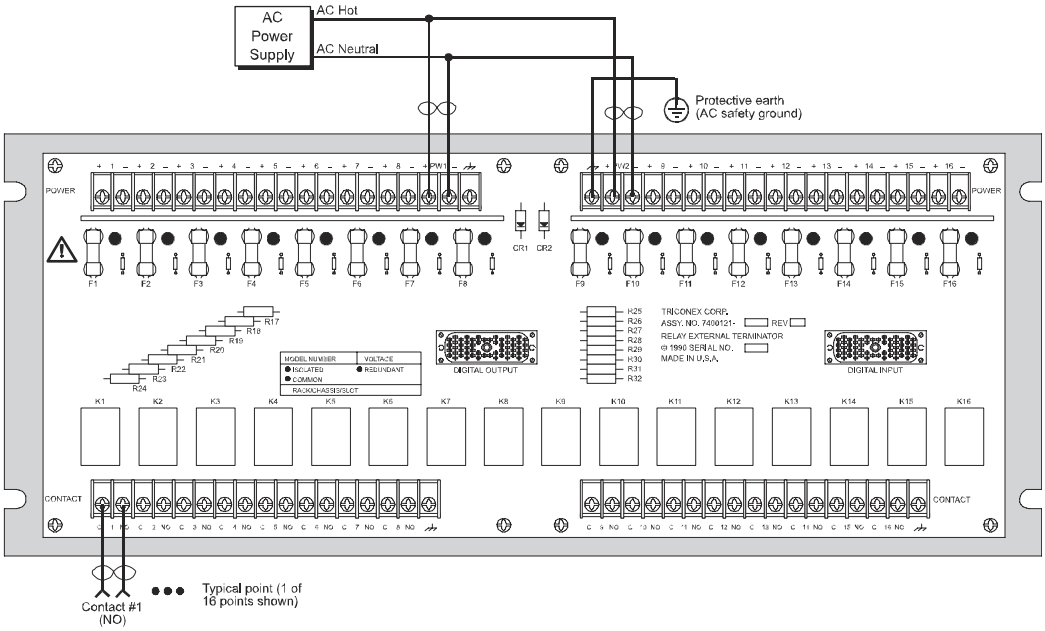

Figure 121 Field Wiring for 9670-610 with a 3601E DO Module

Simplified Schematics

This is a simplified schematic of a typical 16-point non-commoned digital output module with a commoned interposing relay panel (1 of 16 points shown).

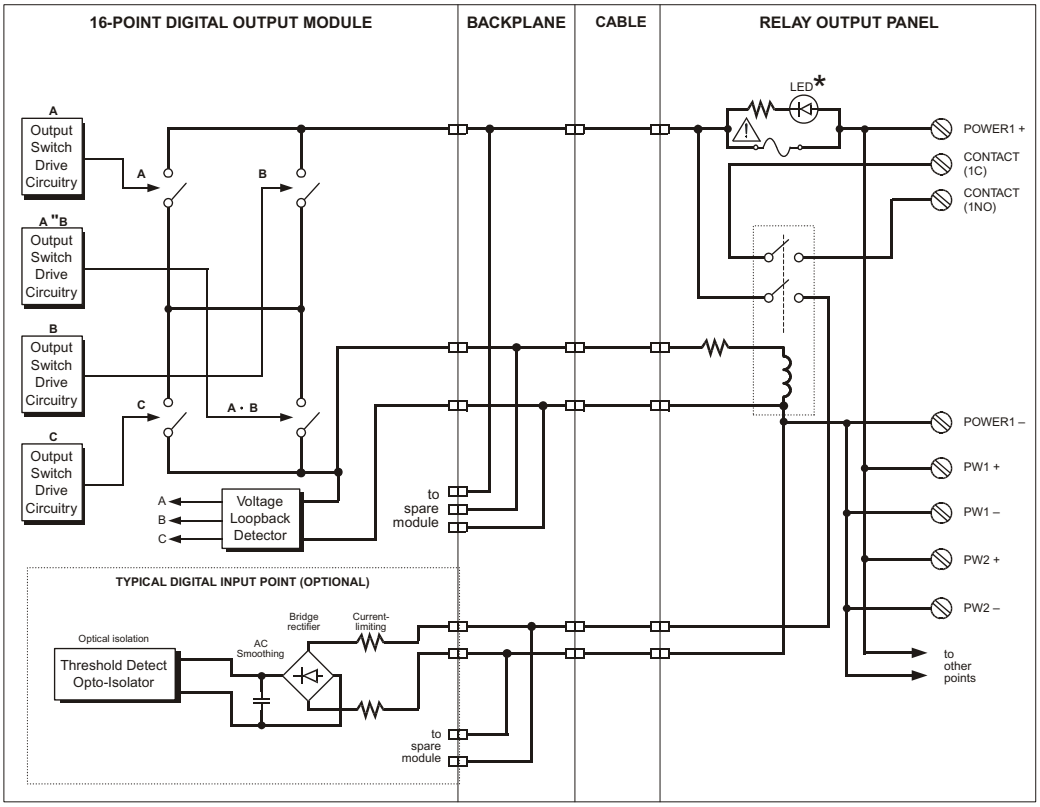

* LEDs are blown-fuse indicators

Figure 122 Simplified Schematic of a 3601E DO Module with a Commoned Interposing Relay Panel

9671-810 (24 VDC, commoned interposing relay, 16 pts.)

Termination panel 9671–810 is compatible with 24 VDC digital output modules and has:

- 16 relay points (C and NO)
- 2 terminals (PW1 + and –) for primary power and return
- 2 terminals (PW2 + and –) for redundant power and return
- An individual fuse with blown-fuse indicator for relay coil and loopback circuit

When using 32-point modules, you must use two term panels for each digital output module.

Each term panel comes with two sets of labels: 1-16 and 17-32. For information on how to apply the labels, see Appendix F, Panel Labels.

Each terminal accepts either #6 ring-lug terminals or 24-to-12-gauge (0.3mm^2 to 2.1mm^2) wires.

CAUTION

Relay contacts are not protected by a fuse to allow maximum flexibility for the application. You must provide the necessary contact protection for your application.

Specifications

This table describes specifications for 9671–810.

Table 97 Specifications for Term Panel 9671-810

Feature	Description
Panel type	Commoned interposing relay
Points	16
Relay type	Compact, general-purpose power relays with hold-down clamps
Relay contact rating	10A @ 30 VDC or 277 VAC
Relay switching power (see CAUTION below)	AC: 2500 VA DC: 90 W
Relay maximum output cycle rate	Once per scan
Relay expected life at maximum rated load	100,000 operations
Relay isolation	1000 VAC minimum 1500 VDC minimum
Power consumption per relay	Less than 2 watts

CAUTION

When switching reactive loads, you should de-rate the switching power of the outputs to 25% of maximum (625 VA for AC applications or 22.5 watts for DC applications). When switching incandescent lamps, the inrush current can be 10 to 15 times the rated nominal load current of the lamp. Use the inrush current to calculate the required output switching power. Contact the lamp manufacturer for detailed specifications regarding inrush amplitude and duration.

Compatible Modules

This table describes digital output modules compatible with 9671–810.

Table 98 Modules Compatible with 9671-810

Module Part Number	Points per Module	Module Description	Fuse
3604E	16	24 VDC, non-commoned, opto-isolated, TMR	2.5A, fast
3664	32	24 VDC, commoned, opto-isolated, self-protected, dual	2.5A, fast
3674	32	24 VDC, commoned, opto-isolated, self-protected, dual	2.5A, fast

Field Wiring Diagrams

This figure illustrates how to connect a 16-point or 32-point digital output module and a 9671-810 to the field (1 of 16 or 32 points shown).

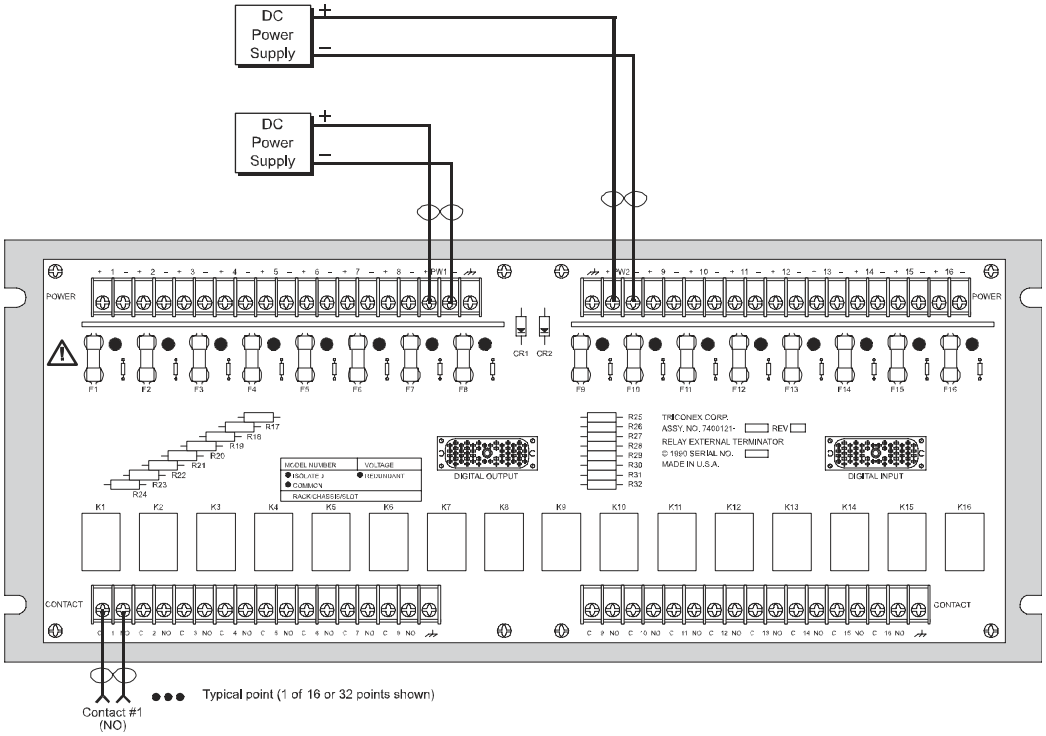

Figure 123 Field Wiring for 9671-810 with a 3604E, 3664, or 3674 DO Module

CAUTION Do not exceed 10 inch-pounds (1.13 Nm) of torque when securing leads to the #6 terminal.

Simplified Schematics

This is a simplified schematic of a typical 16-point DC digital output module with a commoned interposing relay panel (1 of 16 points shown).

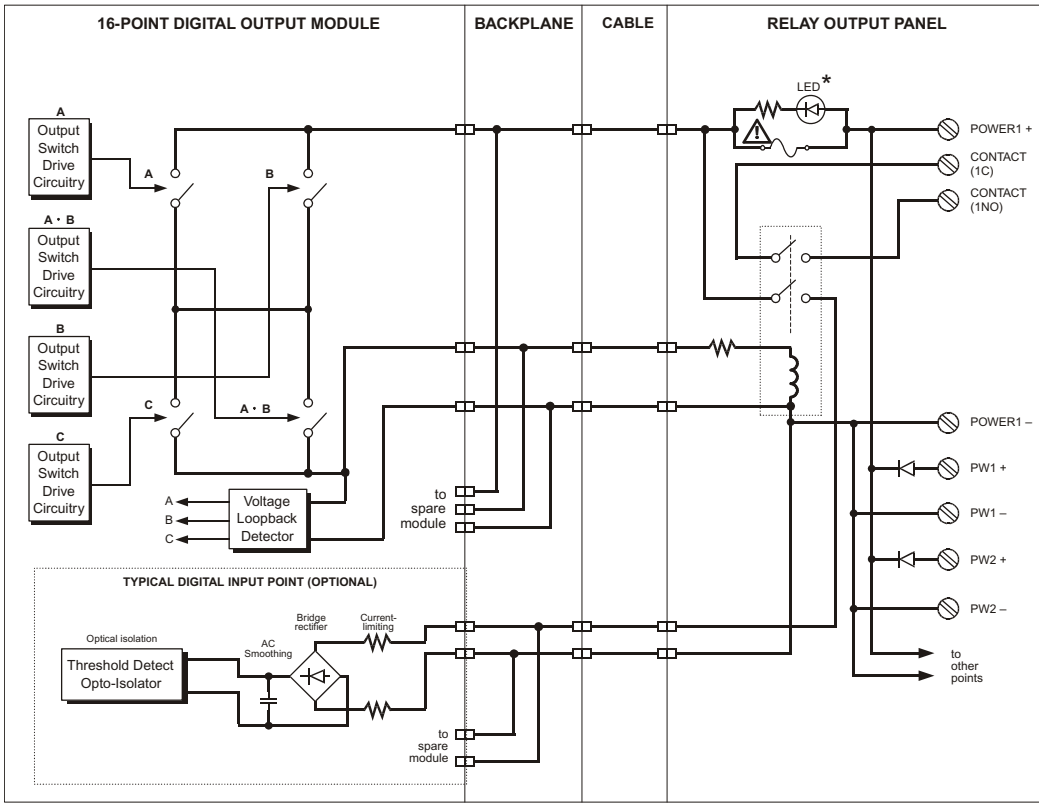

* LEDs are blown-fuse indicators

Figure 124 Simplified Schematic of a 3604E DO Module with a Commoned Interposing Relay Panel

This is a simplified schematic of a typical 32-point non-commoned digital output module with a commoned interposing relay panel (1 of 32 points shown).

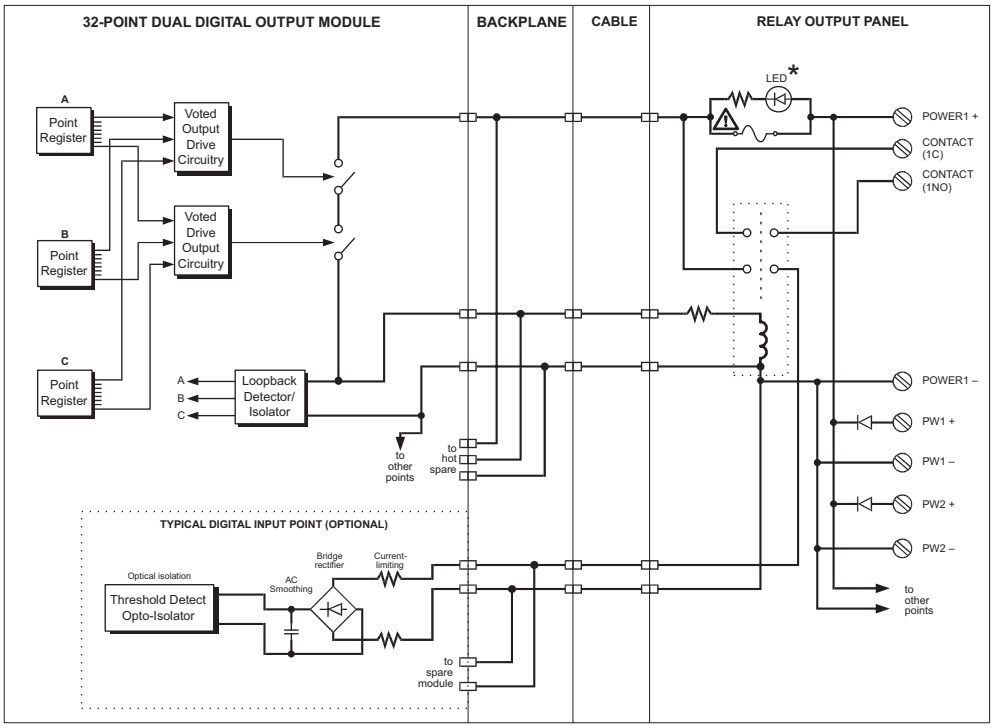

* LEDs will not turn on if fuses are removed because the 3664 and 3674 modules are self-protected and do not require fusing.

Figure 125 Simplified Schematic of a 3664 or 3674 DO Module with a Commoned Interposing Relay Panel

9672-810 (48 VDC, commoned interposing relay, 16 pts.)

Termination panel 9672–810 is compatible with 48 VDC digital output modules and has:

- 16 relay points (C and NO)
- 2 terminals (PW1 + and –) for primary power and return
- 2 terminals (PW2 + and –) for redundant power and return
- An individual fuse with blown-fuse indicator for relay coil and loopback circuit

Each terminal accepts either #6 ring-lug terminals or 24-to-12-gauge (0.3mm^2 to 2.1mm^2) wires.

CAUTION

Relay contacts are not protected by a fuse to allow maximum flexibility for the application. You must provide the necessary contact protection for your application.

Specifications

This table describes specifications for 9672–810.

Table 99 Specifications for Term Panel 9672-810

Feature	Description
Panel type	Commoned interposing relay
Points	16
Relay type	Compact, general-purpose power relays with hold-down clamps
Relay contact rating	10A @ 30 VDC or 277 VAC
Relay switching power (see CAUTION below)	AC: 2500 VA DC: 90 W
Relay maximum output cycle rate	Once per scan
Relay expected life at maximum rated load	100,000 operations
Relay isolation	1000 VAC minimum 1500 VDC minimum
Power consumption per relay	Less than 2 watts

CAUTION

When switching reactive loads, you should de-rate the switching power of the outputs to 25% of maximum (625 VA for AC applications or 22.5 watts for DC applications). When switching incandescent lamps, the inrush current can be 10 to 15 times the rated nominal load current of the lamp. Use the inrush current to calculate the required output switching power. Contact the lamp manufacturer for detailed specifications regarding inrush amplitude and duration.

Compatible Modules

This table describes digital output modules compatible with 9672–810.

Table 100 Modules Compatible with 9672-810

Module Part Number	Points per Module	Module Description	Fuse
3607E	16	48 VDC, non-commoned, opto-isolated, TMR	1.25A, fast

Field Wiring Diagrams

This figure illustrates how to connect a 16-point digital output module and a 9672–810 to the field (1 of 16 points shown).

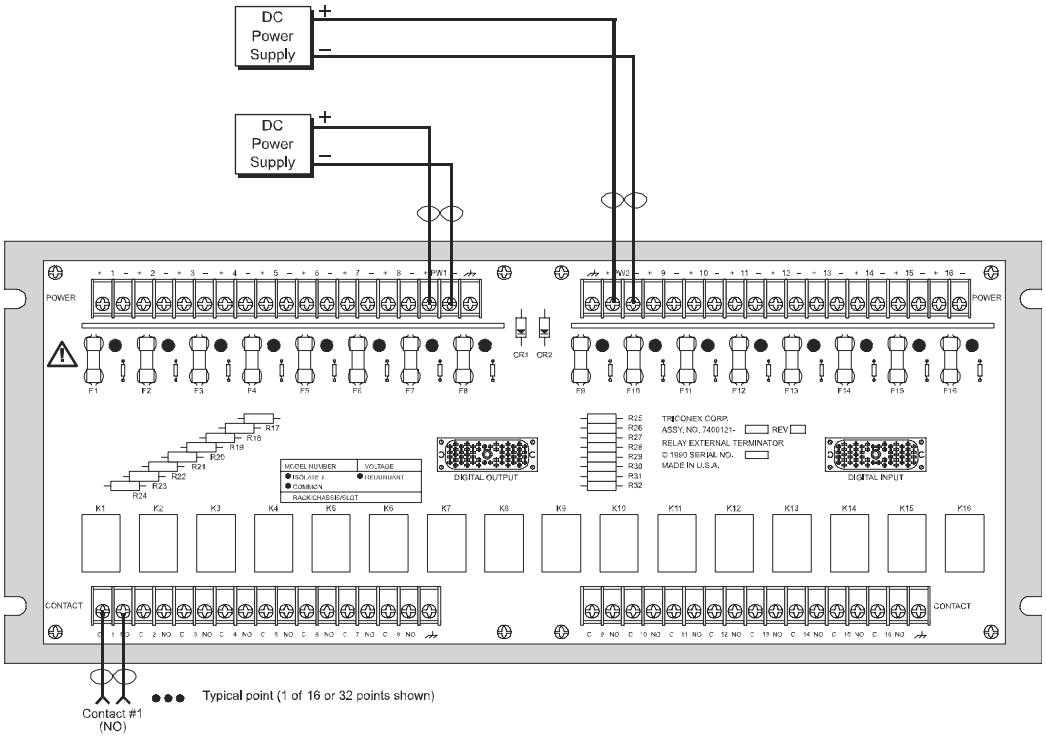

Figure 126 Field Wiring for 9672-810 with a 3607E DO Module

CAUTION Do not exceed 10 inch-pounds (1.13 Nm) of torque when securing leads to the #6 terminal.

Simplified Schematics

This is a simplified schematic of a typical 16-point DC digital output module with a commoned interposing relay panel (1 of 16 points shown).

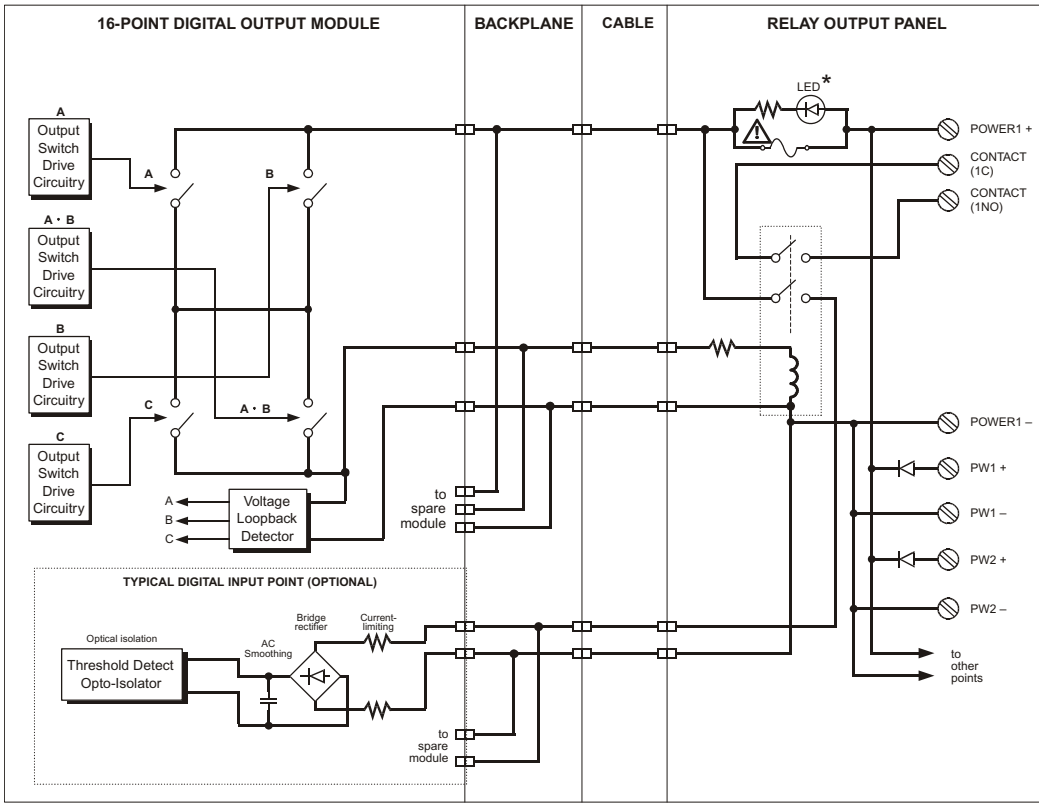

* LEDs are blown-fuse indicators

Figure 127 Simplified Schematic of a 3607E DO Module with a Commoned Interposing Relay Panel

9673-810 (120 VDC, commoned interposing relay, 16 pts.)

Termination panel 9673–810 is compatible with 120 VDC digital output modules and has:

- 16 relay points (C and NO)
- 2 terminals (PW1 + and –) for primary power and return
- 2 terminals (PW2 + and –) for redundant power and return
- An individual fuse with blown-fuse indicator for relay coil and loopback circuit

Each terminal accepts either #6 ring-lug terminals or 24-to-12-gauge (0.3mm^2 to 2.1mm^2) wires.

CAUTION

Relay contacts are not protected by a fuse to allow maximum flexibility for the application. You must provide the necessary contact protection for your application.

Specifications

This table describes specifications for 9673–810.

Table 101 Specifications for Term Panel 9673-810

Feature	Description
Panel type	Commoned interposing relay
Points	16
Relay type	Compact, general-purpose power relays with hold-down clamps
Relay contact rating	10A @ 30 VDC or 277 VAC
Relay switching power (see CAUTION below)	AC: 2500 VA DC: 90 W
Relay maximum output cycle rate	Once per scan
Relay expected life at maximum rated load	100,000 operations
Relay isolation	1000 VAC minimum 1500 VDC minimum
Power consumption per relay	Less than 2 watts

CAUTION

When switching reactive loads, you should de-rate the switching power of the outputs to 25% of maximum (625 VA for AC applications or 22.5 watts for DC applications). When switching incandescent lamps, the inrush current can be 10 to 15 times the rated nominal load current of the lamp. Use the inrush current to calculate the required output switching power. Contact the lamp manufacturer for detailed specifications regarding inrush amplitude and duration.

Compatible Modules

This table describes digital output modules compatible with 9673–810.

Table 102 Modules Compatible with 9673-810

Module Part Number	Points per Module	Module Description	Fuse
3603E	16	120 VDC, commoned, opto-isolated, TMR	1A, fast
3603T	16	120 VDC, commoned, opto-isolated, TMR	1A, fast

Field Wiring Diagrams

This figure illustrates how to connect a 16-point digital output module and a 9673–810 to the field (1 of 16 points shown).

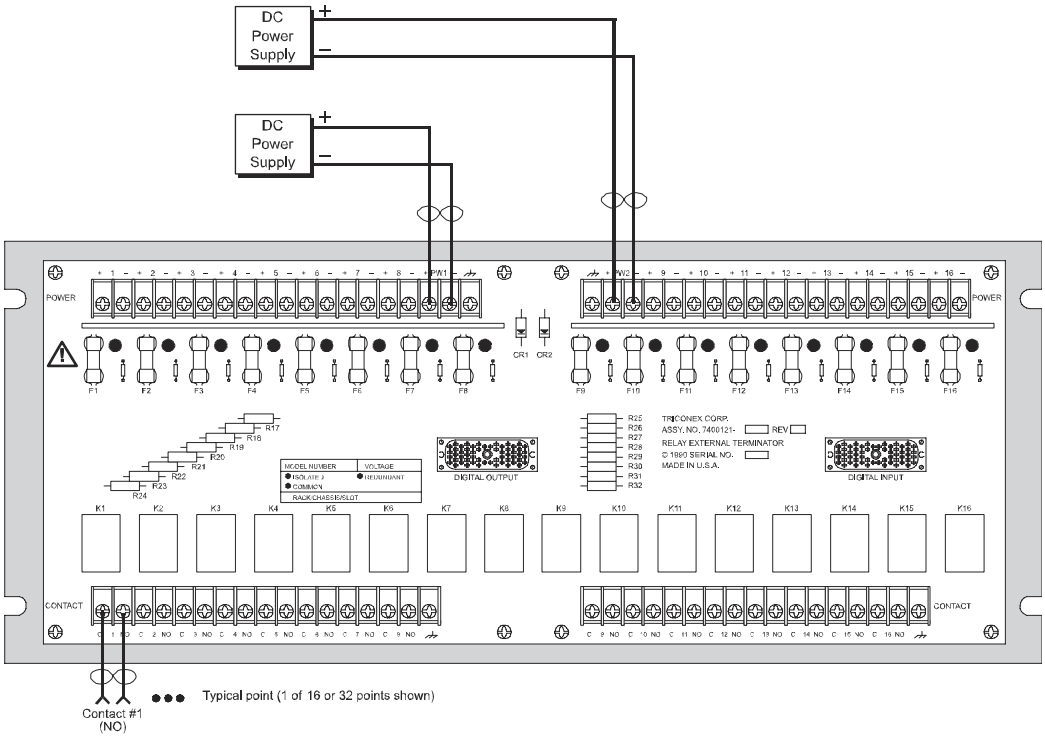

Figure 128 Field Wiring for 9673-810 with a 3603E or 3603T DO Module

CAUTION Do not exceed 10 inch-pounds (1.13 Nm) of torque when securing leads to the #6 terminal.

Simplified Schematics

This is a simplified schematic of a typical 16-point DC digital output module with a commoned interposing relay panel (1 of 16 points shown).

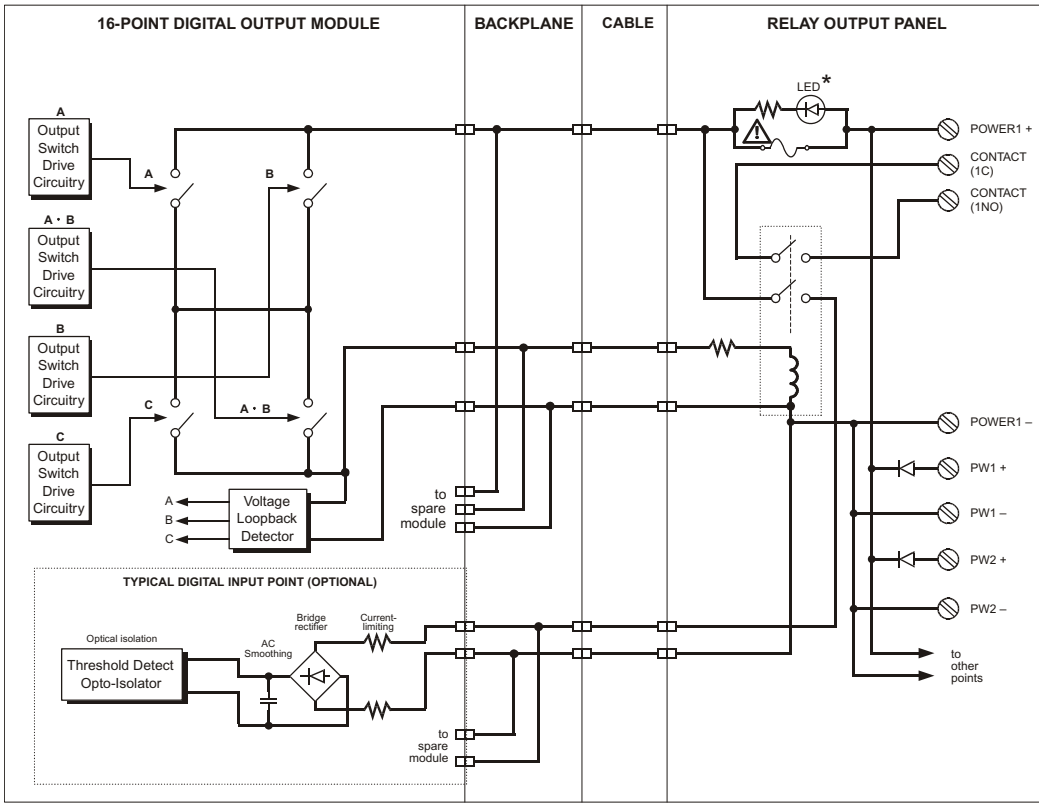

* LEDs are blown-fuse indicators

Figure 129 Simplified Schematic of a 3603E or 3603T DO Module with a Commoned Interposing Relay Panel

Non-Commoned Interposing Relay Term Panels

This section describes non-commoned interposing relay termination panels. Model numbers of these panels are:

- 9670-110 (115 VAC, non-commoned interposing relay, 16 pts.)

This figure represents a typical 16-point non-commoned interposing relay termination panel.

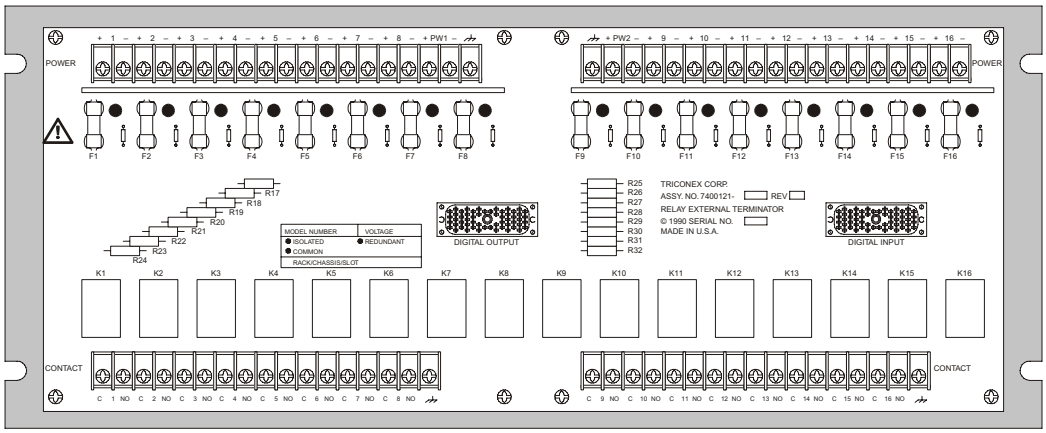

Figure 130 Typical 16-Point Non-Commoned Interposing Relay Panel

For more description of interposing relay term panels, see Termination Panels with Interposing Relays on page 5.

9670-110 (115 VAC, non-commoned interposing relay, 16 pts.)

Termination panel 9670–110 is compatible with 115 VAC digital output modules and has:

- 16 common (C) terminals for connecting to a relay contact
- 16 normally-open (NO) terminals for connecting to a relay contact
- 16 + terminals for connecting +DC or AC hot
- 16 – terminals for connecting DC return or AC neutral
- An individual fuse with blown-fuse indicator for relay coil and loopback circuit

Each terminal accepts either #6 ring-lug terminals or 24-to-12-gauge (0.3mm^2 to 2.1mm^2) wires.

CAUTION

Relay contacts are not protected by a fuse to allow maximum flexibility for the application. You must provide the necessary contact protection for your application.

Specifications

This table describes specifications for 9670–110.

Table 103 Specifications for Term Panel 9670-110

Feature	Description
Panel type	Non-commoned interposing relay
Points	16
Relay type	Compact, general-purpose power relays with hold-down clamps
Relay contact rating	10A @ 30 VDC or 277 VAC
Relay switching power (see CAUTION below)	AC: 2500 VA DC: 90 W
Relay maximum output cycle rate	Once per scan
Relay expected life at maximum rated load	100,000 operations
Relay isolation	1000 VAC minimum 1500 VDC minimum
Power consumption per relay	Less than 2 watts

CAUTION

When switching reactive loads, you should de-rate the switching power of the outputs to 25% of maximum (625 VA for AC applications or 22.5 watts for DC applications). When switching incandescent lamps, the inrush current can be 10 to 15 times the rated nominal load current of the lamp. Use the inrush current to calculate the required output switching power. Contact the lamp manufacturer for detailed specifications regarding inrush amplitude and duration.

Compatible Modules

This table describes digital output modules compatible with 9670–110.

Table 104 Modules Compatible with 9670-110

Module Part Number	Points per Module	Module Description	Fuse
3601E	16	115 VAC, non-commoned, opto-isolated, TMR	3A, fast

Field Wiring Diagrams

This figure illustrates how to connect a 16-point digital output module and a 9670–110 to the field (1 of 16 points shown).

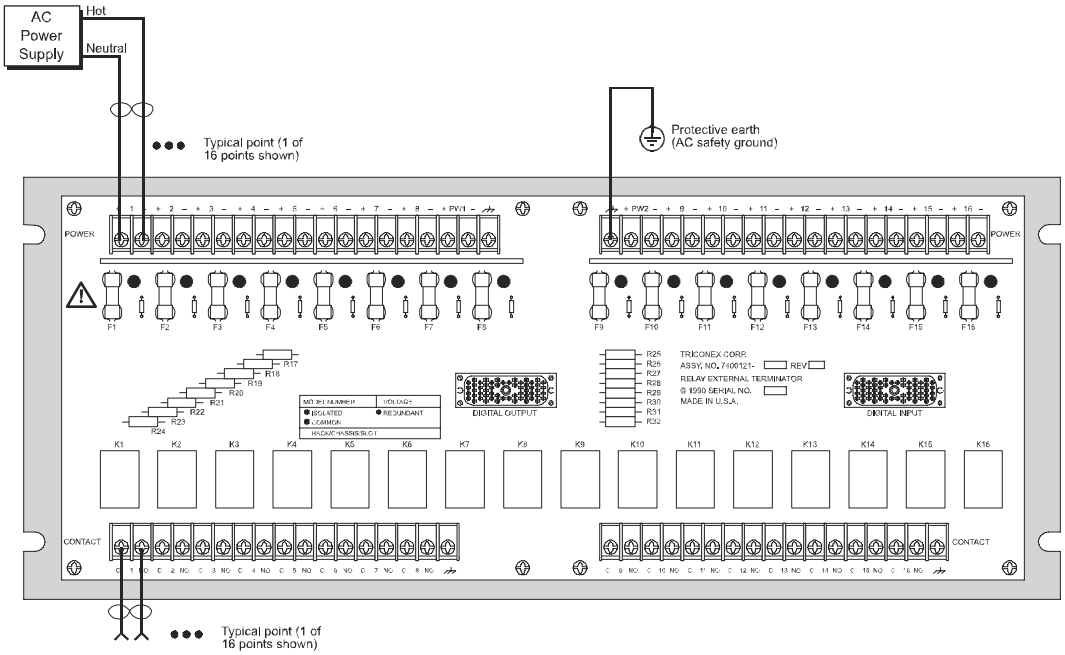

Figure 131 Field Wiring for 9670-110 with a 3601E DO Module

Simplified Schematics

This is a simplified schematic of a typical 16-point AC digital output module with a non-commoned interposing relay panel (1 of 16 points shown).

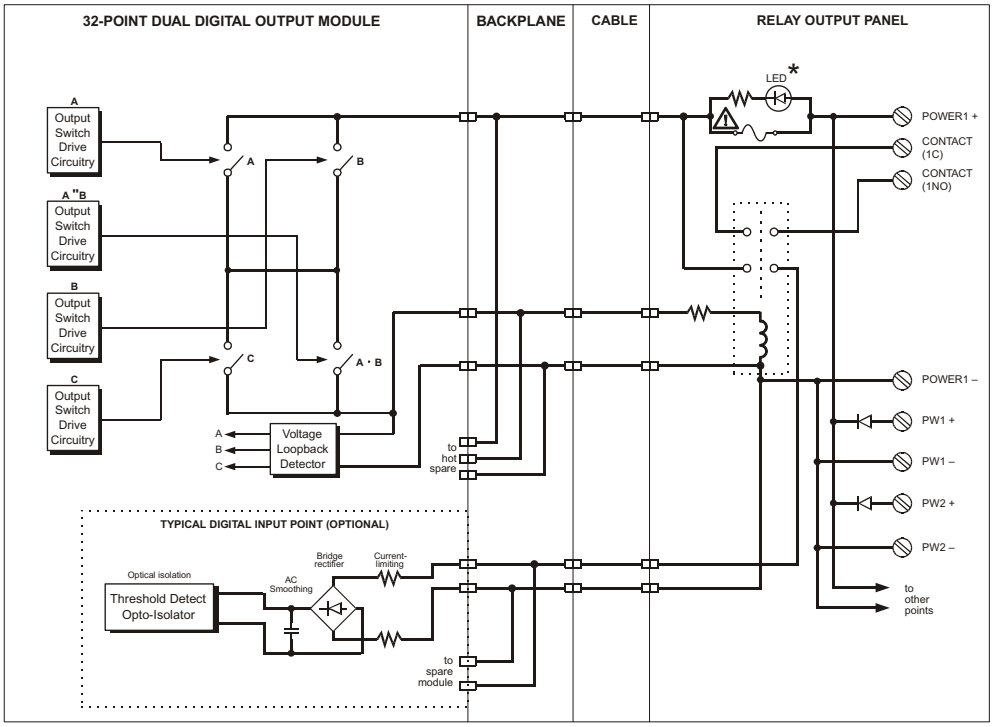

* LEDs are blown-fuse indicators

Figure 132 Simplified Schematic of a 3601E DO Module with a Non-Commoned Interposing Relay Panel

5

Analog Input and Analog Output Termination Panels

Overview 170

16-Point Current Input Term Panels 171

32-Point Current Input Term Panels 188

Thermocouple Input Term Panels 199

Voltage Input Term Panels 208

RTD/TC/AI Input Term Panels 218

Analog Output Term Panels 229

Overview

This chapter describes external field termination panels you can use with analog input modules and analog output modules.

Analog input termination panels are available in these configurations:

- Current input
  - 16-point
  - 16-point, user-configurable
  - 32-point
  - 32-point, 3-wire
  - 32-point, basic
- Thermocouple input
  - 16-point
  - 32-point
- Voltage input
  - 16-point
  - 16-point, basic
  - 32-point, basic
- Panels for use with signal conditioners, which interface with resistive thermal devices, thermocouples, and 4-20 mA transmitters (RTD/TC/AI)

Analog output termination panels are available in 8-point current output and 4-point bipolar output configurations.

16-Point Current Input Term Panels

This section describes 16-point current input term panels. Model numbers of these term panels are:

- 9761-210 (current input, 0–5 VDC, 16 pts.)
- 9761-410 (current input, 0–10 VDC, 16 pts.)
- 9762-210 (current input, 0–5 VDC, 16 pts.)
- 9762-410 (current input, 0–10 VDC, 16 pts.)
- 9771-210 (current input, 0–5 VDC, user configurable, 16 pts.)

This figure represents a typical 16-point current input termination panel.

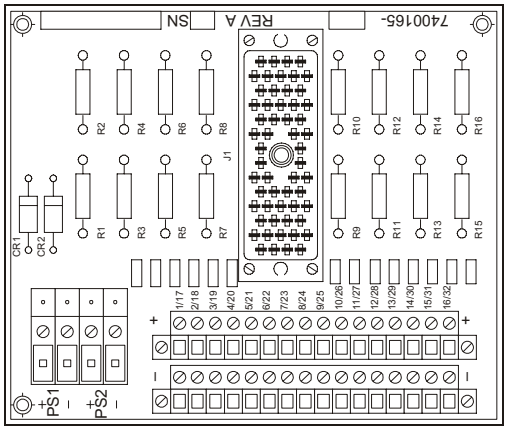

Figure 133 Typical 16-Point Current Input Term Panel

This figure represents a typical 16-point, current input, user-configurable, termination panel.

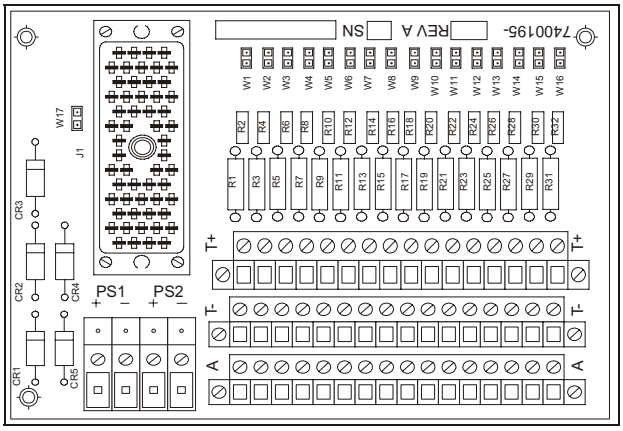

Figure 134 Typical 16-Point Current Input User-Configurable Term Panel

9761-210 (current input, 0-5 VDC, 16 pts.)

Termination panel 9761–210 is compatible with 0 to 5 VDC analog input modules, -5 to +5 VDC analog input modules, and HART analog input interface modules. It has 16 power output terminals (+) and 16 current input terminals (–).

Each positive terminal is current-limited with a 180 ohm series resistor. Each input has a precision 250 ohm resistor for 0–5 VDC current-to-voltage conversion.

The panel supports redundant 24 VDC power sources with diode ORing.

The modules compatible with 9761-210 have 32 points, which means you must use two term panels for each analog input module. Each term panel comes with two sets of labels: 1-16 and 17-32. For information on how to apply the labels, see Appendix F, Panel Labels.

Specifications

This table describes specifications for 9761–210.

Table 105 Specifications for Term Panel 9761-210

Feature	Description
Panel type	Current input
Points	16

Compatible Modules

This table describes analog input modules compatible with 9761–210.

Table 106 Modules Compatible with 9761-210

Module Part Number	Points per Module	Module Description
2770H	32	HART analog input interface module
3700	32	0–5 VDC, non-commoned, differential, DC-coupled, TMR
3700A	32	0–5 VDC, non-commoned, differential, DC-coupled, TMR, +6% input over-range measurement
3721	32	0 to 5 VDC or –5 to +5 VDC (Use TriStation to configure input range), differential, DC-coupled, TMR

Field Wiring Diagrams

This figure illustrates how to connect a 32-point analog input module or a HART analog input interface module and a 9761–210 to the field (1 of 32 module points shown). See Appendix E, Shield Ground for shield ground installation guidelines.

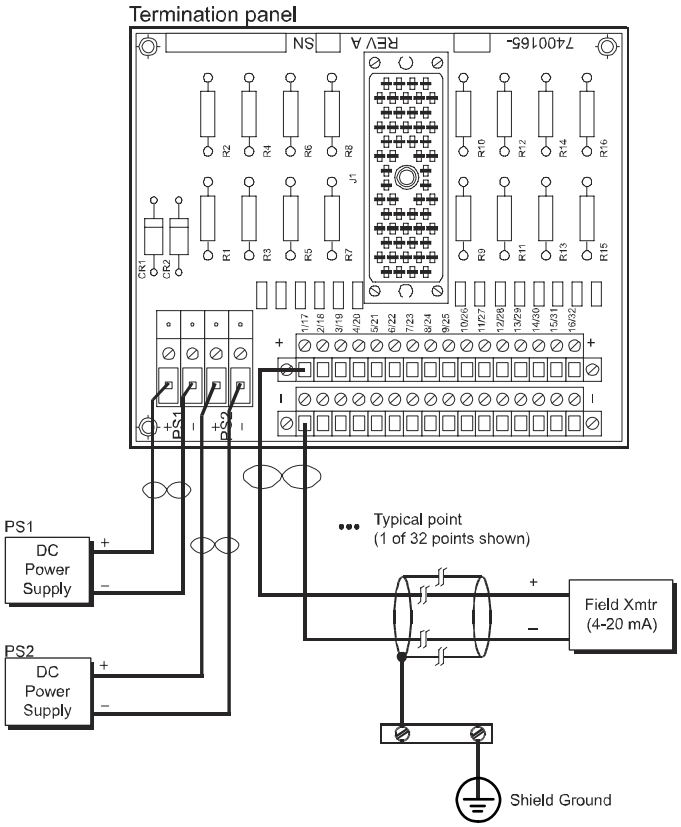

Figure 135 Field Wiring for 9761-210 with a 3700, 3700A, or 3721 AI Module or a 2770H HART AI Interface Module

Note For additional instructions on installing HART Interface Modules, see the *Planning and Installation Guide for Tricon v9–v10 Systems*.

Simplified Schematics

This is a simplified schematic of a typical 32-point non-commoned analog input module with a current input panel (1 of 32 module points shown).

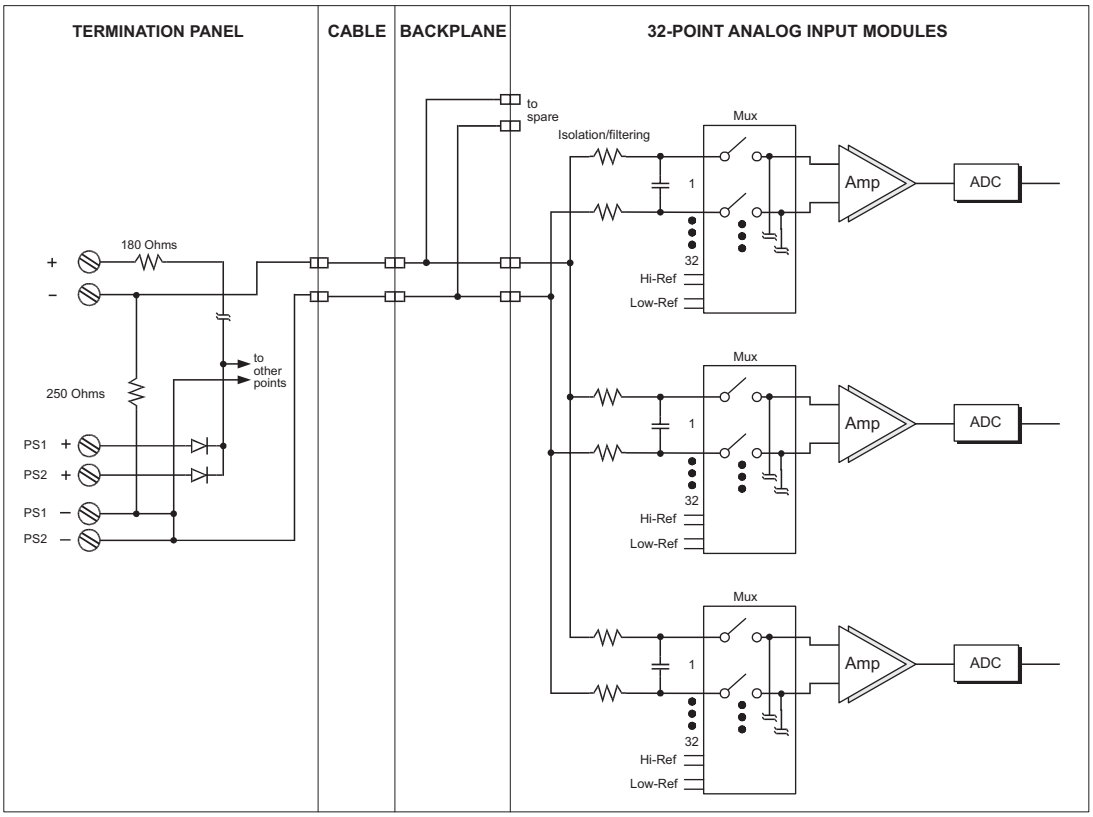

Figure 136 Simplified Schematic of a 3700, 3700A, or 3721 AI Module with a 9761-210 Panel

This is a simplified schematic of a Model 2770H HART Analog Input Interface Module with a current input panel (1 of 32 module points shown).

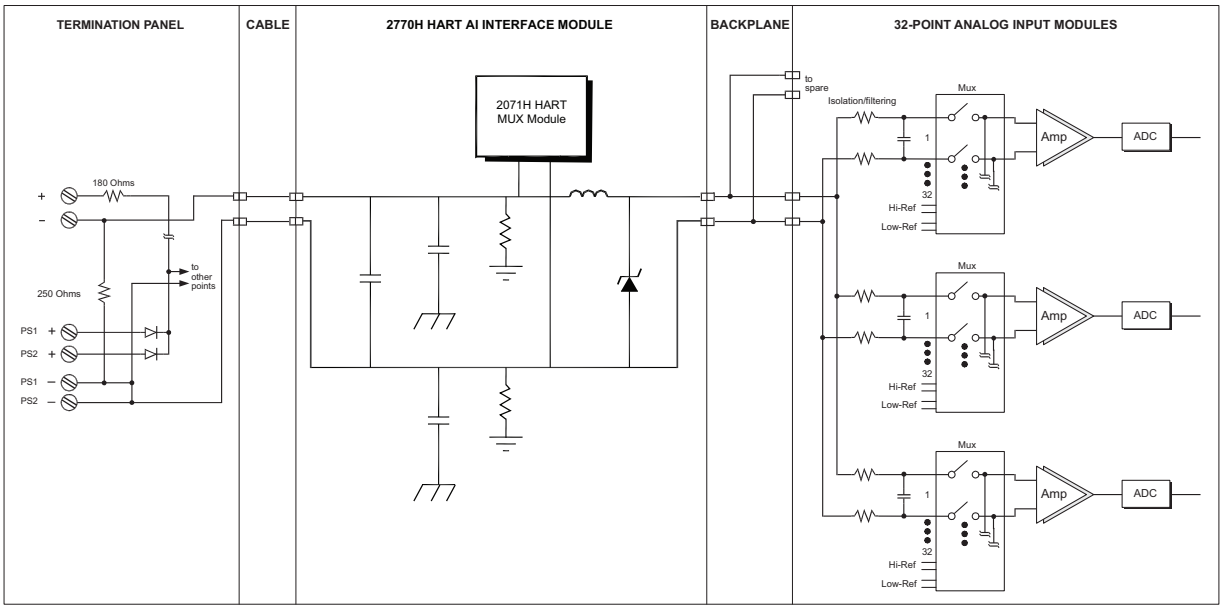

Figure 137 Simplified Schematic of a 2770H HART AI Interface Module with a 3700A or 3721 AI Module and a 9761-210 Panel

9761-410 (current input, 0–10 VDC, 16 pts.)

Termination panel 9761–410 is compatible with 0–10 VDC analog input modules and has 16 power output terminals (+) and 16 current input terminals (–).

Each positive terminal is current-limited with a 180 ohm series resistor. Each input has a precision 500 ohm resistor for 0–10 VDC current-to-voltage conversion.

The panel supports redundant 24 VDC power sources with diode ORing.

The modules compatible with 9761-410 have 32 points, which means you must use two term panels for each analog input module. Each term panel comes with two sets of labels: 1-16 and 17-32. For information on how to apply the labels, see Appendix F, Panel Labels.

Specifications

This table describes specifications for 9761–410.

Table 107 Specifications for Term Panel 9761-410

Feature	Description
Panel type	Current input
Points	16

Compatible Modules

This table describes analog input modules compatible with 9761–410.

Table 108 Modules Compatible with 9761-410

Module Part Number	Points per Module	Module Description
3701	32	0–10 VDC, non-commoned, differential, DC-coupled, TMR
3721	32	0 to 5 VDC or –5 to +5 VDC (Use TriStation to configure input range), differential, DC-coupled, TMR

Field Wiring Diagrams

This figure illustrates how to connect a 32-point analog input module and a 9761–410 to the field (1 of 32 module points shown). See Appendix E, Shield Ground for shield ground installation guidelines.

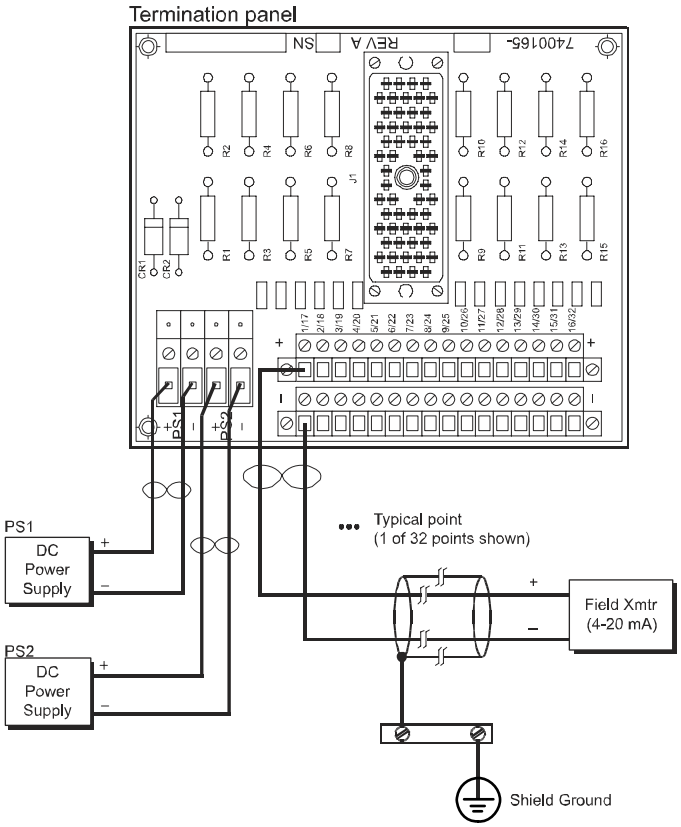

Figure 138 Field Wiring for 9761-410 with a 3701 or 3721 AI Module

Simplified Schematics

This is a simplified schematic of a typical 32-point non-commoned analog input module with a current input panel (1 of 32 module points shown).

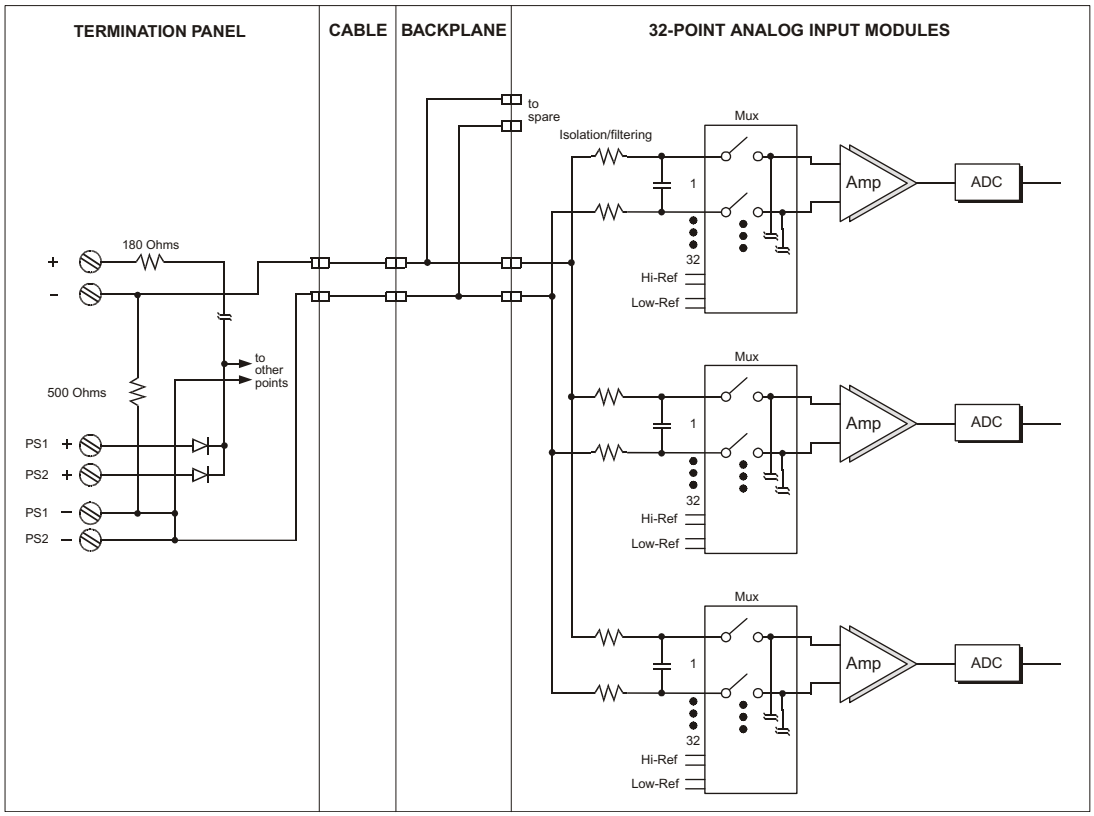

Figure 139 Simplified Schematic of a 3701 or 3721 AI Module with a 9761-410 Panel

9762-210 (current input, 0-5 VDC, 16 pts.)

Termination panel 9762–210 is compatible with 0–5 VDC analog input modules and has 16 power output terminals (+) and 16 current input terminals (–).

Each positive terminal is current-limited with a 180 Ohm series resistor. Each input has a precision 250 Ohm resistor for 0–5 VDC current-to-voltage conversion.

The panel supports redundant 24 VDC power sources with diode ORing.

Specifications

This table describes specifications for 9762–210.

Table 109 Specifications for Term Panel 9762-210

Feature	Description
Panel type	Current input
Points	16

Compatible Modules

This table describes analog input modules compatible with 9762–210.

Table 110 Modules Compatible with 9762-210

Module Part Number	Points per Module	Module Description
3703E	16	0–5 VDC or 0–10 VDC (Use TriStation to configure for 0–5 VDC), non-commoned, differential, isolated, TMR

Field Wiring Diagrams

This figure illustrates how to connect a 16-point analog input module and a 9762–210 to the field (1 of 16 module points shown). See Appendix E, Shield Ground for shield ground installation guidelines.

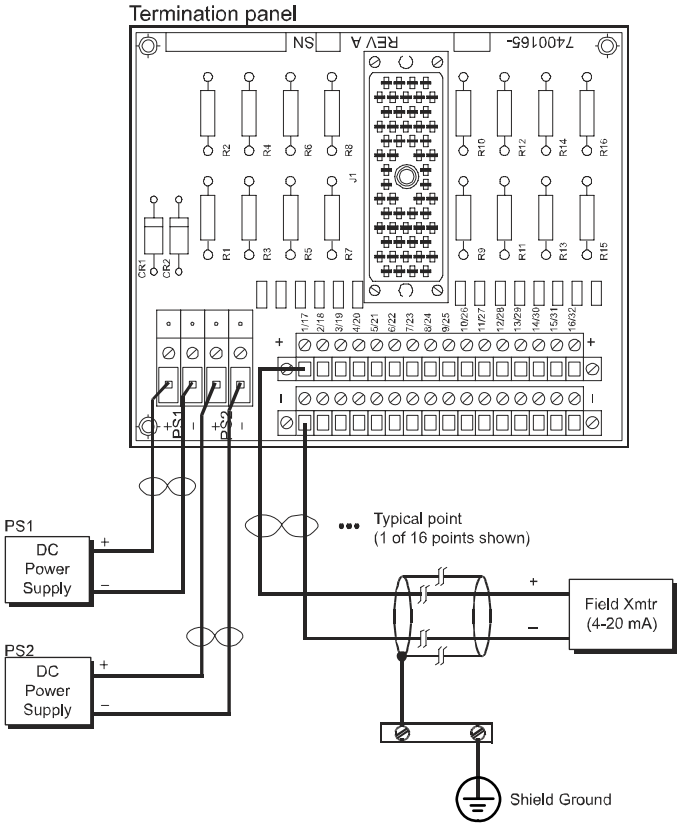

Figure 140 Field Wiring for 9762-210 with a 3703E AI Module

Simplified Schematics

This is a simplified schematic of a typical 16 -point non-commoned analog input module with a current input panel (1 of 16 module points shown).

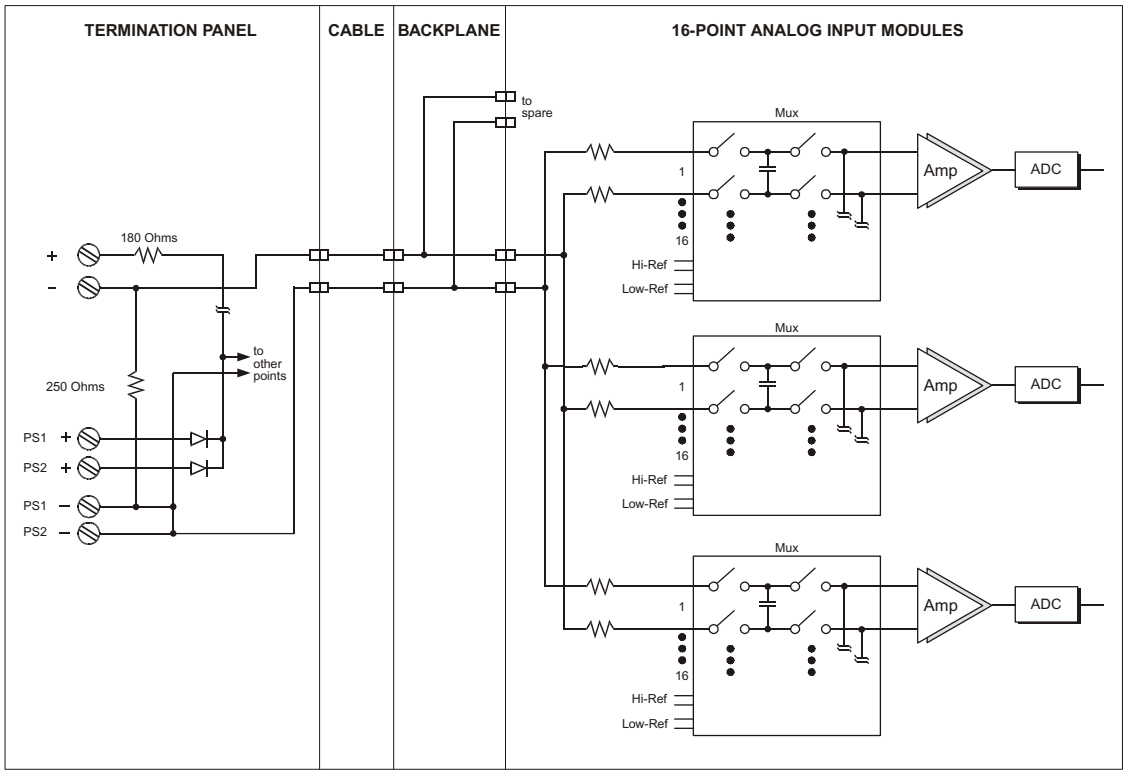

Figure 141 Simplified Schematic of a 3703E AI Module with a 9762-210 Panel

9762-410 (current input, 0-10 VDC, 16 pts.)

Termination panel 9762–410 is compatible with 0–10 VDC analog input modules and has 16 power output terminals (+) and 16 current input terminals (–).

Each positive terminal is current-limited with a 180 Ohm series resistor. Each input has a precision 500 Ohm resistor for 0–10 VDC current-to-voltage conversion.

The panel supports redundant 24 VDC power sources with diode ORing.

Specifications

This table describes specifications for 9762–410.

Table 111 Specifications for Term Panel 9762-410

Feature	Description
Panel type	Current input
Points	16

Compatible Modules

This table describes analog input modules compatible with 9762–410.

Table 112 Modules Compatible with 9762-410

Module Part Number	Points per Module	Module Description
3703E	16	0–5 VDC or 0–10 VDC (Use TriStation to configure for 0–10 VDC), non-commoned, differential, isolated, TMR

Field Wiring Diagrams

This figure illustrates how to connect a 16-point analog input module and a 9762–410 to the field (1 of 16 module points shown). See Appendix E, Shield Ground for shield ground installation guidelines.

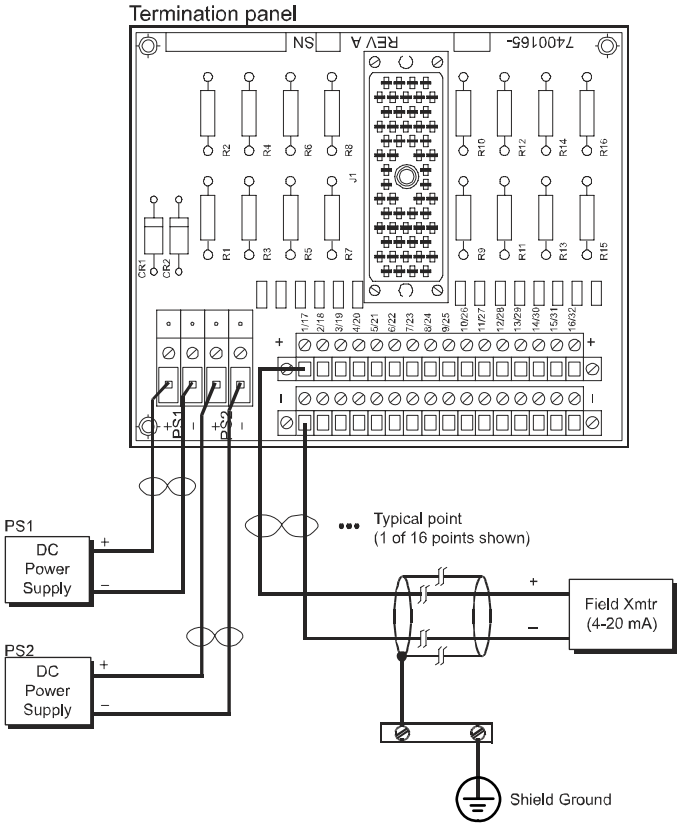

Figure 142 Field Wiring for 9762-410 with a 3703E AI Module

Simplified Schematics

This is a simplified schematic of a typical 16-point non-commoned analog input module with a current input panel (1 of 16 module points shown).

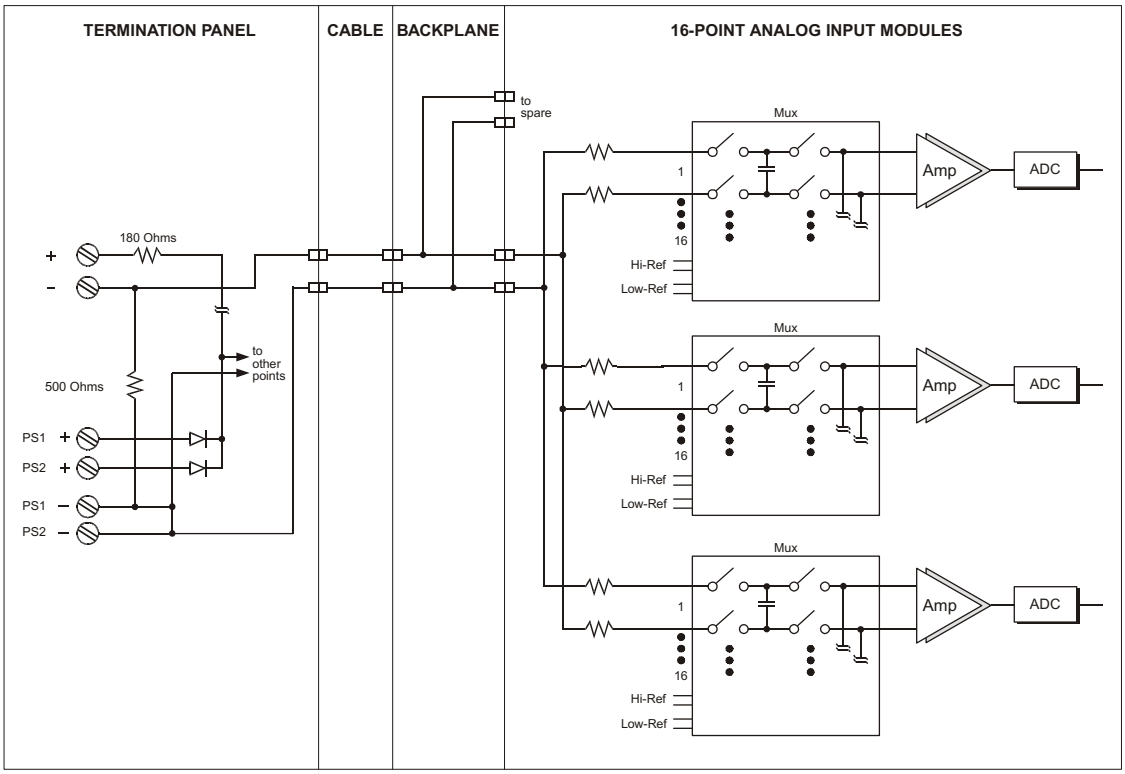

Figure 143 Simplified Schematic of a 3703E AI Module with a 9762-410 Panel

9771-210 (current input, 0-5 VDC, user configurable, 16 pts.)

Termination panel 9771–210 is compatible with 0 to 5 VDC, 0 to 10 VDC, and -5 to +5 VDC analog input modules. It has 16 power output terminals (+) and 16 current input terminals (–).

Each positive terminal is current-limited with a 180 Ohm series resistor. Each input has a precision 250 Ohm resistor for 0–5 VDC current-to-voltage conversion.

The panel supports redundant 24 VDC power sources with diode ORing.

When using 32-point modules, you must use two term panels for each analog input module. Each term panel comes with two sets of labels: 1-16 and 17-32. For information on how to apply the labels, see Appendix F, Panel Labels.

Specifications

This table describes specifications for 9771–210.

Table 113 Specifications for Term Panel 9771-210

Feature	Description
Panel type	Current input, user-configurable
Points	16

Compatible Modules

This table describes analog input modules compatible with 9771–210.

Table 114 Modules Compatible with 9771-210

Module Part Number	Points per Module	Module Description
3700	32	0–5 VDC, non-commoned, differential, DC-coupled, TMR
3700A	32	0–5 VDC, non-commoned, differential, DC-coupled, TMR, +6% input over-range measurement
3703E	16	0–5 VDC or 0–10 VDC (Use TriStation to configure for 0–5 VDC), non-commoned, differential, isolated, TMR
3721	32	0 to 5 VDC or –5 to +5 VDC (Use TriStation to configure input range), differential, DC-coupled, TMR

Field Wiring Diagrams

This figure illustrates how to connect a 16-point or 32-point analog input module and a 9771-210 to the field (1 of 16 or 32 module points shown). See Appendix E, Shield Ground for shield ground installation guidelines.

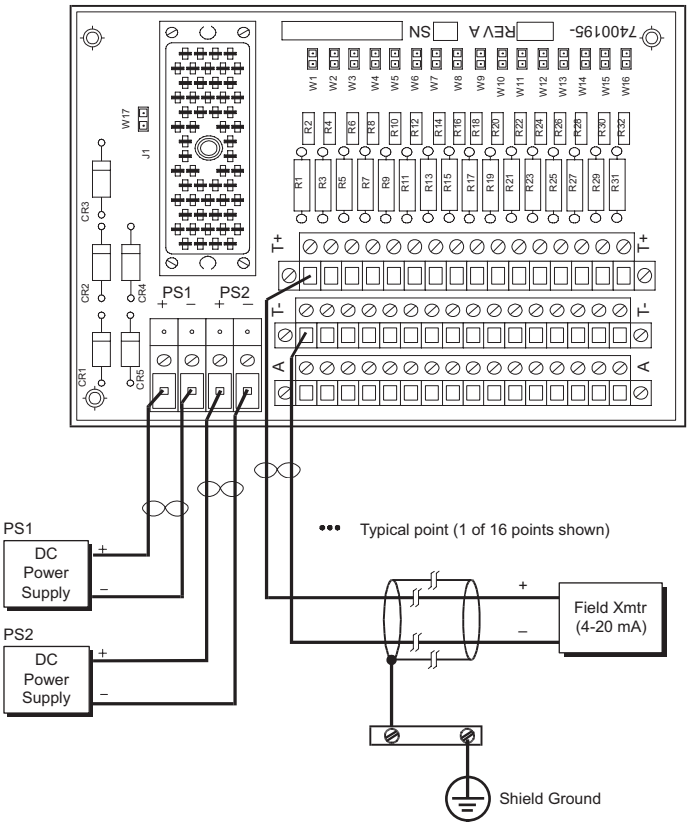

Figure 144 Field Wiring for 9771-210 with a 3700, 3700A, 3703E, or 3721 AI Module

This figure illustrates how to connect a 16-point or 32-point analog input module and a 9771-210 to the field and another system, such as a DCS (1 of 16 or 32 module points shown). See Appendix E, Shield Ground for shield ground installation guidelines.

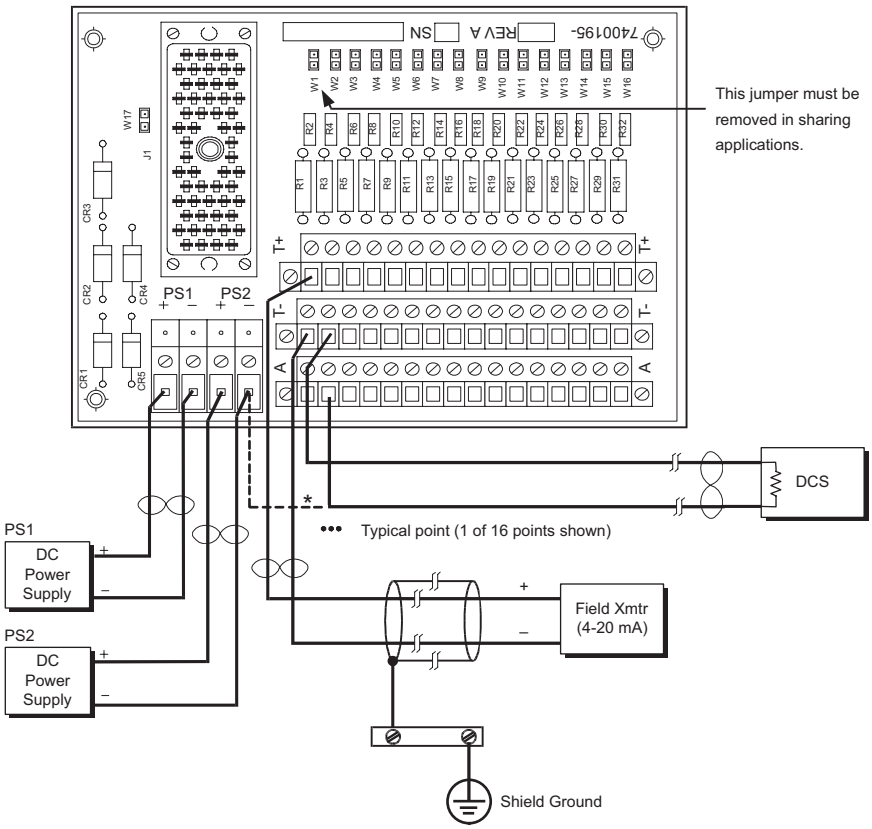

* Return may be connected to an unused A terminal with the W jumper in place or to a – PS terminal.

Figure 145 Field Wiring for 9771-210 with a 3700, 3700A, 3703E, or 3721 AI Module—Sharing with Another System

WARNING

Sharing a transmitter between the Tricon and another system may violate restrictions regarding the segregation of safety and control functions. The sharing capability of this termination panel should only be used in those applications where these restrictions do not exist, or can be otherwise mitigated.

Simplified Schematics

This is a simplified schematic of a typical 32-point analog input module with a current input panel (1 of 32 module points shown).

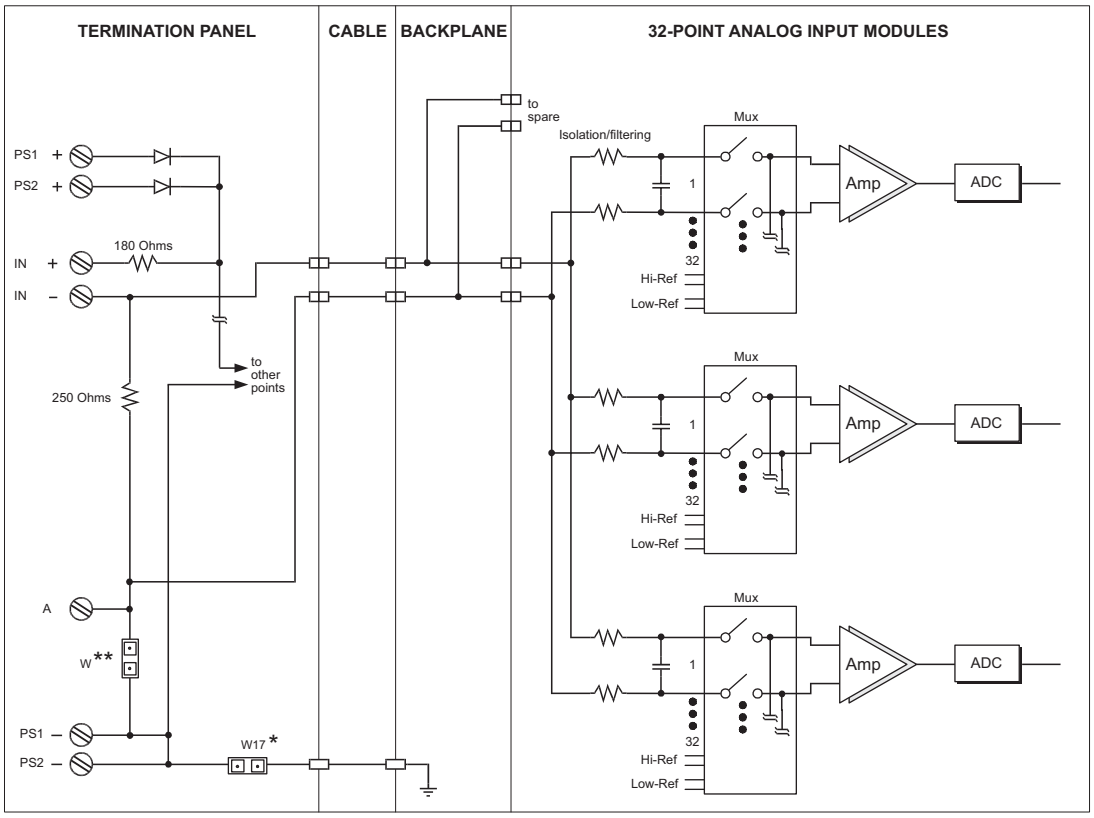

* When the 9771-210 panel is used with a 3700A or a 3721 module, do not remove the W17 jumper.
** To aid sharing the field transmitter with another system (for example, a DCS), the W jumper may be removed.

Figure 146 Simplified Schematic of a 3700, 3700A, or 3721 AI Module with a 9771-210 Panel

This is a simplified schematic of a typical 16-point analog input module with a current input panel (1 of 16 module points shown).

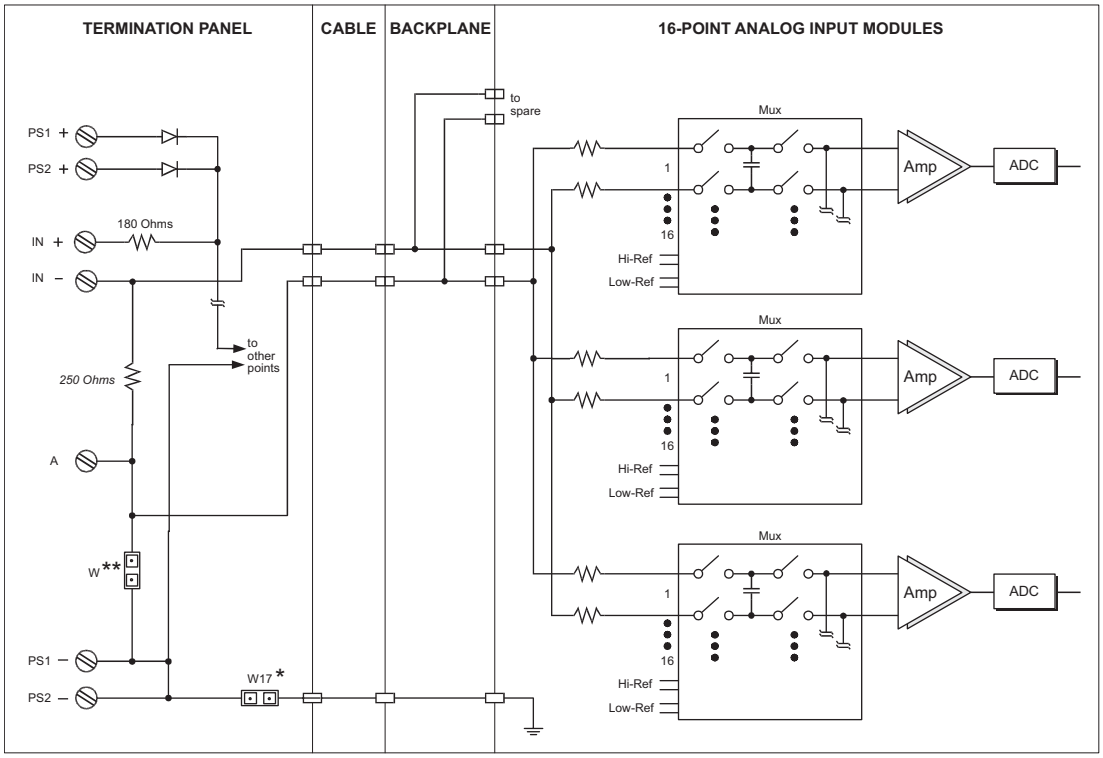

* For extended common-mode operation, you must remove the W17 jumper.

** To aid sharing the field transmitter with another system (for example, a DCS), the W jumper may be removed.

Figure 147 Simplified Schematic of a 3703E AI Module with a 9771-210 Panel

32-Point Current Input Term Panels

This section describes 32-point current input term panels. Model numbers of these term panels are:

- 9750-210 (current input, 0–5 VDC, basic, 32 pts.)
- 9760-210 (current input, 0–5 VDC, 32 pts.)
- 9760-410 (current input, 0–10 VDC, 32 pts.)
- 9765-210 (3-wire current input, 0–5 VDC, 32 pts.)

This figure represents a typical 32-point current input basic panel.

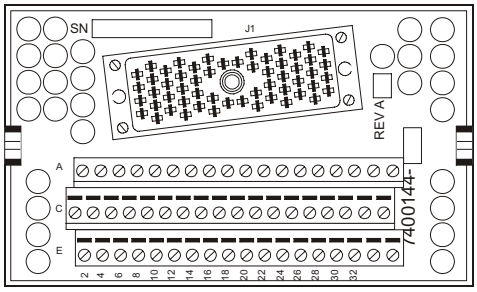

Figure 148 Typical 32-Point Current Input Basic Term Panel

This figure represents a typical 32-point current input termination panel.

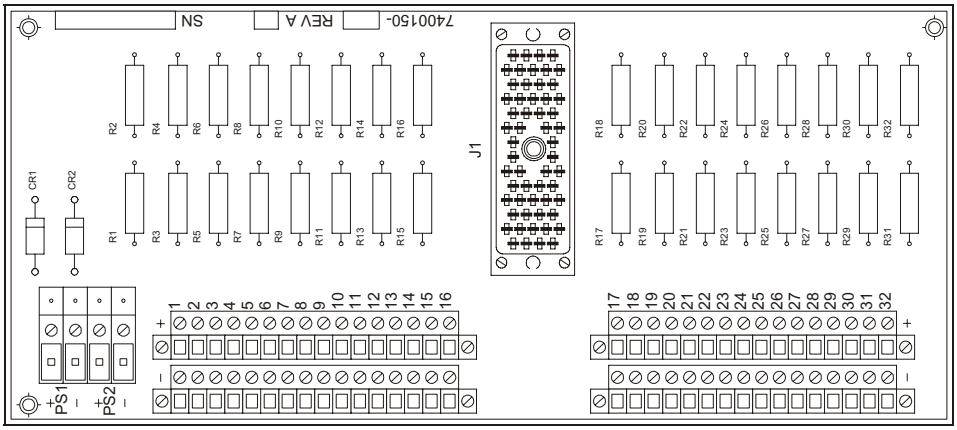

Figure 149 Typical 32-Point Current Input Term Panel

9750-210 (current input, 0-5 VDC, basic, 32 pts.)

Termination panel 9750–210 is compatible with 0–5 VDC analog input modules and has 32 current input terminals (IN+) and commoned return terminals (RTN).

The modules compatible with 9750–210 have 64 points, which means you must use two term panels for each analog input module. Each term panel comes with two sets of labels: 1-32 and 33-64. For information on how to apply the labels, see Appendix F, Panel Labels.

Specifications

This table describes specifications for 9750–210.

Table 115 Specifications for Term Panel 9750-210

Feature	Description
Panel type	Current input, basic
Points	32

Compatible Modules

This table describes analog input modules compatible with 9750–210.

Table 116 Modules Compatible with 9750-210

Module Part Number	Points per Module	Module Description
3704E	64	0–5 VDC or 0–10 VDC (Use TriStation to configure for 0–5 VDC), commoned, high-density, DC-coupled, TMR
3720	64	0–5 VDC, single-ended, high-density, TMR

Field Wiring Diagrams

This figure illustrates how to connect a 64-point analog input module and a 9750–210 to the field (1 of 64 module points shown).

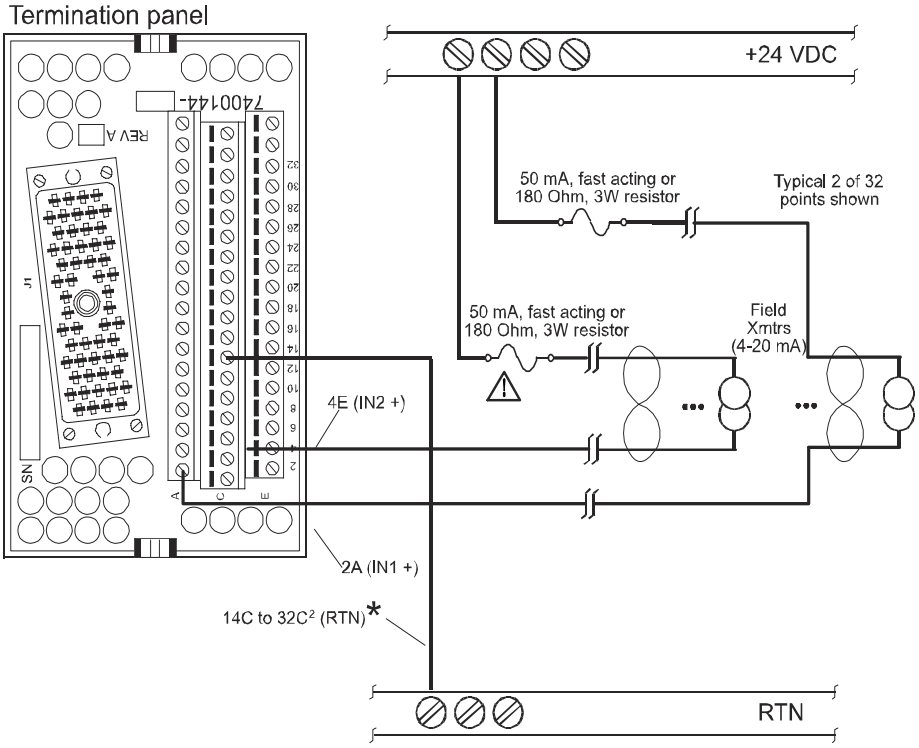

* One RTN connection is required. More than one is okay.

Figure 150 Field Wiring for 9750-210 with a 3704E or 3720 AI Module

Simplified Schematics

This is a simplified schematic of a typical 64-point analog input module with a basic current input panel (1 of 64 module points shown).

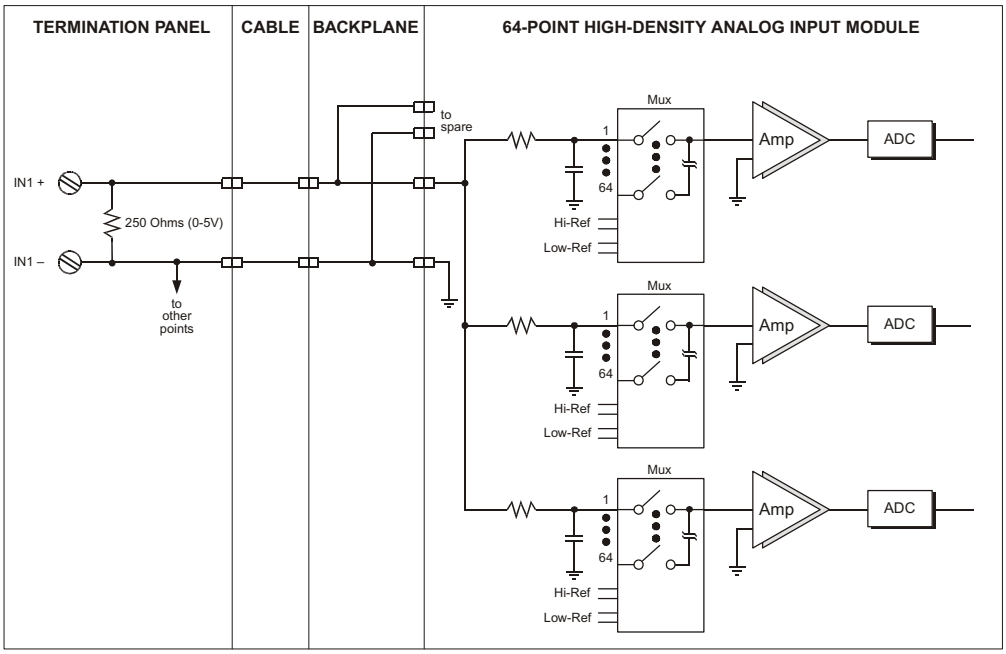

Figure 151 Simplified Schematic of a 3704E or 3720 AI Module with a 9750-210 Panel

9760-210 (current input, 0-5 VDC, 32 pts.)

Termination panel 9760–210 is compatible with 0–5 VDC analog input modules and has 32 power output terminals (+) and 32 current input terminals (–).

Each positive terminal is current-limited with a 180 Ohm series resistor. Each input has a precision 250 Ohm resistor for 0–5 VDC current-to-voltage conversion.

The panel supports redundant 24 VDC power sources with diode ORing.

The modules compatible with 9760–210 have 64 points, which means you must use two term panels for each analog input module. Each term panel comes with two sets of labels: 1-32 and 33-64. For information on how to apply the labels, see Appendix F, Panel Labels.

Specifications

This table describes specifications for 9760–210.

Table 117 Specifications for Term Panel 9760-210

Feature	Description
Panel type	Current input
Points	32

Compatible Modules

This table describes analog input modules compatible with 9760–210.

Table 118 Modules Compatible with 9760-210

Module Part Number	Points per Module	Module Description
3704E	64	0–5 VDC or 0–10 VDC (Use TriStation to configure for 0–5 VDC), commoned, high-density, DC-coupled, TMR
3720	64	0–5 VDC, single-ended, high-density, TMR

Field Wiring Diagrams

This figure illustrates how to connect a 64-point analog input module and a 9760–210 to the field (1 of 64 module points shown). See Appendix E, Shield Ground for shield ground installation guidelines.

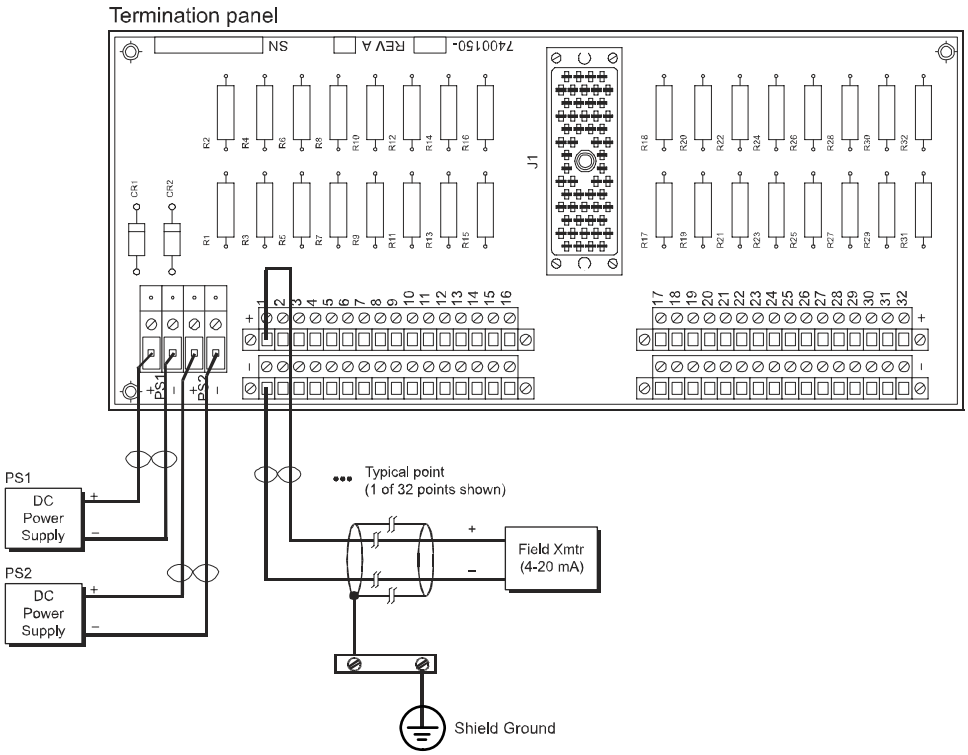

Figure 152 Field Wiring for 9760-210 with a 3704E or 3720 AI Module

Simplified Schematics

This is a simplified schematic of a typical 64-point analog input module with a current input panel (1 of 64 module points shown).

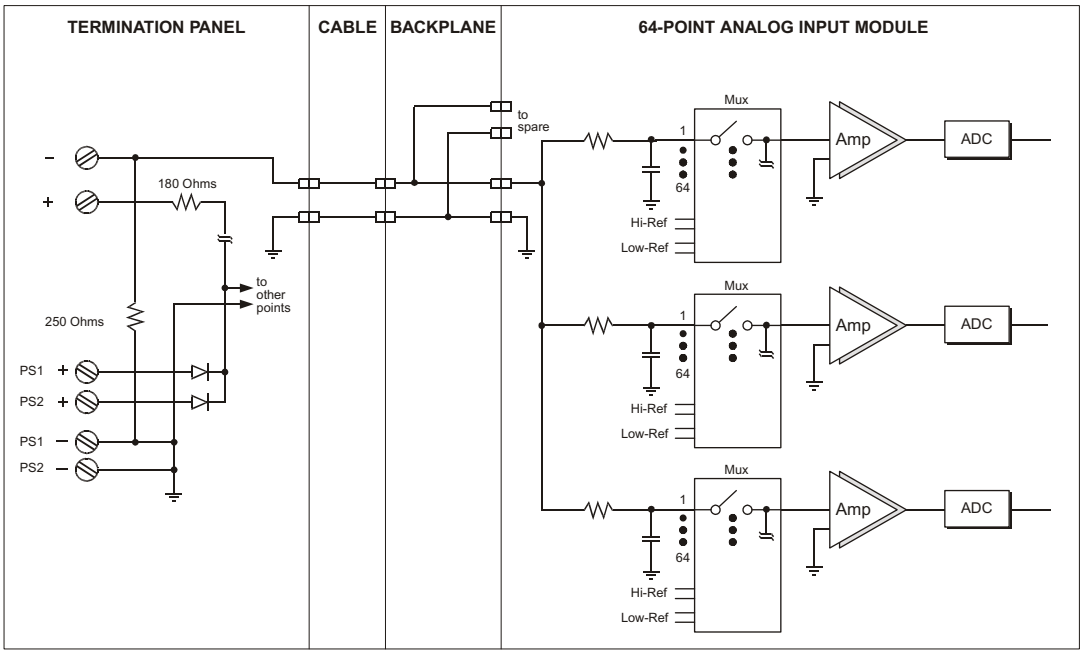

Figure 153 Simplified Schematic of a 3704E or 3720 AI Module with a 9760-210 Panel

9760-410 (current input, 0-10 VDC, 32 pts.)

Termination panel 9760–410 is compatible with 0–10 VDC analog input modules and has 32 power output terminals (+) and 32 current input terminals (–).

Each positive terminal is current-limited with a 180 Ohm series resistor. Each input has a precision 500 ohm resistor for 0–5 VDC current-to-voltage conversion.

The panel supports redundant 24 VDC power sources with diode ORing.

The modules compatible with 9760–410 have 64 points, which means you must use two term panels for each analog input module. Each term panel comes with two sets of labels: 1-32 and 33-64. For information on how to apply the labels, see Appendix F, Panel Labels.

Specifications

This table describes specifications for 9760–410.

Table 119 Specifications for Term Panel 9760-410

Feature	Description
Panel type	Current input
Points	32

Compatible Modules

This table describes analog input modules compatible with 9760–410.

Table 120 Modules Compatible with 9760-410

Module Part Number	Points per Module	Module Description
3704E	64	0–5 VDC or 0–10 VDC (Use TriStation to configure for 0–10 VDC), commoned, high-density, DC-coupled, TMR
3720	64	0–5 VDC, single-ended, high-density, TMR

Field Wiring Diagrams

This figure illustrates how to connect a 64-point analog input module and a 9760–410 to the field (1 of 64 module points shown). See Appendix E, Shield Ground for shield ground installation guidelines.

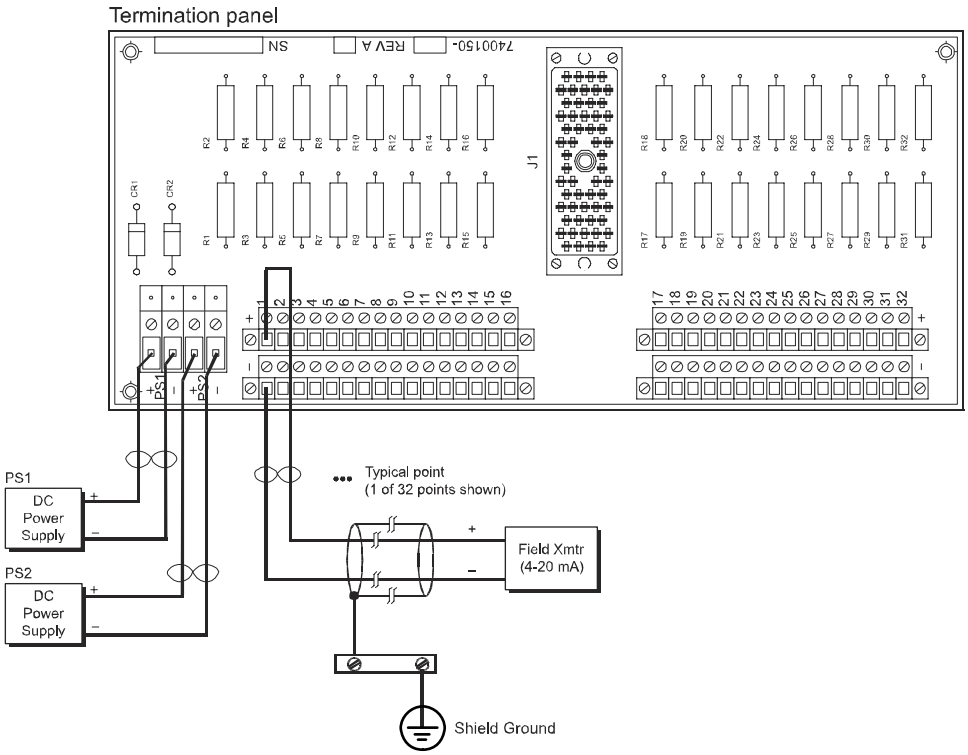

Figure 154 Field Wiring for 9760-410 with a 3704E or 3720 AI Module

Simplified Schematics

This is a simplified schematic of a typical 64-point analog input module with a current input panel (1 of 64 module points shown).

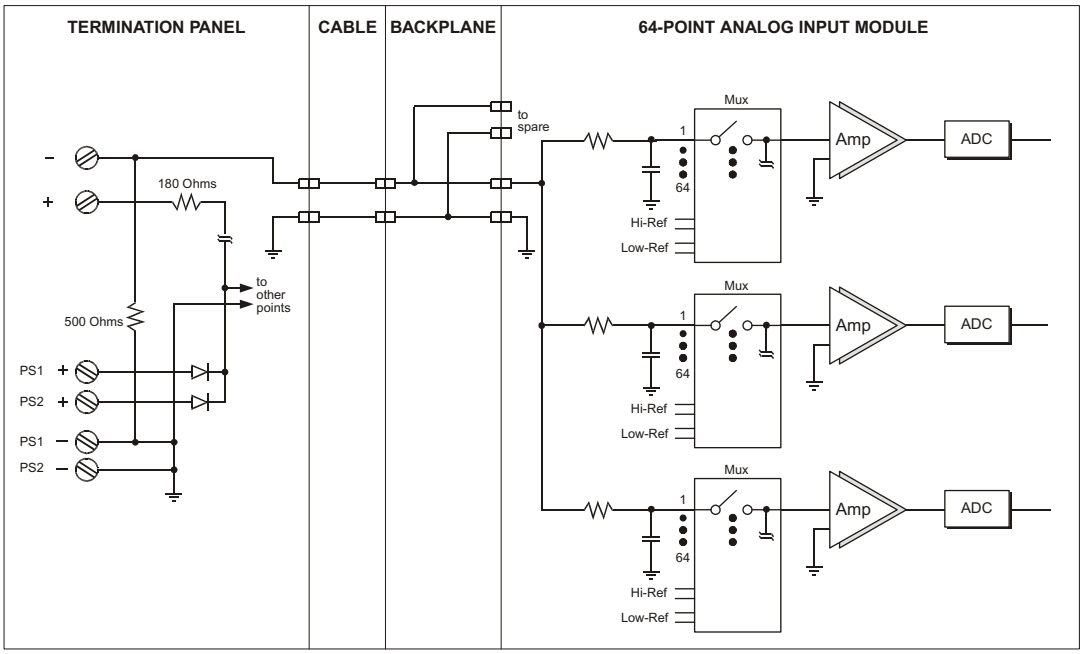

Figure 155 Simplified Schematic of a 3704E or 3720 AI Module with a 9760-410 Panel

9765-210 (3-wire current input, 0-5 VDC, 32 pts.)

Termination panel 9765–210 is a 3-wire current input panel, which is compatible with 0–5 VDC analog input modules. Each panel has:

- 32 output terminals (T+) for the input terminal of a 3-wire 4–20 mA field transmitter. A 500 mA fast-acting fuse protects each terminal.
- 32 input terminals (T–) for the output terminal of a 4–20 mA field transmitter. A 50 mA fast-acting fuse protects the precision current-to-voltage resistor.
- 32 return terminals (RTN) for the return terminal of a 3-wire 4–20 mA field transmitter.

The panel supports redundant 24 VDC power sources with diode ORing.

The modules compatible with 9765–210 have 64 points, which means you must use two term panels for each analog input module. Each term panel comes with two sets of labels: 1-32 and 33-64. For information on how to apply the labels, see Appendix F, Panel Labels.

Specifications

This table describes specifications for 9765–210.

Table 121 Specifications for Term Panel 9765-210

Feature	Description
Panel type	3-wire current input
Points	32
Leakage current per point	Maximum: 3.5 mA Typical: 2.0 mA
Maximum total current	12 amps

Compatible Modules

This table describes analog input modules compatible with 9765–210.

Table 122 Modules Compatible with 9765-210

Module Part Number	Points per Module	Module Description
3704E	64	0–5 VDC or 0–10 VDC (Use TriStation to configure for 0–5 VDC), commoned, high-density, DC-coupled, TMR
3720	64	0–5 VDC, single-ended, high-density, TMR

Field Wiring Diagrams

This figure illustrates how to connect a 64-point, 3-wire analog input module and a 9765–210 to the field (1 of 64 module points shown). See Appendix E, Shield Ground for shield ground installation guidelines.

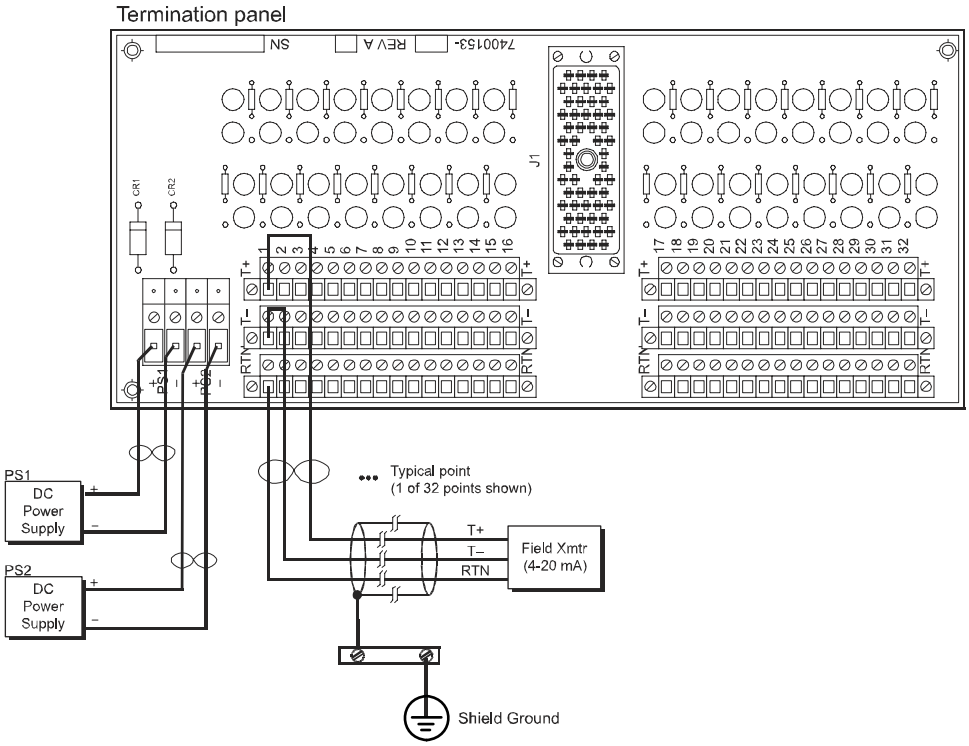

Figure 156 Field Wiring for 9765-210 with a 3704E or 3720 AI Module

Simplified Schematics

This is a simplified schematic of a typical 64-point, 3-wire analog input module with a current input panel (1 of 64 module points shown).

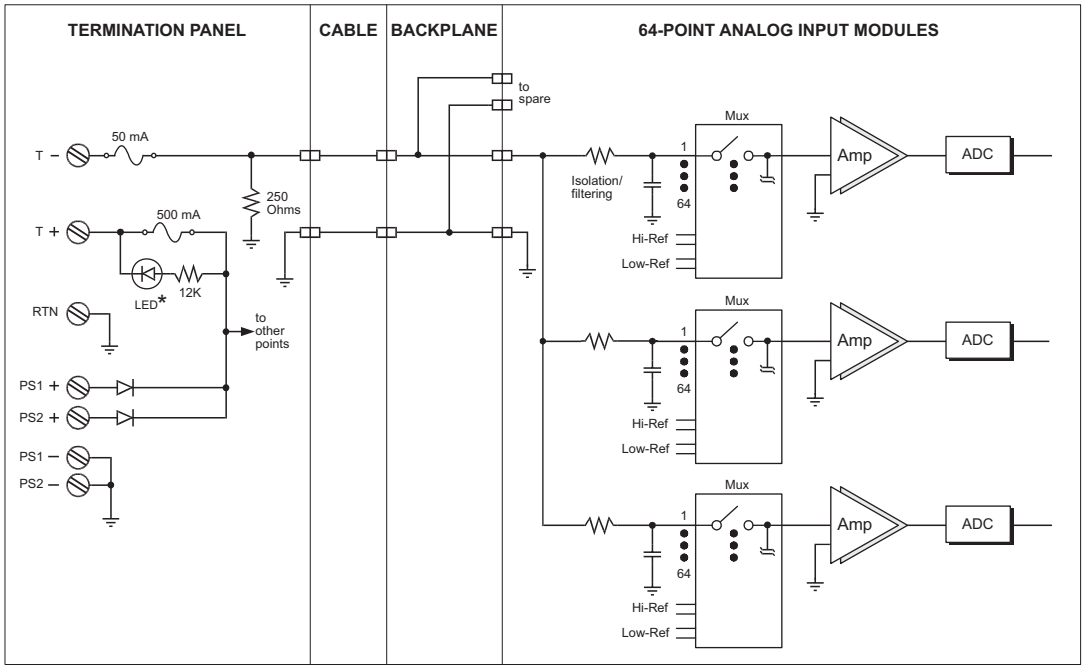

*LEDs are blown-fuse indicators.

Figure 157 Simplified Schematic of a 3704E or 3720 AI Module with a 9765-210 Panel

Thermocouple Input Term Panels

This section describes thermocouple input term panels. Model numbers of these term panels are:

- 9765-610 (TC input, upscale/downscale, 16 pts.)
- 9766-210 (TC input, upscale, 16 pts.)
- 9766-510 (TC input, downscale, 16 pts.)

This figure represents a typical 16-point thermocouple input termination panel.

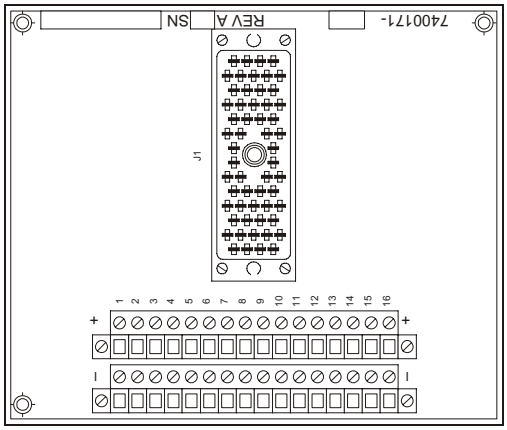

Figure 158 Typical 16-Point Thermocouple Input Term Panel

9765-610 (TC input, upscale/downscale, 16 pts.)

Termination panel 9765–610 is compatible with isolated thermocouple input modules. Each panel has:

- 16 thermocouple input points
- TMR cold-junction temperature sensors
- Upscale/downscale open-input bias circuitry

Specifications

This table describes specifications for 9765–610.

Table 123 Specifications for Term Panel 9765-610

Feature	Description
Panel type	Thermocouple input, upscale or downscale
Points	16

Compatible Modules

This table describes thermocouple input modules compatible with 9765–610.

Table 124 Modules Compatible with 9765-610

Module Part Number	Points per Module	Module Description
3708E	16	Type E, J, K, and T, differential, isolated, DC-coupled, TMR, upscale or downscale open-input detection. (Use TriStation to configure the thermocouple type and specify upscale or downscale open-input detection.)

Field Wiring Diagrams

This figure illustrates how to connect a 16-point thermocouple input module and a 9765–610 to the field (1 of 16 module points shown). See Appendix E, Shield Ground for shield ground installation guidelines.

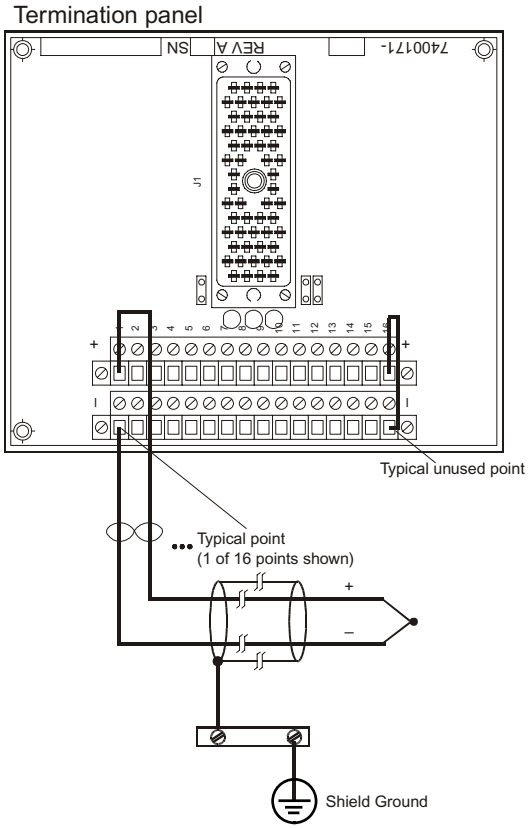

Figure 159 Field Wiring for 9765-610 with a 3708E Thermocouple Input Module

CAUTION Unused points must be shorted together.

Simplified Schematics

This is a simplified schematic of a typical 16-point thermocouple input module with a thermocouple input panel (1 of 16 module points shown).

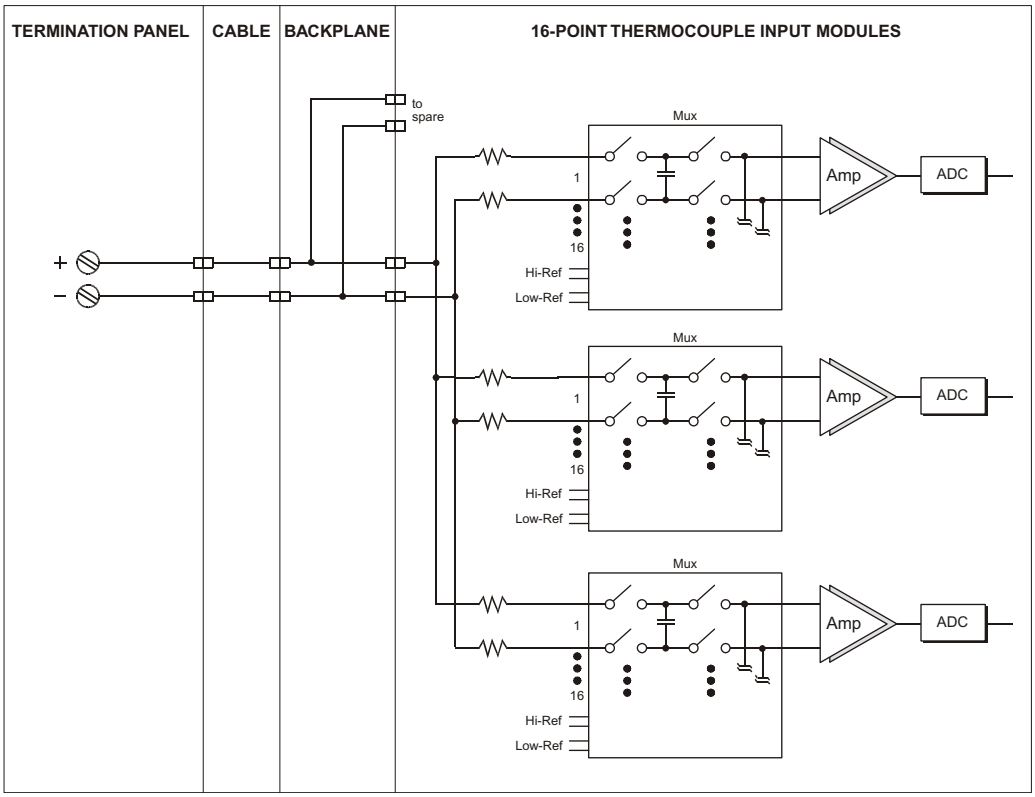

Figure 160 Simplified Schematic of a 3708E Thermocouple Input Module with a 9765-610 Panel

9766-210 (TC input, upscale, 16 pts.)

Termination panel 9766–210 is compatible with non-isolated thermocouple input modules. Each panel has:

- 16 thermocouple input points
- TMR cold-junction temperature sensors
- Upscale open-input bias circuitry

The modules compatible with 9766–210 have 32 points, which means you must use two term panels for each thermocouple input module. Each term panel comes with two sets of labels: 1-16 and 17-32. For information on how to apply the labels, see Appendix F, Panel Labels.

Specifications

This table describes specifications for 9766–210.

Table 125 Specifications for Term Panel 9766-210

Feature	Description
Panel type	Thermocouple input, upscale
Points	16

Compatible Modules

This table describes thermocouple input modules compatible with 9766–210.

Table 126 Modules Compatible with 9766-210

Module Part Number	Points per Module	Module Description
3706A	32	Type J, K, and T, differential, non-isolated, DC-coupled, TMR, upscale open-input detection. (Use TriStation to configure the thermocouple type.)

Field Wiring Diagrams

This figure illustrates how to connect a 32-point thermocouple input module and a 9766–210 to the field (1 of 32 module points shown). See Appendix E, Shield Ground for shield ground installation guidelines.

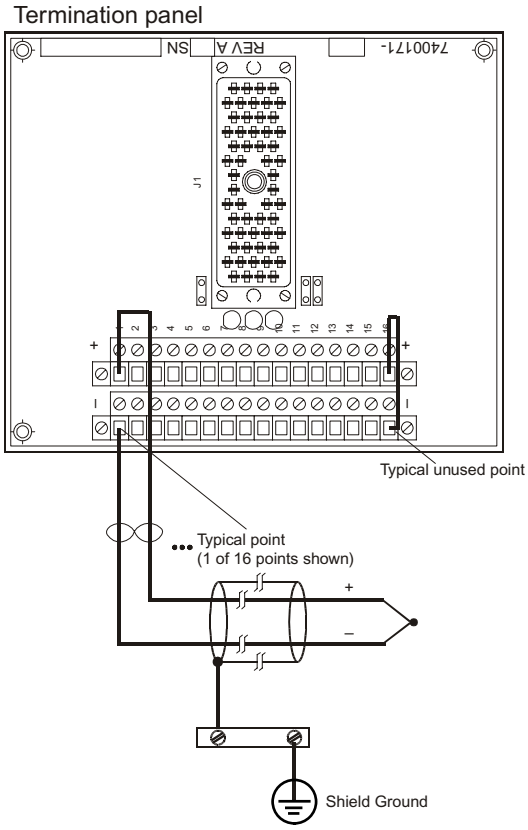

Figure 161 Field Wiring for 9766-210 with a 3706A Thermocouple Input Module

CAUTION Unused points must be shorted together.

Simplified Schematics

This is a simplified schematic of a typical 32-point thermocouple input module with a thermocouple input panel (1 of 32 module points shown).

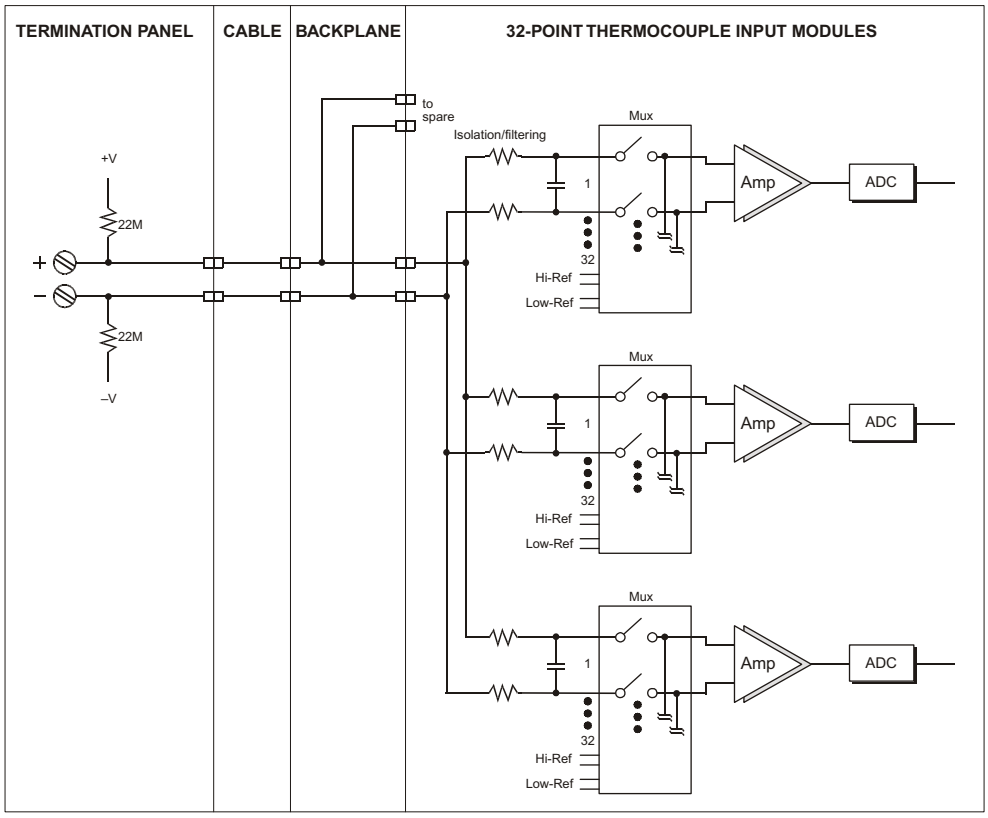

Figure 162 Simplified Schematic of a 3706A Thermocouple Input Module with a 9766-210 Panel

9766-510 (TC input, downscale, 16 pts.)

Termination panel 9766–510 is compatible with non-isolated thermocouple input modules. Each panel has:

- 16 thermocouple input points
- TMR cold-junction temperature sensors
- Downscale open-input bias circuitry

The modules compatible with 9766–510 have 32 points, which means you must use two term panels for each thermocouple input module. Each term panel comes with two sets of labels: 1-16 and 17-32. For information on how to apply the labels, see Appendix F, Panel Labels.

Specifications

This table describes specifications for 9766–510.

Table 127 Specifications for Term Panel 9766-510

Feature	Description
Panel type	Thermocouple input, downscale
Points	16

Compatible Modules

This table describes thermocouple input modules compatible with 9766–510.

Table 128 Modules Compatible with 9766-510

Module Part Number	Points per Module	Module Description
3706A	32	Type J, K, and T, differential, non-isolated, DC-coupled, TMR, upscale open-input detection. (Use TriStation to configure the thermocouple type.)

Field Wiring Diagrams

This figure illustrates how to connect a 32-point thermocouple input module and a 9766–510 to the field (1 of 32 module points shown). See Appendix E, Shield Ground for shield ground installation guidelines.

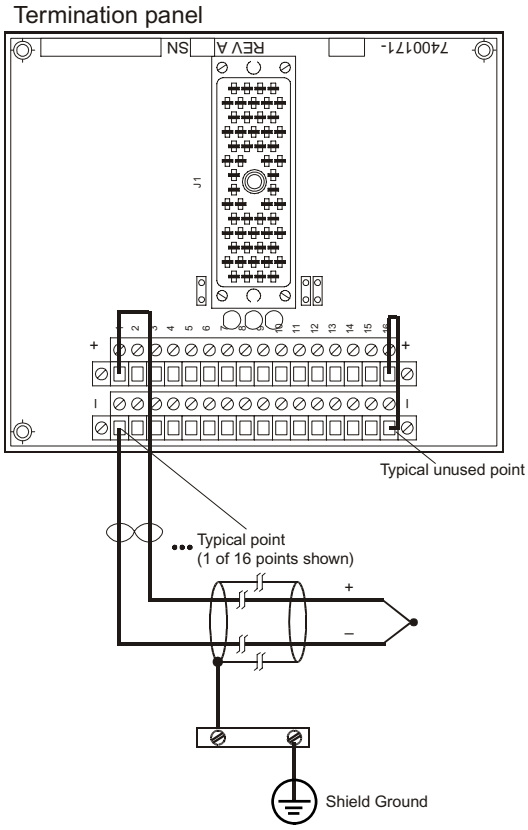

Figure 163 Field Wiring for 9766-510 with a 3706A Thermocouple Input Module

CAUTION Unused points must be shorted together.

Simplified Schematics

This is a simplified schematic of a typical 32-point thermocouple input module with a thermocouple input panel (1 of 32 module points shown).

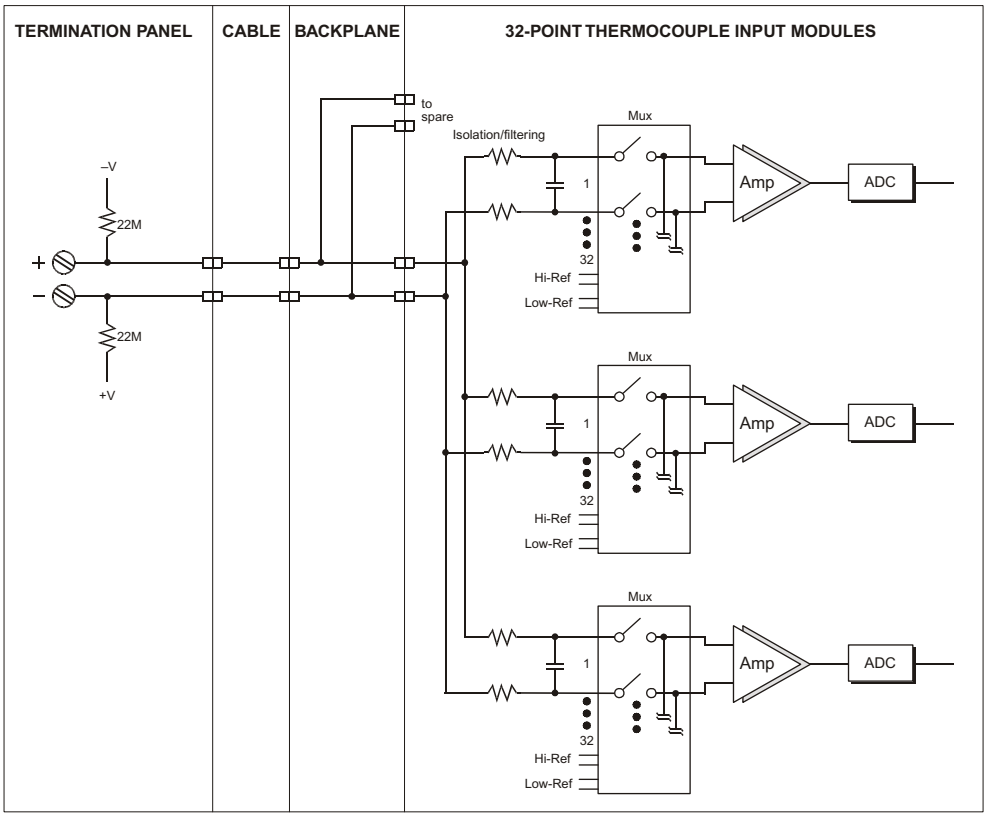

Figure 164 Simplified Schematic of a 3706A Thermocouple Input Module with a 9766-510 Panel

Voltage Input Term Panels

This section describes 16-point and 32-point voltage input term panels. Model numbers of these term panels are:

- 9750-810 (0–5 VDC/0–10 VDC voltage input, basic, 32 pts.)
- 9753-110 (0–5 VDC/0–10 VDC voltage input, basic, 16 pts.)
- 9763-810 (0–5 VDC/0–10 VDC voltage input, 16 pts.)

This figure represents a typical 16-point voltage input basic termination panel.

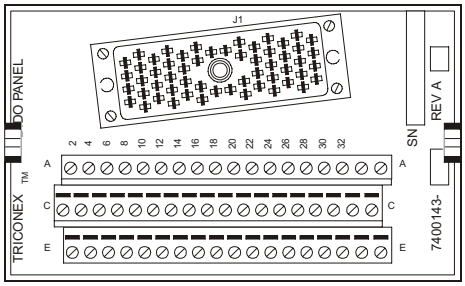

Figure 165 Typical 16-Point Voltage Input Basic Term Panel

This figure represents a typical 16-point voltage input termination panel.

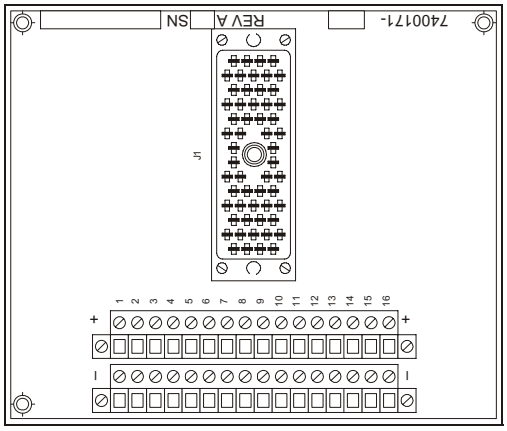

Figure 166 Typical 16-Point Voltage Input Term Panel

This figure represents a typical 32-point voltage input basic termination panel.

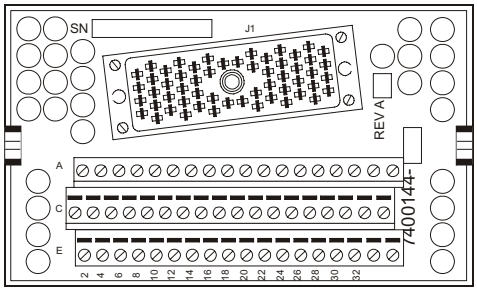

Figure 167 Typical 32-Point Voltage Input Basic Term Panel

9750-810 (0–5 VDC/0–10 VDC voltage input, basic, 32 pts.)

Termination panel 9750–810 is compatible with 0–5 VDC or 0–10 VDC analog input modules and has 32 voltage input terminals (IN+ and IN–) and commoned return terminals (RTN).

The modules compatible with 9750–810 have 64 points, which means you must use two term panels for each analog input module. Each term panel comes with two sets of labels: 1-32 and 33-64. For information on how to apply the labels, see Appendix F, Panel Labels.

Specifications

This table describes specifications for 9750–810.

Table 129 Specifications for Term Panel 9750-810

Feature	Description
Panel type	Voltage input, basic
Points	32

Compatible Modules

This table describes analog input modules compatible with 9750–210.

Table 130 Modules Compatible with 9750-210

Module Part Number	Points per Module	Module Description
3704E	64	0–5 VDC or 0–10 VDC (Use TriStation to configure for 0–5 VDC or 0–10 VDC), commoned, high-density, DC-coupled, TMR
3720	64	0–5 VDC, single-ended, high-density, TMR

Field Wiring Diagrams

This figure illustrates how to connect a 64-point analog input module and a 9750–810 to the field (1 of 64 module points shown).

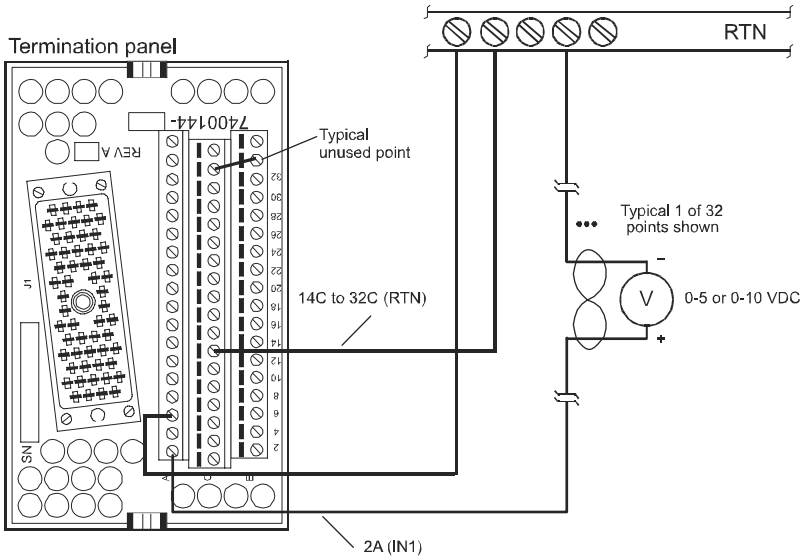

Figure 168 Field Wiring for 9750-810 with a 3704E or 3720 AI Module

CAUTION Unused points must be shorted together.

Simplified Schematics

This is a simplified schematic of a typical 64-point analog input module with a basic current input panel (1 of 64 module points shown).

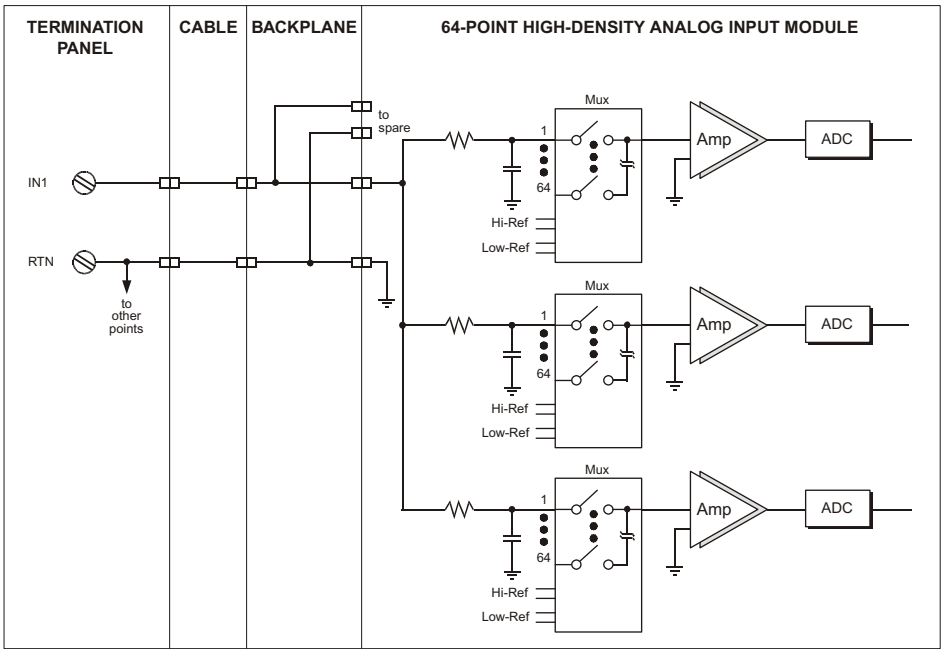

Figure 169 Simplified Schematic of a 3704E or 3720 AI Module with a 9750-810 Panel

9753-110 (0-5 VDC/0-10 VDC voltage input, basic, 16 pts.)

Termination panel 9753–110 is compatible with 0 to 5 VDC, -5 to +5 VDC, or 0 to 10 VDC analog input modules and has 16 voltage input terminals (IN+ and IN–) and commoned return terminals (RTN).

When using 32 point modules, you must use two term panels for each module. Each term panel comes with two sets of labels: 1-16 and 17-32. For information on how to apply the labels, see Appendix F, Panel Labels.

Specifications

This table describes specifications for 9753–110.

Table 131 Specifications for Term Panel 9753-110

Feature	Description
Panel type	Voltage input, basic
Points	16

Compatible Modules

This table describes analog input modules compatible with 9753–110.

Table 132 Modules Compatible with 9753-110

Module Part Number	Points per Module	Module Description
3700	32	0–5 VDC, non-commoned, differential, DC-coupled, TMR
3700A	32	0–5 VDC, non-commoned, differential, DC-coupled, TMR
3701	32	0–10 VDC, non-commoned, differential, DC-coupled, TMR
3703E	16	0–5 VDC or 0–10 VDC (Use TriStation to configure for 0–5 VDC or 0–10 VDC), non-commoned, differential, isolated, TMR
3721	32	0 to 5 VDC or –5 to +5 VDC (Use TriStation to configure input range), differential, DC-coupled, TMR

Field Wiring Diagrams

This figure illustrates how to connect a 16-point or 32-point analog input module and a 9753-110 to the field (1 of 16 or 32 module points shown).

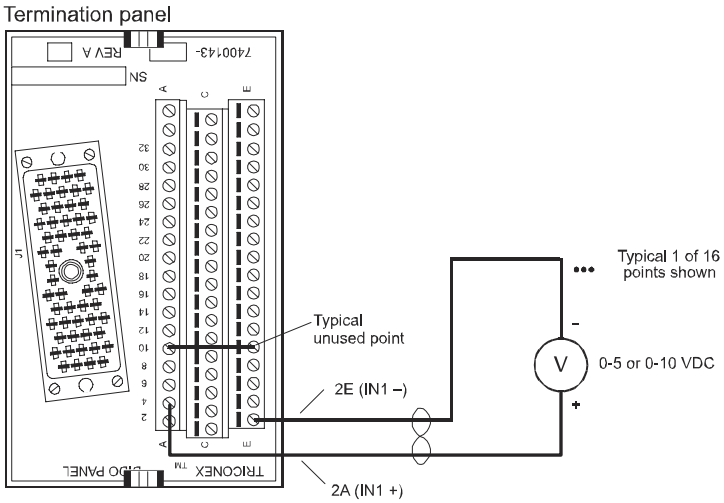

Figure 170 Field Wiring for 9753-110 with a 3700, 3700A, 3701, 3703E, or 3721 AI Module

CAUTION Unused points must be shorted together.

Simplified Schematics

This is a simplified schematic of a typical 32-point analog input module with a basic current input panel (1 of 32 module points shown).

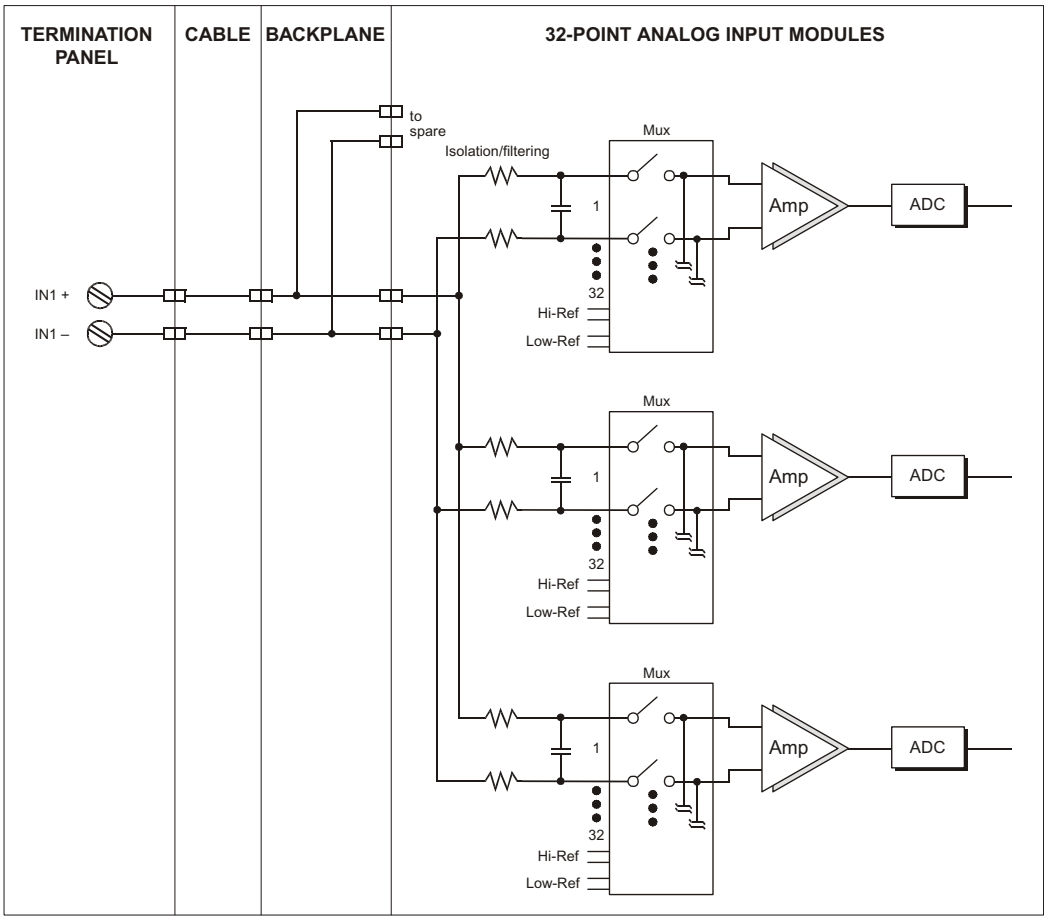

Figure 171 Simplified Schematic of a 3700, 3700A, 3701, or 3721 AI Module with a 9753-110 Panel

This is a simplified schematic of a typical 16-point analog input module with a basic current input panel (1 of 16 module points shown).

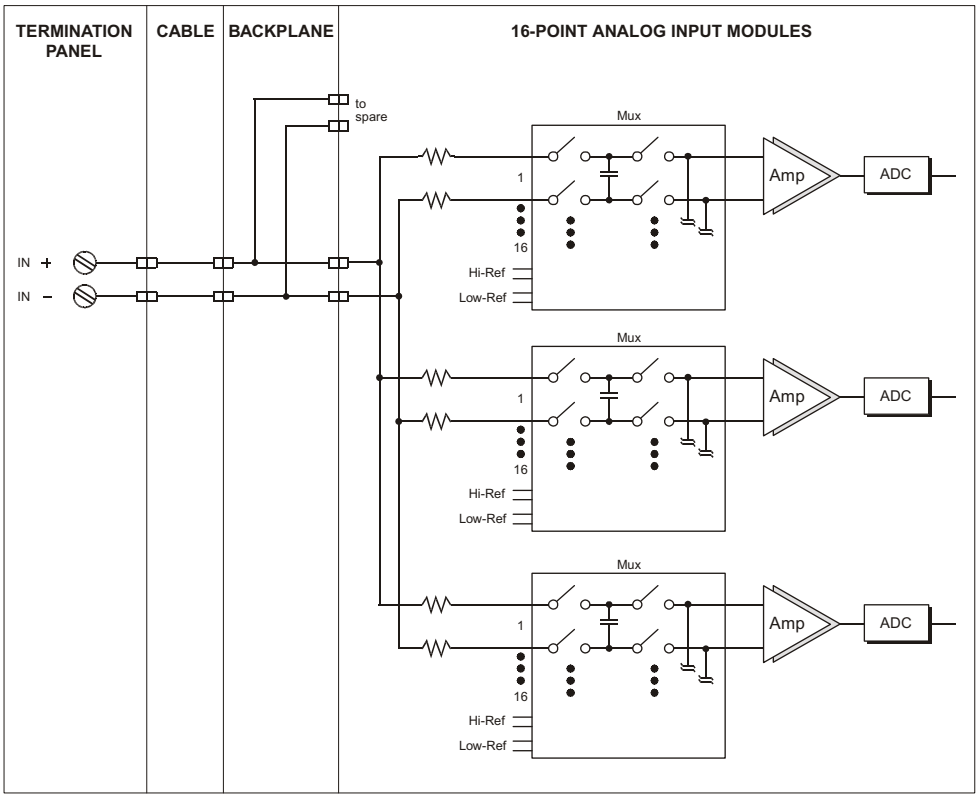

Figure 172 Simplified Schematic of a 3703E AI Module with a 9753-110 Panel

9763-810 (0–5 VDC/0–10 VDC voltage input, 16 pts.)

Termination panel 9763–810 is compatible with 0 to 5 VDC, –5 to +5 VDC, or 0 to 10 VDC analog input modules and has 16 voltage input terminals.

When using 32 point modules, you must use two term panels for each analog input module. Each term panel comes with two sets of labels: 1-16 and 17-32. For information on how to apply the labels, see Appendix F, Panel Labels.

Specifications

This table describes specifications for 9763–810.

Table 133 Specifications for Term Panel 9763-810

Feature	Description
Panel type	Voltage input
Points	16

Compatible Modules

This table describes analog input modules compatible with 9763–810.

Table 134 Modules Compatible with 9763-810

Module Part Number	Points per Module	Module Description
3700	32	0–5 VDC, non-commoned, differential, DC-coupled, TMR
3700A	32	0–5 VDC, non-commoned, differential, DC-coupled, TMR
3701	32	0–10 VDC, non-commoned, differential, DC-coupled, TMR
3703E	16	0–5 VDC or 0–10 VDC (Use TriStation to configure for 0–5 VDC or 0–10 VDC), non-commoned, differential, isolated, TMR
3721	32	0 to 5 VDC or –5 to +5 VDC (Use TriStation to configure input range), differential, DC-coupled, TMR

Field Wiring Diagrams

This figure illustrates how to connect a 16-point or 32-point analog input module and a 9763-810 to the field (1 of 16 or 32 module points shown).

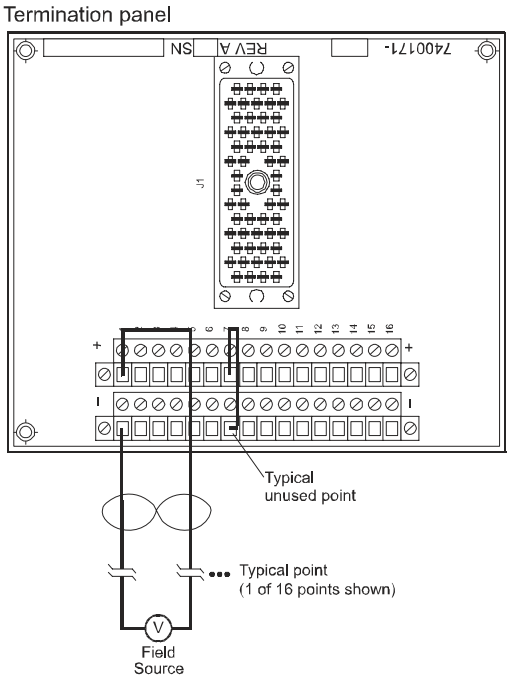

Figure 173 Field Wiring for 9763-810 with a 3700, 3700A, 3701, 3703E, or 3721 AI Module

CAUTION Unused points must be shorted together.

Simplified Schematics

This is a simplified schematic of a typical 32-point analog input module with a voltage input panel (1 of 32 module points shown).

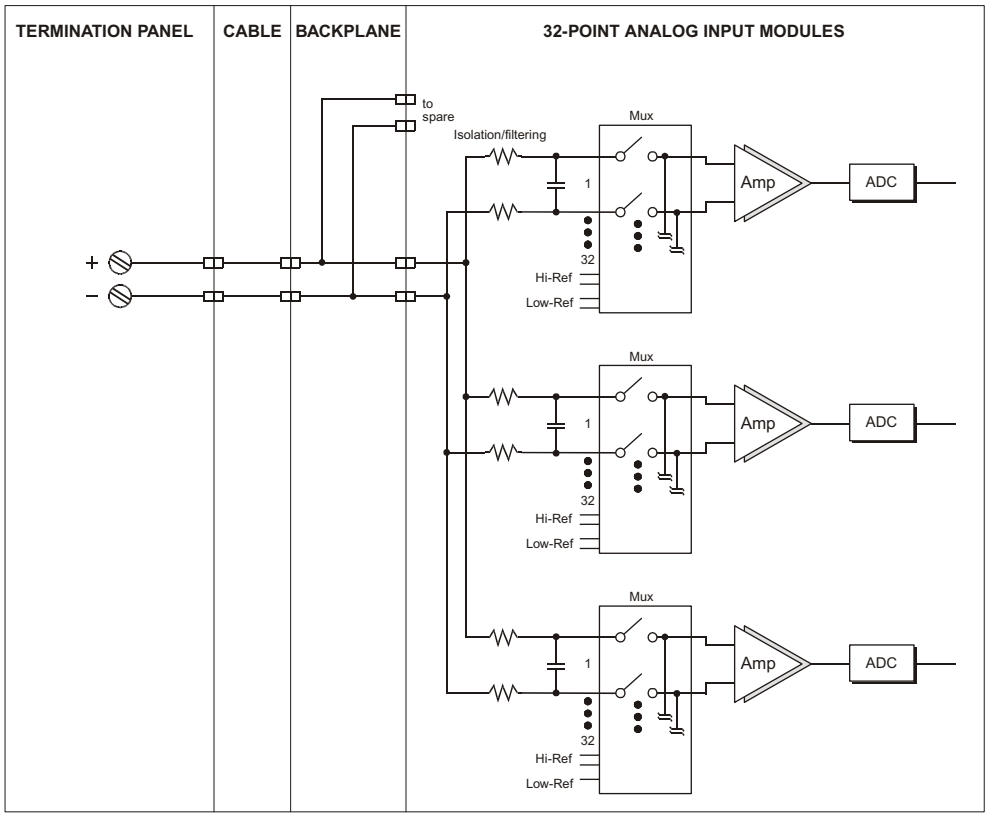

Figure 174 Simplified Schematic of a 3700, 3700A, 3701, or 3721 AI Module with a 9763-810 Panel

This is a simplified schematic of a typical 16-point analog input module with a voltage input panel (1 of 16 module points shown).

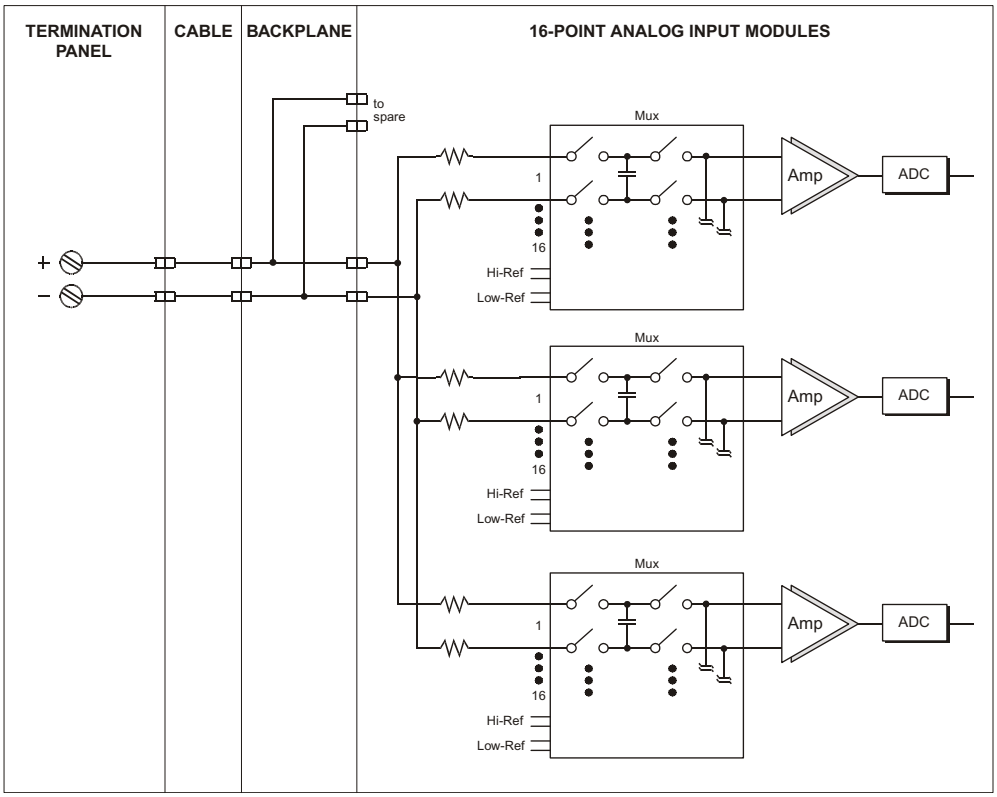

Figure 175 Simplified Schematic of a 3703E AI Module with a 9763-810 Panel

RTD/TC/AI Input Term Panels

This section describes RTD/TC/AI term panels. The model number of these term panels is:

9764-310 (RTD/TC/AI input, 0–5 VDC, 16 pts.)

This figure represents a typical 16-point RTD/TC/AI termination panel.

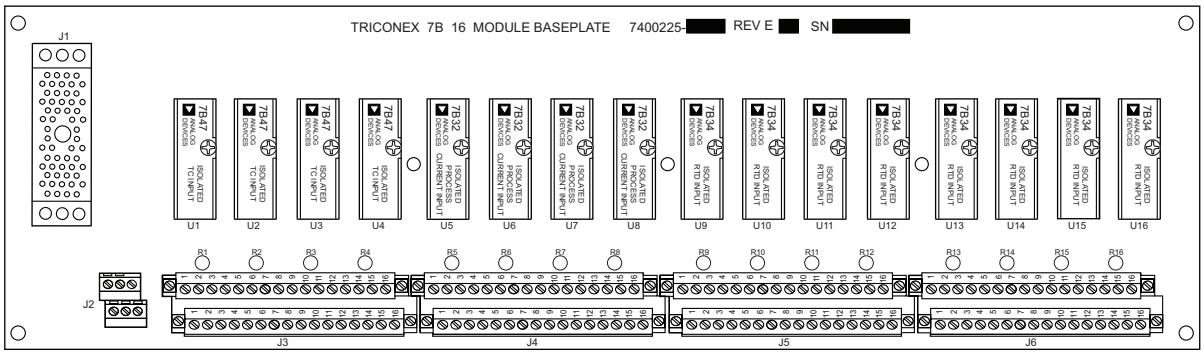

Figure 176 Typical 16-Point RTD/TC/AI Term Panel

9764-310 (RTD/TC/AI input, 0-5 VDC, 16 pts.)

Termination panel 9764–310 is compatible with 0 to 5 VDC or –5 to +5 VDC analog input modules and industry-standard signal conditioning modules. Each panel has:

- 16 input points
- Mounting plate
- Redundant power, signal, and earth ground connections

The panel accepts power from +24 VDC to +28 VDC. Each 24 V power source must be able to provide 0.5 Amps minimally.

The modules compatible with 9764–310 have 32 points, which means you must use two term panels for each analog input module. Each term panel comes with two sets of labels: 1-16 and 17-32. For information on how to apply the labels, see Appendix F, Panel Labels.

Specifications

This table describes specifications for 9764–310.

Table 135 Specifications for Term Panel 9764-310

Feature	Description
Panel type	RTD/TC/AI
Points	16

Compatible Modules

This table describes analog input modules compatible with 9764–310.

Table 136 Analog Input Modules Compatible with 9764-310

Module Part Number	Points per Module	Module Description
3700	32	0–5 VDC, non-commoned, differential, DC-coupled, TMR
3700A	32	0–5 VDC, non-commoned, differential, DC-coupled, TMR
3721	32	0 to 5 VDC or –5 to +5 VDC (Use TriStation to configure input range), differential, DC-coupled, TMR

For more information on analog input modules, see the *Planning and Installation Guide for Tricon v9–v10 Systems*.

The input-signal conditioning modules used on Triconex termination panels are manufactured by Analog Devices™. Signal conditioning modules must be ordered separately and are available from Triconex or directly from Analog Devices.

This table describes temperature and output ranges for available signal conditioning modules. For detailed specifications, visit the Analog Devices Web site.

Table 137 Signal Conditioning Module Temperature and Output Ranges

Description	Input Range	Output Range	Analog Devices Part No. Dataforth Part No.	Triconex Part No.
Isolated, Process Current Input Module	+4 mA to +20 mA	+1 V to +5 V	7B32-011 SCM7B32-01	1600099-001
Isolated, Linearized, RTD Input, 100Ω Platinum, 2- or 3-Wire, α = 0.00385	–148°F to +212°F (–100°C to +100°C)	+1 V to +5 V	7B34-011 SCM7B34-01	1600087-001
	+32°F to +212°F (0°C to +100°C)	+1 V to +5 V	7B34-021 SCM7B34-02	1600088-001
	+32°F to +392°F (0°C to +200°C)	+1 V to +5 V	7B34-031 SCM7B34-03	1600089-001
	+32°F to +1112°F (0°C to +600°C)	+1 V to +5 V	7B34-041 SCM7B34-04	1600090-001
	–58°F to +662°F (–50°C to +350°C)	+1 V to +5 V	7B34-05-1	1600024-080
Isolated, Linearized, RTD Input, 120Ω Nickel, 2- or 3-Wire, α = 0.00672	+32°F to +573°F (0°C to +300°C)	+1 V to +5 V	7B34-N-011 SCM7B34N-01	1600091-001
	+32°F to +392°F (0°C to +200°C)	+1 V to +5 V	7B34-N-021 SCM7B34N-02	1600093-001
Isolated, Linearized, Type J Thermocouple Input Module	+32°F to +1400°F (0°C to +760°C)	+1 V to +5 V	7B47-J-011 SCM7B47J-01	1600095-001
	–148°F to +572°F (–100°C to +300°C)	+1 V to +5 V	7B47-J-02-1	1600024-130

Table 137 Signal Conditioning Module Temperature and Output Ranges *(continued)*

Description	Input Range	Output Range	Analog Devices Part No. Dataforth Part No.	Triconex Part No.
Isolated, Linearized, Type K Thermocouple Input Module	+32°F to +2372°F (0°C to +1300°C)	+1 V to +5 V	7B47-K-031 SCM7B47K-03	1600096-001
	–32°F to +1112°F (0°C to +600°C)	+1 V to +5 V	7B47-K-041 SCM7B47K-04	1600097-001
Isolated, Linearized, Type T Thermocouple Input Module	+32°F to +752°F (0°C to +400°C)	+1 V to +5 V	7B47-T-051 SCM7B47T-05	1600098-001
	–148°F to +392°F (–100°C to +200°C)	+1 V to +5 V	7B47-T-06-1	1600024-200
Isolated, Linearized, Type E Thermocouple Input Module	+32°F to +1652°F (0°C to +900°C)	+1 V to +5 V	7B47-E-071 SCM7B47E-07	1600094-001
Isolated, Linearized, Type R Thermocouple Input Module	+932°F to +3182°F (+500°C to +1750°C)	+1 V to +5 V	7B47-R-08-1	1600024-170
Isolated, Linearized, Type S Thermocouple Input Module	+1292°F to +3182°F (+700°C to +1750°C)	+1 V to +5 V	7B47-S-09-1	1600024-180
Isolated, Linearized, Type B Thermocouple Input Module	+1472°F to +3272°F (+800°C to +1800°C)	+1 V to +5 V	7B47-B-10-1	1600024-100
Isolated, Linearized, Type N Thermocouple Input Module	+392°F to +2372°F (+200°C to +1300°C)	+1 V to +5 V	7B47-N-11-1	1600024-160
Shorting plug for unused points	n/a	n/a	18201	1600048-300

Field Wiring Diagrams

The figures in this section illustrate how to connect a 9764–310 with RTD modules, TC modules, and AI modules to a field device (1 of 16 points shown).

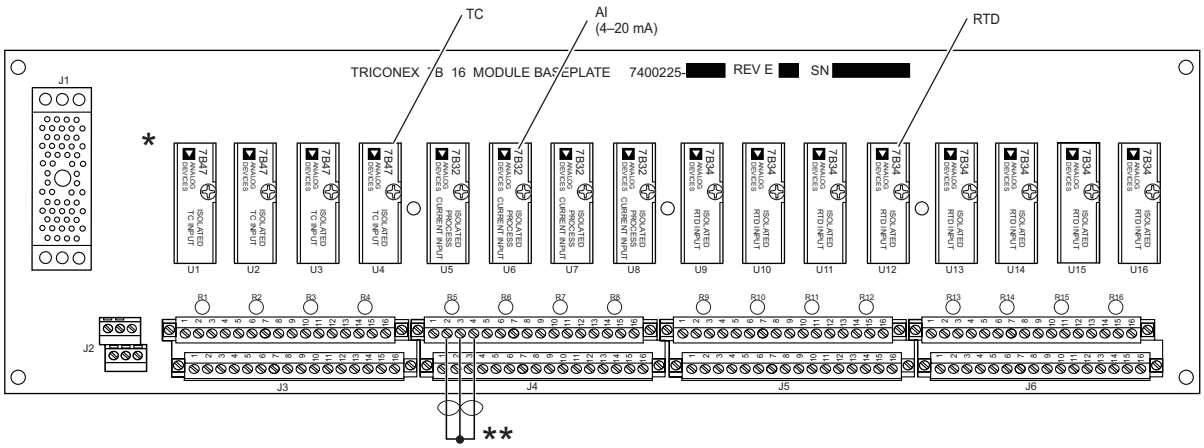

* A signal conditioning module or shorting plug 1600048-300 must be installed on all points.
** Unused points must be shorted at the +, –, and x terminals. The diagram shows a typical point.

Figure 177 9764-310 with RTD/TC/AI Modules

Note A signal-conditioning module shield comes with each 9764-310 termination panel. You must place the shield over the signal conditioning modules to meet EMC requirements.

This figure illustrates how to connect a 9764–310 with RTD input-signal conditioning modules to a field device (1 of 16 points shown).

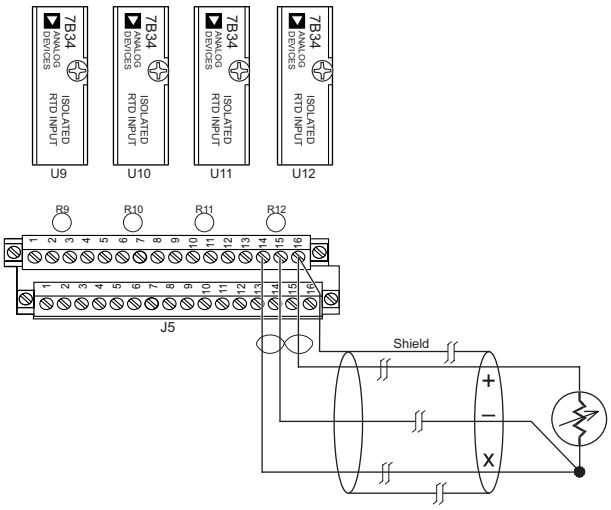

Point #12 Typical, see 9764-310 RTD/TC/AI ETP Pin-Outs on page 223 for other points

Figure 178 Field Wiring for 9764-310 with RTD Module

This figure illustrates how to connect a 9764–310 with TC input-signal conditioning modules to a field device (1 of 16 points shown).

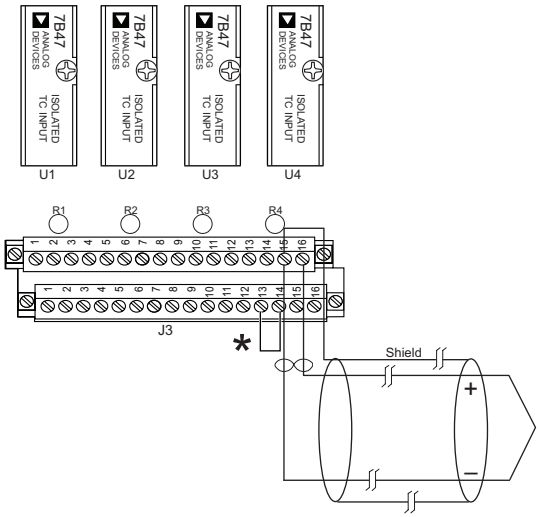

*Install jumper

Point #4 Typical, see 9764-310 RTD/TC/AI ETP Pin-Outs on page 223 for other points

Figure 179 Field Wiring for 9764-310 with TC Module

This figure illustrates how to connect a 9764–310 with AI input-signal conditioning modules to a field device (1 of 16 points shown).

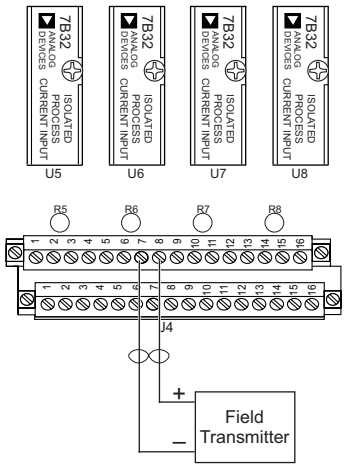

Point #6 Typical, see 9764-310 RTD/TC/AI ETP Pin-Outs on page 223 for other points

Figure 180 Field Wiring for 9764-310 with AI Module

This figure illustrates how to connect power supplies to an RTD/TC/AI panel.

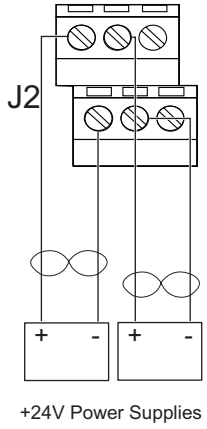

Figure 181 Power Wiring for 9764-310

Pin-Out Information

This table describes the pin-out information for the 9764-310 RTD/TC/AI panel.

Table 138 9764-310 RTD/TC/AI ETP Pin-Outs

Point	Connector	Pin #	TC	RTD	AI
Point 1	J3A (upper)	1	NC[1]	NC	NC
	J3B (lower)	1	Jump	NC	NC
	J3A (upper)	2	NC	X[2]	NC
	J3B (lower)	2	Jump	NC	NC
	J3A (upper)	3	– and SH[3]	–	–
	J3B (lower)	3	NC	NC	NC
	J3A (upper)	4	+	+ and SH	+
	J3B (lower)	4	NC	NC	NC
Point 2	J3A (upper)	5	NC	NC	NC
	J3B (lower)	5	Jump	NC	NC
	J3A (upper)	6	NC	X	NC
	J3B (lower)	6	Jump	NC	NC
	J3A (upper)	7	– and SH	–	–
	J3B (lower)	7	NC	NC	NC
	J3A (upper)	8	+	+ and SH	+
	J3B (lower)	8	NC	NC	NC

Table 138 9764-310 RTD/TC/AI ETP Pin-Outs *(continued)*

Point	Connector	Pin #	TC	RTD	AI
Point 3	J3A (upper)	9	NC	NC	NC
	J3B (lower)	9	Jump	NC	NC
	J3A (upper)	10	NC	X	NC
	J3B (lower)	10	Jump	NC	NC
	J3A (upper)	11	– and SH	–	–
	J3B (lower)	11	NC	NC	NC
	J3A (upper)	12	+	+ and SH	+
	J3B (lower)	12	NC	NC	NC
Point 4	J3A (upper)	13	NC	NC	NC
	J3B (lower)	13	Jump	NC	NC
	J3A (upper)	14	NC	X	NC
	J3B (lower)	14	Jump	NC	NC
	J3A (upper)	15	– and SH	–	–
	J3B (lower)	15	NC	NC	NC
	J3A (upper)	16	+	+ and SH	+
	J3B (lower)	16	NC	NC	NC
Point 5	J4A (upper)	1	NC	NC	NC
	J4B (lower)	1	Jump	NC	NC
	J4A (upper)	2	NC	X	NC
	J4B (lower)	2	Jump	NC	NC
	J4A (upper)	3	– and SH	–	–
	J4B (lower)	3	NC	NC	NC
	J4A (upper)	4	+	+ and SH	+
	J4B (lower)	4	NC	NC	NC
Point 6	J4A (upper)	5	NC	NC	NC
	J4B (lower)	5	Jump	NC	NC
	J4A (upper)	6	NC	X	NC
	J4B (lower)	6	Jump	NC	NC
	J4A (upper)	7	– and SH	–	–
	J4B (lower)	7	NC	NC	NC
	J4A (upper)	8	+	+ and SH	+
	J4B (lower)	8	NC	NC	NC

Table 138 9764-310 RTD/TC/AI ETP Pin-Outs *(continued)*

Point	Connector	Pin #	TC	RTD	AI
Point 7	J4A (upper)	9	NC	NC	NC
	J4B (lower)	9	Jump	NC	NC
	J4A (upper)	10	NC	X	NC
	J4B (lower)	10	Jump	NC	NC
	J4A (upper)	11	– and SH	–	–
	J4B (lower)	11	NC	NC	NC
	J4A (upper)	12	+	+ and SH	+
	J4B (lower)	12	NC	NC	NC
Point 8	J4A (upper)	13	NC	NC	NC
	J4B (lower)	13	Jump	NC	NC
	J4A (upper)	14	NC	X	NC
	J4B (lower)	14	Jump	NC	NC
	J4A (upper)	15	– and SH	–	–
	J4B (lower)	15	NC	NC	NC
	J4A (upper)	16	+	+ and SH	+
	J4B (lower)	16	NC	NC	NC
Point 9	J5A (upper)	1	NC	NC	NC
	J5B (lower)	1	Jump	NC	NC
	J5A (upper)	2	NC	X	NC
	J5B (lower)	2	Jump	NC	NC
	J5A (upper)	3	– and SH	–	–
	J5B (lower)	3	NC	NC	NC
	J5A (upper)	4	+	+ and SH	+
	J5B (lower)	4	NC	NC	NC
Point 10	J5A (upper)	5	NC	NC	NC
	J5B (lower)	5	Jump	NC	NC
	J5A (upper)	6	NC	X	NC
	J5B (lower)	6	Jump	NC	NC
	J5A (upper)	7	– and SH	–	–
	J5B (lower)	7	NC	NC	NC
	J5A (upper)	8	+	+ and SH	+
	J5B (lower)	8	NC	NC	NC

Table 138 9764-310 RTD/TC/AI ETP Pin-Outs *(continued)*

Point	Connector	Pin #	TC	RTD	AI
Point 11	J5A (upper)	9	NC	NC	NC
	J5B (lower)	9	Jump	NC	NC
	J5A (upper)	10	NC	X	NC
	J5B (lower)	10	Jump	NC	NC
	J5A (upper)	11	– and SH	–	–
	J5B (lower)	11	NC	NC	NC
	J5A (upper)	12	+	+ and SH	+
	J5B (lower)	12	NC	NC	NC
Point 12	J5A (upper)	13	NC	NC	NC
	J5B (lower)	13	Jump	NC	NC
	J5A (upper)	14	NC	X	NC
	J5B (lower)	14	Jump	NC	NC
	J5A (upper)	15	– and SH	–	–
	J5B (lower)	15	NC	NC	NC
	J5A (upper)	16	+	+ and SH	+
	J5B (lower)	16	NC	NC	NC
Point 13	J6A (upper)	1	NC	NC	NC
	J6B (lower)	1	Jump	NC	NC
	J6A (upper)	2	NC	X	NC
	J6B (lower)	2	Jump	NC	NC
	J6A (upper)	3	– and SH	–	–
	J6B (lower)	3	NC	NC	NC
	J6A (upper)	4	+	+ and SH	+
	J6B (lower)	4	NC	NC	NC
Point 14	J6A (upper)	5	NC	NC	NC
	J6B (lower)	5	Jump	NC	NC
	J6A (upper)	6	NC	X	NC
	J6B (lower)	6	Jump	NC	NC
	J6A (upper)	7	– and SH	–	–
	J6B (lower)	7	NC	NC	NC
	J6A (upper)	8	+	+ and SH	+
	J6B (lower)	8	NC	NC	NC

Table 138 9764-310 RTD/TC/AI ETP Pin-Outs *(continued)*

Point	Connector	Pin #	TC	RTD	AI
Point 15	J6A (upper)	9	NC	NC	NC
	J6B (lower)	9	Jump	NC	NC
	J6A (upper)	10	NC	X	NC
	J6B (lower)	10	Jump	NC	NC
	J6A (upper)	11	– and SH	–	–
	J6B (lower)	11	NC	NC	NC
	J6A (upper)	12	+	+ and SH	+
	J6B (lower)	12	NC	NC	NC
Point 16	J6A (upper)	13	NC	NC	NC
	J6B (lower)	13	Jump	NC	NC
	J6A (upper)	14	NC	X	NC
	J6B (lower)	14	Jump	NC	NC
	J6A (upper)	15	– and SH	–	–
	J6B (lower)	15	NC	NC	NC
	J6A (upper)	16	+	+ and SH	+
	J6B (lower)	16	NC	NC	NC

1. NC = No connect
2. X = Third wire (sense signal)
3. SH = Shield

Simplified Schematics

This is a simplified schematic of a typical 32-point analog input module with a RTD/TC/AI panel (1 of 32 module points shown).

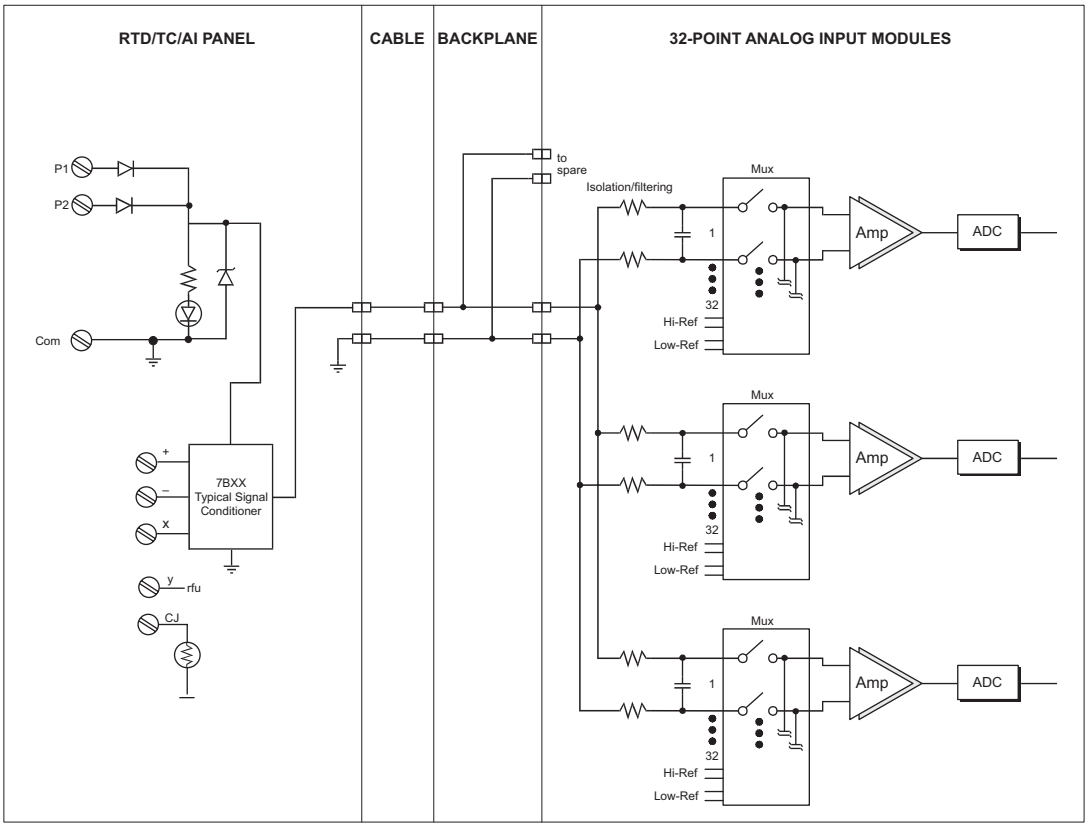

* LEDs are blown-fuse indicators.

Figure 182 Simplified Schematic of a 3700 or 3700A AI Module with a 9764-310 (RTD/TC/AI) Panel

Analog Output Term Panels

This section describes analog output term panels. Model numbers of these term panels are:

- 9863-710 (3806E module, 8 pts.)
- 9853-610 (current output, basic, 8 pts.)
- 9871-810 (3807 module, 4 pts.)

This figure represents a typical current output termination panel.

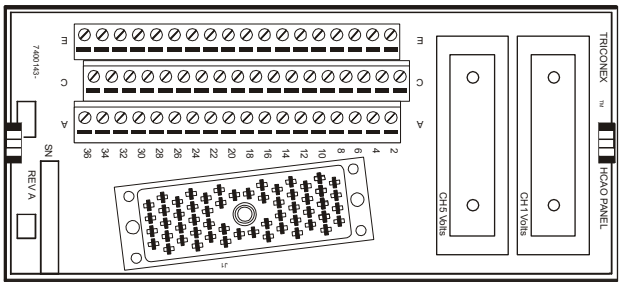

Figure 183 Typical Current Output Term Panel

This figure represents a typical basic current output termination panel.

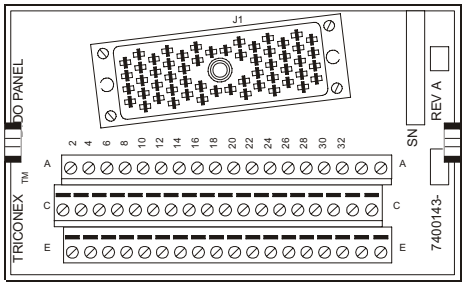

Figure 184 Typical Basic Current Output Term Panel

This figure represents a typical BiPolar Analog Output termination panel.

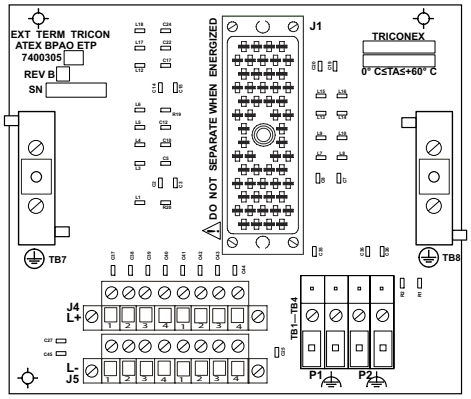

Figure 185 Typical BiPolar Analog Output Term Panel

9863-710 (3806E module, 8 pts.)

Termination panel 9863-710 is for use only with the 3806E analog output module. Each panel has:

- Two dual-coil 20–320 mA output terminals (OUT and RTN)
- Two 4–20 mA output terminals for monitoring dual-coil output voltages
- Two voltage/current converters
- Six 4–20 mA output terminals (OUT and RTN)
- Terminals for connecting redundant 24 VDC power supplies

Specifications

This table describes specifications for 9863-710.

Table 139 Specifications for Term Panel 9863-710

Feature	Description
Panel type	Analog output
Points	8

Compatible Modules

This table describes analog output modules compatible with 9863-710.

Table 140 Modules Compatible with 9863-710

Module Part Number	Points per Module	Module Description
3806E	8	6 4–20 mA outputs, 2 20–320 mA outputs, commoned-return, DC-coupled, TMR

Field Wiring Diagrams

This figure illustrates how to connect 9863-710 and 4–20 mA outputs to the field. See Figure 189 High-Current Circuits (page 235) for how to connect to the 20–360 mA outputs.

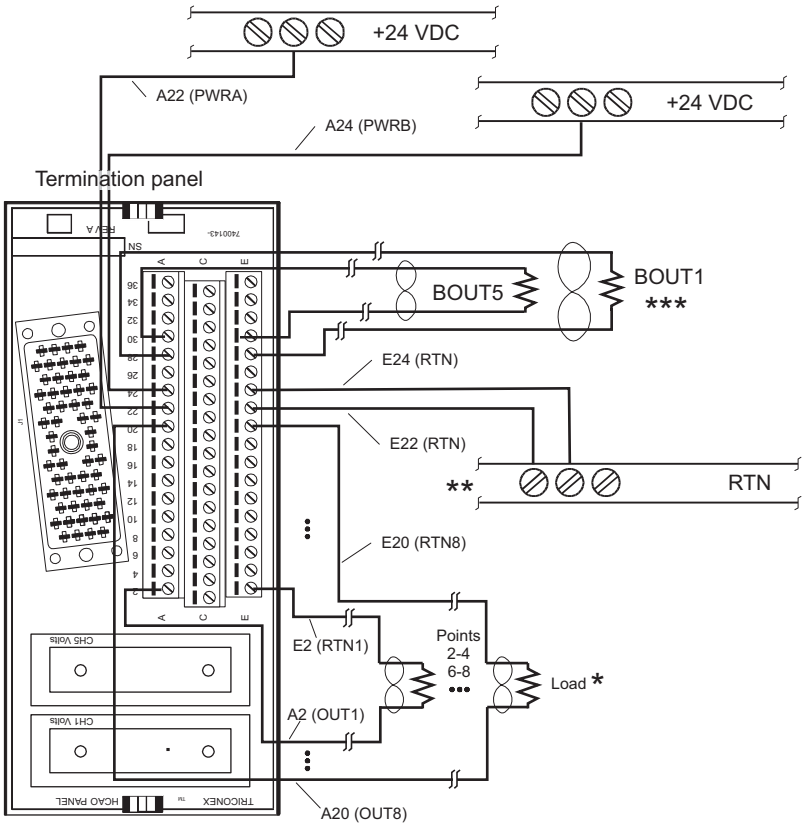

* A shorting jumper must be connected to each unused point.
** One RTN connection is required. More than one is okay.
*** Typically connected to current analog input point to monitor 20–320 mA output voltages.

Figure 186 Field Wiring for 9863-710 with a 3806E AO Module

Simplified Schematics

This is a simplified schematic of a typical 3806E analog output module with a 9863-710 panel (1 of 8 module points shown).

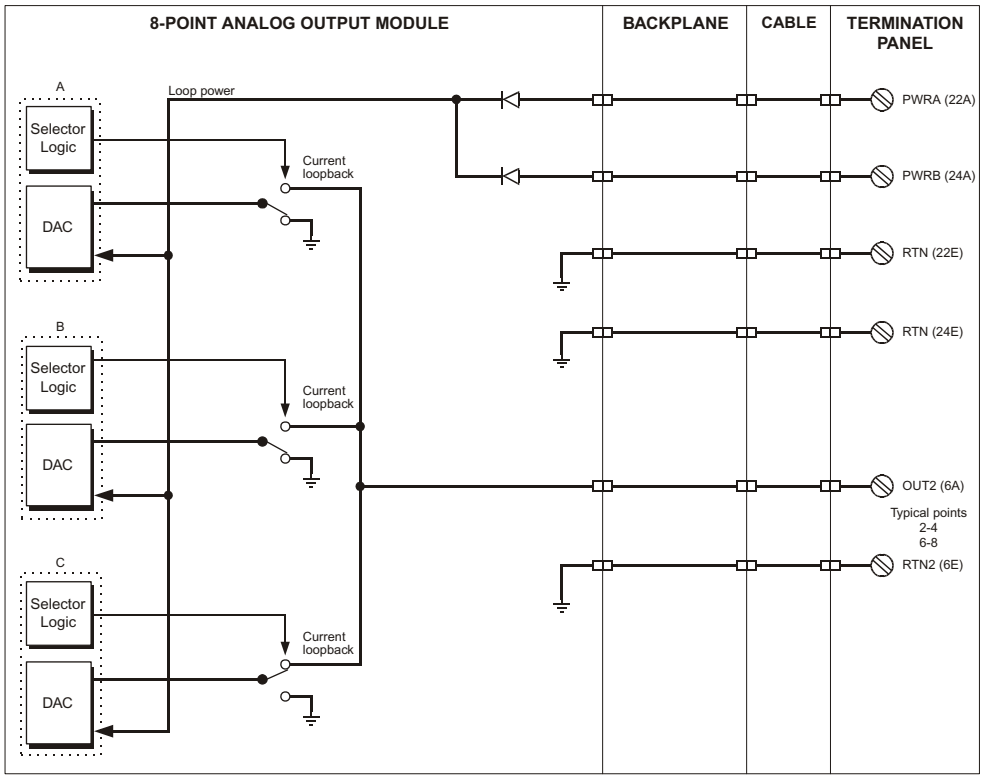

Figure 187 Simplified Schematic of 3806E AO Module with a 9863-710 Panel

Pin-Outs

This table describes pin-outs for the 9863-710.

Table 141 9863-710 Pin-Outs

Label	Pin No.	Signal	Description
A2	AA	OUT1A	Channel 1A out
E2	LL	RTN1A	Channel 1A return
A4	AA	OUT1B	Channel 1B out
E4	LL	RTN1B	Channel 1B return
A6	z	OUT2	Channel 2 out
E6	EE	RTN2	Channel 2 return
A8	p	OUT3	Channel 3 out
E8	v	RTN3	Channel 3 return
A10	h	OUT4	Channel 4 out
E10	l	RTN4	Channel 4 return
A12	e	OUT5A	Channel 5A out
E12	b	RTN5A	Channel 5A return
A14	e	OUT5B	Channel 5B out
E14	b	RTN5B	Channel 5B return
A16	W	OUT6	Channel 6 out
E16	S	RTN6	Channel 6 return
A18	L	OUT7	Channel 7 out
E18	F	RTN7	Channel 7 return
A20	M	OUT8	Channel 8 out
E20	B	RTN8	Channel 8 return
A22	t	PWRA	Power A +
E22	x	RTN	Power A –
A24	j	PWRB	Power B +
E24	m	RTN	Power B –
A28		VT1+	Channel 1 V-to-I Out
E28		VT1-	Channel 1 V-to-I Return
A30		VT5+	Channel 5 V-to-I Out
E30		VT5-	Channel 5 V-to-I Return
A34	T	CGND	Chassis Ground
C34	H	CGND	Chassis Ground

Table 141 9863-710 Pin-Outs *(continued)*

Label	Pin No.	Signal	Description
E34	w	CGND	Chassis Ground
A36	FF	CGND	Chassis Ground

Note CGND is the controller chassis ground (functional earth). Pins r, s, X and Y on the panel connector are not used.

Dual-Coil Actuator

A single high-current analog output supplies the signal for both coils of the dual coil actuator. The current is divided according to the impedance of the two coils.

The power produced by the actuator coils is a function of the number of coils and the current through them. If only one coil is used, the current must double to maintain the same power.

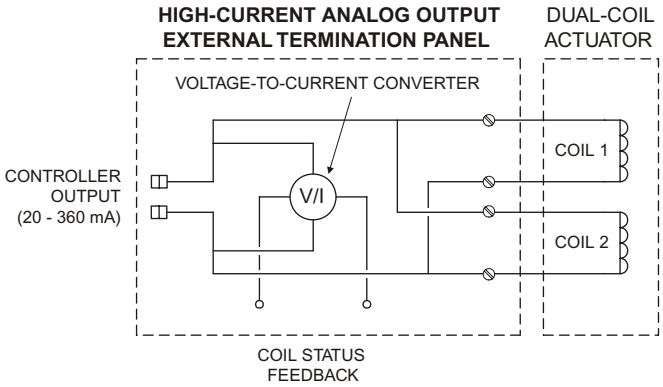

Figure 188 High-Current AO Termination Panel Assembly

Because the controller output is a constant current, failure of one coil diverts all the current through the remaining coil, thus maintaining the correct actuator output. For example: If the controller output is 160 mA and the coil impedance is equal, the controller output is split evenly, supplying 80 mA to each coil. If one coil fails, all of the controller output current goes to the remaining good coil, effectively doubling the force that the failed coil produced before the failure.

The voltage-to-current converter across the controller output responds to changes in the output voltage that would result from the loss of a coil. The volt/amp characteristics of the good coils are programmed into the controller. A significant deviation in the volt/amp characteristics causes an alarm to be issued.

This is a simplified schematic of the high-current circuits.

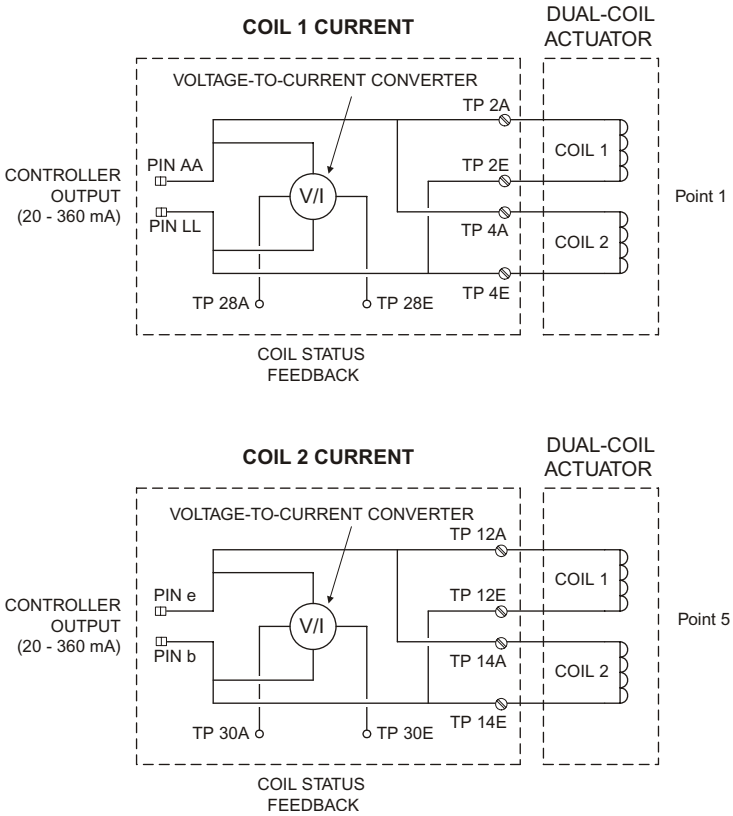

Figure 189 High-Current Circuits

Voltage-to-Current Converter

This is a simplified schematic of a voltage-to-current converter.

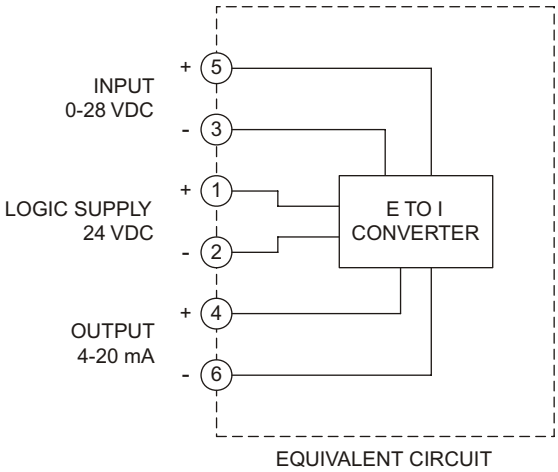

Figure 190 Simplified Schematic of a Voltage-to-Current Converter

This table describes specifications for the voltage-to-current converter.

Table 142 Voltage-to-Current Converter Specifications

Feature	Specification
Voltage	24 VDC, nominal (20–28 VDC maximum range)
Current	20 mA quiescent, with V_{supply} = 24 V, V_{in} = 0, R_L = 0, I_s = 4 mA
Input impedance	1 MW Differential Mode 850 kΩ Common Mode
Input voltage range for 4–20 mA out	0–20 V
Maximum input voltage, either terminal with respect to power supply common	± 100 V continuous ± 200 V pulsed, 0.5 second, 2% duty cycle
Differential mode frequency response	–6 dB/octave from 1 kHz to 8 kHz –12 dB/octave above 8 kHz
Common mode frequency response	–12 dB/octave above 8 kHz
Output range	4–20 mA for 0–20 V input
Maximum load resistance	750 W with V_{supply} = 24 V
Offset and linearity	± 0.1 mA maximum over entire range
Power supply sensitivity	Output varies less than ± 0.1 mA over entire range, into 500 Ω load, for 20 V < V_{supply} < 28 V

9853-610 (current output, basic, 8 pts.)

Termination panel 9853–610 is compatible with 4–20mA output modules and HART analog output interface modules. Each panel has:

- 8 current output terminals (OUT)
- 8 current return terminals (RTN)
- Terminals for connecting redundant 24 VDC power supplies

Specifications

This table describes specifications for 9853–610.

Table 143 Specifications for Term Panel 9853-610

Feature	Description
Panel type	Current output, basic
Points	8

Compatible Modules

This table describes analog output modules compatible with 9853–610.

Table 144 Modules Compatible with 9853-610

Module Part Number	Points per Module	Module Description
2870H	8	HART analog output interface module
3805E/H	8	4–20 mA, commoned-return, DC-coupled, TMR

Field Wiring Diagrams

This figure illustrates how to connect an 8-point analog output module or HART analog output interface module and a 9853–610 to the field (1 of 8 module points shown).

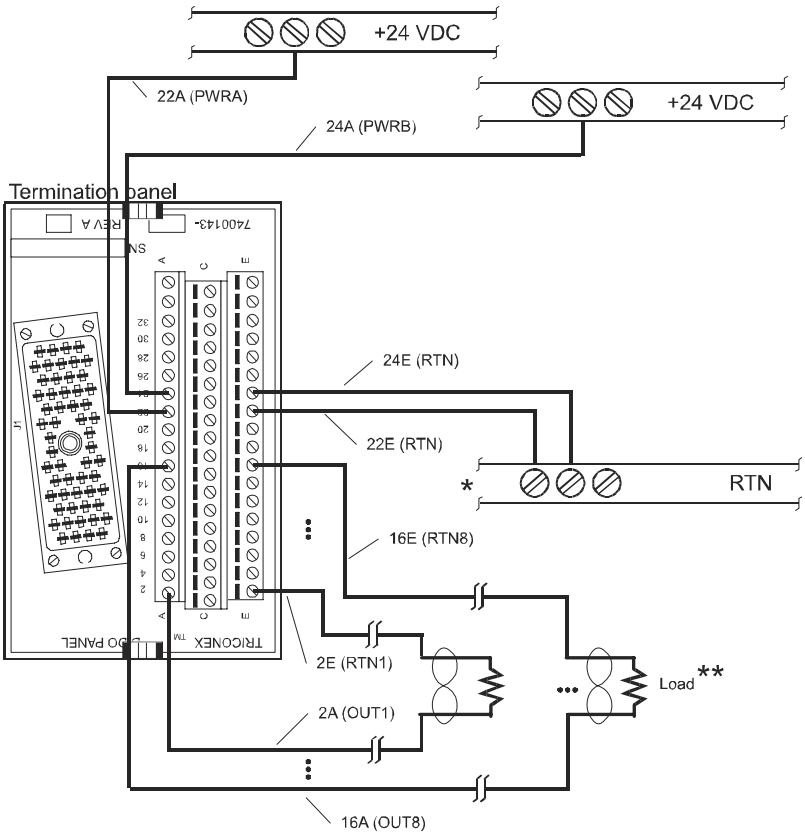

* One RTN connection is required. More than one is okay.
** A shorting jumper must be connected to each unused point.

Figure 191 Field Wiring for 9853-610 with a 3805E or 3805H AO Module or 2870H HART AO Interface Module

Note For additional instructions on installing HART Interface Modules, see the *Planning and Installation Guide for Tricon v9–v10 Systems*.

Simplified Schematics

This is a simplified schematic of a typical 8-point commoned-return analog output module with a basic current output panel (1 of 8 module points shown).

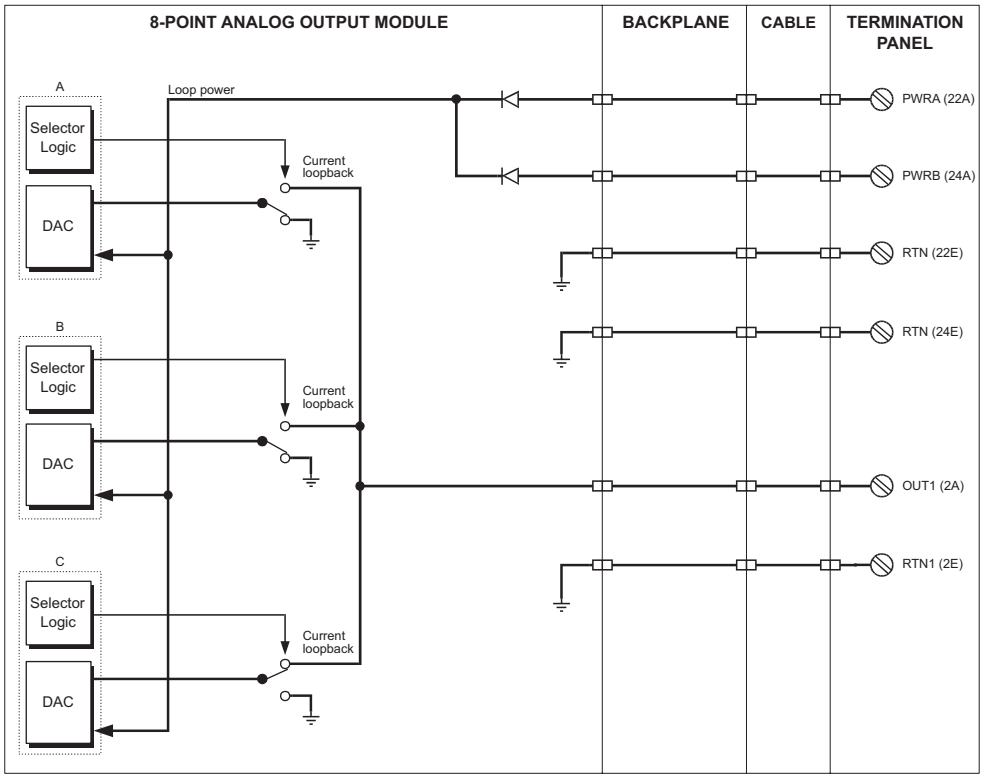

Figure 192 Simplified Schematic of a 3805E or 3805H AO Module with a 9853-610 Panel

This is a simplified schematic of a Model 2870H HART Analog Output Interface Module with a basic current output panel (1 of 8 module points shown).

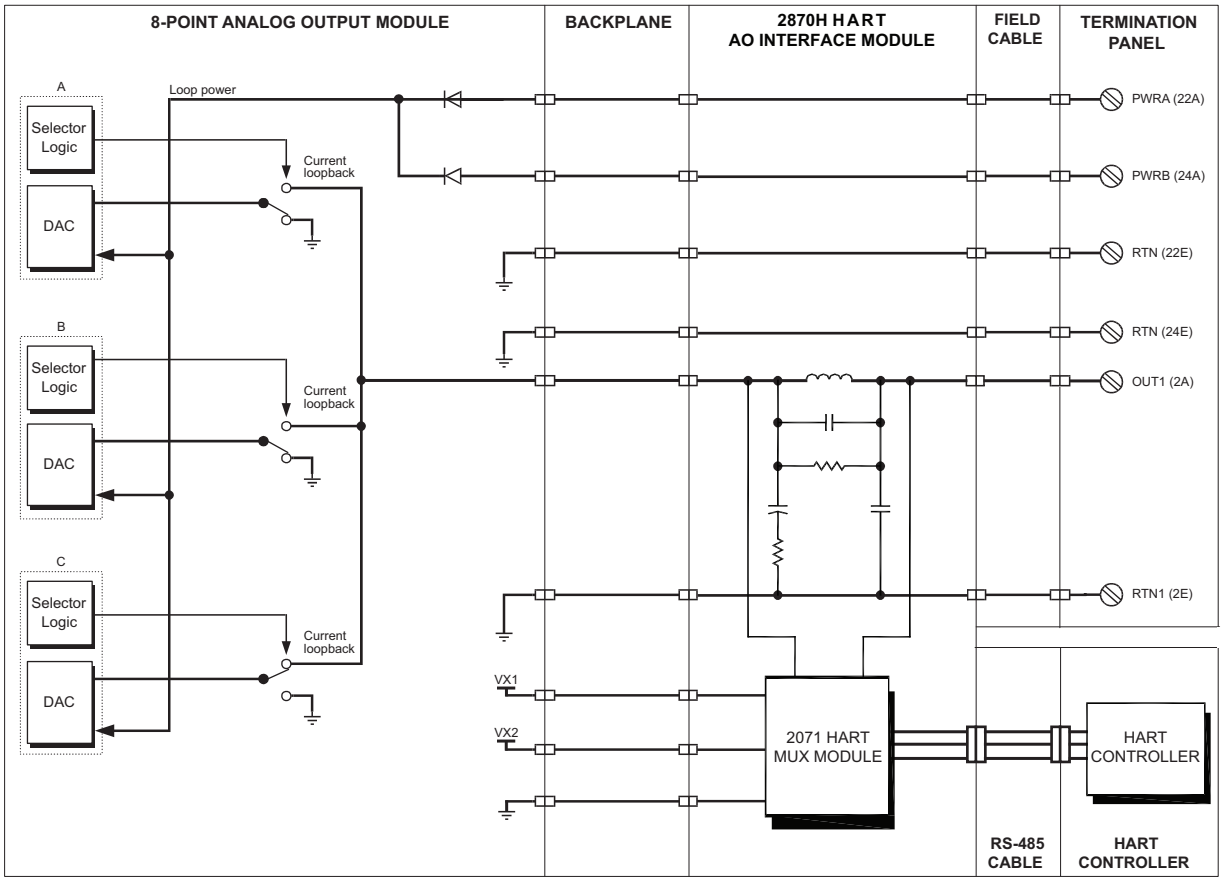

Figure 193 Simplified Schematic of a 2870H HART AO Interface Module with a 3805E or 3805H AO Module and a 9853-610 Panel

9871-810 (3807 module, 4 pts.)

Termination panel 9871–810 is compatible with the 3807 BiPolar Analog Output module. Each panel has:

- Two, eight position field terminals; support for four points and four redundant point connections
- Two terminals per point: Out, Rtn (L+, L–)
- Per point snubbers suitable for inductive loads up to 1.0 Henry
- A four-position terminal for redundant 24 VDC loop power
- Two, one-position terminals for protective earth connection

Specifications

This table describes specifications for 9871–810.

Table 145 Specifications for Term Panel 9871-810

Feature	Description
Panel type	Current output
Points	4 with 4 redundant connections

Compatible Modules

This table describes the analog output module compatible with 9871–810.

Table 146 Module Compatible with 9871-810

Module Part Number	Points per Module	Module Description
3807	4 analog output	-60 to 60 mA analog outputs, commoned-return, DC-coupled, TMR with coil-diagnostic inputs

Field Wiring Diagrams

This figure illustrates how to connect a 3807 BiPolar Analog Output module and a 9871–810 to the field (1 of 4 module points shown).

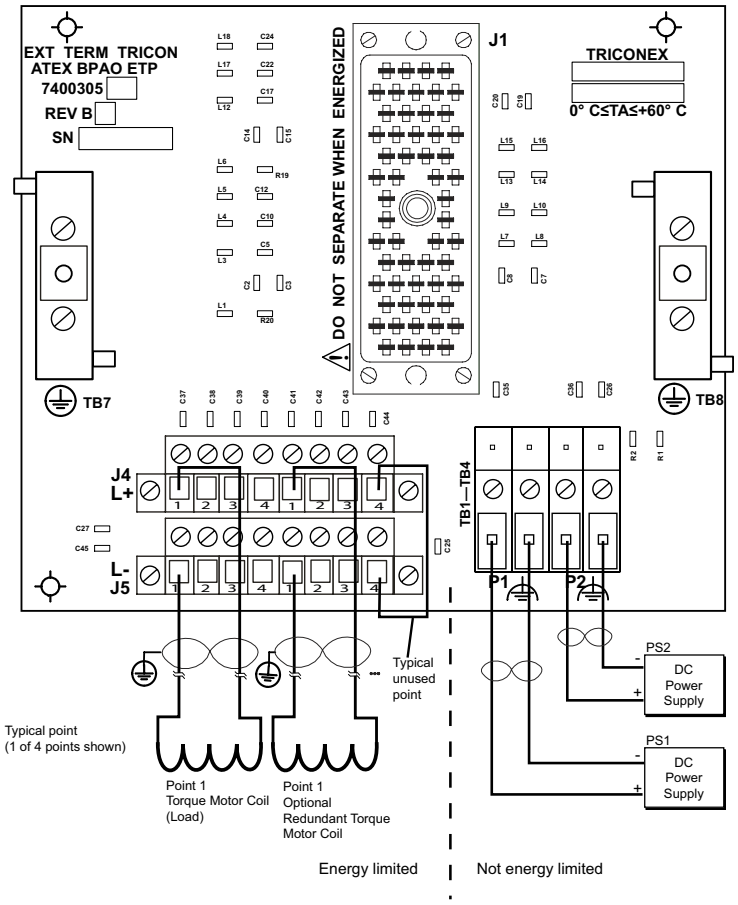

Figure 194 Field Wiring for 9871-810 with a 3807 BiPolar AO Module

CAUTION

- Unused points must be shorted together.
- If the I/O cable (the cable that connects the termination panel to the Tricon backplane) goes outside the cabinet that houses the Tricon chassis, the I/O cable should be routed in a metal conduit.

Simplified Schematics

This is a simplified schematic of a typical 4-point BiPolar Analog Output module with an analog output panel (1 of 4 module points shown with 1.0 Henry snubber 301 Ω, 680 nF). The connection to the coil-diagnostic input is hardwired on the termination panel.

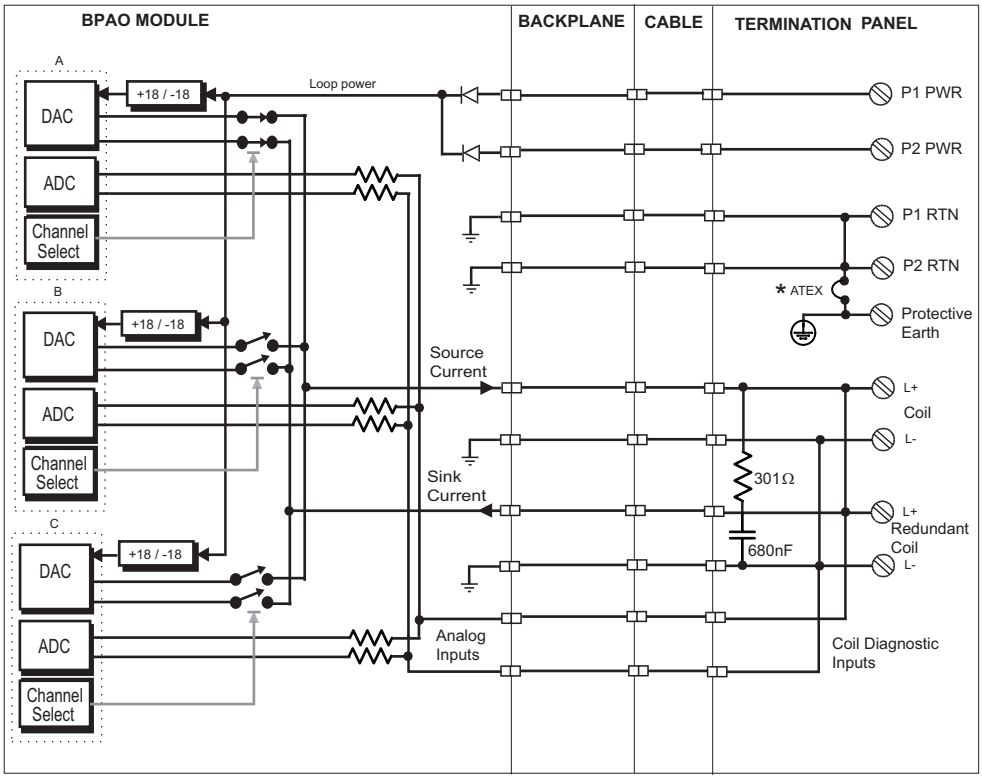

* Shown with ATEX Field Return to Protective Earth (chassis ground) jumper installed

Figure 195 Simplified Schematic of a 3807 BiPolar AO Module with a 9871-810 Panel

6

Hazardous Location (Nonincendive) Termination Panels

Overview 244

Field Wiring in Hazardous Locations 245

Analog Input Term Panels 246

Analog Output Term Panels 268

Digital Input Term Panels 275

Digital Output Term Panels 286

Pulse Input Term Panels 292

Overview

This chapter describes external field termination panels (ETPs) with nonincendive circuits that you can use in hazardous locations.

This table identifies ETPs that use nonincendive circuits as approved by TÜV Rhineland.

Table 147 Nonincendive External Termination Panels

Term Panel Type	Term Panel Model	Description
Analog Input	9791-610	4-20 mA, 0–5 VDC, 16 pts.
	9787-110	0-5 VDC voltage input, 16 pts.
	9785-610	TC input, downscale, 16 pts.
	9784-610	TC input, upscale, 16 pts.
	9786-110	TC input, isolated, 16 pts.
	9789-610	4-20 mA, high-density, 32 pts.
Analog Output	9861-610	3805E/H module, 8 pts.
	9871-810	3807 module, 4 pts.
Digital Input	9572-610	24 VDC, commoned, 16 pts.
	9570-610	24 VDC, high-density, 32 pts.
	9571-610	24 VDC, fail-safe, 32 pts.
Digital Output	9671-610	24 VDC, commoned, supervised, 16 pts.
Pulse Input	9793-110	8 pts.

Field Wiring in Hazardous Locations

The external termination panels (ETPs) described in this chapter are suitable for use in Zone 2, and Class 1, Division 2 field circuits. These ETPs contain extra circuitry designed to limit power available to the field terminals. These circuits have been examined and certified by TÜV Rhineland as being nonincendive. This guarantees that if the field wires are accidentally opened, shorted, or grounded, and the Tricon is operating normally, the wiring and attached devices will not release sufficient energy to cause ignition in the specified flammable atmosphere.

Cable and Load Parameters (Entity Parameters)

To ensure that the field circuits are incapable of igniting a specified flammable vapor atmosphere, the size of the cable and load parameters must be known and controlled. The Cable and Load Parameters tables in each termination panel section identify the maximum permissible values of the parameters for each termination panel.

Electrical Code Approval

The ETPs and associated field wiring in hazardous locations must be installed per the requirements of the prevailing local electrical codes and the instructions in chapter 3 of the *Planning and Installation Guide for Tricon v9–v10 Systems*.

In Europe, the ETPs listed in this chapter are in full compliance with the ATEX Directive and are suitable for use in Zone 2 Group IIB hazardous locations per the requirements of EN 60079-15, Electrical apparatus for explosive gas atmospheres - Part 15: Type protection “n”.

In North America, the ETPs listed in this chapter are suitable for use in Class 1, Division 2 Groups C and D hazardous locations per the requirements of ANSI/ISA S12.12.01-2000, Nonincendive Electrical Equipment for Use in Class I and II, Division 2 and Class III, Divisions 1 and 2 Hazardous (Classified) Locations.

Analog Input Term Panels

This section describes analog input termination panels. Model numbers include:

- 9791-610 (4-20 mA, 0–5 VDC, 16 pts.)
- 9787-110 (0-5 VDC voltage input, 16 pts.)
- 9785-610 (TC input, downscale, 16 pts.)
- 9784-610 (TC input, upscale, 16 pts.)
- 9786-110 (TC input, upscale/downscale, 16 pts.)
- 9789-610 (4-20 mA, high-density, 32 pts.)

9791-610 (4-20 mA, 0-5 VDC, 16 pts.)

Termination panel 9791-610 is compatible with 0 to 5 VDC analog input modules and HART analog input interface modules. Each panel has:

- Two, sixteen-position field terminals; support for 16 points
- Two terminals per point, for 4-20 mA transmitter (F+, F–)
- A four-position terminal for redundant 24 VDC loop power
- Two, one-position terminals for protective earth connection

Each positive terminal is current-limited with a 190-to-310-ohm series resistor. Each input has a precision 250-ohm resistor for 0-to-5 VDC current-to-voltage conversion.

The panel supports redundant 24 VDC power sources with diode ORing.

When using 32-point modules, you must use two term panels for each module. Each term panel comes with two sets of labels: 1-16 and 17-32. For information on how to apply the labels, see Appendix F, Panel Labels.

Specifications

This table describes general specifications for 9791-610.

Table 148 General Specifications for Term Panel 9791-610

Feature	Description
Panel type	Current input, 4–20 mA
Points	16

This table describes cable and load parameters for 9791-610.

Table 149 Cable and Load Parameters for Term Panel 9791-610

Feature	IEC Symbol	ISA Symbol	Description for Zone 2 Group IIB
Operating temperature range	T_{amb}	T_{amb}	32° F to 140° F (0° C to 60° C)
Working voltage	U_w	U_w	19 to 32 V
Maximum voltage	U_m	U_m	32 V
Input Connection (F-) Specifications			
Maximum input voltage	U_i	V_{max}	9 V
Maximum input current	I_i	I_{max}	0.036 A
Maximum input power	P_i	P_i	0.324 W
C internal, maximum	C_i	C_i	0.088 µF
L internal, maximum	L_i	L_i	43 µH
Output Connection (F+) Specifications			
Maximum output voltage	U_o	V_{oc}	32 V
Maximum output current	I_o	I_{sc}	0.169 A
Maximum output power	P_o	P_o	1.347 W
C external, maximum	C_o	C_a	1.18 µF
L external, maximum	L_o	L_a	4.95 mH

Compatible Modules

This table describes analog input modules compatible with 9791-610.

Table 150 Modules Compatible with 9791-610

Module Part Number	Points per Module	Module Description
2770H	32	HART analog input interface
3700A	32	0–5 VDC, non-commoned, differential, DC-coupled, TMR, +6% input over-range measurement
3703E	16	0–5 VDC or 0–10 VDC (Use TriStation to configure input range), non-commoned, differential, isolated, TMR
3721	32	0 to 5 VDC or –5 to +5 VDC (Use TriStation to configure input range), differential, DC-coupled, TMR

CAUTION

When used with the 9791-610, the accuracy of the 3700A, 3703E, and 3721 modules may be affected by up to –0.08% Full-Scale Range (FSR), at maximum temperature. As a result, the accuracy of these modules is +0.15% to –0.23% FSR, at 140° F (60° C).

Field Wiring Diagrams

This figure illustrates how to connect a 3700A, 3703E, or 3721 analog input module or a HART analog input interface module and a 9791-610 to the field (1 of 16 or 32 module points shown). See Appendix E, Shield Ground for shield ground installation guidelines.

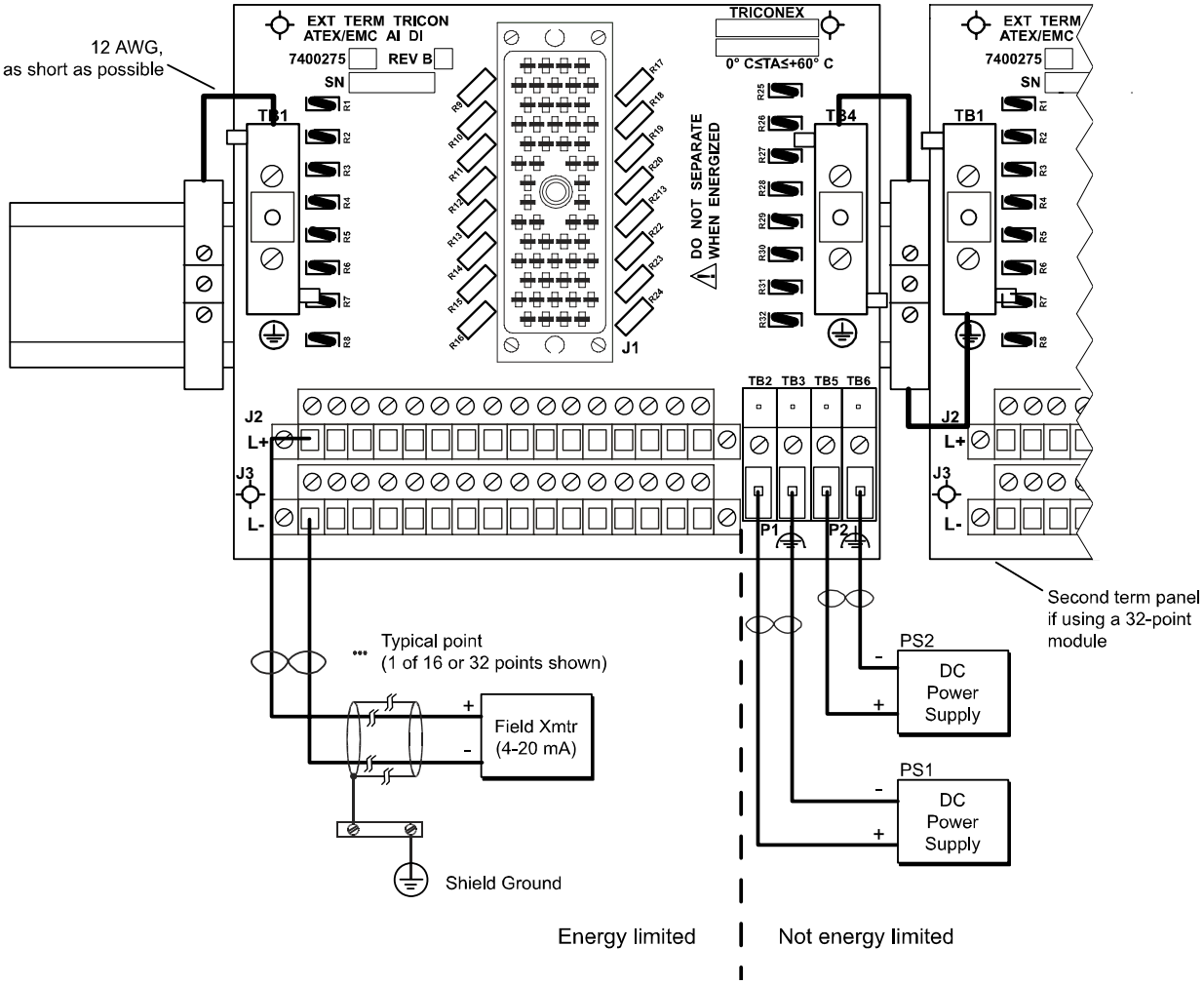

Figure 196 Field Wiring for 9791-610 with a 3700A, 3703E, or 3721 AI Module or 2770H HART AI Interface Module

Note For additional instructions on installing HART Interface Modules, see the *Planning and Installation Guide for Tricon v9–v10 Systems*.

Simplified Schematics

This is a simplified schematic of a typical 32-point non-commoned analog input module with a current input panel (1 of 32 module points shown).

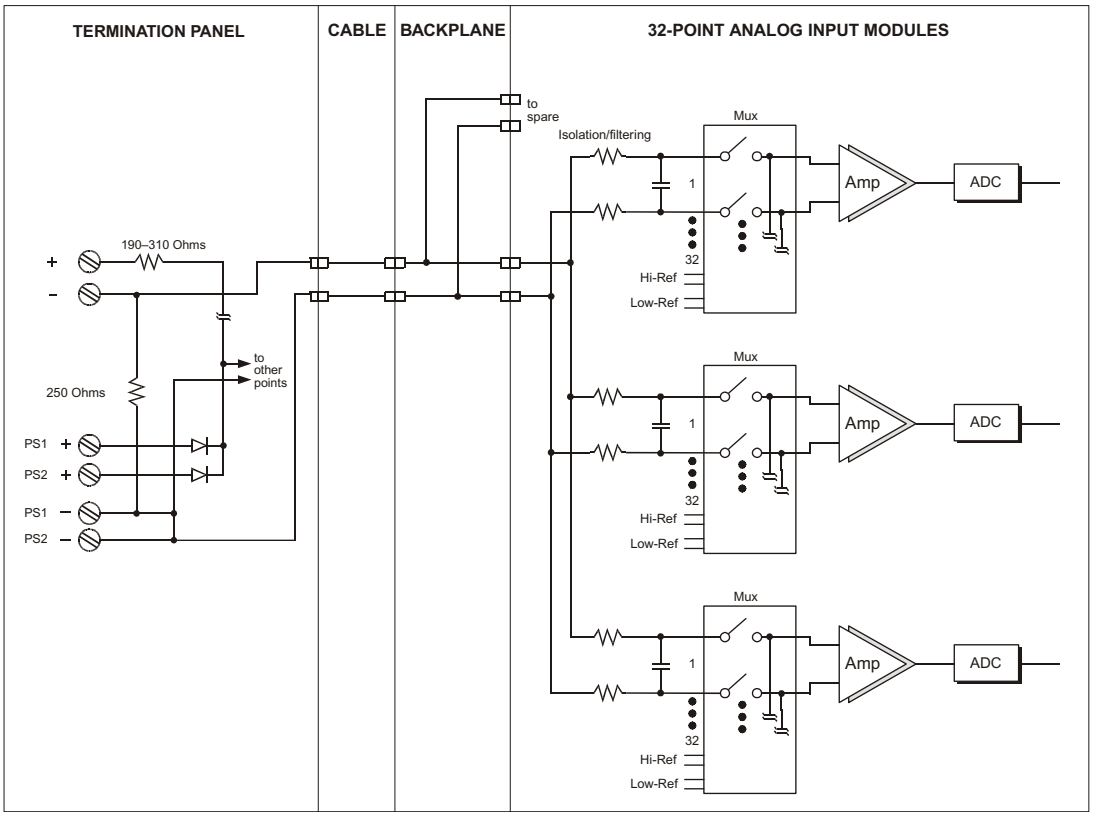

Figure 197 Simplified Schematic of a 3700A or 3721 Analog Input Module with a 9791-610 Panel

This is a simplified schematic of a Model 2770H HART Analog Input Interface Module with a current input panel (1 of 32 module points shown).

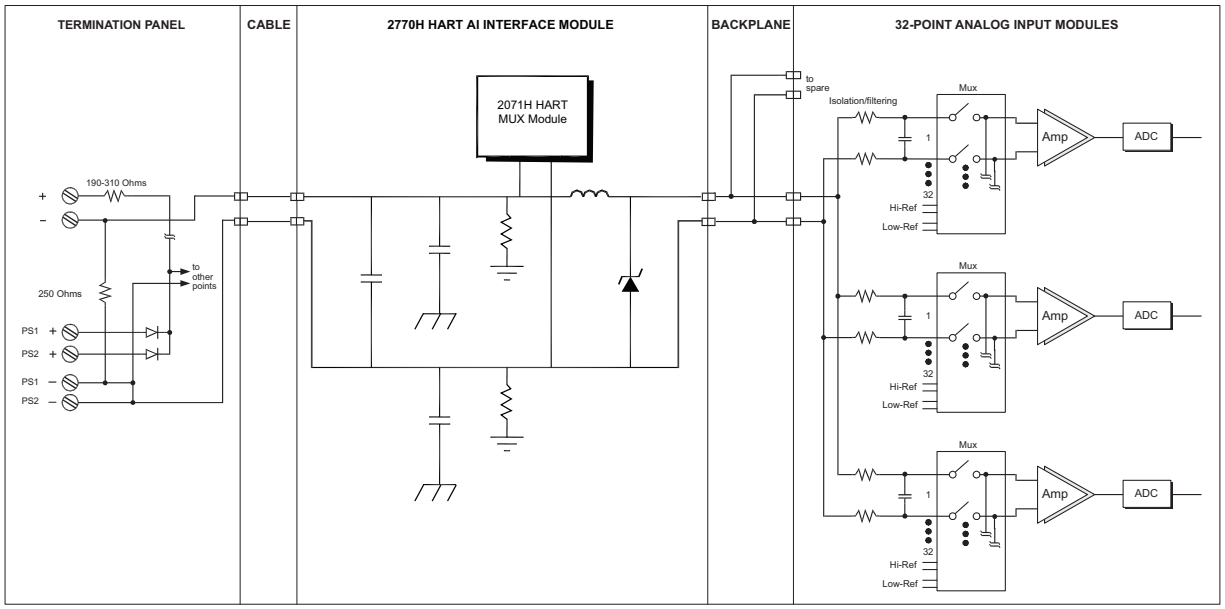

Figure 198 Simplified Schematic of a 2770H HART AI Interface Module with a 3700A or 3721 Analog Input Module and a 9791-610 Panel

This is a simplified schematic of a typical 32-point non-commoned analog input module with a current input panel (1 of 32 module points shown).

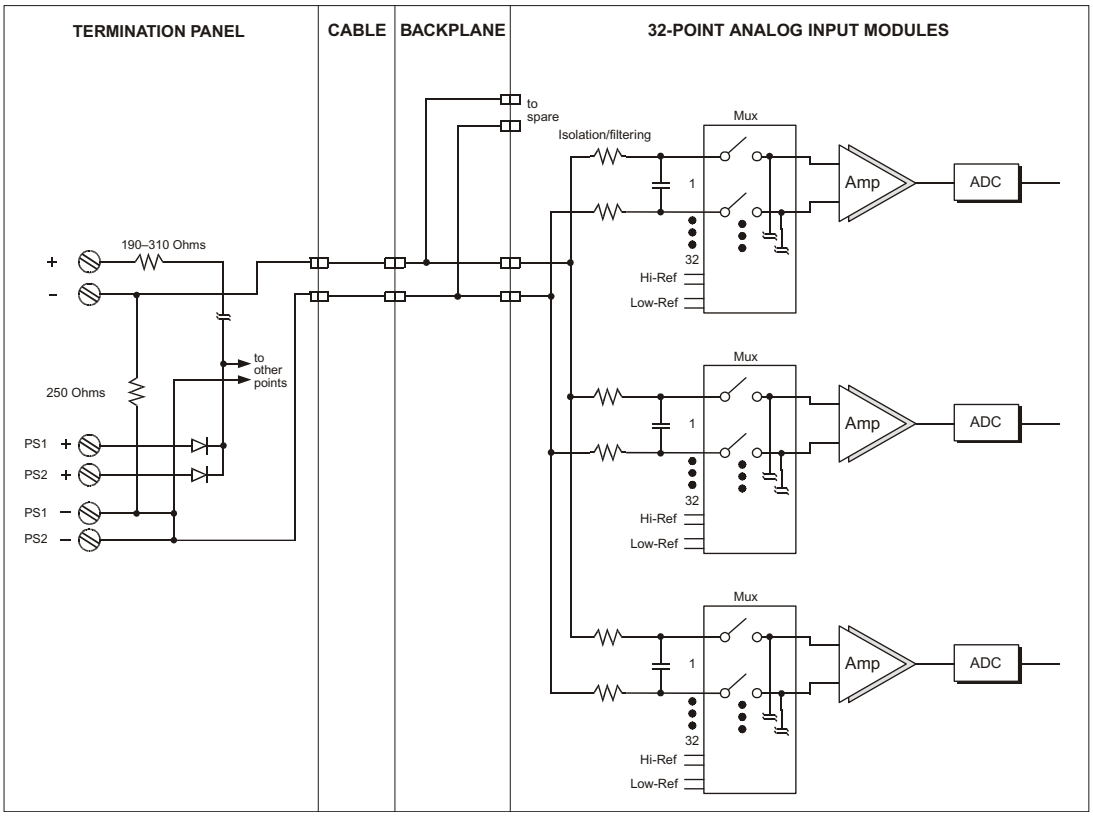

Figure 199 Simplified Schematic of a 3700A or 3721 Analog Input Module with a 9791-610 Panel

9787-110 (0-5 VDC voltage input, 16 pts.)

Termination panel 9787-110 is compatible with 0 to 5 VDC analog input modules. Each panel has:

- Two, sixteen-position field terminals; support for 16 points
- Two terminals per point, for differential analog input (I+, I–)
- Two, one-position terminals for protective earth connection

When using 32-point modules, you must use two term panels for each module. Each term panel comes with two sets of labels: 1-16 and 17-32. For information on how to apply the labels, see Appendix F, Panel Labels.

Specifications

This table describes general specifications for 9787-110.

Table 151 General Specifications for Term Panel 9787-110

Feature	Description
Panel type	Voltage input, 0–5 VDC
Points	16

This table describes cable and load parameters for 9787-110.

Table 152 Cable and Load Parameters for Term Panel 9787-110

Feature	IEC Symbol	ISA Symbol	Description for Zone 2 Group IIB
Operating temperature range	T_{amb}	T_{amb}	32° F to 140° F (0° C to 60° C)
Working voltage	U_w	U_w	19 to 32 V
Maximum voltage	U_m	U_m	32 V
Input Connection (I+ and I-) Specifications when Used with 3700A			
Maximum input voltage	U_i	V_{max}	32 V
Maximum input current	I_i	I_{max}	0.00 A
Maximum input power	P_i	P_i	0.00 W
C internal, maximum	C_i	C_i	0.038 µF
L internal, maximum	L_i	L_i	0.043 µH
Output Connection (I+ and I-) Specifications when Used with 3703E			
Maximum output voltage	U_o	V_{oc}	15 V
Maximum output current	I_o	I_{sc}	0.005 A
Maximum output power	P_o	P_o	0.075 W
C external, maximum	C_o	C_a	20.14 µF
L external, maximum	L_o	L_a	1 H

Compatible Modules

This table describes analog input modules compatible with 9787-110.

Table 153 Modules Compatible with 9787-110

Module Part Number	Points per Module	Module Description
3700A	32	0–5 VDC, non-commoned, differential, DC-coupled, TMR, +6% input over-range measurement
3703E	16	0–5 VDC or 0–10 VDC (Use TriStation to configure input range), non-commoned, differential, isolated, TMR
3721	32	0 to 5 VDC or –5 to +5 VDC (Use TriStation to configure input range), differential, DC-coupled, TMR

Field Wiring Diagrams

This figure illustrates how to connect a 3700A, 3703E, or 3721 analog input module and a 9787-110 to the field (1 of 16 or 32 module points shown). See Appendix E, Shield Ground for shield ground installation guidelines.

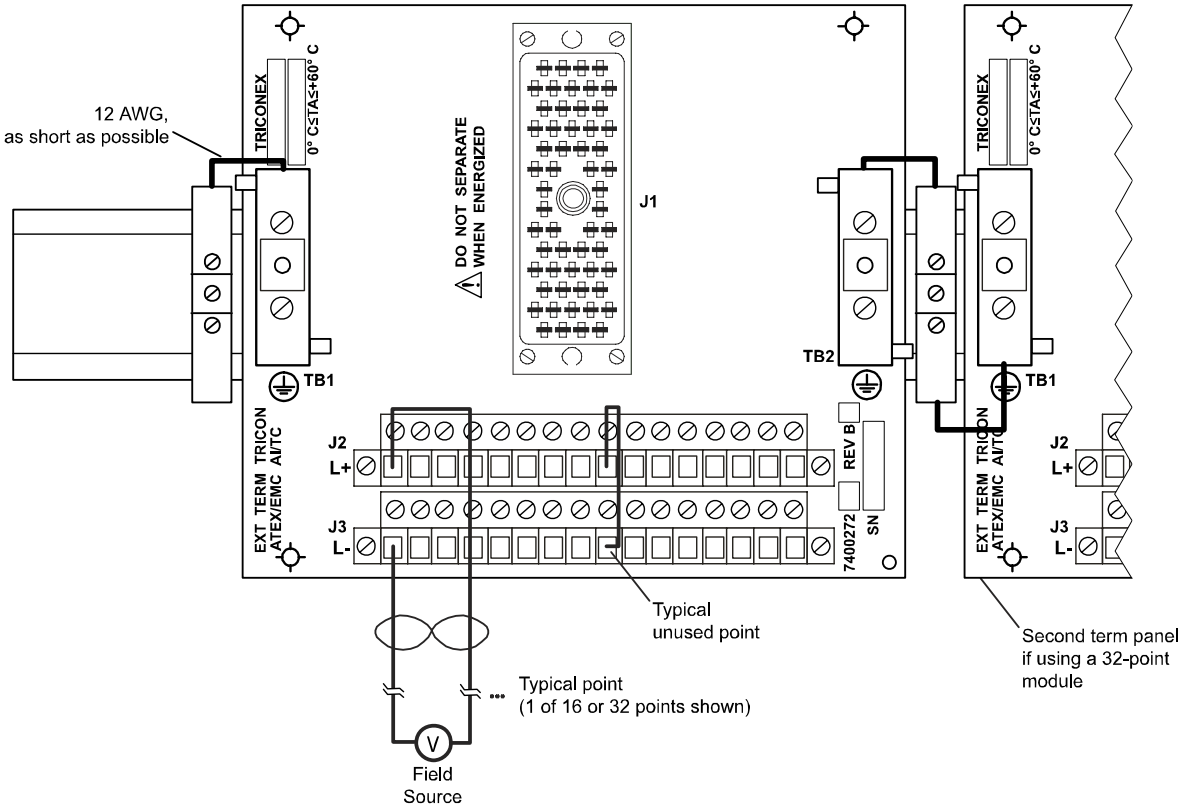

Figure 200 Field Wiring for 9787-110 with a 3700A, 3703E, or 3721 AI Module

CAUTION Unused points must be shorted together.

Simplified Schematics

This is a simplified schematic of a typical 32-point non-commoned analog input module with a voltage input panel (1 of 32 module points shown).

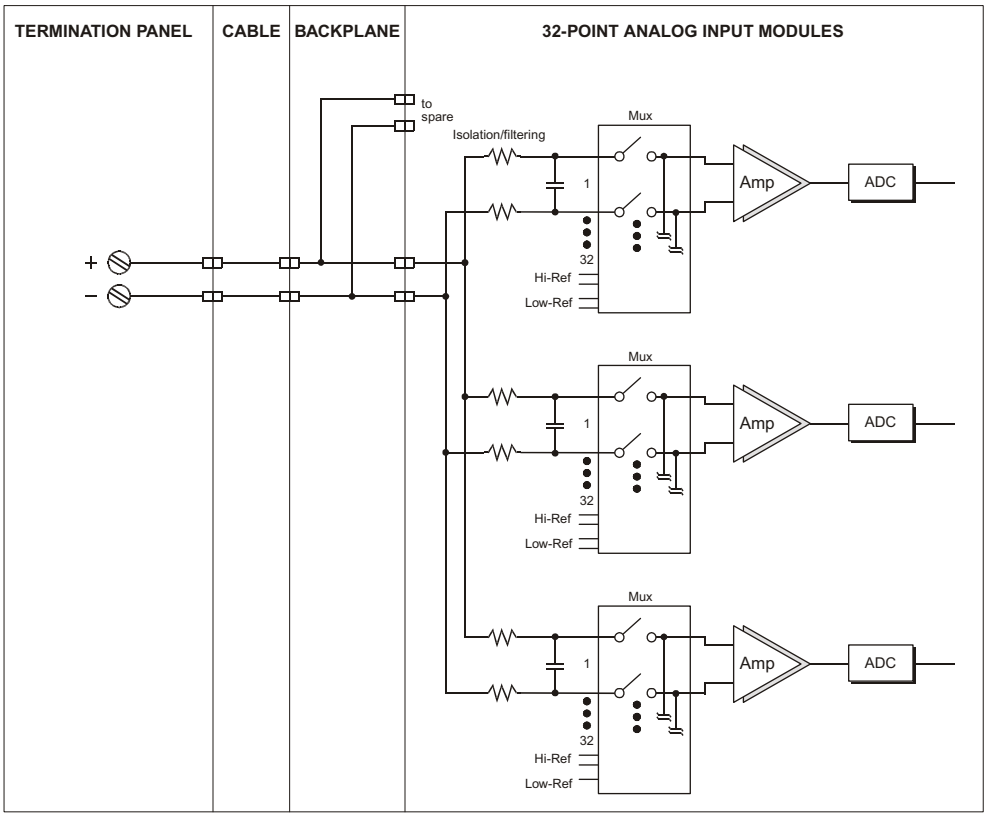

Figure 201 Simplified Schematic of a 3700A or 3721 Analog Input Module with a 9787-110 Panel

This is a simplified schematic of a typical 16-point commoned analog input module with a voltage input panel (1 of 16 module points shown).

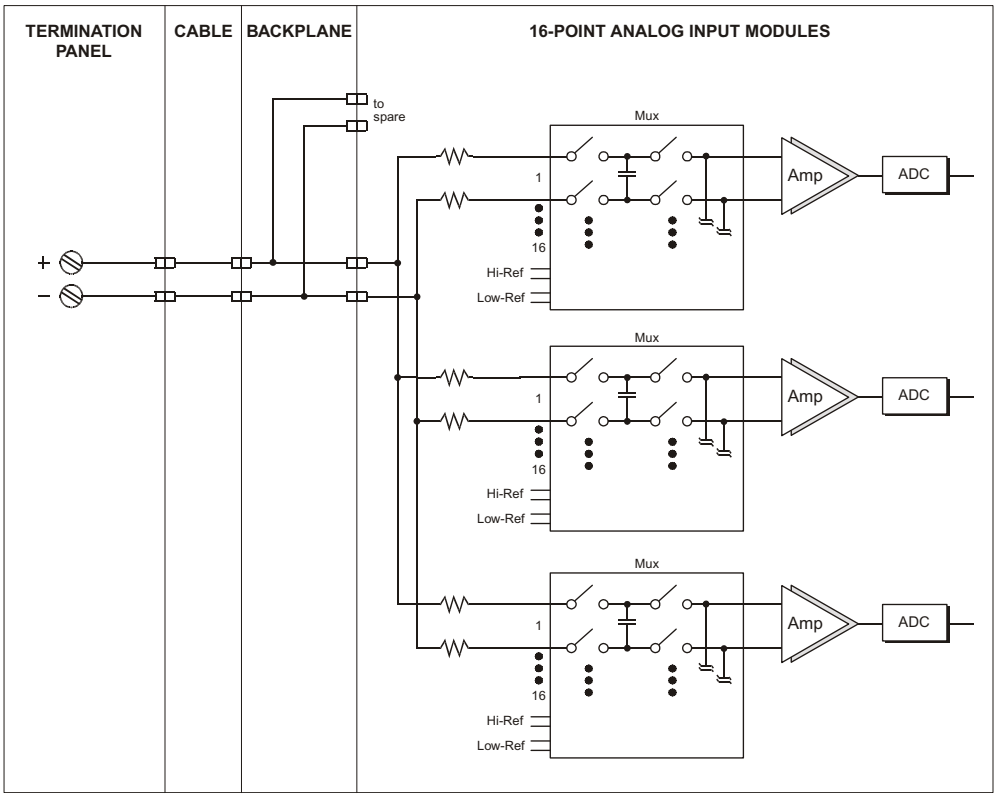

Figure 202 Simplified Schematic of a 3703E Analog Input Module with a 9787-110 Panel

9785-610 (TC input, downscale, 16 pts.)

Termination panel 9785-610 is compatible with non-isolated thermocouple input modules. Each panel has:

- Two, sixteen-position field terminals; support for 16 points
- Two terminals per point, for differential analog input (I+, I–)
- Two, one-position terminals for protective earth connection
- TMR cold-junction temperature sensors
- Downscale open-input bias circuitry

The modules compatible with 9785–610 have 32 points, which means you must use two term panels for each thermocouple input module. Each term panel comes with two sets of labels: 1-16 and 17-32. For information on how to apply the labels, see Appendix F, Panel Labels.

Specifications

This table describes general specifications for 9785-610.

Table 154 General Specifications for Term Panel 9785-610

Feature	Description
Panel type	Thermocouple input, downscale
Points	16

This table describes cable and load parameters for 9785-610.

Table 155 Cable and Load Parameters for Term Panel 9785-610

Feature	IEC Symbol	ISA Symbol	Description for Zone 2 Group IIB
Operating temperature range	T_{amb}	T_{amb}	32° F to 140° F (0° C to 60° C)
Output Connection (I+ and I-) Specifications			
Maximum output voltage	U_O	V_{max}	1.5 V
Maximum output current	I_o	I_{max}	0.00005 A
Maximum output power	P_o	P_i	0.000075 W
C external, maximum	C_o	C_a	1000 µF
L external, maximum	L_o	L_a	1 H

Compatible Modules

This table describes the thermocouple input module compatible with 9785-610.

Table 156 Module Compatible with 9785-610

Module Part Number	Points per Module	Module Description
3706A	32	Type J, K, and T, differential, non-isolated, DC-coupled, TMR, upscale open-input detection. (Use TriStation to configure the thermocouple type.)

Field Wiring Diagrams

This figure illustrates how to connect a 3706A thermocouple input module and a 9785-610 to the field (1 of 32 module points shown). See Appendix E, Shield Ground for shield ground installation guidelines.

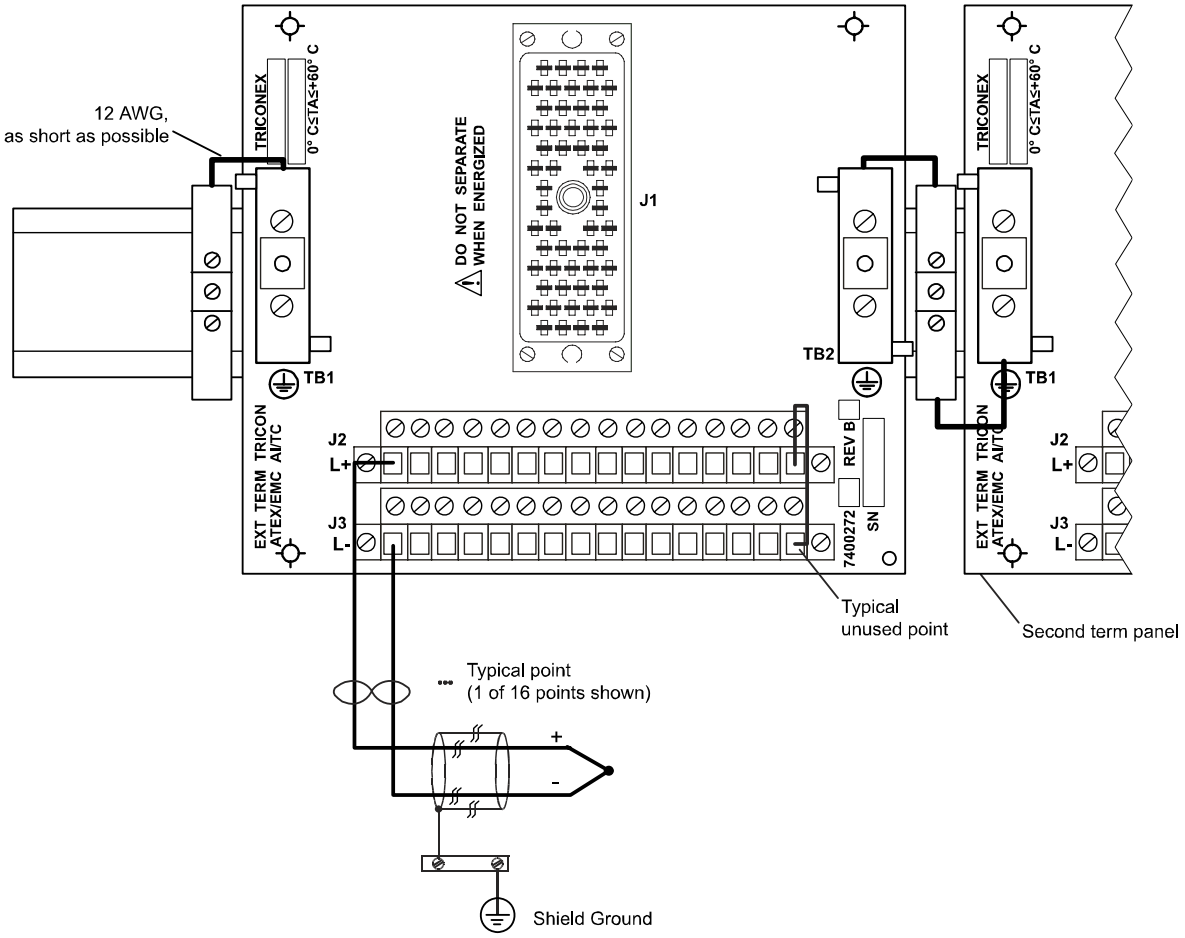

Figure 203 Field Wiring for 9785-610 with a 3706A Thermocouple Input Module

CAUTION Unused points must be shorted together.

Simplified Schematics

This is a simplified schematic of a typical 32-point thermocouple input module with a thermocouple input panel (1 of 32 module points shown).

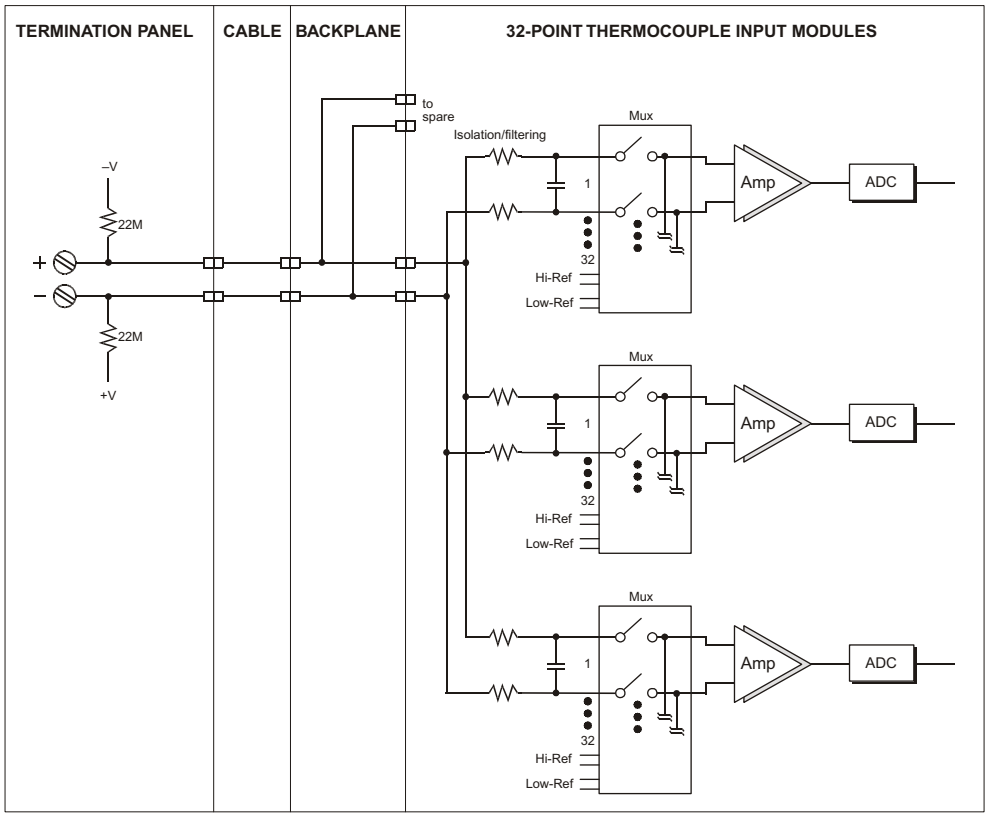

Figure 204 Simplified Schematic of a 3706A Thermocouple Input Module with a 9785-610 Panel

9784-610 (TC input, upscale, 16 pts.)

Termination panel 9784-610 is compatible with non-isolated thermocouple input modules. Each panel has:

- Two, sixteen-position field terminals; support for 16 points
- Two terminals per point, for differential analog input (I+, I–)
- Two, one-position terminals for protective earth connection
- TMR cold-junction temperature sensors
- Upscale open-input bias circuitry

The modules compatible with 9784–610 have 32 points, which means you must use two term panels for each thermocouple input module. Each term panel comes with two sets of labels: 1-16 and 17-32. For information on how to apply the labels, see Appendix F, Panel Labels.

Specifications

This table describes general specifications for 9784-610.

Table 157 General Specifications for Term Panel 9784-610

Feature	Description
Panel type	Thermocouple input, upscale
Points	16

This table describes cable and load parameters for 9784-610.

Table 158 Cable and Load Parameters for Term Panel 9784-610

Feature	IEC Symbol	ISA Symbol	Description for Zone 2 Group IIB
Operating temperature range	T_{amb}	T_{amb}	32° F to 140° F (0° C to 60° C)
Output Connection (I+ and I-) Specifications			
Maximum output voltage	U_o	V_{max}	1.5 V
Maximum output current	I_o	I_{max}	0.00005 A
Maximum output power	P_o	P_i	0.000075 W
C external, maximum	C_o	C_a	1000 µF
L external, maximum	L_o	L_a	1 H

Compatible Modules

This table describes the thermocouple input module compatible with 9784-610.

Table 159 Module Compatible with 9784-610

Module Part Number	Points per Module	Module Description
3706A	32	Type J, K, and T, differential, non-isolated, DC-coupled, TMR, upscale open-input detection. (Use TriStation to configure the thermocouple type.)

Field Wiring Diagrams

This figure illustrates how to connect a 3706A thermocouple input module and a 9784-610 to the field (1 of 32 module points shown). See Appendix E, Shield Ground for shield ground installation guidelines.

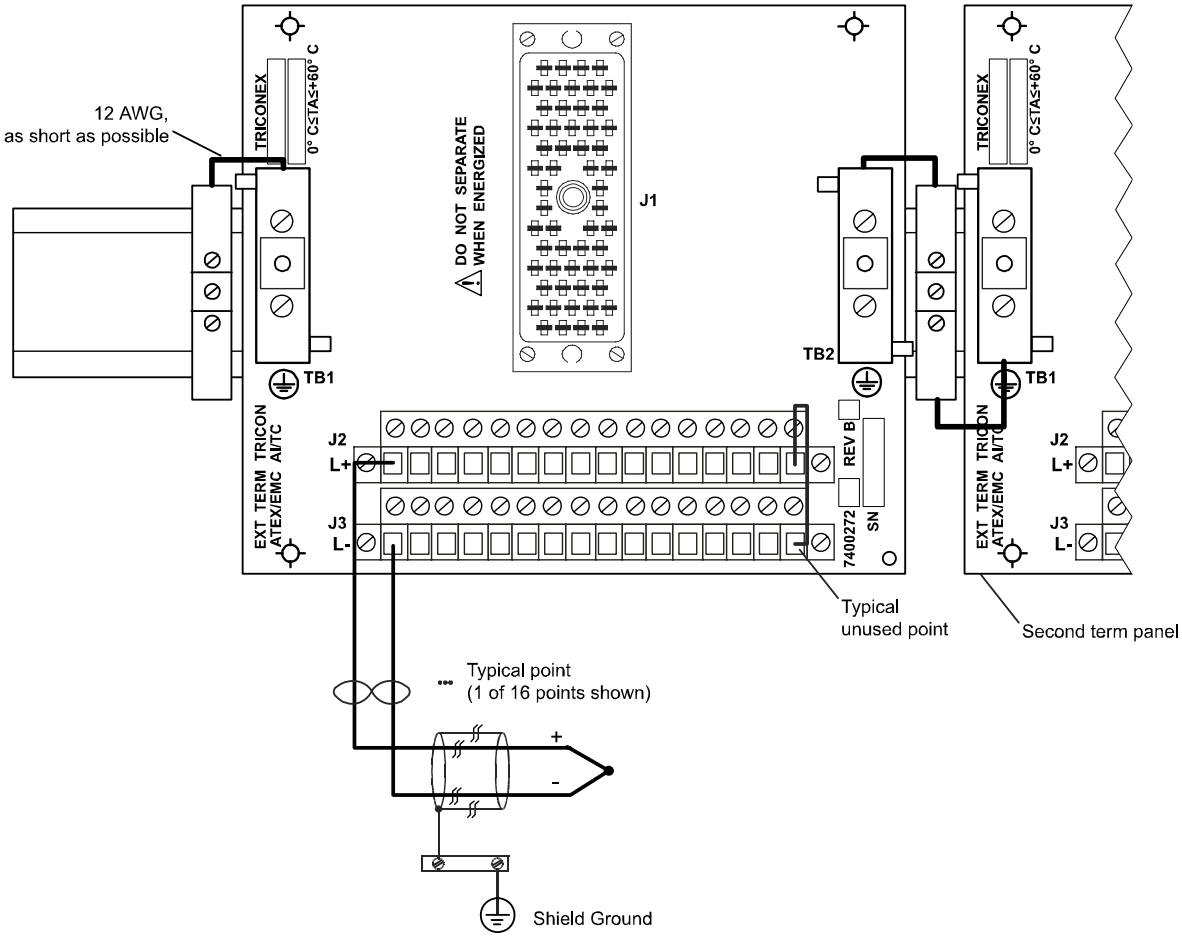

Figure 205 Field Wiring for 9784-610 with a 3706A Thermocouple Input Module

CAUTION Unused points must be shorted together.

Simplified Schematics

This is a simplified schematic of a typical 32-point thermocouple input module with a thermocouple input panel (1 of 32 module points shown).

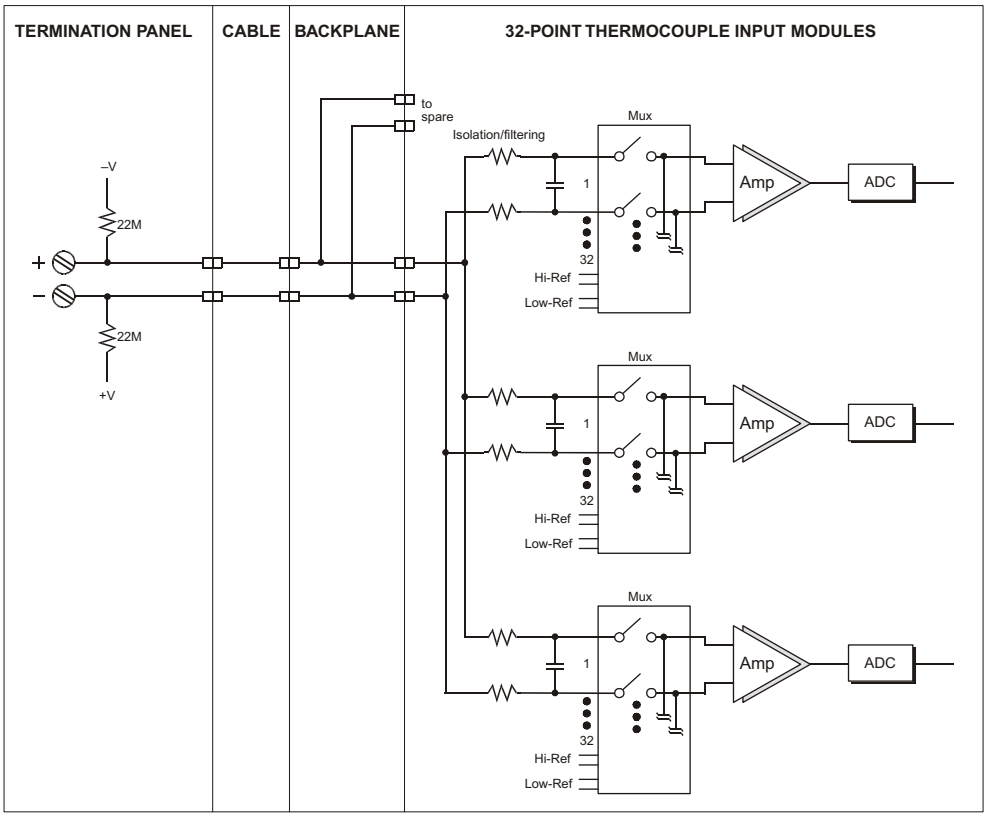

Figure 206 Simplified Schematic of a 3706A Thermocouple Input Module with a 9784-610 Panel

9786-110 (TC input, upscale/downscale, 16 pts.)

Termination panel 9786-110 is compatible with isolated thermocouple input modules. Each panel has:

- Two, sixteen-position field terminals; support for 16 points
- Two terminals per point, for differential analog input (I+, I–)
- Two, one-position terminals for protective earth connection
- TMR cold-junction temperature sensors
- Upscale/downscale open-input bias circuitry

Specifications

This table describes general specifications for 9786-110.

Table 160 General Specifications for Term Panel 9786-110

Feature	Description
Panel type	Thermocouple input, upscale or downscale
Points	16

This table describes cable and load parameters for 9786-110.

Table 161 Cable and Load Parameters for Term Panel 9786-110

Feature	IEC Symbol	ISA Symbol	Description for Zone 2 Group IIB
Operating temperature range	T_{amb}	T_{amb}	32° F to 140° F (0° C to 60° C)
Output Connection (I+ and I-) Specifications			
Maximum output voltage	U_o	V_{max}	15 V
Maximum output current	I_o	I_{max}	0.005 A
Maximum output power	P_o	P_i	0.075 W
C external, maximum	C_o	C_a	20.14 µF
L external, maximum	L_o	L_a	1 H

Compatible Modules

This table describes the analog input module compatible with 9786-110.

Table 162 Module Compatible with 9786-110

Module Part Number	Points per Module	Module Description
3708E	16	Type E, J, K, and T, differential, isolated, DC-coupled, TMR, upscale or downscale open-input detection. (Use TriStation to configure the thermocouple type and specify upscale or downscale open-input detection.)

Field Wiring Diagrams

This figure illustrates how to connect a 3708E thermocouple input module and a 9786-110 to the field (1 of 16 module points shown). See Appendix E, Shield Ground for shield ground installation guidelines.

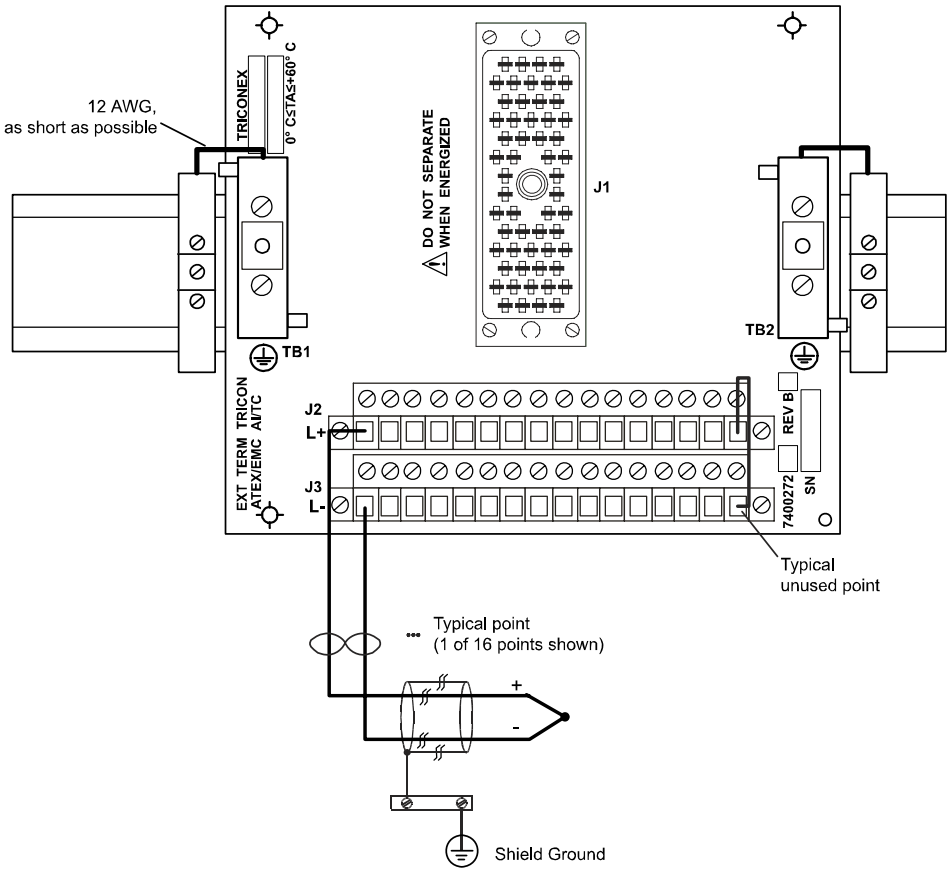

Figure 207 Field Wiring for 9786-110 with a 3708E Thermocouple Input Module

CAUTION Unused points must be shorted together.

Simplified Schematics

This is a simplified schematic of a typical 16-point thermocouple input module with a thermocouple input panel (1 of 16 module points shown).

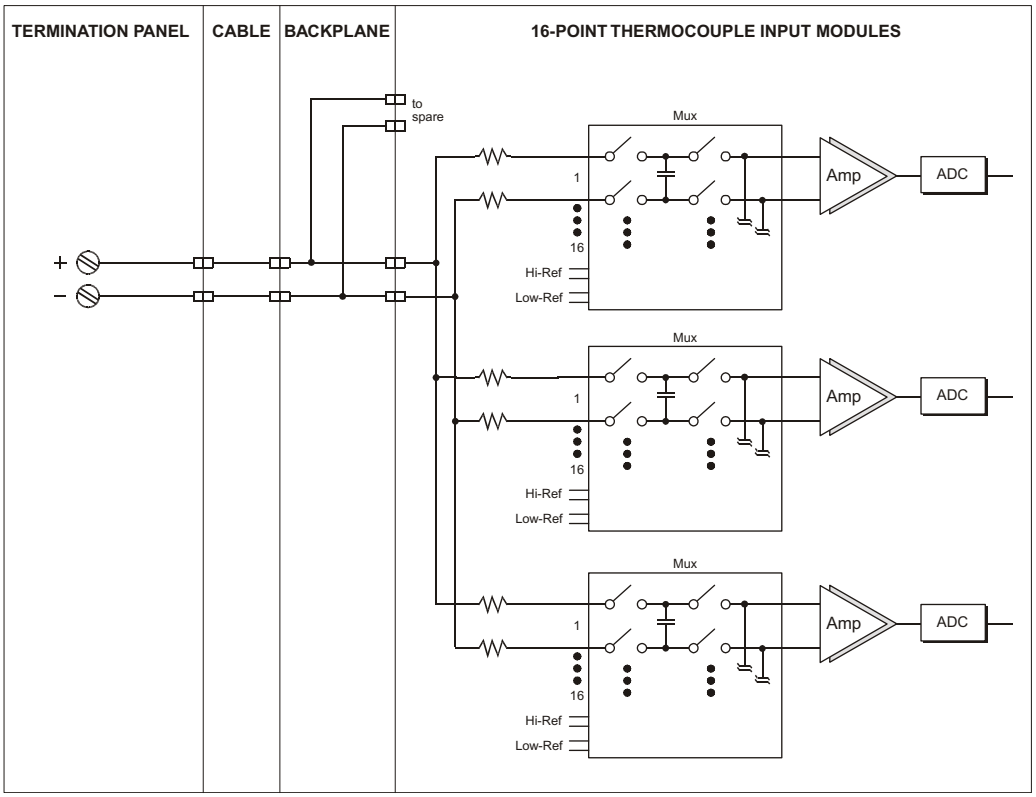

Figure 208 Simplified Schematic of a 3708E Thermocouple Input Module with a 9786-110 Panel

9789-610 (4-20 mA, high-density, 32 pts.)

Termination panel 9789-610 is compatible with the 3704E or 3720 high-density analog input modules. Each panel has:

- Four, sixteen-position field terminals; support for 32 points
- Two terminals per point, for dry contact or 4-20 mA transmitter (+, –)
- Two, one-position terminals for protective earth connection
- A four-position terminal for redundant 24 VDC loop power

Each positive terminal is current-limited with a 190-to-310-ohm series resistor. Each input has a precision 250-ohm resistor for 0-to-5 VDC current-to-voltage conversion.

The panel supports redundant 24 VDC power sources with diode ORing.

The modules compatible with 9789-610 have 64 points, which means you must use two term panels for each module. Each term panel comes with two sets of labels: 1-32 and 33-64. For information on how to apply the labels, see Appendix F, Panel Labels.

Specifications

This table describes general specifications for 9789-610.

Table 163 General Specifications for Term Panel 9789-610

Feature	Description
Panel type	4–20 mA, high-density
Points	32

This table describes cable and load parameters for 9789-610.

Table 164 Cable and Load Parameters for Term Panel 9789-610

Feature	IEC Symbol	ISA Symbol	Description for Zone 2 Group IIB
Operating temperature range	T_{amb}	T_{amb}	32° F to 140° F (0° C to 60° C)
Working voltage	U_w	U_w	≤ 32 V
Maximum voltage	U_m	U_m	32 V
Input Connection (-) Specifications			
Maximum input voltage	U_i	V_{max}	32 V
Maximum input current	I_i	I_{max}	0.036 A
Maximum input power	P_i	P_i	1.152 W
C internal, maximum	C_i	C_i	0.088 µF
L internal, maximum	L_i	L_i	43 µH
Output Connection (+) Specifications			
Maximum output voltage	U_o	V_{oc}	32 V
Maximum output current	I_o	I_{sc}	0.169 A
Maximum output power	P_o	P_o	1.347 W
C external, maximum	C_o	C_a	1.18 µF
L external, maximum	L_o	L_a	4.95 mH

Compatible Modules

This table describes the analog input modules compatible with 9789-610.

Table 165 Modules Compatible with 9789-610

Module Part Number	Points per Module	Module Description
3704E	64	0–5 VDC or 0–10 VDC (Use TriStation to configure for 0–5 VDC or 0–10 VDC), commoned, high-density, DC-coupled, TMR
3720	64	0–5 VDC, single-ended, high-density, TMR

CAUTION

When used with the 9789-610, the accuracy of modules 3704E and 3720 may be affected by up to –0.08% Full-Scale Range (FSR) at maximum temperature. As a result:

- the accuracy of module 3704E is +0.25% to –0.33% FSR at 140° F (60° C).
- the accuracy of module 3720 is +0.15% to –0.23% FSR at 140° F (60° C).

Field Wiring Diagrams

This figure illustrates how to connect a 3704E or 3720 analog input module and a 9789-610 to the field (1 of 64 module points shown). See Appendix E, Shield Ground for shield ground installation guidelines.

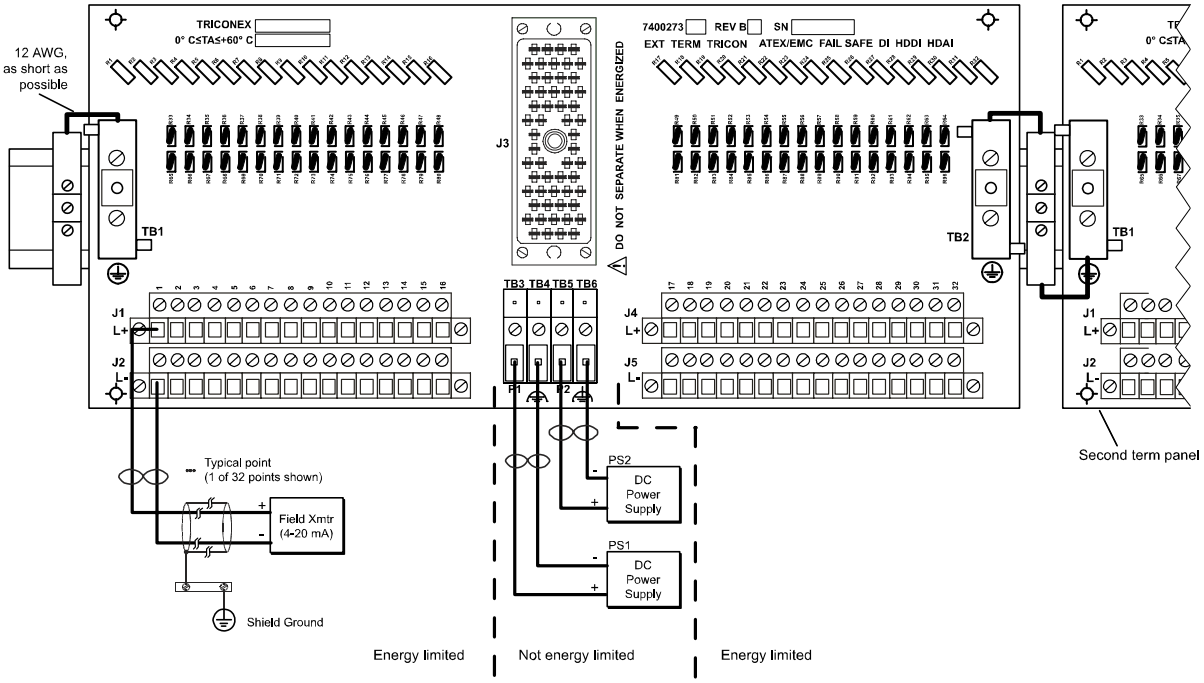

Figure 209 Field Wiring for 9789-610 with a 3704E or 3720 AI Module

Simplified Schematics

This is a simplified schematic of a typical 64-point commoned analog input module with a 4-20 mA, high-density input panel (1 of 64 module points shown).

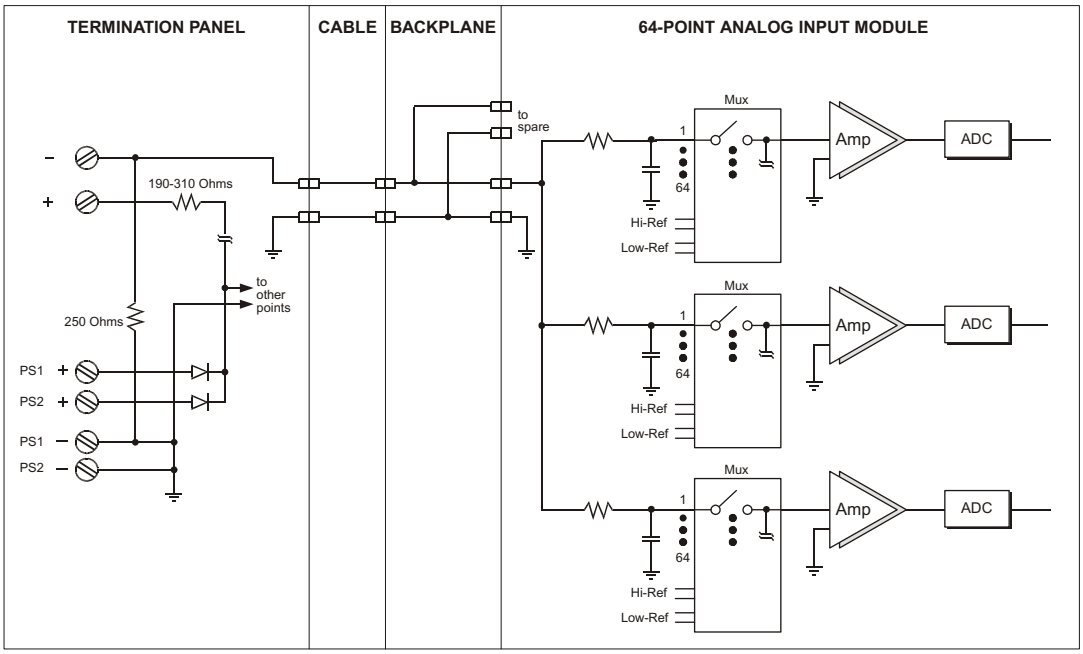

Figure 210 Simplified Schematic of a 3704E or 3720 Analog Input Module with a 9789-610 Panel

Analog Output Term Panels

This section describes analog output termination panels. Model numbers include:

- 9861-610 (3805E/H module, 8 pts.)
- 9871-810 (3807 module, 4 pts.)

9861-610 (3805E/H module, 8 pts.)

Termination panel 9861–610 is compatible with the 3805E and 3805H 4–20 mA output modules and 2870H HART analog output interface modules. Each panel has:

- Two, eight-position field terminals; support for eight points
- Two terminals per point: Out, Rtn (L+, L–)
- A four-position terminal for redundant 24 VDC loop power
- Two, one-position terminals for protective earth connection

Specifications

This table describes specifications for 9861–610.

Table 166 Specifications for Term Panel 9861-610

Feature	Description
Panel type	Current output
Points	8

This table describes cable and load parameters for 9861-610.

Table 167 Cable and Load Parameters for Term Panel 9861-610

Feature	IEC Symbol	ISA Symbol	Description for Zone 2 Group IIB
Operating temperature range	T_{amb}	T_{amb}	32° F to 140° F (0° C to 60° C)
Working voltage	U_w	U_w	30 V
Maximum voltage	U_m	U_m	32 V
Output Connection (L+) Specifications			
Maximum output voltage	U_o	V_{oc}	32 V
Maximum output current	I_o	I_{sc}	0.126 A
Maximum output power	P_o	P_o	0.990 W
C external, maximum	C_o	C_a	1.15 µF
L external, maximum	L_o	L_a	4.95 mH

Compatible Modules

This table describes the analog output module compatible with 9861–610.

Table 168 Module Compatible with 9861-610

Module Part Number	Points per Module	Module Description
2870H	8	HART analog output interface
3805E/H	8	4–20 mA, commoned-return, DC-coupled, TMR

Field Wiring Diagrams

This figure illustrates how to connect a 3805E or 3805H analog output module, or a HART analog output interface module, and a 9861–610 to the field (1 of 8 module points shown).

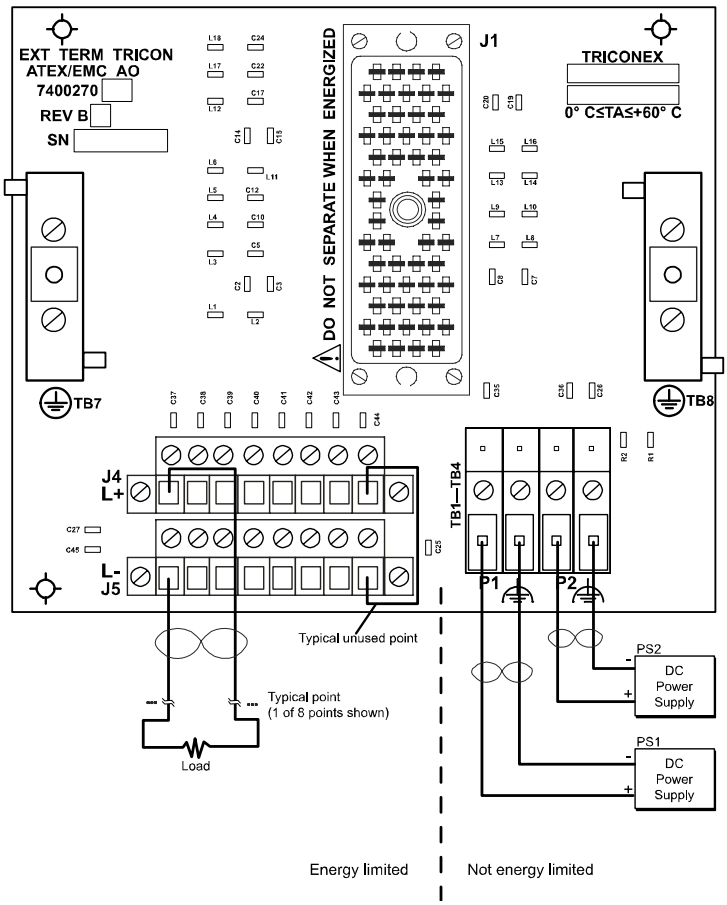

Figure 211 Field Wiring for 9861-610 with a 3805E or 3805H AO Module or a 2870H HART AO Interface Module

CAUTION Unused points must be shorted together.

Note For additional instructions on installing HART Interface Modules, see the *Planning and Installation Guide for Tricon v9–v10 Systems*.

Simplified Schematics

This is a simplified schematic of a typical 8-point commoned-return analog output module with an analog output panel (1 of 8 module points shown).

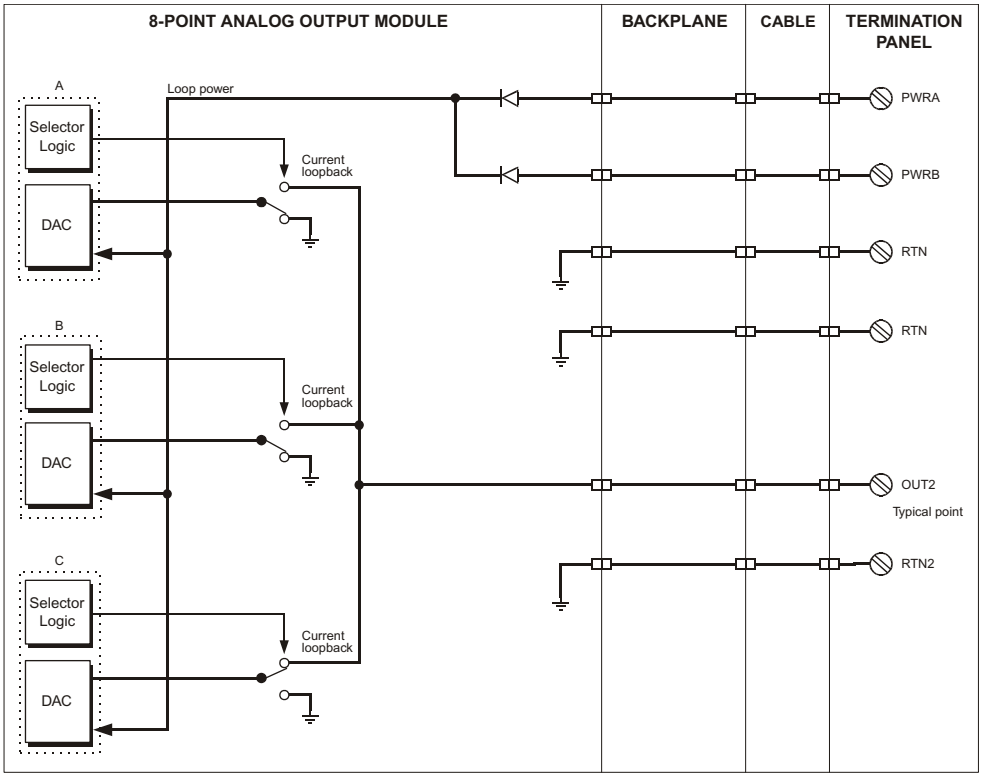

Figure 212 Simplified Schematic of a 3805E or 3805H Analog Output Module with a 9861-610 Panel

This is a simplified schematic of a Model 2870H HART Analog Output Interface Module with an analog output panel (1 of 8 module points shown).

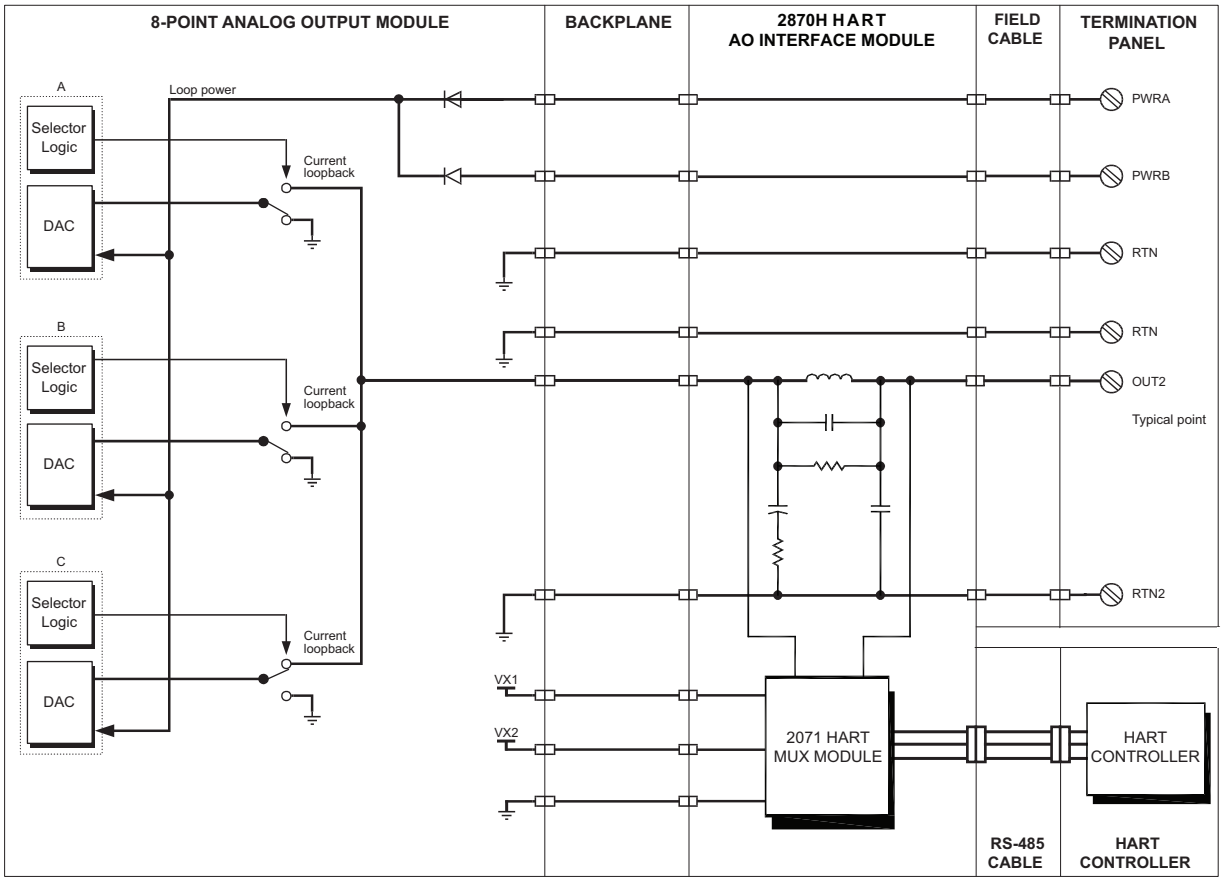

Figure 213 Simplified Schematic of a 2870H HART AO Interface Module with a 3805E or 3805H AO Module and a 9861-610 Panel

9871-810 (3807 module, 4 pts.)

Termination panel 9871–810 is compatible with the 3807 BiPolar Analog Output module. Each panel has:

- Two, eight position field terminals; support for four points and four redundant point connections
- Two terminals per point: Out, Rtn (L+, L–)
- Per point snubbers suitable for inductive loads up to 1.0 henries
- A four-position terminal for redundant 24 VDC loop power
- Two, one-position terminals for protective earth connection

Specifications

This table describes specifications for 9871–810.

Table 169 Specifications for Term Panel 9871-810

Feature	Description
Panel type	Current output
Points	4 with 4 redundant connections

This table describes cable and load parameters for 9871-810.

Table 170 Cable and Load Parameters for Term Panel 9871-810

Feature	IEC Symbol	ISA Symbol	Description for Zone 2 Group IIB
Operating temperature range	T_{amb}	T_{amb}	32° F to 140° F (0° C to 60° C)
Working voltage	U_w	U_w	30 V
Maximum voltage	U_m	U_m	32 V
Output Connection (L+) Specifications			
Maximum output voltage	U_o	V_{oc}	32 V
Maximum output current	I_o	I_{sc}	0.126 mA
Maximum output power	P_o	P_o	0.990 W
C external, maximum	C_o	C_a	1.15 µF
L external, maximum	L_o	L_a	4.95 mH

Compatible Modules

This table describes the analog output module compatible with 9871–810.

Table 171 Module Compatible with 9871-810

Module Part Number	Points per Module	Module Description
3807	4 analog output	-60 to 60 mA analog outputs, commoned-return, DC-coupled, TMR with coil-diagnostic inputs

Field Wiring Diagrams

This figure illustrates how to connect a 3807 BiPolar Analog Output module and a 9871–810 to the field (1 of 4 module points shown).

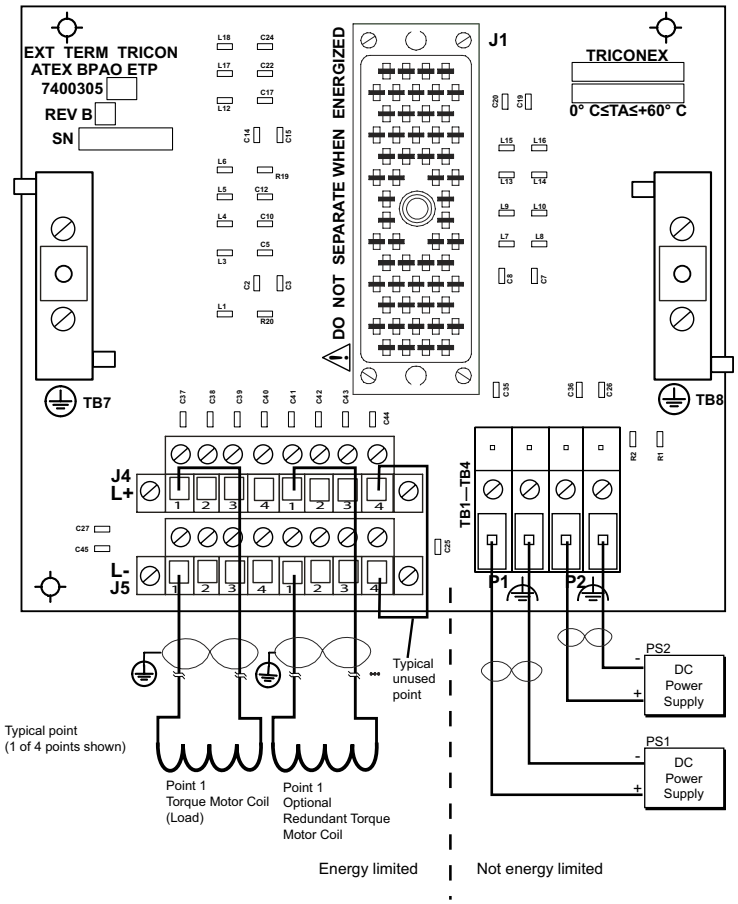

Figure 214 Field Wiring for 9871-810 with a 3807 BiPolar Analog Output Module

CAUTION

- Unused points must be shorted together.
- If the I/O cable (the cable that connects the termination panel to the Tricon backplane) goes outside the cabinet that houses the Tricon chassis, the I/O cable should be routed in a metal conduit.

Simplified Schematics

This is a simplified schematic of a typical 4-point BiPolar Analog Output module with an analog output panel (1 of 4 module points shown with 1.0 Henry snubber 301 Ω, 680 nF). The connection to the coil-diagnostic input is hardwired on the termination panel.

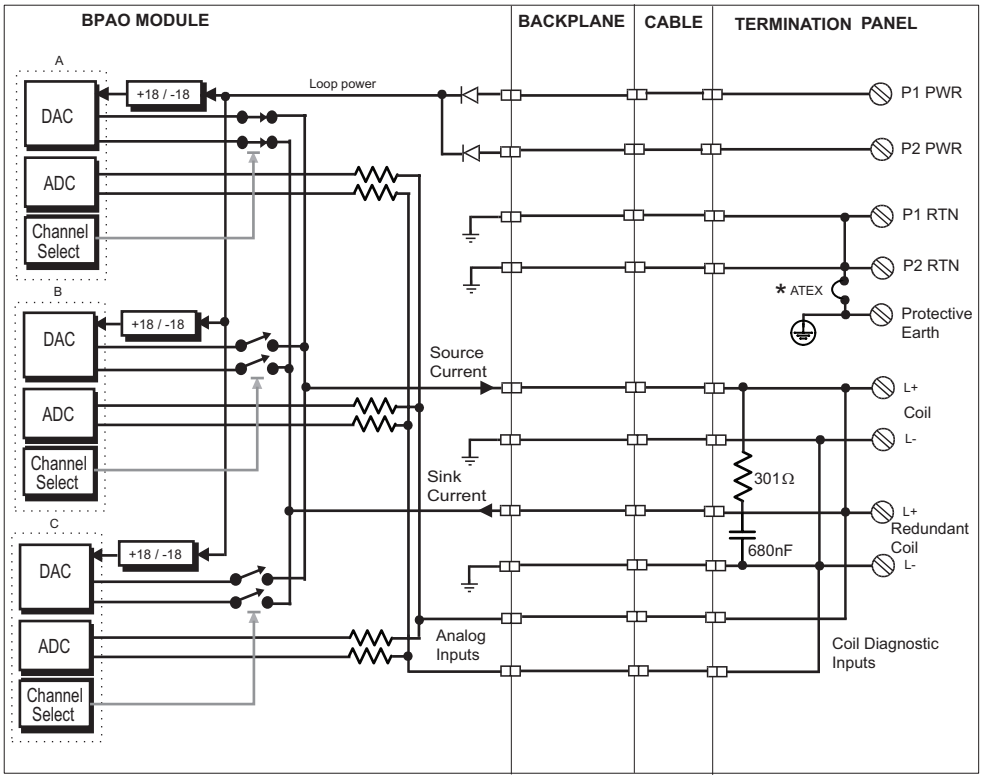

* ATEX-required Field Return to Protective Earth (chassis ground) jumper

Figure 215 Simplified Schematic of a 3807 BiPolar Analog Output Module with a 9871-810 Panel

Digital Input Term Panels

This section describes digital input term panels. Model numbers include:

- 9572-610 (24 VDC, commoned, 16 pts.)
- 9570-610 (24 VDC, high-density, 32 pts.)
- 9571-610 (24 VDC, fail-safe, 32 pts.)

9572-610 (24 VDC, commoned, 16 pts.)

Termination panel 9572-610 is compatible with 24 VDC digital input modules. Each panel has:

- Two, sixteen-position field terminals; support for sixteen points
- Two terminals per point, for dry contact (F+, F–)
- A four-position terminal for redundant 24 VDC loop power
- Two, one-position terminals for protective earth connection

Each positive terminal is current-limited with a 190-to-310-ohm series resistor.

The panel supports redundant 24 VDC power sources with diode ORing.

The modules compatible with 9572-610 have 32 points, which means you must use two term panels for each module. Each term panel comes with two sets of labels: 1-16 and 17-32. For information on how to apply the labels, see Appendix F, Panel Labels.

Specifications

This table describes general specifications for 9572-610.

Table 172 General Specifications for Term Panel 9572-610

Feature	Description
Panel type	Commoned
Points	16

This table describes cable and load parameters for 9572-610.

Table 173 Cable and Load Parameters for Term Panel 9572-610

Feature	IEC Symbol	ISA Symbol	Description for Zone 2 Group IIB
Operating temperature range	T_{amb}	T_{amb}	32° F to 140° F (0° C to 60° C)
Working voltage	U_w	U_w	19 to 32 V
Maximum voltage	U_m	U_m	32 V
Input Connection (F-) Specifications			
Maximum input voltage	U_i	V_{max}	32 V
Maximum input current	I_i	I_{max}	0.0478 A
Maximum input power	P_i	P_i	1.5296 W
C internal, maximum	C_i	C_i	0.088 µF
L internal, maximum	L_i	L_i	43 µH
Output Connection (F+) Specifications			
Maximum output voltage	U_o	V_{oc}	32 V
Maximum output current	I_o	I_{sc}	0.169 A
Maximum output power	P_o	P_o	1.347 W
C external, maximum	C_o	C_a	1.18 µF
L external, maximum	L_o	L_a	4.95 mH

Compatible Modules

This table describes digital input modules compatible with 9572-610.

Table 174 Modules Compatible with 9572-610

Module Part Number	Points per Module	Module Description
3503E	32	24 VAC/VDC, commoned in groups of 8, TMR with self-test
3505E	32	24 VDC, low-threshold, commoned in groups of 8 with self test, TMR
3515	32	0 to 1 kHz pulse totalizer input, non-commoned

Field Wiring Diagrams

This figure illustrates how to connect a 3503E or a 3505E digital input module and a 9572-610 to the field (1 of 32 module points shown).

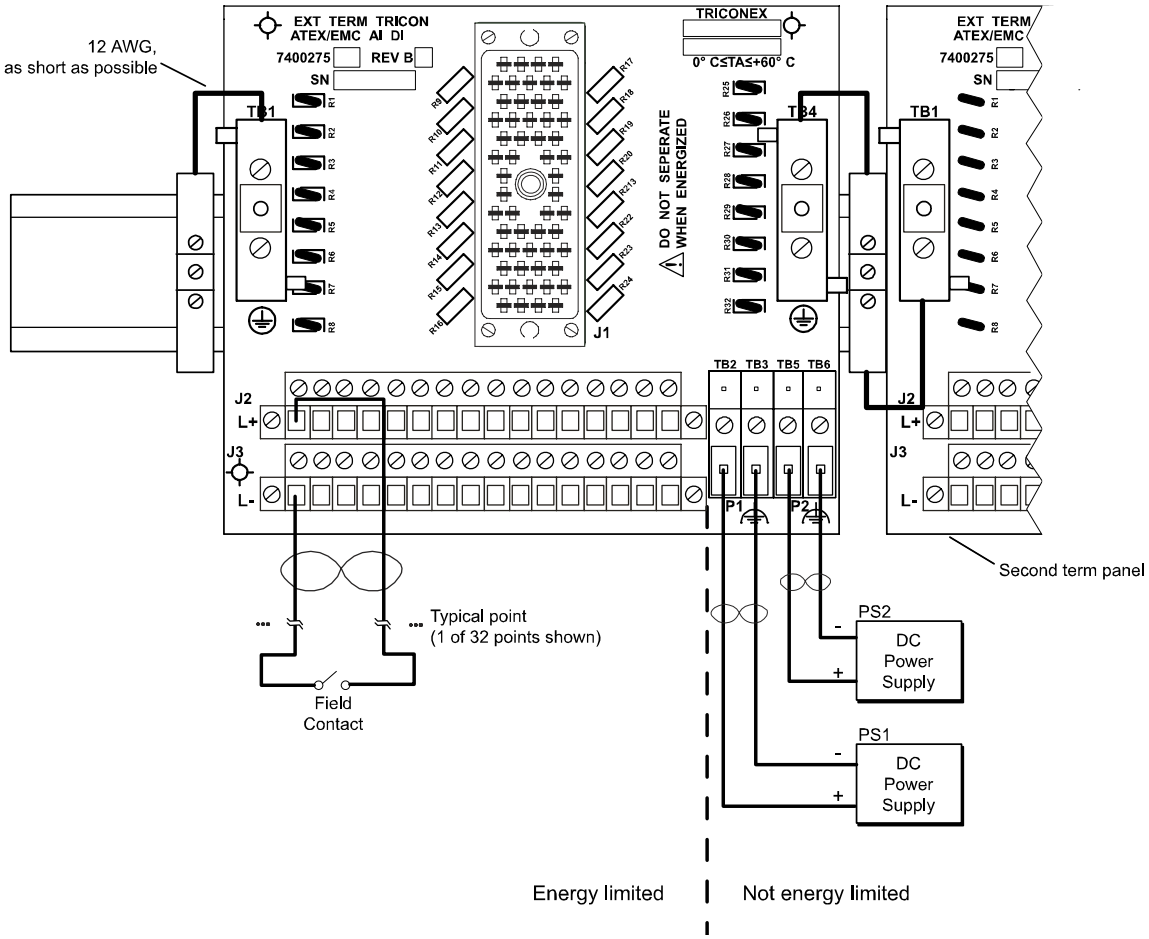

Figure 216 Field Wiring for 9572-610 with a 3503E or 3505E DI Module

This figure illustrates how to connect a 3515 pulse totalizer input module and a 9572-610 to the field (1 of 32 module points shown).

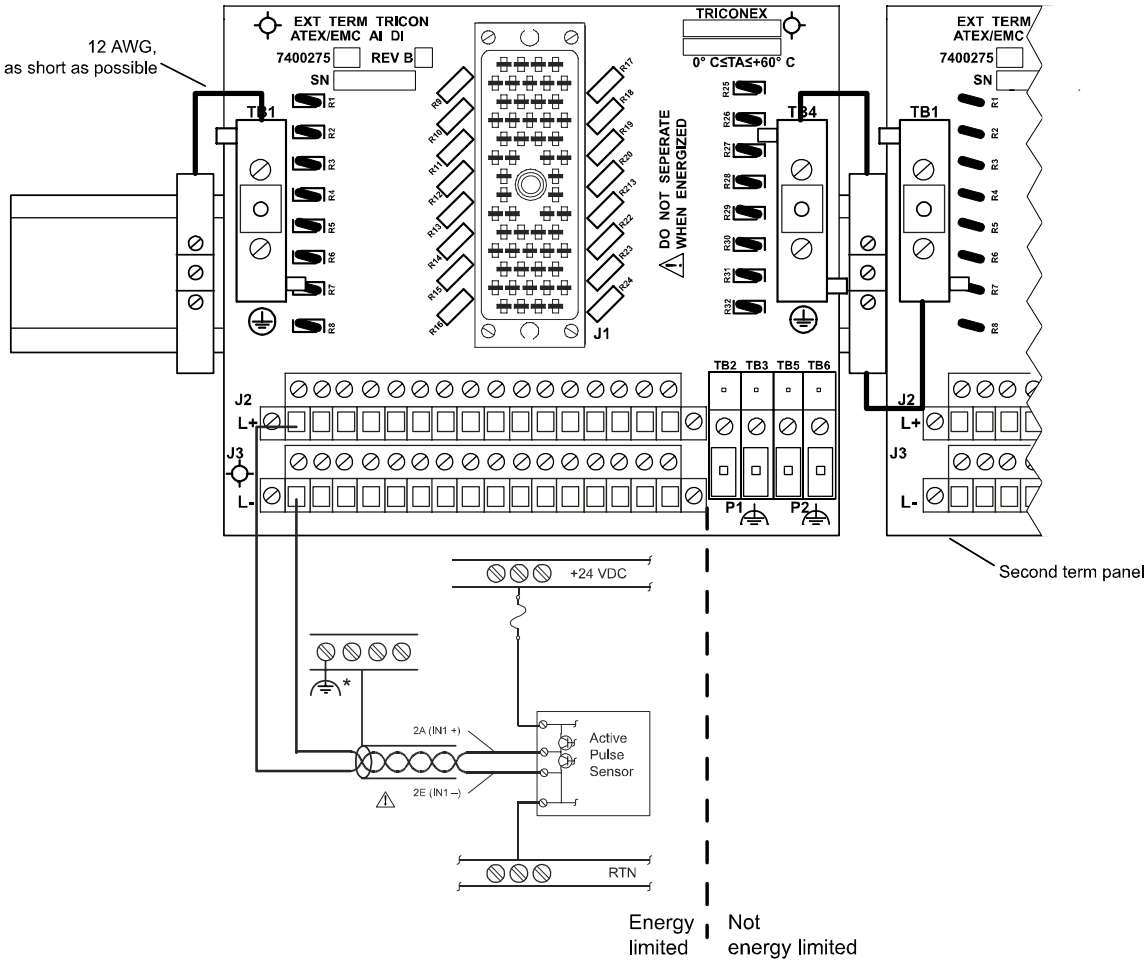

Figure 217 Field Wiring for 9572-610 with a 3515 Pulse Totalizer Input Module

CAUTION

With the 3515 pulse totalizer input module, sensor pulse outputs should be the push-pull type. You may use high-side or low-side, solid-state output, but maximum frequency may be reduced based on cable distance. Do not use mechanical relay/switch contacts. To prevent point-to-point cross-talk, use individually shielded, twisted-pair wire for lengths greater than 50 feet (15 meters).

Simplified Schematics

This is a simplified schematic of a typical 32-point commoned digital input module with a commoned input panel (1 of 32 module points shown).

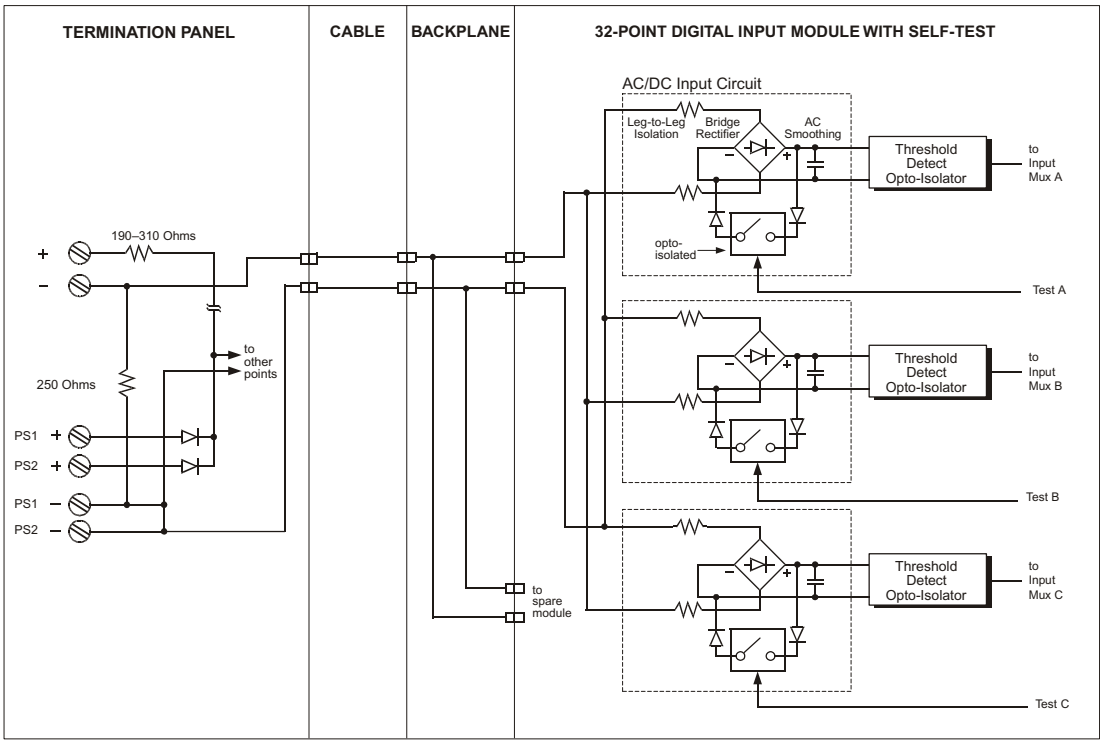

Figure 218 Simplified Schematic of a 3503E or 3505E Digital Input Module with a 9572-610 Panel

This is a simplified schematic of a typical 32-point pulse totalizer input module with a commoned input panel (1 of 32 module points shown).

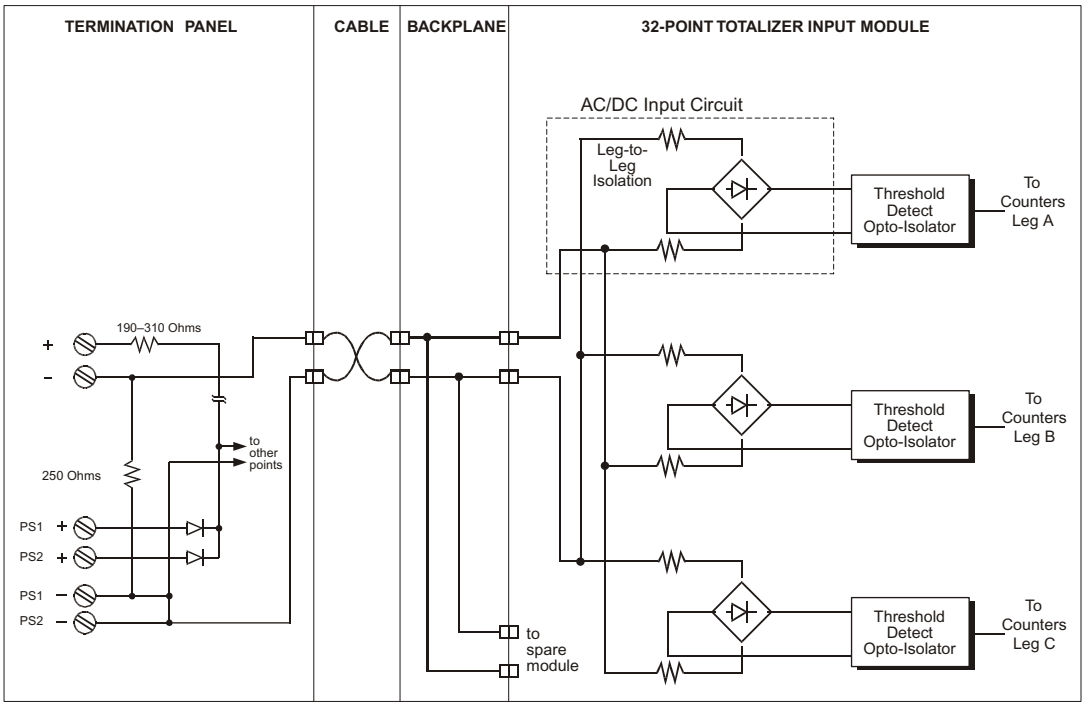

Figure 219 Simplified Schematic of a 3515 Pulse Totalizer Input Module with a 9572-610 Panel

9570-610 (24 VDC, high-density, 32 pts.)

Termination panel 9570-610 is compatible with the 3504E 24 VDC, high-density digital input module. Each panel has:

- Four, sixteen-position field terminals; support for 32 points
- Two terminals per point, for dry contact
- A four-position terminal for redundant 24 VDC loop power
- Two, one-position terminals for protective earth connection

Each positive terminal is current-limited with a 190-to-310-ohm series resistor.

The panel supports redundant 24 VDC power sources with diode ORing.

The modules compatible with 9570-610 have 64 points, which means you must use two term panels for each module. Each term panel comes with two sets of labels: 1-32 and 33-64. For information on how to apply the labels, see Appendix F, Panel Labels.

Specifications

This table describes general specifications for 9570-610.

Table 175 General Specifications for Term Panel 9570-610

Feature	Description
Panel type	Commoned, high-density
Points	32

This table describes cable and load parameters for 9570-610.

Table 176 Cable and Load Parameters for Term Panel 9570-610

Feature	IEC Symbol	ISA Symbol	Description for Zone 2 Group IIB
Operating temperature range	T_{amb}	T_{amb}	32° F to 140° F (0° C to 60° C)
Working voltage	U_w	U_w	18 to 32 V
Maximum voltage	U_m	U_m	32 V
Input Connection (-) Specifications			
Maximum input voltage	U_i	V_{max}	32 V
Maximum input current	I_i	I_{max}	0.0145 A
Maximum input power	P_i	P_i	0.464 W
C internal, maximum	C_i	C_i	0.058 µF
L internal, maximum	L_i	L_i	30.0 µH
Output Connection (+) Specifications			
Maximum output voltage	U_o	V_{oc}	32 V
Maximum output current	I_o	I_{sc}	0.169 A
Maximum output power	P_o	P_o	1.347 W
C external, maximum	C_o	C_a	1.18 µF
L external, maximum	L_o	L_a	4.96 mH

Compatible Modules

This table describes the digital input module compatible with 9570-610.

Table 177 Module Compatible with 9570-610

Module Part Number	Points per Module	Module Description
3504E	64	24 VDC, commoned, high-density, DC-coupled, TMR

Field Wiring Diagrams

This figure illustrates how to connect a 3504E digital input module and a 9570-610 to the field (1 of 64 module points shown).

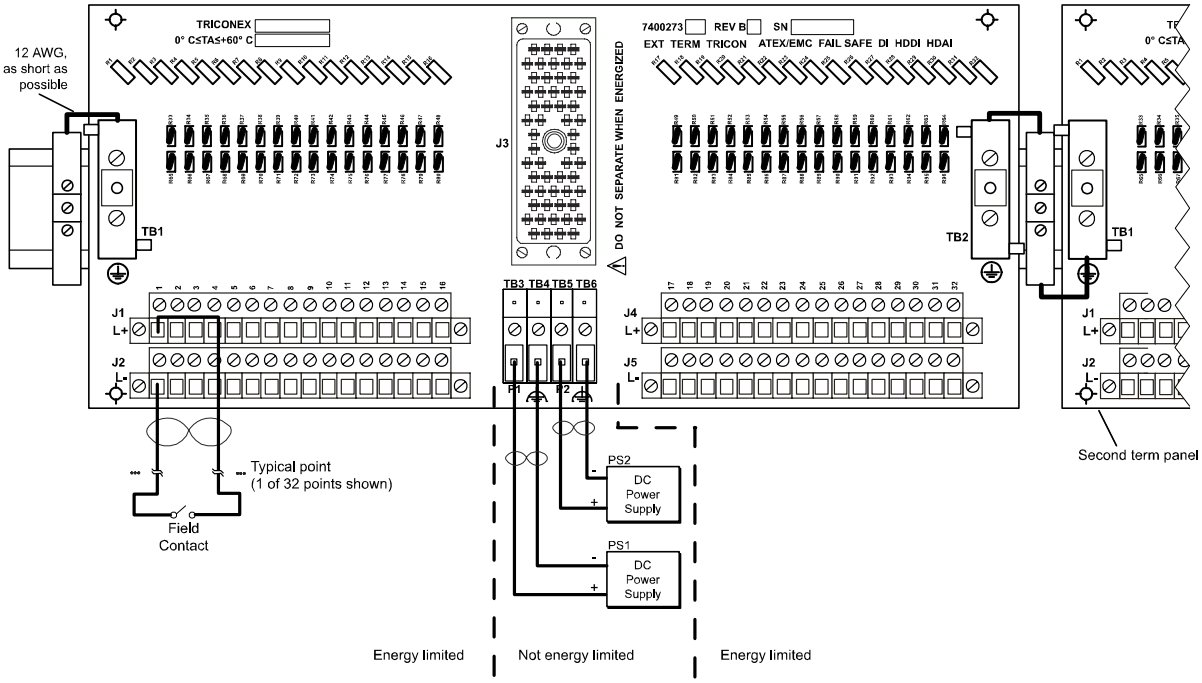

Figure 220 Field Wiring for 9570-610 with a 3504E DI Module

Simplified Schematics

This is a simplified schematic of a typical 64-point commoned digital input module with a commoned input panel (1 of 64 module points shown).

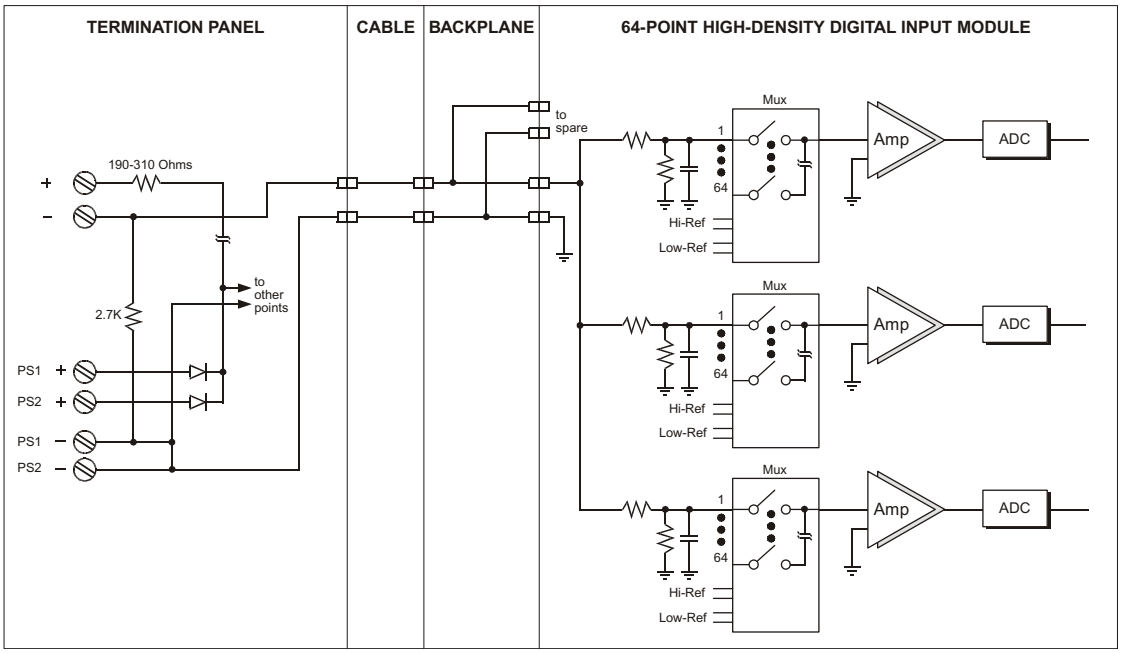

Figure 221 Simplified Schematic of a 3504E Digital Input Module with a 9570-610 Panel

9571-610 (24 VDC, fail-safe, 32 pts.)

Termination panel 9571-610 is compatible with the 3564 24 VDC, fail-safe digital input module. Each panel has:

- Four, sixteen-position field terminals; support for 32 points
- Two terminals per point, for dry contact
- A four-position terminal for redundant 24 VDC loop power
- Two, one-position terminals for protective earth connection

Each positive terminal is current-limited with a 190-to-310-ohm series resistor.

The panel supports redundant 24 VDC power sources with diode ORing.

The modules compatible with 9571-610 have 64 points, which means you must use two term panels for each module. Each term panel comes with two sets of labels: 1-32 and 33-64. For information on how to apply the labels, see Appendix F, Panel Labels.

Specifications

This table describes general specifications for 9571-610.

Table 178 General Specifications for Term Panel 9571-610

Feature	Description
Panel type	Commoned, fail-safe
Points	32

This table describes cable and load parameters for 9571-610.

Table 179 Cable and Load Parameters for Term Panel 9571-610

Feature	IEC Symbol	ISA Symbol	Description for Zone 2 Group IIB
Operating temperature range	T_{amb}	T_{amb}	32° F to 140° F (0° C to 60° C)
Working voltage	U_w	U_w	15 to 32 V
Maximum voltage	U_m	U_m	32 V
Output Connection (+ and -) Specifications			
Maximum output voltage	U_o	V_{oc}	32 V
Maximum output current	I_o	I_{sc}	0.169 A
Maximum output power	P_o	P_o	1.347 W
C external, maximum	C_o	C_a	1.19 µF
L external, maximum	L_o	L_a	4.96 mH

Compatible Modules

This table describes the digital input module compatible with 9571-610.

Table 180 Module Compatible with 9571-610

Module Part Number	Points per Module	Module Description
3564	64	24 VDC, commoned, fail-safe, single

Field Wiring Diagrams

This figure illustrates how to connect a 3564 digital input module and a 9571-610 to the field (1 of 64 module points shown).

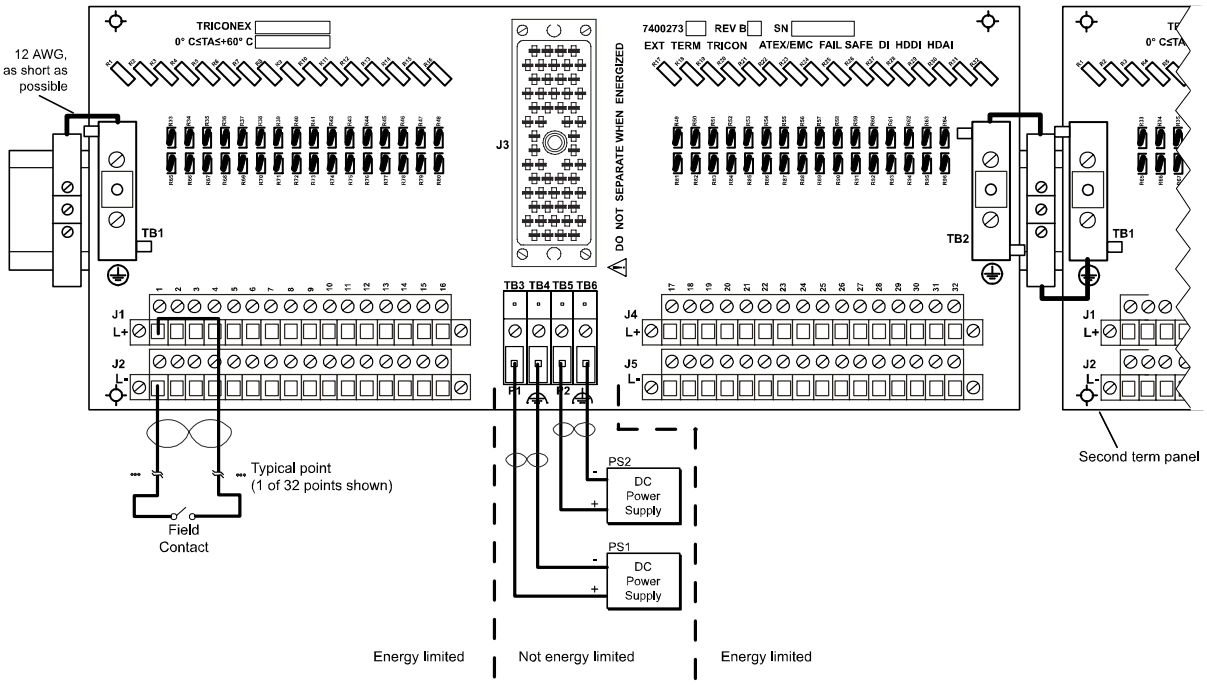

Figure 222 Field Wiring for 9571-610 with a 3564 DI Module

Simplified Schematics

This is a simplified schematic of a typical 64-point, fail-safe, commoned digital input module with a commoned input panel (1 of 64 module points shown).

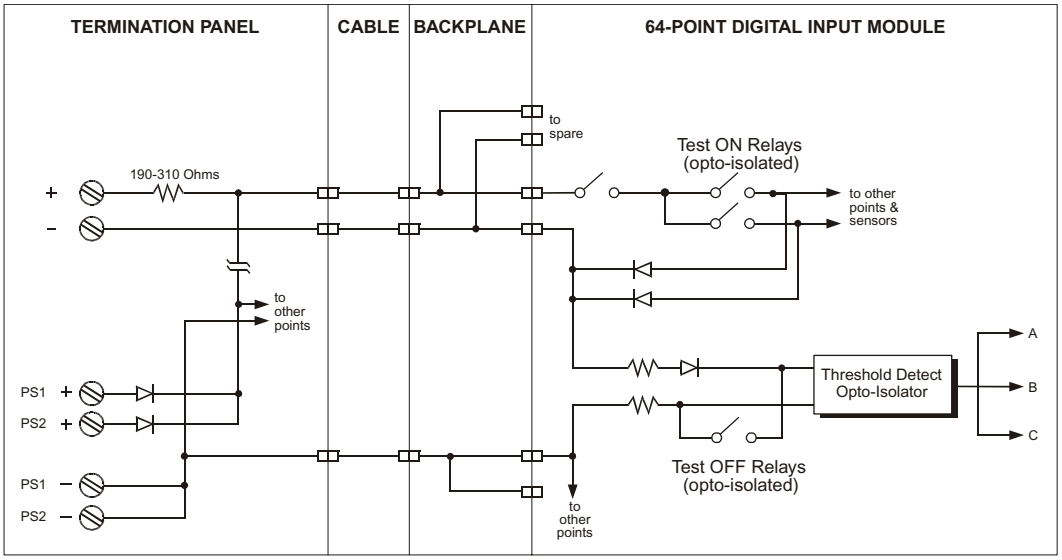

Figure 223 Simplified Schematic of a 3564 Digital Input Module with a 9571-610 Panel

Digital Output Term Panels

This section describes digital output term panel 9671-610 (24 VDC, commoned, supervised, 16 pts.).

9671-610 (24 VDC, commoned, supervised, 16 pts.)

Termination panel 9671-610 is compatible with 24 VDC, commoned, supervised digital output modules. Each panel has:

- Two, sixteen-position field terminals; support for 16 points
- Two terminals per point for field devices: L+, L–
- A four-position terminal for redundant 24 VDC loop power
- Two, one-position terminals for protective earth connection

The panel supports redundant 24 VDC power sources with diode ORing.

When using 32 point modules, you must use two term panels for each digital output module. Each term panel comes with two sets of labels: 1-16 and 17-32. For information on how to apply the labels, see Appendix F, Panel Labels.

Specifications

This table describes general specifications for 9671-610.

Table 181 General Specifications for Term Panel 9671-610

Feature	Description
Panel type	Commoned, supervised
Points	16

This table describes cable and load parameters for 9671-610.

Table 182 Cable and Load Parameters for Term Panel 9671-610

Feature	IEC Symbol	ISA Symbol	Description for Zone 2 Group IIB
Operating temperature range	T_{amb}	T_{amb}	32° F to 140° F (0° C to 60° C)
Working voltage	U_w	U_w	16 to 32 V
Maximum voltage	U_m	U_m	32 V
Output Connection (F+) Specifications			
Maximum output voltage	U_o	V_{oc}	32 V
Maximum output current	I_o	I_{sc}	0.169 A
Maximum output power	P_o	P_o	1.347 W
C external, maximum	C_o	C_a	1.16 µF
L external, maximum	L_o	L_a	4.96 mH

Compatible Modules

This table describes digital output modules compatible with 9671-610.

Table 183 Modules Compatible with 9671-610

Module Part Number	Points per Module	Module Description
3604E	16	24 VDC, non-commoned, opto-isolated, TMR
3624	16	24 VDC, commoned, supervised, opto-isolated, self-protected, TMR
3625	32	24 VDC, commoned, supervised/non-supervised, opto-isolated, self-protected, TMR
3664	32	24 VDC, commoned, opto-isolated, self-protected, dual
3674	32	24 VDC, commoned, opto-isolated, self-protected, dual

Field Wiring Diagrams

This figure illustrates how to connect a 3604E, 3624, or 3625 digital output module and a 9671-610 to the field (16 of 16 points shown).

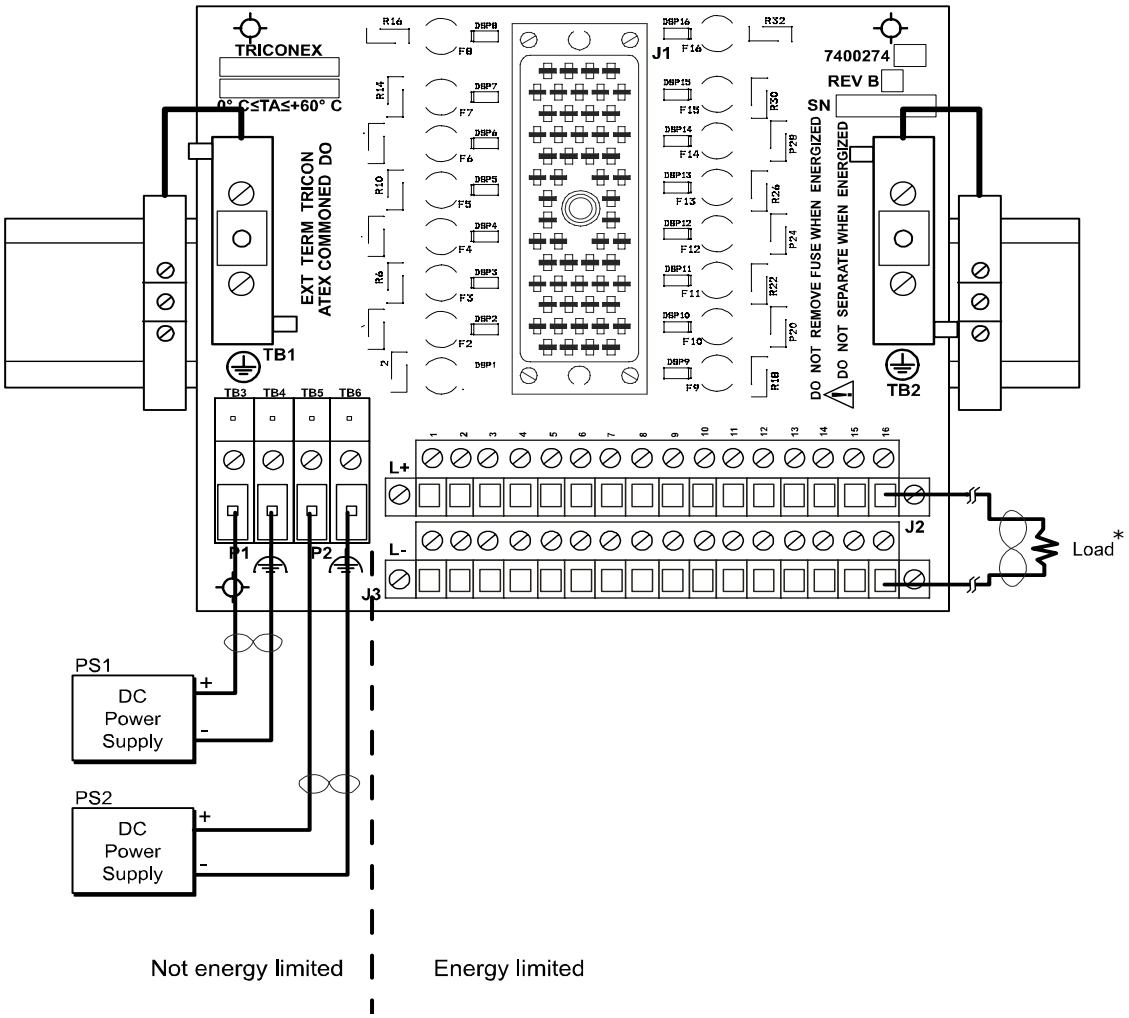

* A load must be installed at every point to prevent missing-load alarm.
If a field load is not available, install a 470 Ohm, 10 W load resistor.

Figure 224 Field Wiring for 9671-610 with a 3604E, 3624, or 3625 DO Module

This figure illustrates how to connect a 3664 or a 3674 dual digital output module and a 9671-610 to the field (1 of 32 module points shown).

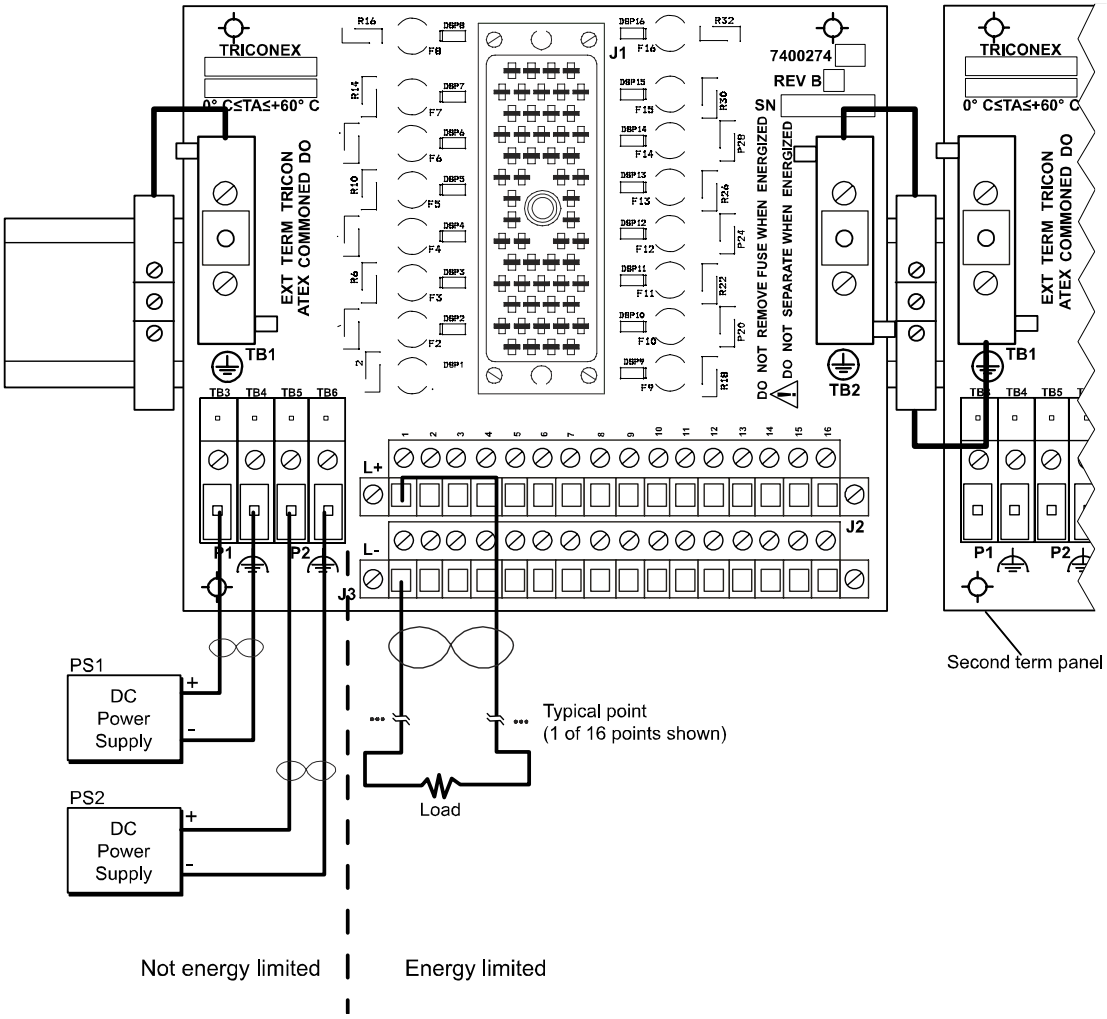

Figure 225 Field Wiring for 9671-610 with a 3664 or 3674 DO Module

Simplified Schematics

This is a simplified schematic of a typical 16-point non-commoned digital output module with a commoned output panel (1 of 16 module points shown).

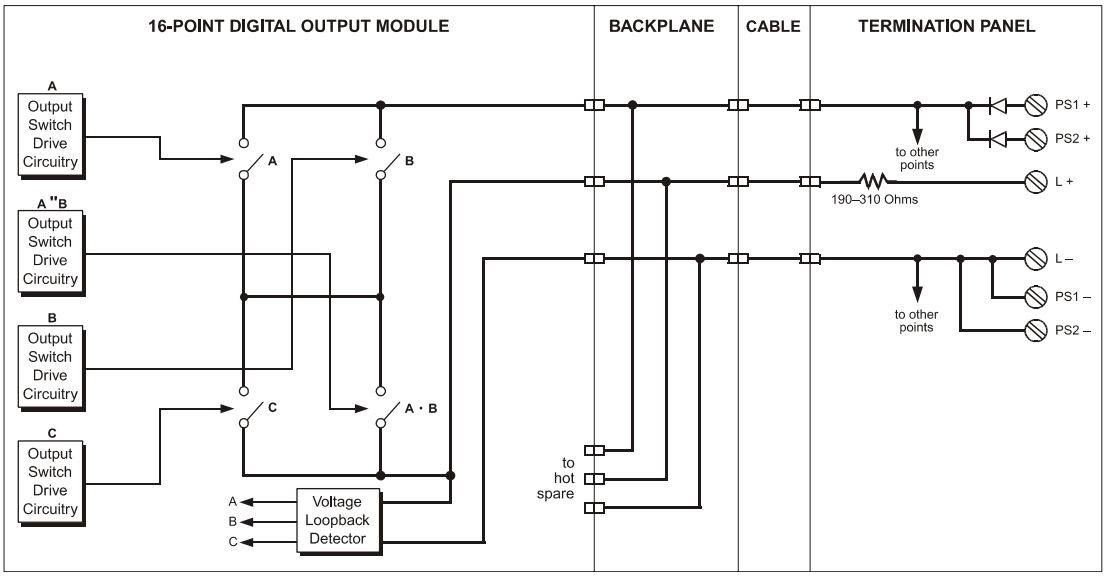

Figure 226 Simplified Schematic of a 3604E Digital Output Module with a 9671-610 Panel

This is a simplified schematic of a typical 16-point, supervised, digital output module with self protection and a commoned digital output panel (1 of 16 module points shown).

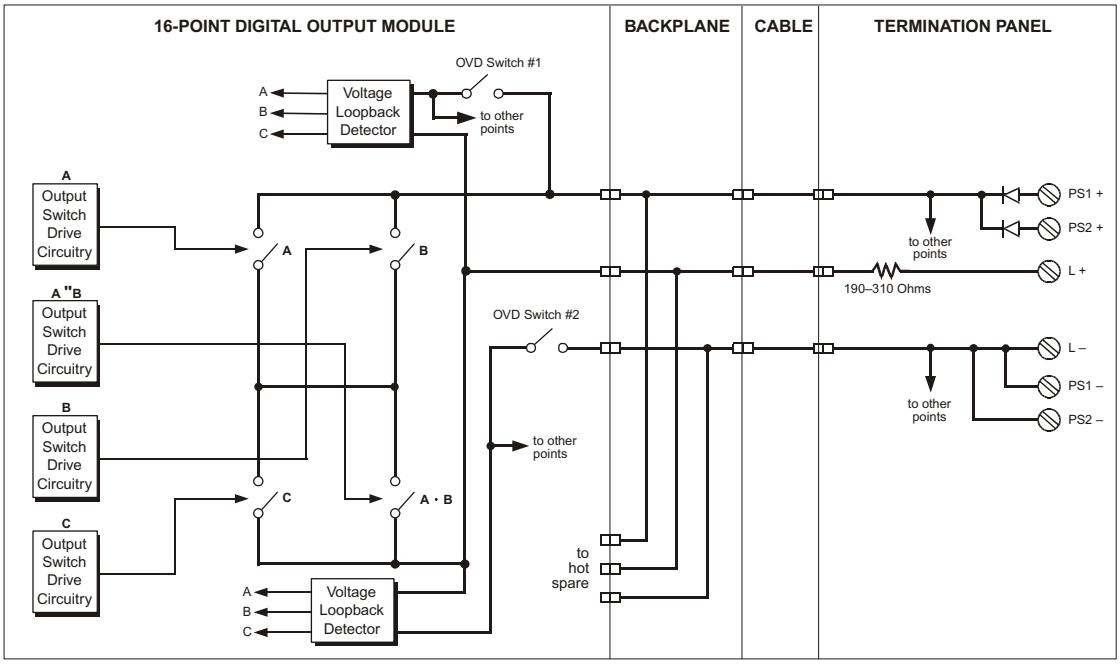

Figure 227 Simplified Schematic of a 3624 Digital Output Module with a 9671-610 Panel

This is a simplified schematic of a typical 32-point, supervised, digital output module with self protection and a commoned digital output panel (1 of 32 module points shown).

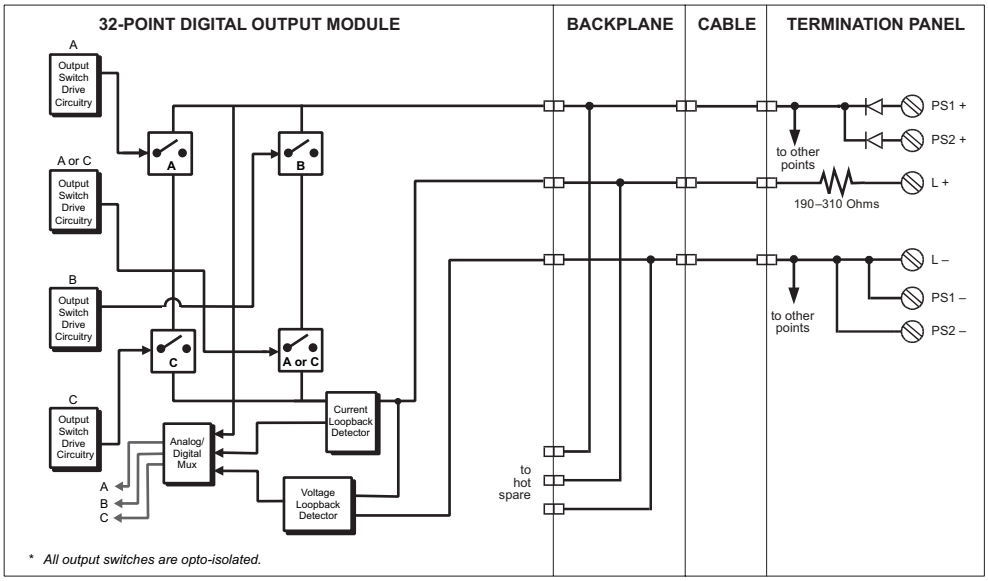

Figure 228 Simplified Schematic of a 3625 Digital Output Module with a 9671-610 Panel

This is a simplified schematic of a typical 32-point, dual digital output module with self protection and a commoned digital output panel (1 of 32 module points shown).

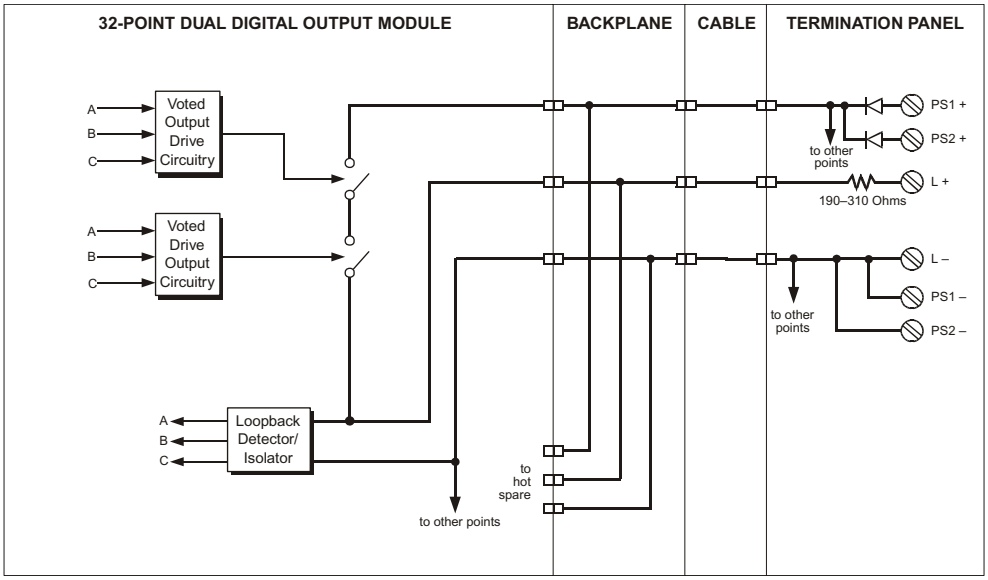

Figure 229 Simplified Schematic of a 3664 or 3674 Digital Output Module with a 9671-610 Panel

Pulse Input Term Panels

This section describes pulse input term panel 9793-110 (pulse input, 8 pts.).

9793-110 (pulse input, 8 pts.)

Termination panel 9793–110 is compatible with pulse input modules. Each panel has:

- Two, sixteen-position field terminals; support for 8 points
- Two terminals per point for differential analog input: I+, I–
- Two, one-position terminals for protective earth connection

Specifications

This table describes specifications for 9793-110.

Table 184 Specifications for Term Panel 9793-110

Feature	Description
Panel type	Pulse input
Points	8

This table describes cable and load parameters for 9793-110.

Table 185 Cable and Load Parameters for Term Panel 9793-110

Feature	IEC Symbol	ISA Symbol	Description for Zone 2 Group IIB
Operating temperature range	T_{amb}	T_{amb}	32° F to 140° F (0° C to 60° C)
Input Connection (I+ and I-) Specifications			
Maximum input voltage	U_i	V_{max}	32 V
Maximum input current	I_i	I_{max}	0.00355 A
Maximum input power	P_i	P_i	0.1136 W
C internal, maximum	C_i	C_i	0.038 µF
L internal, maximum	L_i	L_i	0.043 µH
Output Connection (I+ and I-) Specifications			
Maximum output voltage	U_o	V_{oc}	15 V
Maximum output current	I_o	I_{sc}	0.005 A
Maximum output power	P_o	P_o	0.075 W
C external, maximum	C_o	C_a	20.14 µF
L external, maximum	L_o	L_a	1 H

Compatible Modules

This table describes pulse input modules compatible with 9793–110.

Table 186 Modules Compatible with 9793-110

Module Part Number	Points per Module	Module Description
3511	8	20 Hz to 20 kHz pulse input, non-commoned, AC-coupled, 25 ms typical input update rate

Field Wiring Diagrams

This figure illustrates how to connect a 3511 pulse input module and a 9793–110 to the field.

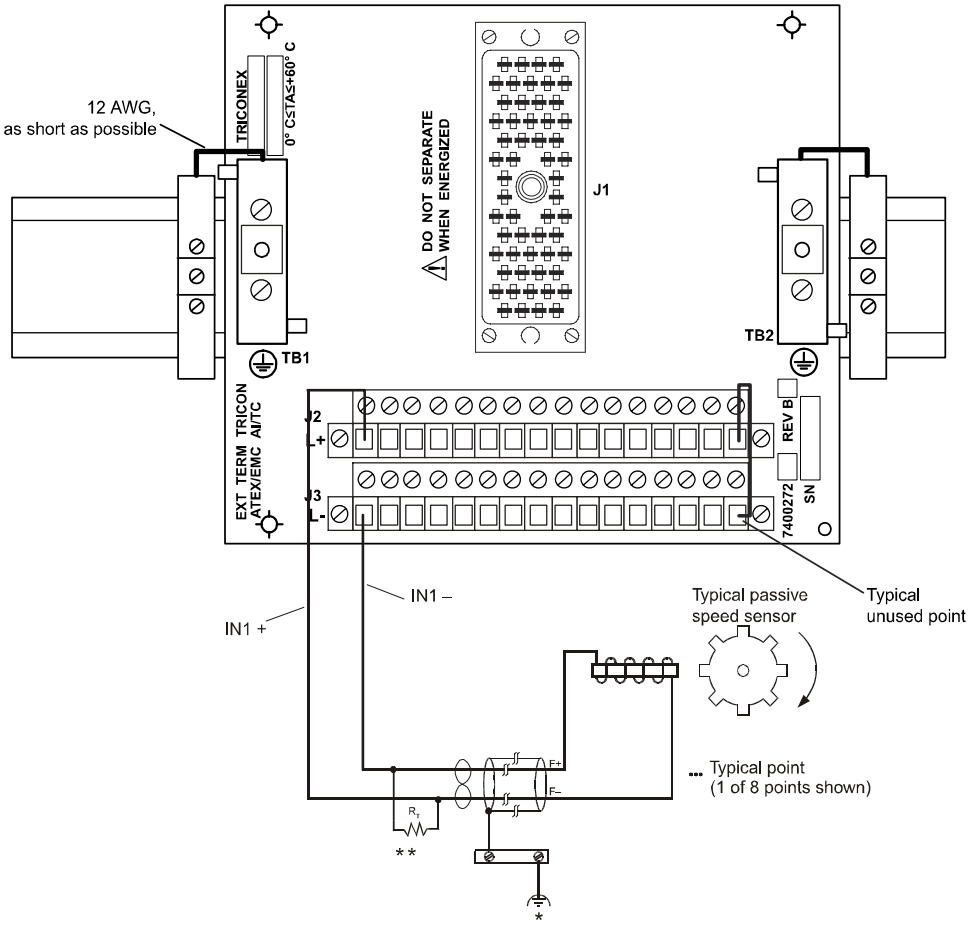

* Functional earth ground (quiet ground) is recommended for shield connections. For shield grounding instructions, see Appendix E.

** When possible, install a terminating resistor as shown. For further information, see Technical Application Note (TAN) #006, on the IPS Global Client Support Web Site.

Figure 230 Field Wiring for 9793-110 with a 3511 PI Module

CAUTION Unused points must be shorted together.

Simplified Schematics

This is a simplified schematic of a typical 8-point non-commoned pulse input module with a pulse input panel (1 of 8 module points shown).

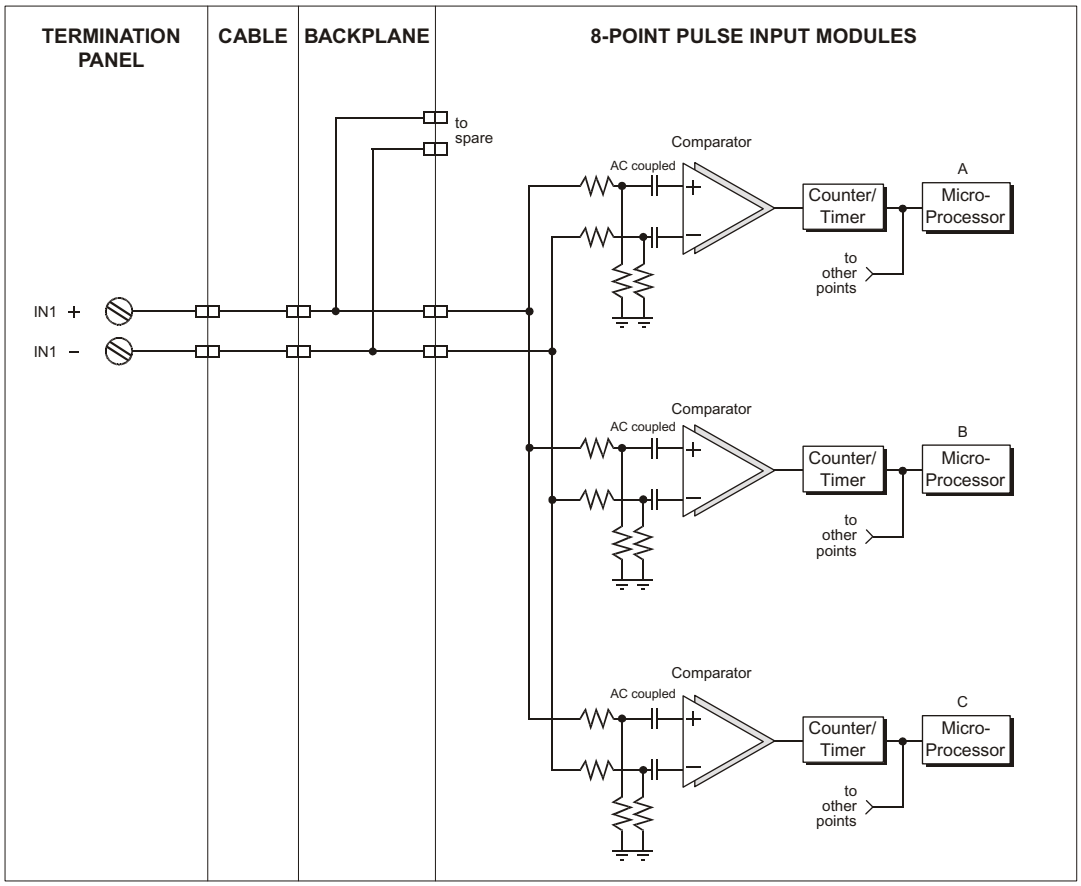

Figure 231 Simplified Schematic of a 3511 PI Module with a 9793-110 Panel

7

RG 1.180 Termination Panels

Overview 296

Analog Input Term Panels 297

Analog Output Term Panels 319

Pulse Input Term Panels 323

RTD/TC/AI Input Term Panels 326

Overview

In October 2003, the United States Nuclear Regulatory Commission (NRC) issued Revision 1 of Regulatory Guide 1.180, "Guidelines for Evaluating Electromagnetic and Radio-Frequency Interference in Safety-Related Instrumentation and Control Systems." Regulatory Guide 1.180 endorses design, installation, and testing practices acceptable to the NRC staff for addressing the effects of EMI/RFI and power surges on safety-related instrumentation and control (I&C) systems in a nuclear power plant environment.

This chapter describes external termination panels (ETPs) that can be used in applications that are required to meet RG 1.180 guidelines. Note that throughout this manual these term panels are referred to as "RG 1.180" termination panels.

This table identifies RG 1.180 ETPs.

Table 187 RG 1.180 External Termination Panels

Term Panel Type	Term Panel Model	Description
Analog Input	9790-610	4-20 mA, 0–5 VDC, 16 pts.
	9795-610	4-20 mA, 0–10 VDC, 16 pts.
	9792-610	4-20 mA, 0-5 VDC, 16 pts., 48 VDC field
	9783-110	0-5 VDC, voltage input, 16 pts.
	9782-110	TC input, isolated, 16 pts.
Analog Output	9860-610	8 pts.
Pulse Input	9794-110	16 pts.
RTD/TC/AI Input	9764-310	RTD/TC/AI input, 16 pts.

Analog Input Term Panels

This section describes analog input termination panels that you can use in applications that need to meet RG 1.180 requirements. Model numbers include:

- 9790-610 (4-20 mA, 0–5 VDC, 16 pts.)
- 9795-610 (4-20 mA, 0–5 VDC, 16 pts.)
- 9792-610 (4-20 mA, 0-5 VDC, 16 pts., user-configurable, 48 VDC field)
- 9783-110 (0-5 VDC voltage input, 16 pts.)
- 9782-110 (TC input, upscale/downscale, 16 pts.)

9790-610 (4-20 mA, 0-5 VDC, 16 pts.)

Termination panel 9790-610 is designed for use in applications that need to meet RG 1.180 requirements, and is compatible with 0 to 5 VDC analog input modules and HART analog input interface modules. Each panel has:

- Two, sixteen-position field terminals; support for 16 points
- Two terminals per point, for 4-20 mA transmitter (F+, F–)
- A four-position terminal for redundant 24 VDC loop power
- Two, one-position terminals for protective earth connection

Each positive terminal is current-limited with a 190-to-310-ohm series resistor. Each input has a precision 250-ohm resistor for 0-to-5 VDC current-to-voltage conversion.

The panel supports redundant 24 VDC power sources with diode ORing.

When using 32-point modules, you must use two term panels for each module. Each term panel comes with two sets of labels: 1-16 and 17-32. For information on how to apply the labels, see Appendix F, Panel Labels.

Specifications

This table describes general specifications for 9790-610.

Table 188 General Specifications for Term Panel 9790-610

Feature	Description
Panel type	Current input, 4–20 mA
Points	16

Compatible Modules

This table describes analog input modules compatible with 9790-610.

Table 189 Modules Compatible with 9790-610

Module Part Number	Points per Module	Module Description
2770H	32	HART analog input interface
3700A	32	0–5 VDC, non-commoned, differential, DC-coupled, TMR, +6% input over-range measurement
3703E	16	0–5 VDC or 0–10 VDC (Use TriStation to configure input range), non-commoned, differential, isolated, TMR
3721	32	0 to 5 VDC or –5 to +5 VDC (Use TriStation to configure input range), differential, DC-coupled, TMR

CAUTION

When used with the 9790-610, the accuracy of the 3700A, 3703E, and 3721 modules may be affected by up to –0.08% Full-Scale Range (FSR), at maximum temperature. As a result, the accuracy of these modules is +0.15% to –0.23% FSR, at 140° F (60° C).

Field Wiring Diagrams

This figure illustrates how to connect a 3700A, 3703E, or 3721 analog input module, or a HART analog input interface module, and a 9791-610 to the field (1 of 16 or 32 module points shown). See Appendix E, Shield Ground for shield ground installation guidelines.

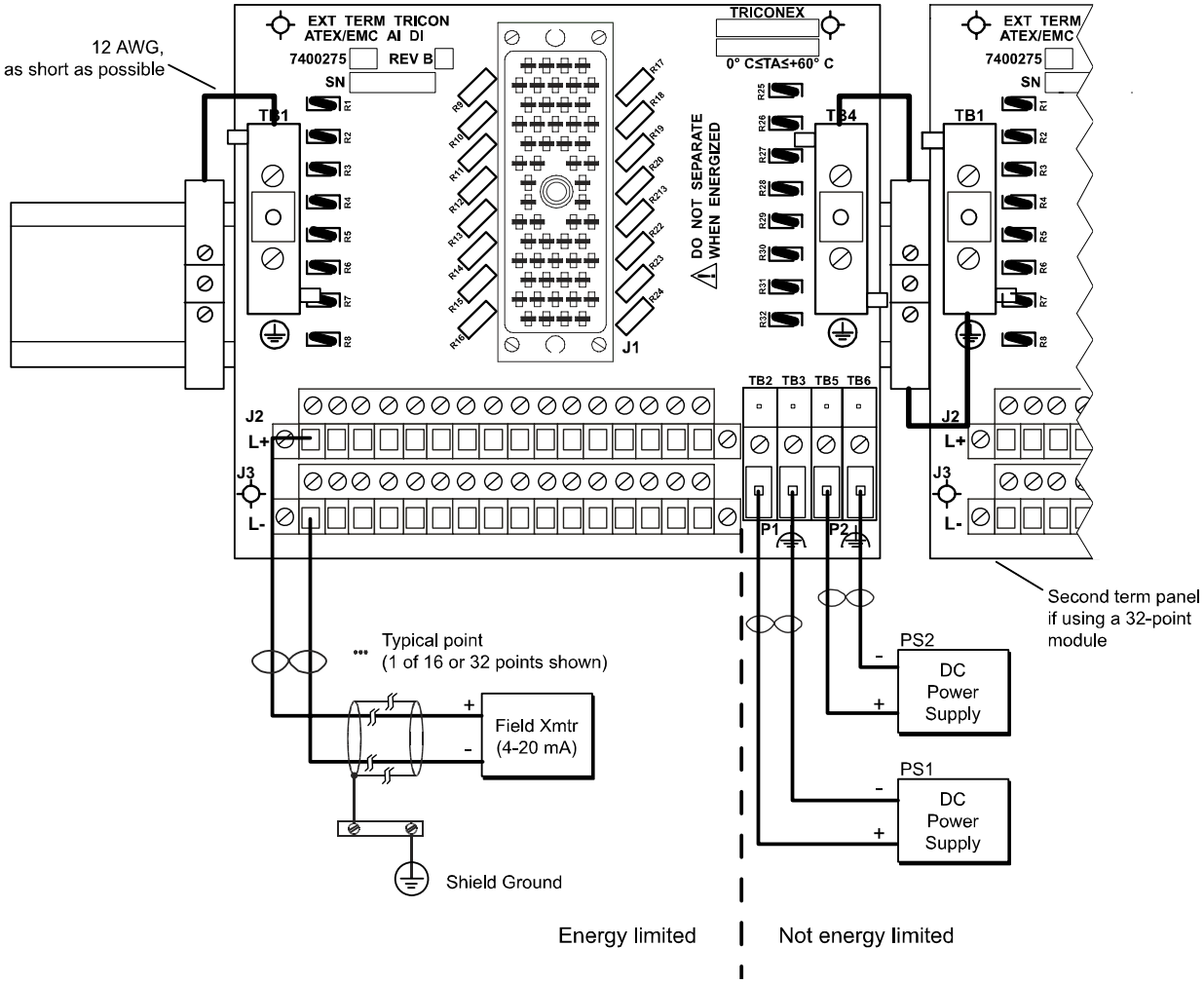

Figure 232 Field Wiring for 9790-610 with a 3700A, 3703E, or 3721 AI Module or 2770H HART AI Interface Module

Note For additional instructions on installing HART Interface Modules, see the *Planning and Installation Guide for Tricon v9–v10 Systems*.

Simplified Schematics

This is a simplified schematic of a typical 32-point non-commoned analog input module with a current input panel (1 of 32 module points shown).

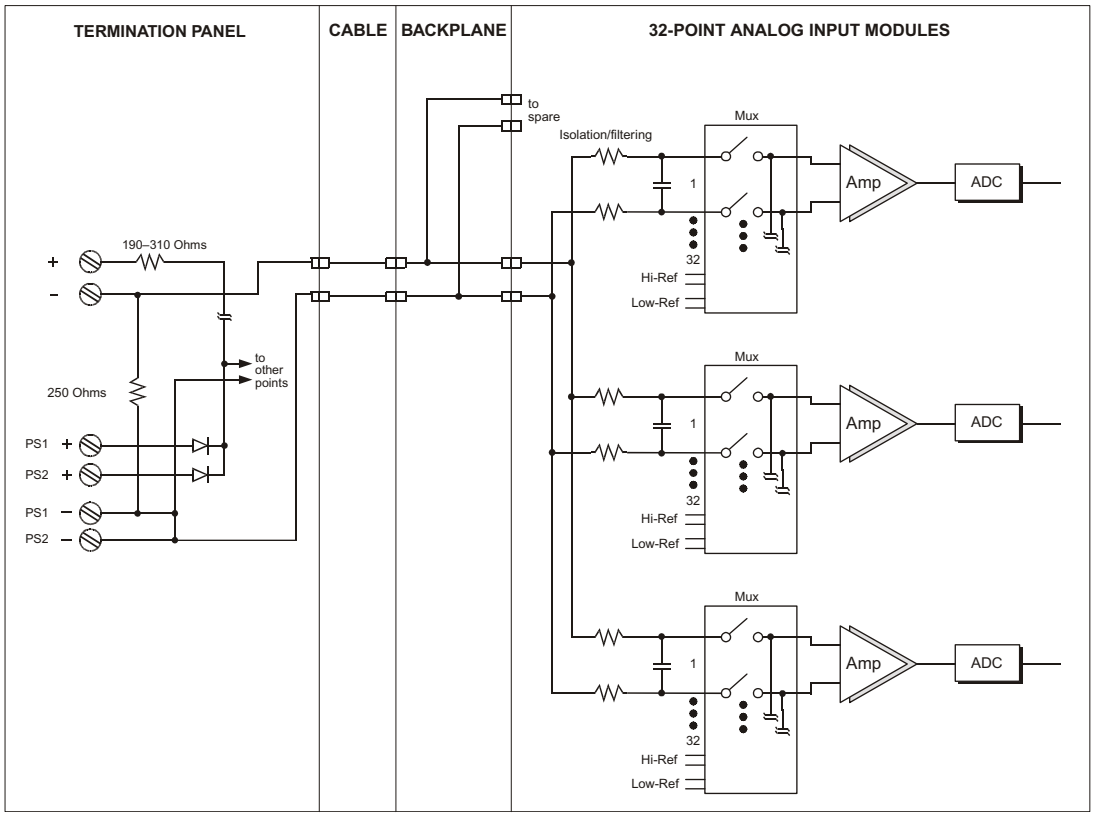

Figure 233 Simplified Schematic of a 3700A or 3721 Analog Input Module with a 9790-610 Panel

This is a simplified schematic of a typical 16-point non-commoned analog input module with a current input panel (1 of 16 module points shown).

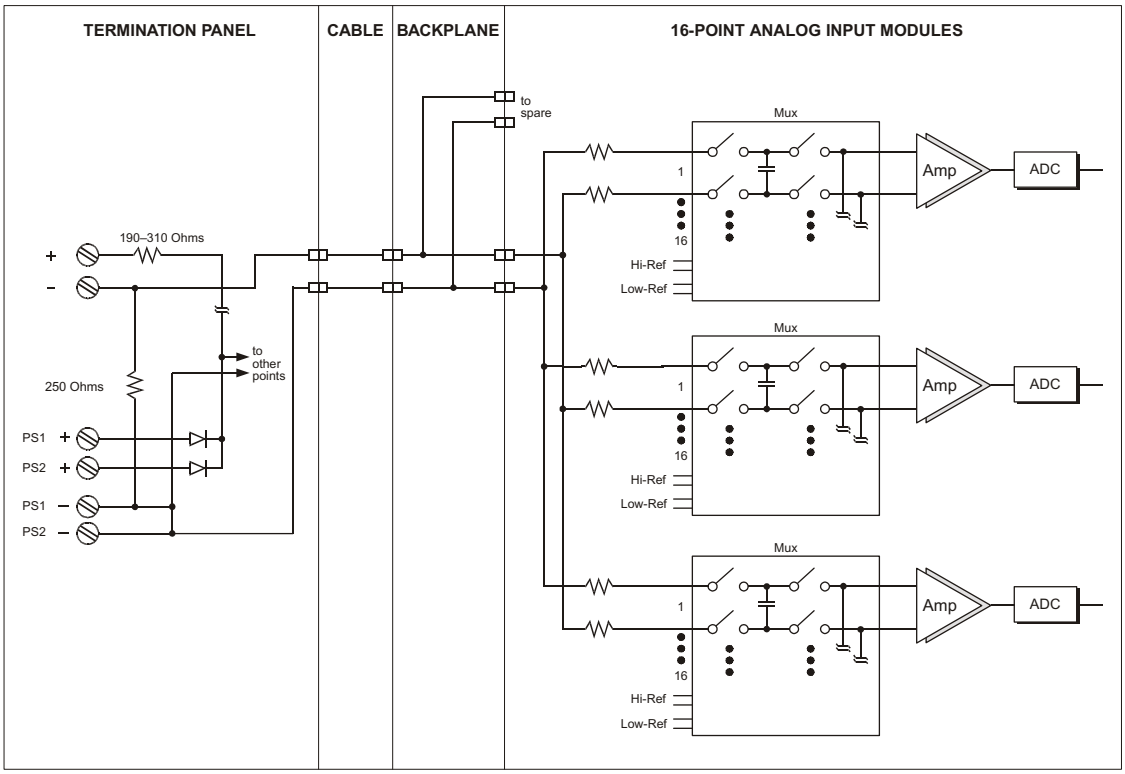

Figure 234 Simplified Schematic of a 3703E Analog Input Module with a 9790-610 Panel

This is a simplified schematic of a Model 2770H HART Analog Input Interface Module with a current input panel (1 of 32 module points shown).

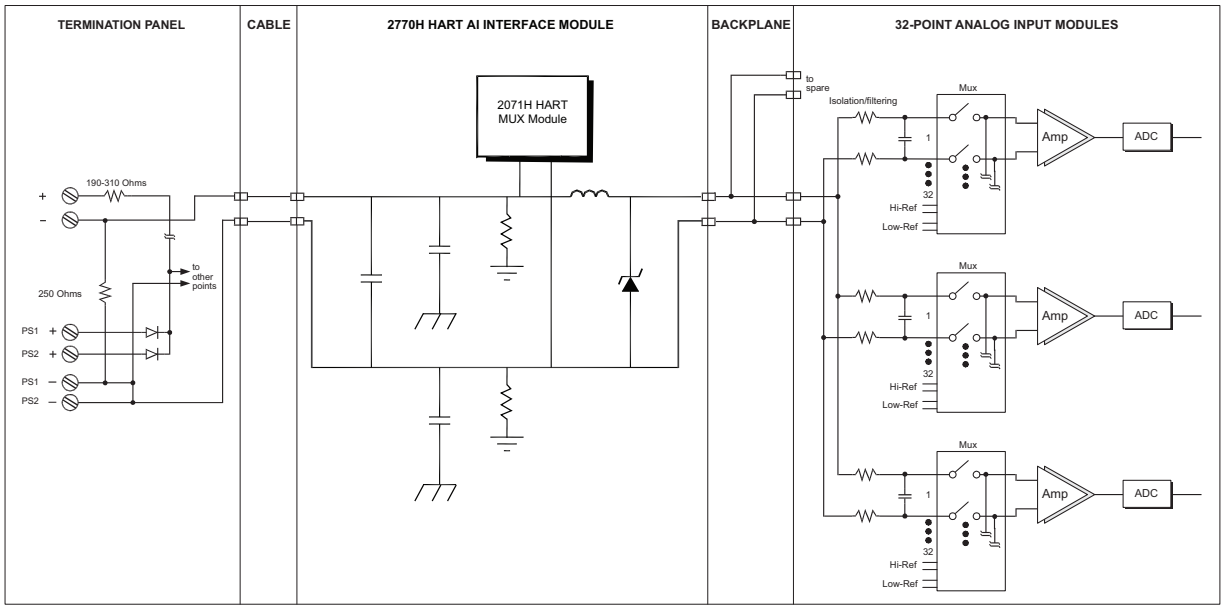

Figure 235 Simplified Schematic of a 2770H HART AI Interface Module with a 3700A or 3721 Analog Input Module and a 9790-610 Panel

9795-610 (4-20 mA, 0-5 VDC, 16 pts.)

Termination panel 9795-610 is designed for use in applications that need to meet RG 1.180 requirements, and is compatible with 0 to 10 VDC analog input modules. Each panel has:

- Two, sixteen-position field terminals; support for 16 points
- Two terminals per point, for 4-20 mA transmitter (F+, F–)
- A four-position terminal for redundant 24 VDC loop power
- Two, one-position terminals for protective earth connection

Each positive terminal is current-limited with a 190-to-310-ohm series resistor. Each input has a precision 500-ohm resistor for 0-to-10 VDC current-to-voltage conversion.

The panel supports redundant 24 VDC power sources with diode ORing.

When using 32-point modules, you must use two term panels for each module. Each term panel comes with two sets of labels: 1-16 and 17-32. For information on how to apply the labels, see Appendix F, Panel Labels.

Specifications

This table describes general specifications for 9795-610.

Table 190 General Specifications for Term Panel 9795-610

Feature	Description
Panel type	Current input, 4–20 mA
Points	16

Compatible Modules

This table describes analog input modules compatible with 9795-610.

Table 191 Modules Compatible with 9795-610

Module Part Number	Points per Module	Module Description
3703E	16	0–5 VDC or 0–10 VDC (Use TriStation to configure input range), non-commoned, differential, isolated, TMR
3721	32	0 to 5 VDC or –5 to +5 VDC (Use TriStation to configure input range), differential, DC-coupled, TMR

CAUTION

When used with the 9795-610, the accuracy of these modules may be affected by up to –0.08% Full-Scale Range (FSR), at maximum temperature. As a result, the accuracy of these modules is +0.15% to –0.23% FSR, at 140° F (60° C).

Field Wiring Diagrams

This figure illustrates how to connect a 3703E or 3721 analog input module and a 9795-610 to the field (1 of 16 or 32 module points shown). See Appendix E, Shield Ground for shield ground installation guidelines.

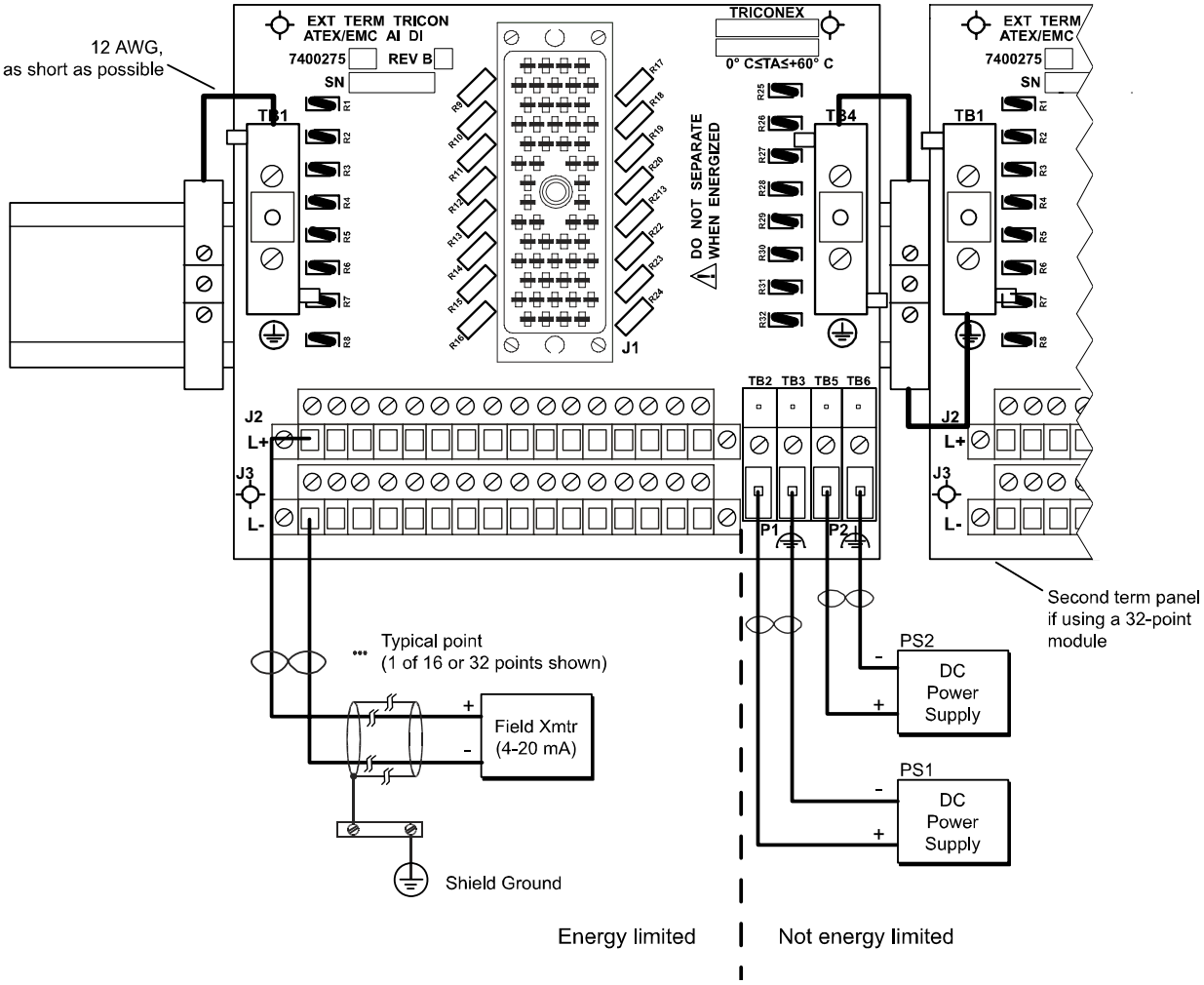

Figure 236 Field Wiring for 9795-610 with a 3703E or 3721 AI Module

Simplified Schematics

This is a simplified schematic of a typical 32-point non-commoned analog input module with a current input panel (1 of 32 module points shown).

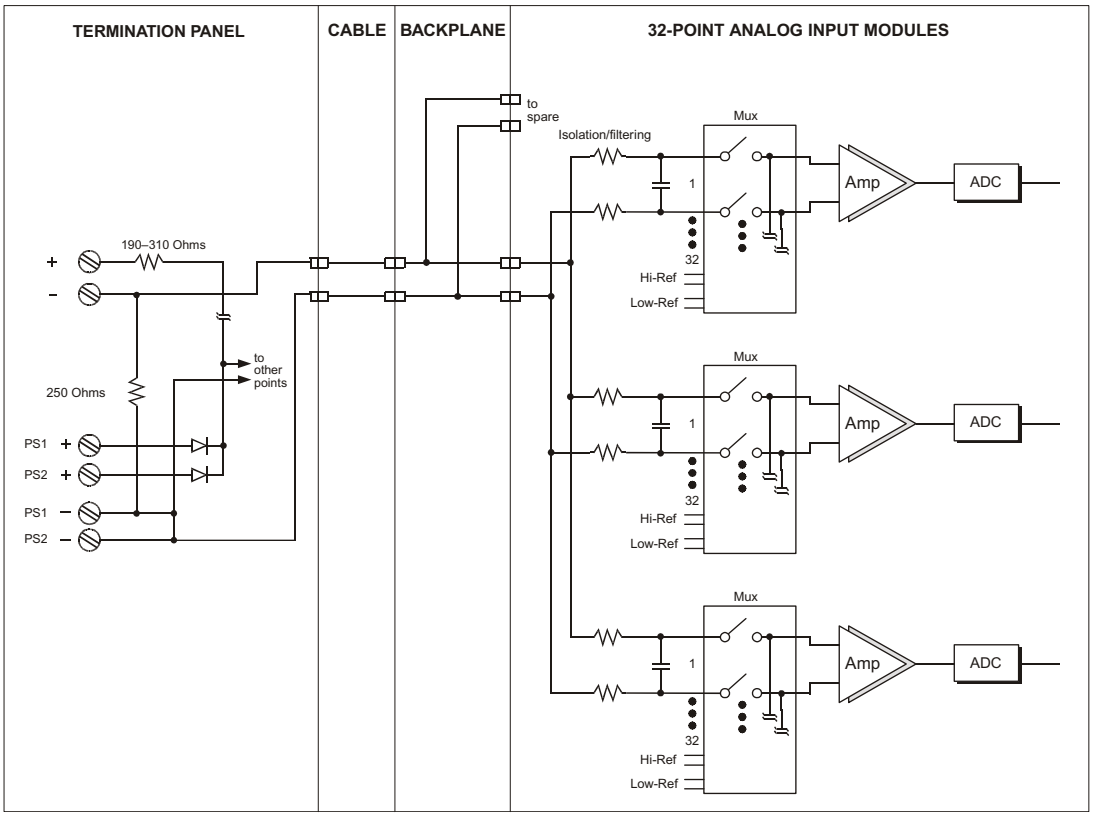

Figure 237 Simplified Schematic of a 3721 Analog Input Module with a 9795-610 Panel

This is a simplified schematic of a typical 16-point non-commoned analog input module with a current input panel (1 of 16 module points shown).

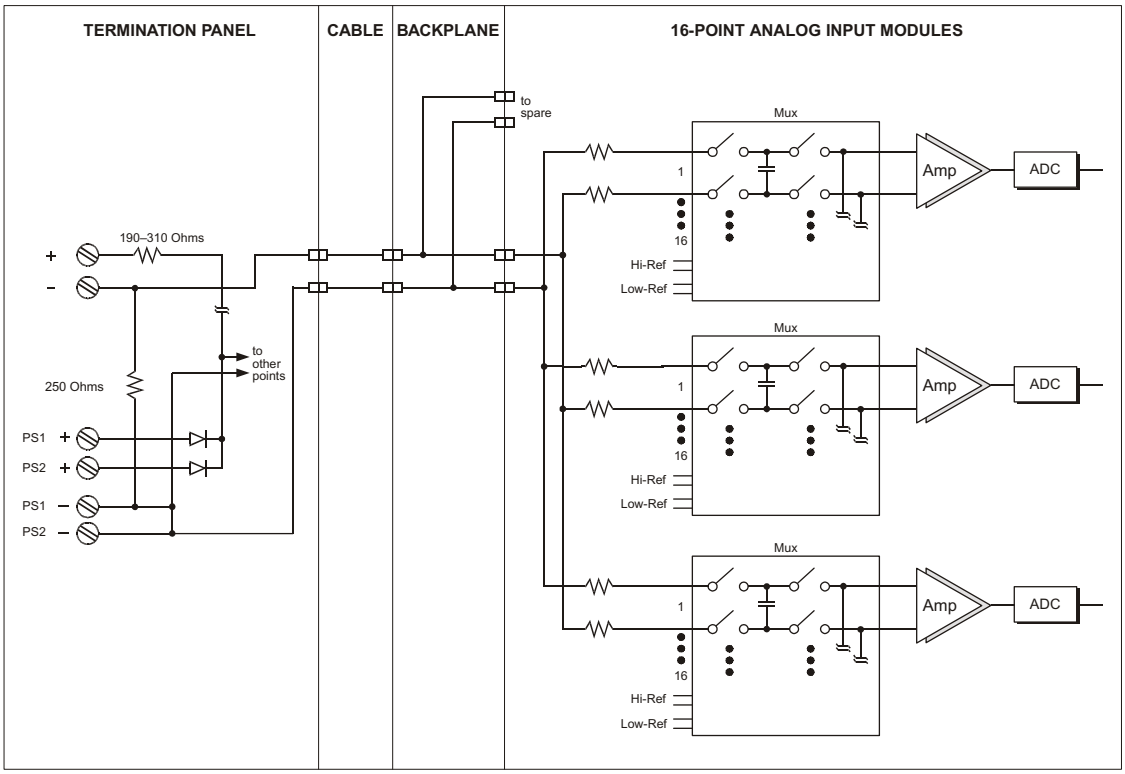

Figure 238 Simplified Schematic of a 3703E Analog Input Module with a 9795-610 Panel

9792-610 (4-20 mA, 0-5 VDC, 16 pts., user-configurable, 48 VDC field)

Termination panel 9792–610 is designed for use in applications that need to meet RG 1.180 requirements, and is compatible with 0 to 5 VDC and -5 to +5 VDC analog input modules. Each panel has:

- Three, sixteen-position field terminals; support for 16 points
- One terminal per point for power output (T+)
- Two terminals per point for 4-20 mA transmitter (T-, A); points are jumper configurable
- Two, one-position terminals for protective earth connection

Each positive terminal is current-limited with a series 250 ohm PTC in parallel with a 3.3 kilohm resistor. Each input has a precision 250 ohm resistor for 0–5 VDC current-to-voltage conversion.

The panel supports redundant 48 VDC power sources with diode ORing.

When using 32-point modules, you must use two term panels for each analog input module. Each term panel comes with two sets of labels: 1-16 and 17-32. For information on how to apply the labels, see Appendix F, Panel Labels.

Specifications

This table describes specifications for 9792–610.

Table 192 Specifications for Term Panel 9792-610

Feature	Description
Panel type	Current input, user-configurable
Points	16

Compatible Modules

This table describes analog input modules compatible with 9792–610.

Table 193 Modules Compatible with 9792-610

Module Part Number	Points per Module	Module Description
3700	32	0–5 VDC, non-commoned, differential, DC-coupled, TMR
3700A	32	0–5 VDC, non-commoned, differential, DC-coupled, TMR, +6% input over-range measurement
3703E	16	0–5 VDC or 0–10 VDC (Use TriStation to configure for 0–5 VDC), non-commoned, differential, isolated, TMR
3721	32	0 to 5 VDC or –5 to +5 VDC (Use TriStation to configure input range), differential, DC-coupled, TMR

CAUTION

When used with the 9792-610, the accuracy of these modules may be affected by up to -0.08% Full-Scale Range (FSR), at maximum temperature. As a result, the accuracy of these modules is +0.15% to -0.23% FSR, at 140° F (60° C).

Field Wiring Diagrams

This figure illustrates how to connect a 16-point or 32-point analog input module and a 9792-610 to the field (1 of 16 or 32 module points shown). See Appendix E, Shield Ground for shield ground installation guidelines.

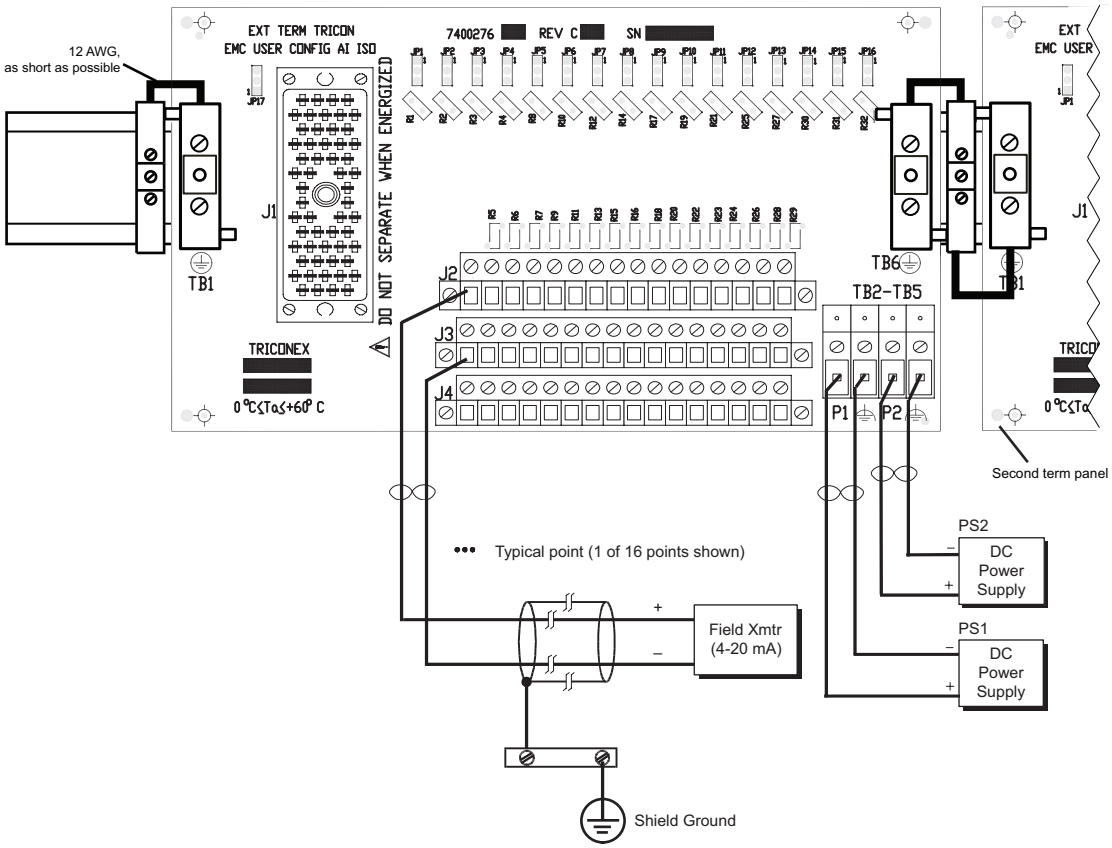

Figure 239 Field Wiring for 9792-610 with a 3700, 3700A, 3703E, or 3721 AI Module

This figure illustrates how to connect a 16-point or 32-point analog input module and a 9792-610 to the field and another system, such as a DCS (1 of 16 or 32 module points shown). See Appendix E, Shield Ground for shield ground installation guidelines.

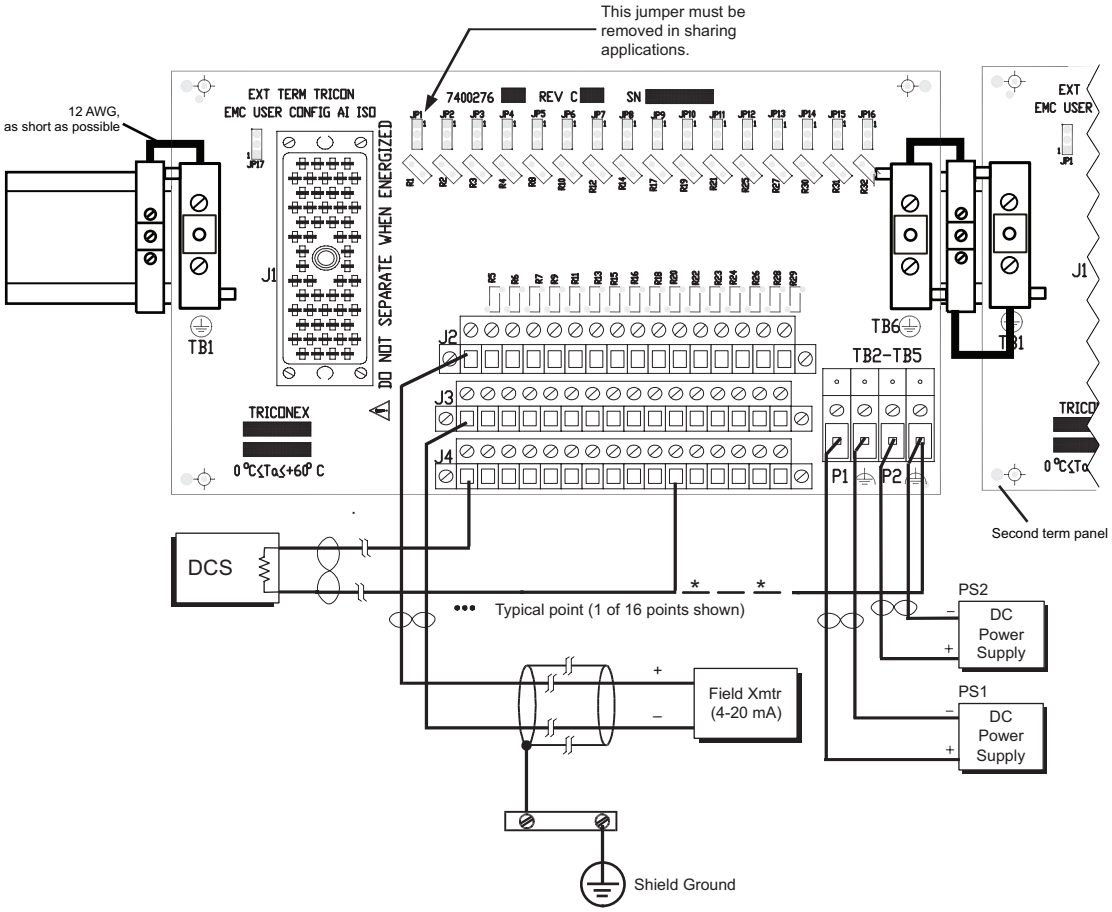

* Return may be connected to an unused A terminal with the JP jumper in place or to a – PS terminal.

Figure 240 Field Wiring for 9792-610 with a 3700, 3700A, 3703E, or 3721 AI Module—Sharing with Another System

WARNING

Sharing a transmitter between the Tricon and another system may violate restrictions regarding the segregation of safety and control functions. The sharing capability of this termination panel should only be used in those applications where these restrictions do not exist, or can be otherwise mitigated.

Simplified Schematics

This is a simplified schematic of a typical 32-point analog input module with a current input panel (1 of 32 module points shown).

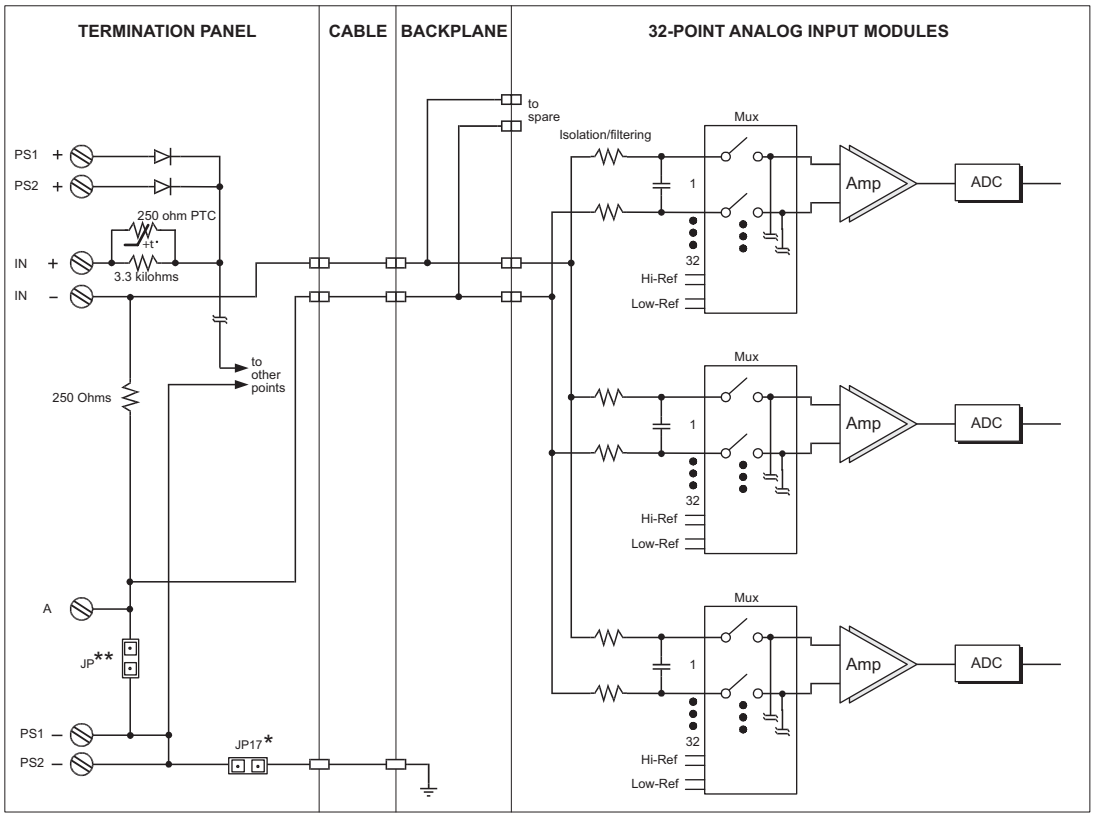

* When the 9792-610 panel is used with a 3700A or a 3721 module, do not remove the JP17 jumper.
** To aid sharing the field transmitter with another system (for example, a DCS), the JP jumper may be removed.

Figure 241 Simplified Schematic of a 3700, 3700A, or 3721 AI Module with a 9792-610 Panel

This is a simplified schematic of a typical 16-point analog input module with a current input panel (1 of 16 module points shown).

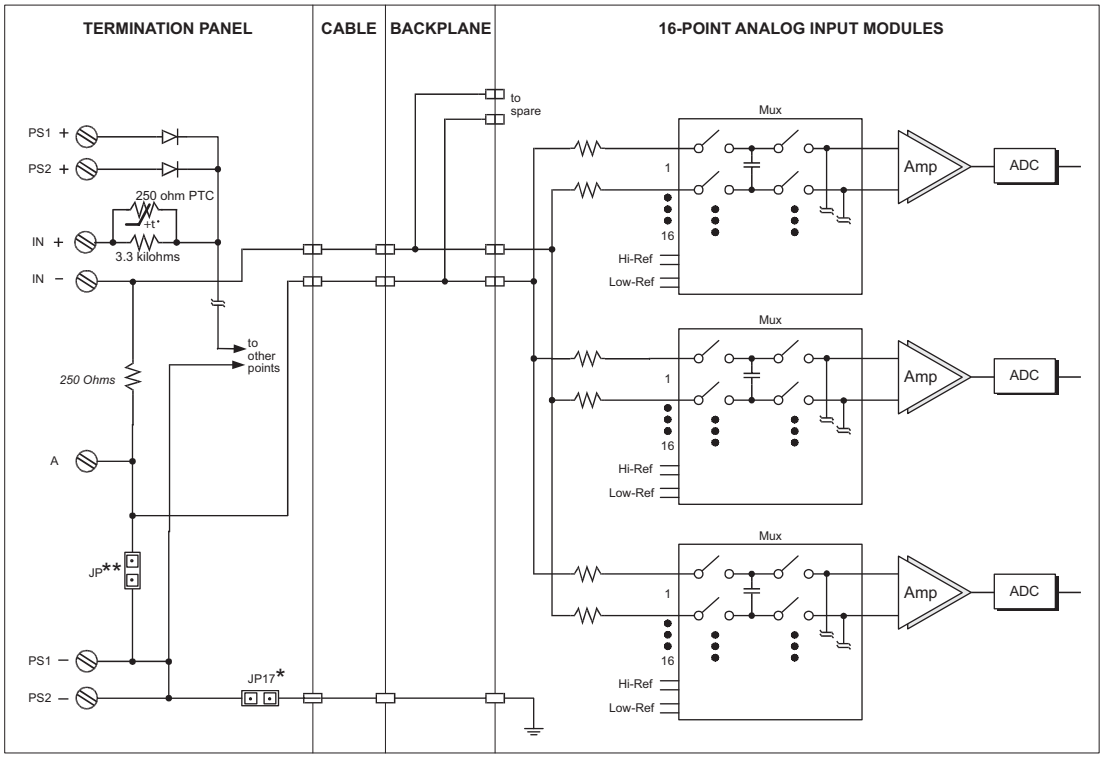

* For extended common-mode operation, you must remove the JP17 jumper.

** To aid sharing the field transmitter with another system (for example, a DCS), the JP jumper may be removed.

Figure 242 Simplified Schematic of a 3703E AI Module with a 9792-610 Panel

9783-110 (0-5 VDC voltage input, 16 pts.)

Termination panel 9783-110 is designed for use in applications that need to meet RG 1.180 requirements, and is compatible with 0 to 5 VDC analog input modules. Each panel has:

- Two, sixteen-position field terminals; support for 16 points
- Two terminals per point, for differential analog input (I+, I–)
- Two, one-position terminals for protective earth connection

When using 32-point modules, you must use two term panels for each module. Each term panel comes with two sets of labels: 1-16 and 17-32. For information on how to apply the labels, see Appendix F, Panel Labels.

Specifications

This table describes general specifications for 9783-110.

Table 194 General Specifications for Term Panel 9783-110

Feature	Description
Panel type	Voltage input, 0–5 VDC
Points	16

Compatible Modules

This table describes analog input modules compatible with 9783-110.

Table 195 Modules Compatible with 9783-110

Module Part Number	Points per Module	Module Description
3700A	32	0–5 VDC, non-commoned, differential, DC-coupled, TMR, +6% input over-range measurement
3703E	16	0–5 VDC or 0–10 VDC (Use TriStation to configure input range), non-commoned, differential, isolated, TMR
3721	32	0 to 5 VDC or –5 to +5 VDC (Use TriStation to configure input range), differential, DC-coupled, TMR

Field Wiring Diagrams

This figure illustrates how to connect a 3700A, 3703E, or 3721 analog input module and a 9783-110 to the field (1 of 16 or 32 module points shown). See Appendix E, Shield Ground for shield ground installation guidelines.

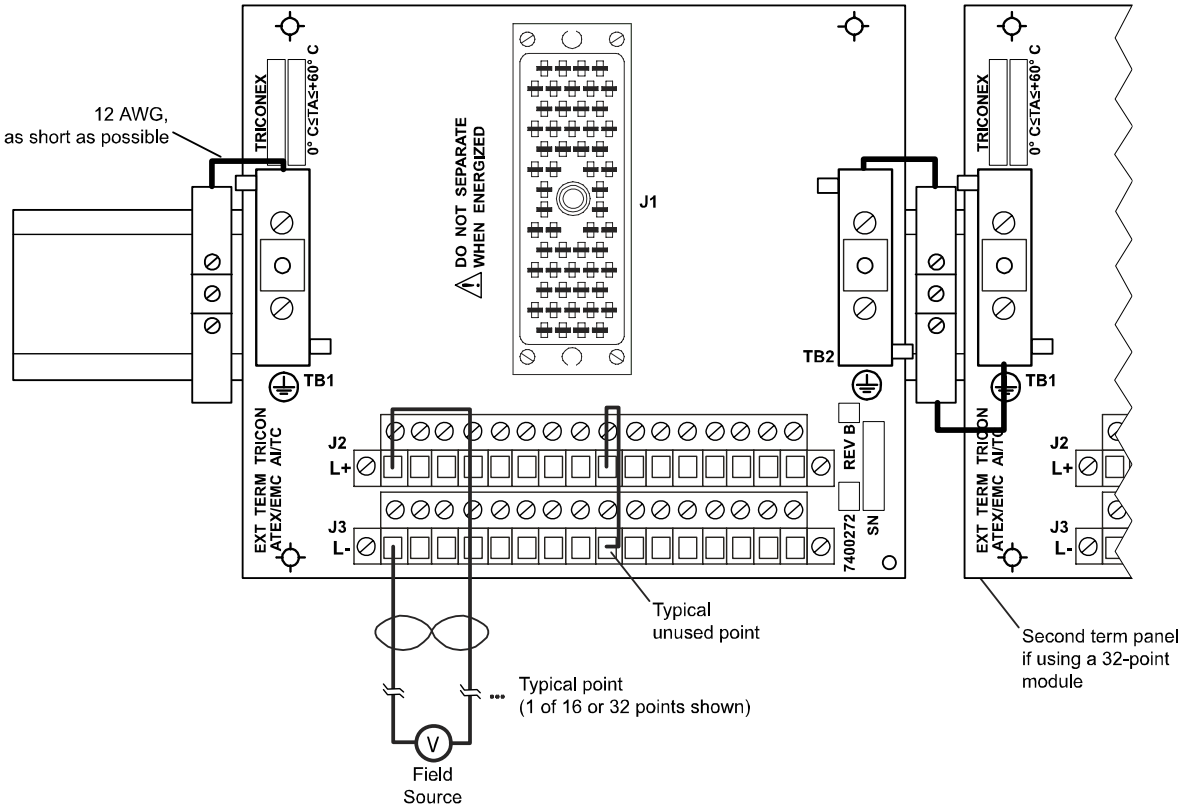

Figure 243 Field Wiring for 9783-110 with a 3700A, 3703E, or 3721 AI Module

CAUTION Unused points must be shorted together.

Simplified Schematics

This is a simplified schematic of a typical 32-point non-commoned analog input module with a voltage input panel (1 of 32 module points shown).

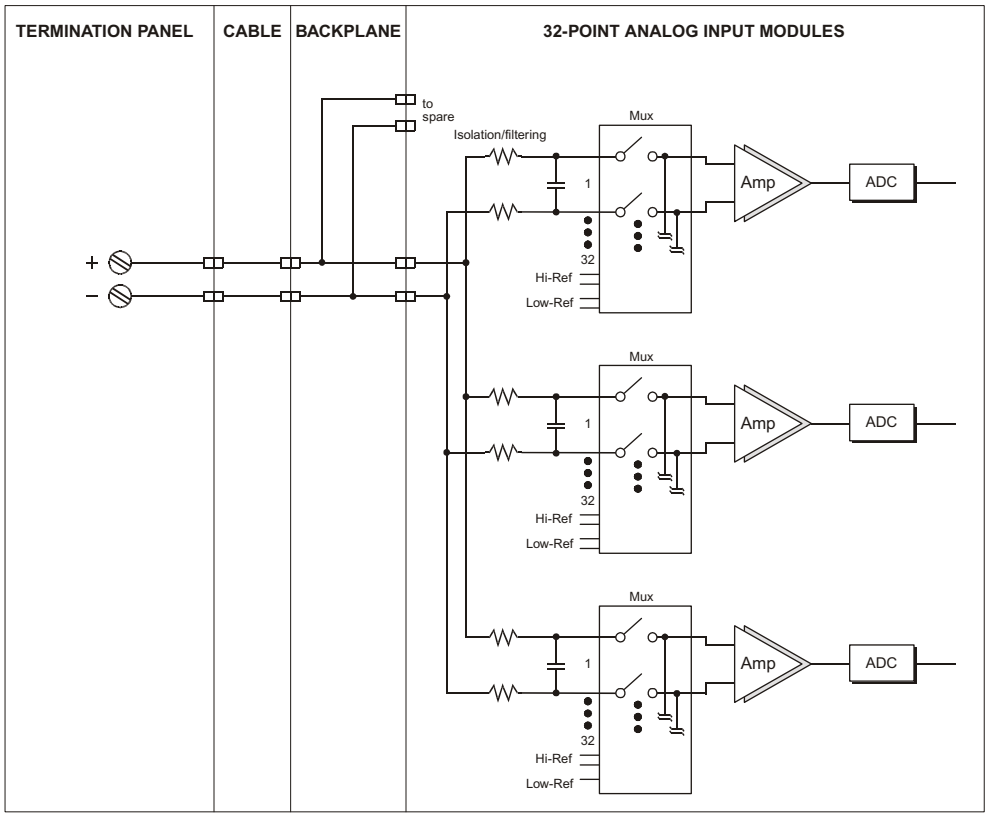

Figure 244 Simplified Schematic of a 3700A or 3721 Analog Input Module with a 9783-110 Panel

This is a simplified schematic of a typical 16-point commoned analog input module with a voltage input panel (1 of 16 module points shown).

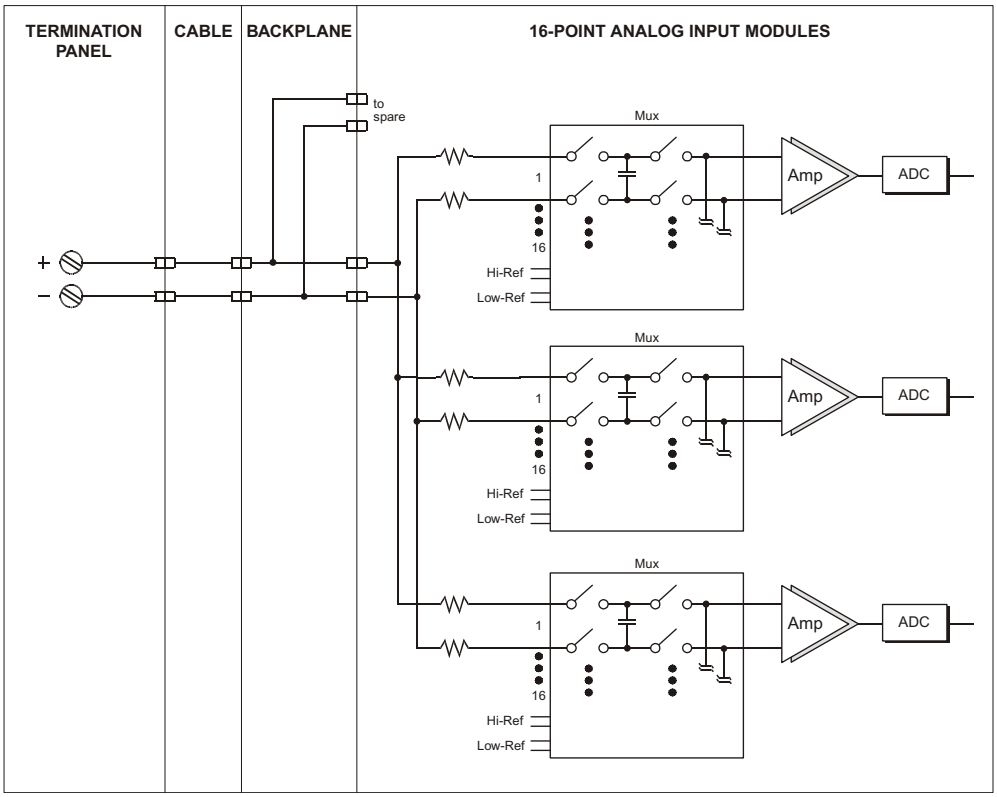

Figure 245 Simplified Schematic of a 3703E Analog Input Module with a 9783-110 Panel

9782-110 (TC input, upscale/downscale, 16 pts.)

Termination panel 9782-110 is designed for use in applications that need to meet RG 1.180 requirements, and is compatible with isolated thermocouple input modules.
Each panel has:

- Two, sixteen-position field terminals; support for 16 points
- Two terminals per point, for differential analog input (I+, I–)
- Two, one-position terminals for protective earth connection
- TMR cold-junction temperature sensors
- Upscale/downscale open-input bias circuitry

Specifications

This table describes general specifications for 9782-110.

Table 196 General Specifications for Term Panel 9782-110

Feature	Description
Panel type	Thermocouple input, upscale or downscale
Points	16

Compatible Modules

This table describes the analog input module compatible with 9782-110.

Table 197 Module Compatible with 9782-110

Module Part Number	Points per Module	Module Description
3708E	16	Type E, J, K, and T, differential, isolated, DC-coupled, TMR, upscale or downscale open-input detection. (Use TriStation to configure the thermocouple type and specify upscale or downscale open-input detection.)

Field Wiring Diagrams

This figure illustrates how to connect a 3708E thermocouple input module and a 9782-110 to the field (1 of 16 module points shown). See Appendix E, Shield Ground for shield ground installation guidelines.

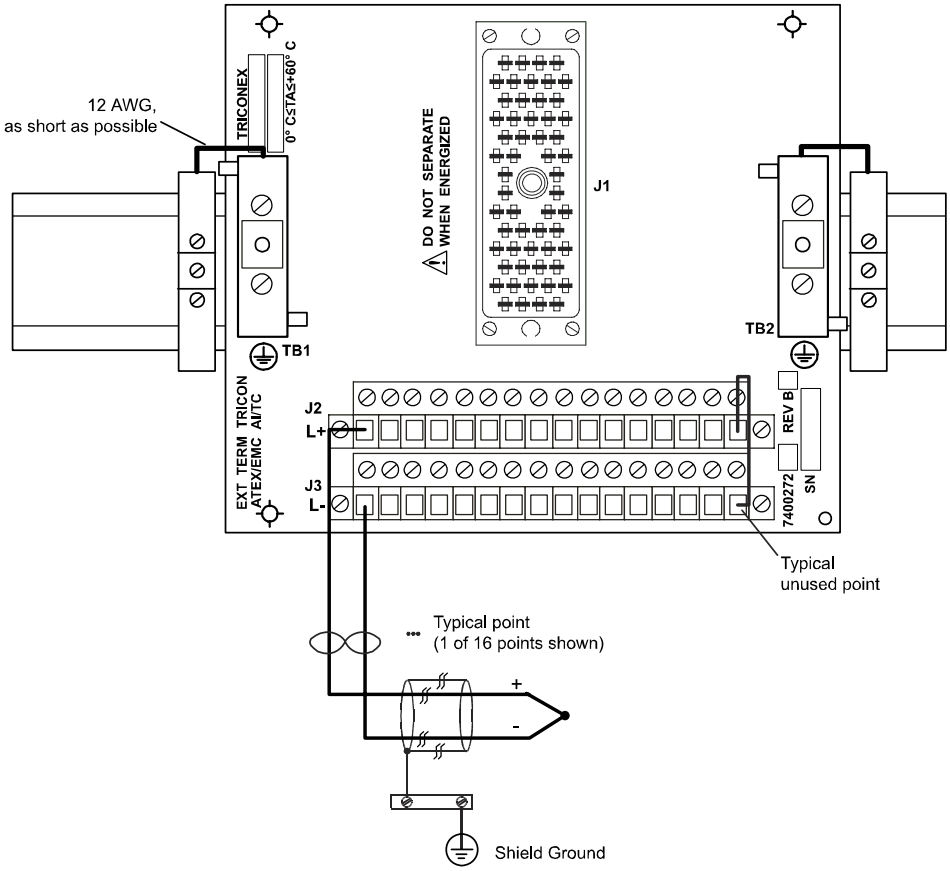

Figure 246 Field Wiring for 9782-110 with a 3708E Thermocouple Input Module

CAUTION Unused points must be shorted together.

Simplified Schematics

This is a simplified schematic of a typical 16-point thermocouple input module with a thermocouple input panel (1 of 16 module points shown).

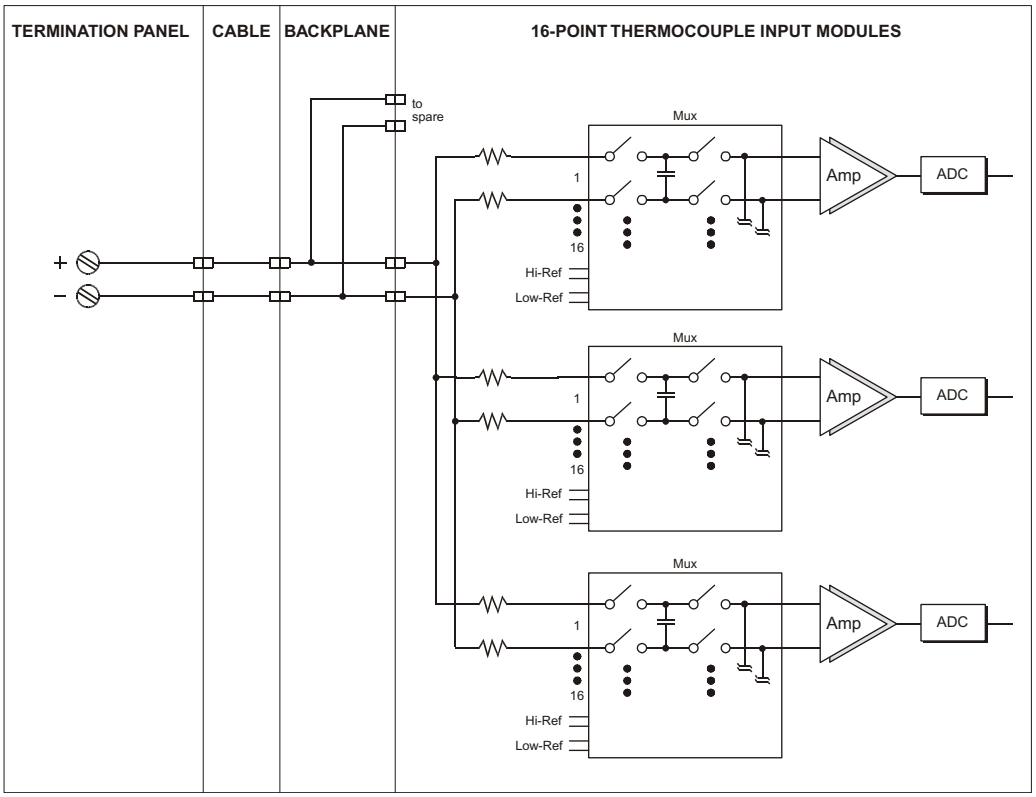

Figure 247 Simplified Schematic of a 3708E Thermocouple Input Module with a 9782-110 Panel

Analog Output Term Panels

This section describes analog output term panel 9860-610 (3805E/H module, 8 pts.), which you can use in applications that need to meet RG 1.180 requirements.

9860-610 (3805E/H module, 8 pts.)

Termination panel 9860–610 is designed for use in applications that need to meet RG 1.180 requirements, and is compatible with 3805E and 3805H 4–20 mA output modules and 2870H HART analog output interface modules. Each panel has:

- Two, eight-position field terminals; support for eight points
- Two terminals per point: Out, Rtn (L+, L–)
- A four-position terminal for redundant 24 VDC loop power
- Two, one-position terminals for protective earth connection

Specifications

This table describes specifications for 9860–610.

Table 198 Specifications for Term Panel 9860-610

Feature	Description
Panel type	Current output
Points	8

Compatible Modules

This table describes the analog output module compatible with 9860–610.

Table 199 Module Compatible with 9860-610

Module Part Number	Points per Module	Module Description
2870H	8	HART analog output interface
3805E/H	8	4–20 mA, commoned-return, DC-coupled, TMR

Field Wiring Diagrams

This figure illustrates how to connect a 3805E or 3805H analog output module, or a HART analog output interface module, and a 9860–610 to the field (1 of 8 module points shown).

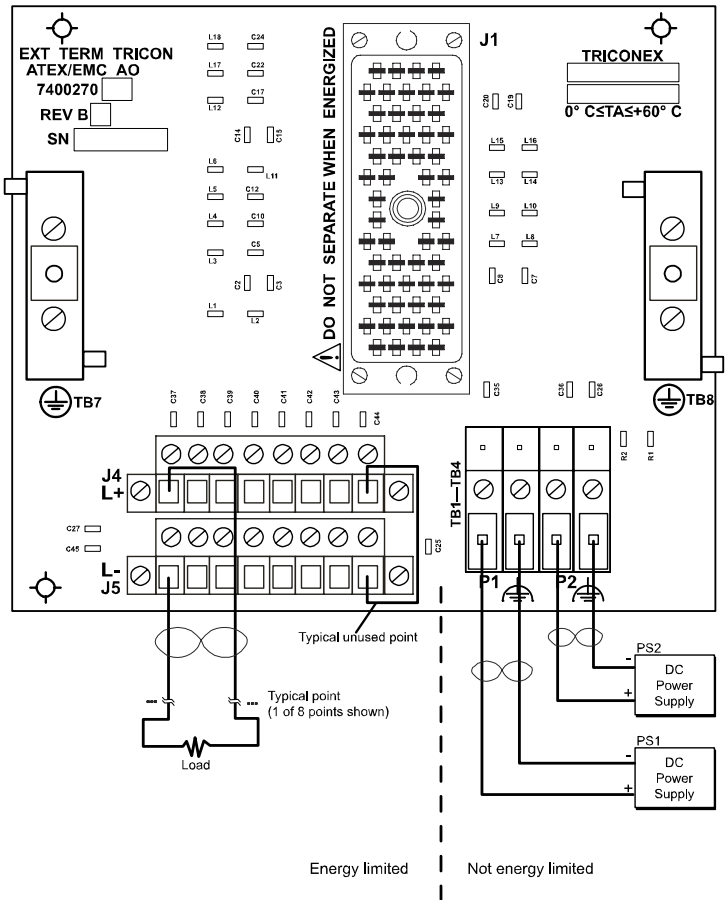

Figure 248 Field Wiring for 9860-610 with a 3805E or 3805H AO Module or a 2870H HART AO Interface Module

CAUTION Unused points must be shorted together.

Note For additional instructions on installing HART Interface Modules, see the *Planning and Installation Guide for Tricon v9–v10 Systems*.

Simplified Schematics

This is a simplified schematic of a typical 8-point commoned-return analog output module with an analog output panel (1 of 8 module points shown).

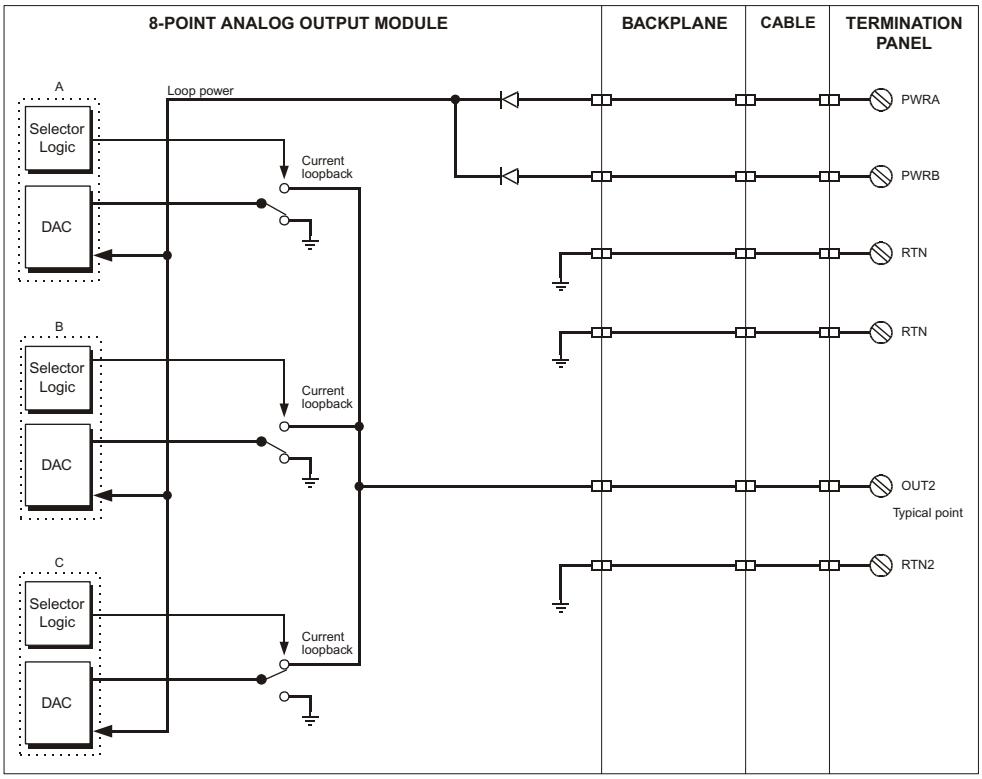

Figure 249 Simplified Schematic of a 3805E or 3805H Analog Output Module with a 9860-610 Panel

This is a simplified schematic of a Model 2870H HART Analog Output Interface Module with an analog output panel (1 of 8 module points shown).

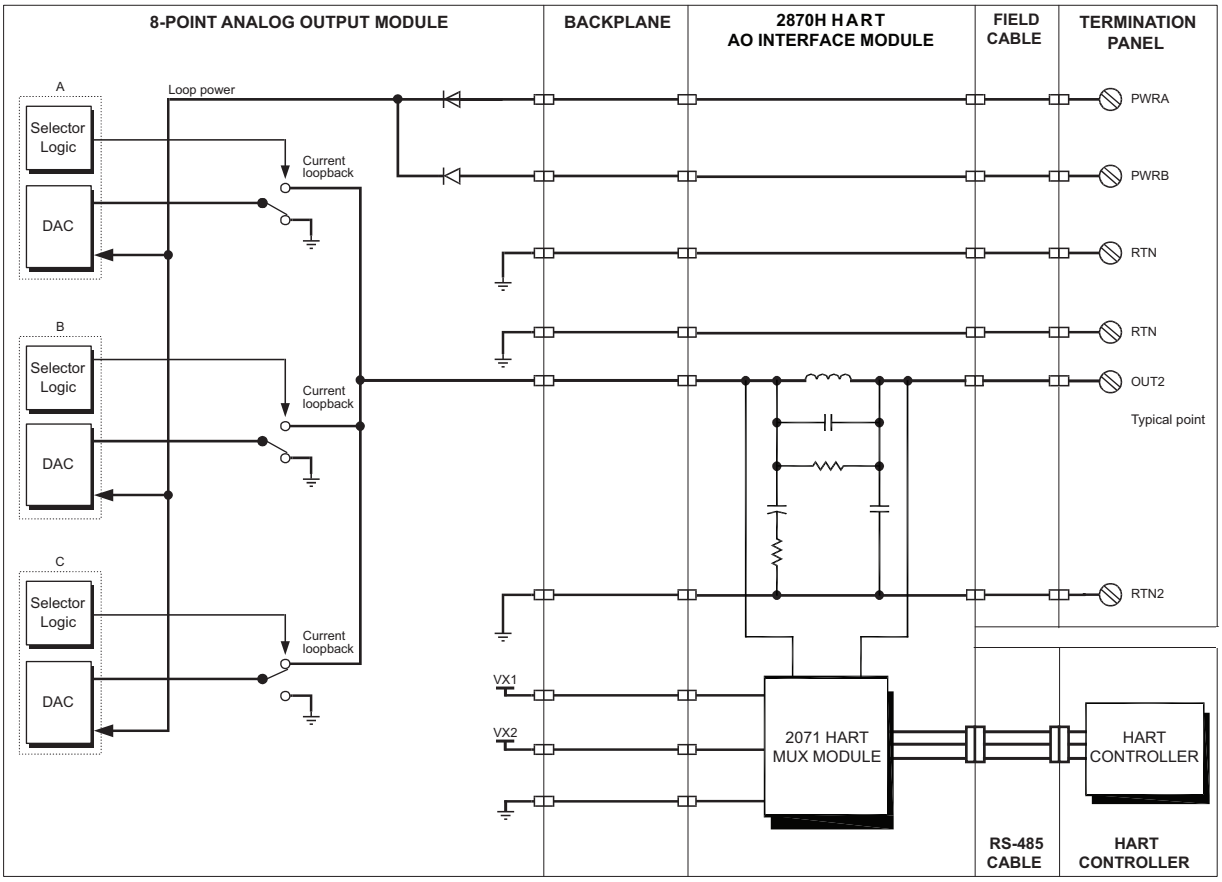

Figure 250 Simplified Schematic of a 2870H HART AO Interface Module with a 3805E or 3805H AO Module and a 9860-610 Panel

Pulse Input Term Panels

This section describes pulse input term panel 9794-110 (pulse input, 8 pts.), which you can use in applications that need to meet RG 1.180 requirements.

9794-110 (pulse input, 8 pts.)

Termination panel 9794–110 is designed for use in applications that need to meet RG 1.180 requirements, and is compatible with pulse input modules. Each panel has:

- Two, sixteen-position field terminals; support for 8 points
- Two terminals per point for differential analog input: I+, I–
- Two, one-position terminals for protective earth connection

Specifications

This table describes specifications for 9794-110.

Table 200 Specifications for Term Panel 9794-110

Feature	Description
Panel type	Pulse input
Points	8

Compatible Modules

This table describes pulse input modules compatible with 9794–110.

Table 201 Modules Compatible with 9794-110

Module Part Number	Points per Module	Module Description
3511	8	20 Hz to 20 kHz pulse input, non-commoned, AC-coupled, 25 ms typical input update rate

Field Wiring Diagrams

This figure illustrates how to connect a 3511 pulse input module and a 9794–110 to the field.

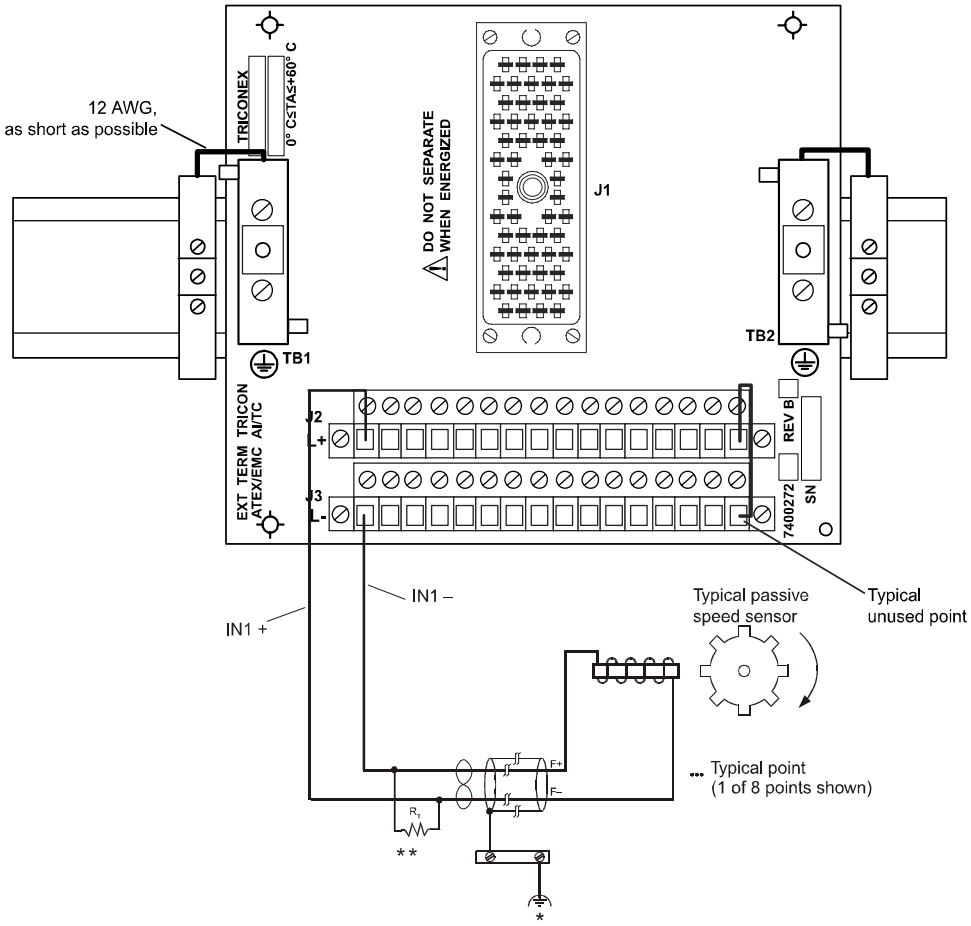

* Functional earth ground (quiet ground) is recommended for shield connections. For shield grounding instructions, see Appendix E.

** When possible, install a terminating resistor as shown. For further information, see Technical Application Note (TAN) #006, on the IPS Global Client Support Web Site.

Figure 251 Field Wiring for 9794-110 with a 3511 PI Module

CAUTION Unused points must be shorted together.

Simplified Schematics

This is a simplified schematic of a typical 8-point non-commoned pulse input module with a pulse input panel (1 of 8 module points shown).

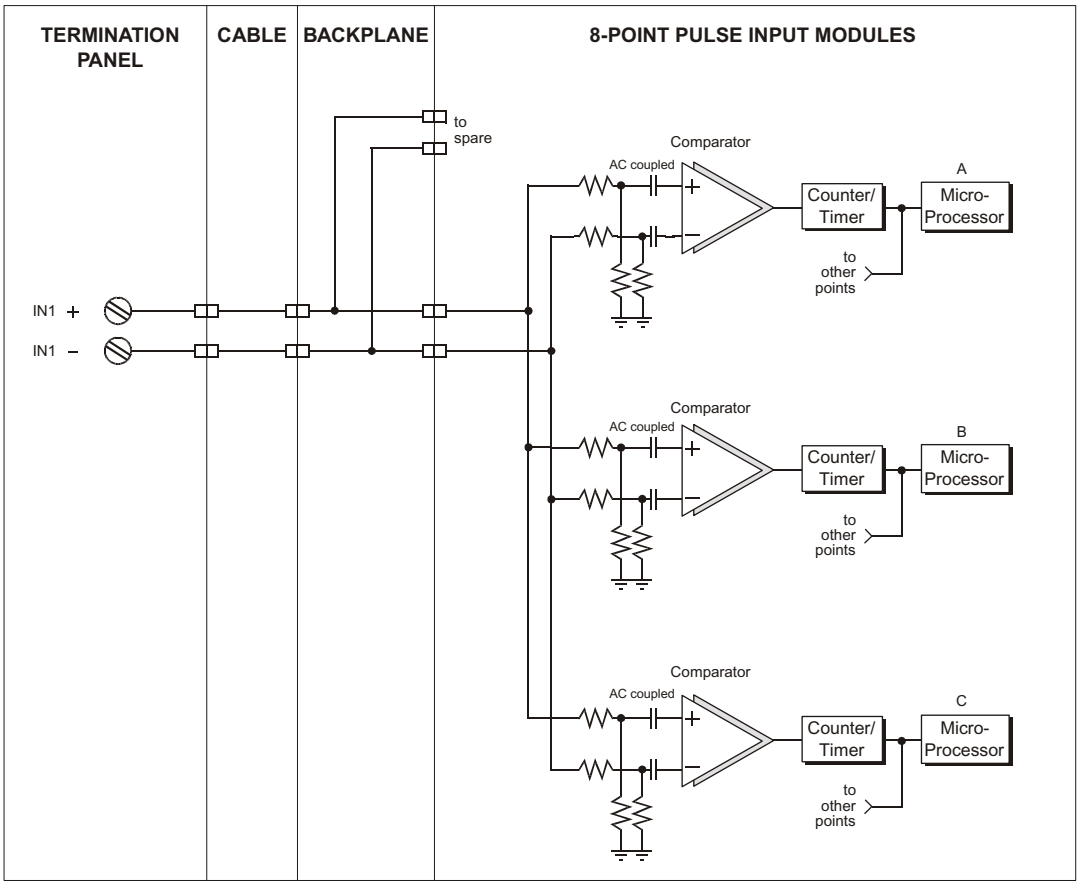

Figure 252 Simplified Schematic of a 3511 PI Module with a 9794-110 Panel

RTD/TC/AI Input Term Panels

Termination panel 9764-310 can be used in applications that are required to meet RG 1.180 guidelines. For more information, including a description, specifications, compatible modules, field wiring diagrams, and simplified schematics, see 9764-310 (RTD/TC/AI input, 0–5 VDC, 16 pts.) on page 218.

8

Fanned-Out Cables

Overview 328
Description of Fanned-Out Cables (9101-010) 328
Fanned-Out Cables with Digital Input Modules 329
Fanned-Out Cables with Digital Output Modules 335

Overview

This chapter describes fanned-out cables and how to use them with digital I/O modules.

Description of Fanned-Out Cables (9101-010)

Fanned-out cables are a low-cost alternative to using basic termination panels. Fanned-out cables allow you to marshal field signals in a separate enclosure up to 90 feet (27.4 meters) from a Tricon. One end of a fanned-out cable has a female connector that connects to a Tricon chassis backplane. The other end of the cable contains 50 fanned-out leads, each individually labeled with its corresponding connector pin number.

Each fanned-out cable has the following characteristics:

- PVC outer covering
- 56-pin connector at one end
- 50 stranded, stripped, tinned and labeled 22-gauge leads at opposite end

Note You must re-key the female connector to match its corresponding male connector on the Tricon chassis. For instructions on re-keying connectors, see Appendix A, Re-Keying Connectors.

Fanned-out cables should only be used with digital input and digital output modules. They are not certified for use with analog signals. Contact the Triconex Customer Support Center if you need a fanned-out cable for handling analog signals.

The part number for a fanned-out cable is 9101-010. The last two digits of the part number represent the standard cable length of 10 feet (3 meters). You may specify a different cable length for any product by replacing the last two digits of the model number with the desired length in 10-foot increments up to 90 feet (27.4 meters). For example, to order a 50-foot fanned-out cable, specify 9101-050.

If you need a fanned-out cable longer than 10 feet, please visit the IPS Global Client Support Web Site, at http://support.ips.invensys.com, and read Technical Application Note (TAN) number 0002, *Crosstalk on Digital Circuits*. Note that access to the IPS Global Client Support Web Site requires registration.

Fanned-Out Cables with Digital Input Modules

This section contains simplified schematics and wiring diagrams for connecting digital input modules to fanned-out cables.

Topics include:

- Connecting 32-Point Digital Input Modules to Fanned-Out Cables on page 329
- Connecting 64-Point Digital Input Modules to Fanned-Out Cables on page 333

Connecting 32-Point Digital Input Modules to Fanned-Out Cables

This table describes 32-point digital input modules that are compatible with a fanned-out cable.

Table 202 32-point Digital Input Modules Compatible with a Fanned-Out Cable

Module Part Number	Module Description
3501E	115 VAC/VDC, non-commoned, isolated, TMR
3501T	115 VAC/VDC, non-commoned, isolated, TMR
3502E	48 VAC/VDC, commoned in groups of 8, TMR with self-test
3503E	24 VAC/VDC, commoned in groups of 8, TMR with self-test
3505E	24 VAC/VDC, low-threshold, commoned in groups of 8, TMR.with self-test

Field Wiring Diagrams

This figure illustrates how to connect field wiring to a 32-point digital input module (with or without self-test) using a fanned-out cable.

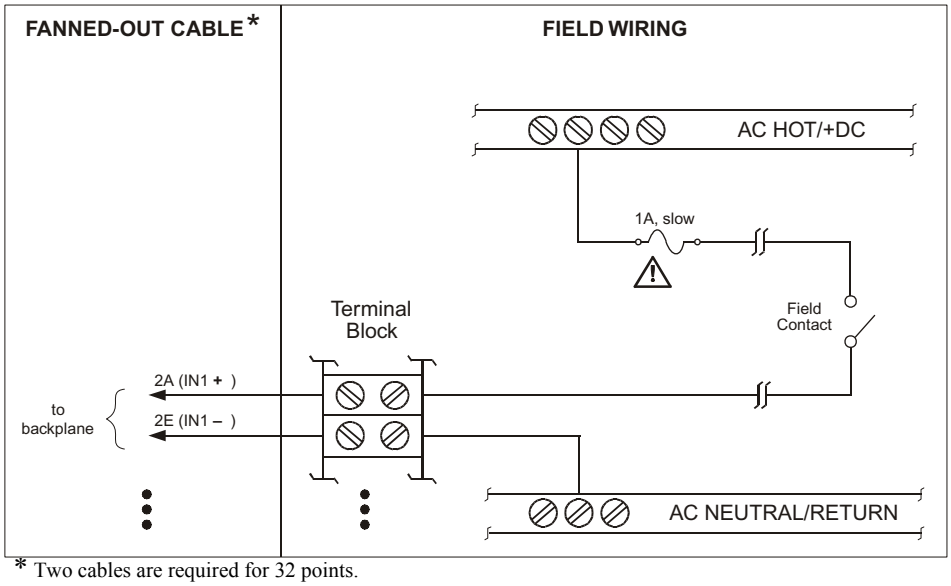

* Two cables are required for 32 points.
Each point must be independently wired.
3501 E supports commoned and uncommoned configurations.
3502E, 3503E, and 3505E support commoned configurations only.

Figure 253 Field Wiring for 9101-010 with a 3501E, 3501T, 3502E, 3503E, or 3505E Module

Note You must re-key the female connector to match its corresponding male connector on the Tricon chassis. For instructions on re-keying connectors, see Appendix A, Re-Keying Connectors.

Simplified Schematics

This is a simplified schematic of a typical 32-point digital input module without self test connected to a fanned-out cable (1 of 32 module points shown).

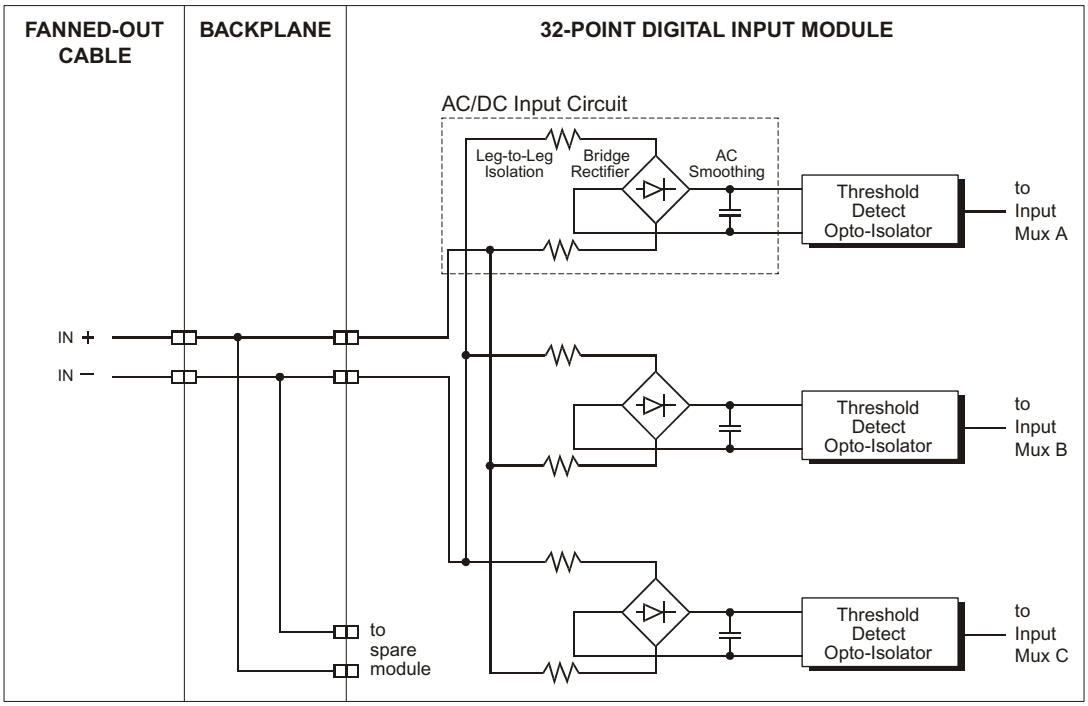

Figure 254 Simplified Schematic of a 3501E or 3501T DI Module with a Fanned-Out Cable

This is a simplified schematic of a typical 32-point digital input module with self test connected to a fanned-out cable (1 of 32 module points shown).

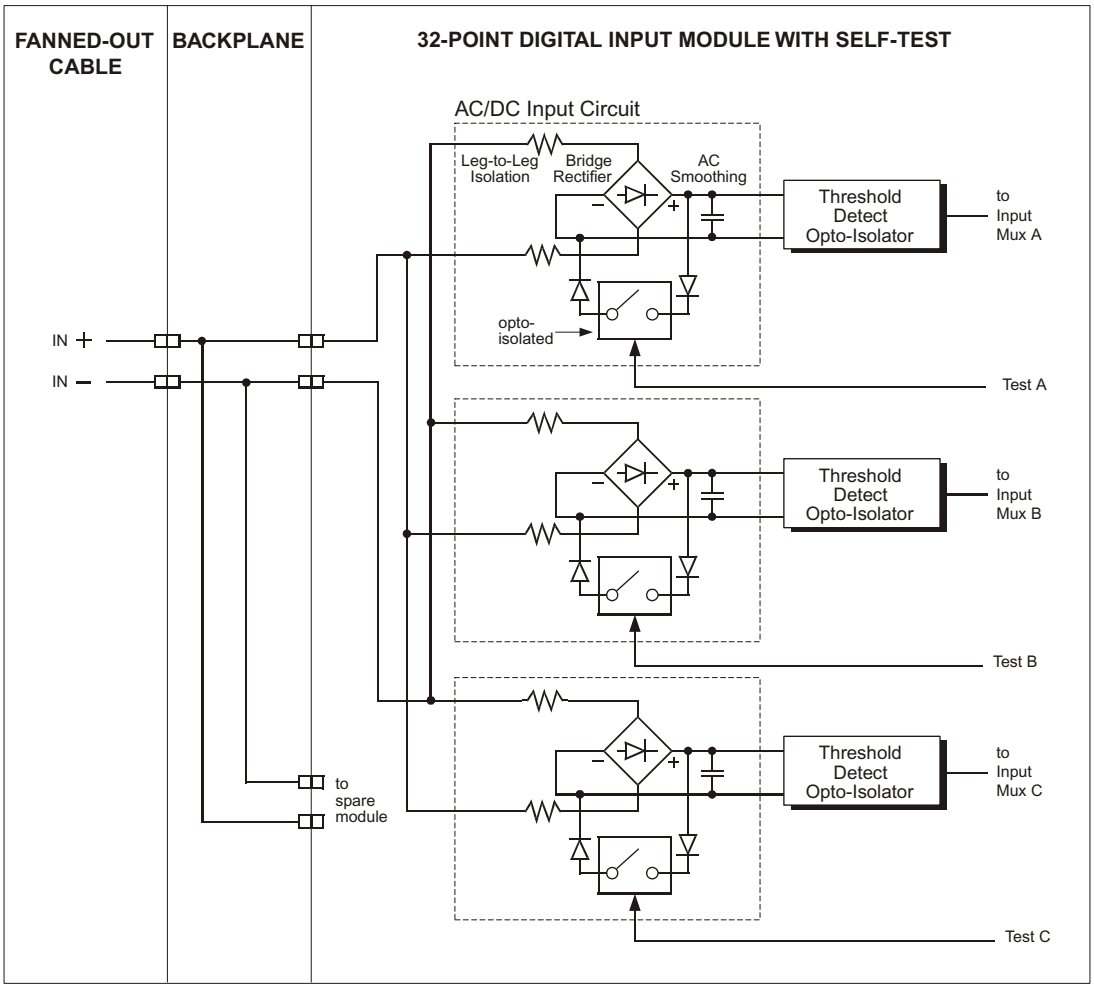

Figure 255 Simplified Schematic of a 3502E, 3503E, or 3505E DI Module with a Fanned-Out Cable

Connecting 64-Point Digital Input Modules to Fanned-Out Cables

This table describes the 64-point digital input module that is compatible with a fanned-out cable.

Table 203 64-point Digital Input Module Compatible with a Fanned-Out Cable

Module Part Number	Module Description
3564	24 VDC, commoned, single

Field Wiring Diagrams

This figure illustrates how to connect field wiring to a 64-point digital input module using a fanned-out cable.

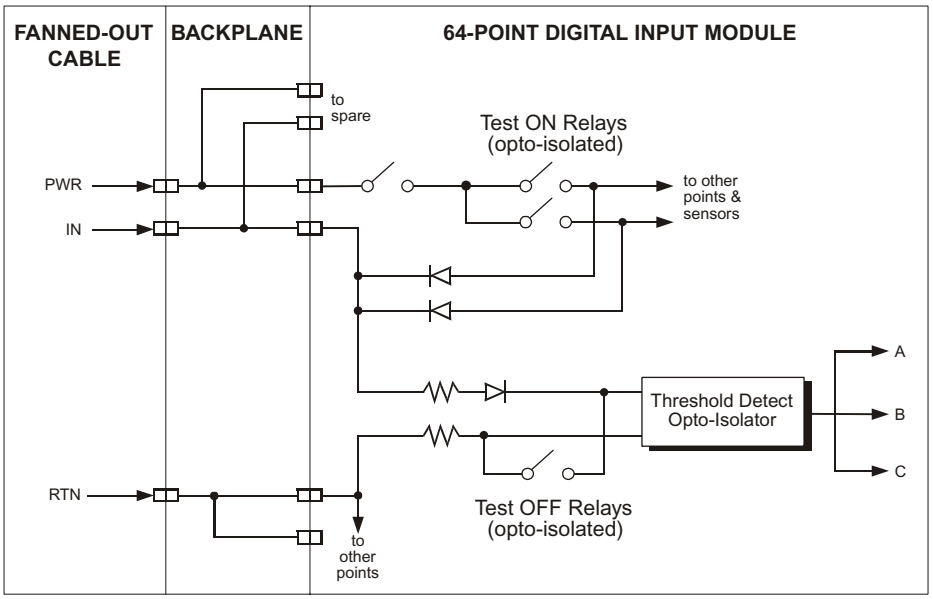

Figure 256 Field Wiring for 9101-010 with a 3564 Module

Note You must re-key the female connector to match its corresponding male connector on the Tricon chassis. For instructions on re-keying connectors, see Appendix A, Re-Keying Connectors.

Simplified Schematics

This is a simplified schematic of a typical 64-point digital input module connected to a fanned-out cable (1 of 64 module points shown).

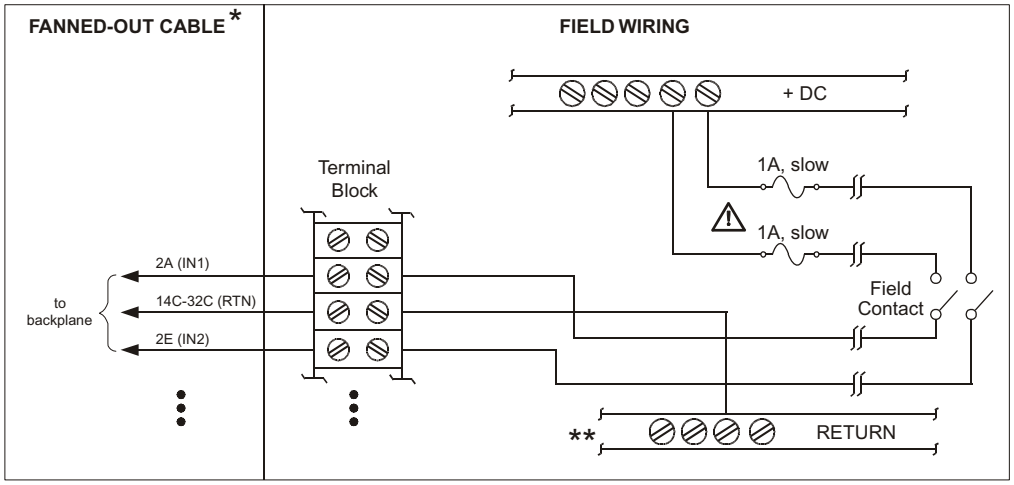

* Two cables are required for 64 points.

** Only one RTN connection is required for proper operation of a 64-point digital input module.

Figure 257 Simplified Schematic of a 3564 DI Module with a Fanned-Out Cable

Fanned-Out Cables with Digital Output Modules

This section contains simplified schematics and wiring diagrams for connecting digital output modules to fanned-out cables.

Topics include:

- Connecting 16-Point Digital Output Modules to Fanned-Out Cables on page 335
- Connecting 32-Point Digital Output Modules to Fanned-Out Cables on page 341
- Connecting 32-Point Relay Output Modules to Fanned-Out Cables on page 344

Connecting 16-Point Digital Output Modules to Fanned-Out Cables

This table describes 16-point digital output modules that are compatible with a fanned-out cable.

Table 204 16-point Digital Output Modules Compatible with a Fanned-Out Cable

Module Part Number	Module Description
3601E	115 VAC, non-commoned, opto-isolated, TMR
3603E	120 VDC, commoned, opto-isolated, TMR
3604E	24 VDC, non-commoned, opto-isolated, TMR
3607E	48 VDC, non-commoned, TMR
3623	120 VDC, commoned, supervised, opto-isolated, TMR
3624	24 VDC, commoned, supervised, opto-isolated, self-protected, TMR

Note You must re-key the female connector on each fanned-out cable to match the corresponding male connector on the Tricon backplane. Male connectors are mounted on the backplane directly above their respective I/O slots. For instructions on re-keying connectors, see Appendix A, Re-Keying Connectors.

Field Wiring Diagrams

This figure illustrates how to connect field wiring to a 16-point digital output module using a fanned-out cable.

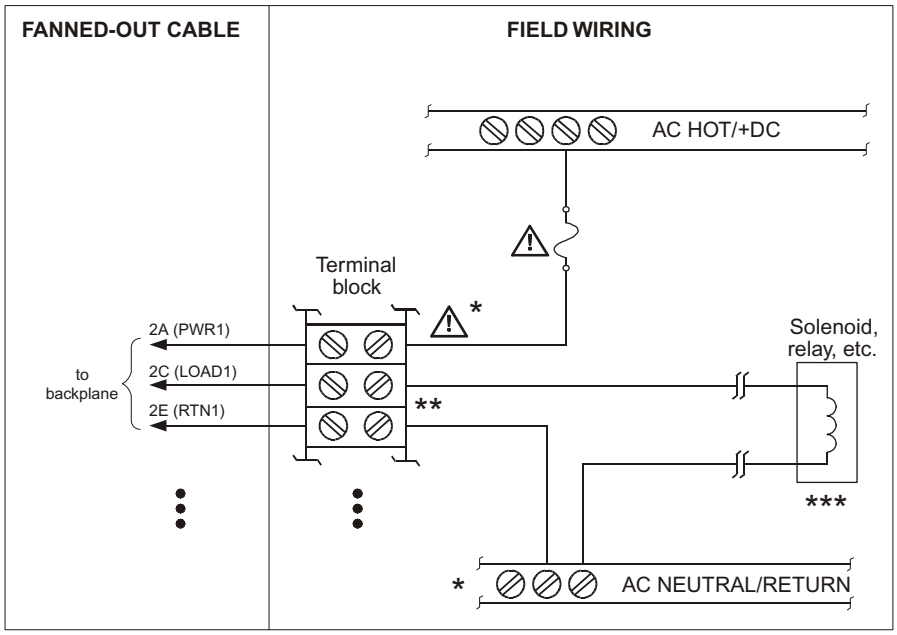

* For all unused points, PWR and RTN must be connected.

** For all modules, one RTN per point is required.

*** To prevent missing-load alarm, install a load at each unused point.

Figure 258 Field Wiring for 9101-010 with a 3601E, 3603E, 3604E, 3607E, or 3623 Module

CAUTION For proper operation, one PWR connection per point is required.

This figure illustrates how to connect field wiring to a 16-point commoned digital output module with self-protection using a fanned-out cable.

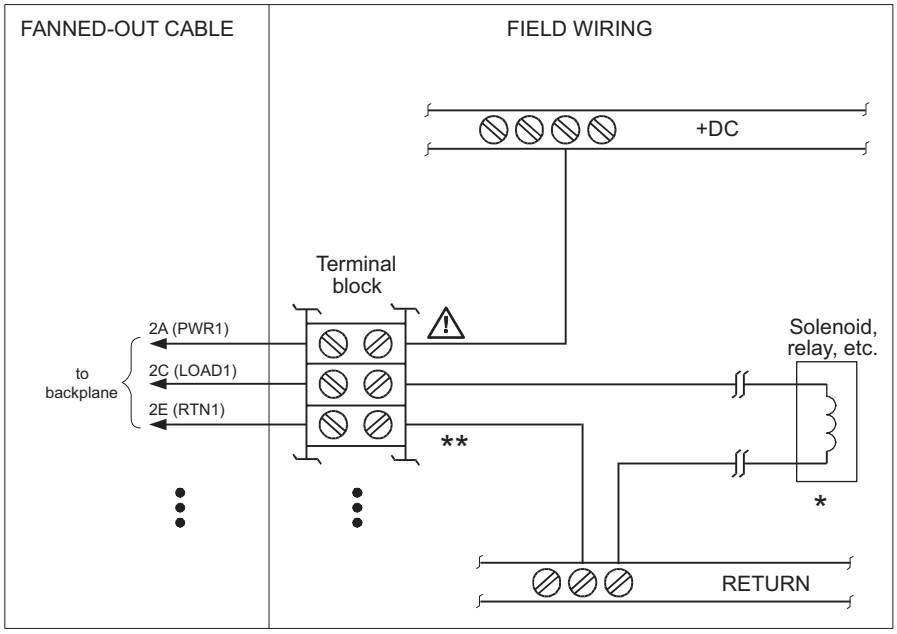

* To prevent missing-load alarm, install a load at each unused point. If a field load is not available, install a 470-Ohm, 10-W resistor.

** One RTN connection per point is required.

Figure 259 Field Wiring for 9101-010 with a 3624 Module

CAUTION For proper operation, one RTN connection and one PWR connection per point are required.

Note You must re-key the female connector to match its corresponding male connector on the Tricon chassis. For instructions on re-keying connectors, see Appendix A, Re-Keying Connectors.

Simplified Schematics

This is a simplified schematic of a typical 16-point commoned digital output module connected to a fanned-out cable (1 of 16 module points shown).

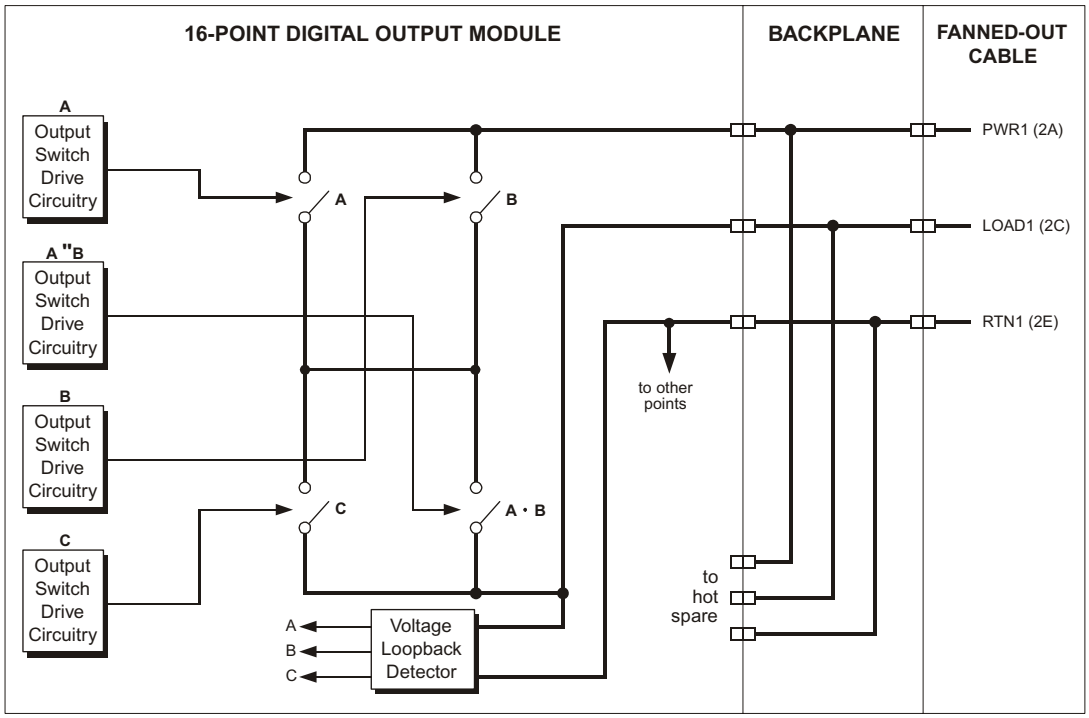

Figure 260 Simplified Schematic of a 3603E DO Module with a Fanned-Out Cable

This is a simplified schematic of a typical 16-point non-commoned digital output module connected to a fanned-out cable (1 of 16 module points shown).

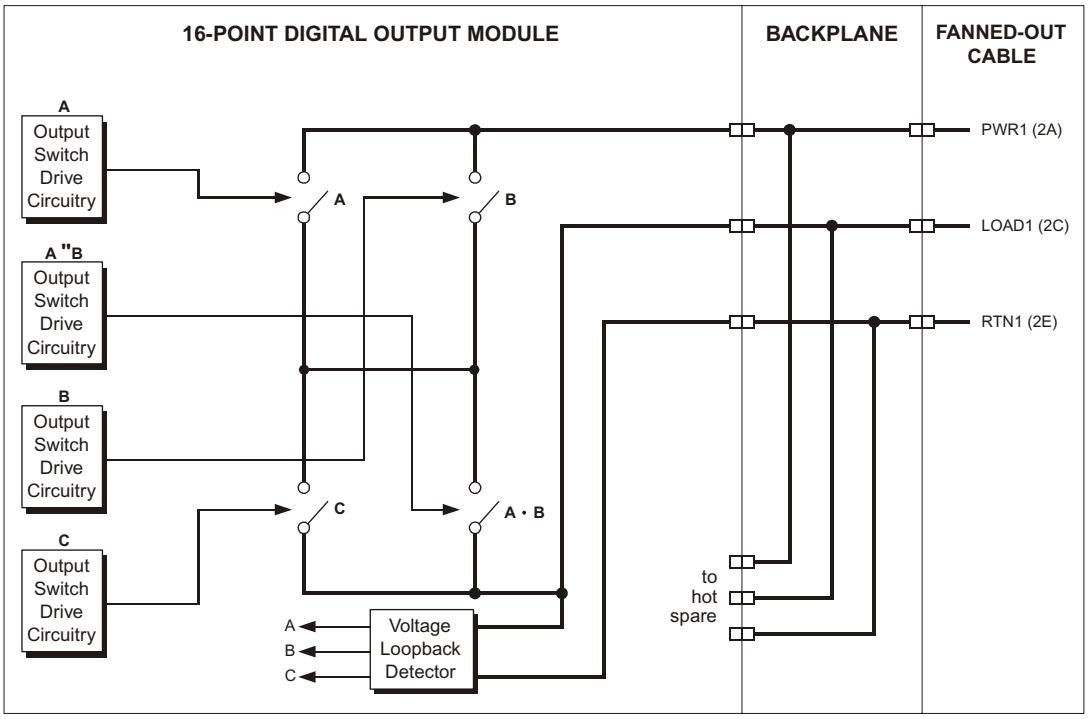

Figure 261 Simplified Schematic of a 3601E, 3604E, or 3607E DO Module with a Fanned-Out Cable

This is a simplified schematic of a typical 16-point commoned supervised digital output module connected to a fanned-out cable (1 of 16 module points shown).

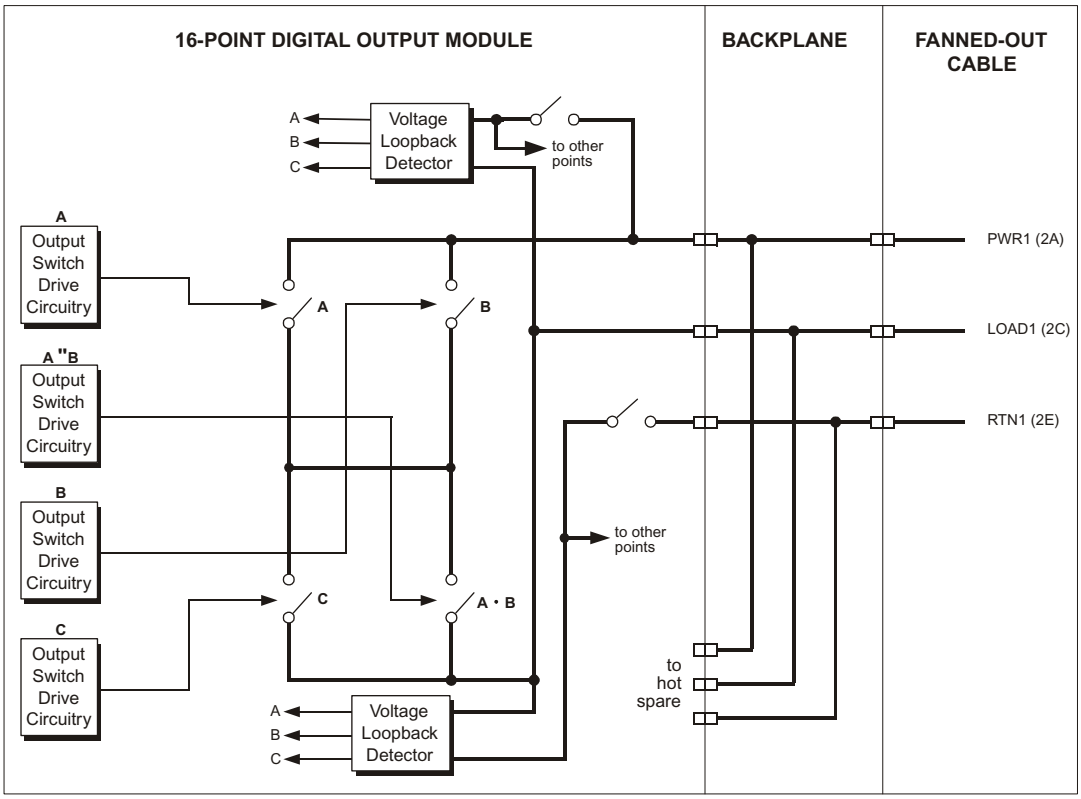

Figure 262 Simplified Schematic of a 3623 or 3624 DO Module with a Fanned-Out Cable

Connecting 32-Point Digital Output Modules to Fanned-Out Cables

This table describes 32-point digital output modules that are compatible with a fanned-out cable.

Table 205 32-point Digital Output Modules Compatible with a Fanned-Out Cable

Module Part Number	Module Description
3625	24 VDC, commoned, supervised/non-supervised, opto-isolated, self-protected, TMR
3664	24 VDC, commoned, opto-isolated, self-protected, dual
3674	24 VDC, commoned, opto-isolated, self-protected, dual

Note You must re-key the female connector on each fanned-out cable to match the corresponding male connector on the Tricon backplane. Male connectors are mounted on the backplane directly above their respective I/O slots. For instructions on re-keying connectors, see Appendix A, Re-Keying Connectors.

Field Wiring Diagrams

This figure illustrates how to connect field wiring to a 32-point commoned digital output module with self-protection using a fanned-out cable.

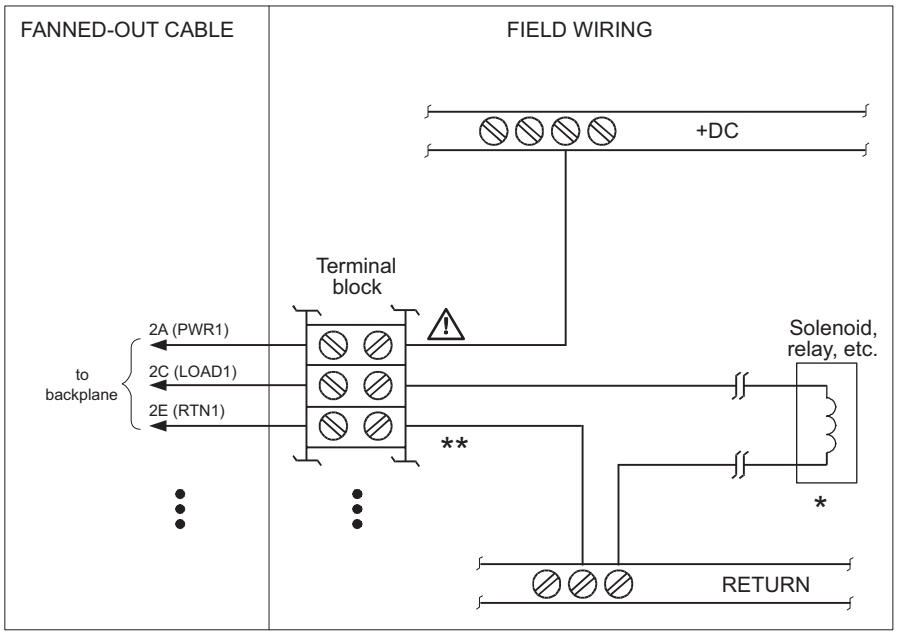

* To prevent missing-load alarm, install a load at each unused point. If a field load is not available, install a 470-Ohm, 10-W resistor.

** One RTN connection per point is required.

Figure 263 Field Wiring for 9101-010 with a 3625 Module

CAUTION For proper operation, one RTN connection and one PWR connection per point are required.

Note You must re-key the female connector to match its corresponding male connector on the Tricon chassis. For instructions on re-keying connectors, see Appendix A, Re-Keying Connectors.

This figure illustrates how to connect field wiring to a 32-point dual digital output module using a fanned-out cable.

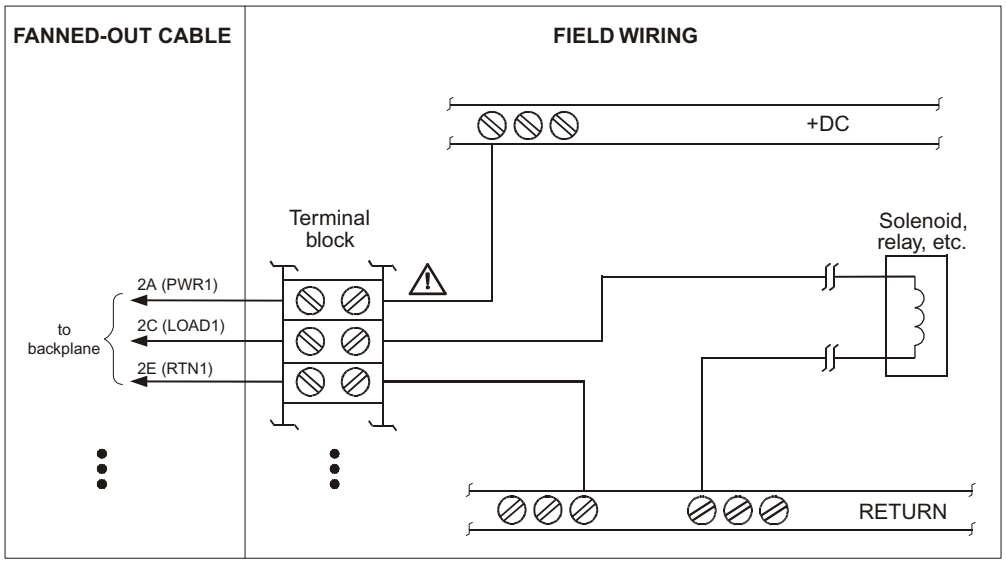

Figure 264 Field Wiring for 9101-010 with a 3664 or 3674 Module

Note You must re-key the female connector to match its corresponding male connector on the Tricon chassis. For instructions on re-keying connectors, see Appendix A, Re-Keying Connectors.

Simplified Schematics

This is a simplified schematic of a typical 32-point digital output module connected to a fanned-out cable (1 of 32 module points shown).

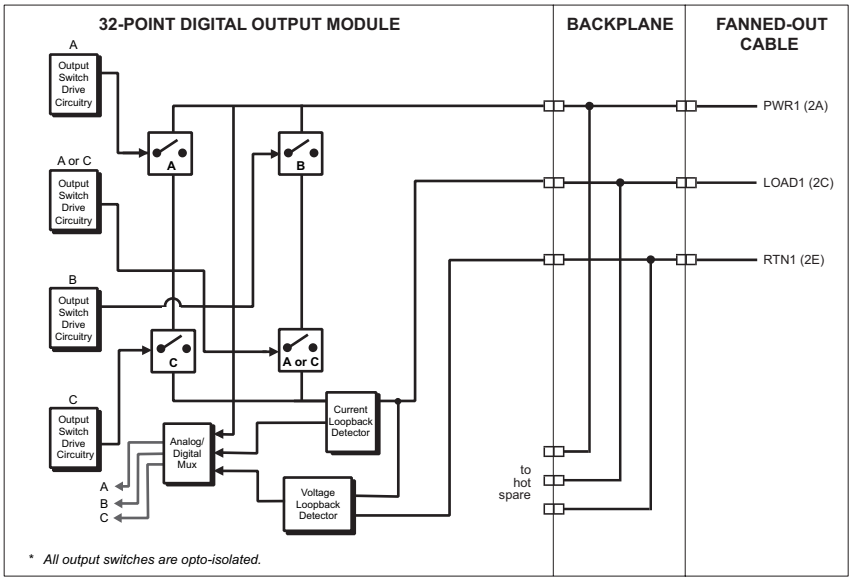

Figure 265 Simplified Schematic of a 3625 DO Module with a Fanned-Out Cable

This is a simplified schematic of a typical 32-point dual digital output module connected to a fanned-out cable (1 of 32 module points shown).

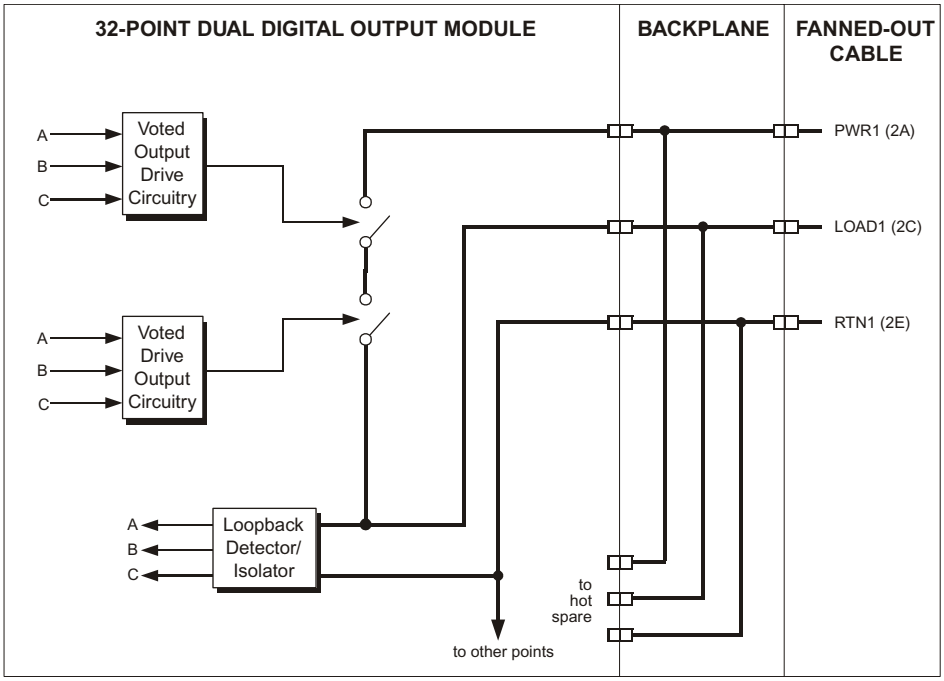

Figure 266 Simplified Schematic of a 3664 or 3674 DO Module with a Fanned-Out Cable

Connecting 32-Point Relay Output Modules to Fanned-Out Cables

This table describes 32-point relay output modules that are compatible with a fanned-out cable.

Table 206 32-point Relay Output Modules Compatible with a Fanned-Out Cable

Module Part Number	Module Description
3636R	Non- commoned, simplex, galvanically-isolated, normally open
3636T	Non- commoned, simplex, galvanically-isolated, normally open

Note You must re-key the female connector on each fanned-out cable to match the corresponding male connector on the Tricon backplane. Male connectors are mounted on the backplane directly above their respective I/O slots. For instructions on re-keying connectors, see Appendix A, Re-Keying Connectors.

Field Wiring Diagrams

This figure illustrates how to connect field wiring to a 32-point relay output module using a fanned-out cable.

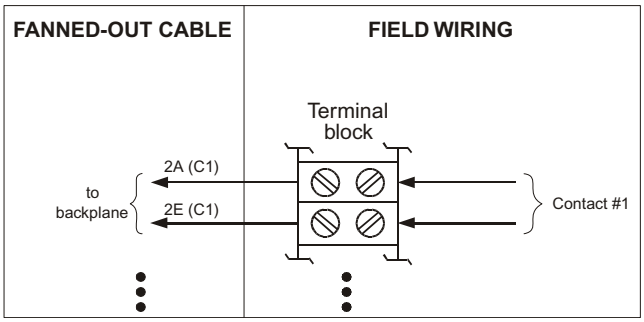

Figure 267 Field Wiring for 9101-010 with a 3636R or 3636T Module

Note You must re-key the female connector to match its corresponding male connector on the Tricon chassis. For instructions on re-keying connectors, see Appendix A, Re-Keying Connectors.

Simplified Schematics

This is a simplified schematic of a typical 32-point relay output module connected to a fanned-out cable (1 of 32 module points shown).

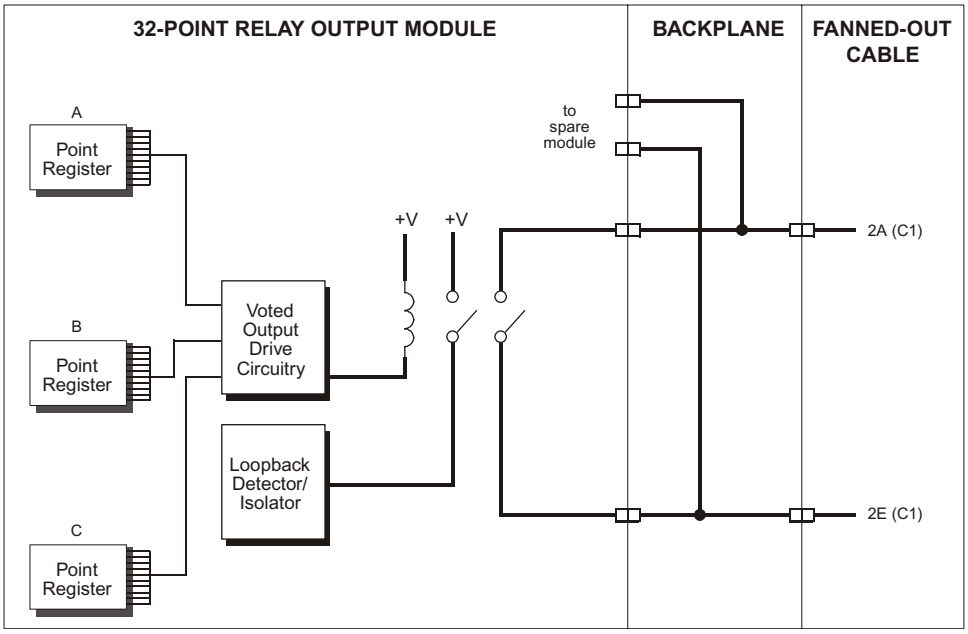

Figure 268 Simplified Schematic of a 3636R or 3636T Relay Output Module with a Fanned-Out Cable

A

Re-Keying Connectors

Re-Configuring a System 348
I/O Connector Key Positions 349
Re-Keying a Connector 353
Re-Keying a Fanned-Out Cable 354

Re-Configuring a System

The purpose of keying connectors by module type and voltage is to protect modules from inadvertent connection to inappropriate voltages. Termination panels are also keyed. If you use a fanned-out cable, you must key its connector according to this appendix to ensure module protection. This appendix provides instructions for re-keying the field interface connectors and fanned-out cables only. For instructions on repositioning slot keys, see the *Planning and Installation Guide for Tricon v9–v10 Systems*.

To re-configure an existing system:

Procedure

1. Reposition the slot's top and bottom keys.
2. Re-key the corresponding male connector on the backplane.
3. Install a replacement for the termination assembly, or re-key the female connector on the fanned-out cable.

To re-configure an existing system without rear access:

Procedure

1. Reposition the slot's top and bottom keys.
2. Re-key the female connector on the cable to match the backplane connector. All unused slots are delivered from the factory keyed Small=1, Large=1.
3. Mark cable as being modified.
4. Install new or replacement termination assembly.

I/O Connector Key Positions

Each male and female connector has two keys: a large key, and a small key. Each key has a total of six possible positions. These tables show the key positions required by each module and termination assembly combination.

Table 207 Digital Input Panel Key Positions

Termination panel	Rating	Module	Small key	Large key
9551-110	115 VAC	3501E 3501T	1	1
9552-610	48 VAC/VDC	3502E	1	2
9553-610	24 VAC/VDC	3503E 3505E	1	3
9553-610	24 VDC	3564	1	3
9750-310	24 VDC non-isolated	3504E	1	3
9750-410	48 VDC non-isolated	3504E	1	2
9561-110	115 VAC	3501E 3501T	1	1
9561-810	115 VAC	3501E 3501T	1	1
9562-810	48 VAC/VDC	3502E	1	2
9563-810	24 VAC/VDC	3503E 3505E	1	3
9565-810	48 VDC	3504E	1	2
9566-710	24 VDC	3564	1	3
9566-810	24 VDC	3504E	1	3
9141-010	115 VA /120 VDC	9670-110 9670-610 9673-810	1	1
9142-010	48 VDC	9672-810	1	2
9143-010	24 VDC	9671-810	1	3

Table 208 Digital Output Panel Key Positions

Termination panel	Rating	Module	Small key	Large key
9651-110	115 VAC	3601E 3601T	3	1
9651-110	115 VAC	3623 3623T 3603E 3603T	3	1
9652-610	48 VDC	3607E	3	2
9653-610	24 VDC	3604E 3624 3664	3	3
9661-110	115 VAC	3601E 3601T	3	1
9661-510	115 VAC	3611E	3	1
9661-610	115 VAC	3601E 3601T	3	1
9661-710	120 VDC	3663	3	1
9661-810	120 VDC	3613E	3	1
9251-210	120 VDC	3603B	see note	1
9661-910	120 VDC	3603E 3623 3623T	3	1
9662-110	24 VDC	3604E	3	3
9662-610	24 VDC	3624 3664 3674	3	3
9662-710	24 VDC	3615E	3	3
9662-810	24 VDC	3604E	3	3
9662-910	24 VDC	3614E	3	3
9667-110	48 VDC	3607E	3	2
9667-610	48 VDC	3627 3627T	3	2
9667-810	48 VDC	3607E	3	2
9667-910	48 VDC	3617E	3	2

Note Regarding termination panel 9251-210: for the termination panel and the end of the cable that connects to the termination panel, the keying is Large=1, Small=1. For the chassis and the end of the cable that connects to the chassis, the keying is Large =1, Small=3.

Table 209 Pulse Input Panel Key Positions

Termination panel	Rating	Module	Small key	Large key
9753-110	Pulse	3510 3511	1	5

Table 210 Relay Output Panel Key Positions

Termination panel	Rating	Module	Small key	Large key
9668-110	Relay	3636R 3636T	3	1
9651-110	Relay	3636R 3636T	3	1

Table 211 Analog Input Panel Key Positions

Termination panel	Rating	Module	Small key	Large key
9750-210	4–20 mA (5 VDC)	3704E	1	5
9750-810	0–5/0–10 VDC	3704E	1	5
9753-110	0–5/0–10 VDC	3700A 3701 3703E	1	5
9761-210	4–20 mA (5 VDC)	3700	1	5
9761-410	4–20 mA (10 VDC)	3701	1	5
9763-810	0–5/0–10 VDC	3700 3701	1	5
9762-210	4–20 mA (5 VDC)	3703E	1	5
9762-410	4–20 mA (10 VDC)	3703E	1	5
9763-810	0–5/0–10 VDC	3703E	1	5
9765-610	Thermocouple	3708E	1	5
9766-210	Thermocouple	3706A	1	5
9766-510	Thermocouple	3706A	1	5
9760-210	4–20 mA (5 VDC)	3704E	1	5
9760-410	4–20 mA (10 VDC)	3704E	1	5
9765-210	4–20 mA (5 VDC)	3704E	1	5

Table 212 Analog Output Panel Key Positions

Termination panel	Rating	Module	Small key	Large key
9853-610	4–20 mA	3805E/H	3	5
9863-710	4–20 mA 20–320 mA	3806E	3	5

Table 213 Relay Output Panel Key Positions

Termination panel	Rating	Module	Small key	Large key
9670-110	115 VAC	3601E 3601T	3[1]	1
9670-610	115 VAC	3601E	3[1]	1
9671-810	24 VDC	3604E 3664 3674	3[1]	3
9672-810	48 VDC	3607E 3607T	3[1]	2
9673-810	120 VDC	3603E 3603T	3[1]	1

1. Small key is “1” at term panel end of cable.

Table 214 Bypass Panel Key Positions

Termination panel	Rating	Module	Small key	Large key
BP9228-010	Bypass	3503E 3505E	1	3

Table 215 RTD Panel Key Positions

Termination panel	Rating	Module	Small key	Large key
9764-310	RTD	3700 3700A	1	5

Re-Keying a Connector

This procedure explains how to re-key a connector on the Tricon backplane.

CAUTION If a Tricon system includes 115V modules, a high-voltage potential exists on the backplane. To avoid shorts that could lead to damage, Triconex recommends removing all power from the Tricon system before you re-key the backplane connectors.

Procedure

1. Remove the eight screws that hold the Tricon chassis backplane cover, then remove the cover.
2. Insert nut driver (part #2000236-001) through the backplane opening and loosen the nut on the large male key.
3. While you hold the nut in place with the nut driver, remove the large male key (cylindrical in shape) and reposition it to the correct number for your new module. See diagram below.
4. Tighten the nut for the large male key.
5. Insert nut driver through the backplane opening and loosen the nut on the small male key.
6. While you hold the nut in place with the nut driver, remove the small male key (cylindrical in shape) and reposition it to the correct number for your new module. See diagram below.
7. Tighten the nut for the small male key.
8. Replace the backplane cover and eight screws.

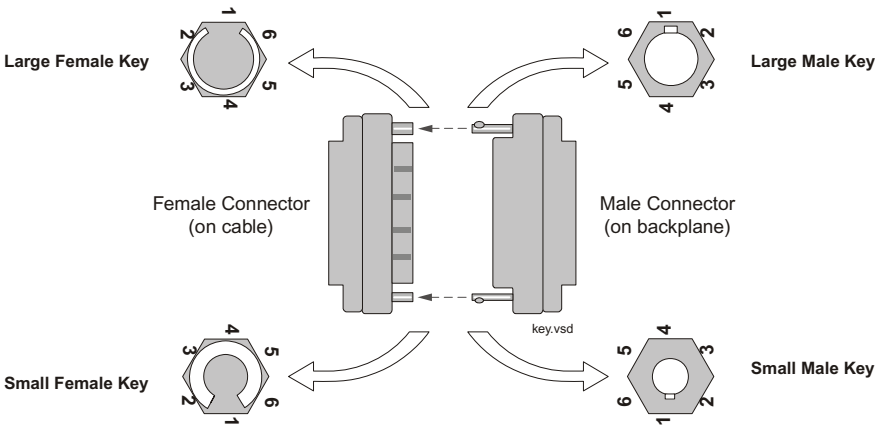

Note Keys are shown in their default position (1), which is also the position for 115 VAC digital input terminations.

Re-Keying a Fanned-Out Cable

This procedure explains how to re-key a fanned-out cable.

All fanned-out cables are factory-keyed for position 1. Therefore you must always re-key a fanned-out cable to match an I/O module in your system when you first install a system.

You must also re-key a fanned-out cable if you add new module types to your system. If you move an existing I/O module to a different slot, you don't need to re-key the cable if you move the same cable with the modules.

Procedure

1. Hold the connector in your hand, and loosen (but do not remove the two screws that secure the cable clamp).
2. Remove the four screws on the connector that fasten it to the housing.
3. Pull the connector away from the housing and rotate the connector slightly to expose the keying nuts.
4. Loosen the nut on the large hexagonal key using the nut driver (part #2000236-001).
5. While holding the nut in place with the nut driver, remove the large key and reposition it to the correct number.
6. Tighten the large key nut.
7. Loosen the nut on the small hexagonal key.
8. While holding the nut in place with the nut driver, remove the small key and reposition it to the correct number.
9. Tighten the small key nut.
10. Replace the female connector in its housing by lining up the thumbscrew with the opening in the top of the housing.
11. Replace the four screws that secure the female connector to the housing.
12. Tighten the two screws that secure the housing to the cable.

B

Fanned-Out Cable Pinouts

Signal Names 356
Connector #1 357
Connector #2 359

Signal Names

This table provides a list of signal names and pin numbers that you need to know when connecting fanned-out cables and basic termination panels. The signal names in the table match the labels on a fanned-out cable. The pin numbers in the table match the pin numbers on the connector for the fanned-out cable as well as the panel connector on the Tricon backplane.

The signal names depend on which backplane connector the fanned-out cable is attached to, as shown next.

Table 216 Pin Number Assignment

Total points	Connector #1	Connector #2
16	1–16	n/a
32	1–16	17–32
64	1–32	33–64

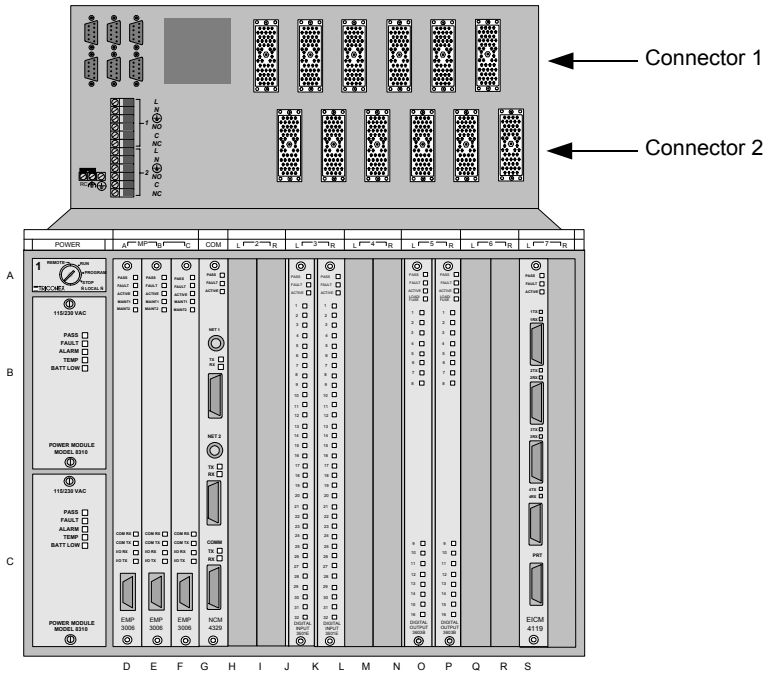

Connector #1

Table 217 Connector Number 1 Pinouts

Connector #1		I/O Modules								
Signal Label	Pin #	64 Pt SDI	64 Pt AI/DI	32 Pt DI	DO/ 16 Pt SDO	8 Pt SDO	RO	AI/TC	AO	PI
2A	AA	IN1	IN1	IN1+	PWR1	PWR1	C1	IN1+	OUT1	IN1+
2C	KK	*	*		LOAD1	LOAD1		*		
2E	LL	IN2	IN2	IN1–	RTN1	RTN1	C1	IN1–	RTN1	IN1–
4A	z	IN3	IN3	IN2+	PWR2	PWR2	C2	IN2+	OUT2	IN2+
4C	DD	PWR	PWR		LOAD2	LOAD2		*		
4E	EE	IN4	IN4	IN2–	RTN2	RTN2	C2	IN2–	RTN2	IN2–
6A	p	IN5	IN5	IN3+	PWR3	PWR3	C3	IN3+	OUT3	IN3+
6C	u	*	*		LOAD3	LOAD3		*		
6E	v	IN6	IN6	IN3–	RTN3	RTN3	C3	IN3–	RTN3	IN3–
8A	h	IN7	IN7	IN4+	PWR4	PWR4	C4	IN4+	OUT4	IN4+
8C	k	PWR	PWR		LOAD4	LOAD4		*		
8E	l	IN8	IN8	IN4–	RTN4	RTN4	C4	IN4–	RTN4	IN4–
10A	e	IN9	IN9	IN5+	PWR5	PWR5	C5	IN5+	OUT5	IN5+
10C	a	*	*		LOAD5	LOAD5		*		
10E	b	IN10	IN10	IN5–	RTN5	RTN5	C5	IN5–	RTN5	IN5–
12A	W	IN11	IN11	IN6+	PWR6	PWR6	C6	IN6+	OUT6	IN6+
12C	R	PWR	PWR		LOAD6	LOAD6		*		
12E	S	IN12	IN12	IN6–	RTN6	RTN6	C6	IN6–	RTN6	IN6–
14A	L	IN13	IN13	IN7+	PWR7	PWR7	C7	IN7+	OUT7	IN7+
14C	E	RTN	RTN		LOAD7	LOAD7				
14E	F	IN14	IN14	IN7–	RTN7	RTN	C7	IN7–	RTN7	IN7–
16A	M	IN15	IN15	IN8+	PWR8	PWR8	C8	IN8+	OUT8	IN8+
16C	A	RTN	RTN		LOAD8	LOAD8				
16E	B	IN16	IN16	IN8–	RTN8	RTN	C8	IN8–	RTN8	IN8–
18A	BB	IN17	IN17	IN9+	PWR9	SEC1	C9	IN9+		*
18C	NN	RTN	RTN		LOAD9					*
18E	MM	IN18	IN18	IN9–	RTN9	RTN	C9	IN9–		*
20A	CC	IN19	IN19	IN10+	PWR10	SEC2	C10	IN10+		*
20C	JJ	RTN	RTN		LOAD10					*

Table 217 Connector Number 1 Pinouts *(continued)*

Connector #1		I/O Modules								
Signal Label	Pin #	64 Pt SDI	64 Pt AI/DI	32 Pt DI	DO/ 16 Pt SDO	8 Pt SDO	RO	AI/TC	AO	PI
20E	HH	IN20	IN20	IN10–	RTN10	RTN	C10	IN10–		*
22A	t	IN21	IN21	IN11+	PWR11	SEC3	C11	IN11+	PWRA	*
22C	y	RTN	RTN		LOAD11					*
22E	x	IN22	IN22	IN11–	RTN11	RTN	C11	IN11–	RTN	*
24A	j	IN23	IN23	IN12+	PWR12	SEC4	C12	IN12+	PWRB	*
24C	n	RTN	RTN		LOAD12					*
24E	m	IN24	IN24	IN12–	RTN12	RTN	C12	IN12–	RTN	*
26A	f	IN25	IN25	IN13+	PWR13	SEC5	C13	IN13+		*
26C	d	RTN	RTN		LOAD13					*
26E	c	IN26	IN26	IN13–	RTN13	RTN	C13	IN13–		*
28A	Z	IN27	IN27	IN14+	PWR14	SEC6	C14	IN14+		*
28C	V	RTN	RTN		LOAD14					*
28E	U	IN28	IN28	IN14–	RTN14	RTN	C14	IN14–		*
30A	P	IN29	IN29	IN15+	PWR15	SEC7	C15	IN15+		*
30C	K	RTN	RTN		LOAD15					*
30E	J	IN30	IN30	IN15–	RTN15	RTN	C15	IN15–		*
32A	N	IN31	IN31	IN16+	PWR16	SEC8	C16	IN16+		*
32C	D	RTN	RTN		LOAD16					*
32E	C	IN32	IN32	IN16–	RTN16	RTN	C16	IN16–		*
34A	T	CGND	CGND	CGND	CGND	CGND	CGND	CGND	CGND	CGND
34C	H	CGND	CGND	CGND	CGND	CGND	CGND	CGND	CGND	CGND
34E	w	CGND	CGND	CGND	CGND	CGND	CGND	CGND	CGND	CGND
36A	FF	CGND	CGND	CGND	CGND	CGND	CGND	CGND	CGND	CGND

* Reserved for Tricon internal use. Do not connect for any purpose.

Note CGND is the Tricon chassis ground (protective earth). Pins r, s, X and Y on the panel connector are not used.

Connector #2

Table 218 Connector Number 2 Pinouts

Connector #2		I/O Modules				
Signal Label	Pin #	64 Pt SDI	64 Pt AI/DI	32 Pt AI/DI	DO	RO
2A	AA	IN33	IN33	IN17+	PWR17	C17
2C	KK		RTN		LOAD17	
2E	LL	IN34	IN34	IN17–	RTN17	C17
4A	z	IN35	IN35	IN18+	PWR18	C18
4C	DD	PWR	RTN		LOAD18	
4E	EE	IN36	IN36	IN18–	RTN18	C18
6A	p	IN37	IN37	IN19+	PWR19	C19
6C	u		RTN		LOAD19	
6E	v	IN38	IN38	IN19–	RTN19	C19
8A	h	IN39	IN39	IN20+	PWR20	C20
8C	k	PWR	RTN		LOAD20	
8E	l	IN40	IN40	IN20–	RTN20	C20
10A	e	IN41	IN41	IN21+	PWR21	C21
10C	a		RTN		LOAD21	
10E	b	IN42	IN42	IN21–	RTN21	C21
12A	W	IN43	IN43	IN22+	PWR22	C22
12C	R	PWR	RTN		LOAD22	
12E	S	IN44	IN44	IN22–	RTN22	C22
14A	L	IN45	IN45	IN23+	PWR23	C23
14C	E	RTN	RTN		LOAD23	
14E	F	IN46	IN46	IN23–	RTN23	C23
16A	M	IN47	IN47	IN24+	PWR24	C24
16C	A	RTN	RTN		LOAD24	
16E	B	IN48	IN48	IN24–	RTN24	C24
18A	BB	IN49	IN49	IN25+	PWR25	C25
18C	NN	RTN	RTN		LOAD25	
18E	MM	IN50	IN50	IN25–	RTN25	C25
20A	CC	IN51	IN51	IN26+	PWR26	C26
20C	JJ	RTN	RTN		LOAD26	

Table 218 Connector Number 2 Pinouts *(continued)*

Connector #2		I/O Modules				
Signal Label	Pin #	64 Pt SDI	64 Pt AI/DI	32 Pt AI/DI	DO	RO
20E	HH	IN52	IN52	IN26–	RTN26	C26
22A	t	IN53	IN53	IN27+	PWR27	C27
22C	y	RTN	RTN		LOAD27	
22E	x	IN54	IN54	IN27–	RTN27	C27
24A	j	IN55	IN55	IN28+	PWR28	C28
24C	n	RTN	RTN		LOAD28	
24E	m	IN56	IN56	IN28–	RTN28	C28
26A	f	IN57	IN57	IN29+	PWR29	C29
26C	d	RTN	RTN		LOAD29	
26E	c	IN58	IN58	IN29–	RTN29	C29
28A	Z	IN59	IN59	IN30+	PWR30	C30
28C	V	RTN	RTN		LOAD30	
28E	U	IN60	IN60	IN30–	RTN30	C30
30A	P	IN61	IN61	IN31+	PWR31	C31
30C	K	RTN	RTN		LOAD31	
30E	J	IN62	IN62	IN31–	RTN31	C31
32A	N	IN63	IN63	IN32+	PWR32	C32
32C	D	RTN	RTN		LOAD32	
32E	C	IN64	IN64	IN32–	RTN32	C32
34A	T	CGND	CGND	CGND	CGND	CGND
34C	H	CGND	CGND	CGND	CGND	CGND
34E	w	CGND	CGND	CGND	CGND	CGND
36A	FF	CGND	CGND	CGND	CGND	CGND

Note CGND is the Tricon chassis ground (protective earth). Pins r, s, X and Y on the panel connector are not used.

C

Recommended Replacement Parts

This table contains recommended parts that can be used to replace existing Tricon parts, or customize a Tricon system.

Table 219 Recommended Replacement Parts

Part Description	Manufacturer Part No.	Manufacturer	Triconex Part No.	Triconex Models
Lithium battery, C-size, 3.6 VDC	1400010-001	Triconex	1400010-001	Main chassis
15-amp time-delay fuse, 1/4 in x 1-1/4 in	326015 MDA-15 3W015	Littlefuse Bussman Bel Fuse	1410015-001	24 VDC power supplies
5-amp time-delay fuse, 1/4 in x 1-1/4 in	326 005 MDA-5 3S350	Littlefuse Bussman Bel Fuse	1410039-001	115 VAC/VDC power supplies
2.5-amp time-delay fuse, 1/4 in x 1-1/4 in	326 02.5 MDA-2 1/2 3SB2.5	Littlefuse Bussman Bel Fuse	1410040-001	230 VAC power supplies
3-amp fast-acting fuse, 5 mm x 20 mm	235003 GMA-3A 5MF3	Littlefuse Bussman Bel Fuse	1410003-001	Digital output termination panels
2.5-amp fast-acting fuse, 5 mm x 20 mm	23502.5 GMA-2.5A 5MF 2.5	Littlefuse Bussman Bel Fuse	1410022-001	Digital output and relay output termination panels
2-amp fast-acting fuse, 5 mm x 20 mm	235002 GMA-2A 5MF2	Littlefuse Bussman Bel Fuse	1410009-001	Relay output termination panels
2-amp fuse, 1/4 in x 1-1/4 in	312002 3AG2	Littlefuse Bel Fuse	1410020-001	Bypass panel

Table 219 Recommended Replacement Parts *(continued)*

Part Description	Manufacturer Part No.	Manufacturer	Triconex Part No.	Triconex Models
1.25-amp fast-acting fuse, 5 mm x 20 mm	2351.25 GMA-1.25A 5MF1.25	Littlefuse Bussman Bel Fuse	1410023-001	Digital output termination panels
1-amp fast-acting fuse, 5 mm x 20 mm	235001 GMA-1A 5MF1	Littlefuse Bussman Bel Fuse	1410006-001	Digital output, relay and analog input termination panels
50 mA fast-acting fuse, 5 mm x 20 mm	216.050	Littlefuse	1410019-001	Analog input terminations
50 mA fuse	273.050	Littlefuse	1410037-001	3-wire analog input
500 mA fuse	273.500	Littlefuse	1410038-001	3-wire analog input
Lithium battery	1400080-001	Triconex	1400080-001	SMM
1.0-amp time-delay fuse, 5 mm x 20 mm	239001 GMC-1A 5TT1	Littlefuse Bussman Bel Fuse	1410011-001	Digital and analog input termination panels
IC Extractor	M125B002	OK	1580009-001	All modules
Fuse Extractor Tool	M45B001 34-015	Jensen Tools Ideal	1580000-001	Terminations
Load Resistor, 2200 ohm, 10 W, 10%	CP-10-2200-10 PW-10-2200-10 SQP-10-2200-10	Dale IRC, RCD RF	1100280-001	Supervised digital output termination panels
Load Resistor, 470 ohm, 10 W, 10%	CP-10-470-10 PW-10-470-10 SQP-10-470-10	Dale IRC, RCD RF	1100281-001	Supervised digital output termination panels
Load Resistor, 120 ohm, 10 W, 10%	CP-10-120-10 PW-10-120-10 SQP-10-120-10	Dale IRC, RCD RF	1100282-001	Supervised digital output termination panels
I-to-V Resistor, 250 ohm, 0.6 W, 0.01%	S102C 250 .010% PF2260H 250 ohm .01% WAC250R00T	Vishay Riedon Wilbrecht Electronics Inc.	1100375-001	V9 analog termination panels

Table 219 Recommended Replacement Parts *(continued)*

Part Description	Manufacturer Part No.	Manufacturer	Triconex Part No.	Triconex Models
I-to-V Resistor, 500 ohm, 0.6 W, 0.01%	S102C 500 .010% PF2260H 500 ohm .01% WAC500R00T	Vishay Riedon Wilbrecht Electronics Inc.	1100425-001	V9 analog termination panels
I-to-V Resistor, 250 ohm, 1/4 W, 0.05%	VMTB60 V4-250-5 Type 135-250-5 SM-15-250-5 UPR5063ZT250-5	Vishay Micro-Ohm Riedon Phillips	1100067-001	V6–V8 analog termination panels
I-to-V Resistor, 500 ohm, 1/4 W, 0.05%	VMTB60 V4-500-5 Type 135-250-5 SM-15-500-5 UPR5063ZT500-5	Vishay Micro-Ohm Riedon Phillips	1100174-001	V6–V8 analog termination panels
Cable assembly, Ethernet BNC, 20 feet (6 m)	1060-2	Inmac	1600010-006	ACM and NCM
Cable assembly, cable Ethernet BNC, 30 feet (9 m)	1060-3	Inmac	1600010-009	ACM and NCM
Feedthru terminator, Ethernet BNC	PE6008-50	Pasternack	n/a	ACM and NCM
Male terminator, Ethernet BNC	105000 PE6000-50	Inmac Pasternack	1600008-011	ACM and NCM
BNC T- adapter F-M-F	1051 329518 3285 31-208	Inmac Amp ITT Pomona Amphenol	1500097-001	ACM and NCM
Re-keying tool	2000236-001	Triconex	2000236-001	56-pin connectors on termination cables, panels, backplane and main chassis
Spring-loaded terminal, 16-position	18 73 34 6	Phoenix	1420045-016	All applicable V9 termination panels except basic, bypass, and interposing relay

Table 219 Recommended Replacement Parts *(continued)*

Part Description	Manufacturer Part No.	Manufacturer	Triconex Part No.	Triconex Models
Spring-loaded terminal, 12-position	18 73 30 4	Phoenix	1420045-012	All applicable V9 termination panels except basic, bypass, and interposing relay
Spring-loaded terminal, 8-position	18 73 26 5	Phoenix	1420045-008	All applicable V9 termination panels except basic, bypass, and interposing relay
ELCO connector gasket These gaskets must be replaced before the end of their 5-year lifespan.	3000793-001 (kit of 25 gaskets)	Triconex	3000793-001 (kit of 25 gaskets)	The male side of all ELCO connectors used in hazardous locations (those requiring nonincendive circuits).
Key for blank logical slot	2000508-001	Triconex	2000508-001	All chassis

D

Panel Dimensions

This figure illustrates the dimensions described in Table 220 Panel Dimensions (page 366).

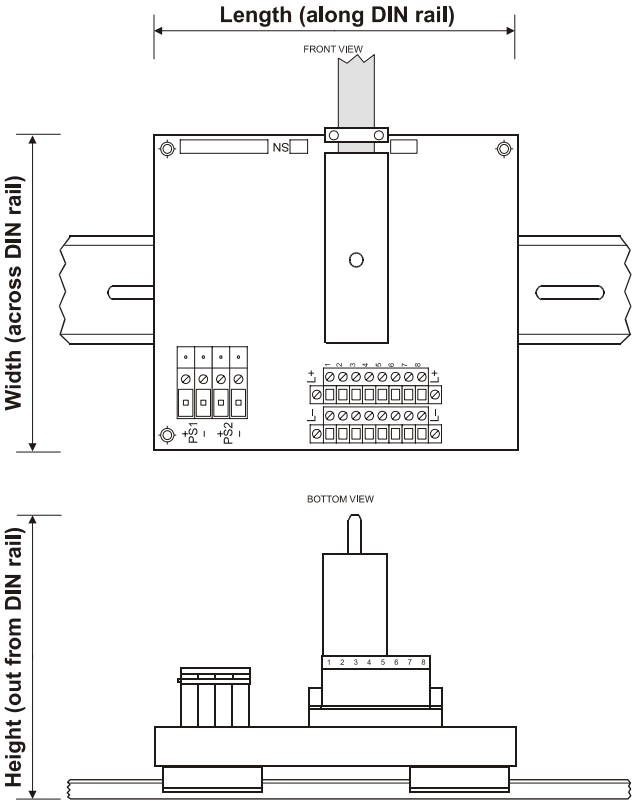

This table describes the dimensions of each external termination panel (ETP).

Table 220 Panel Dimensions

Panel Model	Width (across DIN rail)	Length (along DIN rail)	Height (out from DIN rail)
9251-210	7 in (17.78 cm)	19 in (48.26 cm)	4.75 in (12.065 cm)
9551-110	3 in (7.62 cm)	5 in (12.7 cm)	4.25 in (10.795 cm)
9552-610	3 in (7.62 cm)	5 in (12.7 cm)	4.25 in (10.795 cm)
9553-610	3 in (7.62 cm)	5 in (12.7 cm)	4.25 in (10.795 cm)
9561-110	4.5 in (11.43 cm)	7.75 in (19.685 cm)	4.25 in (10.795 cm)
9561-810	4.5 in (11.43 cm)	5 in (12.7 cm)	4.25 in (10.795 cm)
9562-810	4.5 in (11.43 cm)	5 in (12.7 cm)	4.25 in (10.795 cm)
9563-810	4.5 in (11.43 cm)	5 in (12.7 cm)	4.25 in (10.795 cm)
9563-910	4.5 in (11.43 cm)	5 in (12.7 cm)	4.25 in (10.795 cm)
9565-710	4.5 in (11.43 cm)	10 in (25.4 cm)	4.25 in (10.795 cm)
9565-810	4.5 in (11.43 cm)	10 in (25.4 cm)	4.25 in (10.795 cm)
9566-710	4.5 in (11.43 cm)	10 in (25.4 cm)	4.25 in (10.795 cm)
9566-810	4.5 in (11.43 cm)	10 in (25.4 cm)	4.25 in (10.795 cm)
9567-810	4.5 in (11.43 cm)	10 in (25.4 cm)	4.25 in (10.795 cm)
9570-610	4.42 in (11.23 cm)	9.88in (25.08 cm)	4.25 in (10.795 cm)
9571-610	4.42 in (11.23 cm)	9.88 in (25.08 cm)	4.25 in (10.795 cm)
9572-610	4.42 in (11.23 cm)	5.02 in (12.75 cm)	4.25 in (10.795 cm)
9651-110	3 in (7.62 cm)	5 in (12.7 cm)	4.25 in (10.795 cm)
9652-610	3 in (7.62 cm)	5 in (12.7 cm)	4.25 in (10.795 cm)
9653-610	3 in (7.62 cm)	5 in (12.7 cm)	4.25 in (10.795 cm)
9661-110	4.5 in (11.43 cm)	7.75 in (19.685 cm)	4.25 in (10.795 cm)
9661-510	4.5 in (11.43 cm)	5 in (12.7 cm)	4.25 in (10.795 cm)
9661-610	4.5 in (11.43 cm)	5 in (12.7 cm)	4.25 in (10.795 cm)
9661-710	4.5 in (11.43 cm)	5 in (12.7 cm)	4.25 in (10.795 cm)
9661-810	4.5 in (11.43 cm)	5 in (12.7 cm)	4.25 in (10.795 cm)
9661-910	4.5 in (11.43 cm)	5 in (12.7 cm)	4.25 in (10.795 cm)
9662-110	4.5 in (11.43 cm)	7.75 in (19.685 cm)	4.25 in (10.795 cm)
9662-610	4.5 in (11.43 cm)	5 in (12.7 cm)	4.25 in (10.795 cm)
9662-710	4.5 in (11.43 cm)	5 in (12.7 cm)	4.25 in (10.795 cm)
9662-810	4.5 in (11.43 cm)	5 in (12.7 cm)	4.25 in (10.795 cm)

Table 220 Panel Dimensions *(continued)*

Panel Model	Width (across DIN rail)	Length (along DIN rail)	Height (out from DIN rail)
9662-910	4.5 in (11.43 cm)	5 in (12.7 cm)	4.25 in (10.795 cm)
9663-610	4.5 in (11.43 cm)	7.75 in (19.685 cm)	4.25 in (10.795 cm)
9664-110	4.5 in (11.43 cm)	9.88 in (25.08 cm)	4.25 in (10.795 cm)
9664-810	4.5 in (11.43 cm)	5 in (12.7 cm)	4.25 in (10.795 cm)
9667-110	4.5 in (11.43 cm)	7.75 in (19.685 cm)	4.25 in (10.795 cm)
9667-610	4.5 in (11.43 cm)	5 in (12.7 cm)	4.25 in (10.795 cm)
9667-710	4.5 in (11.43 cm)	5 in (12.7 cm)	4.25 in (10.795 cm)
9667-810	4.5 in (11.43 cm)	5 in (12.7 cm)	4.25 in (10.795 cm)
9667-910	4.5 in (11.43 cm)	5 in (12.7 cm)	4.25 in (10.795 cm)
9668-110	4.5 in (11.43 cm)	7.75 in (19.685 cm)	4.25 in (10.795 cm)
9670-110	7 in (17.78 cm)	19 in (48.26 cm)	4.75 in (12.065 cm)
9670-610	7 in (17.78 cm)	19 in (48.26 cm)	4.75 in (12.065 cm)
9671-610	4.42 in (11.23 cm)	5.02 in (12.75 cm)	4.25 in (10.795 cm)
9671-810	7 in (17.78 cm)	19 in (48.26 cm)	4.75 in (12.065 cm)
9672-810	7 in (17.78 cm)	19 in (48.26 cm)	4.75 in (12.065 cm)
9673-810	7 in (17.78 cm)	19 in (48.26 cm)	4.75 in (12.065 cm)
9750-210	3 in (7.62 cm)	5 in (12.7 cm)	4.25 in (10.795 cm)
9750-310	3 in (7.62 cm)	5 in (12.7 cm)	4.25 in (10.795 cm)
9750-410	3 in (7.62 cm)	5 in (12.7 cm)	4.25 in (10.795 cm)
9750-810	3 in (7.62 cm)	5 in (12.7 cm)	4.25 in (10.795 cm)
9753-110	3 in (7.62 cm)	5 in (12.7 cm)	4.25 in (10.795 cm)
9760-210	4.5 in (11.43 cm)	10 in (25.4 cm)	4.25 in (10.795 cm)
9760-410	4.5 in (11.43 cm)	10 in (25.4 cm)	4.25 in (10.795 cm)
9761-210	4.5 in (11.43 cm)	5 in (12.7 cm)	4.25 in (10.795 cm)
9761-410	4.5 in (11.43 cm)	5 in (12.7 cm)	4.25 in (10.795 cm)
9762-210	4.5 in (11.43 cm)	5 in (12.7 cm)	4.25 in (10.795 cm)
9762-410	4.5 in (11.43 cm)	5 in (12.7 cm)	4.25 in (10.795 cm)
9763-810	4.5 in (11.43 cm)	5 in (12.7 cm)	4.25 in (10.795 cm)
9764-310	5.22 in (13.26 cm)	19 in (48.26 cm)	3.24 in (8.23 cm)
9765-210	4.5 in (11.43 cm)	10 in (25.4 cm)	4.25 in (10.795 cm)
9765-610	4.5 in (11.43 cm)	5 in (12.7 cm)	4.25 in (10.795 cm)
9766-210	4.5 in (11.43 cm)	5 in (12.7 cm)	4.25 in (10.795 cm)

Table 220 Panel Dimensions *(continued)*

Panel Model	Width (across DIN rail)	Length (along DIN rail)	Height (out from DIN rail)
9766-510	4.5 in (11.43 cm)	5 in (12.7 cm)	4.25 in (10.795 cm)
9771-210	4.5 in (11.43 cm)	5.729 in (14.552 cm)	4.25 in (10.795 cm)
9782-110	4.42 in (11.23 cm)	5.02 in (12.75 cm)	4.25 in (10.795 cm)
9783-110	4.42 in (11.23 cm)	5.02 in (12.75 cm)	4.25 in (10.795 cm)
9784-610	4.42 in (11.23 cm)	5.02 in (12.75 cm)	4.25 in (10.795 cm)
9785-610	4.42 in (11.23 cm)	5.02 in (12.75 cm)	4.25 in (10.795 cm)
9786-110	4.42 in (11.23 cm)	5.02 in (12.75 cm)	4.25 in (10.795 cm)
9787-110	4.42 in (11.23 cm)	5.02 in (12.75 cm)	4.25 in (10.795 cm)
9789-610	4.42 in (11.23 cm)	9.88 in (25.08 cm)	4.25 in (10.795 cm)
9790-610	4.42 in (11.23 cm)	5.02 in (12.75 cm)	4.25 in (10.795 cm)
9791-610	4.42 in (11.23 cm)	5.02 in (12.75 cm)	4.25 in (10.795 cm)
9792-610	4.42 in (11.23 cm)	7.75 in (19.685 cm)	4.25 in (10.795 cm)
9793-110	4.42 in (11.23 cm)	5.02 in (12.75 cm)	4.25 in (10.795 cm)
9794-110	4.42 in (11.23 cm)	5.02 in (12.75 cm)	4.25 in (10.795 cm)
9795-610	4.42 in (11.23 cm)	5.02 in (12.75 cm)	4.25 in (10.795 cm)
9853-610	3 in (7.62 cm)	5 in (12.7 cm)	4.25 in (10.795 cm)
9860-610	4.42 in (11.23 cm)	5.02 in (12.75 cm)	4.25 in (10.795 cm)
9861-610	4.42 in (11.23 cm)	5.02 in (12.75 cm)	4.25 in (10.795 cm)
9863-710	3 in (7.62 cm)	6.66 in (16.9164 cm)	4.25 in (10.795 cm)
9871-810	3 in (7.62 cm)	5 in (12.7 cm)	4.25 in (10.795 cm)
BP9228-010	3.5 in (8.89 cm)	19 in (48.26 cm)	8 in (20.32 cm)
BP9229-010	3.5 in (8.89 cm)	19 in (48.26 cm)	8 in (20.32 cm)

E

Shield Ground

This appendix shows how to connect a shield to earth. The typical parts shown are available from Phoenix Contact. See additional installation guidelines in the *Planning and Installation Guide for Tricon v9–v10 Systems*.

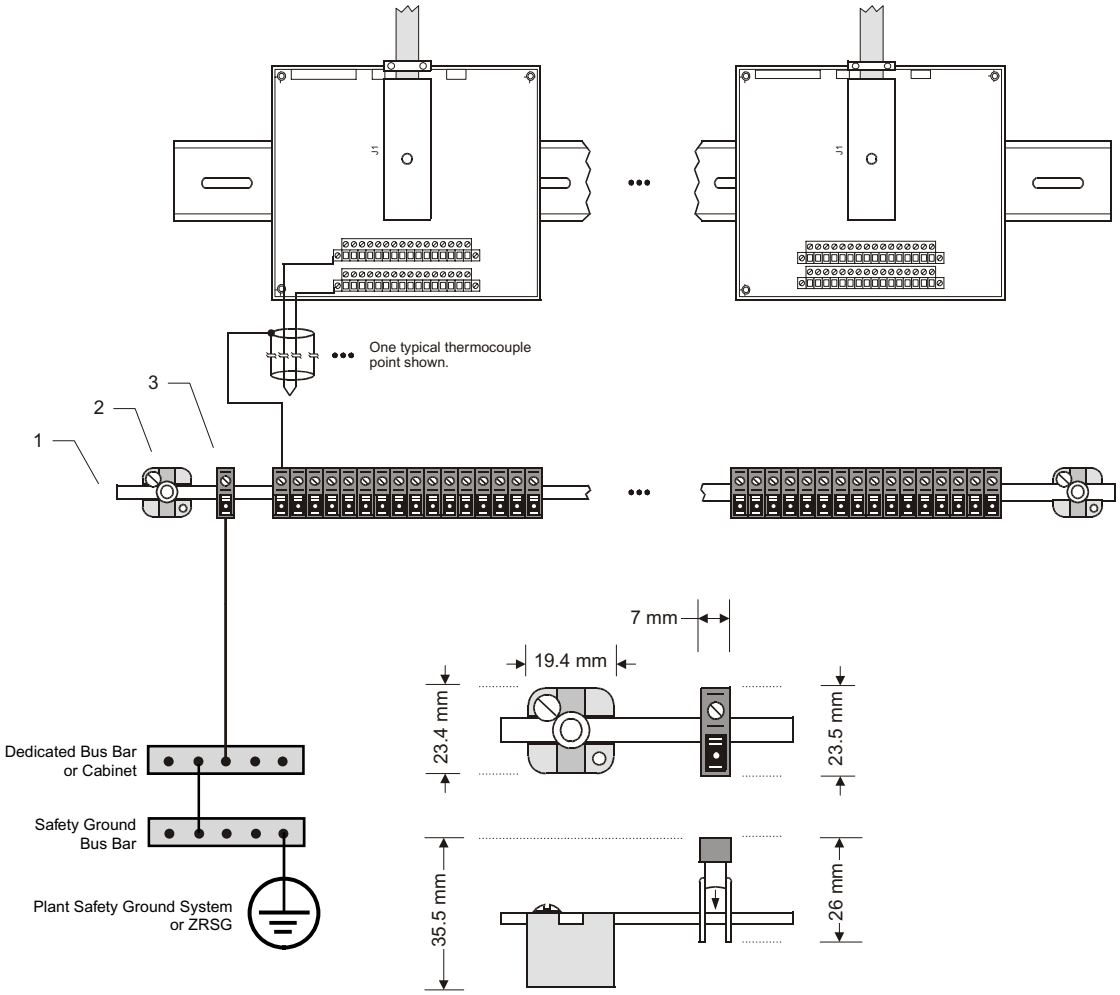

Ref. #	Type	Description	Phoenix Order #
1	NLS-MS 3/10	Neutral busbar	04 04 18 5
2	AB/SS	Support	04 04 42 8
3	AKG 4 Black	N/PE terminal block	04 21 03 2

F

Panel Labels

16-Point Non-Commoned DI/DO/RO Panels 373
16-Point Non-Commoned AI/TI Panels 374
16-Point Commoned AI/DI/DO Panels 375
32-Point Commoned AI/DI Panels 376
16-Point Commoned AI ATEX/RG 1.180 Panels 377
16-Point RTD/TC/AI Panels 378

Overview

This appendix shows how to apply termination panel labels. Because some modules (32- and 64-point input modules and 32-point output modules) require a two-panel arrangement to accommodate all points, each standard panel must have a set of labels that indicate the correct range of points. For instance, a 64-point module requires two 32-point panels: the first panel connects points 1–32; the second panel connects points 33–64. Panels that are not used in a two-panel arrangement are labelled at the factory.

Standard panels that require labels include the appropriate labels as loose-piece parts. Since a panel can be connected as the first or second panel, a set of labels appropriate for either range is provided with every panel, with a duplicate label for each row of terminals on each terminal block. Any unused labels can be stored or discarded.

Attach the appropriate labels to each panel as shown in these illustrations.

16-Point Non-Commoned DI/DO/RO Panels

This figure illustrates placement of labels for 16-point digital input, digital output, and relay output termination panels.

Panel	Type
9561-110	DI
9661-110	DO
9662-110	DO
9667-110	DO
9667-310	DO
9668-110	RO

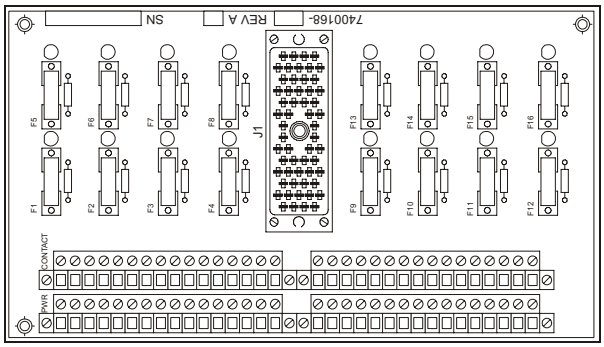

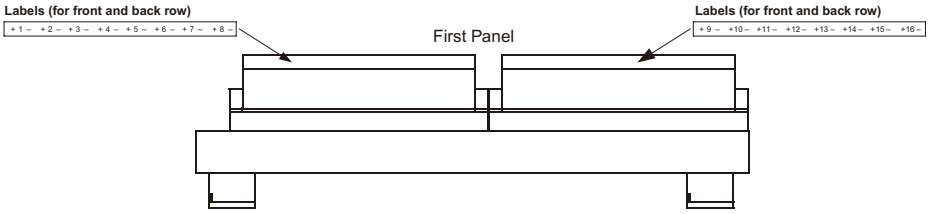

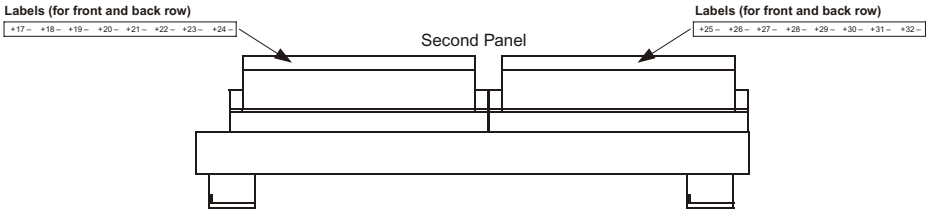

Figure 269 16-Point Non-Commoned DI/DO/RO Panel Label Placement

16-Point Non-Commoned AI/TI Panels

This figure illustrates placement of labels for 16-point non-commoned analog input and thermocouple input termination panels.

Panel	Type
9763-810	AI
9765-610	TI
9766-210	TI
9766-510	TI

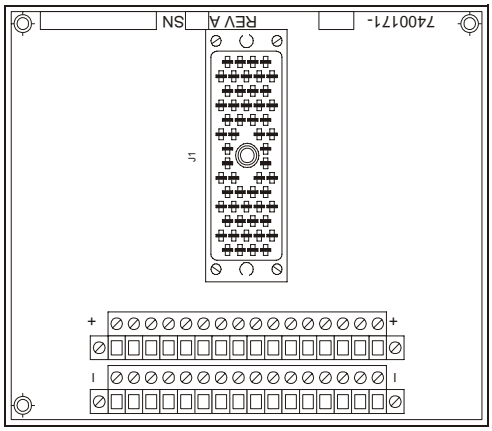

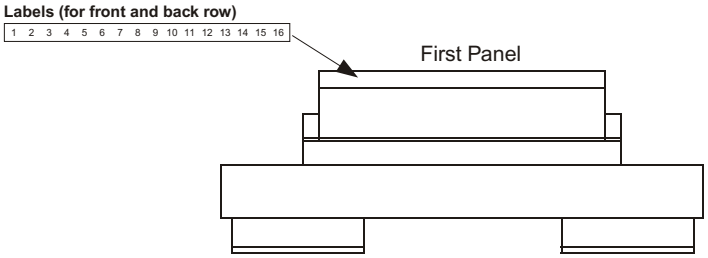

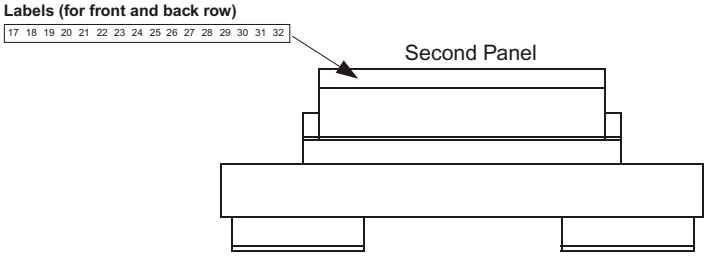

Figure 270 16-Point Non-Commoned AI/TI Panel Label Placement

16-Point Commoned AI/DI/DO Panels

This figure illustrates placement of labels for 16-point commoned analog input, digital input, and digital output termination panels.

Panel	Type
9561-810	DI
9562-810	DI
9563-810	DI
9661-610	DO
9661-710	DO
9661-910	DO
9662-610	DO
9662-810	DO
9667-610	DO
9667-710	DO
9667-810	DO
9761-210	AI
9761-410	AI
9762-210	AI
9762-410	AI

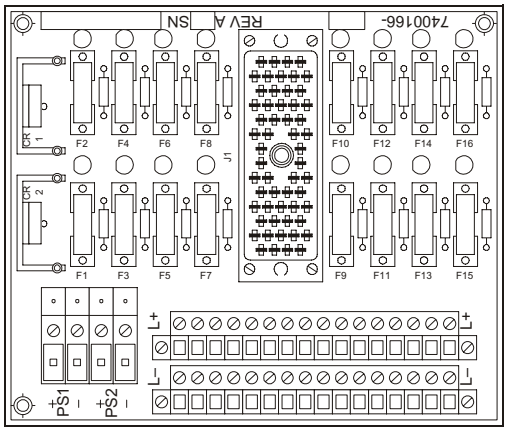

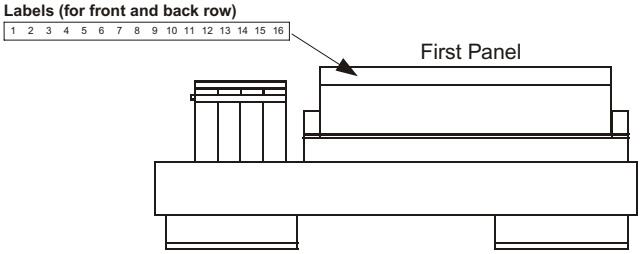

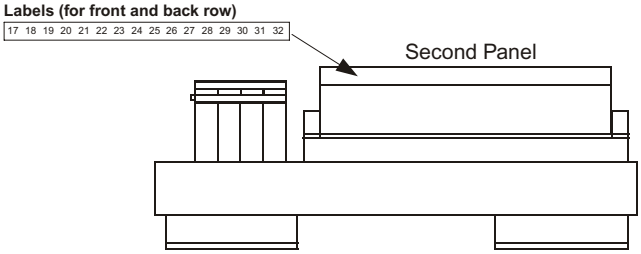

Figure 271 16-Point Commoned AI/DI/DO Panel Label Placement

32-Point Commoned AI/DI Panels

This figure illustrates placement of labels for 32-point commoned analog input and digital input termination panels.

Panel	Type
9565-710	DI
9565-810	DI
9566-710	DI
9566-810	DI
9567-810	DI
9760-210	AI
9760-410	AI

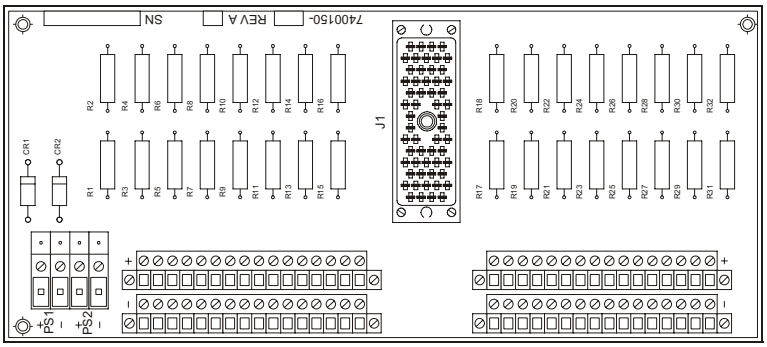

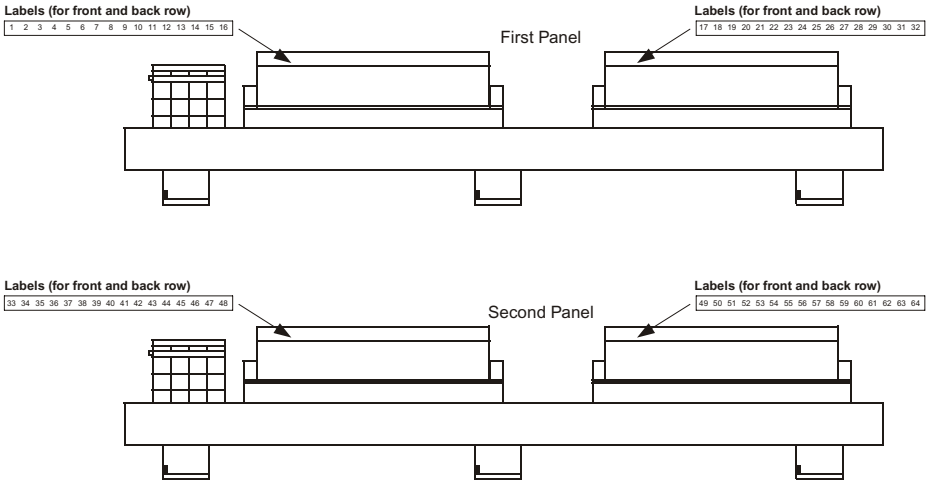

Figure 272 32-Point Commoned AI/DI Panel Label Placement

16-Point Commoned AI ATEX/RG 1.180 Panels

This figure illustrates placement of labels for 32-point commoned analog input ATEX and RG 1.180 termination panels.

Panel	Type
9783-110	AI
9787-110	AI
9790-610	AI
9791-610	AI
9795-610	AI

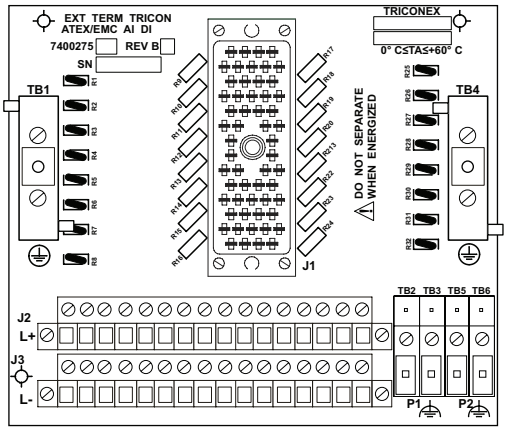

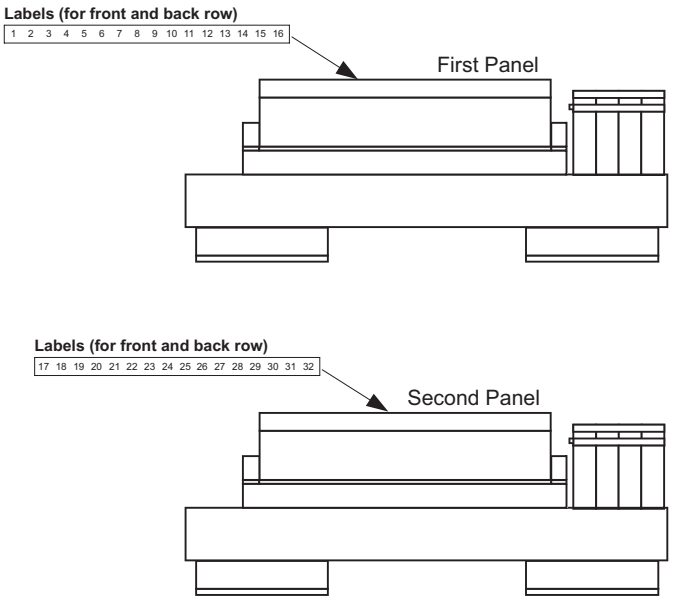

Figure 273 16-Point Commoned AI ATEX/RG 1.180 Label Placement

16-Point RTD/TC/AI Panels

This figure illustrates placement of labels for 16-point RTD/TC/AI termination panels.

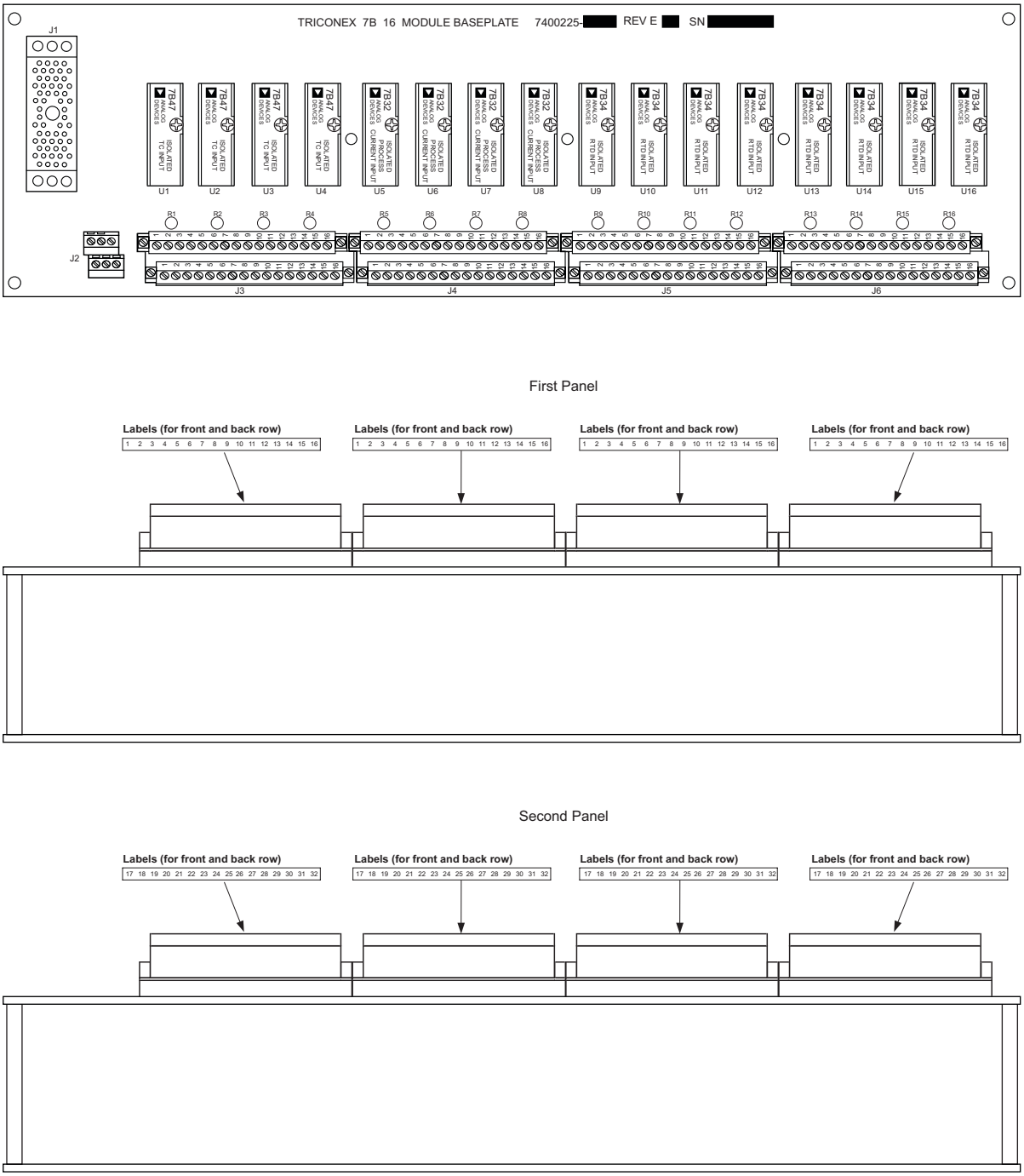

Figure 274 16-Point RTD/TC/AI Panel Label Placement

G

Part Number Cross-Reference

This table identifies the ETA part number and cable part number for each termination panel model number.

Table 221 Part Number Cross-Reference

Model #	ETA	Cable
9551-110	3000400-160	4000093-110
9552-610	3000400-260	4000093-210
9553-610	3000400-360	4000093-310
9561-110	3000560-110	4000093-110
9561-810	3000510-180	4000093-110
9562-810	3000510-280	4000093-210
9563-810	3000510-380	4000093-310
9563-910	3000510-390	4000093-310
9565-710	3000530-280	4000093-210
9565-810	3000540-280	4000093-210
9566-710	3000530-380	4000093-310
9566-810	3000540-380	4000093-310
9567-810	3000530-180	4000093-110
9570-610	3000768-370	4000165-310
9571-610	3000768-390	4000165-310
9572-610	3000771-380	4000165-310
9651-110	3000410-160	4000094-110
9652-610	3000410-260	4000094-210
9653-610	3000410-360	4000094-310
9661-110	3000570-110	4000094-110
9661-510	3000550-160	4000094-110

Table 221 Part Number Cross-Reference *(continued)*

Model #	ETA	Cable
9661-610	3000520-160	4000094-110
9661-710	3000520-190	4000094-110
9661-810	3000550-180	4000094-110
9661-910	3000520-180	4000094-110
9662-110	3000570-310	4000094-310
9662-610	3000520-390	4000094-310
9662-710	3000550-390	4000094-310
9662-810	3000520-380	4000094-310
9662-910	3000550-380	4000094-310
9663-610	3000725-160	4000094-110
9664-110	3000726-110	4000094-110
9664-810	3000520-170	4000094-110
9667-110	3000570-710	4000094-210
9667-610	3000520-290	4000094-210
9667-710	3000520-260	4000094-210
9667-810	3000520-280	4000094-210
9667-910	3000550-280	4000094-210
9668-110	3000590-110	4000094-110
9670-110	3000290-110	4000111-110
9670-610	3000290-160	4000111-110
9671-610	3000769-390	4000166-310
9671-810	3000290-380	4000111-310
9672-810	3000290-280	4000111-210
9673-810	3000290-181	4000111-110
9750-210	3000420-120	4000093-510
9750-310	3000420-310	4000093-310
9750-410	3000420-410	4000093-210
9750-810	3000420-180	4000093-510
9753-110	3000400-510	4000103-510
9760-210	3000470-510	4000093-510
9760-410	3000470-530	4000093-510
9761-210	3000510-510	4000103-510

Table 221 Part Number Cross-Reference *(continued)*

Model #	ETA	Cable
9761-410	3000510-530	4000103-510
9762-210	3000510-560	4000103-510
9762-410	3000510-580	4000103-510
9763-810	3000580-110	4000103-510
9764-310	3000712-200	4000103-510
9765-210	3000475-520	4000093-510
9765-610	3000580-230	4000103-510
9766-210	3000580-210	4000103-510
9766-510	3000580-220	4000103-510
9771-210	3000656-210	4000103-510
9782-110	3000767-280	4000142-510
9783-110	3000767-160	4000142-510
9784-610	3000767-220	4000164-510
9785-610	3000767-210	4000164-510
9786-110	3000767-230	4000164-510
9787-110	3000767-110	4000164-510
9789-610	3000768-510	4000165-510
9790-610	3000771-560	4000142-510
9791-610	3000771-510	4000164-510
9792-610	3000772-660	4000103-510
9793-110	3000767-115	4000164-510
9794-110	3000767-165	4000142-510
9795-610	3000771-460	4000142-510
9853-610	3000400-530	4000098-510
9860-610	3000770-610	4000157-510
9861-610	3000770-560	4000163-510
9863-710	1600049-010 1600049-100	4000098-510
9871-810	3000818-560	4000163-510

H

Minimum Bend Radiuses of Cables

This table identifies the minimum bend radiuses of cables.

Table 222 Minimum Bend Radiuses of Cables

Triconex Cable Assembly Number	Minimum Bend Radius of Cable
4000002-006	4 in (10.16 cm)
4000004-0xx	1.75 in (4.445 cm)
4000006-0xx	2.125 in (5.3975 cm)
4000007-0xx	2.125 in (5.3975 cm)
4000008-0xx	2.125 in (5.3975 cm)
4000009-0xx	2.125 in (5.3975 cm)
4000010-00x	3 in (7.62 cm)
4000015-0xx	2.125 in (5.3975 cm)
4000016-0xx	2.125 in (5.3975 cm)
4000017-0xx	2.125 in (5.3975 cm)
4000027-006	2.5 in (6.35 cm)
4000028-006	1.75 in (4.445 cm)
4000029-0xx	5.5 in (13.97 cm)
4000030-025	1.75 in (4.445 cm)
4000041-0xx	2.125 in (5.3975 cm)
4000042-xxx	5.6 in (14.224 cm)
4000043-1xx	4.6 in (11.684 cm)
4000050-00x	3.25 in (8.255 cm)
4000052-006	2.5 in (6.35 cm)
4000054-x10	4.6 in (11.684 cm)
4000055-x10	5.6 in (14.224 cm)

Table 222 Minimum Bend Radiuses of Cables *(continued)*

Triconex Cable Assembly Number	Minimum Bend Radius of Cable
4000056-00x	3 in (7.62 cm)
4000058-x10	5.6 in (14.224 cm)
4000059-510	6.25 in (15.875 cm)
4000060-510	4.25 in (10.795 cm)
4000061-x10	3.5 in (8.89 cm)
4000062-x10	4.6 in (11.684 cm)
4000063-510	6.25 in (15.875 cm)
4000064-510	5.25 in (13.335 cm)
4000065-510	4.25 in (10.795 cm)
4000066-025	1.75 in (4.445 cm)
4000068-x10	5.6 in (14.224 cm)
4000069-x10	6.25 in (15.875 cm)
4000070-0x0	4.25 in (10.795 cm)
4000071-0x0	3.5 in (8.89 cm)
4000072-x10	4.6 in(11.684 cm)
4000073-x10	6.25 in (15.875 cm)
4000074-0x0	5.25 in (13.335 cm)
4000075-0x0	4.25 in (10.795 cm)
4000076-510	5 in (12.7 cm)
4000076-510	6.25 in (15.875 cm)
4000078-x10	5.6 in (14.224 cm)
4000079-510	6.25 in (15.875 cm)
4000085-x10	4.6 in (11.684 cm)
4000086-510	5.25 in (13.335 cm)
4000089-025	1.75 in (4.445 cm)
4000090-025	2.125 in (5.3975 cm)
4000091-0xx	2.125 in (5.3975 cm)
4000092-x10	5.6 in (14.224 cm)
4000093-x10	5.6 in (14.224 cm)
4000094-x10	5.6 in (14.224 cm)
4000096-x01	3.5 in (8.89 cm)
4000098-510	6.25 in (15.875 cm)

Table 222 Minimum Bend Radiuses of Cables *(continued)*

Triconex Cable Assembly Number	Minimum Bend Radius of Cable
4000100-310	5 in (12.7 cm)
4000101-310	4.5 in (11.43 cm)
4000102-x10	5 in (12.7 cm)
4000103-510	6.25 in (15.875 cm)
4000104-x10	4.6 in (11.684 cm)
4000107-x0x	3.5 in (8.89 cm)
4000109-x10	5.6 in (14.224 cm)
4000110-x10	4.6 in (11.684 cm)
4000111-x10	5.6 in (14.224 cm)
4000112-x10	5 in (12.7 cm)
4000113-x10	5 in (12.7 cm)
4000114-510	6 in (15.24 cm)
4000115-x10	5.6 in (14.224 cm)
4000116-510	5.5 in (13.97 cm)
4000117-110	5.6 in (14.224 cm)
4000118-510	5.5 in (13.97 cm)
4000120-510	6 in (15.24 cm)
4000121-010	5.5 in (13.97 cm)
4000122-x10	5.6 in (14.224 cm)
4000123-310	5.6 in (14.224 cm)
4000126-110	5.6 in (14.224 cm)
4000127-510	5.5 in (13.97 cm)
4000128-510	5.5 in (13.97 cm)
4000129-510	5.5 in (13.97 cm)
4000139-010	7.4 in (18.796 cm)
4000140-x10	6.6 in (16.764 cm)
4000141-x10	6.6 in (16.764 cm)
4000142-x10	8.1 in (20.574 cm)
4000143-x10	5.5 in (13.97 cm)
4000144-x10	6.6 in (16.764 cm)
4000147-510	7.4 in (18.796 cm)
4000150-510	7.4 in (18.796 cm)

Table 222 Minimum Bend Radiuses of Cables *(continued)*

Triconex Cable Assembly Number	Minimum Bend Radius of Cable
4000151-510	7.4 in (18.796 cm)
4000153-00x	3.6 in (9.144 cm)
4000154-00x	4.2 in (10.668 cm)
4000155-110	6.6 in (16.764 cm)
4000155-510	7.4 in (18.796 cm)
4000157-x10	8.1 in (20.574 cm)
4000161-002	3 in (7.62 cm)
4000163-xxx	6.25 in (15.875 cm)
4000164-xxx	6.25 in (15.875 cm)
4000165-xxx	5.6 in (14.224 cm)
4000166-xxx	5.6 in (14.224 cm)
4000172-3xx	5 in (12.7 cm)
4000173-3xx	4 in (10.16 cm)
4000174-3xx	4 in (10.16 cm)
4000182-5xx	6.25 in (15.875 cm)
4000183-5xx	5 in (12.7 cm)
4000184-5xx	5.5 in (13.97 cm)
4000185-3xx	5 in (12.7 cm)
4000186-3xx	5 in (12.7 cm)
4100002-001	3.5 in (8.89 cm)
4100005-xx0	2 in (5.08 cm)

I

Low-Density Chassis I/O Module Compatibility

Overview 388

Module Upgrades 388

ETP Upgrades for Compatibility with I/O Modules 389

Overview

This appendix describes the compatibility of Model 3720, 3721, and 3625 I/O Modules with low-density Tricon systems that have been upgraded to v10.2.*x* or later.

To install Model 3720, 3721, or 3625 I/O Modules in low-density Tricon systems, in most cases, you must upgrade the termination panels and interface cables, and install a new chassis interface module. In most instances, you have the option of using RETMA-rail-mount termination panels or equivalent DIN-rail-mount termination panels.

Upgrade ETP kits are available that include ETPs, cables, and new chassis interface modules.

Note Some existing ETPs used in low-density systems are compatible with Model 3720, 3721, and 3625 I/O Modules. The existing ETP models that are compatible with these I/O modules are identified in this appendix.

Module Upgrades

This table lists existing I/O modules and identifies the newer I/O modules that they can be upgraded with in low-density Tricon systems that have been upgraded to v10.2.*x* or later.

Table 223 Module Upgrades

Module Type	Existing I/O Module	Upgrade I/O Module
AI	3700 32 points	3721 32 points
	3700A 32 points	3721 32 points
	3704E 64 points	3720 64 points
DO	3604E 16 points	3625 32 points
	3614E 8 points	3625 32 points
	3615E 8 points	3625 32 points
	3624 16 points	3625 32 points

ETP Upgrades for Compatibility with I/O Modules

This section identifies External Termination Panel kits that existing ETPs should be replaced with to provide compatibility with Model 3720, 3721, and 3625 I/O Modules in low-density Tricon systems that have been upgraded to v10.2.*x* or later. Also, Existing ETP models that are already compatible with these I/O modules are identified.

Topics include:

- 3700 and 3700A AI Module ETP Upgrade on page 390
- 3704E AI Module ETP Upgrade on page 391
- 3604E DO Module ETP Upgrade on page 392
- 3614E DO Module ETP Upgrade on page 394
- 3615E DO Module ETP Upgrade on page 396
- 3624 DO Module ETP Upgrade on page 398

3700 and 3700A AI Module ETP Upgrade

This table lists ETPs used with Model 3700 and Model 3700A AI Modules in low-density systems and identifies upgrade RETMA-rail-mount ETP kits that you can replace them with when you are upgrading to the Model 3721 AI Module.

Table 224 3700 and 3700A AI Module—Upgrade to 3721 with RETMA-Rail ETP Kits

RETMA-Rail ETP Model	RETMA-Rail ETP Description	Upgrade RETMA-Rail ETP Kit Model	Upgrade ETP Kit Includes...
2750-2[1]	Current input, 0–5 VDC, 32 pts.	2750-2L	2 x 4000184-510 (cable) 1 x 3000280-500 (interface module) 1 x 3000142-220 (ETP)
2750-8[2]	Voltage input, 0–5 VDC, 32 pts.	2750-8L	2 x 4000184-510 (cable) 1 x 3000280-500 (interface module) 1 x 3000142-280 (ETP)

1. This ETP does not require an upgrade kit for compatibility with Model 3721 AI Modules in low-density systems; however, if you want to add additional AI points, use the 2750-2L.
2. This ETP does not require an upgrade kit for compatibility with Model 3721 AI Modules in low-density systems; however, if you want to add additional AI points, use the 2750-8L.

This table lists DIN-rail-mount ETPs and associated upgrade ETP kits that you can use to replace ETPs connected to Model 3700 and Model 3700A AI Modules in low-density systems when you are upgrading to the Model 3721 AI Module.

Table 225 3700 and 3700A AI Module—Upgrade to 3721 with DIN-Rail ETP Kits

DIN-Rail ETP Model	DIN-Rail ETP Description	Upgrade DIN-Rail ETP Kit Model	Upgrade ETP Kit Includes...
9761-210	Current input, 0–5 VDC, -5–5 VDC, 16 pts.	9761-210L	2 x 4000182-510 (cable) 1 x 3000280-500 (interface module) 2 x 3000510-510 (ETP)
9763-810	Voltage input, 0–5 VDC, -5–5 VDC, 0–10 VDC, 16 pts.	9763-810L	2 x 4000182-510 (cable) 1 x 3000280-500 (interface module) 2 x 3000580-110 (ETP)
9771-210	Current input, 0–5 VDC, user configurable, 32 pts.	9771-210L	2 x 4000182-510 (cable) 1 x 3000280-500 (interface module) 2 x 3000656-210 (ETP)
9764-310	RTD/TC/AI, 0–5 VDC, -5–5 VDC, 16 pts.	9764-310L	2 x 4000182-510 (cable) 1 x 3000280-500 (interface module) 2 x 3000712-200 (ETP)

3704E AI Module ETP Upgrade

This table lists ETPs used with Model 3704E AI Modules in low-density systems and identifies upgrade RETMA-rail-mount ETP kits that you can replace them with when you are upgrading to the Model 3720 AI Module.

Table 226 3704E AI Module—Upgrade to 3720 with RETMA-Rail ETP Kits

RETMA-Rail ETP Model	Upgrade RETMA-Rail ETP Kit Model	Upgrade ETP Kit Includes...
2760-2[1] Current input, 0–5 VDC, 64 pts.	n/a	n/a
2760-8[1] Voltage input, 0–5 VDC, 64 pts.	n/a	n/a

1. This ETP does not require a new kit for compatibility with Model 3720 AI Modules in low-density systems.

This table lists DIN-rail-mount ETPs and associated upgrade ETP kits that you can use to replace ETPs connected to Model 3704E AI Modules in low-density systems when you are upgrading to the Model 3720 AI Module.

Table 227 3704E AI Module—Upgrade to 3720 with DIN-Rail ETP Kits

DIN-Rail ETP Model	DIN-Rail ETP Description	Upgrade DIN-Rail ETP Kit Model	Upgrade ETP Kit Includes...
9765-210	3-wire current input, 0–5 VDC, 32 pts.	9765-210L	2 x 4000183-510 (cable) 1 x 3000280-500 (interface module) 2 x 3000475-520 (ETP)
9760-210	Current input, 0–5 VDC, 32 pts.	9760-210L	2 x 4000183-510 (cable) 1 x 3000280-500 (interface module) 2 x 3000470-510 (ETP)
9760-410	Current input, 0–10 VDC, 32 pts.	9760-410L	2 x 4000183-510 (cable) 1 x 3000280-500 (interface module) 2 x 3000470-530 (ETP)

3604E DO Module ETP Upgrade

This table lists ETPs used with Model 3604E DO Modules in low-density systems and identifies upgrade RETMA-rail-mount ETP kits that you can replace them with when you are upgrading to the Model 3625 DO Module.

Note The 16-point upgrade ETP kits are configured with the assumption that you have one similar existing ETP per 3625 module. To terminate all of the points on the module, which is recommended, you may wish to purchase additional ETPs separately.

Table 228 3604E DO Module—Upgrade to 3625 with RETMA-Rail ETP Kits

RETMA-Rail ETP Model	RETMA-Rail ETP Description	Upgrade RETMA-Rail ETP Kit Model	Upgrade ETP Kit Includes...
2652-1	24 VDC, non-commoned, 16 pts.	2652-110L	2 x 4000172-310 (cable) 1 x 3000280-300 (interface module) 1 x 3000120-310 (ETP)
2652-6	24 VDC, 1x8 commoned, 16 pts.	2652-610L	2 x 4000172-310 (cable) 1 x 3000280-300 (interface module) 1 x 3000120-360 (ETP)
2652-8	24 VDC, redundant, 16 pts.	2652-810L	2 x 4000172-310 (cable) 1 x 3000280-300 (interface module) 1 x 3000120-380 (ETP)
2661-1	24 VDC, external relay, 16 pts.	2661-110L	2 x 4000172-310 (cable) 1 x 3000280-300 (interface module) 1 x 3000290-310 (ETP)
2661-8	24 VDC, commoned, interposing relay, fused, 16 pts.	9671-810L[1]	2 x 4000186-310 (cable) 1 x 3000280-300 (interface module) 1 x 3000290-380 (ETP)

1. This high-density upgrade ETP kit is the only option for compatibility with Model 3625 DO Modules in low-density systems.

CAUTION When you use the supervisory function of the Model 3625 DO Module with the 9671-810L or the 2661-110L ETPs, only the ELCO termination cable and the relay coil will be monitored for field fault detection.

This table lists DIN-rail-mount ETPs and associated upgrade ETP kits that you can use to replace ETPs connected to Model 3604E DO Modules in low-density systems when you are upgrading to the Model 3625 DO Module.

Table 229 3604E DO Module—Upgrade to 3625 with DIN-Rail ETP Kits

DIN-Rail ETP Model	DIN-Rail ETP Description	Upgrade DIN-Rail ETP Kit Model	Upgrade ETP Kit Includes...
9662-110	24 VDC, non-commoned, fused, 16 pts.	9662-110L	2 x 4000185-310 (cable) 1 x 3000280-300 (interface module) 1 x 3000570-310 (ETP)
9662-610	24 VDC, commoned, 16 pts.	9662-610L	2 x 4000185-310 (cable) 1 x 3000280-300 (interface module) 1 x 3000520-390 (ETP)
9662-810	24 VDC, commoned, fused, 16 pts.	9662-810L	2 x 4000185-310 (cable) 1 x 3000280-300 (interface module) 1 x 3000520-380 (ETP)
9653-610	24 VDC, basic, 16 pts.	9653-610L	2 x 4000185-310 (cable) 1 x 3000280-300 (interface module) 1 x 3000410-360 (ETP)
9671-810	24 VDC, commoned, interposing relay, fused, 16 pts.	9671-810L	2 x 4000186-310 (cable) 1 x 3000280-300 (interface module) 1 x 3000290-380 (ETP)

Note A load must be installed at every point to prevent missing-load alarm. If a field load is not available, configure each unused point as non-supervised and install a 470 ohm, 10 W load resistor.

CAUTION When you use the supervisory function of the Model 3625 DO Module with the 9671-810 or the 9671-810L ETPs, only the ELCO termination cable and the relay coil will be monitored for field fault detection.

3614E DO Module ETP Upgrade

This table lists ETPs used with Model 3614E DO Modules in low-density systems and identifies upgrade RETMA-rail-mount ETP kits that you can replace them with when you are upgrading to the Model 3625 DO Module.

Table 230 3614E DO Module—Upgrade to 3625 with RETMA-Rail ETP Kits

RETMA-Rail ETP Model	RETMA-Rail ETP Description	Upgrade RETMA-Rail ETP Kit Model	Upgrade ETP Kit Includes...	Comments
2652-5	24 VDC, 1x16 commoned, 8 pts.	2652-510L0	2 x 4000174-310 (cable) 1 x 3000280-300 (interface module)	Use this kit if you have four eight-point ETPs
		2652-510L1	2 x 4000174-310 (cable) 1 x 3000280-300 (interface module) 1 x 3000120-350 (ETP)	Use this kit if you have three eight-point ETPs
		2652-510L2	2 x 4000174-310 (cable) 1 x 3000280-300 (interface module) 2 x 3000120-350 (ETP)	Use this kit if you have two eight-point ETPs
		2652-510L3	2 x 4000174-310 (cable) 1 x 3000280-300 (interface module) 3 x 3000120-350 (ETP)	Use this kit if you have one eight-point ETP
		2652-510L4	2 x 4000174-310 (cable) 1 x 3000280-300 (interface module) 4 x 3000120-350 (ETP)	Use this kit if you have no eight-point ETPs
2652-9	24 VDC, redundant, 8 pts.	2652-910L0	2 x 4000174-310 (cable) 1 x 3000280-300 (interface module)	Use this kit if you have four eight-point ETPs
		2652-910L1	2 x 4000174-310 (cable) 1 x 3000280-300 (interface module) 1 x 3000120-390 (ETP)	Use this kit if you have three eight-point ETPs
		2652-910L2	2 x 4000174-310 (cable) 1 x 3000280-300 (interface module) 2 x 3000120-390 (ETP)	Use this kit if you have two eight-point ETPs
		2652-910L3	2 x 4000174-310 (cable) 1 x 3000280-300 (interface module) 3 x 3000120-390 (ETP)	Use this kit if you have one eight-point ETP
		2652-910L4	2 x 4000174-310 (cable) 1 x 3000280-300 (interface module) 4 x 3000120-390 (ETP)	Use this kit if you have no eight-point ETPs

This table lists DIN-rail-mount ETPs and associated upgrade ETP kits that you can use to replace ETPs connected to Model 3614E DO Modules in low-density systems when you are upgrading to the Model 3625 DO Module.

Note The 16-point upgrade ETP kits are configured with the assumption that you have one similar existing ETP per 3625 module. To terminate all of the points on the module, which is recommended, you may wish to purchase additional ETPs separately.

Table 231 3614E DO Module—Upgrade to 3625 with DIN-Rail ETP Kits

DIN-Rail ETP Model	DIN-Rail ETP Description	Upgrade DIN-Rail ETP Kit Model	Upgrade ETP Kit Includes...	Comments
9662-910	24 VDC, commoned, fused, 8 pts.	9662-910L0	2 x 4000173-310 (cable) 1 x 3000280-300 (interface module)	Use this kit if you have four eight-point ETPs
		9662-910L1	2 x 4000173-310 (cable) 1 x 3000280-300 (interface module) 1 x 3000550-380 (ETP)	Use this kit if you have three eight-point ETPs
		9662-910L2	2 x 4000173-310 (cable) 1 x 3000280-300 (interface module) 1 x 3000550-380 (ETP)	Use this kit if you have two eight-point ETPs
		9662-910L3	2 x 4000173-310 (cable) 1 x 3000280-300 (interface module) 1 x 3000550-380 (ETP)	Use this kit if you have one eight-point ETP
		9662-910L4	2 x 4000173-310 (cable) 1 x 3000280-300 (interface module) 1 x 3000550-380 (ETP)	Use this kit if you have no eight-point ETPs
9662-610	24 VDC, commoned, 16 pts.	9662-610L	2 x 4000185-310 (cable) 1 x 3000280-300 (interface module) 1 x 3000520-390 (ETP)	
9653-610	24 VDC, basic, 16 pts.	9653-610L	2 x 4000185-310 (cable) 1 x 3000280-300 (interface module) 1 x 3000410-360 (ETP)	

Note If connected, you must disconnect 5 V shorted-load detection power (PS3) for the ETP to function correctly.

Note A load must be installed at every point to prevent missing-load alarm. If a field load is not available, configure each unused point as non-supervised and install a 470 ohm, 10 W load resistor.

3615E DO Module ETP Upgrade

This table lists ETPs used with Model 3615E DO Modules in low-density systems and identifies upgrade RETMA-rail-mount ETP kits that you can replace them with when you are upgrading to the Model 3625 DO Module.

Table 232 3615E DO Module—Upgrade to 3625 with RETMA-Rail ETP Kits

RETMA-Rail ETP Model	RETMA-Rail ETP Description	Upgrade RETMA-Rail ETP Kit Model	Upgrade ETP Kit Includes...	Comments
2652-55	24 VDC, 1x16 commoned, 8 pts.	2652-55L0	2 x 4000174-310 (cable) 1 x 3000280-300 (interface module)	Use this kit if you have four eight-point ETPs
		2652-55L1	2 x 4000174-310 (cable) 1 x 3000280-300 (interface module) 1 x 3000120-355 (ETP)	Use this kit if you have three eight-point ETPs
		2652-55L2	2 x 4000174-310 (cable) 1 x 3000280-300 (interface module) 2 x 3000120-355 (ETP)	Use this kit if you have two eight-point ETPs
		2652-55L3	2 x 4000174-310 (cable) 1 x 3000280-300 (interface module) 3 x 3000120-355 (ETP)	Use this kit if you have one eight-point ETP
		2652-55L4	2 x 4000174-310 (cable) 1 x 3000280-300 (interface module) 4 x 3000120-355 (ETP)	Use this kit if you have no eight-point ETPs
2652-95	24 VDC, redundant, 8 pts.	2652-95L0	2 x 4000174-310 (cable) 1 x 3000280-300 (interface module)	Use this kit if you have four eight-point ETPs
		2652-95L1	2 x 4000174-310 (cable) 1 x 3000280-300 (interface module) 1 x 3000120-395 (ETP)	Use this kit if you have three eight-point ETPs
		2652-95L2	2 x 4000174-310 (cable) 1 x 3000280-300 (interface module) 2 x 3000120-395 (ETP)	Use this kit if you have two eight-point ETPs
		2652-95L3	2 x 4000174-310 (cable) 1 x 3000280-300 (interface module) 3 x 3000120-395 (ETP)	Use this kit if you have one eight-point ETP
		2652-95L4	2 x 4000174-310 (cable) 1 x 3000280-300 (interface module) 4 x 3000120-395 (ETP)	Use this kit if you have no eight-point ETPs

This table lists DIN-rail-mount ETPs and associated upgrade ETP kits that you can use to replace ETPs connected to Model 3615E DO Modules in low-density systems when you are upgrading to the Model 3625 DO Module.

Note The 16-point upgrade ETP kits are configured with the assumption that you have one similar existing ETP per 3625 module. To terminate all of the points on the module, which is recommended, you may wish to purchase additional ETPs separately.

Table 233 3615E DO Module—Upgrade to 3625 with DIN-Rail ETP Kits

DIN-Rail ETP Model	DIN-Rail ETP Description	Upgrade DIN-Rail ETP Kit Model	Upgrade ETP Kit Includes...	Comments
9662-710	24 VDC, commoned, low-power, fused, 8 pts.	9662-710L0	2 x 4000173-310 (cable) 1 x 3000280-300 (interface module)	Use this kit if you have four eight-point ETPs
		9662-710L1	2 x 4000173-310 (cable) 1 x 3000280-300 (interface module) 1 x 3000550-390 (ETP)	Use this kit if you have three eight-point ETPs
		9662-710L2	2 x 4000173-310 (cable) 1 x 3000280-300 (interface module) 2 x 3000550-390 (ETP)	Use this kit if you have two eight-point ETPs
		9662-710L3	2 x 4000173-310 (cable) 1 x 3000280-300 (interface module) 3 x 3000550-390 (ETP)	Use this kit if you have one eight-point ETP
		9662-710L4	2 x 4000173-310 (cable) 1 x 3000280-300 (interface module) 4 x 3000550-390 (ETP)	Use this kit if you have no eight-point ETPs
9662-610	24 VDC, commoned, 16 pts.	9662-610L	2 x 4000185-310 (cable) 1 x 3000280-300 (interface module) 1 x 3000520-390 (ETP)	
9653-610	24 VDC, basic, 16 pts.	9653-610L	2 x 4000185-310 (cable) 1 x 3000280-300 (interface module) 2 x 3000410-360 (ETP)	

Note If connected, you must disconnect 5 V shorted-load detection power (PS3) for the ETP to function correctly.

Note A load must be installed at every point to prevent missing-load alarm. If a field load is not available, configure each unused point as non-supervised and install a 470 ohm, 10 W load resistor.

3624 DO Module ETP Upgrade

This table lists DIN-rail-mount ETPs and associated upgrade ETP kits that you can use to replace ETPs connected to Model 3624 DO Modules in low-density systems when you are upgrading to the Model 3625 DO Module.

Note The 16-point upgrade ETP kits are configured with the assumption that you have one similar existing ETP per 3625 module. To terminate all of the points on the module, which is recommended, you may wish to purchase additional ETPs separately.

Table 234 3624 DO Module—Upgrade to 3625 with DIN-Rail ETP Kits

DIN-Rail ETP Model	DIN-Rail ETP Description	Upgrade DIN-Rail ETP Kit Model	Upgrade ETP Kit Includes...
9662-610	24 VDC, commoned, 16 pts.	9662-610L	2 x 4000185-310 (cable) 1 x 3000280-300 (interface module) 1 x 3000520-390 (ETP)
9653-610	24 VDC, basic, 16 pts.	9653-610L	2 x 4000185-310 (cable) 1 x 3000280-300 (interface module) 1 x 3000410-360 (ETP)

Note A load must be installed at every point to prevent missing-load alarm. If a field load is not available, configure each unused point as non-supervised and install a 470 ohm, 10 W load resistor.

J

Using V8 ETAs with v9/v10 Systems

Selected version 8 "low-density" external termination assemblies (ETAs) can be used with version 9 systems and version 10 systems as identified in Table 235 V8 ETAs Compatible with v9/v10 Systems (page 399). The cables and ETAs must be ordered separately. In some cases, 2 cables must be ordered per ETA. Each ETA includes 1 or 2 external termination panels on a 19 inch RETMA compatible plate. The V8 User's Guide for Field Termination should be used for all ETA application and field wiring information.

Table 235 V8 ETAs Compatible with v9/v10 Systems

V8 Termination Model #	Description	Compatible v9/v10 I/O Module	Compatible v9/v10 Interface Cable	V8 Termination Panel (ETA)
Digital Input				
2551-1	Digital Input, 115 VAC/VDC, Non-commoned	3501E/T	4000104-1xx, 2 required per ETA	3000110-110
2551-6	Digital Input, 115 VAC/VDC, Commoned	3501E/T	4000104-1xx, 2 required per ETA	3000110-160
2551-8	Digital Input, 115 VAC/VDC, Commoned, Redundant	3501E/T	4000104-1xx, 2 required per ETA	3000110-180
2552-6	Digital Input, 48 VAC/VDC, Commoned	3502E	4000104-2xx, 2 required per ETA	3000110-260
2552-8	Digital Input, 48 VAC/VDC, Commoned, Redundant	3502E	4000104-2xx, 2 required per ETA	3000110-280
2553-6	Digital Input, 24 VDC, Commoned	3503E	4000104-3xx, 2 required per ETA	3000110-360

Table 235 V8 ETAs Compatible with v9/v10 Systems *(continued)*

V8 Termination Model #	Description	Compatible v9/v10 I/O Module	Compatible v9/v10 Interface Cable	V8 Termination Panel (ETA)
2553-8	Digital Input, 24 VDC, Commoned, Redundant	3503E	4000104-3xx, 2 required per ETA	3000110-380
2555-6	Digital Input, 48 VDC, Commoned	3504E	4000093-2xx, 2 required per ETA	3000352-280
2555-8	Digital Input, 48 VDC, Commoned, Redundant	3504E	4000093-2xx, 2 required per ETA	3000352-280
2554-6	Digital Input, 24 VDC, Commoned	3504E	4000093-3xx, 2 required per ETA	3000352-380
2554-8	Digital Input, 24 VDC, Commoned, Redundant	3504E	4000093-3xx, 2 required ETA	3000352-380
2560-9	Pulse Input	3510 3511	Not supported	Not supported
Digital Output				
2651-1	Digital Output, 115 VAC, Non-commoned	3601E/T	4000115-1xx	3000120-110
2651-6	Digital Output, 115 VAC, Commoned	3601E/T	4000115-1xx	3000120-160
2652-1	Digital Output, 24 VDC, Non-commoned	3604E	4000115-3xx	3000120-310
2652-6	Digital Output, 24 VDC, Commoned	3604E	4000115-3xx	3000120-360
2652-8	Digital Output, 24 VDC, Commoned, Redundant	3604E	4000115-3xx	3000120-380
2657-1	Digital Output, 48 VDC, Non-commoned	3607E	4000115-2xx	3000120-210
2657-6	Digital Output, 48 VDC, Commoned	3607E	4000115-2xx	3000120-260
2657-8	Digital Output, 48 VDC, Commoned, Redundant	3607E	4000115-2xx	3000120-280

Table 235 V8 ETAs Compatible with v9/v10 Systems *(continued)*

V8 Termination Model #	Description	Compatible v9/v10 I/O Module	Compatible v9/v10 Interface Cable	V8 Termination Panel (ETA)
2651-2 2651-9	Digital Output, 120 VDC, All versions	3603B		For more information, see 9251-210 (120 VDC, non-commoned, 16 pts., 3603B module) on page 122.
2651-7	Digital Output, 120 VDC, All versions	3603B	4000115-1xx	For more information, see 9251-210 (120 VDC, non-commoned, 16 pts., 3603B module) on page 122.
Supervised, Digital Output				
2651-5 2651-3 2651-8 2652-5 2652-9 2657-5 2657-9	Supervised Digital Output, All versions	3611E 3613E 3614E 3617E	Not supported	Not supported
Relay Output				
2658-1	Relay Output, Non-commoned	3636R	4000117-1xx, 2 required per ETA	3000250-010
2658-6	Relay Output, Commoned	3636R	4000117-1xx, 2 required per ETA	3000250-060
2658-8	Relay Output, Commoned, Redundant	3636R	4000117-1xx, 2 required per ETA	3000250-080
Analog Input				
2750-2	AI, 0–20 ma/5 V	3700 3700A	4000118-5xx, 2 required per ETA	3000142-220

Table 235 V8 ETAs Compatible with v9/v10 Systems *(continued)*

V8 Termination Model #	Description	Compatible v9/v10 I/O Module	Compatible v9/v10 Interface Cable	V8 Termination Panel (ETA)
2750-4	AI, 0–20 ma/10 V	3701	4000118-5xx, 2 required per ETA	3000142-240
2750-8	AI, 0–5 V/10 V, Non-commoned	3700 3700A 3701	4000118-5xx, 2 required per ETA	3000142-280
2752-2	EIAI, 0–20 ma/5 V	3703E	4000118-5xx	3000142-320
2752-4	EIAI, 0–20 ma/10 V	3703E	4000118-5xx	3000142-340
2752-8	EIAI, 0–5 V/10 V, Non-commoned	3703E	4000118-5xx	3000142-380
2760-2	Analog Input, 0-20 mA/5 V	3704E	4000093-5xx, 2 required per ETA	3000352-120
2760-8	Analog Input, 0–5/0–10 VDC	3704E	4000093-5xx, 2 required per ETA	3000352-180
2756-2 (upscale) 2756-5 (downscale)	Non-Isolated, Thermocouple Input	3706A	4000118-5xx, 2 required per ETA	3000142-900
2755-6	Isolated, Thermocouple Input	3708E	4000118-5xx	3000142-600
Analog Output				
2852-1	Analog Output	3805E/H	4000116-5xx	3000259-100

K

Warning Labels

Overview 404
General Hazard 405
Hazardous Voltage 406
Hot Surface 407

Overview

This appendix provides a physical description of warning labels that must be attached prominently to the controller for systems in which these hazards apply:

- General Hazard—For applications in which continuous, correct system operation must be assured, the controller and associated equipment should be installed in a locked cabinet with a general-hazard warning label attached prominently.
- Hazardous Voltage—For installations with voltages greater than 30 V_{rms}, 425 V peak, or 36 VDC, the controller and associated equipment must be installed in a locked cabinet with a hazardous-voltage warning label attached prominently.
- Hot Surface—For installations with ambient temperatures exceeding 94°F (35°C), the controller and associated equipment should be installed in a locked cabinet with a hot-surface warning label attached prominently.

Labels must meet the requirements of ANSI Z535, ISO 3864, and IEC 1310-1.

Labels are available from Triconex upon request.

General Hazard

This figure describes a general-hazard label. The label must meet the requirements of ANSI Z535, ISO 3864, and IEC 1310-1.

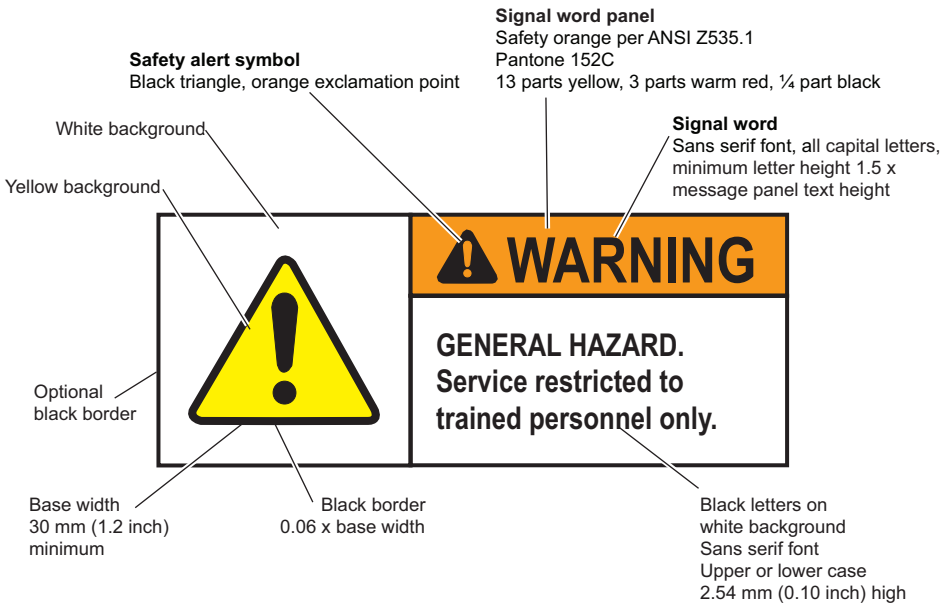

Figure 275 General Hazard Label

Hazardous Voltage

This figure describes a hazardous-voltage label. The label must meet the requirements of ANSI Z535, ISO 3864, and IEC 1310-1.

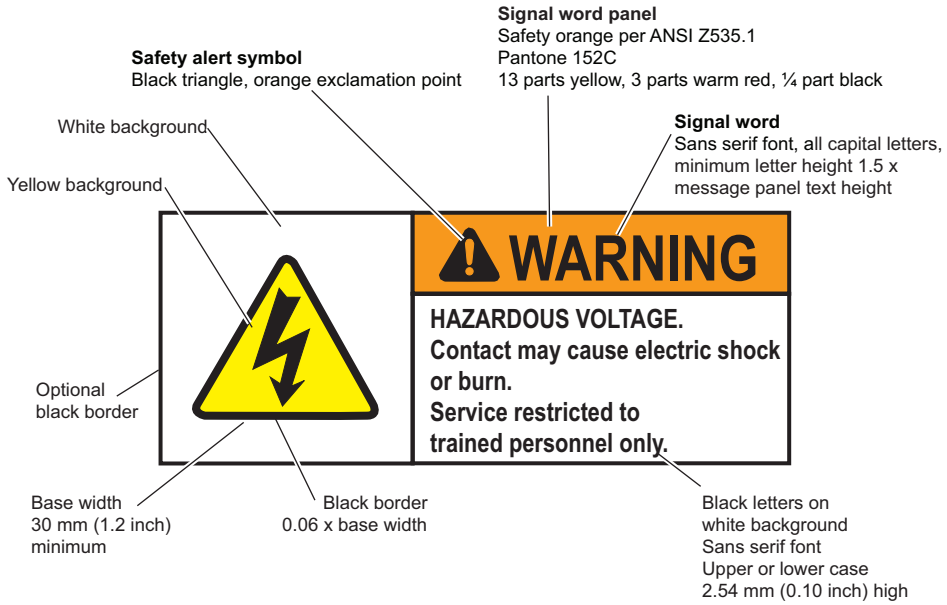

Figure 276 Hazardous Voltage Label

Hot Surface

This figure describes a hot-surface label. The label must meet the requirements of ANSI Z535, ISO 3864, and IEC 1310-1.

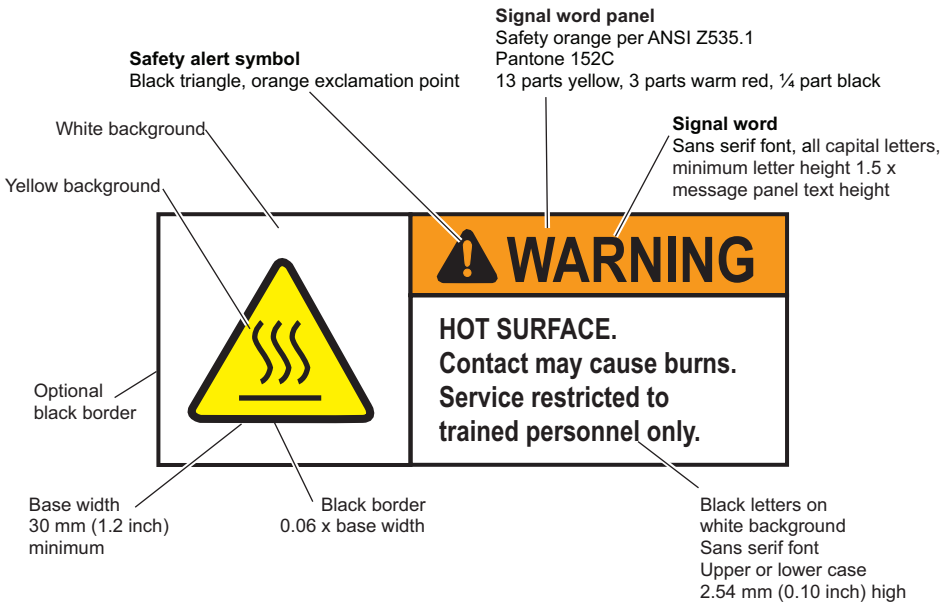

Figure 277 Hot Surface Label