Luminant

Rafael Flores
Senior Vice President &
Chief Nuclear Officer
rafael.flores@luminant.com

Luminant Power
P O Box 1002
6322 North FM 56
Glen Rose, TX 76043

T 254.897.5590
F 254.897.6652
C 817.559.0403

CP-200901585
Log # TXNB-09071

Ref. # 10 CFR 52

November 20, 2009

U. S. Nuclear Regulatory Commission
Document Control Desk
Washington, DC 20555
ATTN: David B. Matthews, Director
Division of New Reactor Licensing

SUBJECT: COMANCHE PEAK NUCLEAR POWER PLANT, UNITS 3 AND 4
DOCKET NUMBERS 52-034 AND 52-035
RESPONSES TO REQUESTS FOR ADDITIONAL INFORMATION NO. 2828 AND 3698

Dear Sir:

Luminant Generation Company LLC (Luminant) herein submits responses to Requests for Additional Information No. 2828 and 3698 for the Combined License Application for Comanche Peak Nuclear Power Plant Units 3 and 4. The affected Final Safety Analysis Report pages are included with the responses.

Should you have any questions regarding these responses, please contact Don Woodlan (254-897-6887, Donald.Woodlan@luminant.com) or me.

The only commitment made in this letter is specified on page 3.

I state under penalty of perjury that the foregoing is true and correct.

Executed on November 20, 2009.

Sincerely,

Luminant Generation Company LLC

Donald R. Woodlan for

Rafael Flores

Attachments 1. Response to Request for Additional Information No. 2828 (CP RAI #124)
2. Response to Request for Additional Information No. 3698 (CP RAI #109)

D090
NRO

Electronic Distribution w/all Attachments

mike.blevins@luminant.com
Rafael.Flores@luminant.com
mlucas3@luminant.com
jeff.simmons@energyfutureholdings.com
Bill.Moore@luminant.com
Brock.Degeyter@energyfutureholdings.com
rbird1@luminant.com
Matthew.Weeks@luminant.com
Allan.Koenig@luminant.com
Timothy.Clouser@luminant.com
Ronald.Carver@luminant.com
David.Volkening@luminant.com
Bruce.Turner@luminant.com
Eric.Evans@luminant.com
Robert.Reible@luminant.com
donald.woodlan@luminant.com
John.Conly@luminant.com
JCaldwell@luminant.com
David.Beshear@txu.com
Ashley.Monts@luminant.com
Fred.Madden@luminant.com
Dennis.Buschbaum@luminant.com
Carolyn.Cosentino@luminant.com

Luminant Records Management

masahiko_kaneda@mnes-us.com
masanori_onozuka@mnes-us.com
ck_paulson@mnes-us.com
joseph_tapia@mnes-us.com
russell_bywater@mnes-us.com
diane_yeager@mnes-us.com
kazuya_hayashi@mnes-us.com
mutsumi_ishida@mnes-us.com
nan_sirirat@mnes-us.com
rjb@nei.org
kak@nei.org
michael.takacs@nrc.gov
cp34update@certrec.com
michael.johnson@nrc.gov
David.Matthews@nrc.gov
Balwant.Singal@nrc.gov
Hossein.Hamzehee@nrc.gov
Stephen.Monarque@nrc.gov
jeff.ciocco@nrc.gov
michael.willingham@nrc.gov
john.kramer@nrc.gov
Brian.Tindell@nrc.gov
Elmo.Collins@nrc.gov
Loren.Plisco@nrc.com
Laura.Goldin@nrc.gov
James.Biggins@nrc.gov
Susan.Vrahoretis@nrc.gov
sfrantz@morganlewis.com
tmatthews@morganlewis.com

Regulatory Commitments in this Letter

This communication contains the following new or revised commitments which will be completed or incorporated into the CPNPP licensing basis as noted. The Commitment Number is used by Luminant for internal tracking.

Number	Commitment	Due Date/Event
6801	FSAR Figure 9.5.1-201 will be revised to show the [fire protection water supply system] FSS interface with ESWS.	February 23, 2010

Attachment 1

Response to Request for Additional Information No. 2828 (CP RAI #124)

RESPONSE TO REQUEST FOR ADDITIONAL INFORMATION

Comanche Peak, Units 3 and 4

Luminant Generation Company LLC

Docket Nos. 52-034 and 52-035

RAI NO.: 2828 (CP RAI #124)

SRP SECTION: 03.05.03 - BARRIER DESIGN PROCEDURES

QUESTIONS for Structural Engineering Branch 1 (AP1000/EPR Projects) (SEB1)

DATE OF RAI ISSUE: 10/9/2009

QUESTION NO.: 03.05.03-1

In NUREG-0800, Standard Review Plan (SRP) 3.5.3., "Barrier Design Procedures," Section II, Acceptance Criteria, specifies the criteria necessary to meet the relevant requirements of 10 CFR Part 50, Appendix A, General Design Criteria (GDC) 2 and GDC 4. SRP Section 3.5.3 includes descriptions of the staff's criteria for providing adequate barriers to resist impact from missiles, pipe whipping, and the effects of discharging fluids in order to protect structures, systems, and components important to safety.

In its FSAR, the applicant considered section 3.5.3 as incorporated by reference from the US-APWR DCD. However, there are site-specific structures and conditions which likely need to be addressed with respect to barrier designs and protection from missiles. In order for staff to verify that the requirements of GDC 2 and GDC 4 have been met, the applicant is requested to provide the basis for determining the minimum thickness of cover to protect buried safety-related structures, systems and components (SSCs) from missile impact. In addition, provide a table of missiles including weight, size, and velocity along with the minimum required cover to provide protection against such missiles.

ANSWER:

1. Minimum thickness of soil

It is the current intent of the CPNPP Units 3 and 4 design to not rely on soil as a barrier for missile protection for safety-related structures, systems and components (SSCs) that are buried below grade. Thus, the determination of the minimum thickness of soil cover to protect buried safety-related SSCs is unnecessary. The concrete structure is the main barrier for missile protection.

2. Tornado generated missiles

FSAR Section 3.5.2 states that there are no site-specific hazards for external events that would produce missiles more energetic than tornado missiles identified for the US-APWR standard plant

design. The design basis for missile protection design of the seismic Category I structures (including buried SSCs) are therefore bounded by the standard plant design criteria for tornado-generated missiles.

The design basis tornado missiles considered (including weight, size, and velocity) are discussed in DCD Subsection 3.5.1.4, which is incorporated by reference in the COLA FSAR. These missiles conform to the spectrum of missiles defined in Table 2 of RG 1.76, Revision 1 for Region I tornados. The spectrum of missiles is chosen to represent (1) a massive high-kinetic-energy missile that deforms on impact, (2) a rigid missile that tests penetration resistance, and (3) a small rigid missile of a size sufficient to pass through any opening in protective barriers. The spectrum of tornado missiles is as follows:

- A 4,000-pound automobile, 16.4 ft by 6.6 ft by 4.3 ft, impacting the structure at normal incidence with a horizontal velocity of 135 ft/s or a vertical velocity of 90.5 ft/s. This missile is considered to potentially impact at all plant elevations up to 30 ft above grade for all grades within 0.5 mile of the plant structures.
- A 6.625-inch diameter by 15 ft long schedule 40 pipe, weighing 287 pounds, impacting the structure end-on at normal incidence with a horizontal velocity of 135 ft/s or a vertical velocity of 90.5 ft/s.
- A 1-inch diameter solid steel sphere assumed to impinge upon barrier openings in the most damaging direction with a velocity of 26 ft/s in any direction.

Impact on R-COLA

None.

Impact on S-COLA

None.

Impact on DCD

None.

Attachment 2

Response to Request for Additional Information No. 3698 (CP RAI #109)

RESPONSE TO REQUEST FOR ADDITIONAL INFORMATION

Comanche Peak, Units 3 and 4

Luminant Generation Company LLC

Docket Nos. 52-034 and 52-035

RAI NO.: 3698 (CP RAI #109)

SRP SECTION: 09.02.01 - STATION SERVICE WATER SYSTEM

QUESTIONS for Balance of Plant Branch 1 (AP1000/EPR Projects) (SBPA)

DATE OF RAI ISSUE: 10/2/2009

QUESTION NO.: 09.02.01-1

This Request for Additional Information (RAI) is necessary for the staff to determine if the application meets the requirements of General Design Criteria (GDC) 44.

The essential service water system (ESWS) must be capable of removing heat from systems, structures and components (SSCs) important to safety during normal operating and accident conditions over the life of the plant in accordance with General Design Criteria (GDC) 44 requirements. Standard Review Plan (SRP) Section 9.2.1, "Station Service Water System," Sections II and III provide guidance on the specific information that should be included in the application for evaluation by the staff.

US-APWR Design Control Document (DCD) COL 9.2 (1) requires the COL Applicant to provide the evaluation of the ESWS pump(s) at the lowest probable water level in the ultimate heat sink (UHS). DCD COL 9.2 (6) specifies that the COL Applicant should provide the ESWP design details including required total dynamic head and net positive suction head (NPSH) available. The ESWS pumps are important components used in part for heat transfer to satisfy GDC 44, and adequate ESWS pump performance including required NPSH for the ESWS pumps needs to be considered as part of the system design. For the above reasons, the NRC staff requests the applicant to provide the following information related to GDC 44 and NSPH consideration:

A. COL 9.2(1)

- Discuss pump vortex formation as part of the NPSH evaluation.
- Provide drawings indicating the elevation of the ESWS pump impellers..
- Include in the FSAR the low water level in the UHS to support adequate NPSH.
- Include in the FSAR the NPSH instrumentation for minimum water level to assure ESWS operability.
- Add the minimum water level to the Technical Specifications (TS), Section 3.7.9, "Ultimate Heat Sink," Surveillance Requirements. The TS currently addresses the total volume of 10.7 million liters (2,850,000 gallons) and approximate level of 12.2 meters (40 feet).

B. COL 9.2(6)

- Provide a clarification to the following FSAR sections related to basin level to support NPSH. FSAR Section 9.2.1.2.2.1, "ESWPS" describes the available NPSH with the lowest expected water level (after 30 days of accident mitigation) in the basin to be approximately 12.2 meters (40 feet). However the UHS basin level is described as 8.8 meters (29 feet) deep in FSAR Section 9.2.5.3, "Safety Evaluation".

- Provide in the FSAR the bases for the ESWS pump total dynamic head (TDH) of 67.1 meters (220 and describe the margins available for the pump as related to system losses. Include in the FSAR a discussion related to TDH and flow to the fire protection system.

ANSWER:

A. COL 9.2 (1)

Drawings

The attached Figure 9.02.01-1 depicts UHS water levels of interest. As noted in FSAR Section 9.2.5, each cooling tower structure consists of the cooling tower (CT) basin located underneath the tower. The Essential Service Water (ESW) intake basin, located underneath the ESW pump house, is adjacent to the CT basin. Both basins are interconnected and maintain the same water level. The CT basin floor elevation is 791 ft. The ESW intake basin floor elevation is 779 ft. The ESWS pump (located in the intake basin) impeller (eye) is located approximately at elevation 781 ft. A vaned basket is installed at the suction of the vertical ESW pump. FSAR Figure 3.8-209 provides a typical section view of the UHS basin including the ESWS pump elevation.

Vortex Formation

A normal water level of approximately 31 feet above the CT basin floor (822 ft elevation) is maintained during plant operation. This provides a water level of 43 feet in the pump intake basin. Following a design basis accident, water level in the pump intake basin after 30 days without makeup will be approximately 12 feet. The ESW pump is located approximately 10 feet from the basin wall. The UHS transfer pump and the ESW pump from the same basin do not operate simultaneously. Thus the pump submergence, location, and operating restrictions preclude any vortex formation.

NPSH at Minimum Water Level

As noted in FSAR Subsection 9.2.1, the ESW pump available NPSH at the lowest water level in the basin after 30 days of accident mitigation is approximately 40 feet. The procurement of ESW pumps will assure that the pump required NPSH has adequate NPSH margin at these conditions and the pump operability is not affected. Available NPSH is approximately 71 feet during normal plant operation.

FSAR Subsection 9.2.1.2.2.1 has been revised to address ESWS adequate NPSH availability and minimum water level.

Instrumentation

FSAR Subsection 9.2.5.5 describes UHS instrumentation to verify minimum water level. The level instruments are shown in FSAR Figure 9.2.5-201. CT basin water level of 30 feet (elevation 821 ft) is alarmed in the Main Control Room (MCR). Technical Specification (TS) 3.7.9 surveillance requirements assure that minimum required water inventory and corresponding water level are maintained.

Technical Specifications

As described in the response to RAI No. 3133 (CP RAI# 90) Question 16-2 (see Luminant letter TXNB-09064 dated November 11, 2009) and Technical Specification (TS) Bases changes included therein, the TS minimum required volume will ensure adequate NPSH is available after 30 days of design basis accident mitigation. Revised TS Bases pages B 3.7.9-1 and B 3.7.9-4 from that response are attached.

B. COL 9.2(6)

As noted above, following a design basis accident, water level in the pump intake basin after 30 days without makeup will be approximately 12 feet.

Available NPSH is computed as follows:

NPSHA = atmospheric pressure + static head – pressure drop through suction piping - vapor pressure corresponding to water temperature of 95 deg. F at pump suction

= (14.3 x 2.31 / 0.995) ft + 10 ft (water level elevation – impeller eye elevation) – 0.0 – 1.88 ft

= 41.32 ft

For conservatism 40 ft NPSHA is used.

The 29-foot water depth in the CT basin described in FSAR Subsection 9.2.5.3 is used for calculating usable water volume allowing for sedimentation and measurement uncertainties. Calculated NPSHA is based on having TS minimum water volume available (from three basins) at the initiation of the accident. FSAR Subsection 9.2.5.3 has been revised to clarify that the minimum volume in the CT basin maintains adequate ESWS pump NPSH under design basis conditions.

Total continuous ESW flow required by all users during a design basis LOCA is 12,043 gpm per train. Each ESW pump is designed for 13,000 gpm flow rate thus providing adequate flow margin. As noted in FSAR Subsection 9.2.1.3, the ESWS serves as a backup source to the fire protection system and supplies 150 gpm for two hours from one of the operating trains. This intermittent additional flow will have no impact on pump capacity. Refer to the response to Question 09.02.01-5 below for additional information regarding use of the ESWS as a backup to the fire protection water supply.

Pressure drop across users is conservatively estimated in computing system head losses. Total calculated system losses, including static head (lift), are approximately 190 feet. The pump design total dynamic head is 220 ft and therefore provides ample margin. FSAR Subsection 9.2.1.2.2.1 has been revised to reflect the ESWP TDH margin.

Impact on R-COLA

See attached mark-up of FSAR Draft Revision 1 pages 9.2-2 and 9.2-11.

Impact on S-COLA

None.

Impact on DCD

None.

Attachments

Figure 9.02.01-1

TS Bases pages B 3.7.9-1 and B 3.7.9-4

RAI NO.: 3698 (CP RAI #109)
Question 09.02.01-1
Attachment 1

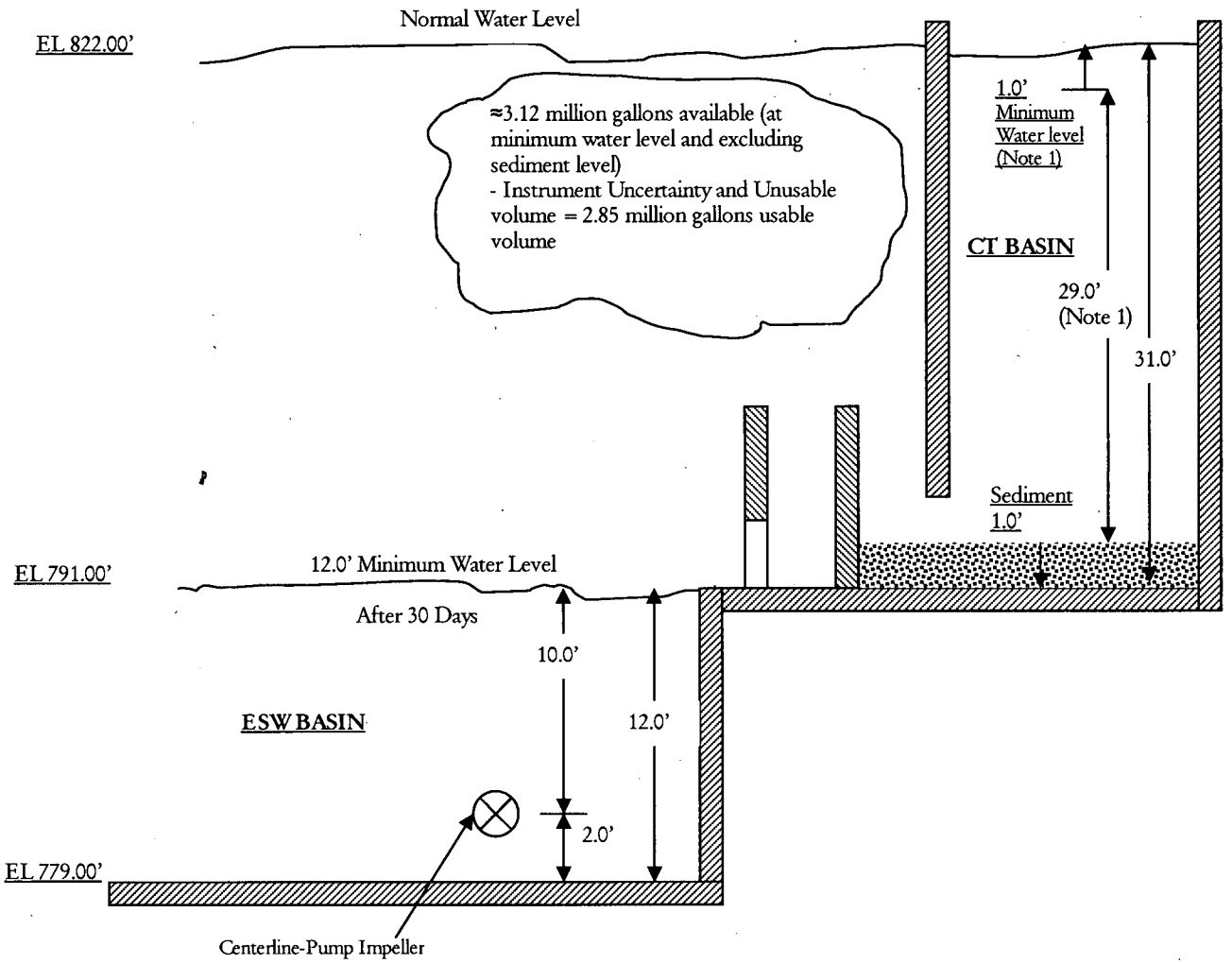

Note 1: Minimum water level related to Technical Specification SR 3.7.9.1 including margin will be defined during detailed design completion to ensure:

1) 2.85 millions gallon usable volume when considering instrument uncertainty and unusable volume; and
2) 12.0 ft minimum water level in ESW basin after 30 days assuring adequate NPSH

Figure 9.02.01-1

B 3.7 PLANT SYSTEMS

B 3.7.9 Ultimate Heat Sink (UHS)

BASES

BACKGROUND

The UHS provides a heat sink for processing and operating heat from safety related components during a transient or accident, as well as during normal operation. This is done by utilizing the Essential Service Water System (ESWS) and the Component Cooling Water (CCW) System.

The UHS consists of four 50 percent capacity mechanical draft cooling towers, one for each ESWS train. Each cooling tower consists of two cells with one fan per cell. The combined inventory of three of the four UHS basins provides a 30-day storage capacity as discussed in FSAR Chapter 9 (Ref. 1). Each unit is provided with its own independent UHS with no cross connection between the two units. The two principal functions of the UHS are the dissipation of residual heat after reactor shutdown, and dissipation of residual heat after an accident.

The basic performance requirements are that an adequate inventory of cooling water be available for 30 days without makeup, and that the design basis temperatures of safety related equipment not be exceeded. Each UHS basin provides 33-1/3 percent of the combined inventory for the 30-day storage capacity to satisfy the short-term recommendation of Regulatory Guide 1.27 (Ref. 2). There is one safety-related UHS transfer pump per UHS basin which is used to transfer water between the UHS basins.

The stored water level provides adequate net positive suction head (NPSH) to the ESW pump during a 30-day period of operation following the design basis LOCA without makeup. RCOL4_16-2

Additional information on the design and operation of the system, along with a list of components served, can be found in Reference 1.

ACTIONS (continued)

The Completion Times are reasonable based on the low probability of an accident occurring during the time allowed to restore the pump(s) or implement an alternate method, the availability of alternate methods, and the amount of time available to transfer the water from one basin to the other under the worst case accident assumptions.

~~D~~E.1 and ~~D~~E.2 RCOL4_16-4

If the Required Actions and Completion Times of Condition A, B, or C are not met, or the UHS is inoperable for reasons other than Condition A, B, or C, the unit must be placed in a MODE in which the LCO does not apply. To achieve this status, the unit must be placed in at least MODE 3 within 6 hours and in MODE 5 within 36 hours.

The allowed Completion Times are reasonable, based on operating experience, to reach the required unit conditions from full power conditions in an orderly manner and without challenging unit systems.

SURVEILLANCE REQUIREMENTS

SR 3.7.9.1

This SR verifies that adequate long term (30 day) cooling can be maintained. The specified level also ensures that sufficient NPSH is available to operate the ESWS pumps. The Surveillance Frequency is based on operating experience, equipment reliability, and plant risk and is controlled under the Surveillance Frequency Control Program. This SR verifies that each required UHS basin water level is ≥ 2,850,000 gallons. Plant procedures provide the corresponding water level to be verified to assure a usable volume of 2,850,00 gallons, accounting for unusable volume and measurement uncertainty. RCOL4_16-2

SR 3.7.9.2

This SR verifies that the ESWS is available to cool the CCW System and essential chiller unit to at least its maximum design temperature with the maximum accident or normal design heat loads for 30 days following a Design Basis Accident. The Surveillance Frequency is based on operating experience, equipment reliability, and plant risk and is controlled under the Surveillance Frequency Control Program. This SR verifies that the water temperature of the UHS is ≤ 95°F.

CP COL 9.5(2) Replace the last paragraph in DCD Subsection 9.2.1.2.1 with the following. CTS-00848

Each of the essential service water (ESW) lines in the reactor building (R/B) and in the UHS ESW pump house is tapped to supply water to the fire protection water supply system (FSS), if required, after the safe-shutdown earthquake (SSE). Manually operated locked closed valves are provided in each of the tapped connections to draw water for the FSS. CTS-00586

9.2.1.2.2 Component Description

CP COL 9.2(6) Replace the sentence in DCD Subsection 9.2.1.2.2 with the following.

Table 9.2.1-1R shows the design parameters of the major components in the system.

9.2.1.2.2.1 ESWPs

CP COL 9.2(6) Replace the second sentence of the third paragraph in DCD Subsection 9.2.1.2.2.1 with the following.

Total dynamic head (TDH) of the ESWP is 220 feet. Total calculated system head losses including static lift are approximately 190 feet. This provides ample margin. RCOL2_09.02.01-1
Available net positive suction head (NPSH) with the lowest expected water level (after 30 days of accident mitigation) in the basin is approximately 40 feet. Available NPSH is based on the lowest expected water level in the ESWP intake basin of approximately 12 feet and as 95 degrees F water temperature. RCOL2_09.02.01-1

9.2.1.3 Safety Evaluation

CP COL 9.2(1) Replace the twelfth paragraph in DCD Subsection 9.2.1.3 with the following.

Design of the basin provides adequate submergence of the pumps to assure the NPSH for the pumps. The basin is divided into two levels. One is approximately 12 feet lower than the other, and directly above it is installed the ESWP. The ESWP is designed to operate with the lowest expected water level (after 30 days of accident mitigation). The basins have sufficient water inventory to assure adequate cooling and NPSH for 30 days without makeup. This is discussed further in Subsection 9.2.5.

Recovery procedures contained in the Operating and Maintenance Procedures (see Subsection 13.5.2.1) are implemented if the UHS approaches low water level. DCD_09.02.01-30

CP COL 9.2(2) Replace the thirteenth paragraph in DCD Subsection 9.2.1.3 with the following.

c. Accumulative evaporation (gallons/cooling tower) is calculated by multiplying the evaporation rate (gpm) and its corresponding time interval.

d. The total water loss due to evaporation and drift for the 30 days period is calculated and is defined as the plant unit minimum required water capacity for the basin design in accordance with RG 1.27.

Based on the above analyses, the governing case for the maximum required 30 days cooling water capacity is two-train operation during LOCA condition, with a total required cooling water of approximately 8.54 million gallons. For the cooling tower design heat load the governing case is the safe shutdown conditions with LOOP for two-train operation, with a heat load of 196 million Btu/hr.

9.2.5.3 Safety Evaluation

CP COL 9.2(22) Replace the content of DCD Subsection 9.2.5.3 with the following.

The results of the UHS capability and safety evaluation are discussed in detail in Subsection 9.2.5.2.3 and in this Subsection. The UHS is capable of rejecting the heat under limiting conditions as discussed in Subsection 9.2.5.2.3.

The failure modes and effects analysis for the UHS are included in Table 9.2.5-202 and demonstrate that the UHS satisfies the single failure criteria.

The basin is designed to withstand the effect of natural phenomena, such as earthquake, tornado, hurricanes, and floods taken individually, without loss of capability to perform its safety function.

The combined volume of water in the three basins is sufficient to provide at least 30 days required cooling capacity.

The total required 30 days cooling water capacity is approximately 8.54 million gallons, or approximately 2.85 million gallons per cooling tower (CT) basin. Each basin dimension, not including any column or wall sections, is 120 feet x 120 feet with a water depth of 29 feet from the minimum maintained water level, the usable water volume available for each CT basin is approximately 3.12 million gallons. The water depth excludes one foot of unusable space from the basin floor, where sedimentation may accumulate. The CT basin volume of 2.85 million gallons does not include the water volume located in the ESWP intake basin below the CT basin. The ESWP pump intake basin water level maintains adequate pump NPSH under design basis conditions. RCOL2_09.02.01-1 RCOL2_09.02.01-1 RCOL2_09.02.01-1

During accident conditions, including LOCA and LOOP, makeup to the basin is presumed lost. During such conditions, the UHS transfer pump operates to permit the use of three of the four basin water volumes. The power supply for each transfer pump is from a different division than the ESWP and cooling tower in that basin. Therefore, loss of one electrical train does not compromise the ability to satisfy the short-term accident requirements.

RESPONSE TO REQUEST FOR ADDITIONAL INFORMATION

Comanche Peak, Units 3 and 4

Luminant Generation Company LLC

Docket Nos. 52-034 and 52-035

RAI NO.: 3698 (CP RAI #109)

SRP SECTION: 09.02.01 - STATION SERVICE WATER SYSTEM

QUESTIONS for Balance of Plant Branch 1 (AP1000/EPR Projects) (SBPA)

DATE OF RAI ISSUE: 10/2/2009

QUESTION NO.: 09.02.01-2

This Request for Additional Information (RAI) is necessary for the staff to determine if the application meets the requirements of General Design Criteria (GDC) 44.

The essential service water system (ESWS) must be capable of removing heat from systems, structures and components (SSCs) important to safety during normal operating and accident conditions over the life of the plant in accordance with General Design Criteria (GDC) 44 requirements. SRP Section 9.2.1, "Station Service Water System," Sections II and III provide guidance on the specific information that should be included in the application for evaluation by the staff.

US-APWR Design Control Document (DCD) COL 9.2(2) specifies that the COL Applicant should provide the protection against adverse environmental, operating, and accident conditions that can occur, such as freezing and thermal over pressurization. System freezing and thermal over pressurization are important considerations that can affect heat transfer to satisfy GDC 44. For this reason, the staff requests the following information as related to GDC 44:

A. FSAR Section 9.2.1.3, "Safety Evaluation," outlines measures for protection against adverse environmental conditions. Discuss in the FSAR the freeze protection procedures used to prevent freezing of the ESWS. For example, UHS transfer pumps or heat tracing would be placed into service during applicable cold weather months.

B. The concept of maintaining locked open valves (which are also shown on FSAR Figure 9.2.1-1R, "Essential Service Water System Piping and Instrumentation Diagram") adequately addresses the possibility of over pressurization. However, when these valves are closed for heat exchanger backflush, over pressurization was not adequately addressed by the applicant. Provide a discussion in the FSAR for the over pressurization protection when the locked open valves are closed for heat exchanger flushing.

ANSWER:

A. As noted in FSAR Subsection 9.2.1.3, UHS transfer pumps are used to circulate water in the idle basins. Plant procedures govern operating the pumps in this mode based on basin water and ambient temperatures. Heat tracing is provided as described in FSAR Subsection 9.2.1.3

and is automatically controlled by the ambient temperature-sensing thermostat in the vicinity of the piping. The heat tracing is activated when the thermostat senses a pre-set low temperature.

FSAR Subsection 9.2.1.3 has been revised to reflect this response.

B. The CCW heat exchanger back flush operation is described in DCD Subsection 9.2.1.2.2.6. The self-cleaning strainer located at each heat exchanger inlet minimizes clogging and need for back flushing. All valves around the CCW heat exchanger are administratively controlled.

Back flush operation for a typical train (A) is as follows (refer to the attached Figure 9.02.01-2). Heat exchanger (HX) inlet and outlet isolation valves VLV-514A and VLV-517A are closed and bypass valves VLV-531A and VLV-532A are opened. Water from the inlet of the HX inlet isolation valve VLV-514A flows through the bypass valve VLV-531A and in the HX from the discharge side. The water flows out of the HX from the inlet side to the bypass valve VLV-532A and then to the outlet side of the valve VLV-517A. Thus, the HX is not isolated during back flushing operation; cooling operation is continued and there will not be any overpressurization.

Subsection 9.2.1.3 has been revised to reflect this response.

Impact on R-COLA

See attached mark-up of FSAR Draft Revision 1 page 9.2-3.

Impact on S-COLA

None.

Impact on DCD

None.

Attachment

Figure 9.02.01-2, Excerpt from FSAR Figure 9.2.1-1R

RAI NO.: 3698 (CP RAI #109)
Question 09.02.01-2
Attachment

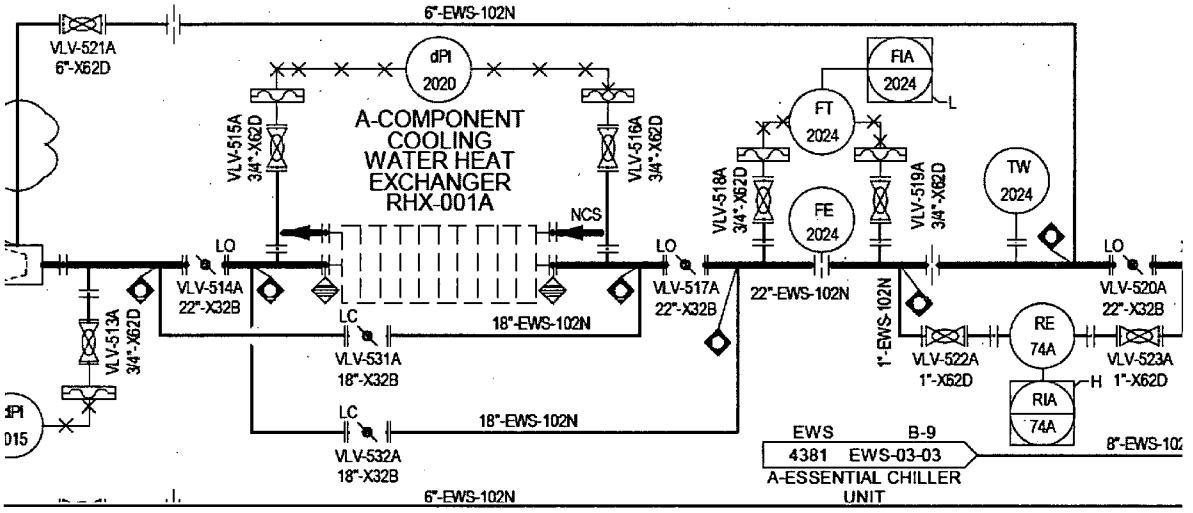

Figure 9.02.01-2, Excerpt from FSAR Figure 9.2.1-1R

The lowest ambient temperature anticipated at the site does not result in the freezing of the ESW in the basin or the piping for the following reasons:

- The basins are located below grade and thus ground temperature maintains water from freezing.
- In the operating trains, water is continuously circulated which helps to prevent freezing. Ultimate heat sink (UHS) transfer pumps can be used to circulate water from the idle basins. Plant procedures are developed to operate the pumps in this mode based on the basin water and ambient temperatures. RCOL2_09.02.01-2
- UHS ESW pump house ventilation system maintains pre determined minimum temperature in the pump house areas. This is further described in Subsection 9.4. CTS-00586
- Any exposed essential piping that may be filled with water while the pump is not operating is heat traced. The heat tracing is activated when the thermostat senses a pre-set low ambient temperature. RCOL2_09.02.01-2

For the thermal overpressure protection of the component cooling water heat exchanger ESW side, the valves located at the component cooling water heat exchanger ESW side inlet and outlet lines are administratively locked open valves. These locked open valves assure protection from the thermal overpressurization due to the erroneous valve operation coincident with the heat input from the component cooling water (CCW) side to ESW side. During backflush operation of the heat exchanger, essential service water flows from the discharge side of the heat exchanger and then exits from the inlet side to the discharge header. Cooling operation is continued and there is no overpressurization. RCOL2_09.02.01-2

CP COL 9.2(7) Replace the last two paragraphs in DCD Subsection 9.2.1.3 with the following. DCD_09.02.01-27

The ESWS serves as a backup source of water for the FSS in the R/B and in the ESWP house. This is in conformance with the requirement for an alternative fire protection water supply from a seismic category I water system in the event of a safe-shutdown earthquake, in accordance with RG 1.189. Two hose stations at approximately 150 gpm total take water from the ESWS for a maximum of two hours. Approximately 18,000 gallons is consumed by the FSS. The ESWS is not required to supply water to FSS during any other design basis event including LOCA. This water volume has minimal impact on the UHS water inventory and does not jeopardize the 30 day capacity requirement. Administratively locked closed valves in each of the fire protection water supply taps assure that water inventory loss is controlled. RCOL2_09.02.01-5

RESPONSE TO REQUEST FOR ADDITIONAL INFORMATION

Comanche Peak, Units 3 and 4

Luminant Generation Company LLC

Docket Nos. 52-034 and 52-035

RAI NO.: 3698 (CP RAI #109)

SRP SECTION: 09.02.01 - STATION SERVICE WATER SYSTEM

QUESTIONS for Balance of Plant Branch 1 (AP1000/EPR Projects) (SBPA)

DATE OF RAI ISSUE: 10/2/2009

QUESTION NO.: 09.02.01-3

This Request for Additional Information (RAI) is necessary for the staff to determine if the application meets the requirements of General Design Criteria (GDC) 4.

The essential service water system (ESWS) must be designed to the requirements of GDC 4 which includes the effects of missiles inside and outside containment, effects of pipe whip, jets, environmental conditions from high- and moderate-energy line-breaks, and dynamic effects of flow instabilities and attendant loads (e.g., water-hammer) during normal plant operation as well as upset or accident conditions.

US-APWR Design Control Document (DCD) COL 9.2(7) specifies that the COL Applicant should provide the piping, valves and other design of the ESWS related to the site specific conditions, including the safety evaluation. The acceptance for water hammer effects is based in part on vent design, consideration for voiding, and operating/maintenance procedures. The addition of the blowdown system introduces a new draindown path that has a potential for system voiding that has not been discussed in the application.

Provide a discussion in the Final Safety Analysis Report (FSAR) related to compliance to GDC 4 and how water hammer effects are addressed. Since the control valves remain open while in ESWS standby, describe how the control valves are maintained in system standby to avoid system draindown and voiding.

ANSWER:

DCD Subsection 9.2.1 (pages 9.2-1 through 9.2-4) addresses conformance of the ESWS with GDC 4. DCD changes in Revision 2 include increased detail regarding ESWS layout and operation to prevent adverse effects of water hammer.

The ESWS layout ensures that the fluid pressure in the system is above saturation conditions at all locations. Vents are provided at all high points in the system. The motor-operated valve (MOV) located in the discharge piping of each ESW pump is interlocked with pump operation. This interlock, together with the system layout, minimizes the potential for water hammer. Voiding may occur in any operating train upon pump trip and may also be present in an idle train. As the ESW pump starts, the discharge

MOV opens slowly, sweeping out air from the system piping to minimize the impact of potential water hammer forces. As revised in FSAR Update Tracking Report Revision 5 [see Luminant letter TXNB-09043 dated September 16, 2009 (ML092660250)], FSAR Subsection 9.2.1.2.1 requires adherence to filling and venting procedures to minimize the occurrence of water hammer. These procedures are part of the Operating and Maintenance procedures described in general in FSAR Subsection 13.5.2. RAI No. 3762 (CP RAI #121) Question 09.02.05-9 requests additional information regarding water hammer. The Luminant response to this question is due to the NRC by December 18, 2009 and is expected to include additional details and FSAR updates.

Heat exchanger isolation valves remain open in the ESWS standby train. However the MOV in the pump discharge piping remains closed. The CCW heat exchanger, the essential chiller, and the ESW pipe tunnel are located at (-26' 4") elevation. The cooling tower and the associated piping are located above ground. The system layout and the closed MOV in the discharge pipe will prevent draining the standby ESW train. Moreover, the low level alarm from the standby UHS basin should alert the operator of any malfunction.

The blowdown for each train is tapped from the ESW discharge piping in the pump house. This blowdown drains into the Circulating Water System blowdown. The operation of the blowdown control valve is remote-manually controlled by the operator. During normal operating conditions, UHS basin level is maintained via make-up from Lake Granbury and inventory loss or voiding via the blowdown line is not a concern. The blowdown control valves fail closed, and can be closed by remote-manual operation to prevent draining and water inventory loss during abnormal conditions. As noted in FSAR Subsection 9.2.5.5, the blowdown control valve closes automatically upon a low water level signal or emergency core cooling system actuation signal. Failure of the valve to close is indicated in the main control room. The blowdown system piping size (2 ½-inch diameter vs 24-inch diameter ESW pump discharge line) further limits the potential for excessive draining and voiding in the system.

Impact on R-COLA

None.

Impact on S-COLA

None.

Impact on DCD

None.

RESPONSE TO REQUEST FOR ADDITIONAL INFORMATION

Comanche Peak, Units 3 and 4

Luminant Generation Company LLC

Docket Nos. 52-034 and 52-035

RAI NO.: 3698 (CP RAI #109)

SRP SECTION: 09.02.01 - STATION SERVICE WATER SYSTEM

QUESTIONS for Balance of Plant Branch 1 (AP1000/EPR Projects) (SBPA)

DATE OF RAI ISSUE: 10/2/2009

QUESTION NO.: 09.02.01-4

This Request for Additional Information (RAI) is necessary for the staff to determine if the application meets the requirements discussed in Regulatory Guide 1.206 as they will appear in section II.E.3 of the appendix to 10 CFR Part 52 which specifies the approved design this application references, once the design is approved.

Regulatory Guide (RG) 1.206, "Combined License Applications for Nuclear Power Plants," Section C.III.4, "Combined License Action or Information Items," states in part that Appendices A–D to 10 CFR Part 52 set forth the design certification rules that specify the NRC's requirements for the certified reactor designs. An applicant may depart from or omit these items, provided that the departure or omission is identified and justified in the FSAR.

US-APWR Design Certification Document (DCD) COL item 9.2(7) specifies that the COL applicant should provide the piping, valves and other design of the Essential Service Water System (ESWS) related to the site specific conditions, including the safety evaluation. In Section 9.2.1.5.4, "ESWS Motor Essential Service Water Flow," the applicant removed the piping system and main control room flow rate indication and alarm of the ESW pump motor. This is inconsistent with the DCD Tier 2 Section 9.2.1.5.4 which requires that flow rate be indicated in the main control room (MCR) and a low flow alarm transmitted to the MCR. In addition, the staff understands that the COL has deleted the motor cooling function from the ESWS; however, the NRC staff considers this removed function to be a departure from the US-APWR standard plant design described in the DCD. The applicant did not identify this removed function as a departure and did not provide the evaluation of this departure using the 10CFR Part 52 criteria.

- Provide a revision to the COL FSAR identifying the removal of the flow rate indication and low flow alarm and the removal of the cooling water system to the ESWS pump motor as the departures.

- Provide an evaluation of the above departures using the applicable criteria of 10 CFR Part 52.

ANSWER:

The US-APWR ESW pump motor design has been changed from a water-cooled type to a site-specific type to be determined by the COL applicant and DCD Tier 2 Subsection 9.2.1.5.4 has been deleted. DCD COL item COL 9.2 (6) has been revised to require the COL applicant to specify the mode of ESWP motor cooling. DCD Subsection 9.2.1.2.2.1, Table 9.2.1-3, and Table 9.2.1-4 were revised in DCD Revision 2 to remove the ESWP motor cooling flow. DCD Figure 9.2.1-1, Sheet 1 has been further revised and Figure 9.2.1-1, Sheet 2 has been deleted to reflect removal of the ESWP motor cooling lines from the standard plant ESWS.

The revised US-APWR standard plant design does not require the ESWS to cool the pump motor. This function is deleted. Therefore, there is no departure from the standard design. The COLA FSAR has been revised to be consistent with the DCD changes described above. An air-cooled motor is used for the CPNPP Units 3 and 4 ESW pump. The UHS ESW Pump House Ventilation System described in FSAR Subsection 9.4.5.1.1.6 provides the required motor cooling.

Impact on R-COLA

See attached mark-up of FSAR Draft Revision 1 pages 1.8-42, 9.2-4, 9.2-13, 9.2-14, and 9.4-2.

Impact on S-COLA

None.

Impact on DCD

The changes to the DCD described above were provided in Mitsubishi Heavy Industries, Ltd. letter to the NRC, "Update of Chapter 9 of US-APWR DCD," dated November 17, 2009) (UAP-HF-09521).

CP COL 1.8(2)

Table 1.8-201 (Sheet 33 of 62)

Resolution of Combined License Items for Chapters 1 - 19

COL Item No.	COL Item	FSAR Location	Resolution Category	
COL 9.2(1)	The COL Applicant is to provide the evaluation of the ESWP at the lowest probable water level of the UHS. The COL Application is to develop recovery procedures in the event of approaching low water level of UHS.	9.2.1.3	3a	
COL 9.2(2)	The COL Applicant is to provide the protection against adverse environmental, operating, and accident conditions that can occur, such as freezing, thermal overpressurization. The COL Applicant is to provide the preventive measures for protection against adverse environmental conditions.	9.2.1.3	3a	
COL 9.2(3)	The COL Applicant is to determine source and location of the UHS.	9.2.5.2	3a	
COL 9.2(4)	The COL Applicant is to determine location and design of the ESW intake structure.	9.2.5.2	3a	
COL 9.2(5)	The COL Applicant is to determine location and design of the ESW discharge structure.	9.2.5.2	3a	
COL 9.2(6)	The COL Applicant is to provide ESWP design details – required total dynamic head, NPSH available, and the mode of cooling the pump motor. ~~etc.~~	9.2.1.2.2 9.2.1.2.2.1 Table 9.2.1-1R 9.4.5.1.1.6	3a	RCOL2_09.02.01-4
COL 9.2(7)	The COL Applicant is to provide the piping, valves, including those at the boundary between the safety-related and nonsafety-related portions, and other design of the ESWS related to the site specific conditions, including the safety evaluation.	9.2.1.2.1 9.2.1.3 ~~9.2.1.5.4~~ Figure 9.2.1-1R	3a	RCOL2_09.02.01-4

Specific design conditions such as maximum operating water temperature and required UHS water volume are described in detail in Subsections 9.2.5.2.3 and 9.2.5.3. DCD_09.02.01-27

9.2.1.5.4 ESWP motor essential service water flow

~~CP COL 9.2(7)~~ ~~Replace the content of DCD Subsection 9.2.1.5.4 with the following.~~ RCOL2_09.02.01-4

~~Not applicable to Comanche Peak Nuclear Power Plant (CPNPP) Units 3 and 4.~~

9.2.2.2.2 System Operations

DCD-09.02.02-26
DCD_09.02.02-37

STD COL 9.2(27) Replace the last paragraph in DCD Subsection 9.2.2.2.2 with the following.

The operating and maintenance procedures regarding water hammer are included in system operating procedures in Section 13.5.2.1. A milestone schedule for implementation of the procedures is also included in Subsection 13.5.2.1.

9.2.4.1 Design Bases

CP COL 9.2(10)
CP COL 9.2(11)

Replace the first and second bullet in DCD Subsection 9.2.4.1 with the following.

- The potable water system for CPNPP is designed to receive water from Somervell County Water District. The potable and sanitary water system pipes are fitted with backflow preventer to avoid chemical contamination. They are also physically separated from any radioactive sources, to prevent contamination. This assures that the water remains fit for human consumption and conforms to the requirements of GDC 60 (Reference 9.2.11-1).

- The receipt of potable water from Somervell County Water District conforms to the requirements of the Environmental Protection Agency "National Primary Drinking Water Standards," 40 CFR 141 (Reference 9.2.11-4). All state and local environmental protection standards are applied and followed, as these may be more stringent than federal requirements.

CP COL 9.2(9)
CP COL 9.2(15)

Replace the fourth bullet in DCD Subsection 9.2.4.1 with the following.

- The supply capacity of potable water is 50 gpm (approximately 70,000 gpd), sufficient to provide a quantity of potable water based on 20 gpd for

Temperature elements are provided in each basin and temperatures are indicated in the MCR.

Local flow rate and pressure indicators located in each UHS transfer pump discharge header are used for pump performance testing.

The cooling tower fan is equipped with vibration sensors that alarm in the control room in the event of high vibration.

9.2.7.2.1 Essential Chilled Water System

DCD_09.02.02-11

STD COL 9.2(27) Replace the last paragraph in DCD Subsection 9.2.7.2.1 with the following.

The operating and maintenance procedures regarding water hammer are included in system operating procedures in Subsection 13.5.2.1. A milestone schedule for implementation of the procedures is also included in Subsection 13.5.2.1.

9.2.10 Combined License Information

Replace the content of DCD Subsection 9.2.10 with the following.

CP COL9.2(1) ***9.2(1)*** *The evaluation of ESWP at the lowest probable water level of the UHS and the recovery procedures when UHS approaches low water level*

DCD_09.01.02-30

This COL item is addressed in Subsection 9.2.1.3.

CP COL 9.2(2) ***9.2(2)*** *The protection against adverse environmental, operating and accident condition that can occur such as freezing, thermal over pressurization*

This COL item is addressed in Subsection 9.2.1.3.

CP COL 9.2(3) ***9.2(3)*** *Source and location of the UHS*

This COL item is addressed in Subsection 9.2.5.2.

CP COL 9.2(4) ***9.2(4)*** *The location and design of the ESW intake structure*

This COL item is addressed in Subsection 9.2.5.2.

CP COL 9.2(5) ***9.2(5)*** *The location and the design of the discharge structure*

This COL item is addressed in Subsection 9.2.5.2.

CP COL 9.2(6) ***9.2(6)*** *The ESWP design details – required total dynamic head, NPSH available, and the mode of cooling the pump motor.*

RCOL2_09.02.01-4

This COL item is addressed in Subsection 9.2.1.2.2, 9.2.1.2.2.1, ~~and~~ Table 9.2.1-1R, and 9.4.5.1.1.6.

CP COL 9.2(7) ***9.2(7)*** *The design of ESWS related with the site specific UHS*

This COL item is addressed in Subsections 9.2.1.2.1, 9.2.1.3~~, 9.2.1.5.4~~ and Figure 9.2.1-1R. | RCOL2_09.02.01-4

CP COL 9.2(8) ***9.2(8)*** *The ESW specific chemistry requirements* | DCD_09.02.01-30

This COL item is addressed in Subsection 9.2.1.2.1.

CP COL 9.2(9) ***9.2(9)*** *The storage capacity and usage of the potable water*

This COL item is addressed in Subsections 9.2.4.1, 9.2.4.2.2.1, 9.2.4.2.2.2 and 9.2.4.2.2.3.

CP COL 9.2(10) ***9.2(10)*** *State and Local Department of Health and Environmental Protection Standards* | DCD_09.02.04-1

This COL item is addressed in Subsection 9.2.4.1.

CP COL 9.2(11) ***9.2(11)*** *Source of potable water to the site and the necessary required treatment*

This COL item is addressed in Subsections 9.2.4.1, 9.2.4.2.1 and Figure 9.2.4-1R.

CP COL 9.2(12) ***9.2(12)*** *Sanitary waste treatment*

This COL item is addressed in Subsections 9.2.4.1 and 9.2.4.2.1.

CP COL 9.2(13) ***9.2(13)*** *Supply of water (city or on-site wells of another) and the system*

operation.

This COL item is addressed in Subsections 9.2.4.2.3, 9.2.4.4 and 9.2.4.5.

CP COL 9.2(14) ***9.2(14)*** *Potable and sanitary water system components data*

This action is addressed in Subsections 9.2.4.2.1 and Table 9.2.4-1R.

CP COL 9.2(15) ***9.2(15)*** *Total number of people at the site, the usage capacity and sizing of the potable water tank and associated pumps.*

This COL item is addressed in Subsections 9.2.4.1, 9.2.4.2.2.1, 9.2.4.2.2.2 and 9.2.4.2.2.3.

CP COL 9.2(16) ***9.2(16)****Values to the component based on calculations* | DCD_09.02.04-2

This COL item is addressed in Table 9.2.4-1R.

CP COL 9.2(17) ***9.2(17)****Sanitary lift stations and the sizing the appropriate interfaces*

9.4.3.2.3 Main Steam/Feedwater Piping Area HVAC System

CP COL 9.4(4) Replace the second sentence of the first paragraph in DCD Subsection 9.4.3.2.3 with the following.

The capacity of cooling and heating coils that are affected by site specific conditions is shown in Table 9.4-201.

9.4.3.2.4 Technical Support Center HVAC System

CP COL 9.4(4) Replace the second sentence of the first paragraph in DCD Subsection 9.4.3.2.4 with the following.

The capacity of cooling and heating coils that are affected by site specific conditions is shown in Table 9.4-201.

9.4.5 Engineered Safety Feature Ventilation System

CP COL 9.4(6) Delete the third paragraph and insert the following text to the end of the list of ESF ventilation systems in first paragraph of DCD Subsection 9.4.5.

- UHS ESW Pump House Ventilation System

CP COL 9.4(6) Add the following new subsection after DCD Subsection 9.4.5.1.1.5.

9.4.5.1.1.6 UHS ESW Pump House Ventilation System

The UHS ESW pump house ventilation system provides and maintains the proper environmental conditions within the required temperature range (40°F – 120°F) to support the operation of the instrumentation and control equipment and components in the individual UHS ESW pump houses during a design basis accident and LOOP with outside ambient design temperature condition of 0% temperature exceedance values.

The ESWP is installed at a location in the pump house where cooling air is adequately being circulated for cooling the ESWP motor. RCOL2_09.02.01-4

RESPONSE TO REQUEST FOR ADDITIONAL INFORMATION

Comanche Peak, Units 3 and 4

Luminant Generation Company LLC

Docket Nos. 52-034 and 52-035

RAI NO.: 3698 (CP RAI #109)

SRP SECTION: 09.02.01 - STATION SERVICE WATER SYSTEM

QUESTIONS for Balance of Plant Branch 1 (AP1000/EPR Projects) (SBPA)

DATE OF RAI ISSUE: 10/2/2009

QUESTION NO.: 09.02.01-5

This Request for Additional Information (RAI) is necessary for the staff to determine if the application meets the requirements discussed in Regulatory Guide 1.206 as they will appear in section II.E.3 of the appendix to 10 CFR Part 52 which specifies the approved design this application references, once the design is approved.

Regulatory Guide (RG) 1.206, "Combined License Applications for Nuclear Power Plants," Section C.III.4, "Combined License Action or Information Items," states in part that Appendices A–D to 10 CFR Part 52 set forth the design certification rules that specify the NRC's requirements for the certified reactor designs. An applicant may depart from or omit these items, provided that the departure or omission is identified and justified in the FSAR.

US-APWR Design Certification Document (DCD) COL 9.5(2) specifies that the COL applicant should address the design and fire protection aspects of the facilities, buildings and equipments, such as cooling towers and a fire protection water supply system, which are site specific and/or are not a standard feature of the US-APWR. FSAR Section 9.2.1.3, "Safety Evaluation," provides a new paragraph to replace DCD Section 9.2.1.3 that describes the ESWS as a backup source of water for fire protection service system (FSS) hoses stations in the RB and ESWP house. This is considered a new function of the ESWS that is a change from the DCD design for all four trains of ESWS. The NRC staff considers this new function to be a departure from the US-APWR standard plant design described in the DCD. The applicant is requested to identify this additional function as a departure and provide the evaluation of this departure using the 10 CFR Part 52 criteria.

- Provide a revision to the COL FSAR identifying the cooling water system has been modified to accommodate FSS to the RB and to the ESWS pump house as a departure and provide an evaluation using the applicable criteria of 10 CFR Part 52.

- FSAR Figure 9.2.1-1R, "Essential Service Water System Piping and Instrumentation Diagram," does not graphically show that these normally locked closed (LC) valves are connected to FSS hose stations. Revise FSAR to correctly show a hose or flange connection downstream of the LC valves.

ANSWER:

DCD Subsection 9.2.1.1.2 states that the ESWS does not provide cooling water to any non safety-related component. The DCD is being further revised to clarify the use of ESWS as a potential backup source of the fire protection water supply system (FSS) for the US-APWR standard plant. Therefore, the use of the ESWS for this purpose at CPNPP Units 3 and 4 is not a departure.

US-APWR DCD Tier 2 Subsection 9.5.1.2.4 states:

> The standpipe system for manual firefighting in areas containing equipment required for safe-shutdown is designed and supported so that it can withstand the effects of a SSE and remain functional. The standpipe can be isolated from its normal water source after a SSE and the standpipe can be aligned to an alternate safety-related water source with a capacity of at least 18,000 gallons. The COL Applicant is responsible to provide the specific alternate safety-related water source (See COL item 9.5(2)).

CPNPP Units 3 and 4 will use the ESWS as a backup to the FSS to address COL Item 9.5(2).

As noted in FSAR Subsection 9.2.1.3, the ESWS provides water to the FSS after the safe shutdown earthquake (SSE). The ESWS is not required to supply water to the FSS during any other design basis events including LOCA. The UHS water inventory required for 30 days without make up is not affected by this provision. The ESW pump design capacity of 13,000 gpm has ample margin to provide an additional 150 gpm for two hours. FSAR Subsection 9.2.1.3 has been revised to clarify this.

As noted in FSAR Figure 9.2.1-1R, normally locked closed valves are the boundary between the ESWS and the FSS. Attached Figure 9.02.01-3 shows an example of the interface between the ESWS and FSS. Piping downstream of the locked closed, equipment class (EC) 3 ESWS valves, is part of the FSS (EC7 as shown in Figure 9.02.01-3). FSAR Figure 9.5.1-201 will be revised to show the FSS interface with ESWS.

Impact on R-COLA

See attached mark-up of FSAR Draft Revision 1 page 9.2-3.

Impact on S-COLA

None.

Impact on DCD

The changes to the DCD described above were provided in Mitsubishi Heavy Industries, Ltd. letter to the NRC, "Update of Chapter 9 of US-APWR DCD," dated November 17, 2009) (UAP-HF-09521).

Attachment

Figure 9.02.01-3, Typical ESWS – FSS Interface

RAI NO.: 3698 (CP RAI #109)
Question 09.02.02-5
Attachment

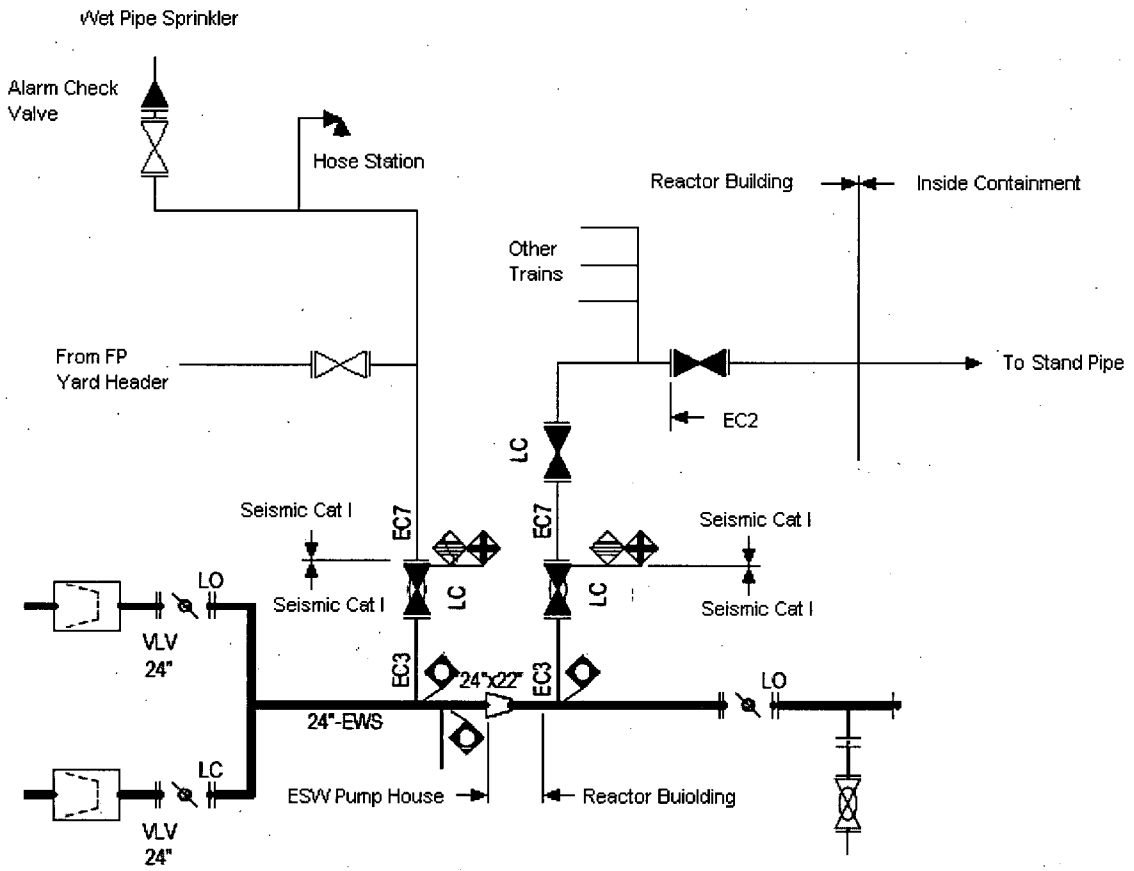

Figure 9.02.01-3, Typical ESWS – FSS Interface

The lowest ambient temperature anticipated at the site does not result in the freezing of the ESW in the basin or the piping for the following reasons:

- The basins are located below grade and thus ground temperature maintains water from freezing.
- In the operating trains, water is continuously circulated which helps to prevent freezing. Ultimate heat sink (UHS) transfer pumps can be used to circulate water from the idle basins. Plant procedures are developed to operate the pumps in this mode based on the basin water and ambient temperatures. RCOL2_09.02.01-2
- UHS ESW pump house ventilation system maintains pre determined minimum temperature in the pump house areas. This is further described in Subsection 9.4. CTS-00586
- Any exposed essential piping that may be filled with water while the pump is not operating is heat traced. The heat tracing is activated when the thermostat senses a pre-set low ambient temperature. RCOL2_09.02.01-2

For the thermal overpressure protection of the component cooling water heat exchanger ESW side, the valves located at the component cooling water heat exchanger ESW side inlet and outlet lines are administratively locked open valves. These locked open valves assure protection from the thermal overpressurization due to the erroneous valve operation coincident with the heat input from the component cooling water (CCW) side to ESW side. During backflush operation of the heat exchanger, essential service water flows from the discharge side of the heat exchanger and then exits from the inlet side to the discharge header. Cooling operation is continued and there is no overpressurization. RCOL2_09.02.01-2

CP COL 9.2(7) Replace the last two paragraphs in DCD Subsection 9.2.1.3 with the following. DCD_09.02.01-27

The ESWS serves as a backup source of water for the FSS in the R/B and in the ESWP house. This is in conformance with the requirement for an alternative fire protection water supply from a seismic category I water system in the event of a safe-shutdown earthquake, in accordance with RG 1.189. Two hose stations at approximately 150 gpm total take water from the ESWS for a maximum of two hours. Approximately 18,000 gallons is consumed by the FSS. The ESWS is not required to supply water to FSS during any other design basis event including LOCA. This water volume has minimal impact on the UHS water inventory and does not jeopardize the 30 day capacity requirement. Administratively locked closed valves in each of the fire protection water supply taps assure that water inventory loss is controlled. RCOL2_09.02.01-5