WOLF CREEK
NUCLEAR OPERATING CORPORATION

Matthew W. Sunseri
Vice President Operations and Plant Manager

November 11, 2009
WO 09-0040

U. S. Nuclear Regulatory Commission
ATTN: Document Control Desk
Washington, D. C. 20555

Reference: Letter WO 08-0014, dated June 6, 2008, from M. W. Sunseri, WCNOC, to the USNRC

Subject: Docket No. 50-482: Licensee Event Report 2008-004-01, Loss of Power Event When the Reactor was Defueled

Gentlemen,

The Reference submitted Licensee Event Report (LER) 2008-004-00 in accordance with 10 CFR 50.73(a)(2)(iv)(A) regarding a loss of power event. During the Nuclear Regulatory Commission (NRC) quarterly baseline exit meeting on October 14, 2009, it was identified that the failure to report this event under 10 CFR 50.73(a)(2)(v) was being considered as a potential finding. After further consideration, Wolf Creek Nuclear Operating Corporation determined that the reporting criteria in 10 CFR 50.73(a)(2)(v)(D) are also applicable for an event or condition that could have prevented the fulfillment of a safety function of structures or systems that are needed to mitigate the consequences of an accident. In addition, this revision includes the actions taken as a result of this event and provides a reference to a subsequent loss of power event. Changes are annotated in the margins.

This letter contains no commitments. If you have any questions concerning this matter, please contact me at (620) 364-4008, or Mr. Richard D. Flannigan, Manager Regulatory Affairs at (620) 364-4117.

Sincerely,

M W Sunseri

Matthew W. Sunseri

MWS/rlt

Enclosure

cc: E. E. Collins (NRC), w/e
G. B. Miller (NRC), w/e
B. K. Singal (NRC), w/e
Senior Resident Inspector (NRC), w/e

IE22
NRR

NRC FORM 366 (9-2007) U.S. NUCLEAR REGULATORY COMMISSION

APPROVED BY OMB: NO. 3150-0104 EXPIRES: 08/31/2010

Estimated burden per response to comply with this mandatory collection request: 80 hours. Reported lessons learned are incorporated into the licensing process and fed back to industry. Send comments regarding burden estimate to the Records and FOIA/Privacy Service Branch (T-5 F52), U.S. Nuclear Regulatory Commission, Washington, DC 20555-0001, or by internet e-mail to infocollects@nrc.gov, and to the Desk Officer, Office of Information and Regulatory Affairs, NEOB-10202, (3150-0104), Office of Management and Budget, Washington, DC 20503. If a means used to impose an information collection does not display a currently valid OMB control number, the NRC may not conduct or sponsor, and a person is not required to respond to, the information collection.

LICENSEE EVENT REPORT (LER)

(See reverse for required number of digits/characters for each block)

1. FACILITY NAME	2. DOCKET NUMBER	3. PAGE
WOLF CREEK GENERATING STATION	05000 482	1 OF 5

4. TITLE
Loss of Offsite Power Event When the Reactor Was De-fueled

5. EVENT DATE			6. LER NUMBER			7. REPORT DATE			8. OTHER FACILITIES INVOLVED	
MONTH	DAY	YEAR	YEAR	SEQUENTIAL NUMBER	REV NO.	MONTH	DAY	YEAR	FACILITY NAME	DOCKET NUMBER 05000
04	07	2008	2008	- 004 -	01	11	11	2009	FACILITY NAME	DOCKET NUMBER 05000

9. OPERATING MODE
De-fueled

10. POWER LEVEL
000

11. THIS REPORT IS SUBMITTED PURSUANT TO THE REQUIREMENTS OF 10 CFR§: *(Check all that apply)*

☐ 20.2201(b)	☐ 20.2203(a)(3)(i)	☐ 50.73(a)(2)(i)(C)	☐ 50.73(a)(2)(vii)
☐ 20.2201(d)	☐ 20.2203(a)(3)(ii)	☐ 50.73(a)(2)(ii)(A)	☐ 50.73(a)(2)(viii)(A)
☐ 20.2203(a)(1)	☐ 20.2203(a)(4)	☐ 50.73(a)(2)(ii)(B)	☐ 50.73(a)(2)(viii)(B)
☐ 20.2203(a)(2)(i)	☐ 50.36(c)(1)(i)(A)	☐ 50.73(a)(2)(iii)	☐ 50.73(a)(2)(ix)(A)
☐ 20.2203(a)(2)(ii)	☐ 50.36(c)(1)(ii)(A)	☒ 50.73(a)(2)(iv)(A)	☐ 50.73(a)(2)(x)
☐ 20.2203(a)(2)(iii)	☐ 50.36(c)(2)	☐ 50.73(a)(2)(v)(A)	☐ 73.71(a)(4)
☐ 20.2203(a)(2)(iv)	☐ 50.46(a)(3)(ii)	☐ 50.73(a)(2)(v)(B)	☐ 73.71(a)(5)
☐ 20.2203(a)(2)(v)	☐ 50.73(a)(2)(i)(A)	☐ 50.73(a)(2)(v)(C)	☐ OTHER
☐ 20.2203(a)(2)(vi)	☐ 50.73(a)(2)(i)(B)	☒ 50.73(a)(2)(v)(D)	Specify in Abstract below or in NRC Form 366A

12. LICENSEE CONTACT FOR THIS LER

FACILITY NAME	TELEPHONE NUMBER (Include Area Code)
Richard D. Flannigan, Manager Regulatory Affairs	(620) 364-4117

13. COMPLETE ONE LINE FOR EACH COMPONENT FAILURE DESCRIBED IN THIS REPORT

CAUSE	SYSTEM	COMPONENT	MANU-FACTURER	REPORTABLE TO EPIX	CAUSE	SYSTEM	COMPONENT	MANU-FACTURER	REPORTABLE TO EPIX
A	FK	BKR	G080	No					

14. SUPPLEMENTAL REPORT EXPECTED		15. EXPECTED SUBMISSION DATE	MONTH	DAY	YEAR
☐ YES *(If yes, complete 15. EXPECTED SUBMISSION DATE)*	☒ NO				

ABSTRACT *(Limit to 1400 spaces, i.e., approximately 15 single-spaced typewritten lines)*

On 4/7/2008, during the Wolf Creek Generating Station (WCGS) refueling outage, work was on-going in the WCGS Switchyard. At 1017, a loss of offsite power (LOOP) event was initiated when a relay technician, performing transmission line transfer/breaker failure trip preventative maintenance testing on a 345 kV breaker, closed the wrong set of trip links.

The "B" emergency diesel generator (EDG) automatically started and provided the electrical power needed for safety related equipment. At the time of the LOOP, all of the reactor fuel had been off-loaded from the core and was being stored in the spent fuel pool.

The control room staff declared a Notification of Unusual Event (NUE). Offsite power was restored at 1024 and the NUE was exited at 1250 on 4/7/2008, when the EDG was manually shut down.

1. FACILITY NAME	2. DOCKET	6. LER NUMBER			3. PAGE
		YEAR	SEQUENTIAL NUMBER	REV NO.	
WOLF CREEK GENERATING STATION	05000 482	2008	-- 004 --	01	2 OF 5

NARRATIVE

PLANT CONDITIONS PRIOR TO EVENT:

MODE - De-fueled
Power- 000

BACKGROUND:
(Refer to Diagram on page 5 of 5)

The Kansas Gas and Electric and Kansas City Power and Light transmission systems serve as the main outlet and source of offsite power for Wolf Creek Generating Station (WCGS). Connection of the station output to the system is achieved via a 345-kV overhead line from the plant yard to the Wolf Creek 345-kV switchyard [EIIS Code: FK]. There are three 345-kV lines connecting the WCGS 345-kV Substation to the area transmission system. The three lines are as follows:

a. WCGS-LaCygne 345-kV Line:
58 miles long, connecting to the LaCygne Steam Electric Station which has three additional 345-kV lines.

b. WCGS-Rose Hill 345-kV Line:
98 miles long, connecting to the Rose Hill Substation southeast of Wichita. Rose Hill Substation has two additional 345-kV connections.

c. WCGS-Benton 345-kV Line: 90 miles long, connecting to the Benton Substation northeast of Wichita. Benton Substation has two additional 345-kV lines, one of which is to the Wichita 345-kV Substation, near the Gordon Evans Steam Electric Station.

If one of the three 345-kV lines faulted, the breakers located at WCGS Substation would trip, deenergizing the line. Any one of the two remaining incoming 345-kV transmission lines at Wolf Creek Substation can carry the total Engineered Safety Features (ESF) load required for safe shutdown by controlled switching of the Wolf Creek substation breakers, providing a separate transmission line feeding each ESF transformer.

Two physically independent sources of offsite power are brought to the onsite power system. One circuit is fed from ESF transformer XNB01 and supplies power normally to its associated 4.16-kV Class 1E bus [EIIS Code: EK]. The other circuit is fed from one secondary winding of the startup transformer (S/U), through ESF transformer XNB02, and supplies power normally to its associated 4.16-kV Class IE bus. In addition, each offsite power circuit can be manually aligned to supply power to the opposite or both 4.16-kV Class IE busses, if required. Each of these offsite power circuits is designed to be available in sufficient time to ensure that specified acceptable fuel design limits and design conditions of the reactor coolant pressure boundary are not exceeded following a loss of all onsite power sources and the remaining offsite power circuit.

EVENT DESCRIPTION:

At 1017 on 4/7/2008, during the Refuel 16 Outage, work that was on-going in the WCGS Switchyard inadvertently caused a loss of offsite power (LOOP). The LOOP event was initiated when a Westar Senior Relay technician, from

one of WCGS owner companies, closed the wrong set of trip links on a 345 kV breaker during the Rose Hill transmission line transfer/breaker failure trip preventative maintenance (PM) testing. Instead of closing the Rose Hill transmission line trip links, the technician closed the Plant Startup (PSU) primary and backup trip links, which are associated to the WCGS startup transformer protection. When the links were closed, the breaker failure circuitry associated to the startup transformer was enabled. With the incorrect links in service and when the manual trip signal was generated as a part of the PM activity, the remaining off-site power connections to the West 345 kV bus were de-energized by the opening of their associated breakers. This inadvertent action tripped the West 345 kV bus and caused the LOOP.

The "A" emergency diesel generator (EDG) [EIIS Code: DG) and the "A" safety bus was out of service for maintenance. The "B" EDG automatically started and provided the electrical power needed for safety related equipment. At the time of the LOOP, all of the reactor fuel had been off-loaded from the core and was being stored in the spent fuel pool [EIIS Code: DA). Spent fuel pool cooling was temporarily interrupted until Operations personnel restarted the spent fuel pool cooling pump at 1038, after the "B" EDG restored power.

Power for the safety related equipment was restored from offsite power by 1024 on 4/7/2008. The "B" EDG was manually shut down at 1249 on 4/7/2008.

As a result of the loss of offsite power, the control room staff entered the emergency plan and declared a Notification of Unusual Event (NUE). When offsite power was restored and the EDG shut down, the NUE was exited at 1250 on 4/7/2008. Plant safety was maintained at all times throughout the event and there were no injuries.

BASIS FOR REPORTABILITY:

The actuation of Engineered Safety Features (ESF) described in this event is reportable per 10 CFR 50.73(a)(2)(iv)(A), which requires reporting of "Any event or condition that resulted in manual or automatic actuation of any of the systems listed in paragraph (a)(2)(iv)(B) of this section." Paragraph (B)(8) of 10 CFR 50.73(a)(2)(iv) includes "Emergency ac electrical power systems, including: emergency diesel generators (EDGs).."

This event is also considered reportable pursuant to 10 CFR 50.73(a)(2)(v)(D) as an event or condition that could have prevented the fulfillment of the safety function of structures or systems that are needed to mitigate the consequences of an accident. Specifically, the guidance in NUREG-1022, Rev.2, "Event Reporting Guidelines," states: "Both offsite electrical power (transmission lines) and onsite emergency power (usually diesel generators) are considered to be separate functions by GDC-17. If either offsite power or onsite emergency power is unavailable to the plant, it is reportable regardless of whether the other system is available. GDC-17 defines the safety function of each system as providing sufficient capacity and capability, etc., assuming that the other system is not available."

Reporting of this event pursuant to 10 CFR 50.73(a)(2)(v)(D) necessitates reporting the event as a Safety System Functional Failure in the associated NRC Performance Indicator for the fourth quarter of 2009.

ROOT CAUSE:

The cause of the LOOP was initiated by a human performance error. A Westar Senior Relay Technician inadvertently closed the wrong set of failure trip links (Plant Startup (PSU) breaker failure links) on a Switchyard breaker during the Rose Hill transmission line transfer/breaker failure trip testing PM activities.

1. FACILITY NAME	2. DOCKET	6. LER NUMBER			3. PAGE
		YEAR	SEQUENTIAL NUMBER	REV NO.	
WOLF CREEK GENERATING STATION	05000 482	2008	-- 004 --	01	4 OF 5

CORRECTIVE ACTIONS:

Interim Actions:

The Outage Control Center suspended Switchyard work, with the exception of concrete pads being poured. It was determined that the work on the concrete pads was not in close proximity to electrical equipment and could not create additional risk.

Actions Taken:

Power for the safety related equipment was restored from offsite power and the emergency diesel generator was shut down.

Revisions to procedure AP 21C-001, "WCGS/Westar Substation," were completed to provide for improved interface during work activities in the switchyard. Procedure revisions made included the following:

- Requirement for direct oversight of critical work activities.
- Requirement for a designated WCNOC person as the Switchyard Coordinator for liaison between Westar and WCNOC.
- Requirement for Westar work orders/instructions that involve WCGS switchyard work activities contain sufficient and specific details for successful completion of the work activity.

SAFETY SIGNIFICANCE:

The Outage Control Center performed a shutdown risk assessment the morning of 4/7/2008 at approximately 0400. This was prior to the LOOP incident. The shutdown safety risk condition for the plant was Risk condition 2. Risk condition 2 indicates a moderate risk. There is a reduction in the equipment available for satisfying a shutdown safety function because of electrical power resources and decay heat removal.

The entire core was in the Spent Fuel Pool (SFP) and the SFP water inventory was full. The plant-operating mode was de-fueled. The Reactor Coolant System (RCS) pressure was 0 psig and the RCS temperature was 75 degrees F. The SFP time to boil was greater than 8.06 hours. Cooling to the SFP was restored in 21 minutes and the temperature rise of the SFP during the event was 2.3 degrees F. Diverse means for SFP make-up were available during the event. The diesel fire pump and "B" essential service water pump started and ran successfully during the event.

OPERATING EXPERIENCE/PREVIOUS EVENTS:

A review of recent WCGS plant events (LERs) involving a loss of off-site power produced three events, LERs 1995-006-00, 1999-005-00 and 2004-003-00. The events were not similar because it was determined that one off-site source was available and both diesels were available in each event and the causes were either equipment failure or small animal intrusion related faults. LER 2009-002-00 was submitted subsequent to this event and involved a loss of off-site power due a lightening strike on the LaCygne 345 kV line and subsequent loss of the Rose Hill and Benton 345 kV lines. This event was not similar as the plant was operating in MODE 1 and the event was initiated as a result of a natural phenomenon.

1. FACILITY NAME	2. DOCKET	6. LER NUMBER			3. PAGE
		YEAR	SEQUENTIAL NUMBER	REV NO.	
WOLF CREEK GENERATING STATION	05000 482	2008	-- 004 --	01	5 OF 5

DIAGRAM

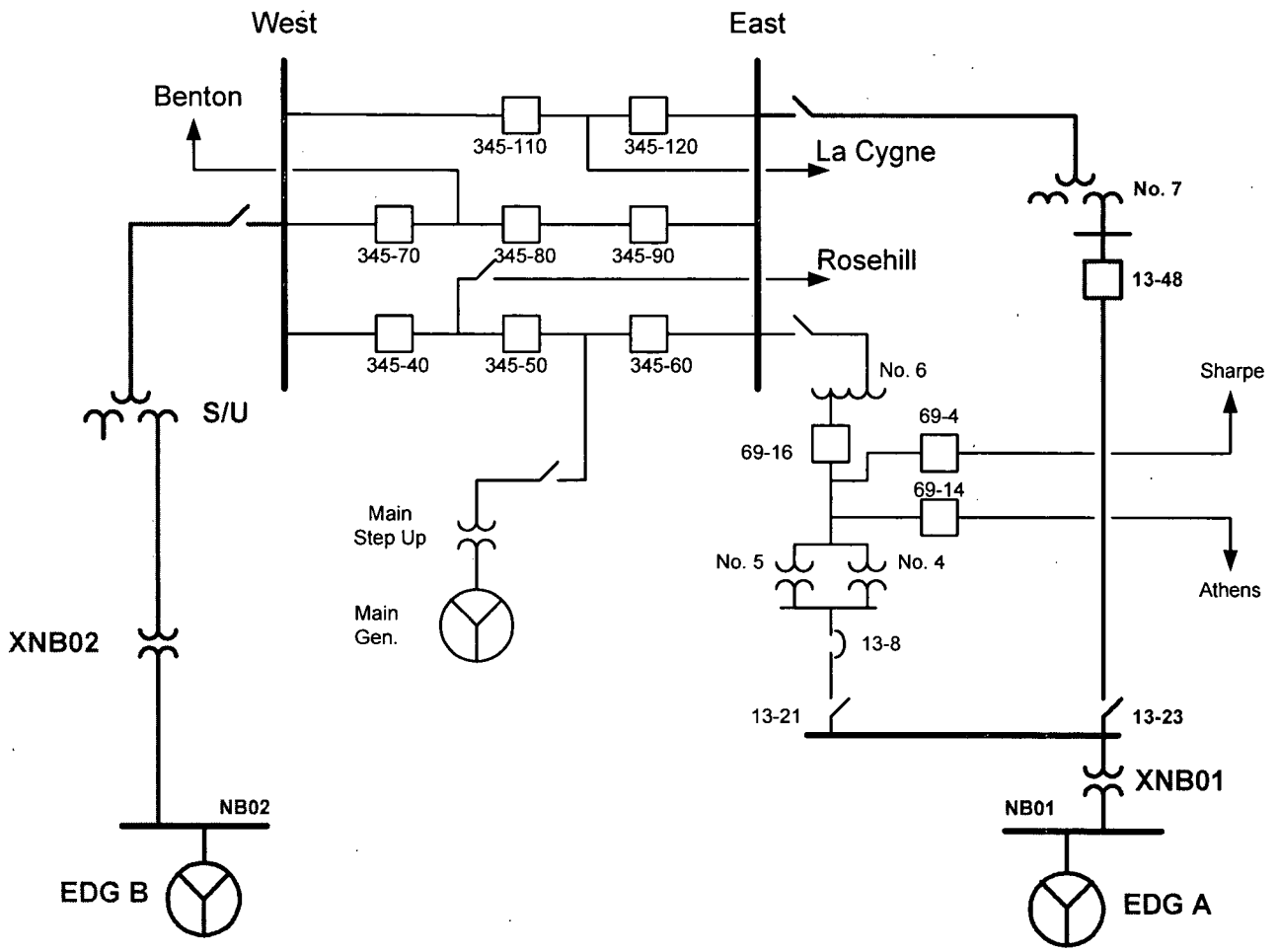

ONE LINE DIAGRAM