September 23, 2009

NAC Presentation of the UNITAD Storage & Transport Systems

DOE's Transportation, Aging and Disposal (TAD) Canister-Based System

NAC INTERNATIONAL

NAC International Is a Wholly Owned Subsidiary of USEC Inc.,
a Leading Supplier of Enriched Uranium Fuel for Commercial Nuclear Power Plants

Agenda

- Introductions and Project Overview - Tom Danner
- UNITAD System Design Overview - Gary Tjersland
- Structural/Thermal Analyses - Mike Yaksh
- Criticality/Shielding Analyses - Holger Pfeifer
- System Operations - Gary Tjersland
- Licensing Overview - Tony Patko
- Questions

NAC INTERNATIONAL

UNITAD System Design Overview

NAC INTERNATIONAL

UNITAD System Design Overview

- UNITAD is NAC's TAD Canister-based System for both storage and transportation of PWR fuel
- UNITAD applications are Amendments to the NRC Certified NAC-UMS System
- UNITAD design builds on the proven NRC certified NAC system designs:
  - "tube and disk" fuel basket;
  - leaktight canister with single closure lid;
  - robust vertical concrete storage cask with a carbon steel base and liner assembly;
  - multi-walled stainless steel/lead transportation cask;
  - balsa wood and redwood impact limiters

NAC INTERNATIONAL

Major UNITAD System Components

Component	10 CFR 71 Transport	10 CFR 72 Storage
Canister & Basket	YES	YES
Transfer Cask	--------	YES
Concrete Cask	--------	YES – VCC
Transport Cask	YES	--------
Transport Skid	YES	--------

NAC INTERNATIONAL

UNITAD Canister Design Overview

- UNITAD Canister is the critical component in the overall system performance for loading, storage, transport, aging and disposal
- Canister and basket structural components are all ASME SA240 stainless steel materials
- Fuel basket uses mechanically assembled borated stainless steel (BSS) tubes as neutron absorber for criticality control

UNITAD Canister Design Overview

- Canisters provided in two cavity lengths (173 & 183 inches) to accommodate various PWR fuel lengths
- Overall canister lengths are 189 and 199 inches including the universal lift fixture which is installed for transport
- Maximum canister diameter is 66.5 inches with a shell thickness of 0.5 inch to satisfy DOE dimensional requirements

UNITAD Canister Design Overview

- Canister provides an all-welded, stainless steel confinement and containment vessel designed and analyzed to ASME Code, Section III, Subsection NB
- Canister is designed for ease of fabrication, use and operation based on the NAC UMS System
- The single closure lid design minimizes operator dose, and reduces welding and NDE times and exposures

UNITAD Canister/Basket – Cutaway View

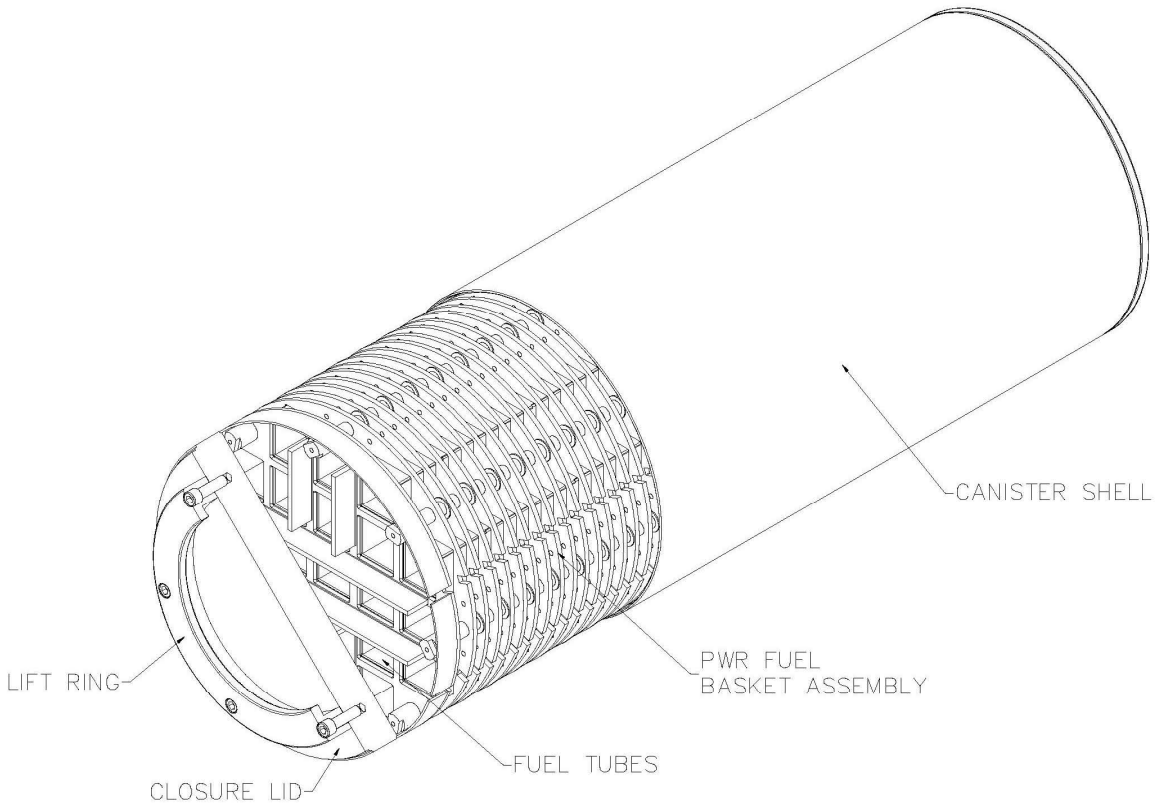

NAC INTERNATIONAL

UNITAD Basket Design Overview

- Fuel basket uses alternating 1-inch thick stainless steel structural disks and aluminum heat transfer disks retained on stainless steel tie-rod assemblies
- Structural disks and stainless steel upper and lower weldments retain and position the BSS fuel tubes
- Canister and basket assemblies provided in two cavity lengths to meet plant facility limitations on system height and weight

UNITAD Basket Design Overview

- 21-PWR basket design is based on currently certified UMS 24-PWR basket design
- Basket utilizes the proven “flux-trap” and “tube-and-disk” of the UMS and MPC basket designs
- Basket assembly is designed and analyzed in accordance with ASME Code Section III, Subsection NG

UNITAD Storage Cask (VCC) Design Overview

NAC INTERNATIONAL

UNITAD VCC Design Overview

- Vertical Concrete Cask (VCC) is the storage overpack used at ISFSI
- Provides passive structural support, heat dissipation, biological shielding, and protection from environmental and site accident conditions
- Designed and constructed in accordance with ACI-349 and ACI-318

UNITAD VCC Design Overview

- UNITAD VCC based on proven NAC VCC designs (UMS and MAGNASTOR) and analysis methodologies.
- UNITAD VCC essentially identical to UMS/MPC and MAGNASTOR VCC designs: loaded and handled vertically; loaded weight limited to <175 tons; shield design to be ALARA to lower off-site doses
- UNITAD VCC designed to meet all NRC regulatory and DOE TAD specification requirements

UNITAD VCC Design Overview

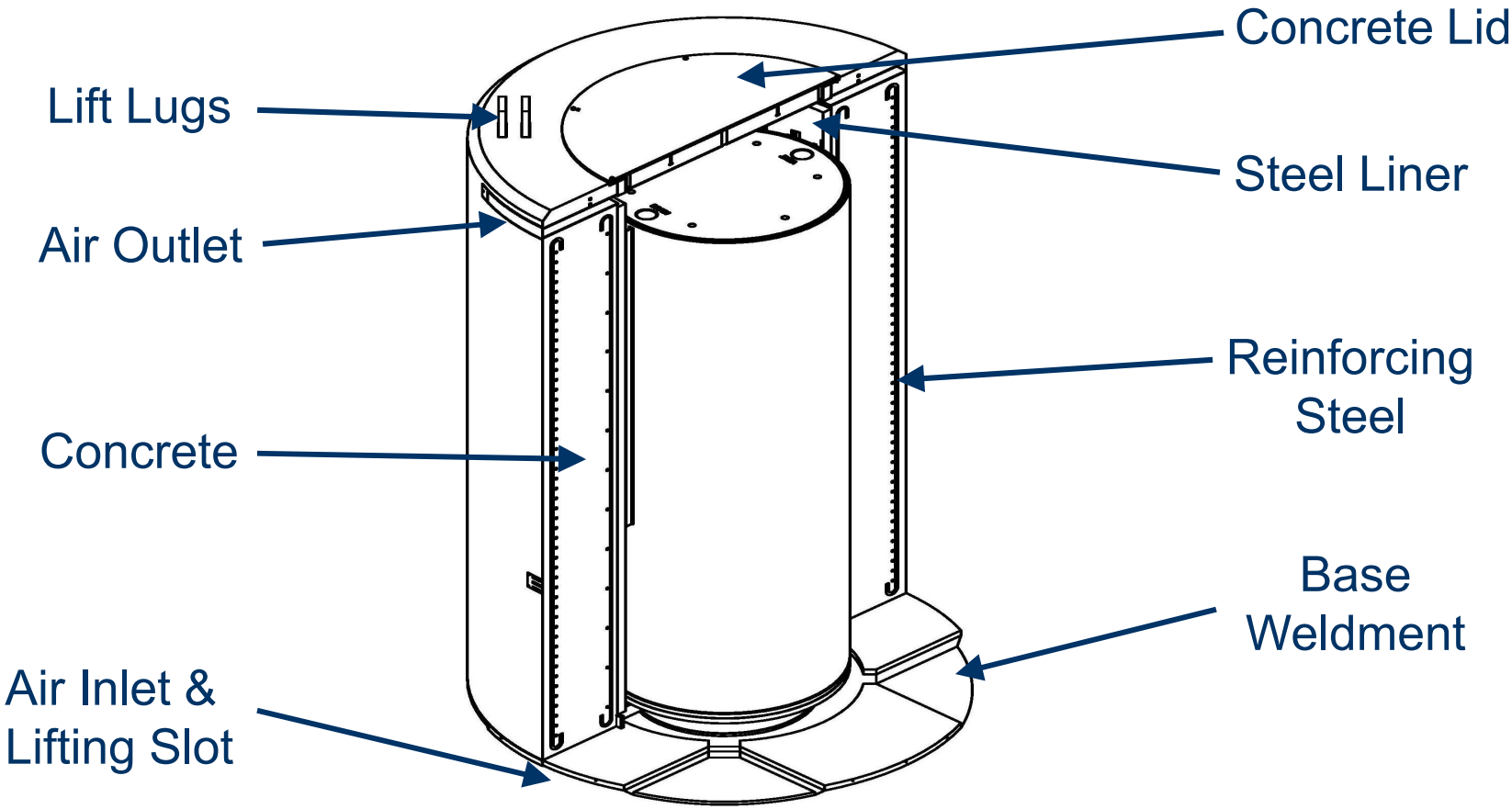

NAC INTERNATIONAL

UNITAD VCC Design Overview

- Optimized to minimize top and side surface dose rates for low operator and off-site doses
- Designed to interface with UNITAD Transfer Cask (UTC) and adapter
- Constructed on site utilizing a steel baseplate and liner assembly, two sets of steel reinforcement, and reusable exterior forms

UNITAD Transport System Overview

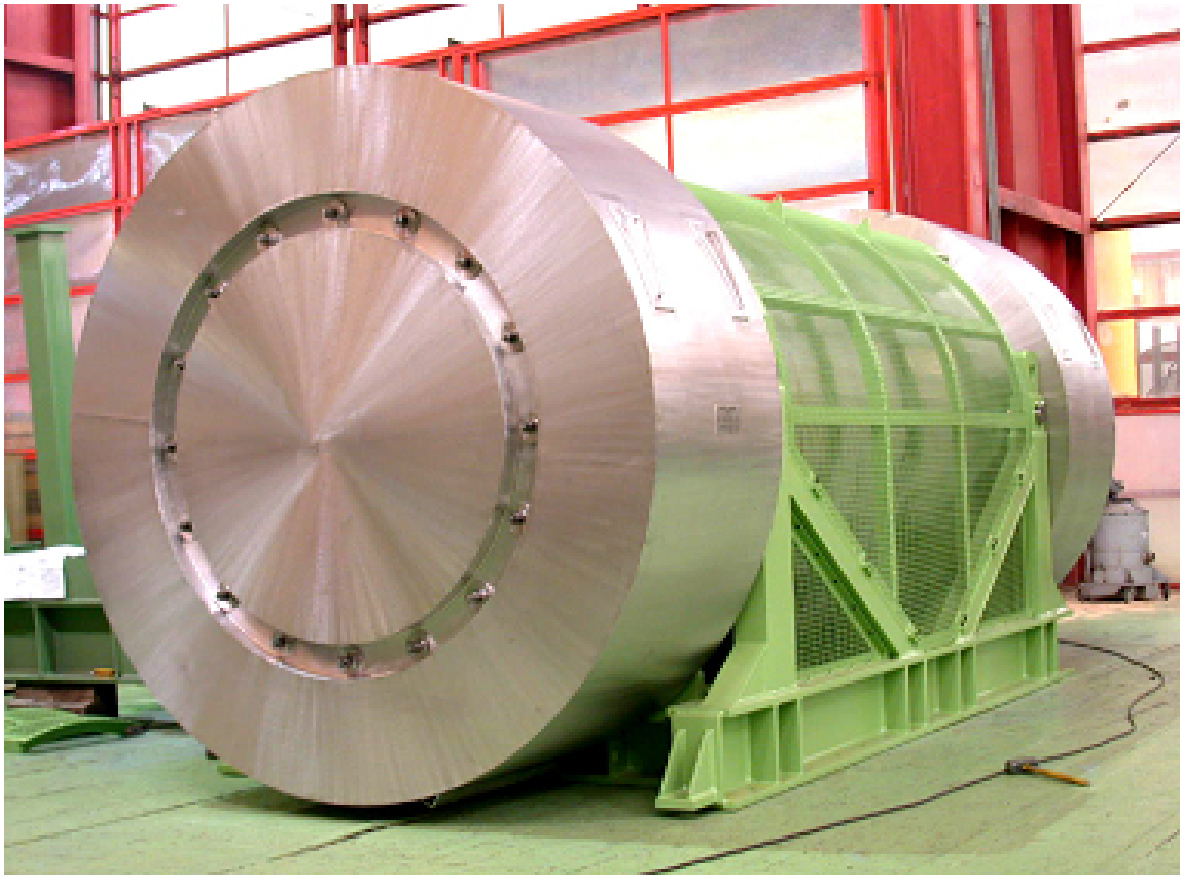

NAC INTERNATIONAL

UNITAD Transport System Design Overview

- UNITAD Transportation System meets system performance requirements for maximum in-plant handling limit of 125 tons.
- Transportation System, mounted on a Transport Frame with impact limiters installed, can be handled for intermodal transfer between rail and truck transport vehicles.
- UNITAD Transportation Cask with all stainless steel exposed surfaces will be easy to clean and maintain.

NAC INTERNATIONAL

UNITAD Transport System Configuration

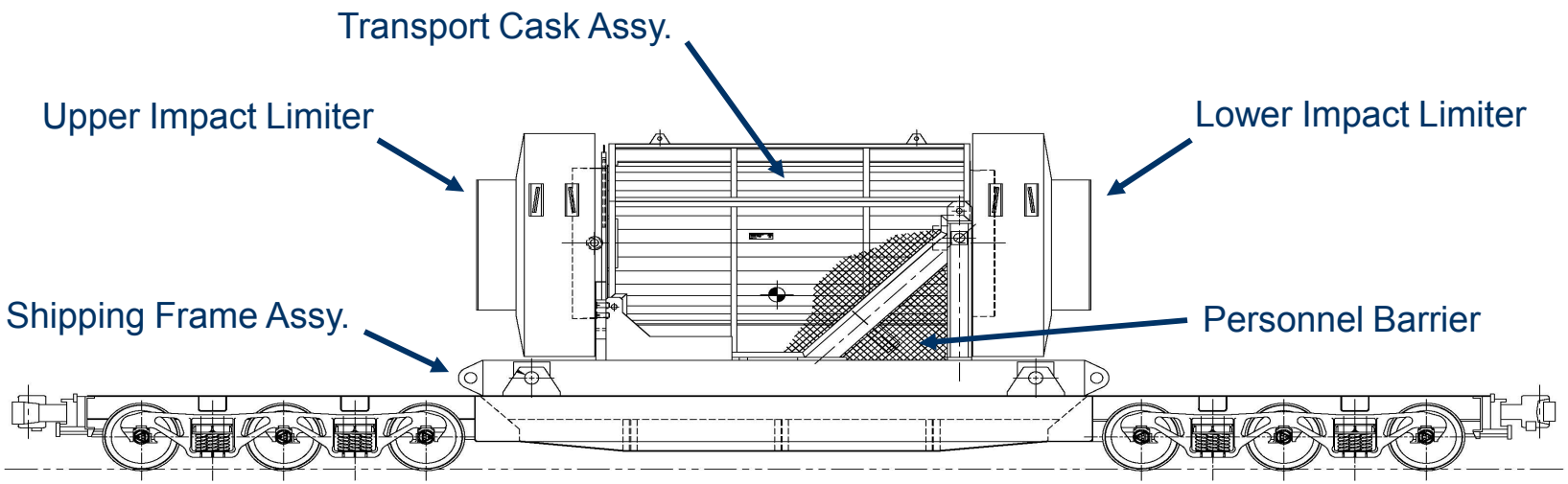

NAC INTERNATIONAL

Structural & Thermal Analyses

NAC INTERNATIONAL

Canister/Basket Storage evaluation

- Accident: Tip over condition provides lateral bounding loads on the canister weld
- Uses same methodology as for UMS
- Soil properties
  - 30,000 psi modulus
  - 100 pcf < density < 160 pcf
- Analysis requires two steps
  - LS-DYNA is used to determine the accelerations developed during the tip over
  - Maximum acceleration of 32g for basket and 35g for canister

LS-DYNA Model

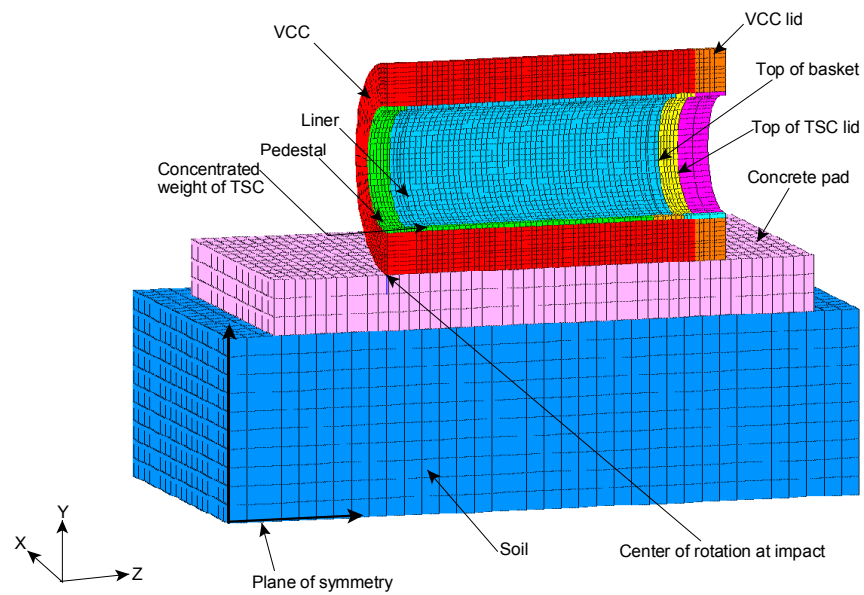

NAC INTERNATIONAL

Tip-Over basket evaluation

- ANSYS static evaluation of basket disk
  - Five basket orientations were considered
  - Inelastic properties were used for stainless steel
  - Conservatively neglects the shell restraint
  - Neglects any stiffness from the borated stainless steel
- 85g acceleration was conservatively applied to model

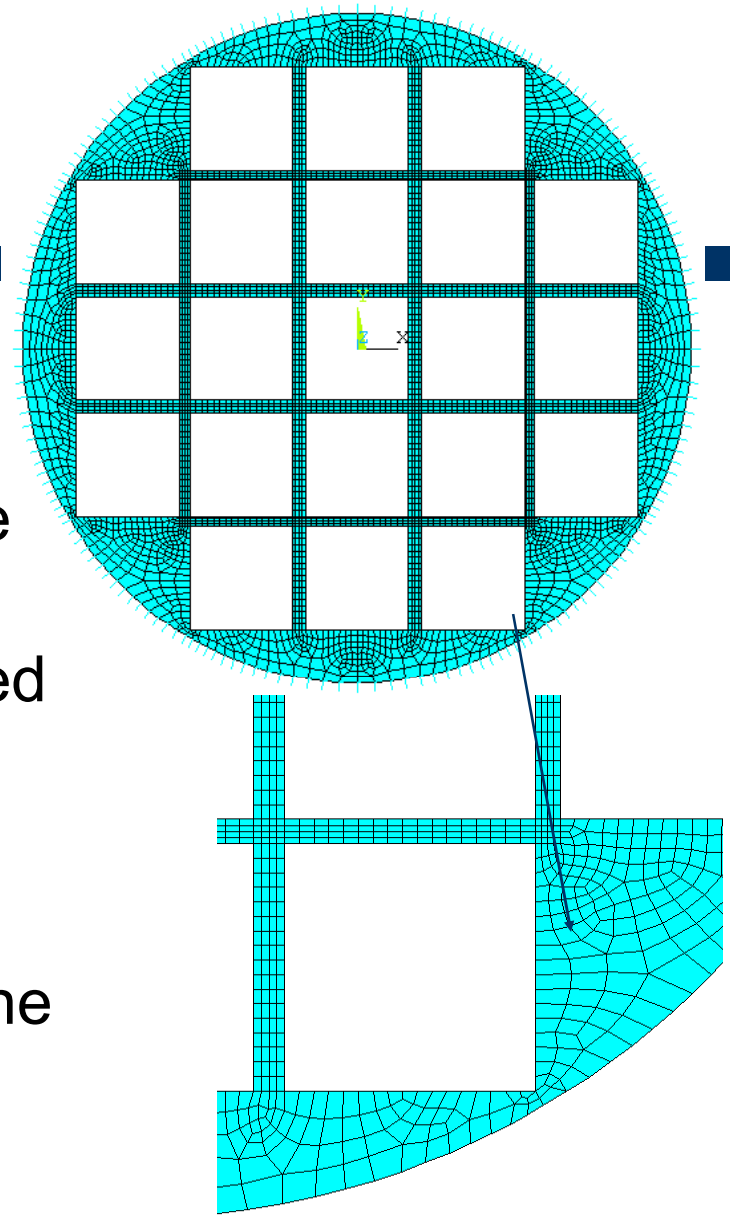

NAC INTERNATIONAL

Tip-Over basket evaluation

- Minimum M.S is 0.07 > 0, basket is confirmed to maintain configuration of the fuel

Section	P_m (ksi)			Section	$P_m + P_b$ (ksi)		
	S_{int}	S_{allow}	MS		S_{int}	S_{allow}	MS
101	41.2	44.2	0.07	97	49.6	56.9	0.15
97	41.2	44.2	0.07	101	49.6	56.9	0.15
7	30.1	44.2	0.47	16	30.1	56.9	0.89
82	30.1	44.2	0.47	78	30.1	56.9	0.89
56	29.8	44.2	0.49	7	30.0	56.9	0.90
29	29.8	44.2	0.49	82	30.0	56.9	0.90
58	27.4	44.2	0.62	56	29.9	56.9	0.90
31	27.4	44.2	0.62	29	29.9	56.9	0.90
8	25.6	44.2	0.73	51	27.3	56.9	1.08
83	25.6	44.2	0.73	57	27.3	56.9	1.09

NAC INTERNATIONAL

Tip-Over basket evaluation

- Buckling is evaluated with LS-DYNA at 100g's

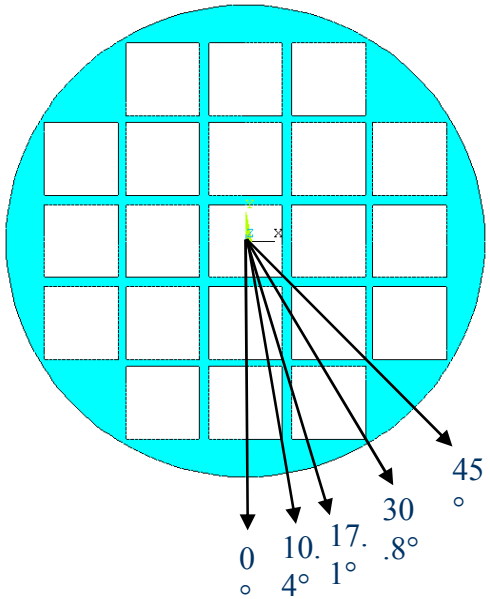

Fuel assembly modeled as elastic square block with adjusted material density to provide correct mass

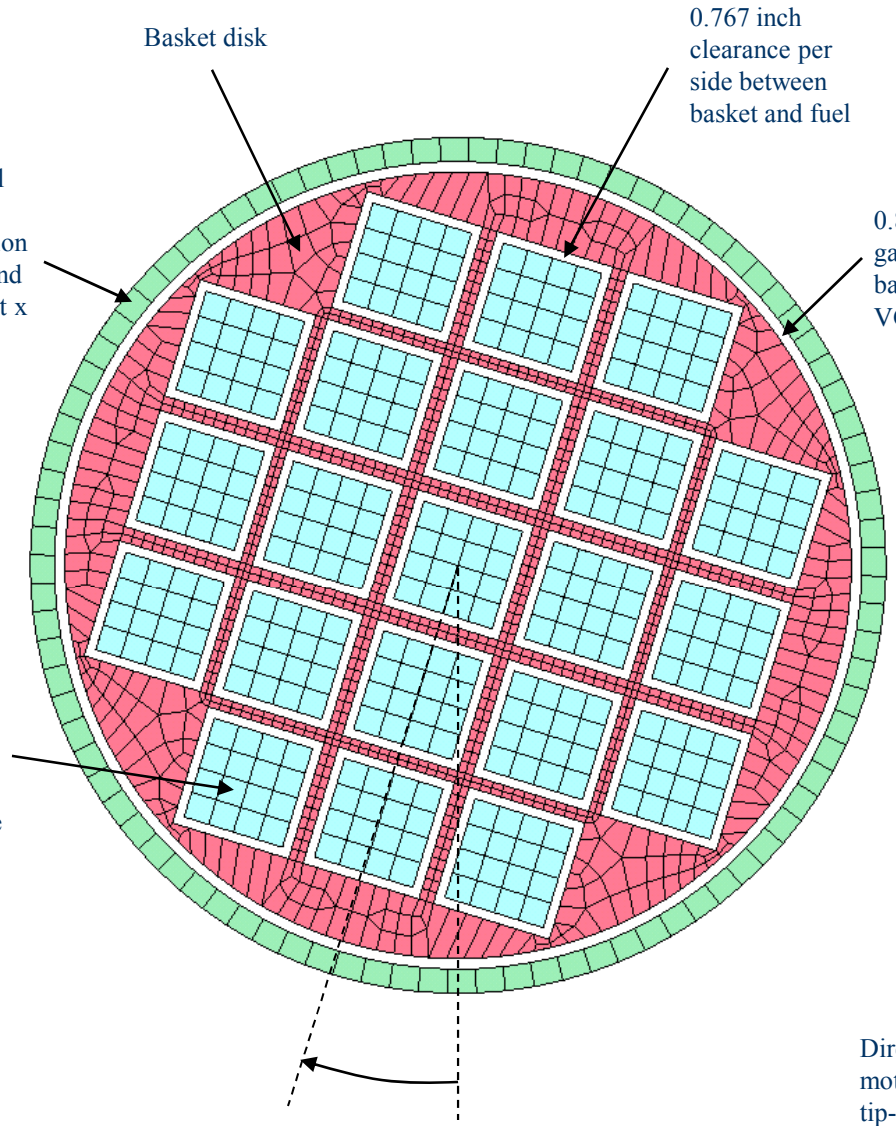

NAC INTERNATIONAL

Tip-Over basket evaluation

- Basket disk does not exhibit buckling
- Plastic strains show significant margin to 30% ultimate strain
- Fuel configuration is maintained

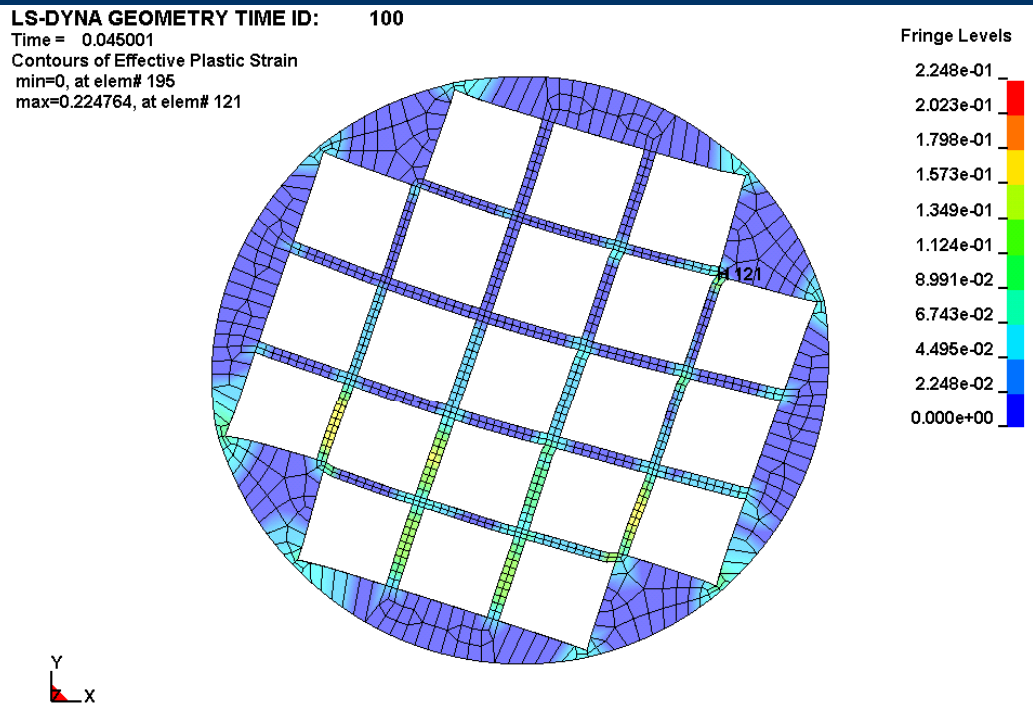

	Basket Orientation Angle, deg				
	0.0	10.4	17.1	30.8	45.0
Maximum plastic strain	0.185	0.192	0.225	0.143	0.124

NAC INTERNATIONAL

Canister evaluation

- Finite element model methodology follows that of UMS
- Static evaluations are performed
  - Normal conditions
    - Pressure, handling, thermal
  - Accident conditions
    - Tip over, pressure

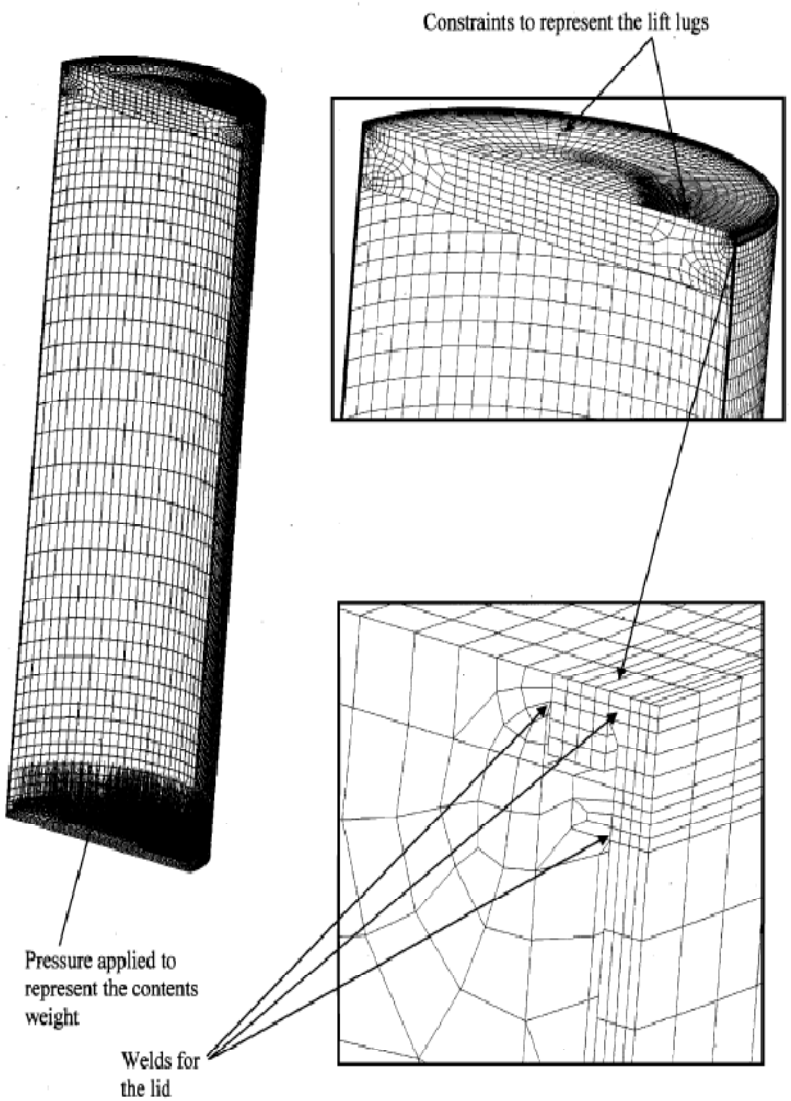

NAC INTERNATIONAL

Canister evaluation

- Sectional stresses follows UMS methodology
- SAR contains summary of PM, PM+B stresses
- M.S. for handling+pressure: +0.22
- M.S. for tip over:+0.48
- M.S. for 2-foot drop: +5.1

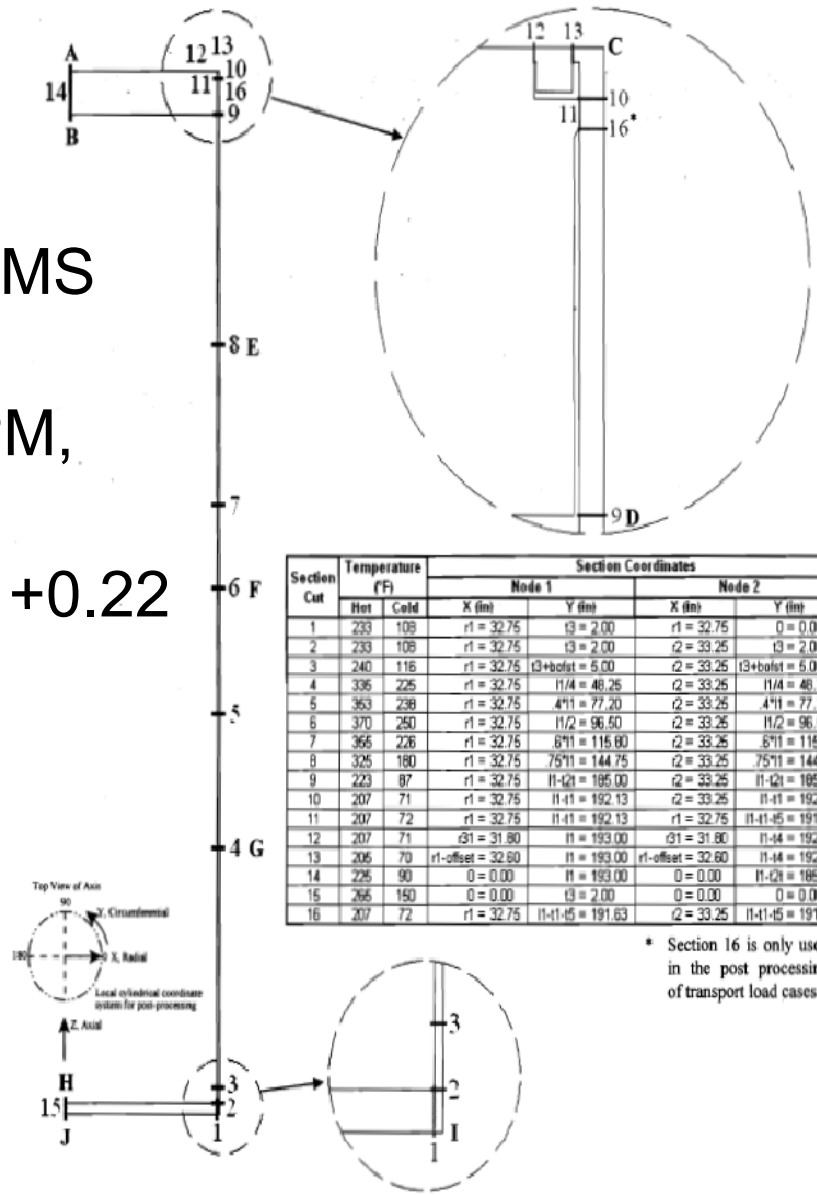

Section Cut	Temperature (°F)		Section Coordinates			
			Node 1		Node 2	
	Hot	Cold	X (in)	Y (in)	X (in)	Y (in)
1	233	109	r1 = 32.75	t3 = 2.00	r1 = 32.75	0 = 0.00
2	233	108	r1 = 32.75	t3 = 2.00	r2 = 33.25	t3 = 2.00
3	240	116	r1 = 32.75	t3+bofst = 5.00	r2 = 33.25	t3+bofst = 5.00
4	336	225	r1 = 32.75	t1/4 = 48.25	r2 = 33.25	t1/4 = 48.25
5	353	238	r1 = 32.75	.4*t1 = 77.20	r2 = 33.25	.4*t1 = 77.20
6	370	250	r1 = 32.75	t1/2 = 96.50	r2 = 33.25	t1/2 = 96.50
7	356	226	r1 = 32.75	.6*t1 = 115.80	r2 = 33.25	.6*t1 = 115.80
8	325	180	r1 = 32.75	.75*t1 = 144.75	r2 = 33.25	.75*t1 = 144.75
9	223	87	r1 = 32.75	t1-t2t = 185.00	r2 = 33.25	t1-t2t = 185.00
10	207	71	r1 = 32.75	t1-t1 = 192.13	r2 = 33.25	t1-t1 = 192.13
11	207	72	r1 = 32.75	t1-t1 = 192.13	r1 = 32.75	t1-t1-t5 = 191.63
12	207	71	d1 = 31.80	t1 = 193.00	d1 = 31.80	t1-t4 = 192.75
13	206	70	r1-offset = 32.60	t1 = 193.00	r1-offset = 32.60	t1-t4 = 192.75
14	225	90	0 = 0.00	t1 = 193.00	0 = 0.00	t1-t2t = 185.00
15	266	150	0 = 0.00	t3 = 2.00	0 = 0.00	0 = 0.00
16	207	72	r1 = 32.75	t1-t1-t5 = 191.63	r2 = 33.25	t1-t1-t5 = 191.63

* Section 16 is only used in the post processing of transport load cases.

NAC INTERNATIONAL

Pedestal Evaluation

- Accident end loading condition is controlled by the 24-inch drop
  - LS-DYNA model determines maximum acceleration (24.4 g) and the inlet vent will have greater area than the ½ blocked vent condition

LS-DYNA ¼ Symmetry model of pedestal

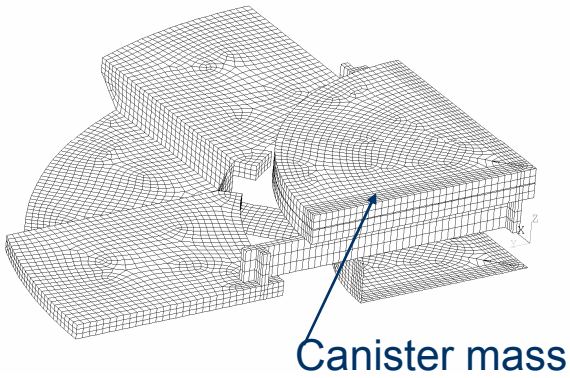

NAC INTERNATIONAL

VCC Storage Evaluations

- Normal condition is controlled by the thermal expansion: determines the size of reinforcement
- Lift condition determines the design of the Nelson studs
- Lift condition determines the design of the embedment and the lift pins for 3/5 safety factors on yield and ultimate strengths

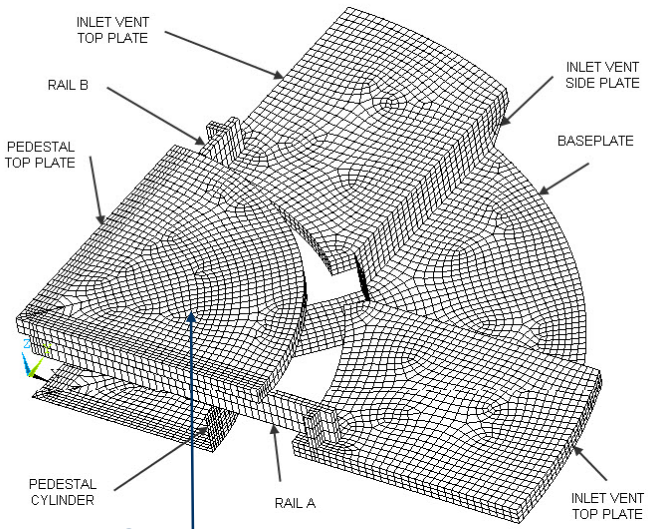

Canister weight is represented by a pressure load on plate

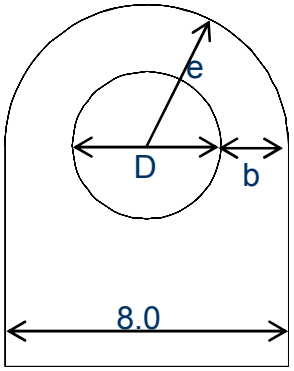

NAC INTERNATIONAL

Storage Thermal Evaluation

- Thermal evaluation uses same methodology as for UMS
  - Fuel region is homogenized by using effective conductivity, density, specific heat
  - Effective properties are used for the borated stainless steel and gaps
  - Transfer cask thermal evaluation uses a detailed 3D conduction/radiation model
  - VCC thermal evaluation uses a 2D axisymmetric CFD model

Effective Properties for the CFD Analyses

- Previous license amendments have used a series of effective properties (radiation & conduction) for the
  - Series of PWR fuel assemblies
  - Neutron absorber
  - Cross sectional properties for the 2D CFD evaluation
- No damaged fuel assemblies are considered

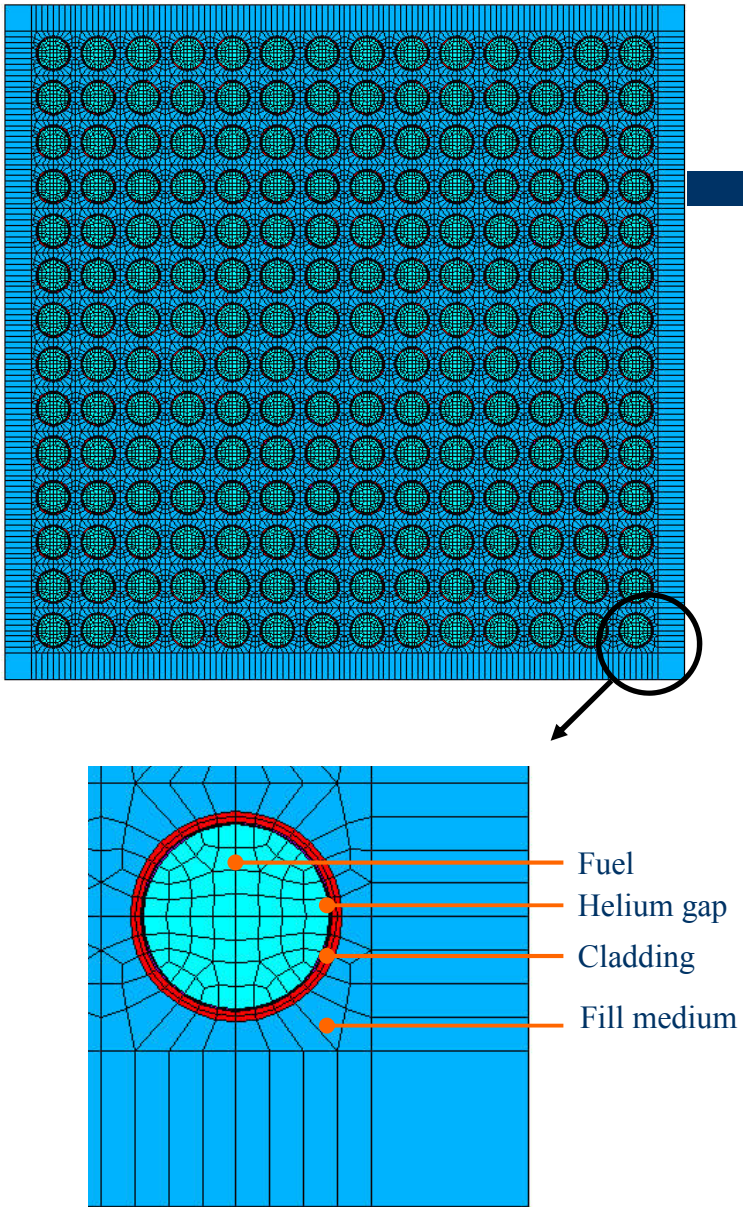

NAC INTERNATIONAL

Storage Thermal Evaluation-Transfer Condition

- 22kW Maximum heat load / peaking factor of 1.11
- Normal conditions applied with out solar insolance
- Water time is limited to 22 hr
- Vacuum properties use helium condition, since vacuum > 1 mb
- Vacuum time is unlimited
- Maximum fuel clad temperature is 745F < 752F

Detailed model of TFR, canister, disks, homogenized fuel region

Quarter symmetry ANSYS model

NAC INTERNATIONAL

Storage Thermal Evaluation-on the ISFSI Pad

- 22kW Maximum heat load / peaking factor of 1.11
- Canister/basket evaluations are performed using 2D CFD (Fluent) models
  - Normal(76)F/off normal(-40F,106F) /accident (133F) from UMS
  - All vents blocked condition (36 Hr to reach aluminum temperature of 750F)
  - Maximum clad temperature for normal condition is 691F < 752F
  - Fire transient is enveloped by UMS using 23 kW

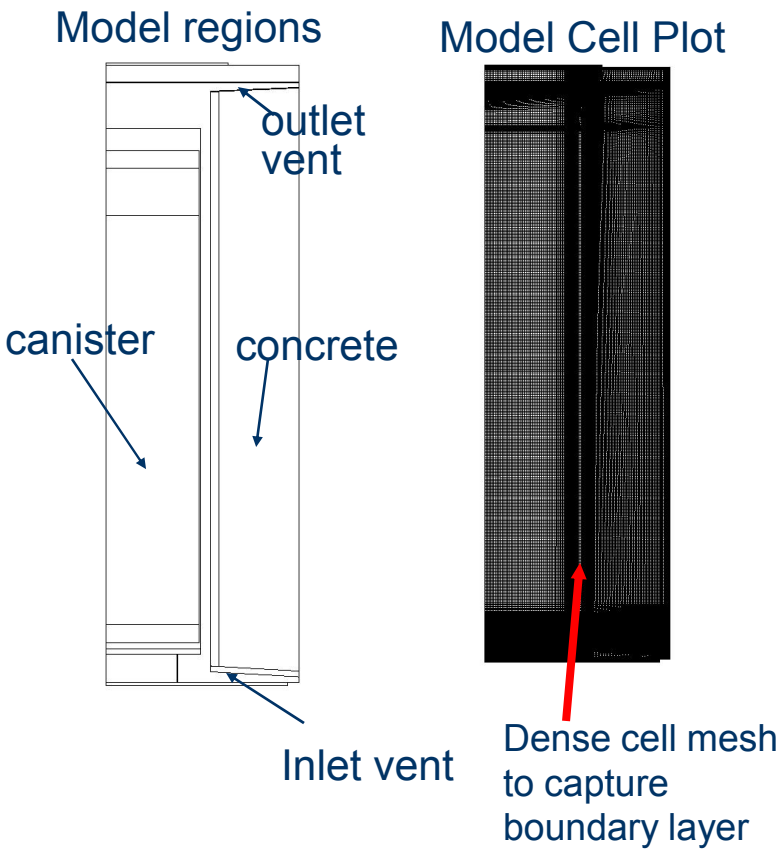

NAC INTERNATIONAL

Impact Limiter Evaluation-Transport

- Impact limiter design is based on most recent license and wood properties of NAC-CY MPC design
  - Redwood ring for side drop
  - Balsa for end/corner drop
- Maximum accelerations are computed using LS-DYNA
  - Same modeling methodology is used for UNITAD
- SAR will contain the benchmarks performed in the previous NAC CY MPC license

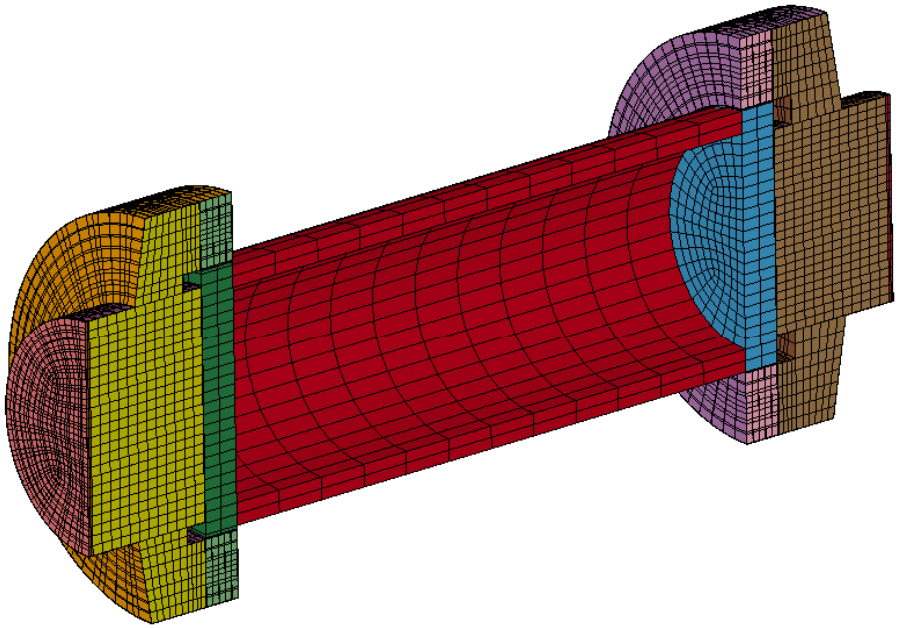

NAC INTERNATIONAL

Impact Limiter Evaluation-Transport

- Additional studies are included to evaluate the mesh sensitivities
- Accelerations are used for the Normal and Accident structural evaluations for the cask body, basket and canister
- Hot and cold conditions include tolerances also

Accelerations for the Accident Conditions

Drop Orientation	Accident Loading, Hot Condition			Accident Loading, Cold Condition		
	Maximum Acceleration (g)	Maximum Crush (in)	Maximum Strain (%)	Maximum Acceleration (g)	Maximum Crush (in)	Maximum Strain (%)
Side	38.8	13.9	67	50.7	9.8	47
Top/Bottom End	26.3	20.7	47	35.9	12.8	29
C.G. over Corner	27.3	27.1	62	27.4	21.6	49

NAC INTERNATIONAL

Basket Transport Evaluation

- Transport model uses the storage model
  - Gap between canister/liner is based on storage design
- Maximum acceleration of 85g envelopes 55g design basis
- Model conservatively neglects the shell interaction
- M.S. is +0.07

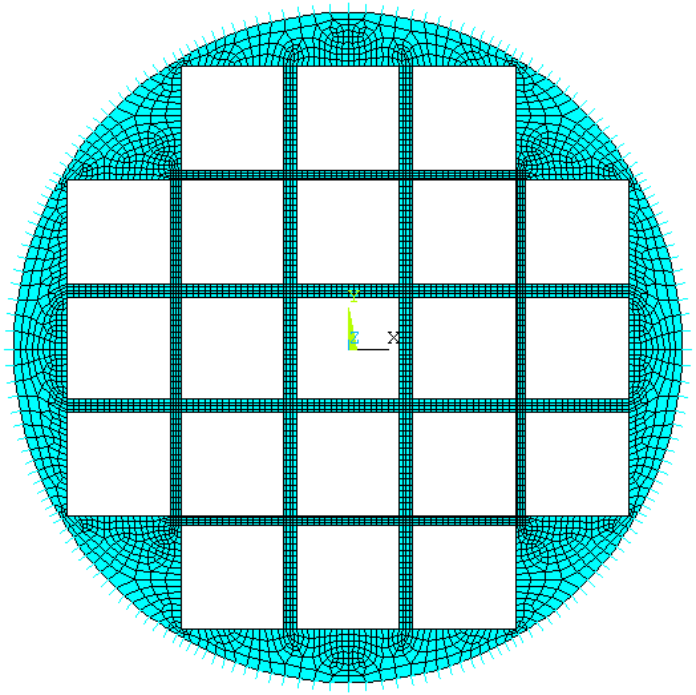

NAC INTERNATIONAL

Canister Transport Evaluation

- Storage model is revised to use design basis for the transport cask geometry
- Section stress calculation uses storage methodology
- M.S. for 30-foot side drop: +0.42
- M.S. for 30-foot top corner +0.28

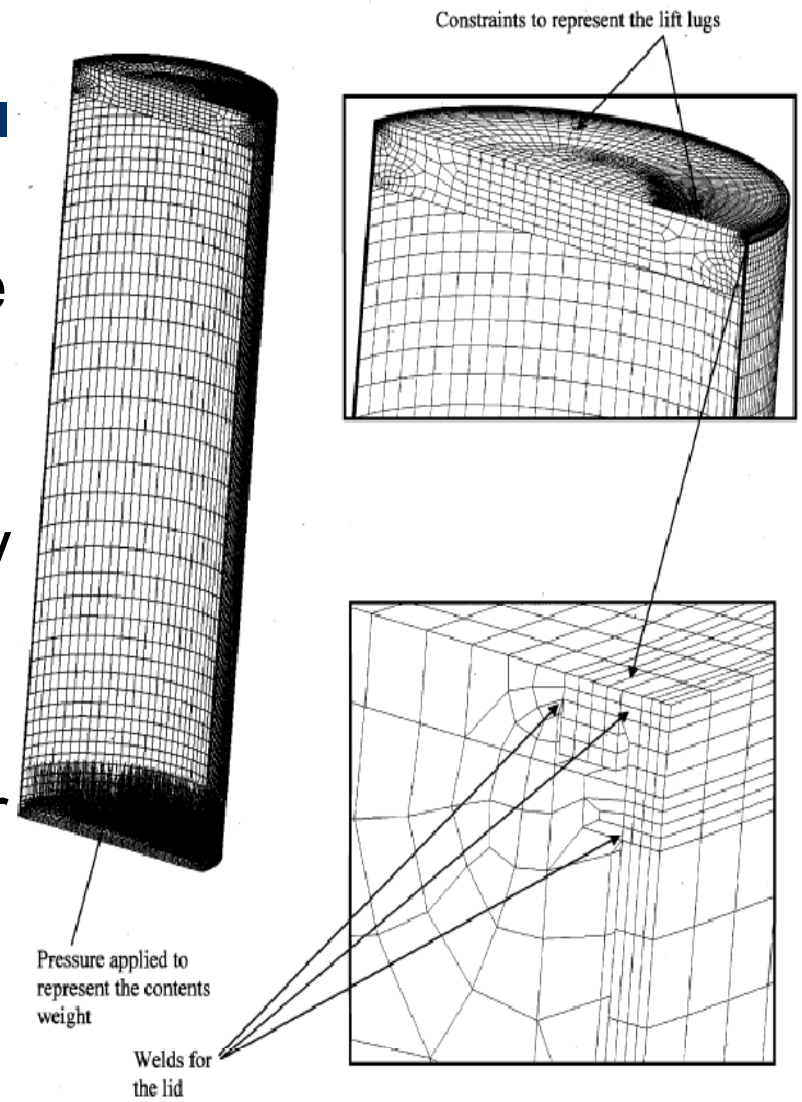

NAC INTERNATIONAL

Cask Body Transport Evaluations

- ANSYS model contained details for the
  - Lid (XM-19)
  - Lid bolts (SB-637)
  - Lead
  - Neutron shield is included without any strength contribution
- 30-foot drop (all orientations)
- 1-foot drop (all orientations)
- Accident pressure, 200m immersion
- Thermal stress evaluations
- Buckling is evaluated per N-284
- Model is used to determine bolt load due to prying action
- Pin puncture is performed using static analyses
- M.S for 30-foot side drop: +0.15
- M.S. for 30-foot corner: +0.06

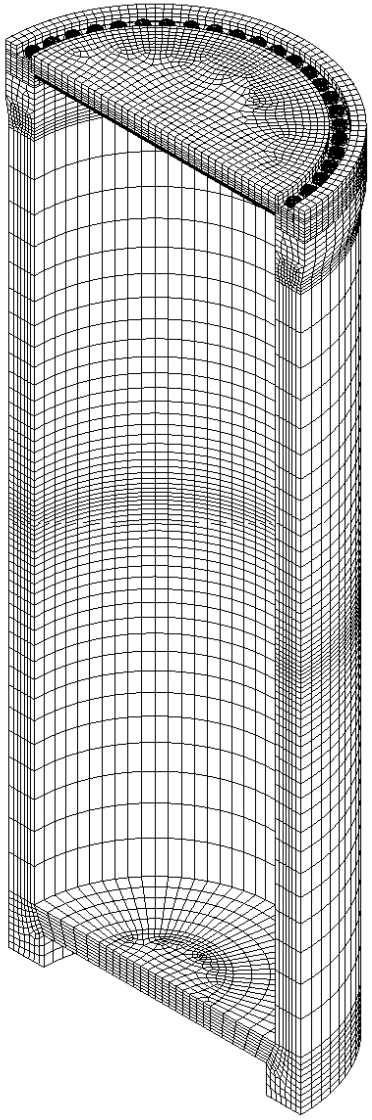

NAC INTERNATIONAL

Storage Thermal Evaluation-Transport Condition

- 18kW Maximum heat load / peaking factor of 1.11
- Effective properties from storage are used in the model
- Individual disks are modeled
- Normal condition (100F+solar)
  - Fuel clad: 575°F<752°F
  - NS4: 258°F<300°F
- Accident Fire condition (transient)
  - Lead: 475°F<620°F

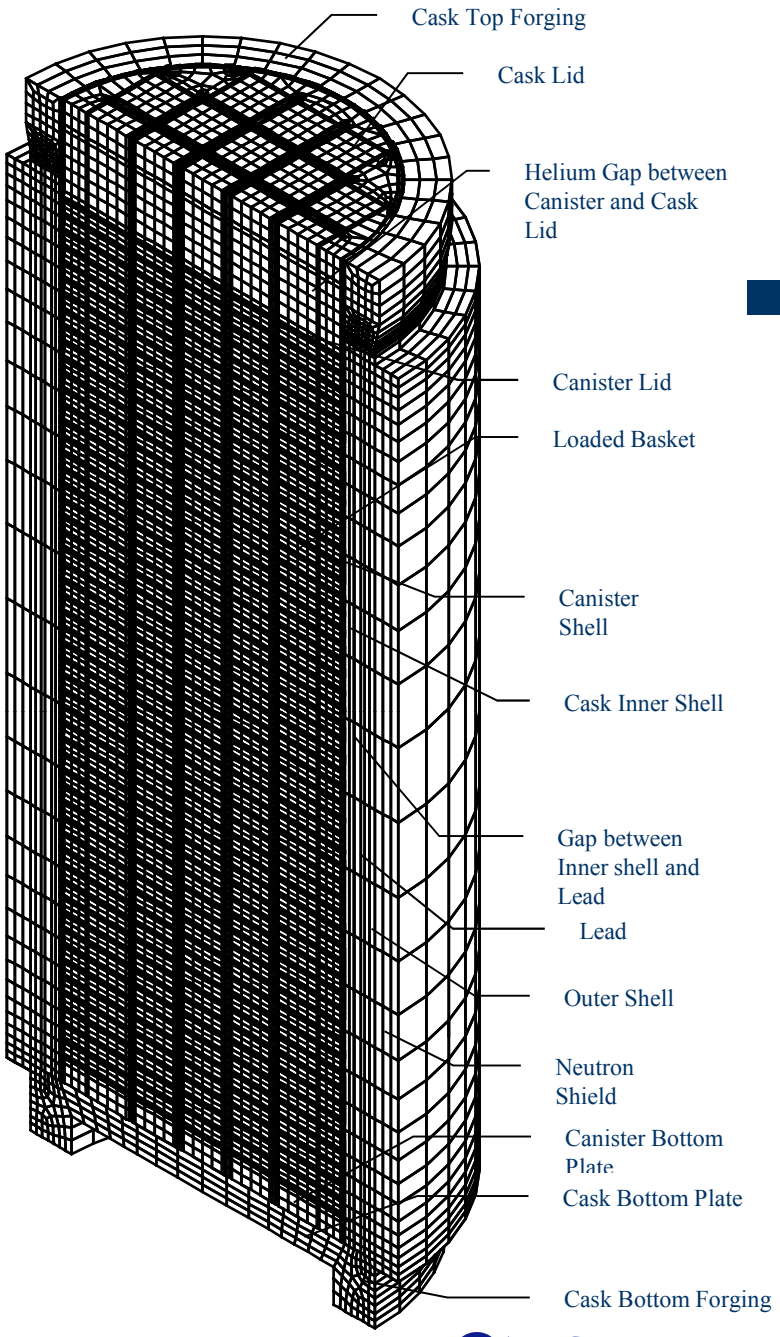

NAC INTERNATIONAL

Shielding & Criticality Analyses

NAC INTERNATIONAL

Shielding Analysis
Method

- Codes
  - MCNP5: 3-D Monte Carlo Evaluations
    - Continuous energy cross-sections – ENDF/B-VI libraries
    - Benchmarked to literature and against previous NAC cask models
  - SCALE 5.1: SAS2H Source Term Evaluations
    - 44-Group ENDF/B-IV libraries
  - SKYSHINE (NAC-CASC): Site Boundary Analysis

Method (continued)

- Assemblies grouped by NSSS vendor:
  - CE
  - Westinghouse
  - B&W
- Arrays: 14x14, 15x15, 16x16, and 17x17
- Primary grouping array configuration and fuel mass

Method (continued)

- Determine maximum system dose rates for storage (10 CFR 72) and transport (10 CFR 71) systems by evaluating range of:
  - Minimum cool time (down to 5 years)
  - Maximum burnup (up to 45 GWd/MTU)
  - Minimum enrichment (down to 1.3 wt.% ^{235}U)
  - Maximum hardware source (assembly group dependent)
- Non-fuel hardware:
  - Burnable poison rods (BPRAs)
  - Thimble plugs
  - CEAs

Source Determination

- Licensing basis canister heat load
  - Storage (10 CFR 72) evaluated at 25 kW
    - Limited to 22 kW by thermal constraints – Updated Cool-Time Tables
  - Transport (10 CFR 71) at 18 kW
- Cool time for a given fuel type specified to meet both heat load and dose rate limits
  - Dose rate limits specific to transport analysis (10 CFR 71)
  - 10 CFR 72 storage and transfer analysis based on a search for maximum dose at given heat load

Source Profile

- Axial burnup profile based on generic PWR profiles
  - Applied burnup profile with 1.11 peak (burnup credit profile)
  - Bounds 1.08 profile applied in UMS/MAGNASTOR applications
- Source profile determination
  - Photon source equal to relative burnup
  - Neutron source equal to relative burnup raised to 4.22 power

Hardware Source Activation Fractions

- Activation ratios for upper plenum and end fittings based on PNL-6906
  - Upper end fitting: 0.1 (CE upper 0.05)
  - Upper plenum: 0.2
  - Lower plenum: 0.2 (B&W only)
  - Lower end fitting: 0.2 (0.1 B&W)
- In-core hardware flux factor at 1.0

Shielding Evaluations

- Discrete (detailed) shielding evaluations for storage and transfer casks with undamaged fuel
  - Homogenized fuel material
  - All remaining cask features detailed
- Transfer cask evaluations for:
  - Dry system (bounding)
  - Wet system
- Storage and transport system cask/canister always dry

Shielding Evaluations (continued)

- Additional shielding / radiation protection evaluations for 10 CFR 72 FSAR
  - Transfer operations occupational exposure
  - Storage occupational exposure
  - ISFSI dose (skyshine) calculations
    - Based on a 20 cask array - Standard review plan general layout
    - Site specific analysis for utility required to demonstrate compliance with 10CFR72.104 and 72.106
  - Cask and canister activation evaluations – not required by draft SRP but part of the amended UMS FSAR
  - Surface contamination release evaluation (1,000 beta-gamma dpm/100cm^2 and 20 alpha dpm/100cm^2 for specification compliance)

Dose Result / Dose Targets

- Storage Cask (10 CFR 72)
  - Target 100 mrem/hr average side dose rate – no regulatory limit on individual cask dose rates
    - Higher allowance for top and streaming path dose rates calculated
  - Site boundary 25 mrem/yr (normal)
  - Site boundary 5 rem (accident)
- Transfer Cask (10 CFR 72)
  - Dose rates ALARA

Storage Cask Model

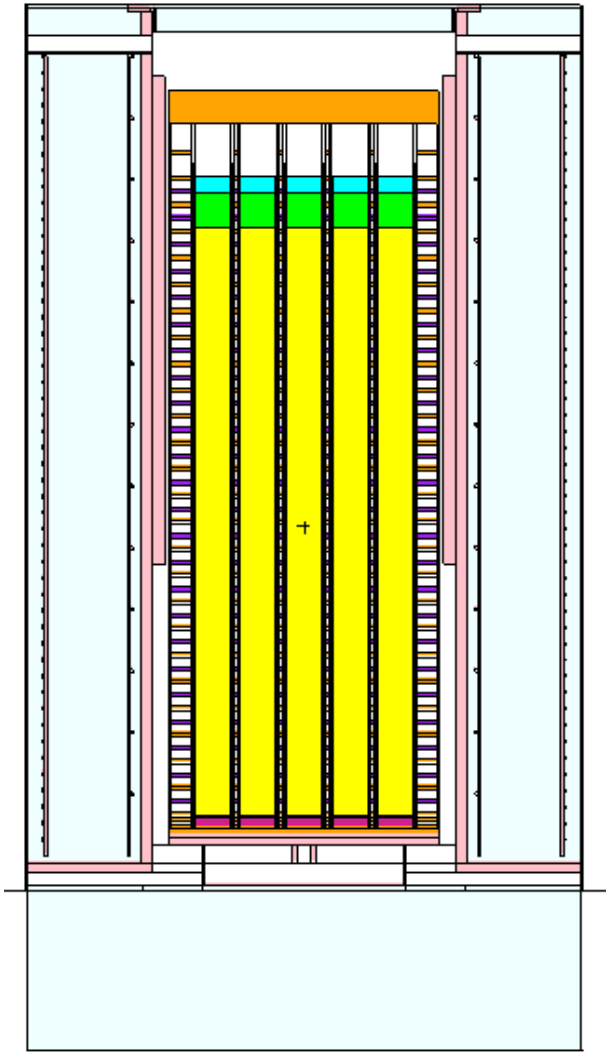

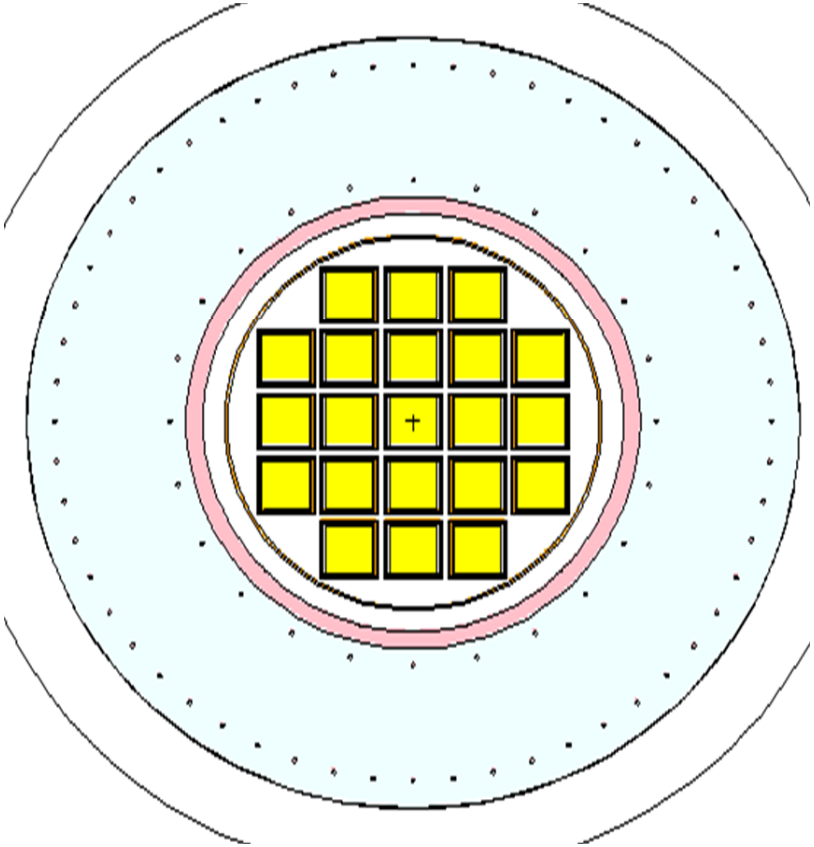

NAC INTERNATIONAL

Storage Cask Side Dose Rates

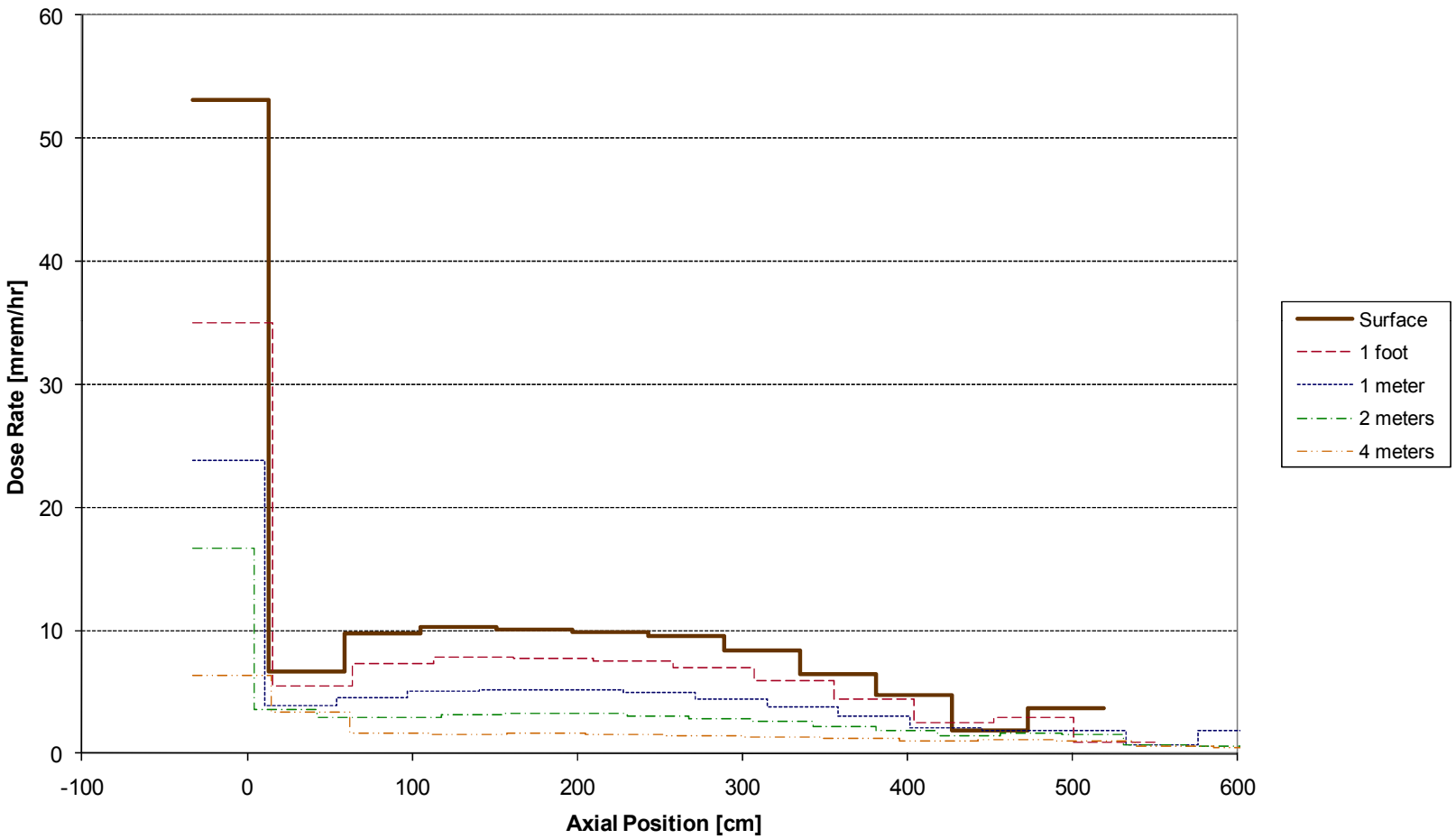

NAC INTERNATIONAL

Storage Cask Top Dose Rates

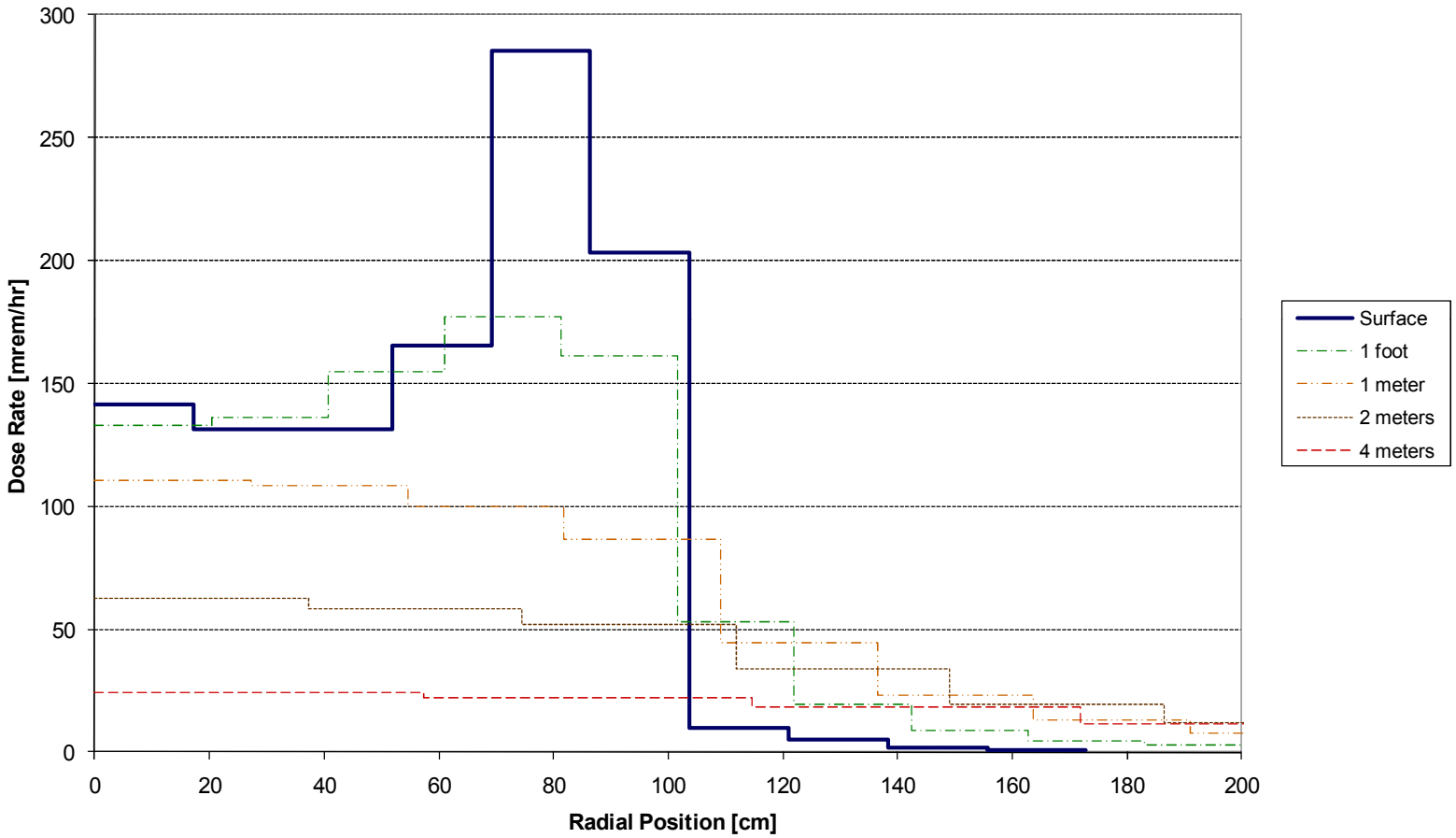

NAC INTERNATIONAL

Storage Cask Air Inlet Dose Rates

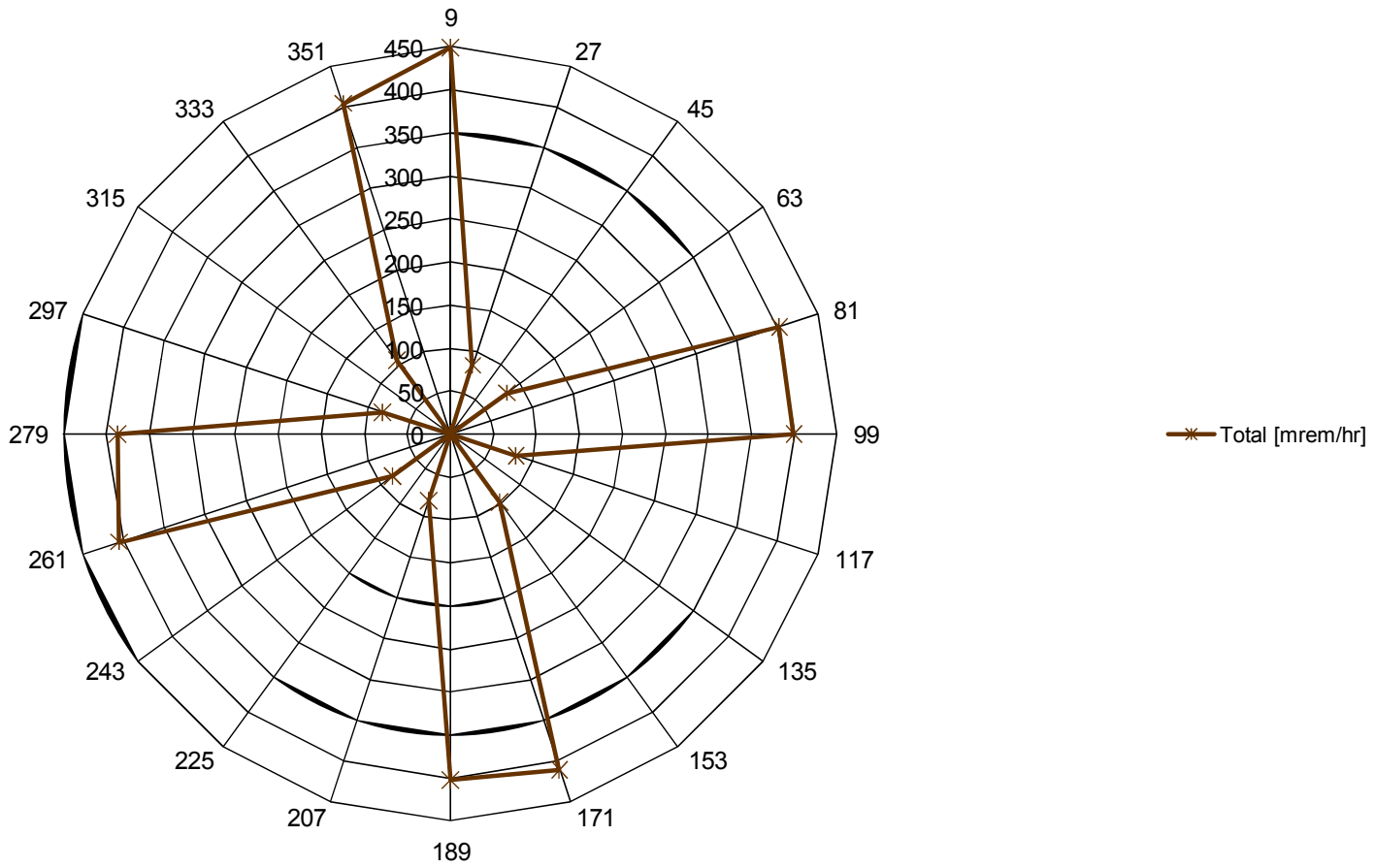

NAC INTERNATIONAL

Storage Cask Air Outlet Dose Rates

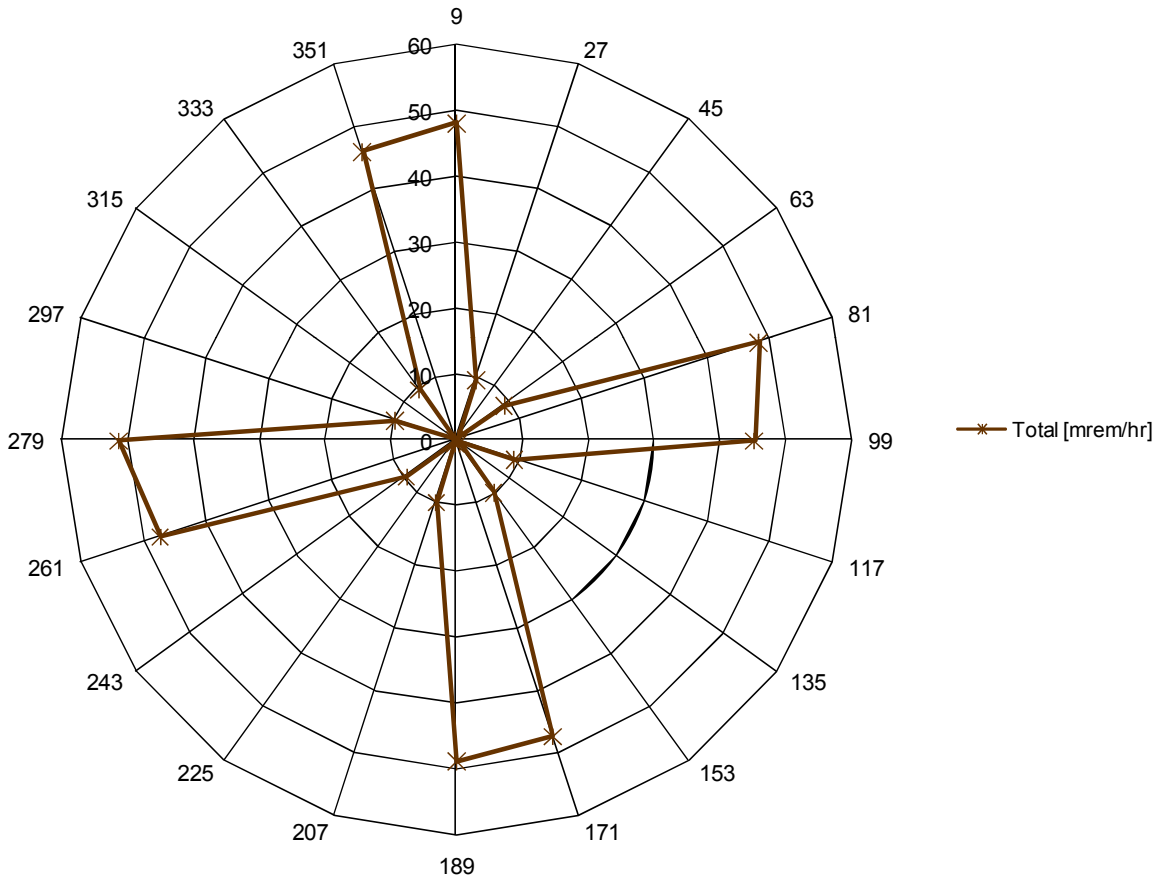

NAC INTERNATIONAL

Transfer Cask Model

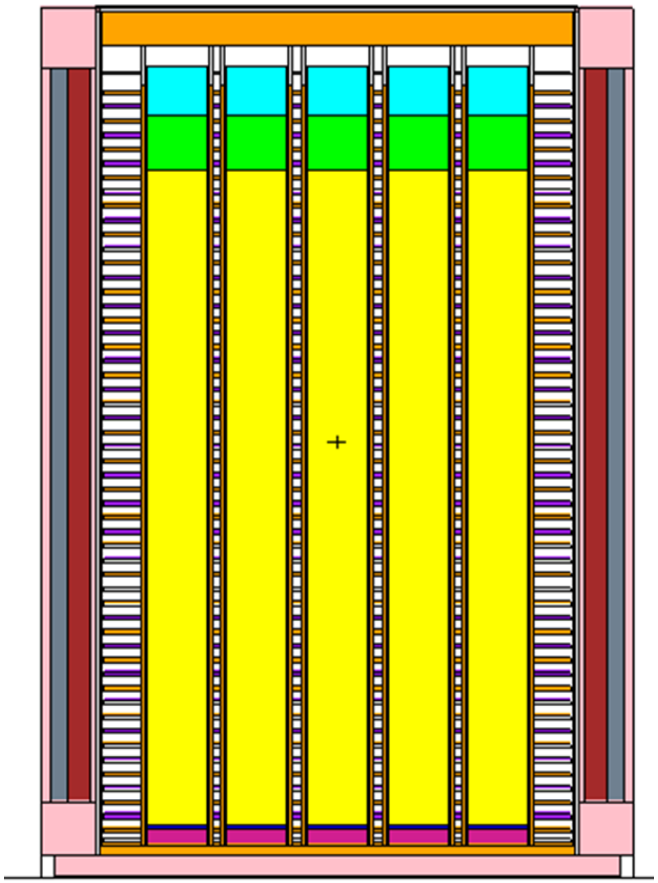

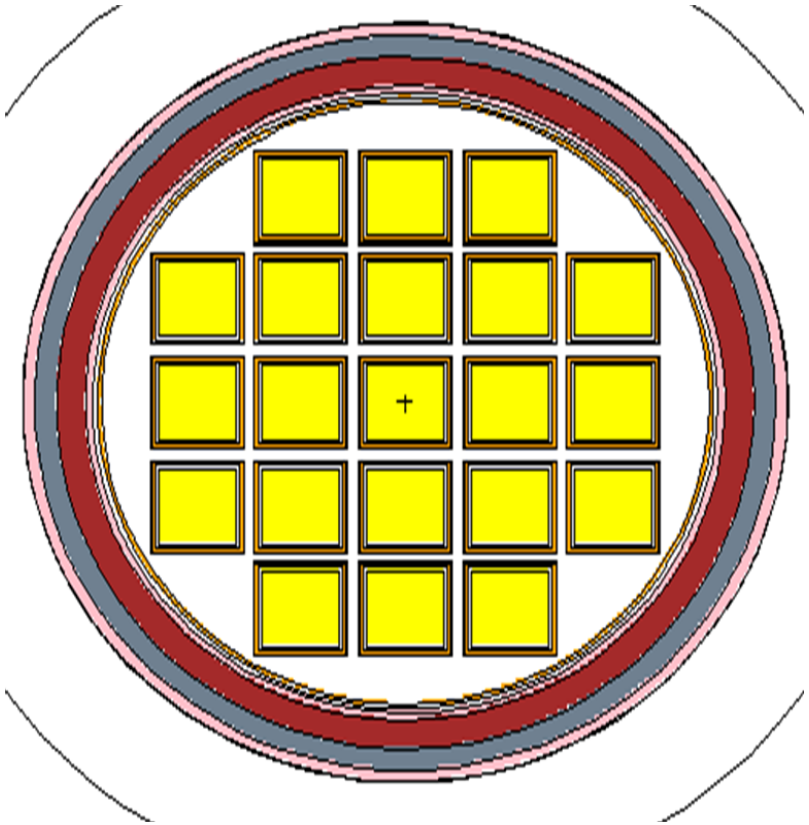

NAC INTERNATIONAL

Transfer Cask Side Dose Rates

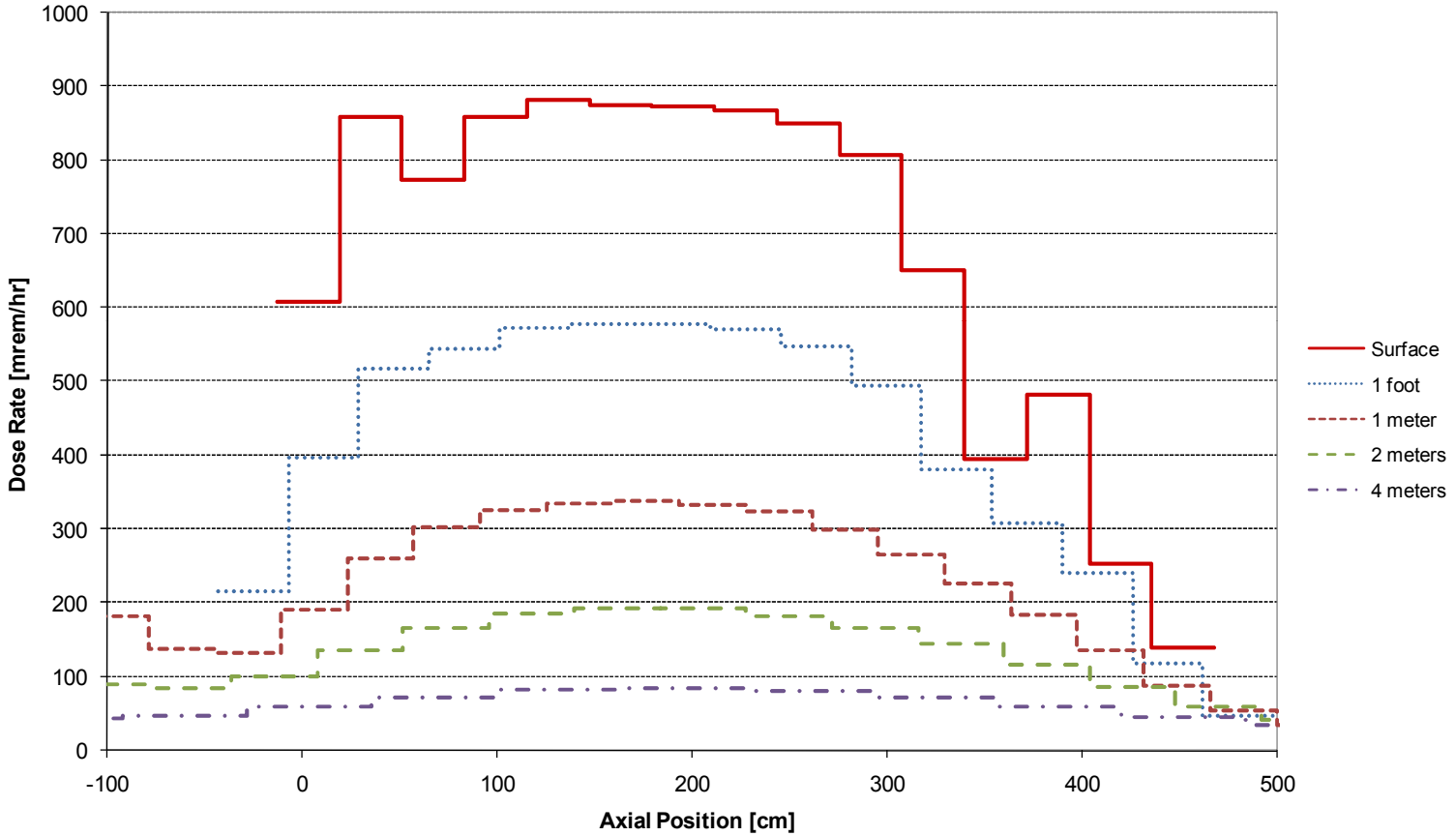

NAC INTERNATIONAL

Transfer Cask Top Dose Rates

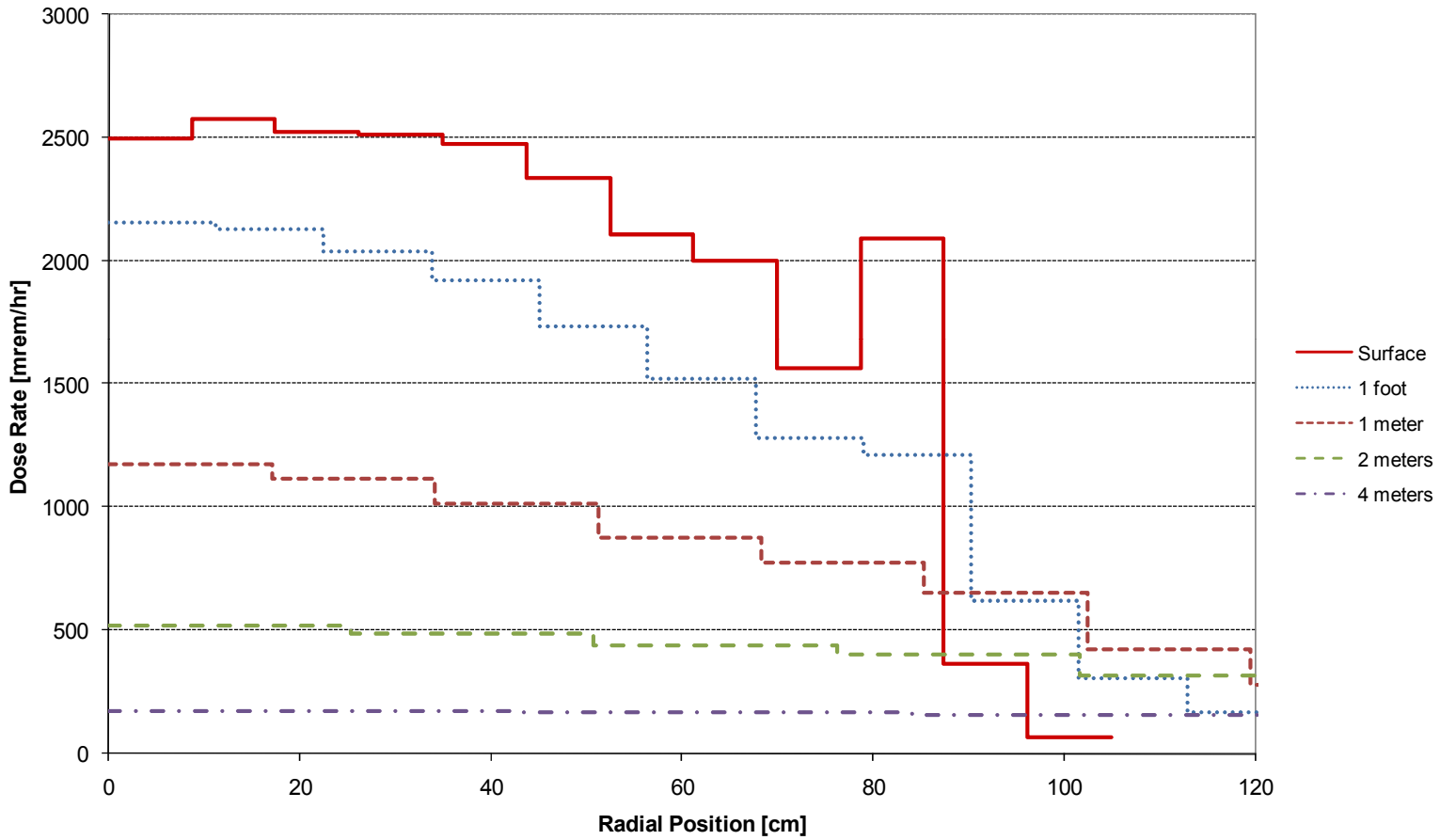

NAC INTERNATIONAL

Transfer Cask Bottom Dose Rates

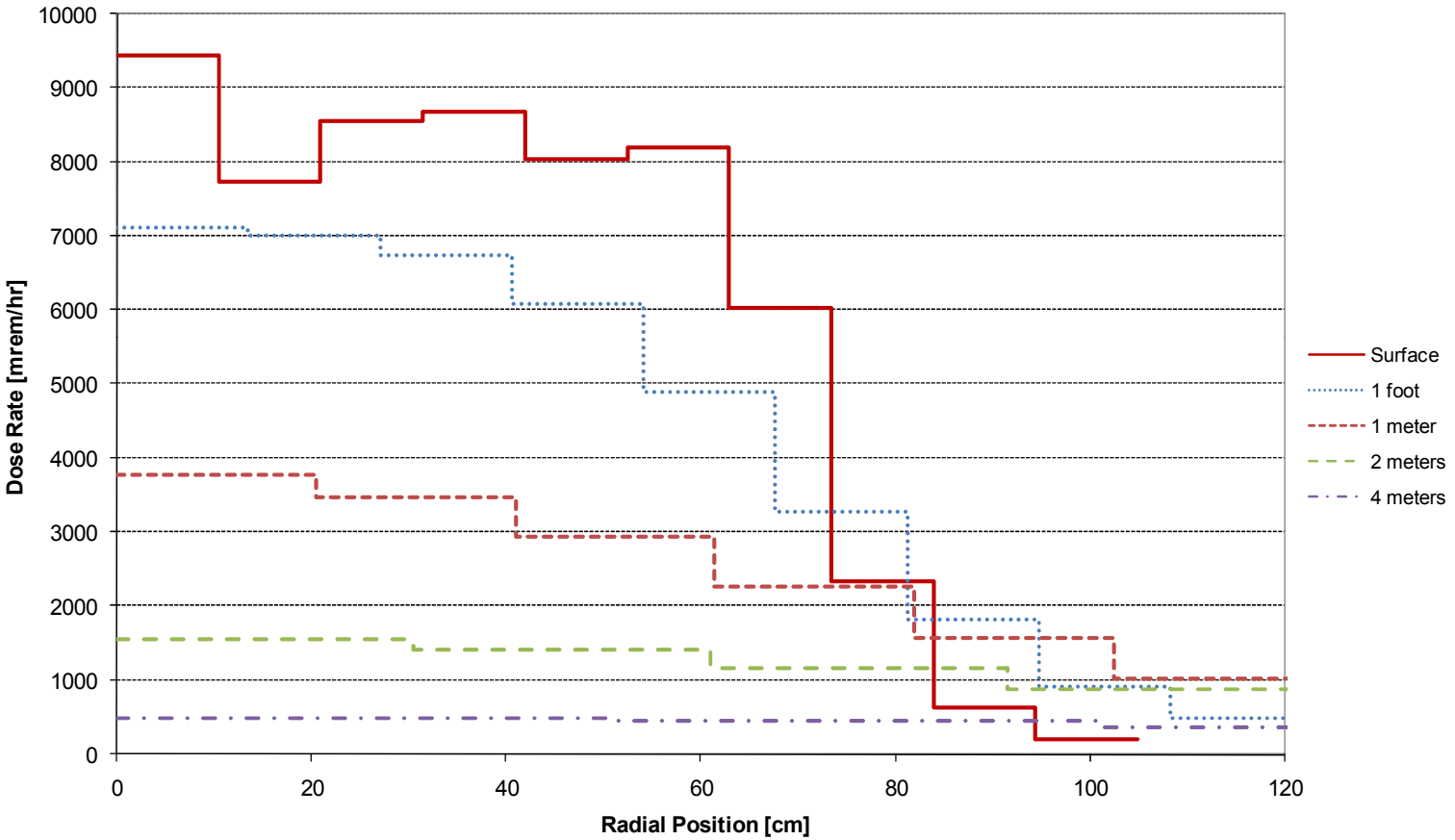

NAC INTERNATIONAL

Dose Result Targets (continued)

- Transport (10 CFR 71) Requirements
  - General Limit (10 CFR 71.47(a))
    - 200 mrem/hr – package surface
    - Transport Index (1 meter dose rate) ≤ 10
  - Exclusive Use if Exceeding General Limit
    - 1000 mrem/hr contact
    - 10 mrem/hr at 2 meters from vertical planes of vehicle
    - 2 mrem/hr at occupied position
    - Transport via closed vehicle (personnel barrier)
  - TAD requirements
    - Dose limits met without inserts in trunnion pockets
    - Target dose of 40 mrem per pair for trunnion install

Transport Cask Model
(Lift Ring and Spacer Not Modeled)

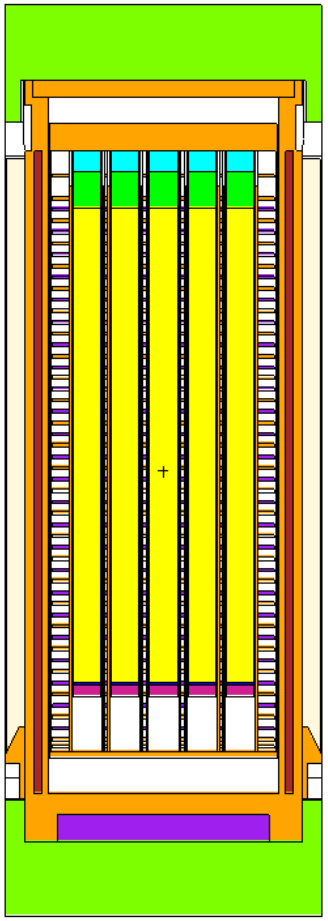

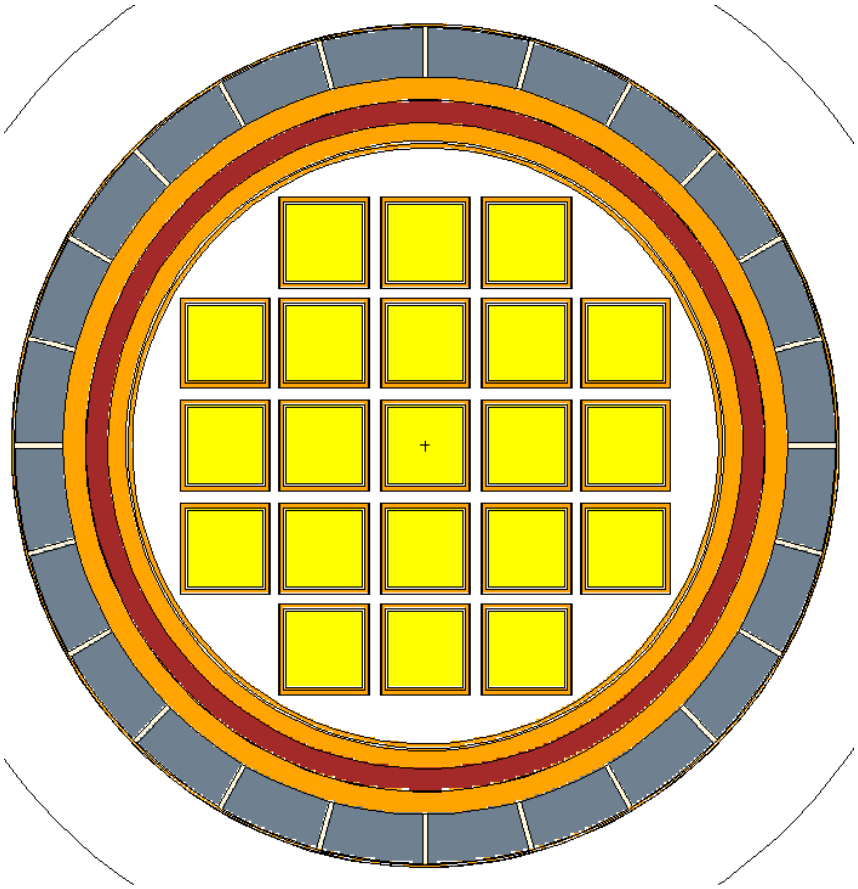

NAC INTERNATIONAL

Transport Cask Side Dose Rates - Normal

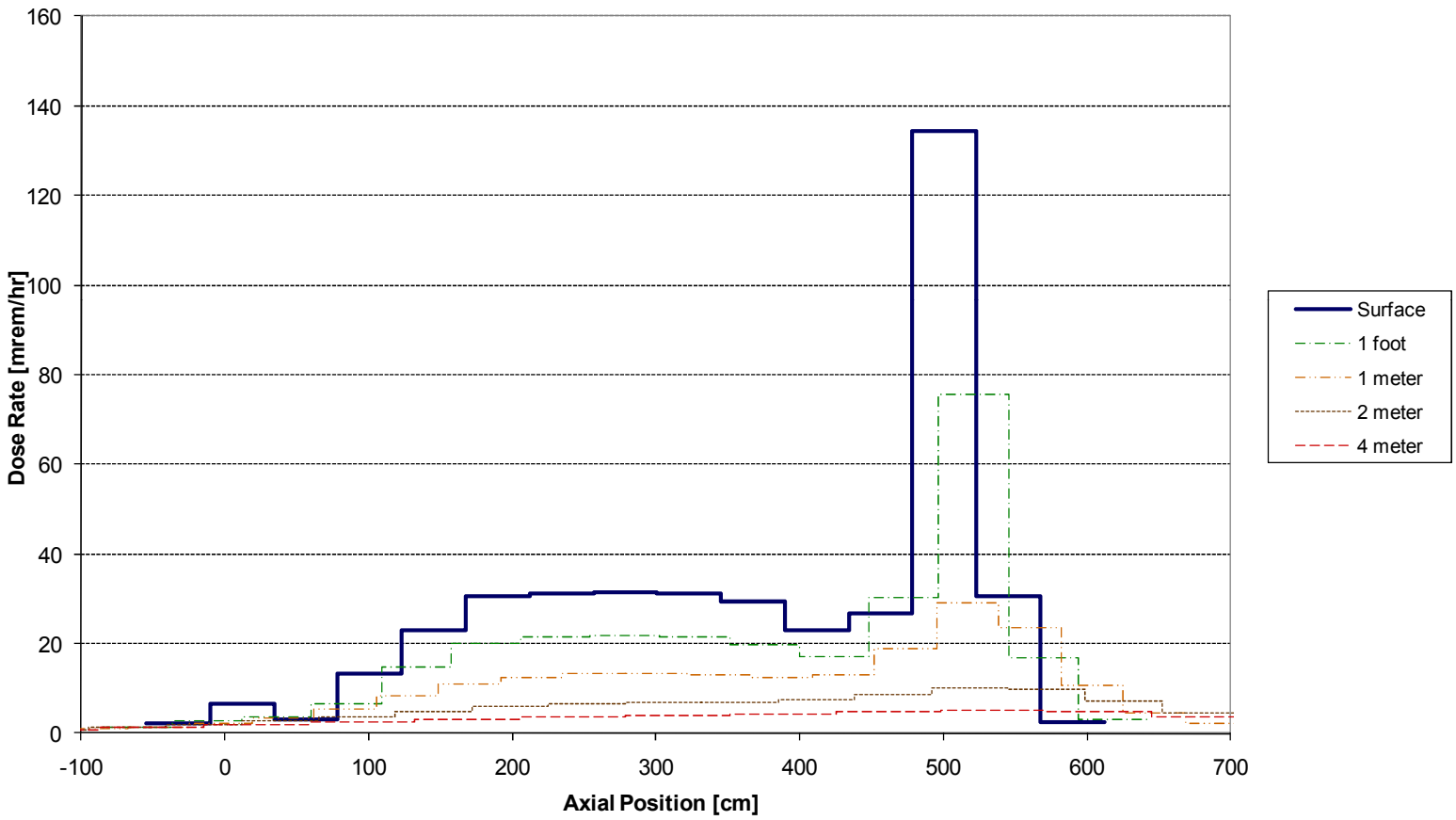

NAC INTERNATIONAL

Transport Cask Side Dose Rates - Accident

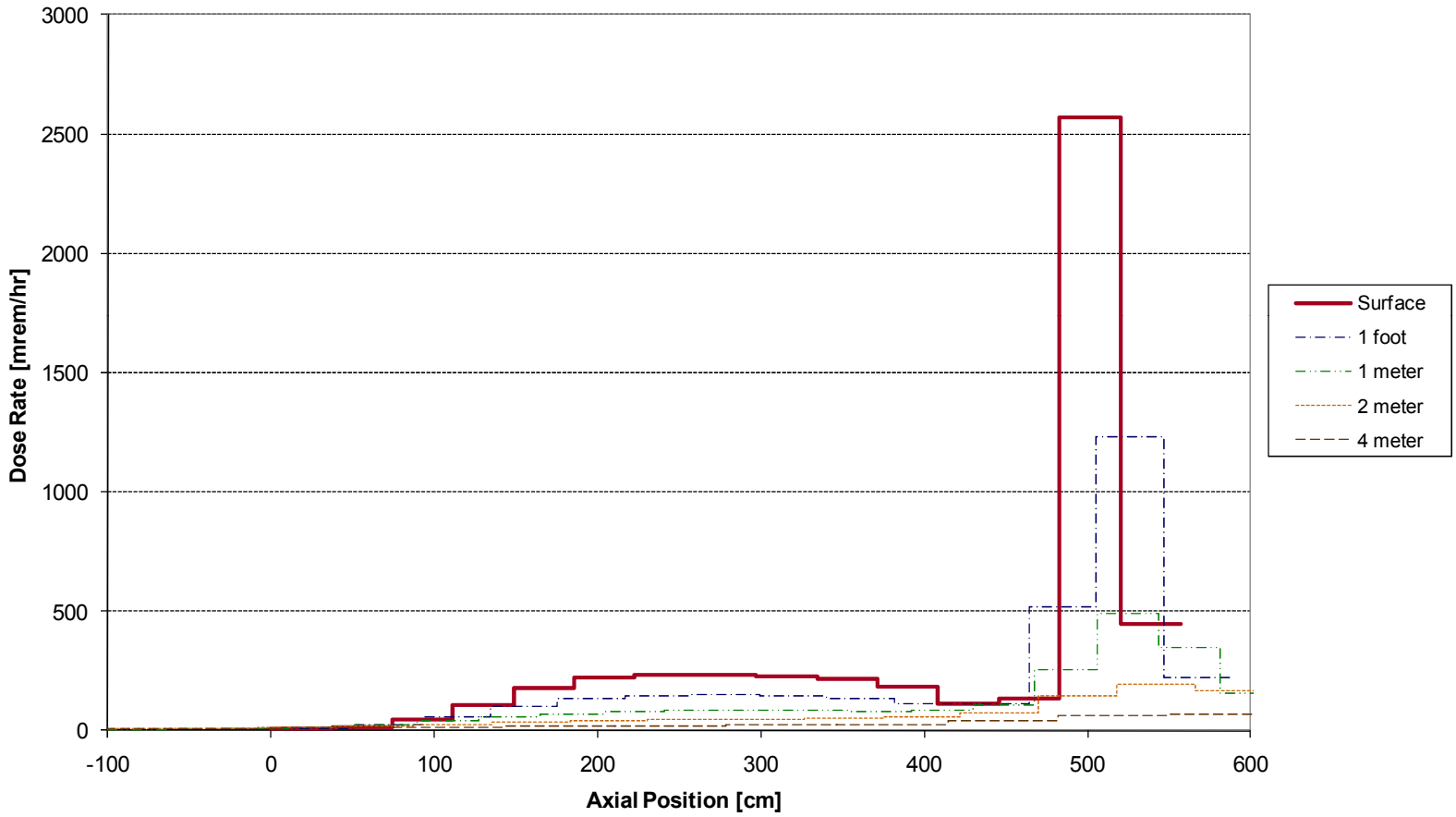

NAC INTERNATIONAL

Maximum Transport Normal Condition Doses

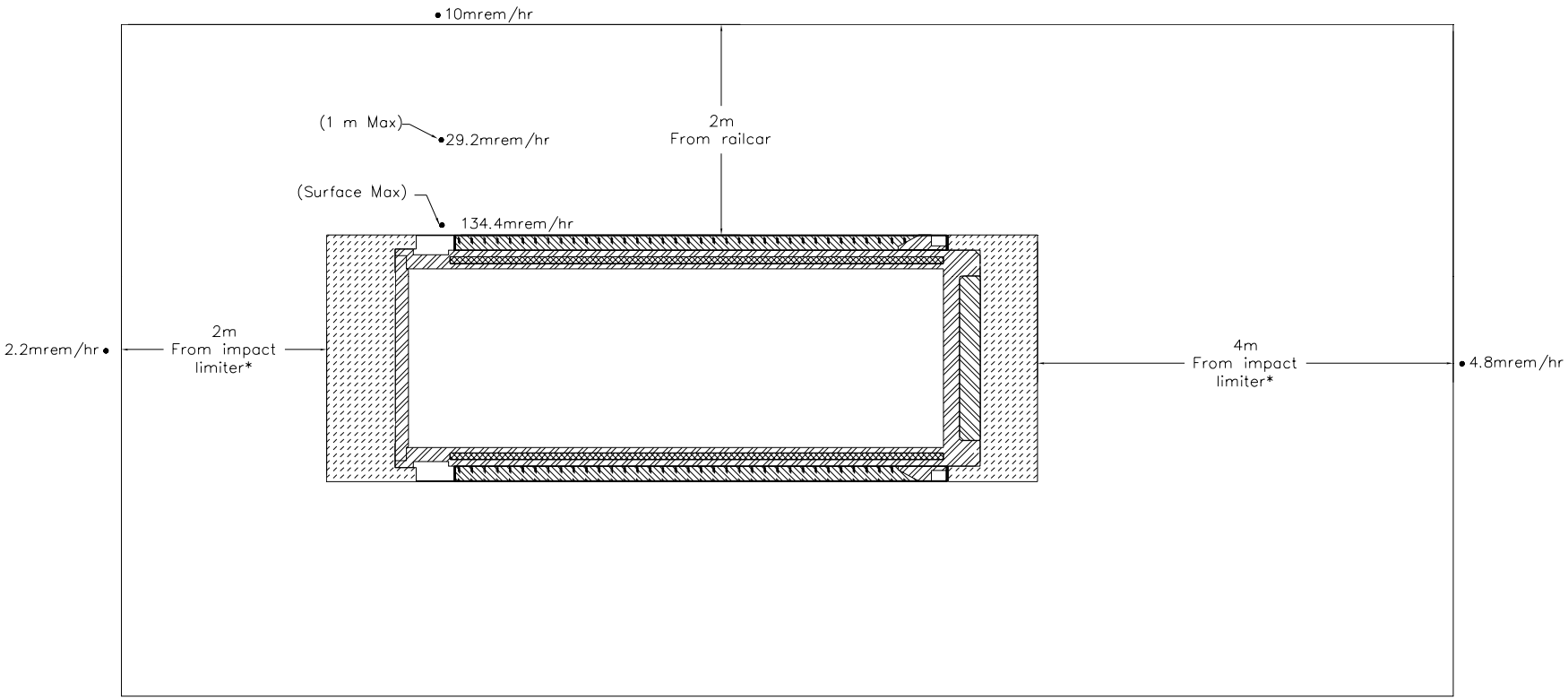

* Axial locations at 2m and 4m from the modeled impact limiter are within the railcar boundary therefore comply with the 2m from railcar requirement

NAC INTERNATIONAL

Maximum Transport Accident Condition Doses

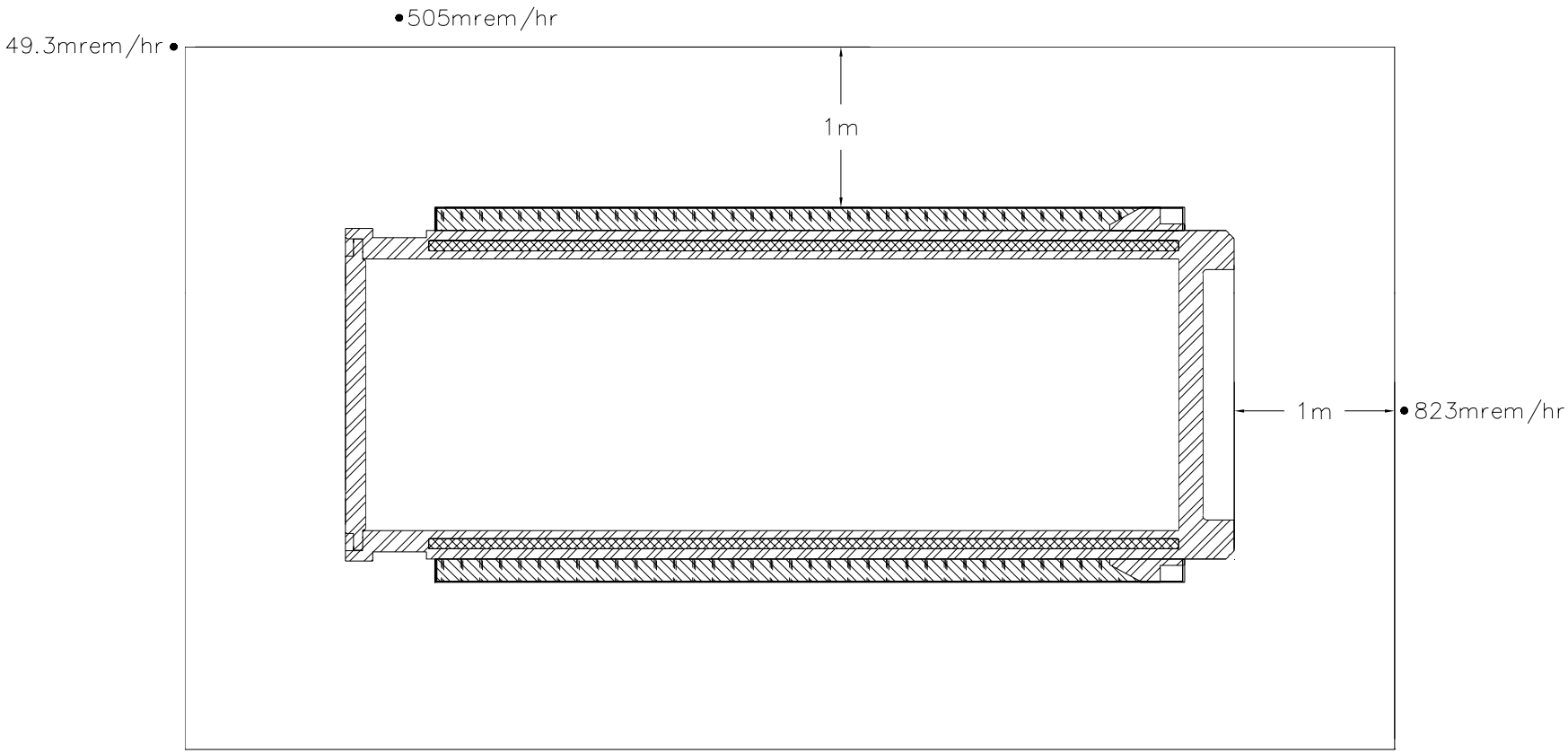

NAC INTERNATIONAL

Criticality Analysis
Method

- Code packages applied
  - MCNP5 for criticality (k_{eff}) calculations
  - SCALE6 TRITON for depletion calculations
    - Transport cask analysis only
    - Isotope generation for actinide-only burnup credit
- MCNP5
  - Monte Carlo transport calculations
  - ENDF-B/VI cross section set
  - LWR benchmark and bias calculation based on critical experiments
    - Fresh fuel benchmark set (no burnup credit)
    - MOX fuel benchmark (burnup credit)
    - HTC spend fuel benchmark (burnup credit)

System Reactivity Control Mechanism

- Criticality control by
  - Flux traps in combination with fixed absorber panels
    - 1.1 weight percent boron stainless steel tubes (equivalent to a minimum 0.017 ^{10}B g/cm^2)
    - 90% effectiveness credited for criticality analysis Tested by neutron attenuation
  - Flux traps control augmented by soluble boron in transfer condition
    - 700 ppm soluble boron credited during transfer/canister loading operations
    - Well below PWR spent fuel pool levels
  - Moderator exclusion applied in storage condition
  - Actinide only burnup credit in transport conditions
    - For hypothetical canister flood scenario (10 CFR 71.55, 71.59) replaced soluble boron credit by actinide-only burnup credit
    - Required burnup ≤ 25 GWd/MTU for all fuel types

Criticality Analysis
Method

- Analysis Steps
  - TRITON Depletion (Transport Only)
    - Establish bounding input parameters (in-core conditions)
    - Develop TRITON (NEWT) 2-D geometry descriptions
    - Extract/process results for MCNP input
  - MCNP Criticality (Transfer, Storage, and Transport)
    - Construct detailed 3-D model
    - Determine most reactive basket configuration
    - Optimum moderator determination
    - Transfer Condition
      - Demonstrate that at 700 ppm boron and 5 wt% ^{235}U enrichment results are below USL
    - Transport Condition
      - Calculate maximum allowed enrichment for no burnup credit
      - Calculate minimum burnup for 5 wt% enrichment

TRITON 2-D Models

- In-core parameters bounding for LWR PWR condition
- Parameters set by review of ORNL NUREGs
- TRITON runs based on use of CENTRM/NEWT (2-D transport)

Parameter	Analyzed
Moderator temperature (K)	610
Fuel temperature (K)	1100
UO_2 density (g/cm^3)	10.5216
Power density (MW/MTU)	60
Moderator boron concentration (ppm)	1000
IFBA / Burnable Absorber Rods	Bounded by BPRA/CEA Models
CE Assembly Type CEA	Full Insertion
B&W and WE CEA	≤20 cm Insertion and/or ≤10 GWd/MTU Full Insertion at Power
B&W and WE Fuel BPRA	Included for Full Burnup Credit

NAC INTERNATIONAL

TRITON 2-D Models
(Sample NEWT Material Plot)

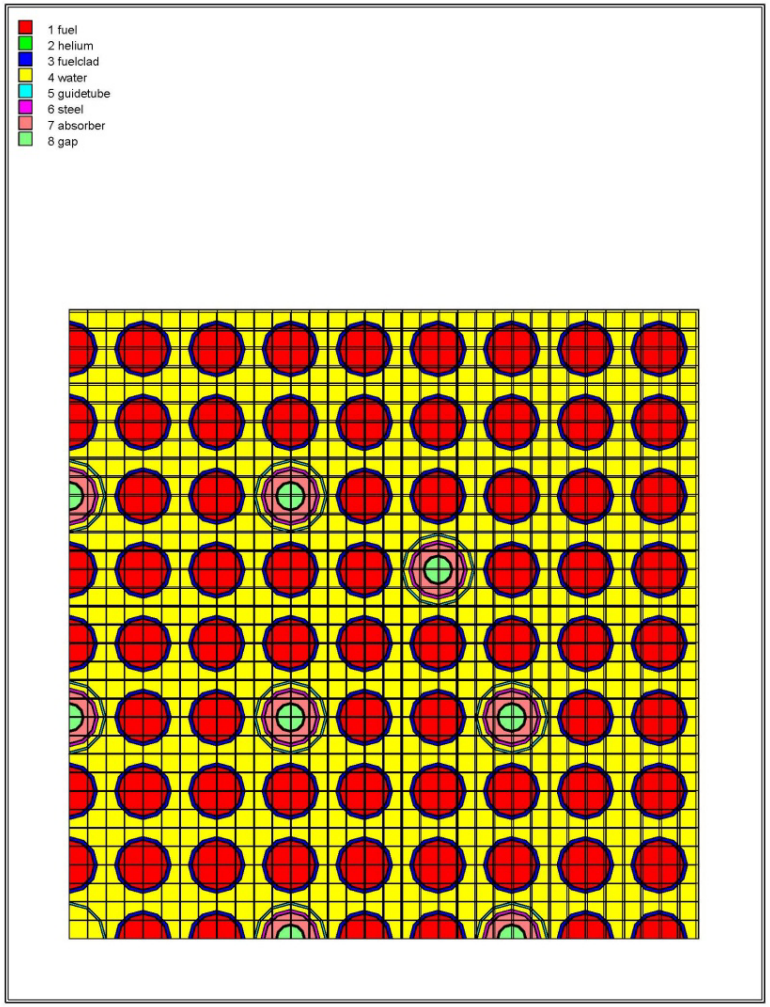

NAC INTERNATIONAL

TRITON Isotope Selection

- Two sets of runs
  - Primary actinide only (marked in italics)
  - Increased actinide / fission product set to establish margin

^{234}U	*^{235}U*	*^{236}U*	*^{238}U*	*^{237}Np*	*^{238}Pu*	*^{239}Pu*
^{240}Pu	*^{241}Pu*	*^{242}Pu*	*^{241}Am*	^{242m}Am	^{243}Am	^{95}Mo
^{99}Tc	^{101}Ru	^{103}Rh	^{109}Ag	^{133}Cs	^{143}Nd	^{147}Sm
^{149}Sm	^{150}Sm	^{151}Sm	^{152}Sm	^{151}Eu	^{153}Eu	^{155}Gd

- Depletion validation by comparison of measured versus calculated k_∞ for PWR experimental rod data

NAC INTERNATIONAL

MCNP 3-D Models

- Complete basket detail and simplified cask structure (primary shields modeled)
- Discrete fuel rod lattice with homogenized end-fitting (fuel assembly nozzle) regions
- Model designed for evaluation of basket component tolerance and mechanical perturbation scenarios
- Active fuel region covered by neutron absorber panels during all operating conditions

UNITAD Basket Cross-Section (VISED)

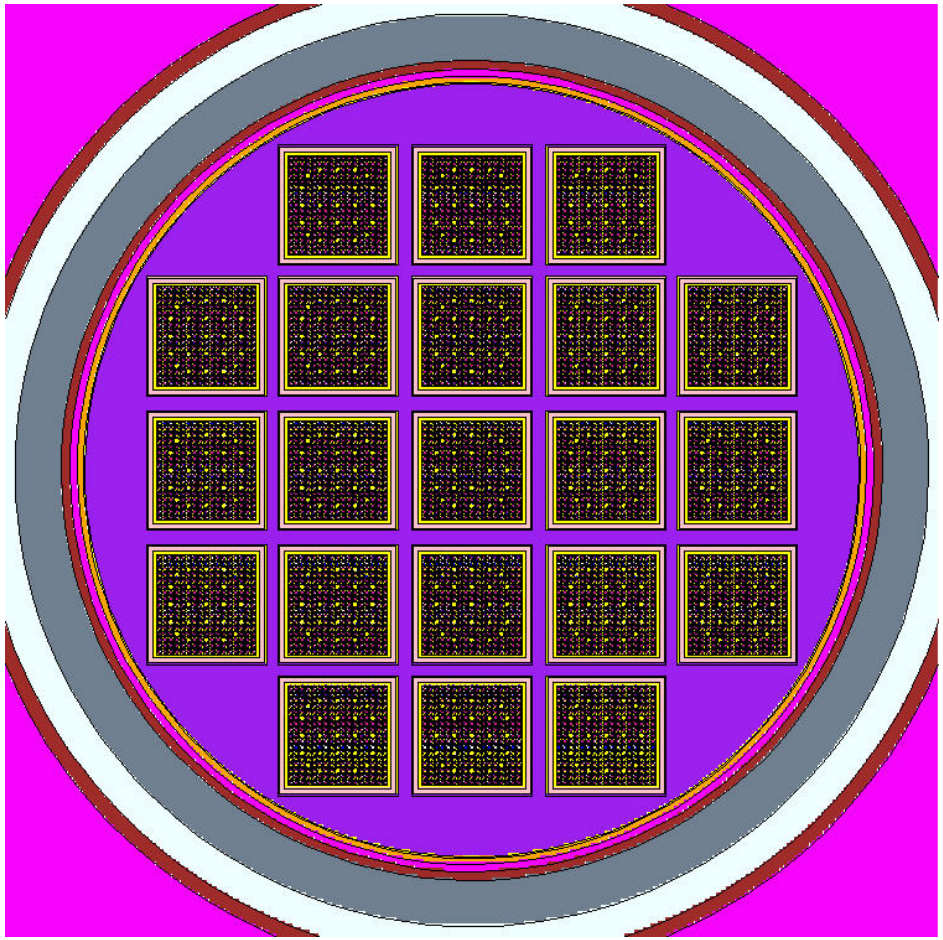

NAC INTERNATIONAL

UNITAD Basket Cross-Section (VISED)

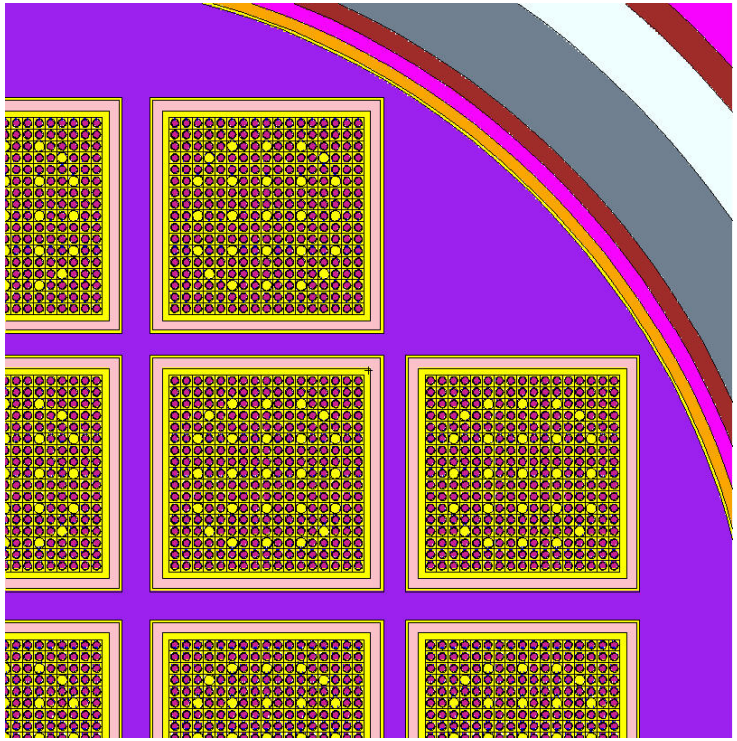

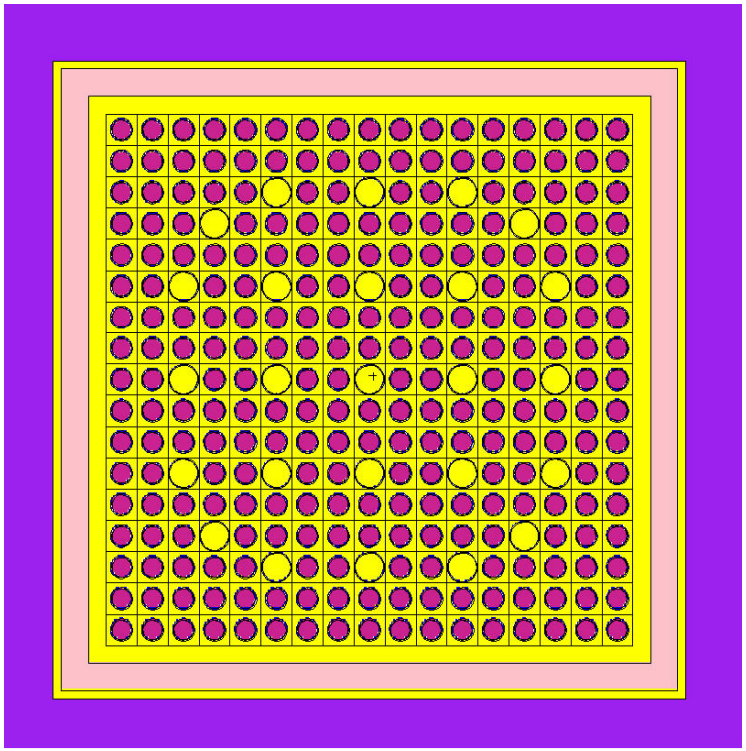

NAC INTERNATIONAL

UNITAD Basket Cross-Section (VISED)

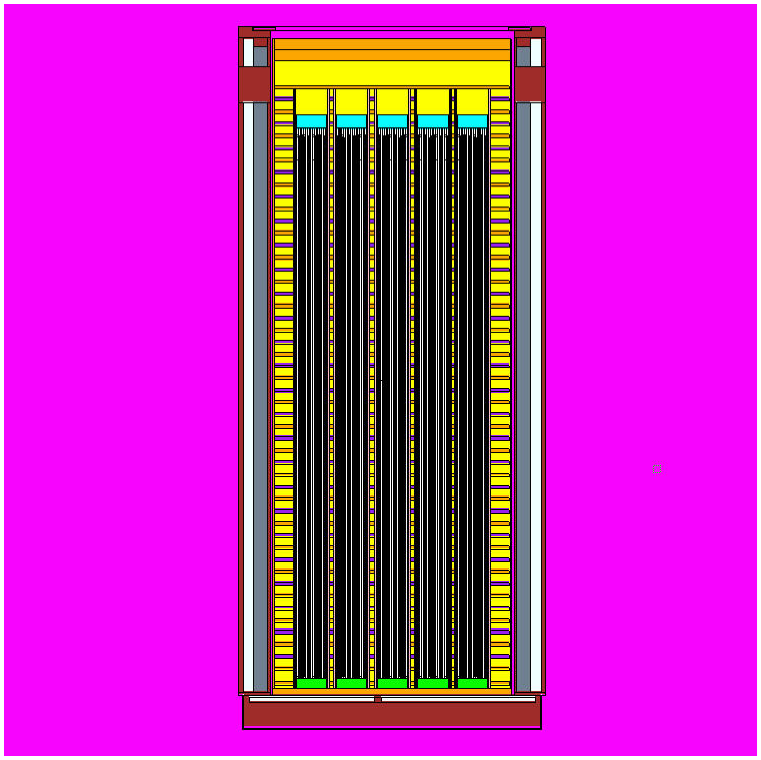

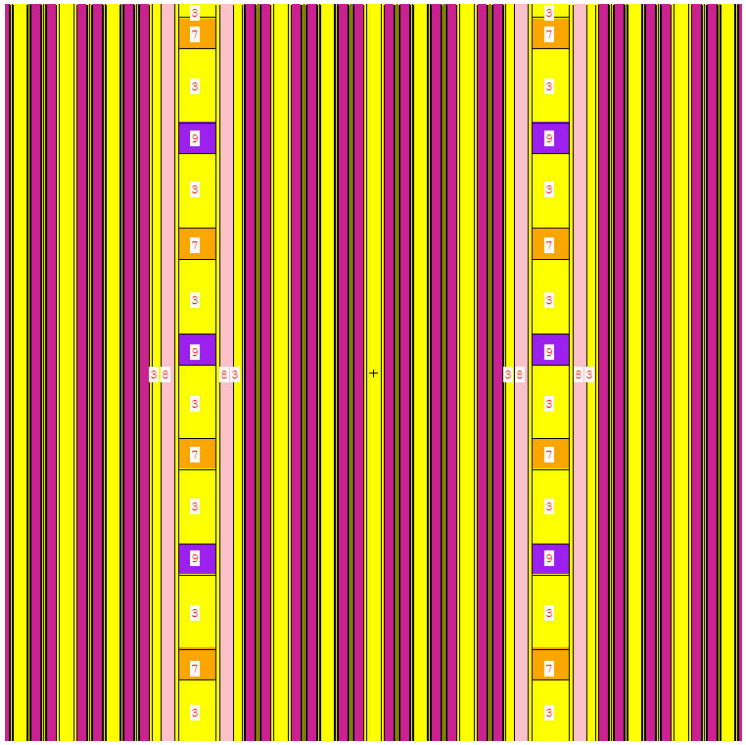

NAC INTERNATIONAL

Assembly Information

- Payload to be defined “undamaged fuel”
  - Intact fuel (i.e., fuel with no clad breach)
  - Breached fuel but no gross clad failure (allowed pin-hole and hairline cracks)
  - No structural damage (e.g., missing or damaged grid or nozzles)
- Divided fuel into grouping
  - General NSSS vendor Westinghouse, B&W, and CE
  - Array configuration: 14x14, 15x15, 16x16, and 17x17
  - Major geometry variations within class (ex. WE 17x17 Std and OFA)
  - Allows for loading of unenriched or low enriched end-blankets (maximum 6 inches each end of active fuel region)
- Maximum enrichment evaluated at 5 wt% ^{235}U average enrichment

NAC INTERNATIONAL

Assembly Information (continued)
Limiting Characteristics

Assembly[3]	Typical No. of Fuel Rods	No. of Guide Tubes[1]	Max Load (MTU)	Max. Enrichment (wt. %^{235}U)[4]	Max Pitch (inch)	Min Clad OD (inch)	Min Clad Thick.[2] (inch)	Max Pellet OD (inch)	Max Active Length (inch)
BW15H1	208	17	0.4858	5.0	0.568	0.43	0.0265	0.3686	144.0
BW15H2	208	17	0.4988	5.0	0.568	0.43	0.025	0.3735	144.0
BW15H3	208	17	0.5006	5.0	0.568	0.428	0.023	0.3742	144.0
BW15H4	208	17	0.4690	5.0	0.568	0.414	0.022	0.3622	144.0
BW17H1	264	25	0.4799	5.0	0.502	0.377	0.022	0.3252	144.0
CE14H1	176	5	0.4167	5.0	0.58	0.44	0.026	0.3805	137.0
CE15H1	216	9	0.4341	5.0	0.55	0.418	0.024	0.359	132.0
CE16H1	236	5	0.4463	5.0	0.5063	0.382	0.025	0.325	150.0
WE14H1	179	17	0.4188	5.0	0.556	0.40	0.0162	0.3674	145.2
WE15H1	204	21	0.4720	5.0	0.563	0.422	0.0242	0.3669	144.0
WE15H2	204	21	0.4469	5.0	0.563	0.417	0.0265	0.357	144.0
WE17H1	264	25	0.4740	5.0	0.496	0.372	0.0205	0.3232	144.0
WE17H2	264	25	0.4327	5.0	0.496	0.36	0.0225	0.3088	144.0

[1] Combined number of guide and instrument tubes.
[2] Clad is zirconium alloy.
[3] Assembly characteristics represent cold, unirradiated, nominal configurations.
[4] Minimums soluble boron of 1(700 n.

NAC INTERNATIONAL

Initial Reactivity Comparisons

- Each fuel type evaluated in transfer and transport configuration for
  - Relative reactivity to determine fuel types for basket tolerance and mechanical perturbation studies
  - Pellet to clad gap condition (i.e., flooding of the pellet to clad gap)
  - Borated to unborated water reactivity trends
  - Fresh fuel used in all most reactive configuration studies

Baseline Reactivity Comparisons

Assembly Type	0 ppm 5.0 wt% Dry Gap No Insert	0 ppm 5.0 wt% Dry Gap No Insert	0 ppm 5.0 wt% Wet Gap No Insert	Dry Gap to Wet Gap	700 ppm 5.0 wt% Dry Gap No Insert	700 ppm 5.0 wt% Dry Gap No Insert	700 ppm 5.0 wt% Wet Gap No Insert	Dry Gap to Wet Gap
	k_{eff}	$\Delta k_{eff}/\sigma$	k_{eff}	$\Delta k_{eff}/\sigma$	k_{eff}	$\Delta k_{eff}/\sigma$	k_{eff}	$\Delta k_{eff}/\sigma$
CE14H1	0.92703	-28.9	0.93328	7.6	0.85048	-39.8	0.85820	9.4
CE16H1	0.92653	-28.8	0.93372	8.5	0.85234	-38.3	0.86015	9.8
BW15H1	0.94812	-3.0	0.95646	10.3	0.87945	-5.3	0.88894	11.8
BW15H2	0.94912	-1.8	0.95779	10.8	0.88421	0.6	0.89185	9.6
BW15H3	0.95438	4.6	0.96380	11.4	0.88573	2.5	0.89404	10.2
BW15H4	0.96378	16.1	0.97198	9.9	0.88935	7.0	0.89699	9.6
BW17H1	0.95201	1.8	0.96216	12.5	0.88625	3.1	0.89557	11.8
WE14H1	0.93915	-13.8	0.94038	1.5	0.86318	-25.0	0.86239	-0.9
WE15H1	0.95324	3.3	0.96056	9.1	0.88336	-0.4	0.88885	6.8
WE15H2	0.95268	2.6	0.96058	9.9	0.87836	-6.6	0.88419	7.2
WE17H1	0.95055	--	0.96008	11.8	0.88372	--	0.89093	8.9
WE17H2	0.95784	9.0	0.96313	6.6	0.88279	-1.2	0.88704	5.3

NAC INTERNATIONAL

Tolerance and Shift Analysis Method

- Evaluated basket tolerances on primary components
  - Fuel tube / absorber width and thickness
  - Disk opening location and size (maximum flux trap)
  - Disk thickness and spacing
- Shifting evaluated for fuel assembly in tube and tube plates within basket
- Components evaluated individually and in combination

Tolerance and Shift Analysis Results

- Evaluated basket tolerances with full load of undamaged maximum reactivity fuel types
  - Confirmed with sample types from other assembly classes
  - Limited statistically significant information from centered or shifted manufacturing tolerance studies (no effect at maximum reactivity plate configuration)
  - Shifted components increase system reactivity
    - Assemblies shifted to cask center
    - Fuel tube plates shifted outward to disk opening cut-out

Tolerance and Shift Analysis Results (cont'd)

- Sample fuel type combined tolerance study

Sol. B	Tube Tol.			Disk Tol.				Plate	WE17H2	
(ppm)	Width	Thickness	Cut-Out	Op Width	Location	Thickness	Spacing	Loc.	k_{eff}	$\Delta k_{eff}/\sigma$
0	Nom	Nom	Nom	Nom	Nom	Nom	Nom	In	0.97465	--
0	Max	Min	Min	Max	Min	Max	Min	In	0.97664	2.5
0	Nom	Nom	Nom	Nom	Nom	Nom	Nom	Out	0.98881	--
0	Min	Max	Max	Max	Min	Max	Min	Out	0.98954	0.9
700	Nom	Nom	Nom	Nom	Nom	Nom	Nom	In	0.89606	--
700	Max	Min	Min	Max	Min	Max	Min	In	0.89745	1.8
700	Nom	Nom	Nom	Nom	Nom	Nom	Nom	Out	0.90781	--
700	Min	Max	Max	Max	Min	Max	Min	Out	0.90930	1.8

NAC INTERNATIONAL

Optimum Moderator / Fuel Studies

- Determine maximum reactivity moderator in the UNITAD canister and outside the cask
  - Due to the large neutron shield on concrete and transfer casks little to no effect from single cask versus array or exterior moderator density
  - Water space in canister sufficient to decouple exterior condition in transport cask
- Optimum moderator for un-damaged contents is full density borated or unborated water (0.9982 g/cc for unborated water)

Optimum Moderator / Fuel Studies

- Sample curves for system reactivity as a function of moderator density
  - 0 ppm Soluble Boron

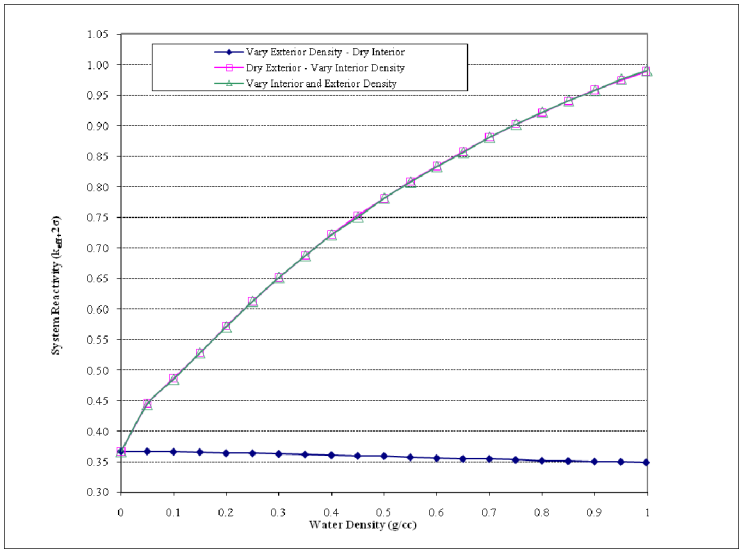

  - 700 ppm Soluble Boron

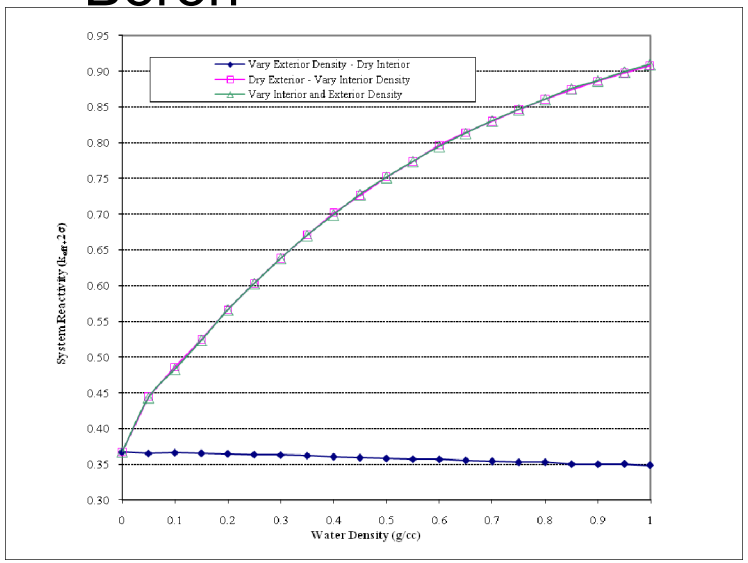

NAC INTERNATIONAL

Code Bias Calculations

- MCNP
  - Fresh Fuel
    - 183 LEU-COMP-THERM Experiments – International Handbook
    - USL = 0.9376
  - MOX Fuel
    - 59 International Handbook Experiments with Pu as the primary fissile material
    - USL = 0.9331
  - Spent Fuel (HTC)
    - Haut Tax de Combustion (HTC) Program Experiments
    - USL = 0.9369

Bias Calculations (Continued)

- TRITON
  - Spent fuel isotopic benchmark from LWR reactor samples (55 radiochemical assay samples)
  - k_{eff} comparison for measured versus calculated isotopics
  - Isotopic bias and bias uncertainty determined
  - Isotopic bias/b value is 0.00739
  - Conservative USL-bias applied is 0.91 (actual value based on minimum USL is 0.92641)

Storage and Transfer Cask Maximum Reactivity Summary

- Flooded condition with 700 ppm boron in moderator
- Canister in concrete cask (VCC) always dry
- USL is 0.9376

Cask Model.	Water Density (g/cc)				
	Lattice	Exterior	k_{eff}	σ	$k_{eff}+2\sigma$
Transfer	0.9982	0.0001	0.91757	0.00056	0.91869
Transfer	0.0001	0.0001	0.38420	0.00040	0.38500
Transfer	0.0001	09982	0.36621	0.00041	0.36703
Storage	0.0001	0.0001	0.37246	0.00040	0.37326
Storage	0.0001	0.9982	0.34739	0.00040	0.34819

NAC INTERNATIONAL

Transport Allowed Loading and Maximum Reactivity For Each Fuel Type

	Fresh Fuel (0 GWd/MTU)		Actinide-Only Burnup Credit (5 wt% ^{235}U)	
Assembly Type	Max. Initial Enrichment (wt% ^{235}U)	$k_{eff} + 2\sigma$	Min. Burnup (GWd/MTU)	$k_{eff} + 2\sigma$
CE14H1	4.4%	0.93387	15	0.90687
CE15H1	4.5%	0.93714	15	0.89968
CE16H1	4.4%	0.93445	15	0.90792
BW15H1	3.8%	0.93445	20	0.90381
BW15H2	3.8%	0.93658	20	0.90657
BW15H3	3.7%	0.93476	25	0.89277
BW15H4	3.6%	0.93616	25	0.89818
BW17H1	3.7%	0.93387	25	0.89070
WE14H1	4.4%	0.93716	15	0.90787
WE15H1	3.8%	0.93507	20	0.90904
WE15H2	3.8%	0.93469	20	0.90752
WE17H1	3.8%	0.93707	20	0.90969
WE17H2	3.8%	0.93745	25	0.89262

NAC INTERNATIONAL

Transport Maximum Reactivity Summary

Pellet/ Clad Gap	Cask Moderator		Cask Array (SC/Array)	Fresh Fuel	Burnup Credit
	Interior	Exterior			
	[g/cm^3]	[g/cm^3]		$k_{eff} \pm 2\sigma$	$k_{eff}+2\sigma$
Dry	0.0	0.0	SC	0.36076	0.36658
Dry	0.9982	0.0	SC	0.92877	0.89886
Dry	0.9982	0.9982	SC	0.92788	0.90010
Dry	0.0	0.0	Infinite/20cm	0.36094	0.36703
Dry	0.9982	0.9982	Infinite/20cm	0.92788	0.89836
Wet	0.9982	0.9982	Infinite/20cm	0.93557	0.90868
Wet	0.9982	0.0	Infinite/20cm	0.93670	0.90896
Wet	0.9982	0.0	Infinite/Touch	0.93707	0.90969
Limit	--	--	--	0.9376	0.910

NAC INTERNATIONAL

UNITAD Operations Overview

NAC INTERNATIONAL

UNITAD Storage Operations Overview

- UNITAD storage operations and equipment are essentially identical to current UMS loading operations
- UNITAD storage procedures are provided in Chapter 8 of the SAR
- TAD canister loading and preparation activities use standard industry procedures, equipment and processes.

UNITAD Transfer Cask with Empty UNITAD Canister Moving to Spent Fuel Pool for Loading

NAC INTERNATIONAL

UNITAD Storage Operations Sequence

- Canister loading operations are performed in the spent fuel pool (SFP) with canister positioned in the UNITAD Transfer Cask (UTC)
- Single closure lid is installed underwater in SFP, and UTC with loaded canister is moved to cask preparation area (in pool shelf or cask decontamination area)
- Canister is partially drained, closure lid is welded to canister shell in minimum of three passes with VT/PT examinations of each weld pass (e.g., root, mid-pane and final)
- Closure lid is hydrostatically tested

CSNF Loading Into UNITAD Canister

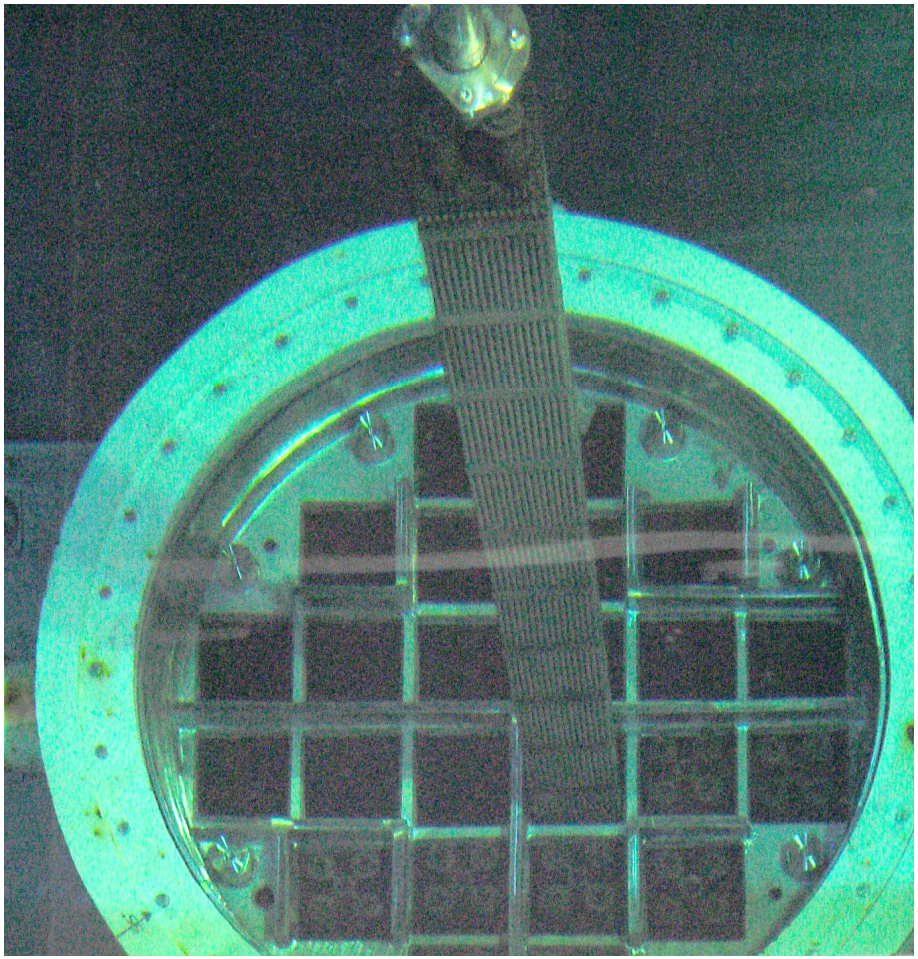

NAC INTERNATIONAL

Installing Closure Lid on UNITAD Canister in Spent Fuel Pool

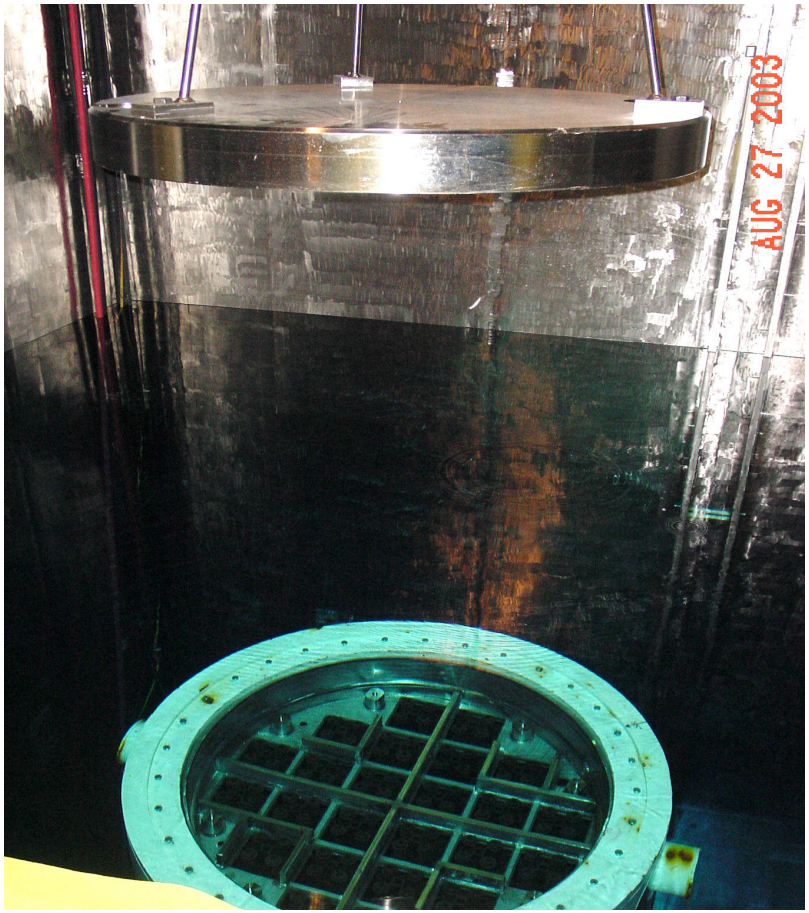

NAC INTERNATIONAL

UNITAD Storage Operations Sequence (Cont.)

- Closure ring is welded on the lid providing a redundant closure of the lid to shell weld
- The TAD canister is drained and vacuum dried using a Vacuum Drying System (VDS)
- Canister dryness is confirmed and cavity is further evacuated to < 3 torr
- High purity helium is backfilled into the cavity to a pressure slightly greater than atmospheric
- Thermal analysis of canister in UTC during vacuum drying provides unlimited vacuum drying times

UNITAD Transfer Cask with Loaded UNITAD Canister in Spent Fuel Pool

NAC INTERNATIONAL

UNITAD Canister Closure Lid Welding Operations

NAC INTERNATIONAL

UNITAD Storage Operations Sequence

- Transfer of canister to the VCC utilizes the UTC and the transfer adapter to operate the UTC shield doors
- Canister lifting system lifts canister off of shield doors allowing the transfer adapter hydraulic system to open doors
- Canister is slowly lowered into the VCC until it rests on the pedestal

NAC INTERNATIONAL

Transfer Adapter Installed on Vertical Concrete Cask

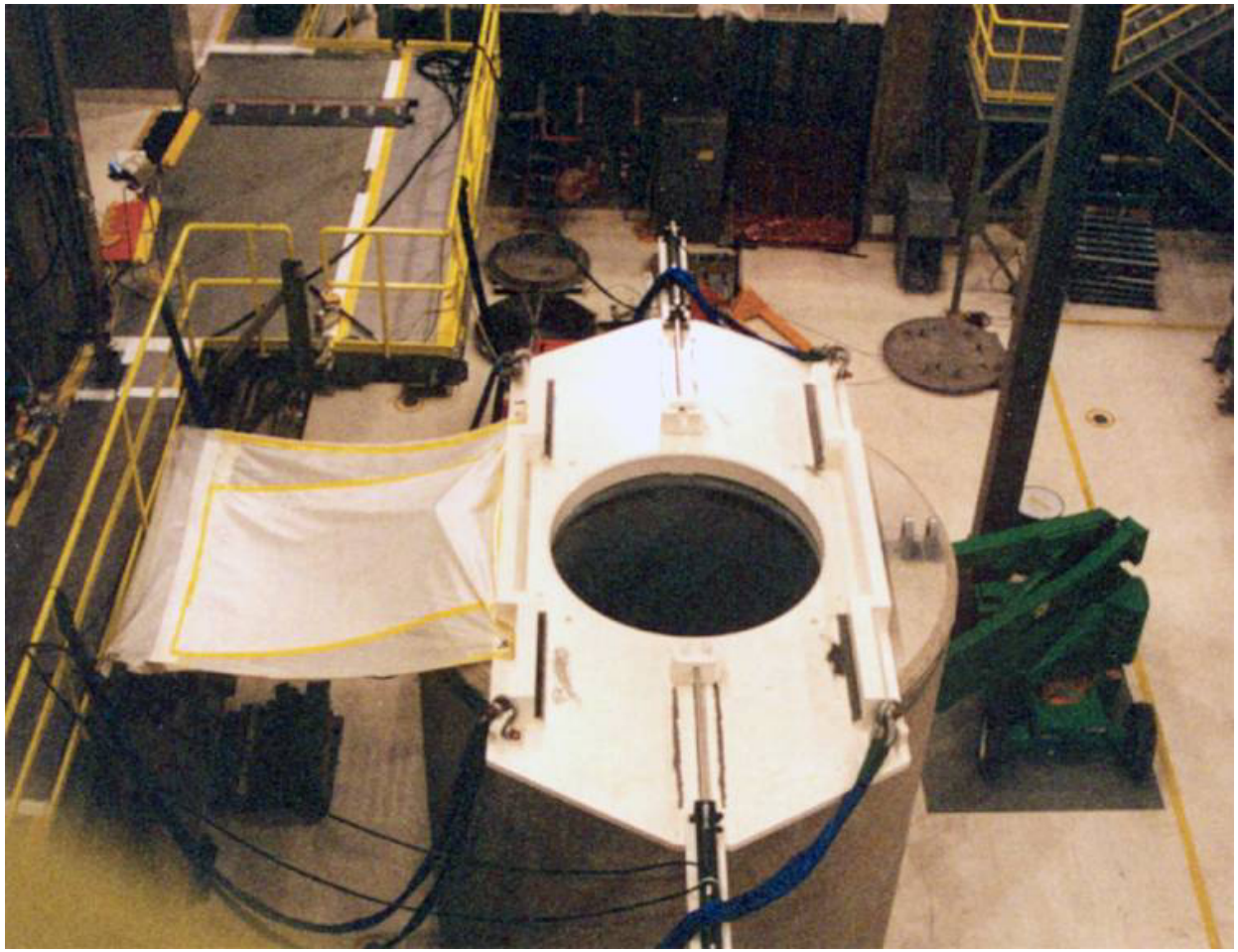

NAC INTERNATIONAL

UNITAD Transfer Cask Positioned on VCC for UNITAD Canister Transfer

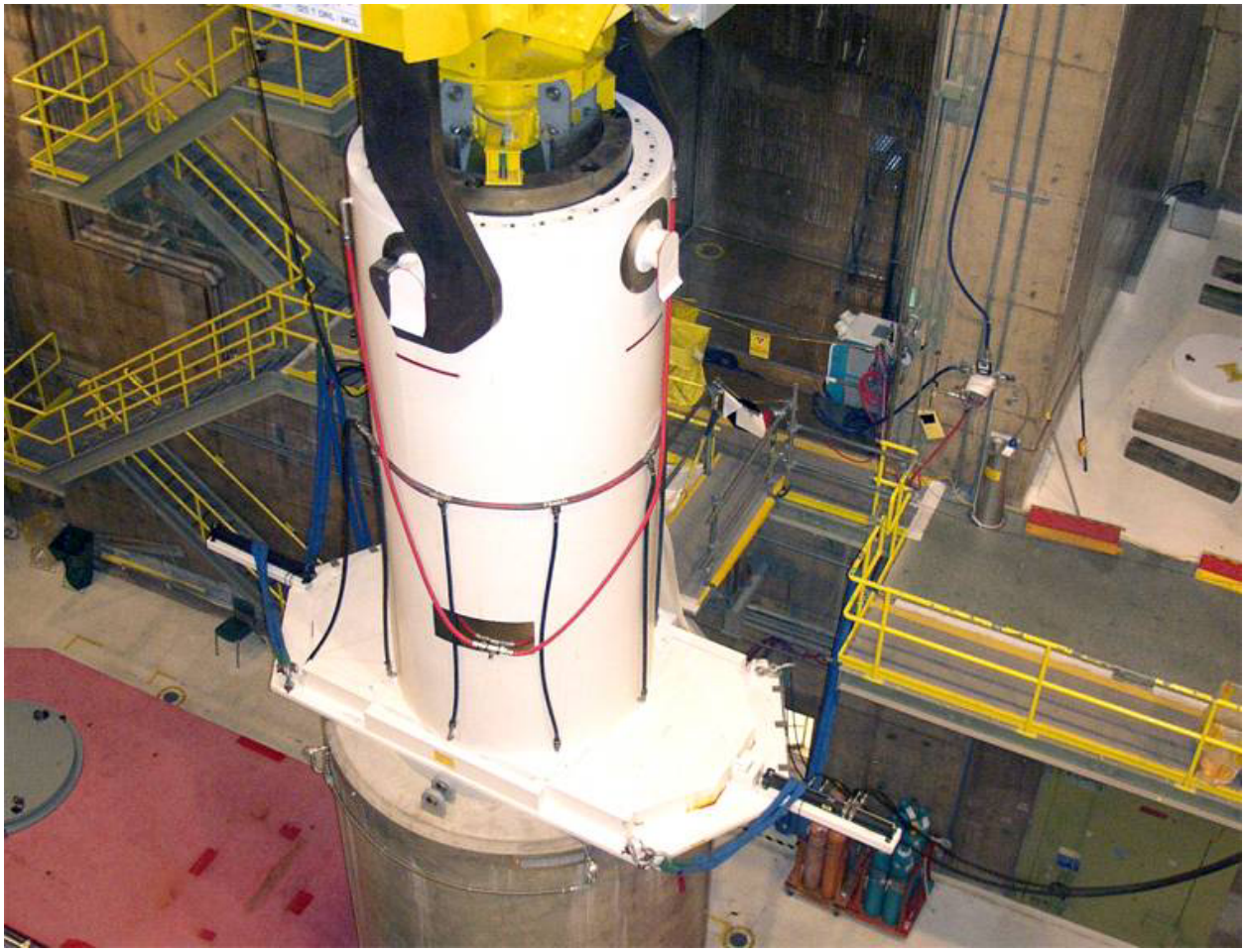

NAC INTERNATIONAL

UNITAD Storage Operations Sequence

- The VCC lid is installed and secured by bolting
- The VCC is moved by cask transporter, truck or railcar to the ISFSI location
- The VCC is positioned on the ISFSI pad, final dose measurements are performed and the temperature monitoring system connected (if used)
- The UNITAD System is now in safe long term storage operations at the reactor site.

Canister Single Failure Proof Handling Sling System Installation

NAC INTERNATIONAL

UNITAD Canister Positioned in VCC Following Transfer

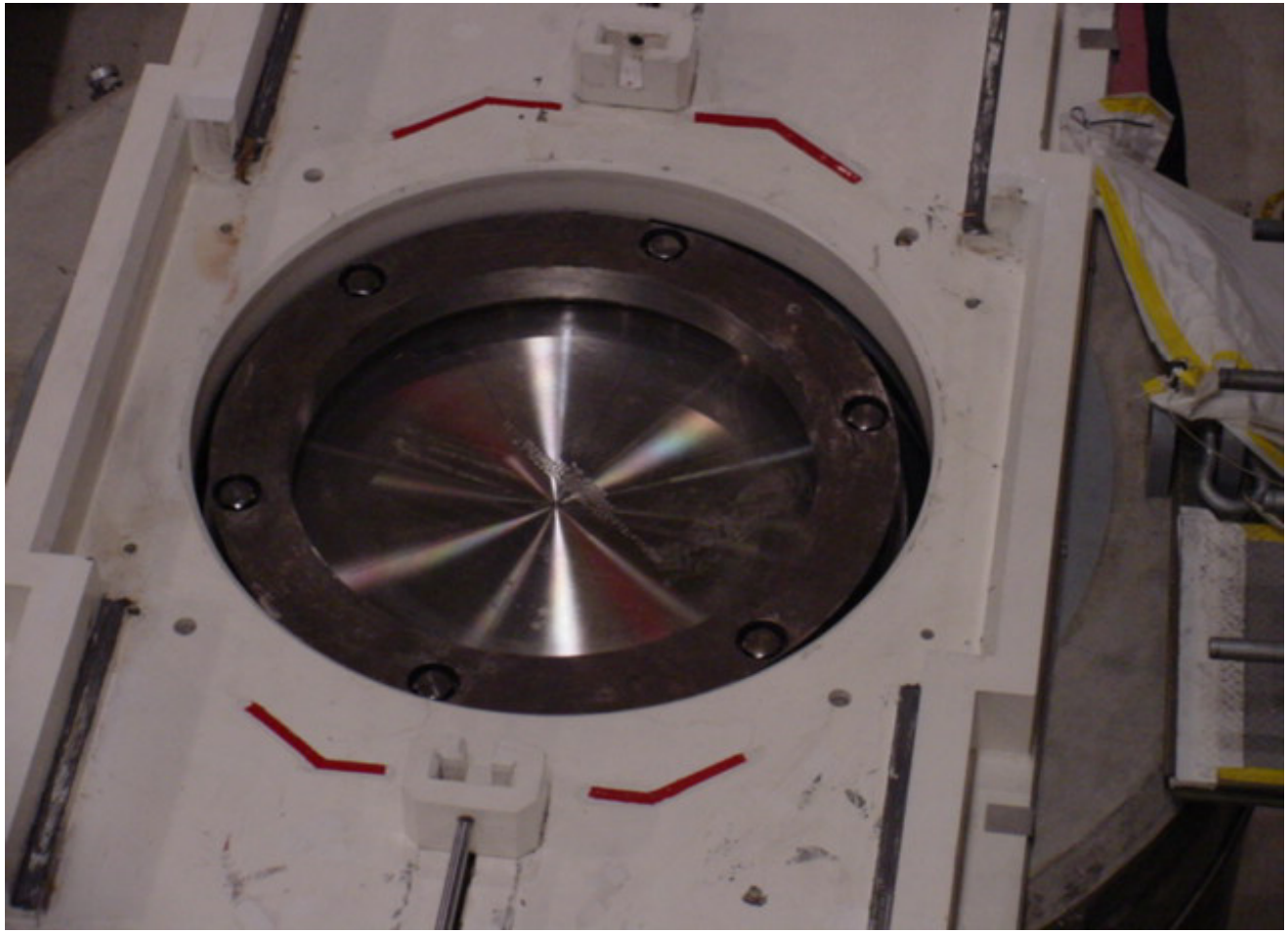

NAC INTERNATIONAL

VCC Lid Installation

NAC INTERNATIONAL

Loaded UNITAD VCC Movement From Fuel Building

NAC INTERNATIONAL

UNITAD VCC Transported to ISFSI Storage Pad

NAC INTERNATIONAL

UNITAD Transport Cask Operations Overview

- UNITAD Transport Operations are essentially identical to current UMS and NAC-STC transport cask operations
- UNITAD transport procedures are provided in Chapter 7 of the SAR
- UNITAD transport cask loading and preparation activities, and transport cask unloading use standard industry procedures, equipment and processes.

UNITAD Transport Cask Operations Overview

- The UNITAD Transport Cask is received and positioned at the reactor loading facility. The transport cask lid is unbolted and removed
- The VCC is returned to the fuel building or exterior Canister Transfer Facility (CTF)
- Canister is transferred from the VCC to the transportation cask
- Transport cask is closed, leak tested and placed on the transport shipping frame attached to the transport vehicle

NAC INTERNATIONAL

UNITAD Transport Cask Operations Overview

- The transport cask front trunnions are removed and stored on vehicle and replaced with shield plates
- The front and rear impact limiters are installed and a security seal is installed on the front limiter
- The personnel barrier is installed around the central section of the cask and locks are installed and closed
- The transport cask and vehicle and verified as appropriately labeled and placarded and then released as an Exclusive Use Transport

NAC INTERNATIONAL

Licensing Overview

NAC INTERNATIONAL

UNITAD Storage Licensing Approach and Strategy

- Docket 72-1015
- Amendment 6 to NAC-UMS CoC
- FSAR, Rev. 7
- Specific appendix prepared for each chapter (except Chapter 12, Operating Controls and Limits)
- Base document referenced as appropriate
- Addition to CoC and Technical Specifications
- Not applicable to current UMS users

UNITAD Transport Licensing Approach and Strategy

- Docket 71-9270
- Revision 4 to NAC-UMS CoC 9270
- SAR, Rev. 2
- Specific appendix prepared for each chapter
- Base document referenced as appropriate
- Addition to CoC
- Not applicable to current UMS users

Schedule

- **Based on published NRC timeliness goals per RIS 2005-27, Rev 1**
- **Initial submittals** *(Storage & Transport)*
  - September 2009
- **Acceptance review complete & docketing**
  - Within 60 days from submittal
- **Final transport CoC issued – October 2010**
- **Storage CoC completed – December 2010**
  - Effective date – May 2011 (DFR)

Questions?

NAC INTERNATIONAL