GE Hitachi Nuclear Energy

Richard E. Kingston
Vice President, ESBWR Licensing

PO Box 780 M/C A-65
Wilmington, NC 28402-0780
USA

T 910 819 6192
F 910 362 6192
rick.kingston@ge.com

MFN 09-722 Docket No. 52-010

November 16, 2009

U.S. Nuclear Regulatory Commission
Document Control Desk
Washington, D.C. 20555-0001

Subject: **Response to NRC Request for Additional Information Letter No. 381 Related to ESBWR Design Certification Application - RAI Numbers 14.3-455 and 14.3-456**

Enclosure 1 contains the GE Hitachi Nuclear Energy (GEH) response to the U.S. Nuclear Regulatory Commission (NRC) Request for Additional Information (RAI) 14.3-455 and 14.3-456 (Reference 1).

ESBWR Design Control Document (DCD) markups are provided in Enclosure 2.

If you have any questions about the information provided, please contact me.
.
Sincerely,

FOR

Richard E. Kingston
Vice President, ESBWR Licensing

Reference:

1. MFN 09-676, Letter from the U.S. Nuclear Regulatory Commission to Jerald G. Head, Request for Additional Information Letter No. 381, Related To ESBWR Design Certification Application, dated October 21, 2009

Enclosures:

1. Response to NRC Request for Additional Information Letter No. 381 Related to ESBWR Design Certification Application - RAI Numbers 14.3-455 and 14.3-456.
2. Response to NRC Request for Additional Information Letter No. 381 Related to ESBWR Design Certification Application - RAI Numbers 14.3-455 and 14.3-456 – DCD Markups

cc:	AE Cubbage	USNRC (with enclosures)
	J G Head	GEH/Wilmington (with enclosures)
	DH Hinds	GEH/Wilmington (with enclosures)
	LF Dougherty	GEH/Wilmington (with enclosures)
	eDRF Section	0000-0109-7166

Enclosure 1

MFN 09-722

Response to NRC Request for

Additional Information Letter No. 381

Related to ESBWR Design Certification Application

RAI Numbers 14.3-455 and 14.3-456

NRC RAI 14.3-455

Missing Valve in Tier 1 Figure 2.12.3-1

The staff noted in the review of Revision 6 of the Design Control Document (DCD). Tier 1, Figure 2.12.3-1, "Reactor Component Cooling Water System Functional Arrangement," the cross connect valve, on the suction side of the reactor component cooling water system (RCCWS) pumps, between train 'A' and train 'B' was omitted. This valve was shown on Revision 5 of the DCD functional arrangement. Consequently, the applicant needs to describe the basis for the removal of this valve and describe how train isolation is accomplished without this valve.

GEH Response

In processing changes for Revision 6 of the ESBWR DCD, Tier 1, certain functional arrangement figures were updated and redrawn. In this particular case, Figure 2.12.3-1, "Reactor Component Cooling Water System Functional Arrangement," was redrawn to simplify the figure with regard to showing valves consistent with the Tier 1 legend for figures (Figure 1.2-1, "Legend for Tier 1 System Diagrams"). The cross connect valve on the suction side of the reactor component cooling water pumps was inadvertently left off of the revised figure. Thus, the valve was not "removed" from the figure. As a result of the "error" in revising the figure, GEH initiated Corrective Action Report (CAR) 49783 to evaluate the condition and to initiate actions regarding the extent of conditions.

GEH reviewed the Tier 1 system functional arrangements in Revision 6 and identified two additional figures for which a change is needed. These figures are Figures 2.4.1-1 and 2.16.3-1. The label for the inline vessel was inadvertently removed during the revision to Figure 2.4.1-1. Note 3 on Figure 2.16.3-1 should have been removed because it is not relevant for Tier 1 functional arrangement.

DCD Impact

DCD Tier 1 will be revised as shown on the marked-up pages.

NRC RAI 14.3-456

Revise acceptance criteria to include reference to ASME Code Data Report N-1/N-1A

In ESBWR DCD, Rev. 6, Table 2.1.1-3, the Acceptance Criteria for Item 3.a3 states the following:

> *ASME Code Data Report(s) (including N-5 Data reports, where applicable)(certified, when required by ASME Code) and inspection reports exist and conclude that the RPV and its components identified in Table 2.1.1-1 (shroud, shroud support, top guide, core plate, control rod guide tubes and fuel supports) as ASME Code Section III are fabricated, installed, and inspected in accordance with ASME Code Section III requirements.*

In a conference call with the applicant on October 13, 2009, the staff discussed ITAAC Table 2.1.1 for further clarification and consistency. Based on that conference call, the staff requests that this statement in the DCD be revised to replace ASME Code Data Report N-5 with ASME Code Data Report N-1/N-1A, which would be more appropriate for the reactor vessel and its appurtenances. The staff believes that this change will be in line with the ASME Code N-stamping process.

GEH Response

GEH agrees with the NRC in that the N-1/N-1A ASME Code Data Report is more appropriate for the RPV and its appurtenances so as to be in line with the ASME Code N-stamping process.

DCD Impact

DCD Tier 1, Section 2.1.1 will be revised as noted in the attached markup.

Enclosure 2

MFN 09-722

Response to NRC Request for Additional Information Letter No. 381 Related to ESBWR Design Certification Application

RAI Numbers 14.3-455 and 14.3-456

DCD Markups

Table 2.1.1-3

ITAAC For The Reactor Pressure Vessel and Internals

Design Commitment	Inspections, Tests, Analyses	Acceptance Criteria
1. The functional arrangement of the RPV and Internals is as described in the Design Description of Subsection 2.1.1, Table 2.1.1-1 and Figure 2.1.1-1.	Inspections of the as-built RPV and Internals will be conducted.	The RPV and Intermals and core arrangement conforms to the functional arrangement described in the Design Description of this Subsection 2.1.1, Table 2.1.1-1 and Figure 2.1.1-1.
2. The key dimensions (and acceptable variations) of the as-built RPV are as described in Table 2.1.1-2.	Inspection of the as-built RPV key dimensions (and acceptable variations thereof) will be conducted.	The RPV conforms to the key dimensions (and acceptable variations) described in Table 2.1.1-2.
3.a1 The RPV and its components identified in Table 2.1.1-1 (shroud, shroud support, top guide, core plate, control rod guide tubes and fuel supports) as ASME Code Section III are designed in accordance with ASME Code Section III requirements.	Inspection of ASME Code Design Reports (NCA-3550) and required documents will be conducted.	ASME Code Design Report(s) (NCA-3550) (certified, when required by ASME Code) exist and conclude that the design of the RPV and its components identified in Table 2.1.1-1 (shroud, shroud support, top guide, core plate, control rod guide tubes and fuel supports) as ASME Code Section III complies with the requirements of the ASME Code, Section III, including those stresses applicable to loads related to fatigue (including environmental effects), thermal expansion, seismic, and combined.

Table 2.1.1-3

ITAAC For The Reactor Pressure Vessel and Internals

Design Commitment	Inspections, Tests, Analyses	Acceptance Criteria
3.a2. The RPV and its components identified in Table 2.1.1-1 (shroud, shroud support, top guide, core plate, control rod guide tubes and fuel supports) as ASME Code Section III shall be reconciled with the design requirements.	A reconciliation analysis of the components using as-designed and as-built information and ASME Code Design Reports (NCA-3550) will be performed.	ASME Code Design Report(s) (certified, when required by ASME Code) exist and conclude that design reconciliation has been completed in accordance with the ASME Code for as-built reconciliation of the RPV and its components identified in Table 2.1.1-1 (shroud, shroud support, top guide, core plate, control rod guide tubes and fuel supports) as ASME Code Section III. The report documents the results of the reconciliation analysis.
3.a3. The RPV and its components identified in Table 2.1.1-1 (shroud, shroud support, top guide, core plate, control rod guide tubes and fuel supports) as ASME Code Section III are fabricated, installed, and inspected in accordance with ASME Code Section III requirements.	Inspection of the RPV and its components identified in Table 2.1-1 as ASME Code Section III will be conducted.	ASME Code Data Report(s) (including ~~N-5~~N-1/N-1A Data reports, where applicable) (certified, when required by ASME Code) and inspection reports exist and conclude that the RPV and its components identified in Table 2.1.1-1 (shroud, shroud support, top guide, core plate, control rod guide tubes and fuel supports) as ASME Code Section III are fabricated, installed, and inspected in accordance with ASME Code Section III requirements.

Table 2.1.1-3

ITAAC For The Reactor Pressure Vessel and Internals

Design Commitment	Inspections, Tests, Analyses	Acceptance Criteria
4. Pressure boundary welds in the RPV meet ASME Code Section III non-destructive examination requirements.	Inspection of as-built pressure boundary welds in the RPV will be performed in accordance with the ASME Code Section III.	ASME Code Report(s) exist and conclude that the ASME Code Section III requirements are met for non-destructive examination of pressure boundary welds in the RPV.
5. The RPV retains its pressure boundary integrity at its design pressure.	A hydrostatic test will be conducted on the RPV as it is required to be hydrostatically tested by the ASME Code.	ASME Code Report(s) exist and conclude that the results of the hydrostatic test of the RPV comply with the requirements of the ASME Code Section III.
6. The equipment identified in Table 2.1.1-1 as Seismic Category I can withstand Seismic Category I loads without loss of safety function.	i. Inspection will be performed to verify that the Seismic Category I equipment identified in Table 2.1.1-1 is located in a Seismic Category I structure. ii. Type tests, analyses, or a combination of type tests and analyses of equipment identified in Table 2.1.1-1 as Seismic Category I will be performed using analytical assumptions, or will be performed under conditions which bound the Seismic Category I design requirements.	i. The equipment identified in Table 2.1.1-1 as Seismic Category I is located in a Seismic Category I structure. ii. The equipment identifed in Table 2.1.1-1 as Seismic Category I can withstand Seismic Category I loads without loss of safety function.

Table 2.1.1-3

ITAAC For The Reactor Pressure Vessel and Internals

Design Commitment	Inspections, Tests, Analyses	Acceptance Criteria
	iii. Inspection and analyses will be performed to verify that the as-built equipment identified in Table 2.1.1-1 as Seismic Category I, including anchorage, is bounded by the tested or analyzed conditions.	iii. The as-built equipment, identified in Table 2.1.1-1 as Seismic Category I, including anchorage, can withstand Seismic Category I loads without loss of safety function..
7. RPV surveillance specimens are provided from the forging material of the beltline region and the weld and heat affected zone of a weld typical of those adjacent to the beltline region. Brackets welded to the vessel cladding at the location of the calculated peak fluence are provided to hold the removable specimen holders and a neutron dosimeter in place.	Inspections of the as-built RPV and Internals will be conducted for implementation of the RPV surveillance specimens, neutron dosimeter, and brackets. An analysis is performed to determine the location of the peak fluence.	The RPV surveillance specimens and neutron dosimeters are provided and brackets are installed at the location(s) of calculated peak fluence determined by an analysis of the as-built configuration.
8. The RPV internal structures listed in Table 2.1.1-1 (chimney and partitions, chimney head and steam separators assembly, and steam dryer assembly) must meet the limited provisions of ASME Code Section III regarding certification that these components maintain structural integrity so as not to adversely affect RPV core support structure.	Inspections will be conducted of the as-built internal structures as documented in the ASME Code design reports.	The RPV internal structures listed in Table 2.1.1-1 (chimney and partitions, chimney head and steam separators assembly, and steam dryer assembly) meet the limited provisions of ASME Code Section III, NG-1122 (c), regarding certification that these components maintain structural integrity so as not to adversely affect RPV core support structure.

Table 2.1.1-3

ITAAC For The Reactor Pressure Vessel and Internals

Design Commitment	Inspections, Tests, Analyses	Acceptance Criteria
9. The initial fuel to be loaded into the core will withstand flow-induced vibration and maintain fuel cladding integrity during operation.	Flow-Induced Vibration (FIV) testing will be performed on the fuel bundle design that will be loaded into the ESBWR initial core and on the reference fuel design in reactor use during the time of the tests. Bundle and rod responses at various elevations between the ESBWR design and the fuel design with the most similar design features will be compared.	The initial fuel to be loaded into the core will withstand flow-induced vibration and maintain fuel cladding integrity during operation.
10. The fuel bundles and control rods intended for initial core load have been fabricated in accordance with the approved fuel and control rod design.	An inspection of the fuel bundles and control rods will be performed.	The fuel bundles and control rods intended for the initial core load have been inspected upon receipt to verify that they have been fabricated in accordance with the approved fuel and control rod design.
11. The reactor internals arrangement conforms to the fuel bundle, instrumentation, neutron sources, and control rod locations shown on Figure 2.1.1-2.	An inspection of the as-built system will be performed.	The as-built reactor system fuel bundle, control rod, instrumentation, and neutron source locations conform to the locations shown on Figure 2.1.1-2.
12. The number and locations of pressure sensors installed on the steam dryer for startup testing ensure accurate pressure predictions at critical locations.	An analysis of the number and locations of pressure sensors installed on the steam dryer for startup testing will be performed.	The number and locations of pressure sensors installed on the steam dryer for startup testing ensure accurate pressure predictions at critical locations.

Table 2.1.1-3

ITAAC For The Reactor Pressure Vessel and Internals

Design Commitment	Inspections, Tests, Analyses	Acceptance Criteria
13. The number and locations of strain gages and accelerometers installed on the steam dryer for startup testing are capable of monitoring the most highly stressed components, considering accessibility and avoiding discontinuities in the components.	An analysis of the number and locations of strain gages and accelerometers installed on the steam dryer for startup testing will be performed.	The number and locations of strain gages and accelerometers installed on the steam dryer for startup testing are capable of monitoring the most highly stressed components, considering accessibility and avoiding discontinuities in the components.
14. The number and locations of accelerometers installed on the steam dryer for startup testing are capable of identifying potential rocking and of measuring the accelerations resulting from support and vessel movements.	An analysis of the number and locations of accelerometers installed on the steam dryer for startup testing will be performed.	The number and locations of accelerometers installed on the steam dryer for startup testing are capable of identifying potential rocking of and measuring the accelerations resulting from support and vessel movements.

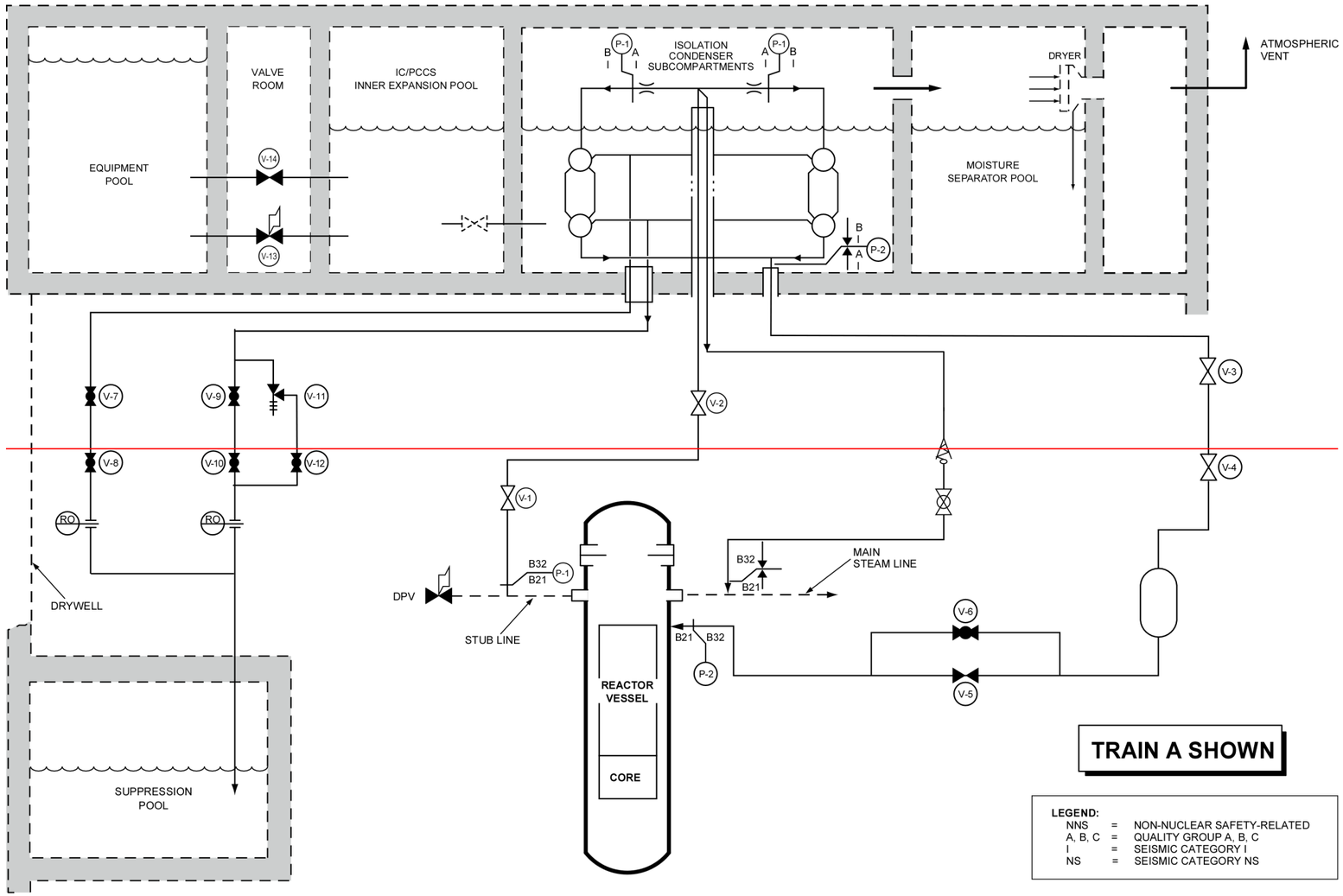
EQUIPMENT POOL
VALVE ROOM
IC/PCCS INNER EXPANSION POOL
ISOLATION CONDENSER SUBCOMPARTMENTS
DRYER
ATMOSPHERIC VENT
MOISTURE SEPARATOR POOL
V-14
V-13
P-1
P-2
V-7
V-8
V-9
V-10
V-11
V-12
V-1
V-2
V-3
V-4
V-5
V-6
RO
DRYWELL
SUPPRESSION POOL
DPV
STUB LINE
B32
B21
MAIN STEAM LINE
REACTOR VESSEL
CORE
TRAIN A SHOWN
LEGEND:
NNS = NON-NUCLEAR SAFETY-RELATED
A, B, C = QUALITY GROUP A, B, C
I = SEISMIC CATEGORY I
NS = SEISMIC CATEGORY NS

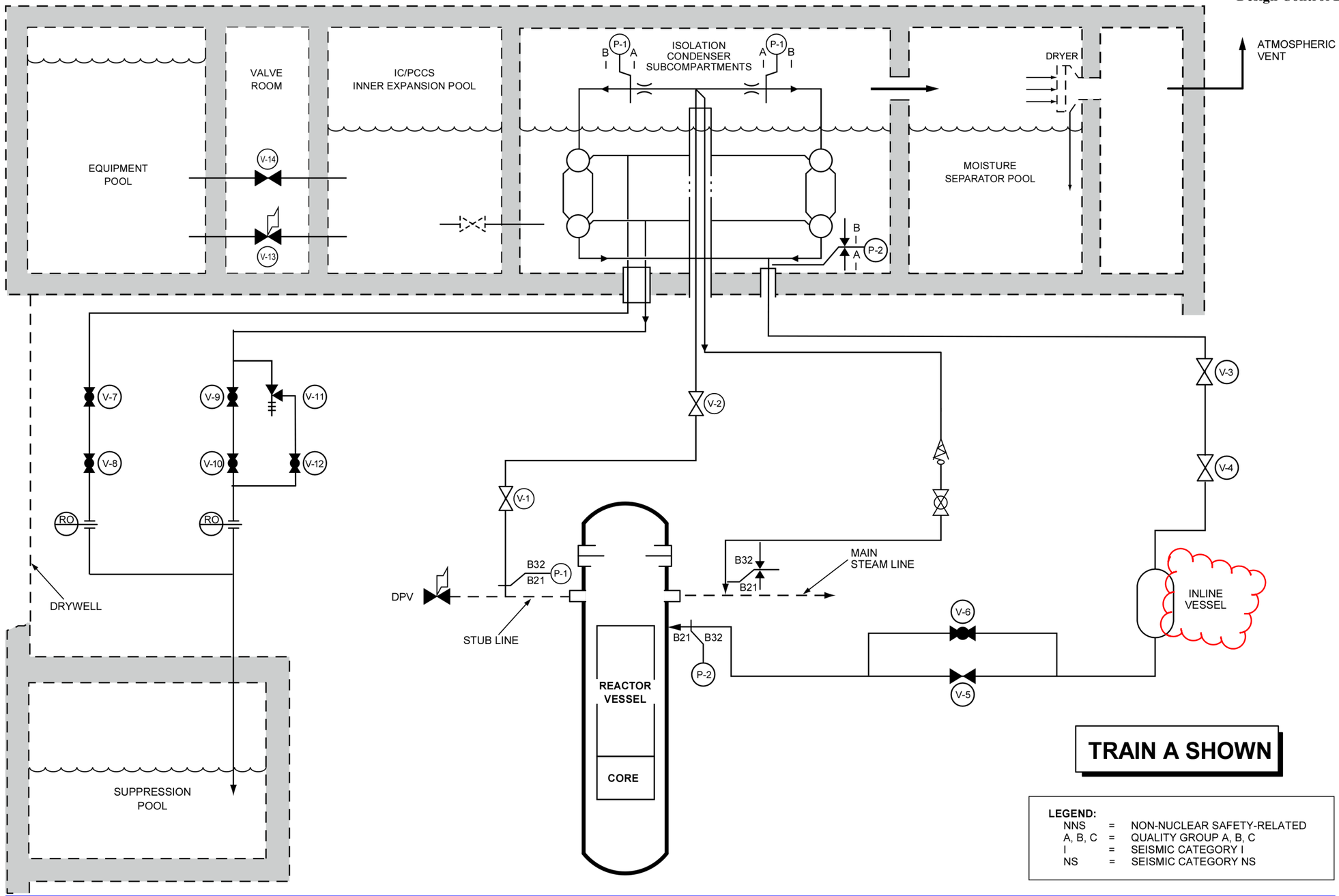

Figure 2.4.1-1. Isolation Condenser System Schematic

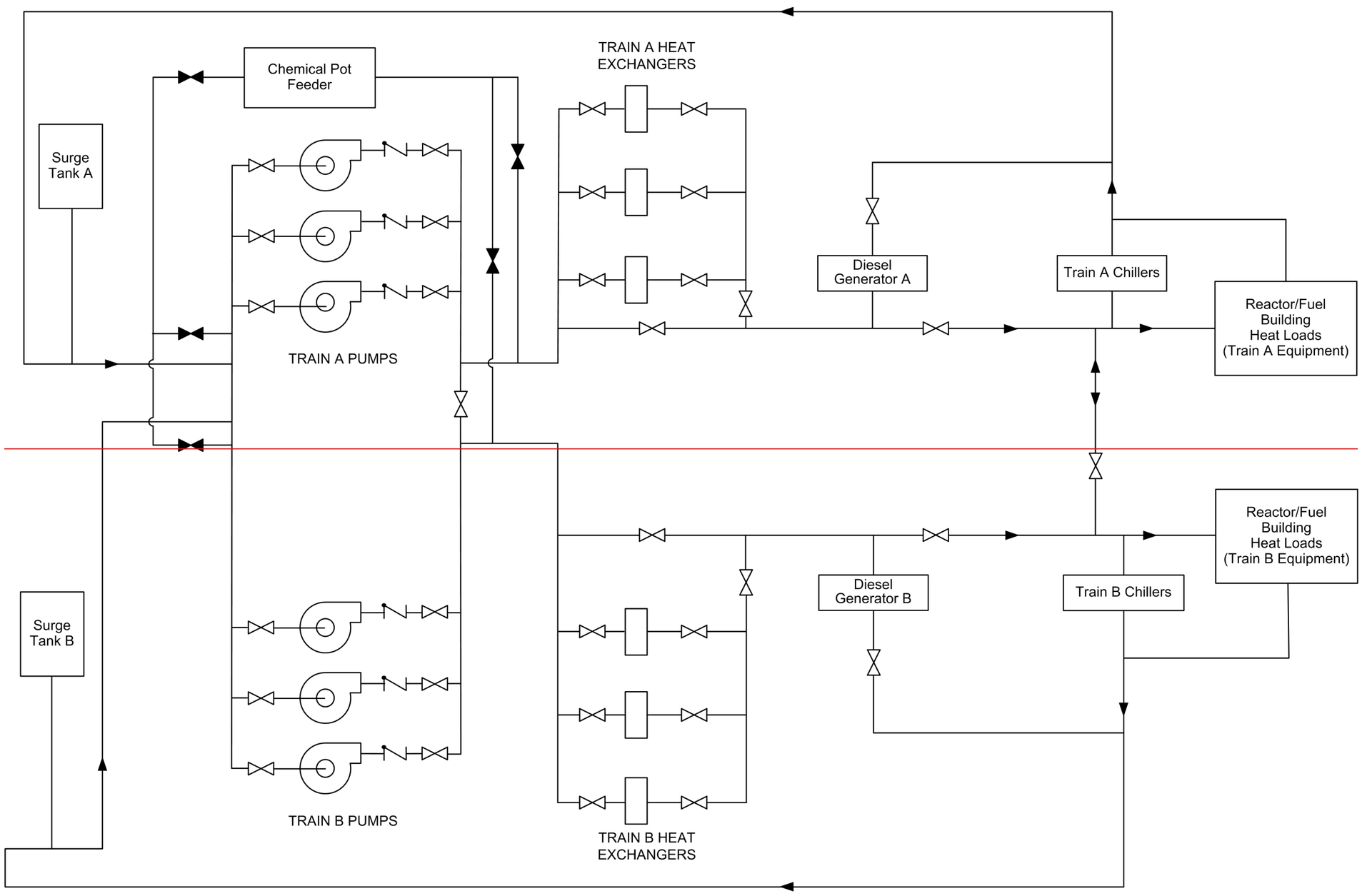
Chemical Pot Feeder
TRAIN A HEAT EXCHANGERS
Surge Tank A
Diesel Generator A
Train A Chillers
Reactor/Fuel Building Heat Loads (Train A Equipment)
TRAIN A PUMPS
Reactor/Fuel Building Heat Loads (Train B Equipment)
Diesel Generator B
Train B Chillers
Surge Tank B
TRAIN B PUMPS
TRAIN B HEAT EXCHANGERS

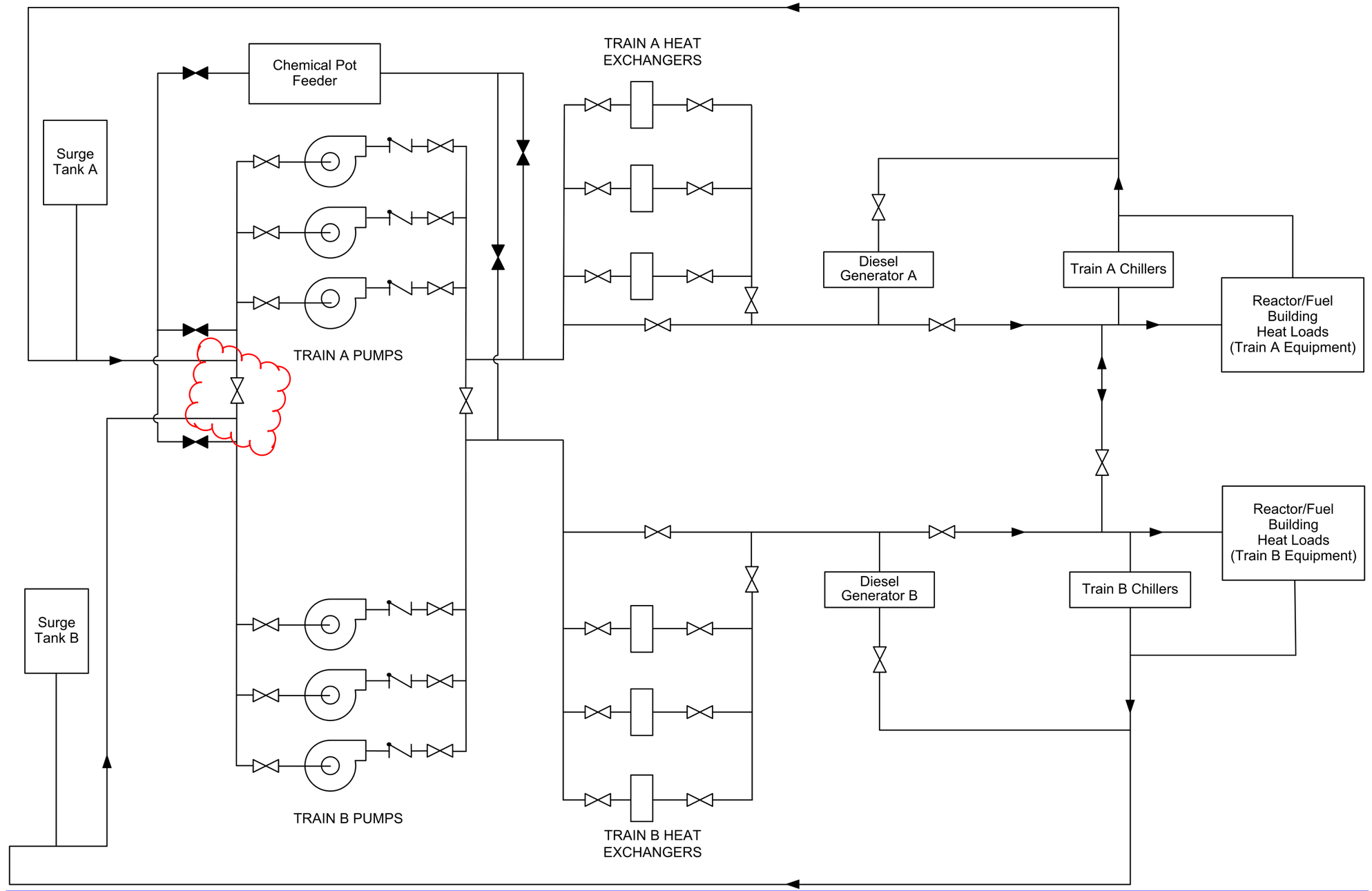

Figure 2.12.3-1. Reactor Component Cooling Water System Functional Arrangement

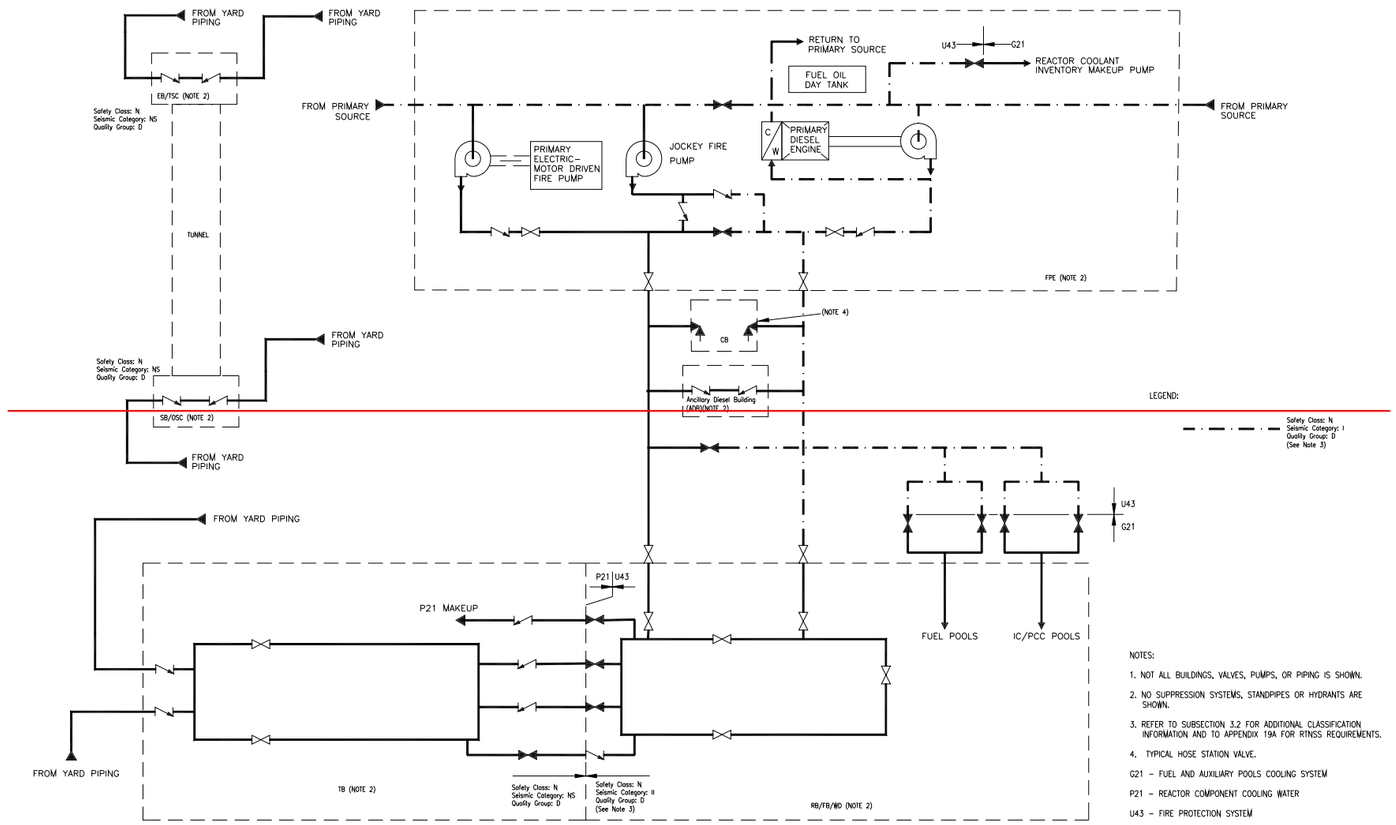

NOTES:

1. NOT ALL BUILDINGS, VALVES, PUMPS, OR PIPING IS SHOWN.
2. NO SUPPRESSION SYSTEMS, STANDPIPES OR HYDRANTS ARE SHOWN.
3. REFER TO SUBSECTION 3.2 FOR ADDITIONAL CLASSIFICATION INFORMATION AND TO APPENDIX 19A FOR RTNSS REQUIREMENTS.
4. TYPICAL HOSE STATION VALVE.

G21 – FUEL AND AUXILIARY POOLS COOLING SYSTEM

P21 – REACTOR COMPONENT COOLING WATER

U43 – FIRE PROTECTION SYSTEM

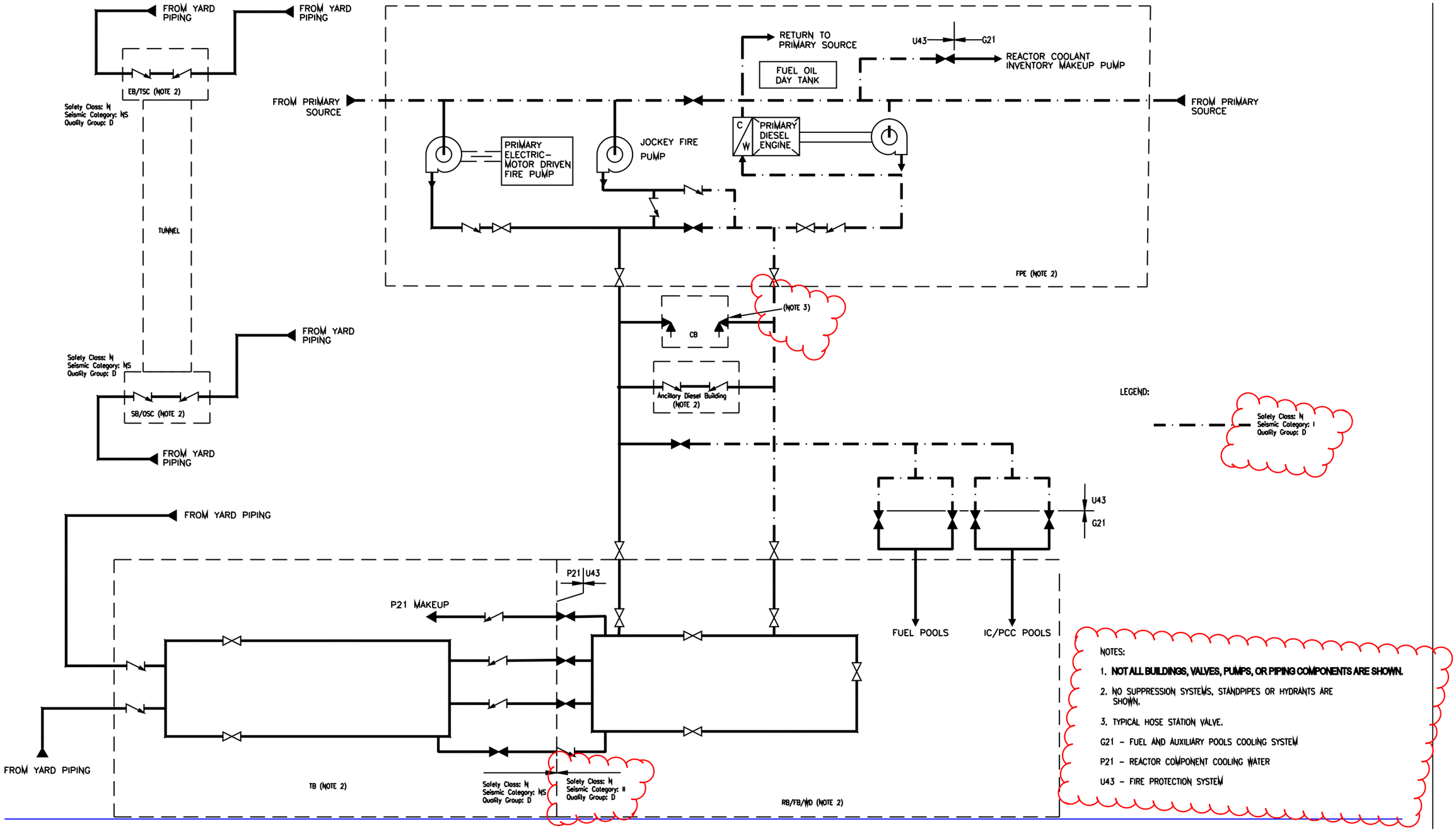

Figure 2.16.3-1. Fire Protection System