Xcel Energy®

October 27, 2009

L-PI-09-114
10 CFR 50.90

U S Nuclear Regulatory Commission
ATTN: Document Control Desk
Washington, DC 20555-0001

Prairie Island Nuclear Generating Plant Units 1 and 2
Dockets 50-282 and 50-306
License Nos. DPR-42 and DPR-60

License Amendment Request (LAR) to Adopt the Alternative Source Term Methodology

References:

1. US NRC Public Meeting Summary, "August 26, 2009 Summary of Pre-Submittal Meeting to Discuss Proposed Alternate Source Term License Amendment with Northern States Power Co. for Prairie Island, Units 1 & 2," dated October 2, 2009 (ADAMS Accession No. ML092670483)
2. Nuclear Management Company, LLC (NMC) Letter to US Nuclear Regulatory Commission (NRC), "Selective Scope Implementation of Alternate Source Term for Fuel Handling Accident Applied to Containment Technical Specifications," dated January 20, 2004 (ADAMS Accession No. ML040270067)
3. Xcel Energy Letter to US NRC, "RADTRAD and ARCON96 Input and Output Files in Support of License Amendment Request (LAR) to Adopt the Alternative Source Term Methodology," dated October 27, 2009

Pursuant to 10 CFR 50.90, the Northern States Power Company, a Minnesota corporation (NSPM), doing business as Xcel Energy, hereby requests an amendment to the Technical Specifications (TS) for Prairie Island Nuclear Generating Plant (PINGP).

NSPM requests Nuclear Regulatory Commission (NRC) review and approval of proposed revisions to the licensing basis of the PINGP that supports a full scope application of an Alternative Source Term (AST) methodology. Proposed TS changes, which are supported by the AST Design Basis Accident (DBA) radiological consequence analyses, are included in this application for a license amendment. In addition, the proposed amendment incorporates TSTF-490, "Deletion of E-Bar Definition and Revision to RCS Specific Activity Tech Spec," Revision 0.

1717 Wakonade Drive East • Welch, Minnesota 55089-9642
Telephone: 651.388.1121

A001
NRR

The enclosure to this letter contains the licensee's evaluation of the proposed changes.

On August 26, 2009, Xcel Energy met with the NRC Staff to discuss the AST LAR for the PINGP. Reference 1 provides a summary of this pre-submittal meeting.

In Reference 2, a CD was provided to the NRC which contained the meteorological data for the PINGP, in the ARCON96 format, to facilitate NRC review of that submittal. This same set of meteorological data is used in the Control Room and Technical Support Center χ/Q assessment presented in this AST LAR. Therefore, the PINGP meteorological data is not being resubmitted.

In Reference 3, the RADTRAD and ARCON96 input and output files were submitted to the NRC to facilitate the NRC staff review of this AST LAR.

NSPM requests approval of this LAR within one calendar year of the submittal date. Upon NRC approval, NSPM requests 120 days to implement the associated changes. In accordance with 10 CFR 50.91, NSPM is notifying the State of Minnesota of the LAR by transmitting a copy of this letter and enclosure to the designated State Official.

If there are any questions or if additional information is needed, please contact Ms. Amy Hazelhoff, at 269-370-7445.

Summary of Commitments

This submittal does not contain any new commitments and no revisions to existing commitments.

I declare under penalty of perjury that the foregoing is true and correct.
Executed on October 27, 2009.

Mark Schimmel
Site Vice President, Prairie Island Nuclear Generating Plant Units 1 and 2
Northern States Power Company - Minnesota

Enclosure:
Evaluation of Proposed Changes

cc: Administrator, Region III, USNRC
Project Manager, Prairie Island, USNRC
Resident Inspector, Prairie Island, USNRC
State of Minnesota

ENCLOSURE

Evaluation of the Proposed Changes

License Amendment Request (LAR) to Adopt the Alternative Source Term Methodology

1.0 SUMMARY DESCRIPTION
2.0 DETAILED DESCRIPTION
- 2.1 PROPOSED CHANGES
- 2.2 BACKGROUND

3.0 TECHNICAL EVALUATION
- 3.1 METEOROLOGY AND ATMOSPERIC DISPERSION
- 3.2 ANALYTICAL MODELS
- 3.3 LOSS OF COOLANT ACCIDENT
- 3.4 FUEL HANDLING ACCIDENT
- 3.5 HEAVY LOAD DROP ACCIDENT
- 3.6 MAIN STEAM LINE BREAK
- 3.7 STEAM GENERATOR TUBE RUPTURE
- 3.8 CONTROL ROD EJECTION
- 3.9 LOCKED ROTOR
- 3.10 NUREG-0737 EVALUATIONS
- 3.11 CONCLUSIONS
- 3.12 TS DISCUSSION

4.0 REGULATORY SAFETY ANALYSIS
- 4.1 APPLICABLE REGULATORY REQUIREMENTS/CRITERIA
- 4.2 PRECEDENT
- 4.3 SIGNIFICANT HAZARDS CONSIDERATION
- 4.4 CONCLUSIONS

5.0 ENVIRONMENTAL CONSIDERATION
6.0 REFERENCES

ATTACHMENTS:

1. Technical Specification Pages (Markup)
2. Bases Pages (Markup) (For information only)
3. Technical Specification Pages (Retyped)
4. Regulatory Guide 1.183 Conformance Tables
5. Comparison to NRC Regulatory Information Summary 2006-04
6. Loss of Coolant Accident Analysis
7. Fuel Handling Accident Analysis
8. Heavy Load Drop Accident Analysis
9. Main Steam Line Break Analysis
10. Steam Generator Tube Rupture Analysis
11. Control Rod Ejection Analysis
12. Locked Rotor Analysis

1.0 SUMMARY DESCRIPTION

This LAR is a request to amend Operating Licenses DPR-42 and DPR-60 for Prairie Island Nuclear Generating Plant (PINGP) Units 1 and 2.

Northern States Power Company, a Minnesota corporation (NSPM) requests Nuclear Regulatory Commission (NRC) review and approval of proposed revisions to the licensing basis of the PINGP that supports a full scope application of an Alternative Source Term (AST) methodology. Proposed Technical Specification (TS) changes, which are supported by the AST Design Basis Accident (DBA) radiological consequence analyses, are included in this application for a license amendment. In addition, the proposed amendment incorporates TSTF-490, "Deletion of E-Bar Definition and Revision to RCS Specific Activity Tech Spec," Revision 0.

2.0 DETAILED DESCRIPTION

2.1 Proposed Changes

Brief descriptions of the associated proposed TS changes are provided below along with discussions of the justification for each change. The specific wording changes to the TS are provided in Attachments 1 and 3 to this enclosure.

TS 1.1, "Definitions"

PINGP proposes to implement the approved Industry improved Standard Technical Specification traveler, TSTF-490.

This LAR proposes to revise the definition for Dose Equivalent I-131 (DEI). This TS provides a definition for DEI, which currently references Table III of TID-14844, AEC, 1962, "Calculation of Distance Factors for Power and Test Reactor Sites." This TS will be revised to reference Table 2.1 of Federal Guidance Report 11, "Limiting Values of Radionuclide Intake and Air Concentration and Dose Conversion Factors for Inhalation, Submersion and Ingestion." This change is acceptable because with the use of the Alternative Source Term methodology, thyroid and whole body doses are not reported. Under AST, the doses are reported as Total Effective Dose Equivalent (TEDE). The TEDE dose is a summation of the Committed Effective Dose Equivalent (CEDE) and the whole body dose. Therefore, the DEI definition should be based on the CEDE dose conversion factors instead of thyroid dose conversion factors.

This LAR proposes to replace the term E-Bar, "Average Disintegration Energy," with the term Dose Equivalent Xe-133. This change is being made to implement a limiting condition of operation (LCO) that is more attuned to the whole body radiological consequences analyses which are sensitive to the noble gas activity

in the primary coolant but not to other, non-gaseous activity currently captured in the E-Bar definition.

TS 3.3.7, "Spent Fuel Pool Special Ventilation System Actuation Instrumentation"

This TS and associated Bases will be removed from Technical Specifications. This TS provides requirements for instrumentation associated with the Spent Fuel Pool Special Ventilation System (SFPSVS). This change is acceptable because the SFPSVS is no longer credited for filtration or isolation. The SFPSVS is not required in order to meet dose consequence limits. Therefore, the actuation instrumentation for the SFPSVS is not required to meet dose consequence limits.

TS 3.4.17, "RCS Specific Activity"

This LAR proposes to revise TS 3.4.17. NSPM proposes to implement the approved Industry improved Standard Technical Specification traveler, TSTF-490. This TS provides requirements for Reactor Coolant System (RCS) specific activity. The current TS limits on reactor coolant gross specific activity are being replaced with limits on reactor coolant noble gas activity. The noble gas activity would be based on Dose Equivalent Xe-133 and would take into account the noble gas activity in the reactor coolant. TS Figure 3.4.17-1, which reflects reactor coolant iodine concentration as a function of reactor power, is deleted and replaced with a single value that is applicable to any power level. These changes are consistent with TSTF-490.

TS 3.7.12, "Auxiliary Building Special Ventilation System"

This LAR proposes to revise TS SR 3.7.12.3. This surveillance requirement verifies that each train of the Auxiliary Building Special Ventilation System (ABSVS) can produce a negative pressure within a certain duration after initiation. The current duration is 6 minutes. The LAR proposes to revise this duration to 20 minutes. This change is acceptable because with the AST methodology and the associated fission product release times for the loss of coolant accident (LOCA) per RG 1.183, the new analysis is able to show dose consequence values less than the limits with a start time of 20 minutes for the ABSVS.

TS 3.7.13, "Spent Fuel Pool Special Ventilation System"

This TS and associated Bases will be removed from Technical Specifications. This TS provides requirements for the Spent Fuel Pool Special Ventilation System (SFPSVS). This change is acceptable because the SFPSVS is no longer credited for filtration or isolation. The SFPSVS is not required in order to meet dose consequence limits.

TS 3.9.4, "Containment Penetrations"

This TS and associated Bases are being replaced with a TS and Bases on Decay Time, which requires that recently irradiated fuel (<50 hours) cannot be handled. This change is acceptable because the fuel handling accident (FHA) analysis does not credit containment closure when handling fuel 50 hours after shutdown. Therefore, the containment penetrations TS is no longer needed.

TS 5.5.9, "Ventilation Filter Testing Program"

This LAR proposes to revise TS 5.5.9 by deleting the Spent Fuel Pool Special and Inservice Purge Ventilation System (SFPSIPVS) from the Ventilation Filter Testing program. This is acceptable because the FHA analysis does not credit the SFPSIPVS for filtration or isolation of the respective area. Therefore, the SFPSIPVS is not required in order to meet dose consequence limits, so testing is no longer necessary for the SFPSIPVS filters.

TS 5.5.9b and TS 5.5.9d

This LAR proposes to revise TS 5.5.9b and TS 5.5.9d to reflect that the Shield Building Ventilation System (SBVS) is no longer applicable to charcoal adsorber testing. This is acceptable because the LOCA analysis only credits the SBVS HEPA filter and takes no credit for the charcoal adsorber. Therefore, because the SBVS charcoal filter is not credited in the dose consequence analysis, testing of the charcoal adsorber is not required for the SBVS.

TS 5.5.9c

This LAR proposes to revise TS 5.5.9c to delete the methyl iodide penetration values for the SBVS and SFPSIPVS and to revise the methyl iodide penetration value for the ABSVS. Deletion of the methyl iodide penetration values for the SFPIPVS is acceptable because the SFPSIPVS is not required in order to meet dose consequence limits, so testing of the charcoal adsorbers for the SFPSIPVS is no longer necessary. Deletion of the methyl iodide penetration values for the SBVS is acceptable because the SBVS charcoal filter is not credited in the dose consequence analysis, so testing of the charcoal adsorber is not required. The revision of the methyl iodide penetration value for ABSVS is necessary in order to achieve acceptable dose consequences in the control room for the LOCA analysis. The ABSVS charcoal filter efficiency is increased from 70% to 80%, which will increase the additional 10% iodine loading on the charcoal and proportionately increase the filter shine dose. Since the ABSVS charcoal filter shine dose is calculated using 100% charcoal filter efficiency, it bounds the 10% dose increase due to increased ABSVS charcoal filter efficiency. The 80% credited efficiency corresponds to a penetration testing value of 10%, which is

consistent with Generic Letter 99-02, "Laboratory Testing of Nuclear-Grade Activated Charcoal."

TS 5.5.9e

This LAR proposes to revise TS 5.5.9e to delete the test face velocity values for the SBVS and SFPSIPVS. This is acceptable because the SFPSIPVS is not required in order to meet dose consequence limits, so testing of the charcoal adsorbers for the SFPSIPVS is no longer necessary. The SBVS charcoal filter is not credited in the dose consequence analysis, so testing of the charcoal adsorber is not required.

TS 5.5.14, "Containment Leakage Rate Testing Program"

This LAR proposes to revise values for the primary containment leakage rate. This TS provides the containment leakage rate testing program. TS 5.5.14c provides values for primary containment leakage. In order to achieve acceptable dose consequences in the control room and technical support center for the LOCA, it was necessary to reduce the assumed containment leakage rates. This is acceptable because this change provides consistency with the dose consequence analysis and assures that acceptable dose consequences are achieved in the control and technical support center in the event of a LOCA.

Proposed TS 5.5.16, "Control Room Habitability Program"

This LAR proposes to revise the proposed TS 5.5.16, to delete references to Technical Information Document (TID) dose consequence of 5 rem whole body. This TS was proposed by letter dated June 24, 2009 (ADAMS Accession #ML091760988). This TS included references to both AST and TID dose consequence because at the time, PINGP was both a TID and AST plant (FHA). This is acceptable because the reference to the TID methodology will no longer be applicable to PINGP.

Although Bases changes are not a part of this LAR, Attachment 2 to this enclosure includes marked up Bases pages for information. The TS Bases changes are directly related to the proposed TS changes.

In summary these changes are acceptable because they assure the plant analyses and operations meet the applicable regulatory requirements.

2.2 Background

The NRC methods for calculating accident doses were developed to be consistent with TID -14844, "Calculation of Distance Factors for Power and Test Reactors." Since the publication of TID-14844, significant advances have been made in understanding the timing, magnitude, and chemical form of fission product releases from severe nuclear

power plant accidents. In 1999, the NRC promulgated a new regulation, 10 CFR 50.67 based on these advances. Specifically the NRC stated in the Statements of Consideration for 10 CFR 50.67, Published December 23, 1999, 64 FR 71990:

> The Nuclear Regulatory Commission (NRC) is amending its regulations to allow holders of operating licenses for nuclear power plants to voluntarily replace the traditional source term used in design basis accident analyses with alternative source terms. This action will allow interested licensees to pursue cost beneficial licensing actions to reduce unnecessary regulatory burdens without compromising the margin of safety of the facility.

NRC Generic Letter (GL) 2003-01, "Control Room Habitability," (Reference 1) required licensees, in part, to confirm that the most limiting unfiltered in-leakage into the control room envelope (CRE) is no more than the value assumed in the current design basis radiological analyses. The current dose analyses for the PINGP assume 165 cfm unfiltered in-leakage plus an additional 10 cfm for ingress and egress into the CRE. The control room is common to both Units 1 and 2. The American Society for Testing and Materials (ASTM) E741 tracer gas test was performed in 1998 and repeated in 2004. The highest measured unfiltered in-leakage was 165 cfm (including uncertainty) consistent with the current licensing basis assumption of 165 cfm. The test results from both tests demonstrated a leakage rate not greater than the unfiltered in-leakage assumed in the current licensing basis accident analyses as well as for the AST analyses performed for this request. The revised radiological dose to the control room operator allows for a revised unfiltered air in-leakage assumption that provides a conservative margin over that determined by air in-leakage testing. The revised radiological dose analyses are based on an assumption of 240 cfm unfiltered in-leakage, not including inleakage due to ingress and egress.

3.0 TECHNICAL ANALYSIS

Technical Background

PINGP is a two unit plant located on the right bank of the Mississippi River, approximately 6 miles northwest of the city of Red Wing, Minnesota. The facility is owned and operated by NSPM. Each unit at PINGP employs a two-loop pressurized water reactor designed and supplied by Westinghouse Electric Corporation. The initial PINGP application for a Construction Permit and Operating License was submitted to the Atomic Energy Commission (AEC) in April 1967. The Final Safety Analysis Report (FSAR) was submitted for application of an Operating License in January 1971. Unit 1 began commercial operation in December 1973, and Unit 2 began commercial operation in December 1974.

The PINGP was designed and constructed to comply with NSPM's understanding of the intent of the AEC General Design Criteria (GDC) for Nuclear Power Plant Construction Permits, as proposed on July 10, 1967. PINGP was not licensed to NUREG-0800, "Standard Review Plan (SRP)."

The current PINGP licensing basis for radiological consequence analysis of accidents discussed in Chapter 14 of the updated safety analyses report (USAR) is based on methodologies and assumptions derived from Technical Information Document (TID)-14844, "Calculation of Distance Factors For Power and Test Reactor Sites," (Reference 2) with the exception of the Fuel Handling Accidents. License Amendments 166 (Unit 1) and 156 (Unit 2) authorized selective implementation of the AST for Fuel Handling Accidents (FHA) at PINGP. The FHA is also included in this submittal as changes are being made to the radiological dose analysis.

Overview

The proposed AST methodology is consistent with the guidance in Standard Review Plan 15.0.1, "Radiological Consequence Analyses Using Alternative Source Terms," (Reference 3) and Regulatory Guide (RG) 1.183, "Alternative Radiological Source Terms for Evaluating Design Basis Accidents at Nuclear Power Reactors," (Reference 4) except where alternate methods for complying with the specified portions of the NRC's regulations have been used. Documentation of conformance to RG 1.183 and the discussion of any alternate methods are presented in Attachment 4. In addition, Regulatory Issue Summary 2006-04, "Experience with Implementation of Alternative Source Terms," was reviewed during the development of this license amendment request and a RIS 2006-04 resolution matrix is provided in Attachment 5.

In support of a full-scope implementation of the AST methodology, Xcel Energy, supported by NUCORE Consulting Services, Inc., performed radiological consequence analyses for the following DBAs that result in control room (CR) and offsite exposure as specified in RG 1.183 (Reference 4).

- Loss of Coolant Accident (LOCA)
- Fuel Handling Accident (FHA)
- Heavy Load Drop (HLD)
- Main Steam Line Break (MSLB)
- Steam Generator Tube Rupture (SGTR)
- Control Rod Ejection Accident (CREA)
- Locked Rotor Accident (LRA)

Proposed changes to the current licensing basis for the PINGP justified by the AST analyses include the following.

- The use of meteorological data to calculate onsite atmospheric dispersion factors.
- No credit for the containment spray system for the reduction of iodine in the containment atmosphere.
- No credit for the Shield Building Ventilation System Charcoal Filter.
- Increase in assumed Auxiliary Building Special Ventilation Charcoal Filter Efficiency
- No credit for the Spent Fuel Pool Special Ventilation System HEPA and Charcoal Filter.
- Reduced allowable containment leak rates.
- Increased control room unfiltered in-leakage assumption.

Systems Affected By the Proposed Changes

The following systems are affected by this proposed amendment:

- The Reactor Containment Vessel serves to contain fission product radioactivity that may be released from the reactor core following an accident, such that offsite radiation exposures are maintained within the applicable requirements. The Reactor Containment Vessel is a free standing steel vessel. The Reactor Containment Vessel is described in Section 5.2 of the USAR (Reference 5).

- The Shield Building completely encloses the Reactor Containment Building, the access openings, the equipment hatch and that portion of all penetrations that are associated with primary containment. The design of the Shield Building provides for (1) biological shielding, (2) controlled releases of the annulus atmosphere under accident conditions, and (3) environmental protection of the Containment Vessel. The Shield Building is described in Section 5.3 of the USAR.

- The Shield Building Ventilation System (SBVS) operates in the event of a loss of coolant accident to draw and maintain a negative pressure in the Shield Building. In addition, the system recirculates and filters the air prior to release. The system is shown on Figure 3.0-1. This system consists of two independent and

redundant filter trains, with the exception that some of the ducting is common to both trains (i.e., return header in the Shield Building and the Shield Building Vent Stack are common). Each train consists of a heater, a prefilter, a high efficiency particulate air (HEPA) filter, and an activated charcoal adsorber section for removal of gaseous activity (principally iodines). Two 100-percent-capacity exhaust and recirculation fans serve the redundant trains. Heaters, ductwork, dampers, and instrumentation also form part of the system. The heaters function to reduce the relative humidity of the air stream. When initiated the SBVS exhausts to draw a negative pressure in the Shield Building annulus area outside of the Reactor Containment vessel. After a pre-set negative pressure is established a recirculation damper opens to allow the system to recirculate a portion of the total air flow while exhausting to maintain a negative pressure. The SBVS returns the recirculation flow to a ring header near the bottom of the Shield Building annulus. The SBVS draws flow from near the top of the Reactor Containment Vessel. The configuration and orientation of the return air ring header relative to the SBVS intake points promotes mixing.

- The Auxiliary Building encloses a majority of the containment penetrations and the Emergency Core Cooling Systems (ECCS); these areas in the Auxiliary Building are referred to as the Auxiliary Building Special Ventilation Zone (ABSVZ). The ABSVZ is Category 1, safety related and is provided by the Auxiliary Building concrete structure, doors, and penetrations. The Auxiliary Building ventiliation system is described in Sections 10.3.2 and 10.3.4 of the USAR. As part of establishing the ABSVZ, several heating, ventilation and air conditioning (HVAC) dampers (Auxiliary Building Normal Ventilation System) automatically close. The Auxiliary Building Normal Ventilation System (ABNV) dampers that isolate the air make-up and exhaust are non-safety related. Although the dampers are not safety related, assurance that the dampers will perform the required functions is provided by the following.
    - The ABNV system has safety related electrical inputs from both trains of ABSVS. One train feeds a contact in series with the 42A coil and the other feeds a contact in series with the 42B coil. Both the Aux Bldg Normal Ventilation Make-Up Air Unit (MAU) supply damper and exhaust damper close on a loss of signal from redundant contacts (42A and 42B) from the Start of Aux Building Make up Unit.
    - Both the supply and exhaust dampers are held open by air. The dampers close, motive force is spring action, when the air supply is isolated to the damper. The air supply is isolated by a solenoid valve closing. The de-energized state of the solenoid valve is closed, with vent open. Therefore, electrical power is not required to cause any of the dampers to position close.
    - There are two dampers in the MAU supply. The outside damper has one solenoid valve and the inside damper has two redundant solenoid valves. This design provides for damper redundancy and also provides electrical redundancy for the damper on the outlet of the Normal Make-Up air unit. Thus, even if a damper should fail to close, a redundant damper is

provided in the supply line.

- The Aux Building Normal Ventilation Exhaust dampers are single dampers, however, each damper has two redundant electrical contacts from safety related circuits. The solenoid valves are fail safe design. The two contacts also go to the Exhaust fan. Each exhaust damper has a special dual air, dual spring fail safe design. Although only a single exhaust damper is provided, the dual air, dual spring fail safe design provides reasonable assurance that the exhaust dampers will close. Therefore, there is reasonable assurance that the supply and exhaust dampers will close when called upon to function.
- Proper functioning of the dampers is verified quarterly as part of established surveillance procedures to satisfy Technical Specifications. Applicable Technical Specification action statements are applied if a damper fails to properly actuate.

- The Auxiliary Building Special Ventilation System (ABSVS) operates in the event of a loss of coolant accident to draw and maintain a negative pressure in the ABSVZ. The ABSVS is shown on Figure 3.0-2. The ABSVS is capable of drawing and maintaining a negative pressure in the ABSVZ with up to ten square feet of total openings in the ABSVZ boundary. The ABSVS is common to both Unit 1 and Unit 2. This system consists of two independent and redundant filter trains. Each train consists of a heater, a prefilter, a high efficiency particulate air (HEPA) filter, and an activated charcoal adsorber section for removal of gaseous activity (principally iodines). Two 100-percent-capacity fans serve the redundant exhaust trains. Heaters, ductwork, dampers, and instrumentation also form part of the system. The heaters function to reduce the relative humidity of the air stream. When initiated the ABSVS exhausts to draw a negative pressure in the Auxiliary Building Special Ventilation Zone.

- The Control Room Special Ventilation System provides a protected environment from which the operators can control the units following an uncontrolled release of radioactivity by maintaining the control room as a habitable environment. The Control Room Special Ventilation System is safety related. During post accident conditions, the Control Room Envelope (CRE) is isolated from the outside environments and air in the control room is re-circulated. A portion of this re-circulated air is drawn through a HEPA filter and Charcoal adsorber. The Control Room Special Ventilation System satisfies the design requirement of limiting dose to the control room operators following the design basis accident in accordance with General Design Criterion 19 of 10 CFR 50, Appendix A. This system consists of two 100-percent-capacity redundant trains. The system isolates normal supply ventilation and initiates recirculation and cleanup ventilation of the control room envelope following receipt of a safety injection or high radiation signal. Each train of filtered recirculation consists of a prefilter, a high efficiency particulate air (HEPA) filter, an activated charcoal adsorber section for removal of gaseous activity (principally iodines), and a fan. Ductwork, dampers, and instrumentation also form part of the system. This system is

described in Section 10.3.3 of the USAR.

- The Spent Fuel Pool Enclosure is designed as a controlled-leakage structure. The Spent Fuel Pool Enclosure provides protection for the Spent Fuel Pools from environmental impacts such as tornado, seismic, and outside weather conditions.

- The Spent Fuel Pool Special Ventilation System filters airborne radioactive particulates from the area of the fuel pool following a fuel handling accident. This system consists of two independent and redundant filter trains. Each train consists of a heater, a prefilter, a high efficiency particulate air (HEPA) filter, and an activated charcoal adsorber section for removal of gaseous activity (principally iodines). Two 100-percent-capacity fans serve the redundant exhaust trains. Heaters, ductwork, dampers, and instrumentation also form part of the system. The heaters are provided to reduce the relative humidity of the air stream. The system initiates filtered exhaust ventilation from the Spent Fuel Pool Enclosure following receipt of a high radiation signal. This system is described in Section 10.3.7 of the USAR.

- The Engineered Safety Features (ESF) AC and DC Electrical Power Systems are designed with redundancy and independence of onsite power sources, distribution systems, and controls in order to provide a reliable supply of electrical power to the ESF electrical loads necessary to achieve safe plant shutdown, or to mitigate the consequences of postulated accidents. The ESF AC and DC Electrical Power Systems are described in Section 8.3 of the USAR.

Operator Actions

No new operator actions are credited as part of the AST analyses. The more significant operator actions that are credited in the AST analyses are:

- The analysis for a Steam Generator Tube Rupture assumes cooldown and depressurizing the RCS within the initial 30 minutes to stop the Reactor Coolant System flow through the ruptured Steam Generator tube. The analysis is based on an assumed time of 30 minutes after the initiation of the event. Steady state flow is assumed for the entire 30 minute time frame, which is very conservative. As described in Section 3.7 of this LAR, the 30 minute time frame does not prescribe that operator actions be completed in this time period. The 30 minute time frame is consistent with the current licensing basis as described in the USAR. Therefore, this is not considered to be a change.

- For secondary side events (Main Steam Line Break, Control Rod Ejection and Locked Rotor), plant cooldown to initiation of phase II cooling (RHR System) is credited to occur at 45.5 hours after event initiation. The 45.5 hour time period is based on a conservative review of plant operating procedures in response to the event. The time frame currently used in the MSLB analysis is eight (8) hours. Therefore, the AST analyses is more conservative than the current licensing basis. Additionally, for the Main Steam Line Break, it is assumed that it takes an

additional 29.5 hours to cooldown to less than 212°F to stop steam flow from the faulted Steam Generator. The 29.5 hour time period is based on a conservative review of plant operating procedures in response to the event.

- Environmental Qualification of Electrical Equipment
  For the environmental qualification of electrical equipment, there are several potential aspects of the environmental conditions that a component could be exposed to that need to be considered. These include temperature, pressure, liquid exposure (submergence, spray conditions), and radiation.
  1. No components are being added to the environmental qualification (EQ) program as a result of this LAR.
  2. No changes are being made that affect the temperature or pressure in containment or in any other areas in the plant. Systems credited for heat removal or ambient temperature or pressure control are not being changed.
  3. As discussed later, the containment spray system is not credited analytically for the removal of airborne iodine from the containment. However, no changes are being made that affect system operation or the system ability to control the containment pressure and temperature in the similar manner as in the current licensing basis (CLB). Therefore, the chemical environment in the containment will not be impacted adversely.
  4. For purposes of environmental qualification, PINGP is divided into various environmental areas. The radiological environmental conditions noted for these areas are the maximum conditions expected to occur and are representative of the whole area. Normal operation parameters represent 40 years of operation. Post-accident radiation exposure levels are determined for a 1-year period following a LOCA.
     - For Westinghouse Qualified Equipment - This equipment remains as described in WCAP-8587 and is qualified for normal and accident source terms for an enveloping core power of 4100 MWt. This core power will continue to envelope PINGP operations at MUR-PU.
     - For Non-Westinghouse Qualified Equipment - The environmental levels currently used to support electrical equipment qualification reflect a core power of 1683 MWt and bound operation at MUR PU conditions inclusive of the margin for power level uncertainty.
  5. The AST radiological consequence analysis is evaluated using a proposed reduction in containment leakage from 0.25 w%/day to 0.15 w%/day. The comparison of the dose inside of containment indicates that the reduced containment leakage of 0.15 w%/day produces essentially the same containment EQ doses as those with 0.25 w%/day. Therefore, the proposed change to reduce the containment leakage rate has no adverse impact on the CLB containment EQ doses.
  6. The CLB source term contains 19 times as much elemental and organic iodine than the AST source term. In addition, the AST containment spray/deposition model removes twice as much iodine as the CLB

containment spray/deposition model. The combination of these items results in the CLB iodine release, prior to SBVS filtration, being approximately 38 times greater than the AST iodine release.

- The combination of these items results in the CLB iodine release into the Auxiliary Building (AB) being approximately 38 times greater than the AST iodine release. Therefore, for the given containment leakage, the CLB EQ dose in the AB remains bounding for the AST.
- The CLB methodology and the AST methodology also differ in that the CLB credits a SBVS charcoal filtration of 70 percent of the elemental and organic iodine from the air passing through the filter, while the AST methodology credits no charcoal filtration. The increase in iodine related EQ dose in the SB due to deletion of the SBVS charcoal would be 3.33 (i.e., 1/(1-0.7) = 0.33). Therefore, for a given containment leakage, the CLB TID EQ dose in the SB remains bounding for the AST without the SBVS charcoal filtration.

- Emergency Diesel Generator Loading
  The credited start time for the ABSVS and SBVS are being increased from that currently credited in the CLB analysis. Both ventilation systems currently automatically load on the associated Emergency Diesel Generator (EDG) during the initial loading sequence step. Although the assumed initiation time in the analysis is being changed, the actual start time is not being changed. Therefore, there is no impact to the current EDG loading sequence.

Figure 3.0-1
Shield Building Ventilation System

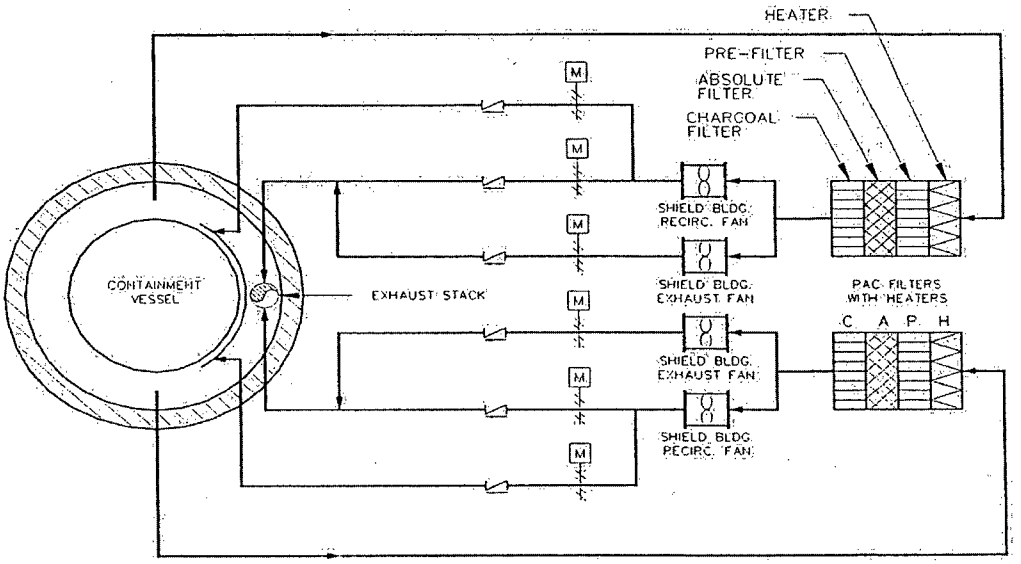

Figure 3.0-2
Auxiliary Building Special Ventilation System

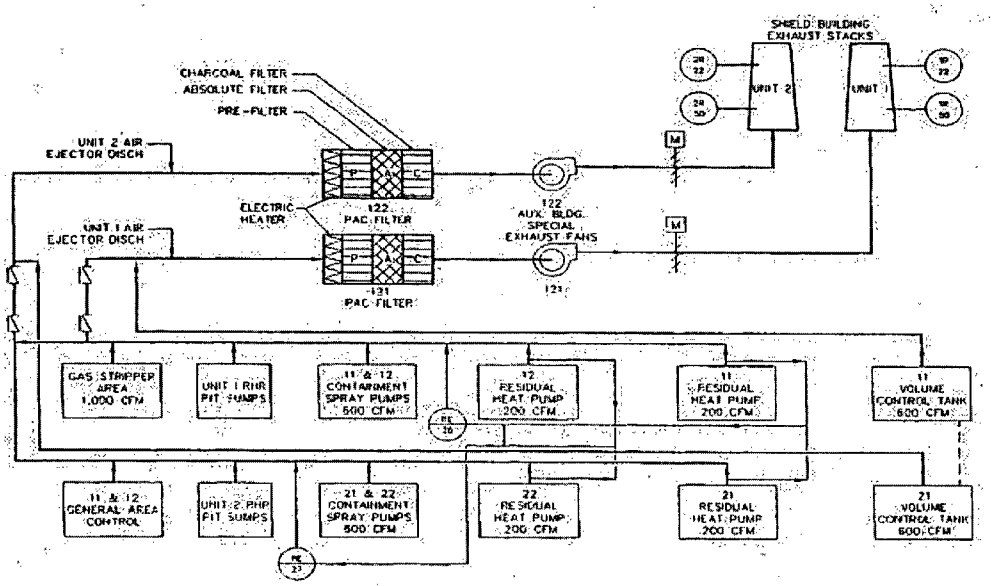

Overview and Organization of Accident Descriptions

This section provides the information on the analyses performed in support of the change of the design basis source terms from the current TID-14844 source terms to the NUREG-1465 Alternative Source Term (Reference 6). The section begins with a presentation of the updated meteorological data that was used to determine revised atmospheric dispersion (χ/Q) factors for the Control Room and the Technical Support Center (Section 3.1). These revised χ/Q values are used in all new radiological dose analyses.

Presentations of the generic analytical models used in the analyses, are then presented (Section 3.2). This includes the formulation for the offsite dose model and detailed HVAC models for both the Control Room and Technical Support Center (TSC). Development of the radiological source terms that are used as a basis for the revised analyses is discussed in Section 3.2. This discussion includes physical nuclide parameters and dose conversion factors. The core nuclide inventory is presented, along with isotopic concentrations for the reactor coolant system at the Technical Specification normal maximum iodine concentration of 0.5 μCi/gm and at the Technical Specification iodine spike limit of 30 μCi/gm. Similarly, secondary system nuclide concentrations are developed for 1% failed fuel and the Technical Specification normal maximum iodine concentration of 0.1 μCi/gm. These discussions are followed by detailed descriptions of the following accidents:

Section 3.3 LOCA
Section 3.4 Fuel Handling Accident
Section 3.5 Heavy Load Drop Accident
Section 3.6 Main Steam Line Break
Section 3.7 Steam Generator Tube Rupture
Section 3.8 Control Rod Ejection
Section 3.9 Locked Rotor

The description of each accident generally utilizes the following format:

- An overview of the methodology of the analysis
- The analytical model(s) used to perform the analysis
- Development/discussion of the radiological source term
- Discussion of the radiological release paths
- Assumptions pertinent to the analysis/Conformance with R.G. 1.183
- A table of important parameters specific to that analysis
- Summary, including the dose consequence results

The contents of each subsection may change depending on the needs for the specific accident under discussion.

A list of commonly used acronyms is presented in Table 3.0-1.

Table 3.0-1
Frequently Used Acronyms

ABSVZ	Auxiliary Building Special Ventilation Zone
ABSVS	Auxiliary Building Special Ventilation System
AHU	Air handling unit
AST	The Alternative Source Term, as defined in NUREG 1465 and Regulatory Guide 1.183
CAAB	Common Area of Auxiliary Building
CLB	The current licensing basis, including analyses, for the PINGP
CR	Control Room
CRE	Control Room (HVAC) Envelope
CREA	Control Rod Ejection Accident
CRSVS	Control Room Special Ventilation System
CSS	Containment Spray System
DCF	Dose Conversion Factor
DEI	Dose Equivalent Iodine-131
EAB	Exclusion Area Boundary
ECCS	Emergency Core Cooling System
ESF	Engineered Safety Feature
FHA	Fuel Handling Accident
FHB	Fuel Handling Building
HLDA	Heavy Load Drop Accident
LPZ	Low Population Zone
LOCA	Loss of Coolant Accident
LOOP	Loss of Offsite Power
LRA	Locked Rotor Accident
MSIV	Main Steam Isolation Valve
MSLB	Main Steam Line Break
PAC	Pre-Filter, Absolute Filter, Charcoal Filter
PORV	Power Operated Relief Valve
RCCA	Rod Cluster Control Assembly
RCP	Reactor Coolant Pump
RCS	Reactor Coolant System
SB	Shield Building
SBVS	Shield Building Ventilation System
SFPSVS	Spent Fuel Pool Special Ventilation System
SG	Steam Generator
SGTR	Steam Generator Tube Rupture
TDAFWP	Turbine Driven Auxiliary Feedwater Pump
TSC	Technical Support Center

3.1 Meteorology and Atmospheric Dispersion

The AST application uses atmospheric dispersion (χ/Q) values for the EAB, the LPZ, the TSC, and the Control Room receptors. As described below, the EAB and LPZ χ/Q values are consistent with current licensing basis. χ/Q values are consistent with those reported in NMC letter L-PI-08-052 (Reference 7) and Xcel Energy letters L-PI-09-033 and L-PI-09-056 (Reference 8 and 9, respectively). In addition, for the Control Room and Technical Support Center, new and revised χ/Q values have been developed.

The values resulting at the Control Room intake are calculated using the NRC-sponsored computer code ARCON96 consistent with the procedures in Regulatory Guide 1.194, "Atmospheric Relative Concentrations for Control Room Radiological Habitability Assessments at Nuclear Power Plants," (Reference 10).

Onsite Meteorological Monitoring Program

The PINGP meteorological tower is located such that it satisfies the guidance in Regulatory Guide 1.23 (Reference 11).

The following instrumentation is located at both the 10 m and 60 m elevations:

- Redundant Wind Speed Instruments
- Redundant Wind Direction Instruments
- Redundant Temperature Instruments

Stability class is determined using temperature difference measurements between the 10 m elevation and 60 m elevation instruments.

Instrument accuracies satisfy Regulatory Guide 1.23, Section C.4. Data collected from these instruments is reviewed for consistency (at least weekly) by on-site staff. Quality assurance measures such as a monthly functional check and annual calibrations are performed to ensure data quality and identify any problems. If results indicate that the instruments are not working properly, corrective actions such as calibrations, repairs or replacements are made.

Site Description

The minimum EAB and LPZ boundaries are located at 715 m and 2414 m, respectively. Note that Plant North is also True North. A simplified diagram of the units and the on-site release points and receptors is provided in Figure 3.1-1.

A description of the topography near the PINGP is provided in Section 2.2.2 of the USAR:

> Topography near the Prairie Island site is fairly level to slightly rolling ground ranging in elevation from 675 ft. to 706 ft, mean sea level. The surface slopes

> gradually toward the Mississippi River on the northeast and to the Vermillion River on the southwest.
>
> Steep bluffs parallel this stretch of the Mississippi River and rise to above a 1,000 ft. elevation approximately 1-½ miles northeast and southwest of the site. Northeast and southwest of these bluffs, ground elevation from 1,000 ft. to 1,200 ft. and is marked by many deeply eroded coulees.

A description of the climate at the PINGP is provided in Section 2.3.2 of the USAR:

> The climate of the site region is basically continental and influenced by the general storms which move eastward along the northern tier of the United States. The geographical location results in frequent changes in weather systems as polar and tropical air masses alternate.

3.1.1 EAB and LPZ χ/Qs

Regulatory Guide 1.183, "Alternative Radiological Source Terms for Evaluating Design Basis Accidents at Nuclear Power Plants," Section 5.3, "Meteorology Assumptions," states:

> Atmospheric dispersion values (χ/Q) for the EAB, the LPZ, and the control room that were approved by the staff during the initial facility licensing or in subsequent licensing proceedings may be used in performing the radiological analyses identified by this guide.

For the AST analyses, χ/Q values for the EAB and the LPZ are consistent with the current licensing basis. The acceptability of using the current licensing basis χ/Q values for the EAB and the LPZ are further described in the following documentation.

- Usage of the current licensing basis χ/Q values for the EAB and the LPZ were approved by the NRC for the Fuel Handling Accident via License Amendment 166 and 156, dated September 2004 (Reference 12).

- License Amendment Request to revise the LOCA and MSLB dose consequence analyses, NMC Letter L-PI-08-052 (Reference 7), uses the current licensing basis χ/Q values for the EAB and the LPZ. Response to related NRC Requests for Additional Information (RAI) in Xcel Energy Letter L-PI-09-056 (Reference 9) provides further justification for using these values.

The χ/Q values for the EAB and the LPZ used in the radiological consequence analyses are shown in Table 3.1-1.

Table 3.1-1
EAB and LPZ χ/Q values (sec/m^3)

Location	Distance	Time Period	χ/Q value
EAB	715 meters	0 – 8 hour	6.49E-04
LPZ	2414 meters	0 – 8 hours	1.77E-04
		8 – 24 hours	3.99E-05
		24 – 96 hours	7.12E-06
		96 – 720 hours	1.04E-06

As discussed in NRC Safety Evaluation Report for License Amendment 191 (Unit 1) and 180 (Unit 2), (Reference 12), although the PINGP EAB is calculated for a 0-8 hour time period it is acceptable to apply the same value for the 0-2 hour time period. No different methodology or assumptions related to the EAB χ/Q value are implemented in the AST analyses. Therefore, consistent with the current licensing basis, it is acceptable to use the 0-8 hour time period value for the AST analysis.

3.1.2 Meteorology Data

For the AST analyses, new and revised χ/Q values were determined for the Control Room and Technical Support Center. A continuous temporally representative 5-year period of hourly average data from the PINGP meteorological tower (i.e., January 1, 1993 through December 31, 1997) is used in these analyses. The data for these five years was selected as previous reviews have indicated that the data is of good quality. Furthermore, this set of data has been previously reviewed by the NRC as part of previous submittals. The PINGP meteorological tower, instrumentation and quality assurance measures are described above. As described above, redundant measurements were taken at both the 10 meter and 60 meter levels on the onsite meteorological tower which helps facilitate a data recovery rate of approximately 99 percent. The high value of 99% data recovery is attributed to the redundant instruments on the meteorological monitoring tower. These data were then supplemented by measurements from a back-up tower when data were unavailable from the primary tower instruments.

Each hour of data, at a minimum, has wind direction, wind speed and temperature at the 10-meter level and at the 60-meter level. This was described in a license amendment request, dated January 20, 2004 (Reference 13):

> The data recovery for each of the five years is greater than 90%. During Jan. 1, 1993 to Dec. 31, 1997 time period the data was reviewed annually by an independent meteorological organization to ensure that the data is of high quality. The conclusions from these independent assessments is that the meteorological data was judged complete, accurate and representative.

As discussed in the associated License Amendment 166 and 156, dated September 2004 (Reference 12):

The NRC staff performed a quality review of the 1993 through 1997 onsite hourly meteorological data using the methodology described in NUREG-0917, "Nuclear Regulatory Commission Staff Computer Programs for Use with Meteorological Data." Further review was performed using computer spreadsheets. With respect to atmospheric stability measurements, stable and neutral conditions were consistently reported to occur at night and unstable and neutral conditions during the day. The frequency, length, and time of occurrence of stable and unstable atmospheric conditions were very congruent with expected meteorological conditions. Wind speed and direction frequency distributions for each measurement channel were also very consistent from year to year and when comparing measurements between the two heights.

In summary, NRC staff has reviewed the available information relative to the onsite meteorological measurements program provided by the licensee. On the basis of this review, the NRC staff concludes that these data provide an acceptable basis for making estimates for design basis accident assessments.

This same 1993 through 1997 meteorological data is used in the Control Room and Technical Support Center χ/Q assessment presented herein.

3.1.3 Control Room and Technical Support Center χ/Q Analyses

The following release points are used in the AST analyses for determining the dose to the Control Room operators. Figure 3.1-1 shows the locations of each release point relative to the Control Room and TSC ventilation intakes:

- Unit 1 and Unit 2 Shield Building Ventilation Stack
- Unit 1 and Unit 2 Auxiliary Building Normal Ventilation Make-Up Air Intake. As discussed later in this submittal, the Auxiliary Building Normal Ventilation Make-Up Air Intake is a potential release point for backleakage to the Refueling Water Storage Tank (RWST) during post-LOCA mitigation
- Common Area of the Auxiliary Building (two possible source locations are modeled to account for proximity to both control room ventilation intakes)
- Unit 1 and Unit 2 Main Steam Safety Valves/Steam Generator Power Operated Relief Valves (MSSVs/PORVs)
- Unit 1 and Unit 2 Turbine Driven Auxiliary Feedwater Pump (TDAFWP) Steam Exhaust)

For determining the dose to personnel in the Technical Support Center for a Loss of Coolant Accident, the following release points are considered:

- Unit 1 and Unit 2 Shield Building Ventilation Stack
- Unit 1 and Unit 2 Auxiliary Building Normal Ventilation Make-Up Air Intake

For each of the possible release locations, the postulated receptor is the normal intake for the Control Room ventilation system or the makeup air intake for the TSC Ventilation

System, as appropriate. Using the normal intake for the Control Room ventilation system and the makeup air intake for the TSC Ventilation System as the postulated receptors is conservative as the relative location, for each, to the potential sources results in higher atmospheric dispersion factors. The normal intake for the Control Room Ventilation system is used as the receptor for the intake prior to isolation, and unfiltered inleakage and inleakage attributed to ingress and egress following isolation. The make-up air intake for the TSC Ventilation System is used as the receptor for the filtered makeup, TSC unfiltered inleakage and for inleakage attributed to ingress and egress.

The source and receptor locations are illustrated in Figure 3.1-1. A key to the source and receptor designations shown on Figure 3.1-1 is provided in Table 3.1-2.

Figure 3.1-1 - Simplified Plot Plan with Release Points and Receptors

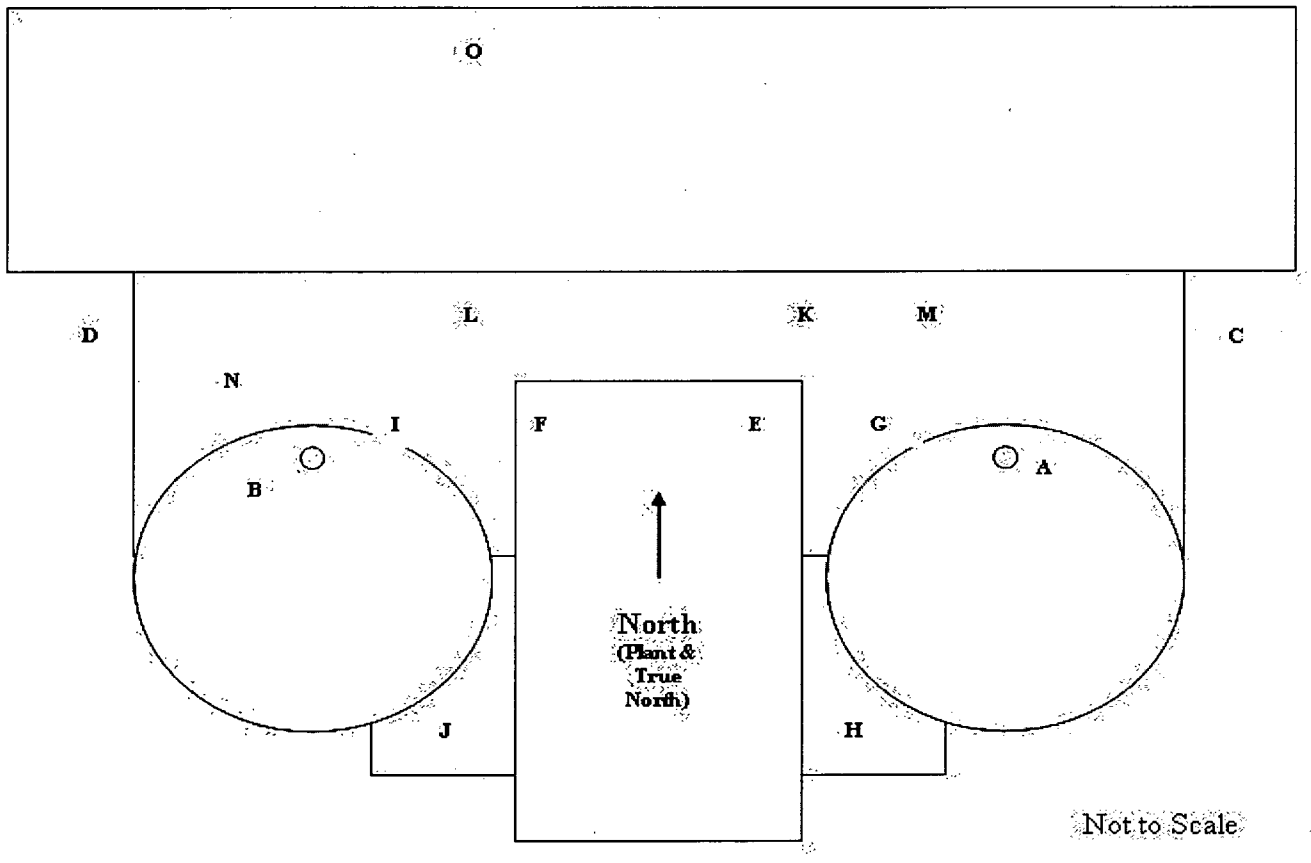

Table 3.1-2
Key to Figure 3.1-1; Release Points and Receptor Locations

Release Source or Receptor Location	Figure 3.1-1 Label	Applicable Accidents
Unit 1 Shield Building Vent Stack	A	LOCA, CREA
Unit 2 Shield Building Vent Stack	B	LOCA, CREA
Unit 1 Aux Bldg Normal Vent Make-Up Air Intake	C	LOCA
Unit 2 Aux Bldg Normal Vent Make-Up Air Intake	D	LOCA
Common Area of Aux Bldg	E	FHA, MSLB
Common Area of Aux Bldg	F	FHA, MSLB
Unit 1 Group 1 MSSVs/PORVs	G	MSLB, SGTR, LRA, CREA
Unit 1 Group 2 MSSVs/PORVs	H	SGTR, LRA, CREA
Unit 2 Group 1 MSSVs/PORVs	I	MSLB, SGTR, LRA, CREA
Unit 2 Group 2 MSSVs/PORVs	J	SGTR, LRA, CREA
Unit 1 TDAFWP Steam Exhaust	K	MSLB, SGTR, LRA, CREA
Unit 2 TDAFWP Steam Exhaust	L	MSLB, SGTR, LRA, CREA
121 (Train A) Control Room Ventilation Intake(*)	M	All
122 (Train B) Control Room Ventilation Intake(*)	N	All
TSC Ventilation Makeup Air Intake	O	LOCA

(*) The control room and associated control room ventilation system is shared between Units 1 and 2; thus, it is designated by Trains in lieu of by Units.

To ensure that the AST analysis was comprehensive, possible source-receptor pairs were considered from an accident in either Unit 1 or Unit 2 to either Control Room Ventilation Intake. From this set of χ/Q values, limiting release locations can be identified. χ/Q values for the following source-receptor pairs were determined for possible use in the AST dose analyses for the Control Room and Technical Support Center.

- Unit 1 Shield Building Ventilation Stack to 121 CR Vent Intake (*)
- Unit 1 Shield Building Ventilation Stack to 122 CR Vent Intake (*)
- Unit 2 Shield Building Ventilation Stack to 121 CR Vent Intake (*)
- Unit 2 Shield Building Ventilation Stack to 122 CR Vent Intake (*)
- Unit 1 Aux Bldg Normal Vent Make-Up Air Intake to 121 CR Vent Intake
- Unit 1 Aux Bldg Normal Vent Make-Up Air Intake to 122 CR Vent Intake
- Unit 2 Aux Bldg Normal Vent Make-Up Air Intake to 121 CR Vent Intake
- Unit 2 Aux Bldg Normal Vent Make-Up Air Intake to 122 CR Vent Intake
- Unit 1 Shield Building Ventilation Stack to TSC Vent Intake
- Unit 2 Shield Building Ventilation Stack to TSC Vent Intake
- Unit 1 Aux Bldg Normal Vent Make-Up Air Intake to TSC Vent Intake
- Unit 2 Aux Bldg Normal Vent Make-Up Air Intake to TSC Vent Intake
- Common Area of Aux Bldg to 121 CR Vent Intake
- Common Area of Aux Bldg to 122 CR Vent Intake
- Unit 1 TDAFWP Steam Exhaust to 121 CR Vent Intake
- Unit 1 TDAFWP Steam Exhaust to 122 CR Vent Intake
- Unit 2 TDAFWP Steam Exhaust to 121 CR Vent Intake
- Unit 2 TDAFWP Steam Exhaust to 122 CR Vent Intake
- Unit 1 Group 1 MSSVs/PORVs to 121 CR Vent Intake (*)
- Unit 1 Group 1 MSSVs/PORVs to 122 CR Vent Intake (*)
- Unit 1 Group 2 MSSVs/PORVs to 121 CR Vent Intake (*)
- Unit 1 Group 2 MSSVs/PORVs to 122 CR Vent Intake (*)
- Unit 2 Group 1 MSSVs/PORVs to 121 CR Vent Intake (*)
- Unit 2 Group 1 MSSVs/PORVs to 122 CR Vent Intake (*)
- Unit 2 Group 2 MSSVs/PORVs to 121 CR Vent Intake (*)
- Unit 2 Group 2 MSSVs/PORVs to 122 CR Vent Intake (*)

χ/Q values for source-receptor pairs identified with an asterisk (*) were previously submitted to the NRC in Xcel Energy Letter L-PI-09-056 (Reference 9). For the AST analyses herein, in order to be conservative, for all of the identified source locations, the postulated control room receptor is the Control Room Ventilation Intake. This receptor location is conservative as it results in the minimum distances between the source and the receptor.

The discussion of each individual accident in Sections 3.3 through 3.9 address the release point(s) assumed for that accident. The postulation of a loss of offsite power does not change the location of release points or receptor locations.

Source release points and receptor locations are selected to be conservative if off-site power is available or not.

Updated Control Room χ/Q values for releases from the Aux Bldg Normal Vent Make-Up Air Intake, from the Common Area of Aux Bldg, and from the TDAFWP Steam Exhaust were calculated using the computer code ARCON96 (Reference 14) using the methods of Regulatory Guide 1.194. Updated TSC χ/Q values for releases from the Shield Building Vent Stack, and from the Aux Bldg Normal Vent Make-Up Air Intake were also calculated using the computer code ARCON96 (Reference 14) using the methods of Regulatory Guide 1.194.

The PINGP meteorological databases for the five-year period (1993-1997) were used in the ARCON96 modeling analysis . Wind measurements were taken at 10 m and the vertical temperature difference was measured between 60 m and 10 m. The minimum wind speed (i.e., wind threshold) was set to the ARCON96 default value of 0.5 m/sec in accordance with Regulatory Guide 1.194, Table A-2.

ARCON96 requires the direction from the receptor to the source. Because plant north and true north are aligned, there is no need to correct directions.

The height of these release points are all less than 2.5 times the height of their adjacent buildings and therefore, in accordance with Regulatory Guide 1.194, are modeled as "ground level" releases. Buoyancy or mechanical jets of high energy releases are not credited in the χ/Q analyses.

The Shield Building Vent Stack release is modeled as a point source.

The Aux Bldg Normal Vent Make-Up Air Intake is modeled as a diffuse release as described in NMC Letter L-PI-08-052 and Xcel Energy Letter L-PI-09-056 (References 7 and 9, respectively). Specifically, per letter L-PI-09-056:

> "The Refueling Water Storage Tank (RWST) RWST for each unit includes a vent at the top of the tank which discharges into the cylindrical concrete structure which encloses the tank. Personnel access to the top of the tank is provided by a 4'6" x 3' opening in the concrete enclosure which allows a path for released activity to be discharged into the Auxiliary Building Normal Ventilation System equipment room. With the normal ventilation system isolated due to the SI signal and the start of the Auxiliary Building Special Ventilation System, there will be no forced air movement in the room other than any natural circulation or differential pressure induced flow between the room and ductwork in the room. With no forced ventilation, the activity discharged from the RWST vent is assumed to be slowly distributed throughout the room. Some activity is assumed to seep into the ventilation system supply duct through small openings since the ducts are not sealed. This activity will then mix with the air in the duct and be slowly dispersed through the louver and into the environment. No

> credit is taken for any mixing that would reduce the concentration prior to release from the louvers. Because of this slow mixing of activity into the room and into the ductwork, releases are assumed to be well mixed by the time they reach the environment and leave the duct uniformly over the face of the louver. Therefore, the type of source that best represents this type of release would be a diffuse source as described in Regulatory Guide 1.194."

The subsequent NRC SER concluded that modeling this release location as a diffuse source is acceptable for the receptor described in Reference 15.

> "The MU air intake louvers on the sides of the auxiliary building face away from the CR and were modeled as two-dimensional vertical diffuse sources. The NRC staff has determined that this is acceptable in the current LAR since the source is applied only to the inleakage part of the dose assessment. However, if the effluent from the MU air intake louvers is modeled to other receptors in future dose assessments, assumptions regarding the specific case should be evaluated."

For the AST dose analyses, different receptors are modeled; i.e., the CR vent intakes and the TSC vent intake. For either the CR vent intakes or the TSC vent intake, the MU air intake louvers on the side of the auxiliary building face away from the receptors. The release mechanisms described in Reference 15 are the same for the AST analyses. Therefore, it is considered acceptable to model the release from the ABNV MU air intake louvers as a diffuse release.

The CAAB release is modeled as a diffuse release as described in License Amendment 166 (Unit 1) and 156 (Unit 2). In letter L-PI-04-082, dated July 13, 2004, (Reference 16), the PINGP provided the inputs used in the ARCON96 computer code for calculating the χ/Q values from the CAAB to the Control Room Vent Intake. During subsequent review of the determination of these χ/Q values (during preparation of this AST license submittal) it was discovered that the calculation did not account for the included angle between the source-receptor line of sight and the vertical axis. Determination shows that this included angle is less than 45° for the CAAB to both the 121 CR Vent Intake and the 122 CR Vent Intake. Consistent with Regulatory Guide 1.194 (Reference 10), Section 3.2.4.8, for the case where the subtended angle is less than 45°, the value for σ_z is set to 0.0. It is noted that, for this case, Section 3.2.4.8 indicates that σ_y should be set to 0.0. However, this is believed to be in error and that setting σ_z to 0.0 is consistent with the definition of σ_z.

The MSSV/PORV release location is modeled as a diffuse source to account for possible releases from the MSSVs or the PORVs. As shown in Figure 3.1-2, the exhaust groups can be determined based on an area of a rectangle formed by connecting the centers of the exhaust locations.

Figure 3.1-2
Unit 1 MSSV/PORV Source

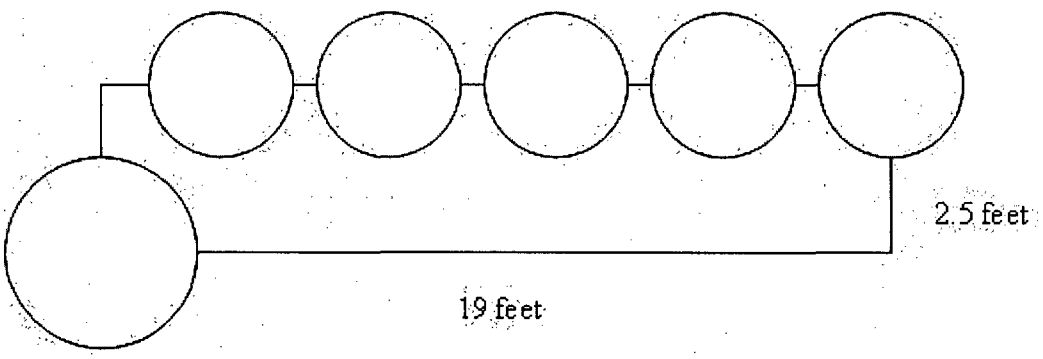

The characteristic dimension, associated with the initial diffusion coefficient, for the horizontal source is assumed to be the diameter of a circle with area equal to that of the rectangular source. In this case, based on a rectangle with dimensions of 19 feet long and 2.5 feet wide, the diameter = 2.37 meters.

From Regulatory Guide 1.194, Section 3.2.4.4, Equation (3)

$$\sigma_{y0} = \frac{\text{Width}_{\text{area source}}}{6} = 0.395 \text{ (0.4 is used in the calculation)}$$

In this case σ_z = 0.0 to model the horizontal source.

The TDAFWP Steam Exhaust and Steam Dump release location is modeled as a diffuse release to address possible steam releases from these locations. As shown in Figure 3.1-3, the exhaust groups can be determined based on an area of a triangle formed by connecting the centers of the exhaust locations.

Figure 3.1-3
Unit 1 TDAFWP / Steam Dump Steam Source

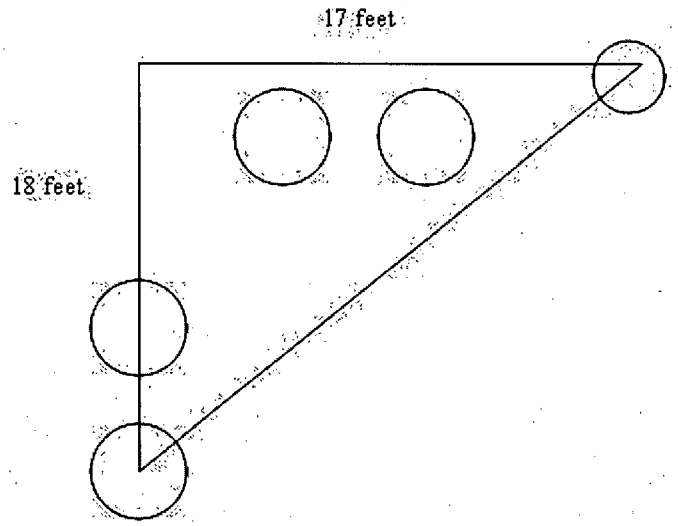

The characteristic dimension, associated with the initial diffusion coefficient, for the horizontal source is assumed to be the diameter of a circle with area equal to that of the triangular source. In this case, based on the above dimensions, the diameter = 4.254 meters.

From Regulatory Guide 1.194, Section 3.2.4.4, Equation (3)

$$\sigma_{y0} = \frac{\text{Width}_{\text{area source}}}{6} = 0.709 \text{ (0.7 is used in the calculation)}$$

In this case σ_z = 0.0 to model the horizontal source.

Tables 3.1-3 through 3.1-10 present data that was used to develop the ARCON96 analyses. A summary of the resulting χ/Q s for each source/receptor pair is presented in Table 3.1-11. To ensure that the radiological dose results from the AST analyses are conservative, the limiting χ/Q values from Table 3.1-11 are used. Table 3.1-12 presents a summary of the ARCON96 results used in the radiological analyses. Xcel Energy is requesting NRC approval of the χ/Q values in Table 3.1-12.

<u>Source-Receptor Pair Distances Less Than 10 Meters</u>
Regulatory Guide 1.194, Regulatory Position C.3.4, states:

> "If the distance to the receptor is less than about 10 meters, the ARCON96 code and the procedures in Regulatory Position 4 should not be used to assess χ/Q values. These situations will need to be addressed on a case-by-case basis."

Tables 3.1-3 through 3.1-10 show the distances for each source-receptor pair. As shown, two of the source-receptor pairs have distances that are less than 10 meters.

- Table 3.1-4 shows that the distance from the Unit 2 Aux Bldg Normal Vent Make-Up Air Intake to the 122 CR Vent Intake is 9.2 meters.

- Table 3.1-8 shows that the distance from the Unit 1 TDAFWP Steam Exhaust to the 121 CR Vent Intake is 9.6 meters.

At 9.2 meters and 9.6 meters, the distances for these two source-receptor pairs are within 10% of the recommended 10 meters in Regulatory Guide 1.194. Therefore, given this relatively minor difference, these two distances are considered to be "about 10 meters" and, thus, consistent with Regulatory Guide 1.194 and acceptable for use with the ARCON96 computer code. In addition, conservatism is present in the choice of the source and receptor combinations, such that the modeled dispersion factors are conservative.

In the design basis accident analysis, the χ/Q values are conservatively selected from the various source and receptor combinations to maximize the doses. The PINGP has a common control room (CR) having two air intakes, with one on each side of Unit 1 and Unit 2. The Refueling Water Storage Tank Vent (i.e., M.U. Air Intake Louver) and ADV/TDAFW pump exhaust are unit-specific and are not interconnected. If the unit-specific design basis accident (DBA) is analyzed, then there will be only one combination of source/receptor location at a distance of less than 10 meters as shown in Tables 3.1-4 and 3.1-8.

The post-LOCA RWST leakage release through the M.U. Air Intake Louver is conservatively postulated as the RWST release point in order to maximize the CR dose. As described in Section 3.3, the RWST leakage release starts at 35 hours after onset of a LOCA due to the time lag associated with the transit time of leakage through piping. During this time the Auxiliary Building Special Ventilation Zone (ABSVZ) will be in operation within less than 20 minutes; which automatically secures the operation of the normal AB HVAC system and establishes a slightly negative pressure in the areas surrounding the ABSVZ in the AB due to ABSVZ draw down of air through this areas. If the M.U. Air Intake Louver is realistically not a feasible release path, then after 35 hours into accident the RWST leakage would either be confined within the areas surrounding the RWST or it will leak into the ABSVZ through the door seals that form the ABSVZ boundary. Leakage from the RWST would be filtered through the ABSVZ charcoal filter before being released to the environment through the shield building vent stack, with its associated substantially lower χ/Qs. Since the areas surrounding the AB where the RWST leakage takes place will be relatively under negative pressure, the RWST leakage cannot migrate to the atmosphere through the AB normal ventilation duct. Therefore, the postulated use of M.U. Air Intake Louver χ/Qs for the RWST is very conservative, which compensates for

any potential non-conservatism introduced by its release point being at a distance of 0.8 meters less than the distance of 10 meters. Based on the preceding justification, the use of M.U. Air Intake Louver χ/Qs are conservative for the post-LOCA RWST leakage path.

The Unit 1 ADV/TDAFW pump exhaust at 9.6 meters from the Unit 1 CR air intake as shown in Table 3.1-8. The Unit 1 ADVs and TDAFW pump exhaust are located in the vicinity of each other. Reference 10, Regulatory Position 3.2.4.7, allows assuming the release from multiple vents as if the vents were an area diffused source. The ADV & TDAFW exhaust were collectively modeled as a diffused area source with the source/receptor distance of 9.6 meters between the centerlines of the area source and CR Unit 1 (CR1) air intake. Based on plant drawings, the Unit 1 TDAFW pump exhaust is located at a horizontal separation distance of 10.67 meters from the Unit 1 CR air intake instead of the conservatively modeled 9.6 meters from the center of area source. In addition, although the TDAFW pump exhaust has a steam head, the kinetic energy in the steam release through this release path will elevate the plume higher than the elevation of the exhaust pipe due to buoyancy and momentum associated with the steam release (Reference 10, Section 6). This additional steam plume rise will increase the source/receptor slant distance to more than 10.67 meters. Based on the above technical bases, the TDAFW pump exhaust χ/Qs calculated for the source/receptor distance of 9.6 meters is conservative.

Table 3.1-3
PINGP Design Inputs used to Determine ARCON96 χ/Q Values for Shield Building Vent Stack Releases to CR Vent Intake

ARCON96 Parameter	Source/Receptor			
	Unit 1 Shield Bldg Vent Stack/ 121 CR Vent Intake	**Unit 1 Shield Bldg Vent Stack/ 122 CR Vent Intake**	**Unit 2 Shield Bldg Vent Stack/ 121 CR Vent Intake**	**Unit 2 Shield Bldg Vent Stack/ 122 CR Vent Intake**
Meteorological Information:				
Period of Meteorological Data	1993 – 1997	1993 – 1997	1993 – 1997	1993 – 1997
Lower Measurement Height (m)	10.0	10.0	10.0	10.0
Upper Measurement Height (m)	60.0	60.0	60.0	60.0
Wind Speed Units	miles/hour	miles/hour	miles/hour	miles/hour
Meteorological Data File Names	PI93.met, PI94.met, PI95.met, PI96.met, PI97.met	PI93.met, PI94.met, PI95.met, PI96.met, PI97.met	PI93.met, PI94.met, PI95.met, PI96.met, PI97.met	PI93.met, PI94.met, PI95.met, PI96.met, PI97.met
Source Parameters				
Release Type	Ground	Ground	Ground	Ground
Release Height	56.7	56.7	56.7	56.7
Building Area	2176	2176	2176	2176
Vertical Velocity (m/sec)	0.0	0.0	0.0	0.0
Stack Flow (m^3/sec)	0.0	0.0	0.0	0.0
Stack Radius (m)	0.0	0.0	0.0	0.0
Initial Diffusion Coefficients σ_y, σ_z (m)	0.0, 0.0	0.0, 0.0	0.0, 0.0	0.0, 0.0
Receptor Parameters				
Distance to Receptor (m)	24	82	62	17
Intake Height (m)	25	25	25	25
Elevation Difference (m)	0	0	0	0
Direction to Source (deg az)	150	100	250	148
Default Information				
Surface Roughness Length (m)	0.20	0.20	0.20	0.20
Wind Direction Window (deg az)	90	90	90	90
Minimum Wind Speed (m/sec)	0.5	0.5	0.5	0.5
Averaging Sector Width Constant	4.3	4.3	4.3	4.3

Table 3.1-4
PINGP Design Inputs used to Determine ARCON96 χ/Q Values for Aux Bldg Normal Vent Air Intake Releases to CR Vent Intake

ARCON96 Parameter	Source/Receptor			
	Unit 1 Aux Bldg Normal Vent Make-Up Air Intake/ 121 CR Vent Intake	**Unit 1 Aux Bldg Normal Vent Make-Up Air Intake/ 122 CR Vent Intake**	**Unit 2 Aux Bldg Normal Vent Make-Up Air Intake/ 121 CR Vent Intake**	**Unit 2 Aux Bldg Normal Vent Make-Up Air Intake/ 122 CR Vent Intake**
Meteorological Information:				
Period of Meteorological Data	1993 – 1997	1993 – 1997	1993 – 1997	1993 – 1997
Lower Measurement Height (m)	10.0	10.0	10.0	10.0
Upper Measurement Height (m)	60.0	60.0	60.0	60.0
Wind Speed Units	miles/hour	miles/hour	miles/hour	miles/hour
Meteorological Data File Names	PI93.met, PI94.met, PI95.met, PI96.met, PI97.met	PI93.met, PI94.met, PI95.met, PI96.met, PI97.met	PI93.met, PI94.met, PI95.met, PI96.met, PI97.met	PI93.met, PI94.met, PI95.met, PI96.met, PI97.met
Source Parameters				
Release Type	Ground	Ground	Ground	Ground
Release Height	16.5	16.5	16.5	16.5
Building Area	2176	2176	2176	2176
Vertical Velocity (m/sec)	0.0	0.0	0.0	0.0
Stack Flow (m^3/sec)	0.0	0.0	0.0	0.0
Stack Radius (m)	0.0	0.0	0.0	0.0
Initial Diffusion Coefficients σ_y, σ_z (m)	0.5, 0.5	0.5, 0.5	0.5, 0.5	0.5, 0.5
Receptor Parameters				
Distance to Receptor (m)	25	92.5	75.4	9.2
Intake Height (m)	25	25	25	25
Elevation Difference (m)	0	0	0	0
Direction to Source (deg az)	88	88	91	296
Default Information				
Surface Roughness Length (m)	0.20	0.20	0.20	0.20
Wind Direction Window (deg az)	90	90	90	90
Minimum Wind Speed (m/sec)	0.5	0.5	0.5	0.5
Averaging Sector Width Constant	4.3	4.3	4.3	4.3

Table 3.1-5
PINGP Design Inputs used to Determine ARCON96 χ/Q Values for Shield Building Vent Stack Releases to TSC Vent Intake

ARCON96 Parameter	Source/Receptor	
	Unit 1 Shield Bldg Vent Stack/ TSC Vent Intake	Unit 2 Shield Bldg Vent Stack/ TSC Vent Intake
Meteorological Information:		
Period of Meteorological Data	1993 – 1997	1993 – 1997
Lower Measurement Height (m)	10.0	10.0
Upper Measurement Height (m)	60.0	60.0
Wind Speed Units	miles/hour	miles/hour
Meteorological Data File Names	PI93.met, PI94.met, PI95.met, PI96.met, PI97.met	PI93.met, PI94.met, PI95.met, PI96.met, PI97.met
Source Parameters		
Release Type	Ground	Ground
Release Height (m)	56.55	56.55
Building Area (m^2)	2176	2176
Vertical Velocity (m/sec)	0.0	0.0
Stack Flow (m^3/sec)	0.0	0.0
Stack Radius (m)	0.0	0.0
Initial Diffusion Coefficients σ_y, σ_z (m)	0.0, 0.0	0.0, 0.0
Receptor Parameters		
Distance to Receptor (m)	87.25	60.78
Intake Height (m)	19.8	19.8
Elevation Difference (m)	0	0
Direction to Source (deg az)	133	190
Default Information		
Surface Roughness Length (m)	0.20	0.20
Wind Direction Window (deg az)	90	90
Minimum Wind Speed (m/sec)	0.5	0.5
Averaging Sector Width Constant	4.3	4.3

Table 3.1-6
PINGP Design Inputs used to Determine ARCON96 χ/Q Values for Aux Bldg Normal Vent Air Intake Releases to TSC Vent Intake

ARCON96 Parameter	Source/Receptor	
	Unit 1 Aux Bldg Normal Vent Make-Up Air Intake/ TSC Vent Intake	**Unit 2 Aux Bldg Normal Vent Make-Up Air Intake/ TSC Vent Intake**
Meteorological Information:		
Period of Meteorological Data	1993 – 1997	1993 – 1997
Lower Measurement Height (m)	10.0	10.0
Upper Measurement Height (m)	60.0	60.0
Wind Speed Units	miles/hour	miles/hour
Meteorological Data File Names	PI93.met, PI94.met, PI95.met, PI96.met, PI97.met	PI93.met, PI94.met, PI95.met, PI96.met, PI97.met
Source Parameters		
Release Type	Ground	Ground
Release Height	16.5	16.5
Building Area	2176	2176
Vertical Velocity (m/sec)	0.0	0.0
Stack Flow (m^3/sec)	0.0	0.0
Stack Radius (m)	0.0	0.0
Initial Diffusion Coefficients σ_y, σ_z (m)	0.5, 0.5	0.5, 0.5
Receptor Parameters		
Distance to Receptor (m)	87.6	46.9
Intake Height (m)	20	20
Elevation Difference (m)	0	0
Direction to Source (deg az)	117	212
Default Information		
Surface Roughness Length (m)	0.20	0.20
Wind Direction Window (deg az)	90	90
Minimum Wind Speed (m/sec)	0.5	0.5
Averaging Sector Width Constant	4.3	4.3

Table 3.1-7
PINGP Design Inputs used to Determine ARCON96
χ/Q Values for Common Area of Aux Bldg Releases to CR Vent Intakes

ARCON96 Parameter	Source/Receptor	
	Common Area of Aux Bldg/ 121 CR Vent Intake	Common Area of Aux Bldg/ 122 CR Vent Intake
Meteorological Information:		
Period of Meteorological Data	1993 – 1997	1993 – 1997
Lower Measurement Height (m)	10.0	10.0
Upper Measurement Height (m)	60.0	60.0
Wind Speed Units	miles/hour	Miles/hour
Meteorological Data File Names	PI93.met, PI94.met, PI95.met, PI96.met, PI97.met	PI93.met, PI94.met, PI95.met, PI96.met, PI97.met
Source Parameters		
Release Type	Ground	Ground
Release Height (m)	30	30
Building Wake Area (m^2)	2176	2176
Vertical Velocity (m/sec)	0.0	0.0
Stack Flow (m^3/sec)	0.0	0.0
Stack Radius (m)	0.0	0.0
Initial Diffusion Coefficients σ_y, σ_z (m)	8.7, 0.0	9.95, 0.0
Receptor Parameters		
Distance to Receptor (m)	16.9	23.3
Intake Height (m)	25.7	25.7
Elevation Difference (m)	0	0
Direction to Source (deg az)	212	128
Default Information		
Surface Roughness Length (m)	0.20	0.20
Wind Direction Window (deg az)	90	90
Minimum Wind Speed (m/sec)	0.5	0.5
Averaging Sector Width Constant	4.3	4.3

Table 3.1-8
PINGP Design Inputs used to Determine ARCON96 χ/Q Values for TDAFWP Steam Release to CR Vent Intakes

ARCON96 Parameter	Source/Receptor			
	Unit 1 TDAFWP Steam Exhaust/ 121 CR Vent Intake	**Unit 1 TDAFWP Steam Exhaust/ 122 CR Vent Intake**	**Unit 2 TDAFWP Steam Exhaust/ 121 CR Vent Intake**	**Unit 2 TDAFWP Steam Exhaust/ 122 CR Vent Intake**
Meteorological Information:				
Period of Meteorological Data	1993 – 1997	1993 – 1997	1993 – 1997	1993 – 1997
Lower Measurement Height (m)	10.0	10.0	10.0	10.0
Upper Measurement Height (m)	60.0	60.0	60.0	60.0
Wind Speed Units	miles/hour	miles/hour	miles/hour	miles/hour
Meteorological Data File Names	PI93.met, PI94.met, PI95.met, PI96.met, PI97.met	PI93.met, PI94.met, PI95.met, PI96.met, PI97.met	PI93.met, PI94.met, PI95.met, PI96.met, PI97.met	PI93.met, PI94.met, PI95.met, PI96.met, PI97.met
Source Parameters				
Release Type	Ground	Ground	Ground	Ground
Release Height	28	28	28	28
Building Area	2176	2176	2176	2176
Vertical Velocity (m/sec)	0.0	0.0	0.0	0.0
Stack Flow (m^3/sec)	0.0	0.0	0.0	0.0
Stack Radius (m)	0.0	0.0	0.0	0.0
Initial Diffusion Coefficients σ_y, σ_z (m)	0.7, 0.0	0.7, 0.0	0.7, 0.0	0.7, 0.0
Receptor Parameters				
Distance to Receptor (m)	9.6	51.6	39.8	21.9
Intake Height (m)	25	25	25	25
Elevation Difference (m)	0	0	0	0
Direction to Source (deg az)	270	89	270	70
Default Information				
Surface Roughness Length (m)	0.20	0.20	0.20	0.20
Wind Direction Window (deg az)	90	90	90	90
Minimum Wind Speed (m/sec)	0.5	0.5	0.5	0.5
Averaging Sector Width Constant	4.3	4.3	4.3	4.3

Table 3.1-9
PINGP Design Inputs used to Determine ARCON96 χ/Q Values for Unit 1 MSSVs/PORVs Steam Release to CR Vent Intakes

ARCON96 Parameter	Source/Receptor			
	Unit 1 MSSVs/SG PORVs Group 1/ 121 CR Vent Intake	Unit 1 MSSVs/SG PORVs Group 1/ 122 CR Vent Intake	Unit 1 MSSVs/SG PORVs Group 2/ 121 CR Vent Intake	Unit 1 MSSVs/SG PORVs Group 2/ 122 CR Vent Intake
Meteorological Information:				
Period of Meteorological Data	1993 – 1997	1993 – 1997	1993 – 1997	1993 – 1997
Lower Measurement Height (m)	10.0	10.0	10.0	10.0
Upper Measurement Height (m)	60.0	60.0	60.0	60.0
Wind Speed Units	miles/hour	miles/hour	miles/hour	miles/hour
Meteorological Data File Names	PI93.met, PI94.met, PI95.met, PI96.met, PI97.met	PI93.met, PI94.met, PI95.met, PI96.met, PI97.met	PI93.met, PI94.met, PI95.met, PI96.met, PI97.met	PI93.met, PI94.met, PI95.met, PI96.met, PI97.met
Source Parameters				
Release Type	Ground	Ground	Ground	Ground
Release Height	28	28	28	28
Building Area	2176	2176	2176	2176
Vertical Velocity (m/sec)	0.0	0.0	0.0	0.0
Stack Flow (m^3/sec)	0.0	0.0	0.0	0.0
Stack Radius (m)	0.0	0.0	0.0	0.0
Initial Diffusion Coefficients σ_y, σ_z (m)	0.4, 0.0	0.4, 0.0	0.4, 0.0	0.4, 0.0
Receptor Parameters				
Distance to Receptor (m)	16.1	67.1	53.7	75.6
Intake Height (m)	25	25	25	25
Elevation Difference (m)	0	0	0	0
Direction to Source (deg az)	180	97	183	126
Default Information				
Surface Roughness Length (m)	0.20	0.20	0.20	0.20
Wind Direction Window (deg az)	90	90	90	90
Minimum Wind Speed (m/sec)	0.5	0.5	0.5	0.5
Averaging Sector Width Constant	4.3	4.3	4.3	4.3

Table 3.1-10
PINGP Design Inputs used to Determine ARCON96 χ/Q Values for Unit 2 MSSVs/PORVs Steam Release to CR Vent Intakes

ARCON96 Parameter	Source/Receptor			
	Unit 2 MSSVs/SG PORVs Group 1/ 121 CR Vent Intake	**Unit 2 MSSVs/SG PORVs Group 1/ 122 CR Vent Intake**	**Unit 2 MSSVs/SG PORVs Group 2/ 121 CR Vent Intake**	**Unit 2 MSSVs/SG PORVs Group 2/ 122 CR Vent Intake**
Meteorological Information:				
Period of Meteorological Data	1993 – 1997	1993 – 1997	1993 – 1997	1993 – 1997
Lower Measurement Height (m)	10.0	10.0	10.0	10.0
Upper Measurement Height (m)	60.0	60.0	60.0	60.0
Wind Speed Units	miles/hour	miles/hour	miles/hour	miles/hour
Meteorological Data File Names	PI93.met, PI94.met, PI95.met, PI96.met, PI97.met	PI93.met, PI94.met, PI95.met, PI96.met, PI97.met	PI93.met, PI94.met, PI95.met, PI96.met, PI97.met	PI93.met, PI94.met, PI95.met, PI96.met, PI97.met
Source Parameters				
Release Type	Ground	Ground	Ground	Ground
Release Height	28	28	28	28
Building Area	2176	2176	2176	2176
Vertical Velocity (m/sec)	0.0	0.0	0.0	0.0
Stack Flow (m^3/sec)	0.0	0.0	0.0	0.0
Stack Radius (m)	0.0	0.0	0.0	0.0
Initial Diffusion Coefficients σ_y, σ_z (m)	0.4, 0.0	0.4, 0.0	0.4, 0.0	0.4, 0.0
Receptor Parameters				
Distance to Receptor (m)	53.2	12.8	70.1	48.7
Intake Height (m)	25	25	25	25
Elevation Difference (m)	0	0	0	0
Direction to Source (deg az)	253	129	221	160
Default Information				
Surface Roughness Length (m)	0.20	0.20	0.20	0.20
Wind Direction Window (deg az)	90	90	90	90
Minimum Wind Speed (m/sec)	0.5	0.5	0.5	0.5
Averaging Sector Width Constant	4.3	4.3	4.3	4.3

Table 3.1-11
PINGP Summary of χ/Q Values

Source	Receptor	χ/Q (sec/m³)				
		(0 – 2 hour)	(2 – 8 hour)	(8 – 24 hour)	(1 – 4 days	(4 – 30 days)
Unit 1 Shield Bldg Vent Stack	121 CR Vent Intake	3.76E-03	3.23E-03	1.43E-03	1.00E-03	7.53E-04
	122 CR Vent Intake	8.33E-04	6.81E-04	2.99E-04	2.06E-04	1.59E-04
Unit 2 Shield Bldg Vent Stack	121 CR Vent Intake	1.23E-03	9.29E-04	3.76E-04	2.66E-04	2.27E-04
	122 CR Vent Intake	4.53E-03	3.93E-03	1.73E-03	1.22E-03	9.16E-04
Unit 1 Aux Bldg Normal Vent Make-Up Air Intake	121 CR Vent Intake	6.72E-03	5.21E-03	2.31E-03	1.52E-03	1.21E-03
	122 CR Vent Intake	6.33E-04	5.16E-04	2.26E-04	1.50E-04	1.19E-04
Unit 2 Aux Bldg Normal Vent Make-Up Air Intake	121 CR Vent Intake	9.93E-04	7.92E-04	3.48E-04	2.30E-04	1.83E-04
	122 CR Vent Intake	2.53E-02	2.13E-02	9.65E-03	7.14E-03	6.15E-03
Unit 1 SB Vent Stack	TSC Vent Intake	7.21E-04	6.28E-04	2.83E-04	1.99E-04	1.55E-04
Unit 2 SB Vent Stack		1.13E-03	7.51E-04	3.05E-04	1.91E-04	1.45E-04
Unit 1 Aux Bldg Normal Vent Make-Up Air Intake	TSC Vent Intake	7.92E-04	6.87E-04	3.08E-04	2.10E-04	1.65E-04
Unit 2 Aux Bldg Normal Vent Make-Up Air Intake		2.15E-03	1.12E-03	4.33E-04	3.04E-04	2.40E-04
Common Area of Aux Bldg	121 CR Vent Intake	6.71E-03	2.89E-03	1.22E-03	9.21E-04	7.44E-04
	122 CR Vent Intake	4.79E-03	3.60E-03	1.60E-03	1.21E-03	9.55E-04
Unit 1 TDAFWP Steam Exhaust	121 CR Vent Intake	4.66E-02	3.62E-02	1.55E-02	1.12E-02	9.95E-03
	122 CR Vent Intake	2.12E-03	1.63E-03	7.10E-04	4.79E-04	3.84E-04
Unit 2 TDAFWP Steam Exhaust	121 CR Vent Intake	3.60E-03	2.88E-03	1.24E-03	8.86E-04	7.85E-04
	122 CR Vent Intake	9.89E-03	7.51E-03	3.29E-03	2.23E-03	1.73E-03

Source	Receptor	χ/Q (sec/m³)				
		(0 – 2 hour)	(2 – 8 hour)	(8 – 24 hour)	(1 – 4 days_	(4 – 30 days)
Unit 1 MSSVs/ PORVs – Group 1	121 CR Vent Intake	1.87E-02	1.31E-02	5.51E-03	3.52E-03	2.76E-03
	122 CR Vent Intake	1.34E-03	1.07E-03	4.61E-04	3.27E-04	2.54E-04
Unit 1 MSSVs/ PORVs – Group 2	121 CR Vent Intake	1.89E-03	1.35E-03	5.33E-04	3.54E-04	2.75E-04
	122 CR Vent Intake	1.11E-03	9.17E-04	4.18E-04	2.88E-04	2.26E-04
Unit 2 MSSVs/ PORVs – Group 1	121 CR Vent Intake	2.01E-03	1.46E-03	6.16E-04	4.29E-04	3.63E-04
	122 CR Vent Intake	3.06E-02	2.46E-02	1.11E-02	7.76E-03	6.14E-03
Unit 2 MSSVs/ PORVs – Group 2	121 CR Vent Intake	1.10E-03	5.22E-04	2.13E-04	1.52E-04	1.19E-04
	122 CR Vent Intake	2.47E-03	1.97E-03	8.76E-04	5.62E-04	4.32E-04

Table 3.1-12
PINGP Summary of χ/Q Values Used in AST Analyses
(Limiting Values from Table 3.1-11)

Source	Receptor	χ/Q (sec/m³)				
		(0 – 2 hour)	(2 – 8 hour)	(8 – 24 hour)	(1 – 4 days)	(4 – 30 days)
Unit 2 Shield Bldg Vent Stack	122 CR Vent Intake	4.53E-03	3.93E-03	1.73E-03	1.22E-03	9.16E-04
Unit 2 Aux Bldg Normal Vent Make-Up Air Intake	122 CR Vent Intake	2.53E-02	2.13E-02	9.65E-03	7.14E-03	6.15E-03
Unit 2 SB Vent Stack	TSC Vent Intake	1.13E-03	7.51E-04	3.05E-04	1.91E-04	1.45E-04
Unit 2 Aux Bldg Normal Vent Make-Up Air Intake	TSC Vent Intake	2.15E-03	1.12E-03	4.33E-04	3.04E-04	2.40E-04
Common Area of Aux Bldg	121 CR Vent Intake	6.71E-03	2.89E-03	1.22E-03	9.21E-04	7.44E-04
Unit 1 TDAFWP Steam Exhaust	121 CR Vent Intake	4.66E-02	3.62E-02	1.55E-02	1.12E-02	9.95E-03
Unit 2 TDAFWP Steam Exhaust	122 CR Vent Intake	9.89E-03	7.51E-03	3.29E-03	2.23E-03	1.73E-03
Unit 1 MSSVs/ PORVs – Group 1	121 CR Vent Intake	1.87E-02	1.31E-02	5.51E-03	3.52E-03	2.76E-03
Unit 1 MSSVs/ PORVs – Group 2	121 CR Vent Intake	1.89E-03	1.35E-03	5.33E-04	3.54E-04	2.75E-04
Unit 2 MSSVs/ PORVs – Group 1	122 CR Vent Intake	3.06E-02	2.46E-02	1.11E-02	7.76E-03	6.14E-03
Unit 2 MSSVs/ PORVs – Group 2	122 CR Vent Intake	2.47E-03	1.97E-03	8.76E-04	5.62E-04	4.32E-04

3.2 Analytical Models

The RADTRAD Code (Version 3.0.3, Reference 17) was used to determine offsite doses and doses to Control Room personnel.

No credit for personal protective equipment or prophylactic drugs is taken in the analyses.

3.2.1 Offsite Dose Analytical Model

The analytical equation for determining the offsite doses is described in Section 2.3.1 of NUREG/CR-6604 (Reference 17). The dose to the hypothetical individual is calculated using the specified χ/Qs and the concentration of each nuclide released during the exposure period. The air immersion and inhalation dose from each nuclide, n, in an environmental compartment is calculated using RADTRAD.

Regulatory Guide 1.183, Section 4.1, provides guidance to be used in determining the total effective dose equivalent (TEDE) for persons located at the exclusion area boundary (EAB) and at the outer boundary of the low population zone (LPZ). The applicability of this guidance to the PINGP AST radiological consequence analysis is discussed in the regulatory conformance tables (Attachment 4).

3.2.2 Control Room Analytical Model

3.2.2.1 Control Room Description

The PINGP control room envelope is located at elevation 735' within the Auxiliary Building approximately equidistant between Unit 1 and Unit 2. The control room envelope consists of the control room and the two mechanical equipment rooms (also referred to as the chiller rooms). The control room ventilation system is entirely located within the two mechanical equipment rooms, with the exception of the outside air supply. The outside air supply dampers are located at the envelope boundary. The mechanical equipment rooms are located directly above the control room at elevation 755'. The cable spreading room on the 715' elevation (directly below the control room) is not part of the control room envelope. There are no other ventilation systems that penetrate the control room envelope.

The emergency mode alignment is initiated either by a SI signal or a high radiation signal in the control room. The SI signal is almost immediate for the design bases large break LOCA or MSLB. Radiation detectors R-23 and R-24 provide the high radiation signal. Radiation monitors R-23 and R-24 are located to sense the radiation at the outlet of the ducting into the Control Room. Two redundant radiation monitors with control functions are located within the control room envelope. The radiation monitors (R-23 and R-24), are scintillation type detectors, safety related, and physically located within the Control Room. The

radiation monitors sensing lines penetrate the control room supply ductwork downstream of the control room HVAC filter unit inside of the Control Room at the supply plenum prior to distribution ductwork branching. A "high" signal from either detector will automatically switch the control room ventilation system from the normal mode of operation to the emergency mode. The descriptions of these modes are given in the following discussion.

Normal Mode

During normal operation one train is running and the other train is in standby. For the operating train, the air handler is operating and the clean-up fan would be in standby with no air flow through the Particulate, Absolute, Charcoal (PAC) filter. During normal operation, the operating train recirculates the control room air and draws in fresh air. This recirculation flow during normal system operation is not filtered; i.e., the Air Handler Unit roll filter is not credited in that the roll filter is only for normal operations and not credited for post accident mitigation. Air is exhausted from the Control Room Envelope at a rate equivalent to the quantity of fresh air brought in. The design flow rates are 10,000 cfm recirculation flow rate and 2000 cfm fresh air for a total air handler flow rate of 12,000 cfm. For the dose analysis, the normal recirculation flow rate is not used and, thus, is not an input. The normal recirculation flow is not modeled as it has no impact to the dose analysis. The input for normal operation in the dose analysis is the fresh air supply flow rate. An equivalent input is also included for the exhaust flow rate.

Emergency Mode

In response to a Safety Injection or high radiation signal, both trains of the CRSVS start and are automatically aligned to isolate the fresh air intake and exhaust, and start and align a portion of the recirculation air flow through the clean-up fan. The portion of the air that is drawn by the clean-up fan passes through a PAC filter that is credited in the dose analysis. In this alignment, the system is recirculating and filtering the control room atmosphere. To account for a single active failure, only one train of control room ventilation system is credited in the dose analysis. In the emergency mode, the clean-up fan is designed to provide 4000 cfm ± 10%. For the AST dose analysis, the lower bound for filtered air flow rate, 3600 cfm, results in the bounding dose consequence to the control room operator.

The Control Room HVAC model schematic is given by Figure 3.2-1. The mathematical model used to represent the system uses a single outside air intake and a filtered recirculation flow which mixes with part of the recirculating air in the Control Room Envelope. A summary of these parameters is presented in Table 3.2-1.

Figure 3.2-1
Control Room HVAC Model Schematic (Emergency Mode)

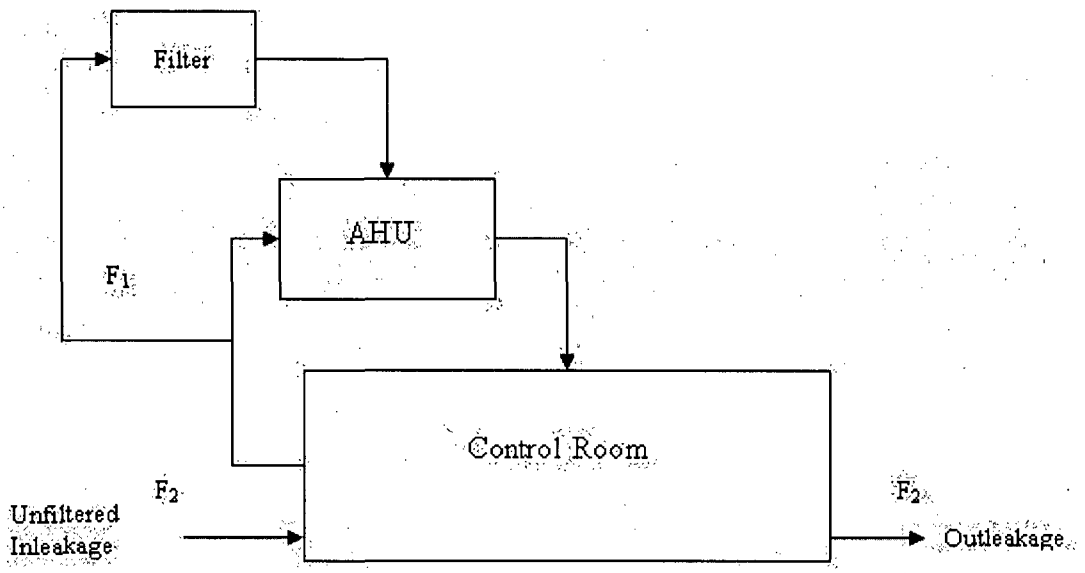

Dose to operators in the Control room are from two primary sources:

- Dose from airborne contaminants in the Control Room
- Dose from gamma sources outside the Control Room

These sources are discussed in the following sections.

3.2.2.1.1 Control Room Doses from Airborne Contaminants

For the purposes of the determining radiological consequences in the AST dose analysis, it is assumed that all inleakage to the control room is drawn in through the Control Room outside air intake. As discussed in Section 3.1.3, this is a conservative receptor location. In order to be drawn in through the outside air intake, the release needs to leak by the redundant bubble tight dampers.

To determine the dose to personnel in the control room, the RADTRAD code and the built-in control room model are used. The analytical equation for determining the control room dose is described in Section 2.3.2 of NUREG/CR-6604.

The air immersion and inhalation dose to a hypothetical individual in the control room is calculated based on the time-integrated concentration in the control room compartment in RADTRAD. The Murphy-Campe (Reference 17) geometric factor, G_F, relates the dose from an infinite cloud to the dose from a cloud of volume (V) as described in Section 2.3.2 of NUREG/CR-6604.

3.2.2.1.2 Control Room Doses from Gamma Shine

The gamma shine dose contribution to Control Room personnel consists of the following parts:

- Gamma shine from containment airborne activity
- Gamma shine from activity in the external radioactive cloud surrounding the plant structures
- Gamma shine from trapped activity on filters

The SB and ABSVS charcoal/HEPA filters are physically located on Auxiliary Building EL 755'0" in the vicinity of the containment centerline. The closest distance between the ABSVS charcoal filter and the control room is 79'-0". The distance between the SBVS charcoal filter and the control room is greater than the distance between the ABSVS charcoal filter and the control room. The concrete floor underneath these filters is 1'-0" thick. The relative distance and slant distance through the concrete floor and CR east wall would be such that the resulting dose from these charcoal filters becomes negligible.

Gamma shine from the containment airborne activity

The post-LOCA containment leakage activity confined in the containment dome air space above the operating floor can conceivably contribute to the direct shine dose to the CR operator (lower locations within the containment building are heavily self-shielded by the reactor cavity and steam generator enclosure structures). The containment steel cylinder wall is 1.5" thick and the SB concrete wall is 2'-6" thick. The CR concrete ceiling and Auxiliary Building roof are 2'0" and 1'-0" thick respectively at EL 755'-0" and at EL 775'-0". The direct shine from the post-LOCA activity confined above the containment operating floor to the CR operator encounters a slant line-of-sight path through the 1.5" of the containment steel, 2.5' of the SB concrete wall, 3.0' of the CR ceiling plus Auxiliary Building roof, and multiple other concrete roof and walls of the auxiliary building. The encountered concrete and steel barriers (at least 5.5' thick concrete, 1.5" steel) provide ample shielding to adequately shield the post-LOCA containment shine dose to the CR operator. This component of the CR operator dose can therefore be ignored.

Gamma shine from activity in the external cloud surrounding the plant structures

The post-LOCA radioactive plumes released from the shield building (SB) vent stack and auxiliary building (AB) air intake louvers contain the radioactive sources from the containment & ESF leakages. The RWST leakage dose contribution is extremely small; therefore, the radiation shine from the RWST radioactive plume is excluded from this analysis. The CR concrete shielding (walls & ceiling) directly exposed to the environment is reviewed to determine the minimum thickness of concrete shielding between the external cloud and the CR personnel. The CR walls are within the AB & TB and are further surrounded by other concrete walls in the AB and TB. The ceiling of the CR is 24" thick concrete, which is directly exposed to the radioactive cloud external to the CRE.

The CRE will be submerged in the post-LOCA radioactive plume and the CR operator will be exposed to gamma dose through the walls and roof. The RADTRAD3.03 code calculates the site boundary whole body gamma dose based on the semi-infinite cloud immersion. Therefore, the χ/Qs for the LPZ receptor modeled in RADTRAD model are modified by replacing them with the CR intake χ/Qs. The semi-infinite gamma dose calculated at the modified LPZ receptor actually represents the dose at the CR air intake location. Using the CR air intake χ/Qs in the model to represent the center of the CR is conservative because the CR air intake locations are closer to the leakage release points than the CR center.

The RADTRAD models for the containment leakage and for the ESF leakage are developed using the CR air intake χ/Qs to calculate the semi-infinite cloud gamma dose at the CR intake. The resulting gamma dose from the external cloud shine dose to a 6-foot tall CR operator standing on the floor of the Shift Supervisor's Office at EL 739'-2", provides the limiting location in the Control Room.

<u>Gamma shine from trapped activity on Control Room Charcoal and HEPA filters</u>
The CRSVS charcoal filter trains are located at EL 755', in the Mechanical Equipment Rooms (above the Control Room). The post-LOCA aerosol buildup on the HEPA filter and the iodine buildup on the charcoal filter are calculated as follows.

The RADTRAD3.03 code calculates the cumulative elemental and organic iodine atoms and the aerosol mass deposited on the CRSVS recirculation charcoal/HEPA filters. The CR recirculation filter iodine and aerosol activities are calculated for the containment leakage. The relationship between the iodine atom & aerosol mass and activity are established based on the information obtained from RADTRAD model. The elemental and organic iodine atoms collected on the CR recirculation filter are summed. Similarly, the total aerosol mass collected on the CR recirculation filter is also determined.

The post-LOCA ESF leakage consists of a non-aerosol iodine release (97% of the elemental iodine + 3% of the organic iodide); therefore, there is no aerosol mass deposited on the CRSVS HEPA filter. The total iodine (elemental + organic) atoms deposited on the CR charcoal filter is calculated.

The total iodine atom due to the containment and ESF leakages are combined and then converted into the isotopic iodine activities. Similarly, the total aerosol mass collected on the CRSVS recirculation filter is converted into aerosol isotopic activities.

The MicroShield geometric model is developed based the location of the charcoal filter at EL 755'-0", charcoal tray dimensions, and by conservatively positioning a 6 feet tall CR operator just below the charcoal bed in the CR

supervisor office in the CR. The charcoal trays are modeled with approximate dimensions of 24" (H) x 48" (W) x 30" (L) and placed on the CR ceiling with the CR operator standing right below the center of charcoal bed. The CRSVS charcoal filter shine dose to the CR operator is calculated using the MicroShield Computer Code. The 720-hrs direct dose from the CR filter shine is calculated using the CR occupancy factors and added to doses from other post-LOCA sources.

3.2.2.1.3 Assumptions and Inputs for Determining Radiological Consequences to Control Room:

Regulatory Guide 1.183, Section 4.2, provides guidance to be used in determining the total effective dose equivalent (TEDE) for persons located in the control room (CR). The applicability of the guidance in RG 1.183 to the PINGP AST radiological consequence analysis is discussed in the regulatory conformance tables in Attachment 4. Input parameters used in the modeling of the Control Room are shown in Table 3.2-1.

Table 3.2-1
Parameters Used in Modeling the Control Room

Parameter	Current Licensing Basis	Proposed AST	Justification for Change
Control Room Volume	61,315 ft^3	61,315 ft^3	No Change
Normal Mode Ventilation Flow Rates			
Filtered Makeup Flow Rate	0 cfm	0 cfm	No Change
Filtered Recirculation Flow Rate	0 cfm	0 cfm	No Change
Unfiltered Makeup Flow Rate	2000 cfm	2000 cfm	No Change
Emergency Mode Ventilation Flow Rates			
Filtered Makeup Flow Rate	0 cfm	0 cfm	No Change
Filtered Recirculation Flow Rate (F_1)	3600 cfm	3600 cfm	No Change

Parameter	Current Licensing Basis	Proposed AST	Justification for Change
Unfiltered Makeup Flow Rate	0 cfm	0 cfm	No Change
Unfiltered Inleakage (including 10 cfm for ingress and egress) (F_2)	175 cfm	250 / 300 cfm (See Section 3.2.2.2)	Demonstrated in design analyses
Filter Efficiencies			
Elemental	95%	95%	No Change
Organic	95%	95%	No Change
Particulate	99%	99%	No Change
CR Radiation Monitor Setpoint	< 1.0E-04 µCi/cc for Xe-133	< 1.0E-04 µCi/cc for Xe-133	No Change
CR Radiation Monitor Location (R-23 & R-24)	HVAC Duct downstream of filter	HVAC Duct downstream of filter	No Change
CR HVAC Emergency Mode Actuation Delay *	2 minutes	5 minutes	Conservative time delay based on accident release characteristics and radiation monitor setpoint.
Breathing Rate			
0 – 720 hr	3.47E-04 m^3/sec	3.5E-04 m^3/sec	Consistent with RG 1.183
Occupancy Factors			
0 - 24 hours	1.0	1.0	No Change
1 – 4 days	0.6	0.6	No Change
4 - 30 days	0.4	0.4	No Change
Control Room East, West and South Concrete Wall Thickness	2.0 feet	2.0 feet	No change
Control Room North Concrete Wall Thickness	1.5 feet	1.5 feet	No change
Minimum Concrete Thickness Between CR Charcoal Filter and CR Operator	2.0 feet	2.0 feet	No change
CRVS Charcoal Density	Modeled tray weight	0.5 g/cc	Values are consistent
CRVS Charcoal Tray Dimension	24" x 30" x 7.75" (2 across and 6 high)	24" x 30" x 7.75" (2 across and 6 high)	No change

* Time necessary to automatically align the CR HVAC from Normal Mode of operation to Emergency Mode, including delay time to reach the high radiation setpoint.

3.2.2.2 Control Room Envelope In-Leakage

Unfiltered inleakage to the control room envelope was determined using tracer gas testing techniques in 1998 and 2004. The results for total unfiltered inleakage to the control room envelope from the 1998 and 2004 testing are presented in Table 3.2-2.

Table 3.2-2
CRE Unfiltered Inleakage

Method of System Initiation	1998 Measured Inleakage Rate (cfm)	2004 Measured Inleakage Rate (cfm)
High Rad	160 ± 5	115 ± 36
SI	145 ± 5	114 ± 21

The testing results from 2004 are consistent with the testing results from 1998, indicating that the current maintenance and control practices have maintained the CRE boundary.

Different events may generate different initiating signals. For example, a LOCA or MSLB will most likely initiate a SI signal. A FHA will not initiate a SI signal; i.e., the Hi Rad Signal would be relied on. There is no difference in the alignment of the emergency configuration of the control room ventilation system in response to a High Rad versus a SI signal. However, the response of ventilation systems in spaces adjacent to the control room may be different for an event that initiates a SI signal versus an event that does not initiate a SI signal. The response of ventilation systems in the adjacent spaces affects the differential pressures across the control room envelope boundaries, which can affect the inleakage. This is accounted for by using inleakage values in the radiological consequence analysis that bound all of the testing results for possible system configurations.

The specific radiological dose consequence analyses assume either 250 cfm or 300 cfm (including the 10 cfm for ingress and egress) for unfiltered inleakage. As 240 cfm (250 cfm – 10 cfm) is the minimum value used in any of the radiological consequence analyses, this will be the maximum allowed unfiltered inleakage value. Each analysis (discussed in Sections 3.3 through 3.9) uses either 250 cfm or 300 cfm as the input value. The value used in each specific accident is identified in the input parameter table for that accident in Sections 3.3 through 3.9.

3.2.3 Technical Support Center (Analytical Model)

3.2.3.1 Technical Support Center Description

Normal HVAC Operation Alignment
During normal system operation, the system is operating on recirculation using the return fans. Fresh air is supplied through the normal outside air intake(s). The recirculation flow path using the return fans is not filtered. Air is exhausted from the TSC at a rate equivalent to the quantity of fresh air supplied. There is no air flow through the clean up and PAC filters. The design outside air supply flow is 1000 cfm. An equivalent value is used for the exhaust air flow rate.

Emergency (Post-Accident HVAC Alignment)
The system is manually realigned for the emergency mode. In the emergency mode, the return fan(s) are shut off, the normal outside air dampers are closed, the clean-up fan is started and the emergency outside air supply damper modulates to provide a preset flow rate to maintain a positive pressure in the TSC. The recirculation and emergency supply air is filtered through a PAC filter.

The TSC HVAC model schematic is given by Figure 3.2-2. The mathematical model used to represent the system uses a single filtered outside air intake and a filtered recirculation flow which mixes with part of the recirculating air in the TSC. A summary of these parameters is presented in Table 3.2-3.

Figure 3.2-2
TSC HVAC Model Schematic (Emergency Mode)

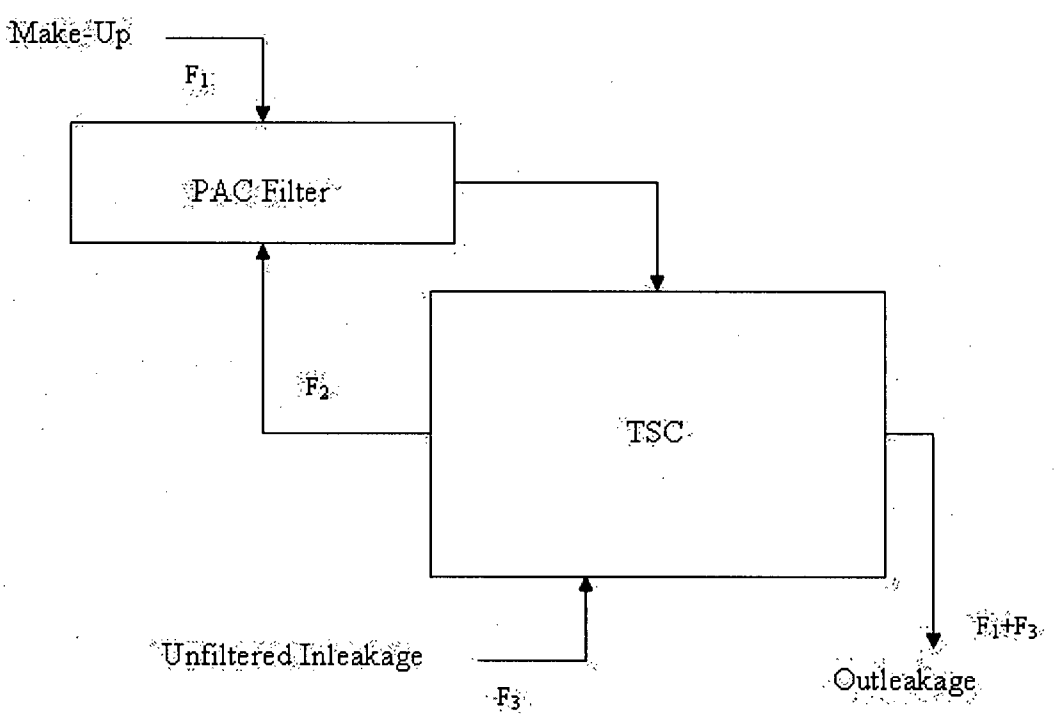

Dose to personnel in the TSC are from two main pathways:

- Dose from airborne contaminants in the TSC
- Dose from gamma sources outside the TSC

These sources are discussed in the following sections.

3.2.3.1.1 TSC Doses from Airborne Contaminants
Unfiltered inleakage and filtered make-up air are assumed to be drawn into the TSC outside air intake. No filtering is applied to the unfiltered inleakage. The atmospheric dispersion factors are discussed in Section 3.1.3.

3.2.3.1.2 TSC Doses from Gamma Shine
The gamma shine dose contribution to TSC personnel consists of the following parts:

- Gamma shine from containment airborne activity
- Gamma shine from activity in the external radioactive cloud surrounding the plant structures
- Gamma shine from trapped activity on filters

The SB and ABSVZ charcoal/HEPA filters are physically located on Auxiliary Building EL 755'0" in the vicinity of the containment centerline. Due to distance and shielding, gamma shine from the SBVS and ABSVS are not considered in the TSC dose analysis.

<u>Gamma shine from the containment airborne activity</u>
Only the post-LOCA containment leakage activity confined in the containment dome air space above the operating floor can conceivably contribute to the direct shine dose to the TSC operator (lower locations within the containment building are heavily self-shielded by the reactor cavity and steam generator enclosure structures). The radiation shine path from the containment upper hemispherical dome wall above El. 837'-0" to the TSC between Column Lines A and B and below El. 756'-4" is through the containment steel cylinder wall. The containment steel cylinder wall is 1.5" thick and the Shield Building (SB) concrete wall is 2'-6" thick. The TSC south wall is constructed with 12" filled concrete blocks with a minimum equivalent poured concrete thickness of 9". The TSC roof at elevation 756'-4" has a minimum equivalent poured concrete thickness of 4.75". The direct shine from the post-LOCA activity confined above the containment refueling floor to the TSC operator encounters slant line-of-sight path through the 1.5" of the containment steel, 2.5' of the SB concrete wall, and 9" of the TSC south wall. The MicroShield computer code is used to calculate the time dependent direct dose rates at the location of the TSC operator one (1) foot behind the 9" wall.

Gamma shine from activity in the external cloud surrounding the plant structures
The post-LOCA radioactive plumes released from the Shield Building (SB) vent stack and Auxiliary Building (AB) air intake louvers contain the radioactive sources from the containment & ESF leakage. The RWST leakage dose The minimum TSC shielding is provided by the 12" concrete block walls (3 inches equivalent poured concrete) which are directly exposed to the radioactive cloud external to the TSC. The TSC will be submerged in the post-LOCA radioactive plume and the TSC operator will be exposed to gamma dose through the walls and roof.

Gamma shine from trapped activity on TSC Charcoal and HEPA filters
The TSC charcoal filter train is located at EL 756'-4", on the roof of TSC. The buildup of the post-LOCA aerosol on the HEPA filter and the iodine on the charcoal filter are calculated. The RADTRAD3.03 code is used to calculate the cumulative elemental and organic iodine atoms and the aerosol mass deposited on the TSC recirculation charcoal/HEPA filters. The MicroShield geometric model is developed based the location of charcoal filter at EL 756'-4", charcoal tray dimensions, and by positioning a representative 6 foot tall TSC occupant in an area normally occupied in the TSC Command Center. The charcoal/HEPA filter are conservatively modeled as stacked 9 trays high, 1 tray wide, with overall dimensions of 56.53" (H) x 24" (W) x 27.75" (L) The filter is placed above the TSC ceiling with the representative TSC occupant standing directly below the center of the charcoal bed. To conservatively estimate the filter shine dose, the TSC occupant is exposed for 30 days to the total cumulative isotopic (iodine and aerosol) activity collected on the filters during the entire 30 day event assuming that this activity were present on the filter starting from time T = 0 hr.

3.2.3.1.3 Assumptions and Inputs for Determining Radiological Consequences to TSC:

To determine the dose to personnel in the TSC, RADTRAD is used with the control room node used as the TSC. Regulatory Guide 1.183, Section 4.2, provides guidance to be used in determining the total effective dose equivalent (TEDE) for persons located in the TSC. Input parameters used in the modeling of the TSC are shown in Table 3.2-3. The TSC HVAC system is a non-safety system. Single failures are not considered as part of the analysis.

Table 3.2-3
Parameters Used in Modeling the TSC

Parameter	AST
Free Air Volume	18,900 ft^3
Normal Mode Ventilation Flow Rates	
Filtered Makeup Flow Rate	0 cfm
Filtered Recirculation Flow Rate	0 cfm
Unfiltered Makeup Flow Rate	1,000 cfm
Emergency Mode Ventilation Flow Rates	
Filtered Makeup Flow Rate (F_1)	1320 cfm
Filtered Recirculation Flow Rate (F_2)	1620 cfm
Unfiltered Makeup Flow Rate	0 cfm
Unfiltered Inleakage (including 10 cfm for ingress and egress) (F_3)	50 cfm
Filter Efficiencies	
Elemental	90%
Organic	90%
Particulate	95%
TSC HVAC Emergency Mode Actuation Delay *	30 minutes
Breathing Rate	
0 – 720 hr	3.5E-04 m^3/sec
Occupancy Factors	
0 - 24 hours	1.0
1 – 4 days	0.6
4 - 30 days	0.4

* This is the assumed time necessary to manually align the TSC HVAC from Normal Mode of operation to Emergency Mode, including delay time to reach the high radiation setpoint. Per procedures, the TSC HVAC Emergency Mode is manually initiated when the TSC is activated.

3.2.4 Radiological Source Terms

3.2.4.1 Dose Conversion Parameters and Physical Parameters

The AST DCFs for external exposure (EDE) and inhalation (CEDE) are from the Federal Guidance Report No. 12, "External Exposure to Radionuclides in Air, Water, and Soil" (Reference 19) and the Federal Guidance Report No. 11, "Limiting Values of Radionuclide Intake and Air Concentration and Dose Conversion Factors for Inhalation, Submersion, and Ingestion," respectively (Reference 20).

The DCFs used in the MSLB, SGTR, CREA, and LRA analyses are presented in Table 3.2-7. The CLB DCFs are based on Table 2.1 of Reference 20 for determining thyroid dose at the exclusion area boundary, low population zone and control room

The LOCA and FHA analyses use the default RADTRAD isotopic data and progeny data (Reference 17, Table 1.4.3.2-2). For the isotopes of interest for the MSLB, SGTR, CREA, and LRA analyses the half life data is from Reference 17. The progeny and decay fractions are from RADTRAD (Reference 17, Table 1.4.3.2-2).

3.2.4.2 Reactor Core Source Terms

The basic source terms used in the AST are the same as those used in the Current Licensing Basis for the reactor core and the reactor coolant system. The inventory of fission products in the PINGP reactor core were provided by Westinghouse using current licensing basis methodology and based on maximum full-power operation at a power level equal to the current licensed rated thermal power including a 2% margin for power uncertainty, and current licensed values of fuel enrichment and burnup. With the 2% uncertainty, the core inventory was determined based on a thermal power of 1683 MWt.

The core inventory utilized in the AST analysis reflects the higher reactor core isotopic inventories between the OFA fuel and the Heavy Bundle Fuel (HBF). For AST, the core inventory was increased by 10% above the 1683 MWt (i.e., 1852 MWt) to allow for power uprates in future PINGP licensing actions.

The ORIGEN-S, Version 2.0, code was used to calculate plant-specific fission product inventories for use in the dose analyses. The assumed period of irradiation was sufficient (> 630 EFPD) to allow the activity of dose-significant radionuclides to reach equilibrium or to reach maximum values.

Table 3.2-5 shows the core inventory at a thermal power level of 1683 MWt. In addition, the Ci/MWt is also shown.. As will be discussed in the applicable radiological consequence dose analyses, the Ci/MWt is used as input. The

source term (in Ci/MWt) is multiplied by the assumed power level (1852 MWt) in the RADTRAD computer code to input a source term at 1852 MWt.

Table 3.2-5
Core Radionuclide Inventory

Nuclide	Core Inventory (Ci) at 1683 MWt	RADTRAD Nuclide Inventory File (Ci/MWt)
Kr-85	7.15E+05	4.248E+02
Kr-85m	1.08E+07	6.417E+03
Kr-87	2.12E+07	1.260E+04
Kr-88	2.82E+07	1.676E+04
Xe-133	9.15E+07	5.437E+04
Xe-135	2.07E+07	1.230E+04
I-131	4.50E+07	2.674E+04
I-132	6.51E+07	3.868E+04
I-133	9.13E+07	5.425E+04
I-134	1.02E+08	6.061E+04
I-135	8.72E+07	5.181E+04
Cs-134	1.49E+07	8.853E+03
Cs-136	3.12E+06	1.854E+03
Cs-137	7.88E+06	4.682E+03
Rb-86	1.32E+05	7.843E+01
Y-90	5.99E+06	3.559E+03
Y-91	5.34E+07	3.173E+04
Y-92	5.49E+07	3.262E+04
Y-93	6.28E+07	3.731E+04
Zr-95	7.50E+07	4.456E+04
Zr-97	7.49E+07	4.450E+04
Nb-95	7.64E+07	4.540E+04
Mo-99	8.31E+07	4.938E+04
Te-127	4.21E+06	2.501E+03
Te-127M	7.36E+05	4.373E+02
Te-129	1.22E+07	7.249E+03
Te-129M	2.35E+06	1.396E+03
Te-131M	8.90E+06	5.288E+03
Te-132	6.35E+07	3.773E+04
Sb-127	4.26E+06	2.531E+03
Sb-129	1.30E+07	7.724E+03
Sr-89	3.98E+07	2.365E+04
Sr-90	5.71E+06	3.393E+03
Sr-91	5.02E+07	2.983E+04
Sr-92	5.43E+07	3.226E+04
Ba-139	8.06E+07	4.789E+04
Ba-140	7.73E+07	4.593E+04
Ru-103	7.40E+07	4.397E+04
Ru-105	5.26E+07	3.125E+04
Ru-106	3.08E+07	1.830E+04

Nuclide	Core Inventory (Ci) at 1683 MWt	RADTRAD Nuclide Inventory File (Ci/MWt)
Rh-105	4.94E+07	2.935E+04
Tc-99M	7.31E+07	4.343E+04
Ce-141	7.39E+07	4.391E+04
Ce-143	6.76E+07	4.017E+04
Ce-144	6.25E+07	3.714E+04
Pu-238	2.48E+05	1.474E+02
Pu-239	1.45E+04	8.616E+00
Pu-240	2.33E+04	1.384E+01
Pu-241	6.32E+06	3.755E+03
Np-239	9.08E+08	5.395E+05
La-140	8.13E+07	4.831E+04
La-141	7.26E+07	4.314E+04
La-142	6.99E+07	4.153E+04
Nd-147	2.89E+07	1.717E+04
Pr-143	6.71E+07	3.987E+04
Am-241	6.54E+03	3.886E+00
Cm-242	2.79E+06	1.658E+03
Cm-244	6.13E+05	3.642E+02
Co-58	*	2.553E+02
Co-60	*	1.953E+02

* Co-58 and Co-60 activities are obtained from RADTRAD User's Manual, NUREG/CR-6604 (Reference 17), Table 1.4.3.2-2.

The non-LOCA design bases analyses use the Departure from Nucleate Boiling Ratio (DNBR) as a fuel damage criterion.

3.2.4.2.1 Peak Pin Evaluation for non-LOCA Fuel Gap Inventory

Regulatory Guide 1.183, Table 3, specifies Fission Product gap inventories for non-LOCA events. Footnote (11) to Table 3 reads:

> The release fractions listed here have been determined to be acceptable for use with currently approved LWR fuel with a peak burnup up to 62,000 MWD/MTU provided that the maximum linear heat generation rate does not exceed 6.3 kw/ft peak rod average power for burnups exceeding 54 GWD/MTU. As an alternative, fission product gas release calculations performed using NRC approved methodologies may be considered on a case-by-case basis. To be acceptable, these calculations must use a projected power history that will bound the limiting projected plant-specific power history for the specific fuel load. For the BWR rod drop accident and the PWR rod ejection accident, the gap fractions are assumed to be 10% for iodines and noble gases.

As described in license amendment request, dated January 20, 2004 and approved by the NRC staff as part of license amendment 166 (Unit 1) and 156 (Unit 2) (References 12 and 13), the PINGP fuel management program can

result in some fuel assemblies being exposed to a maximum linear heat generation rate (LHGR) that exceeds 6.3 kw/ft at fuel burn-ups between 54 and 62 GWD/MTU. Thus, to account for the higher LHGR a site specific analysis was conducted. A computer code developed by Fauske and Associates, Inc., referred to as GAP, was used to perform the site specific gap fraction analysis. The GAP code was developed and qualified as a safety related computer code. The GAP code implements the gap fractional release methodology presented in ANSI/ANS-5.4-1982, "American National Standard Method for Calculating the Fractional Release of Volatile Fission Products from Oxide Fuel." The nodal input data to GAP for the temperature and specific power distribution as a function of burnup were developed with the Westinghouse PAD 4.0 code based on bounding power histories.

The GAP code is used to determine the gap release fractions for the short-lived and long-lived radionuclides. Both the ANS-5.4-1982 low-temperature and high-temperature release models are used. The bounding value as obtained for either release model is selected for the final result. These specific gap release fractions were then compared to the gap release fractions provided in Table 3 of Regulatory Guide 1.183. The bounding values between the regulatory value and the specific value are then used in the FHA dose analysis. The comparison of the results is shown in Table 3.2-6.

Table 3.2-6
Comparison of Gap Fractional Releases for PINGP Fuel Rods to Regulatory Guide 1.183, Table 3

Radionuclide or Radionuclide Group	Fractional Release	
	Bounding PINGP Result	Regulatory Guide 1.183, Table 3
I-131	0.036	0.08
Kr-85	0.056	0.10
Other Noble Gases	0.024	0.05
Other Halogens	0.013	0.05
Alkali Metals	0.072	0.12

In the NRC SER for License Amendment 166 (Unit 1), 156 (Unit 2), (Reference 12) the NRC determined that the GAP code was an acceptable method for determining gap fractions.

> To calculate the gap release fraction of alternate source term, the NRC staff considers acceptable the use of approved methodologies and bounding power histories. The NRC staff endorses the American National Standards Institute / American Nuclear Society-5.4-1982 model, entitled "American National Standard Method for Calculating the Fractional Release of Volatile Fission Product from Oxide Fuel," as an acceptable gap fractional release model. Based on this model, Fauske and

Associates, Inc. developed the computer code, GAP, to perform the calculation.

The temperature and power input data for the GAP code are acquired using the approved Westinghouse PAD fuel performance code based on bounding power histories. The GAP code analyses include short-lived and long-lived radionuclides, and low-temperature and high-temperature releases. A bounding value is then chosen for the final release result. The NRC staff reviewed the GAP code and determined that the analytical approach is consistent with the ANSI/ANS-5.4-1982 model. Therefore, the NRC staff concludes that the GAP code is acceptable for analyzing the gap release fraction.

As shown in Table 3.2-6, the GAP code predicts that in all cases, the fractions in Table 3 of Regulatory Guide 1.183 are bounding. As part of the full scope AST analyses, it was confirmed that PINGP is bounded by the gap release fractions in Regulatory Guide 1.183, Table 3. Therefore, the non-LOCA gap fractions in Table 3 of Regulatory Guide 1.183 are used in the AST radiological consequence analysis for the Fuel Handling Accident and the Locked Rotor Accident.

3.2.4.3 Dose Equivalent I-131 and Coolant Activity

Coolant activity limits are specified in terms of dose equivalent (DE) I-131. This is the I-131 concentration that would provide the same dose response as the combined concentration of all iodine isotopes in the coolant. Thyroid dose response is used as the measure of equivalency; and the actual isotopic concentrations representing an equivalent concentration of DE I-131. The iodine isotopic dose conversion factors provided in Table 3.2-7 are used in the analysis.

Table 3.2-7
Iodine Isotopic Thyroid Dose Conversion Factors

Isotope	Isotopic Dose Conversion Factor (Sv/Bq) (1)	Conversion Factor (rem/Ci/Sv/Bq)	Iodine Dose Conversion Factor (rem/Ci)
I-131	2.92E-07	3.70E+12	1.08E+06
I-132	1.74E-09	3.70E+12	6.44E+03
I-133	4.86E-08	3.70E+12	1.80E+05
I-134	2.88E-10	3.70E+12	1.07E+03
I-135	8.46E-09	3.70E+12	3.13E+04

(1) FGR-11 (Reference 20)

3.2.4.4 Reactor Coolant Source Terms

As discussed later in the associated analyses sections, the Reactor Coolant System source term (in Ci) is divided by the associated power level (1683 MWt) to determine a Ci/MWt. The Ci/MWt source term is then multiplied by the assumed power level (1852 MWt) in the RADTRAD computer code to input a source term at 1852 MWt.

3.2.4.4.1 RCS at 1% Failed Fuel

The Reactor Coolant System source terms for 1% failed fuel are presented in Table 3.2-8 at 1683 MWt.

Table 3.2-8
Comparison of CLB and AST Reactor Coolant Source Concentrations @ 1% Failed Fuel (µCi/gm)

Isotope	CLB	AST	% Change from CLB
I-131	3.27E-01	3.891E-01	19.0%
I-132	3.60E-01	4.272E-01	18.7%
I-133	4.98E-01	5.920E-01	18.9%
I-134	7.45E-02	8.880E-02	19.2%
I-135	2.86E-01	3.357E-01	17.4%
Kr-83m	5.05E-02	3.92E-01	676.2%
Kr-85m	2.04E-01	1.59E+00	679.4%
Kr-85	1.40E+00	1.09E+01	678.6%
Kr-87	1.32E-01	1.03E+00	680.3%
Kr-88	3.71E-01	2.89E+00	679.0%
Xe-131m	2.63E-01	2.05E+00	679.5%
Xe-133m	4.69E-01	3.65E+00	678.3%
Xe-133	3.34E+01	2.60E+02	678.4%
Xe-135m	6.45E-02	5.02E-01	678.3%
Xe-135	1.06E+00	8.24E+00	677.4%
Xe-138	7.80E-02	6.09E-01	680.8%

Noble gas concentrations in CLB are based on 100/E-Bar definition. Noble gas concentrations for AST are based on DE XE-133 definition.

Based on the isotopic concentrations a total RCS activity is determined by multiplying the concentration by the mass of the RCS. The mass of the RCS is determined based on cold water temperature conditions (ρ = 62.4 lbm/ft^3). The total RCS activities for the concentrations shown in Table 3.2-8 is provided in Table 3.2-9 for 1683 MWt.

Table 3.2-9
Total RCS Activity Considered in Analysis

Isotope	AST (µCi/gm)	RCS Mass (gm)	RCS Activity(Ci)
I-131	3.891E-01	1.497E+08	5.825E+01
I-132	4.272E-01	1.497E+08	6.395E+01
I-133	5.920E-01	1.497E+08	8.862E+01
I-134	8.880E-02	1.497E+08	1.329E+01
I-135	3.357E-01	1.497E+08	5.025E+01
Kr-83m	3.92E-01	1.497E+08	5.868E+01
Kr-85m	1.59E+00	1.497E+08	2.380E+02
Kr-85	1.09E+01	1.497E+08	1.632E+03
Kr-87	1.03E+00	1.497E+08	1.542E+02
Kr-88	2.89E+00	1.497E+08	4.326E+02
Xe-131m	2.05E+00	1.497E+08	3.069E+02
Xe-133m	3.65E+00	1.497E+08	5.464E+02
Xe-133	2.60E+02	1.497E+08	3.892E+04
Xe-135m	5.02E-01	1.497E+08	7.515E+01
Xe-135	8.24E+00	1.497E+08	1.234E+03
Xe-138	6.09E-01	1.497E+08	9.117E+01

3.2.4.4.2 RCS Iodines at Normal Tech Spec Limit of 0.5 µCi/gm

The iodine concentrations at 1% failed fuel bound the concentrations for the normal Technical Specification limit of 0.5 µCi/gm DE I-131. The concentrations corresponding to the 1% failed fuel conditions are used.

3.2.4.4.3 RCS Iodines at Spiking Tech Spec Limit of 30 µCi/gm

For the pre-accident iodine spike, the initial iodine concentration is based on 30 µCi/gm DE I-131. The value of 30 µCi/gm DE I-131 is an increase by a factor of 60 above the Technical Specification limit of 0.5 µCi/gm DE I-131. For the pre-accident spike case, the curie concentration for each isotope considered (Table 3.2-8, above) is determined using the following relationship

$$IsotopeCuries = IsotopeConcentration(\mu Ci / gm) * RCSMass(gm) * 60$$

Based on a RCS mass of 1.497E+08 grams at cooled conditions (ρ = 62.4 lbm/ft^3), the total curies for each iodine isotope are shown in Table 3.2-10

Table 3.2-10
Total RCS Activity Considered in Analysis
For Pre-Accident Iodine Spike

Isotope	AST (μCi/gm)	RCS Mass (gm)	RCS Activity (Ci)
I-131	3.891E-01	1.497E+08	3.495E+03
I-132	4.272E-01	1.497E+08	3.837E+03
I-133	5.920E-01	1.497E+08	5.317E+03
I-134	8.880E-02	1.497E+08	7.976E+02
I-135	3.357E-01	1.497E+08	3.015E+03

3.2.4.4.4 RCS Cesium and Rubidium Concentrations

Cesium and rubidium (alkali metals) are not included in the non-LOCA radiological consequence analyses since they would have a negligible impact on the analysis results, primarily because the dose contribution from alkali metals is insignificant compared to the dose contribution from noble gases which are released directly to environment without hold-up in the steam generators (SGs). For SGs that are intact, the release of alkali metals is solely a function of SG moisture carryover (factor of 400 less than the noble gas release rate). In addition the alkali metals introduced in the intact SG are diluted within the SG secondary side. This factor combined with the much lower release rate, results in an alkali metal release rate that is many times less than the noble gas release rate. In a faulted SG (which has experienced dry out), the alkali metals are diluted within the empty SG volume of approximately 1700 ft^3 and then gradually released as the SG air volume is displaced at the primary to secondary leakage rate. The resulting alkali metal release rate is many times less than the noble gas release rate. In addition, the control room dose contribution from alkali metals is further minimized by their removal via the 99% efficient control room HEPA filter; i.e., reduces the alkali metal CR dose contribution by a factor of 100. Furthermore, the activity released contributes to the external dose (whole body – DDE) and internal dose (inhaled – CEDE). All alkali isotopes including the daughters are naturally beta emitters. Thus, these do not contribute to external dose. The inhaled dose conversion factors for the cesium and rubidium isotopes show that these are inherently low thyroid inhalation dose contributors. These dose characteristics combined with the extremely low fractional release and the CR filter efficiencies will result in inconsequential CR and off-site doses from the alkali metals.

3.2.4.5 Secondary System Source Terms

3.2.4.5.1 Secondary System Iodine Concentrations

The initial iodine concentration in the secondary systems is based on the Technical Specification limit of 0.1 μCi/gm DE I-131. The activity in the secondary side of the Steam Generators is determined based on the ratio of the

Technical Specification limit for the secondary side of the SGs to the Technical Specification limit for the RCS. This is represented by the following relationship

$$\text{Secondary Side Activity}\left(\frac{\mu Ci}{gm}\right) = \text{RCS Activity}\left(\frac{\mu Ci}{gm}\right) * \frac{0.1\,(\text{SG TS Limit})}{0.5\,(\text{RCS TS Limit})}$$

Based on the SG secondary side mass (determined at a liquid density = 62.4 lbm/ft^3) the total iodine activity in the secondary side of each Steam Generator is shown in Table 3.2-11.

Table 3.2-11
Total SG Secondary Side Activity Considered in Analysis

Isotope	0.50 μCi/gr DE I-131 (μCi/gm	CLB Secondary Coolant Conc. (μCi/gm)	AST Secondary Coolant Conc. (μCi/gm)	Coolant Mass in Secondary Side of Steam Generator (gm)	AST Secondary Side Activity (Ci)
I-131	3.891E-01	7.38E-02	7.78E-02	4.873E+07	3.792
I-132	4.272E-01	1.89E-02	8.54E-02	4.873E+07	4.164
I-133	5.920E-01	8.48E-02	1.18E-01	4.873E+07	5.770
I-134	8.880E-02	1.74E-03	1.78E-03	4.873E+07	0.865
I-135	3.357E-01	3.05E-02	6.71E-02	4.873E+07	3.271

3.2.5 Iodine Species Released from Steam Generators

For the applicable accidents, the release of iodines from the fuel (and RCS) is modeled in accordance with Regulatory Guide 1.183 (Appendix E, Section 4): 4.85% elemental iodine, 0.15% organic iodide, and 95% particulate iodine. Appendix E also states that the iodine release from the SG should be 97% elemental and 3% organic. This is a result of not releasing the particulates that comprise 95% of the RCS flow mixing into the bulk SG water.

The analysis for PINGP assumes that the particulate is retained in the SG secondary side fluid and that the release from the SG is 97% elemental iodine and 3% organic iodide.

3.3 Loss of Coolant Accident Radiological Assessment

The loss of coolant accident (LOCA) is a postulated rupture in the reactor coolant system that results in expulsion of the coolant to containment. Even though the Emergency Core Cooling System is designed to maintain cooling of the fuel assemblies in this event, the dose consequence analysis is performed assuming a significant release of the radionuclides from the fuel assemblies.

3.3.1 Methodology Overview

The LOCA is modeled as a release of nuclides from the reactor core into the containment building. Containment leakage can be to the Shield Building, through penetrations that bypass the Shield Building into the Auxiliary Building Special Ventilation Zone (ABSVZ), or through penetrations that bypass both the Shield Building and the Auxiliary Building Special Ventilation Zone.

The containment leakage rates used in the AST analyses are less than the leakage rates used in the CLB. These new reduced containment leakage rates are identified as changes to Technical Specifications in Section 2.0, above. It was necessary to reduce the containment leakage rates to ensure that the postulated dose consequences to the operators in the Control Room and personnel in the TSC were less than the limitations.

The analysis does not credit containment spray for reducing the amount of radionuclides available for leakage from the containment.

The radiological source term characteristics and release timing are based on the Alternative Source Term (AST) methodology in Regulatory Guide 1.183.

Atmospheric dispersion factors from Section 3.1, above, are used in this analysis.

Doses to the public at the Exclusion Area Boundary (EAB) and the Low Population Zone (LPZ), operators in the Control Room and personnel in the TSC are determined.

3.3.2 Radiological Dose Models

The RADTRAD 3.03 code was used to calculate the immersion and inhalation dose contributions to both the onsite and offsite radiological dose consequences. Models were developed for both the containment leakage and ECCS leakage cases. The RADTRAD models for DBA-LOCA are graphically presented on Figures 3.3-1 and 3.3-2. Table 3.3-1 describes the RADTRAD cases constructed for the LOCA analyses. All of these pathways are part of the CLB and are suitable for AST.

Table 3.3-1
RADTRAD Models for LOCA

Case Designators	Figure	Purpose
1	3.3-1	Containment Leakage
2	3.3-2	ESF leakage to ABSVZ and RWST leakage to environment

Figure 3.3-1
Analytical Flow Model for Containment Release
[L_1, L_2, and L_3 are defined in Section 3.3.6.1]

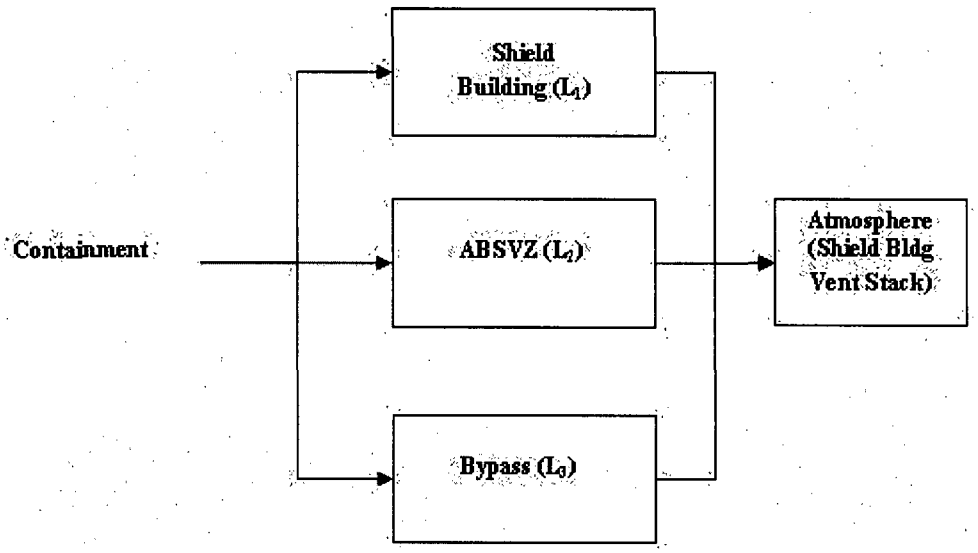

Figure 3.3-2
Analytical Flow Model for ESF & RWST Leakage Release

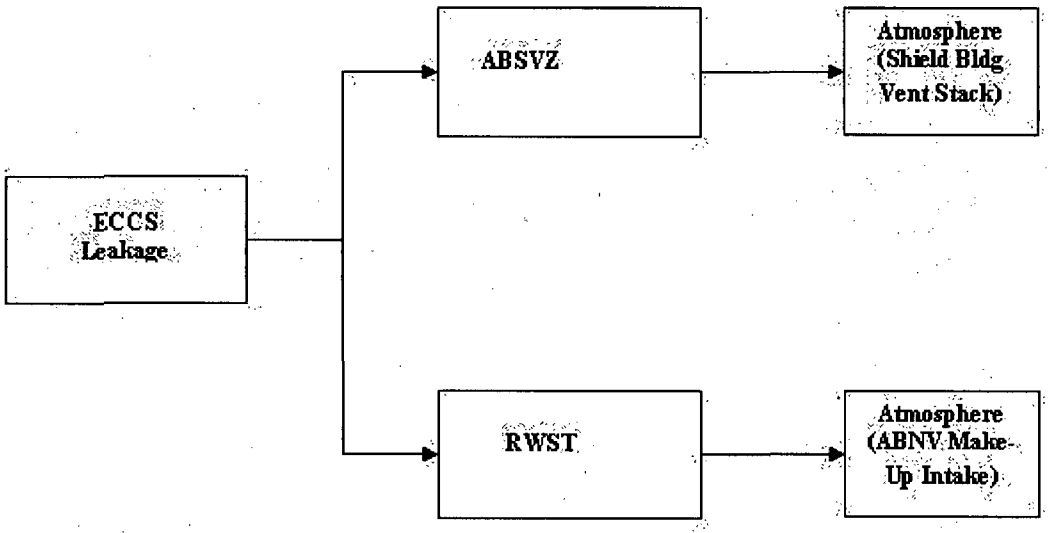

3.3.3 Radiological Source Term

The source term values shown in Table 3.2-5 are used in the post-LOCA dose consequence analysis. As shown in Table 3.2-5, for input to the RADTRAD computer code, the Curies (Ci) are divided by the thermal power level (1683 MWt); i.e., the input to RADTRAD is in terms of Ci/MWt. As previously discussed the AST radiological consequence analyses are based on a power level of 1852 MWt. In this case, the 1852 MWt is an input to RADTRAD. Thus, the source term input to RADTRAD is based on a power level of 1852 MWt.

3.3.4 Radiological Release Paths

3.3.4.1 Radiological Releases from Containment

The LOCA is modeled as a release of nuclides from the reactor core into the containment building. Releases from containment to the environment are assumed as follows:

- Total containment leakage is at the proposed Technical Specification allowable leakage rate of 0.15 weight % per day for the first 24 hours and one half that value after 24 hours. Containment leakage can be to the Shield Building, the Auxiliary Building Special Ventilation Zone or bypass both the Shield Building and the Auxiliary Building Special Ventilation Zone. The leakage contribution to each path is described below.

- Total leakage to the ABSVZ (L_2 on Figure 3.3-1) is at the proposed Technical Specification leakage rate of 0.06 weight % per day for the first 24 hours and one half that value after 24 hours.

- Total leakage that can bypass both the Shield Building and the ABSVZ (L_3 on Figure 3.3-1) is at the proposed Technical Specification leakage rate of 0.006 weight % per day for the first 24 hours and one half that value after 24 hours.

- Total leakage to the Shield Building (L_1 on Figure 3.3-1) is the difference between the total containment leakage rate and the leakage rates to the ABSVZ and bypass leakage for 0.084 weight % per day for the first 24 hours and one half that value after 24 hours.

The analysis does not credit containment spray for reducing the amount of radionuclides available for leakage from the containment. Consistent with Regulatory Guide 1.183, Appendix A, Section 3.2, natural deposition on containment surfaces of the elemental iodine release to containment is calculated using the methodology in NUREG-0800, Section 6.5.2 (Reference 21). The calculated natural deposition value, λ_w is 2.999 hr^{-1}. Using a maximum DF of elemental iodine of 200 (Reference 21), a time for terminating elemental iodine removal of 3 hours is used in the analysis.

Containment leakage to the Shield Building is treated by the Shield Building Ventilation system and released from the Shield Building Vent Stack. Containment leakage to the ABSVZ is treated by the Auxiliary Building Special Ventilation System and released from the Shield Building Vent Stack.

A small portion of the containment leakage could bypass both the Shield Building and the ABSVZ through the following containment penetrations:

- Instrument Air (1 penetration)
- RCS Sample Lines (3 penetrations)
- (Nitrogen Supply to Containment (2 penetrations)
- Fuel Transfer Tube (1 penetration)

The bypass leakage is conservatively assumed to be directly released as an unfiltered release through the Shield Building Vent Stack. Total bypass leakage is 0.055 cfm (0.006%/day * 1/100% * 1.32E+06 ft^3/1440 min/day). Using the Shield Building Vent Stack as the release path for the bypass leakage is conservative relative to the possible release locations based on the following discussion.

Instrument Air (1 Penetration)
The Instrument Air System compressors are located in the Auxiliary Feedwater Pump Rooms. Thus, leakage through the instrument air penetration could potentially escape into the Auxiliary Feedwater Pump rooms. The instrument air compressors normally maintain the air system at a pressure higher than post-accident containment pressure; however, compressor operation is not credited for mitigation of a LOCA. The relatively small bypass leakage will take a long time period to travel the instrument air lines before being exhausted to the AFW pump rooms and ultimately to the Turbine Building; where it would mix in the large volume of the Turbine Building and vent to the atmosphere through the Turbine Building exhaust louvers which are located farther from the CR air intakes than the Shield Building Vent Stack.

RCS Samples Lines (3 Penetrations)
Leakage through the RCS sample lines is into the Hot Chemistry Lab. These lines are normally water filled and have multiple valves closed in series. Therefore, bypass leakage through the RCS sample lines is not considered credible because the relatively small bypass leakage will not migrate beyond the first closed valve and will be diminished as it passes through the long liquid filled piping.

Nitrogen Supply to Containment (2 Penetrations)
Leakage through the nitrogen supply lines could potentially escape into the Nitrogen Gas House and be released directly to the environment. This system is

typically pressurized above post-accident containment pressure. The Gas House is located farther from the CR air intakes than the Shield Building Vent Stack.

Fuel Transfer Tube (1 Penetration)
Leakage through the fuel transfer tube would enter the Spent Fuel Pool liquid and be scrubbed as it escapes the pool. Tthe height of water above the fuel transfer tube is greater than 30 feet.

Therefore, assuming that the bypass leakage is released unfiltered from the Shield Building Vent Stack is conservative.

3.3.4.1.1 Containment Sump pH

An evaluation of containment sump liquid pH was performed to ensure that the particulate iodine deposited into the containment water during the DBA LOCA does not re-evolve beyond that recognized in the DBA LOCA analysis. Regulatory Guide 1.183, Appendix A, Section 2, states:

> If the sump or suppression pool pH is controlled at values of 7 or greater, the chemical form of radioiodine released to the containment should be assumed to be 95% cesium iodide (CsI), 4.85 percent elemental iodine, and 0.15 percent organic iodide. Iodine species, including those from iodine re-evolution, for sump or suppression pool pH values less than 7 will be evaluated on a case-by-case basis. Evaluations of pH should consider the effect of acids and bases created during the LOCA event; radiolysis products. With the exception of elemental and organic iodine and noble gases, fission products should be assumed to be in particulate form.

The objective of the sump pH analysis is to determine the transient containment sump pH so that the removal of elemental and particulate iodine (cesium iodide – CsI) from the containment atmosphere in the course of the DBA LOCA would not be overstated. The analysis credits the pH buffering effect of the addition of Sodium Hydroxide (NaOH) in the containment spray fluid during injection.

The pH of the containment sump water was determined using the MAAP-AST computer code – a code developed by Fauske and Associates that includes the capability to determine the pH of the liquid in the containment sump. The calculation methodology for containment sump pH control is based on determining the liquid pH, as a function of time, based on the various contributors to the sump liquid. Specifically, credit is taken for NaOH added to the containment water as a result of operation of the containment spray pump(s).

The design inputs were conservatively established to maximize the post-LOCA production of acids and to minimize the post-LOCA production and/or addition of bases.

In calculating the sump pH, the three major contributors to strong acid production are considered: boric acid from the reactor coolant system, the accumulators, and the refueling water storage tank (RWST); nitric acid from radiolysis of water; and, hydrochloric acid from radiolysis of chloride-bearing cable jacket/insulation.

Major assumptions used in the sump pH analysis are:

- Per the Technical Specifications, the caustic addition standpipe contains a minimum of 2590 gallons of NaOH at a minimum concentration of 9%. The minimum volume of NaOH injected was determined using hydraulic analysis techniques that resulted in the minimum volume injected from the standpipe. These techniques included using minimum containment spray pump flow, maximum system pressure losses, and minimum containment spray pump operating time.

- 100% of the cable insulation and jacket materials inside of containment are assumed to be chloride-bearing; i.e., capable of producing HCl. This is conservative as only a fraction of the cabling actually inside of containment is chloride-bearing.

- The amount of cable insulation in containment was determined from site data bases and cable properties. For conservatism it is assumed that the entire mass of the cable insulation and jacket materials inside of containment can create hydrochloric acid (HCl). This mass of cable insulation/jacket material was then increased by more than 100% to bound future modifications that may add cable to the containment building.

- Available quantities and concentrations of boric acid from the RCS, the RWST and the SI Accumulators were taken at their maximum values to maximize the amount of acid in the containment sump liquid.

The inputs for the pH evaluation are presented in Table 3.3-2

Table 3.3-2
Containment Sump Liquid pH Inputs

Input/Assumption	Input Parameter
RCS Mass	1.33E+05 kg
RCS Boron Concentration	2200 ppm
# of RWSTs	1
RWST Mass	1.11E+06 kg
RWST Boron Concentration	3500 ppm
# of SI Accumulators	2
SI Accumulator Mass (Each)	3.65E+04 kg
SI Accumulator Boron Concentration	3500 ppm
Mass of Hypalon (total cable insulation + jacketing increased by more than 100%)	10,000 lbm (4535 kg)
NaOH Mass Injected	569.5 kg

Rate of hydrochloric acid (HCl) production due to radiolytic decomposition of cable jacket and insulation material is determined based on information in NUREG/CR-5950 (Reference 22). Based on a radiation G value (generation rate as a function of incident radiation) for HYPALON of 2.1 molecules per 100eV of deposited energy, 4.6E-4 g-mole of HCl will be produced per pound of insulation per Megarad of radiation.

During post-LOCA mitigation, three volumes where liquid can collect are modeled in the MAAP-AST software:

- Reactor Cavity,
- Lower Compartment, and
- Annular Compartment.

The analysis determines the pH of the liquid in each of the volumes. The sump liquid pH results are shown in Figures 3.3-3 through 3.3-5, below. Tables 3.3-3 through 3.3-5 summarize the results for specific time periods for the water mass, CsI mass, CsOH mass, H_3BO_3 mass, NaOH mass, HNO_3 mass and pH.

Figure 3.3-3
Reactor Cavity pH

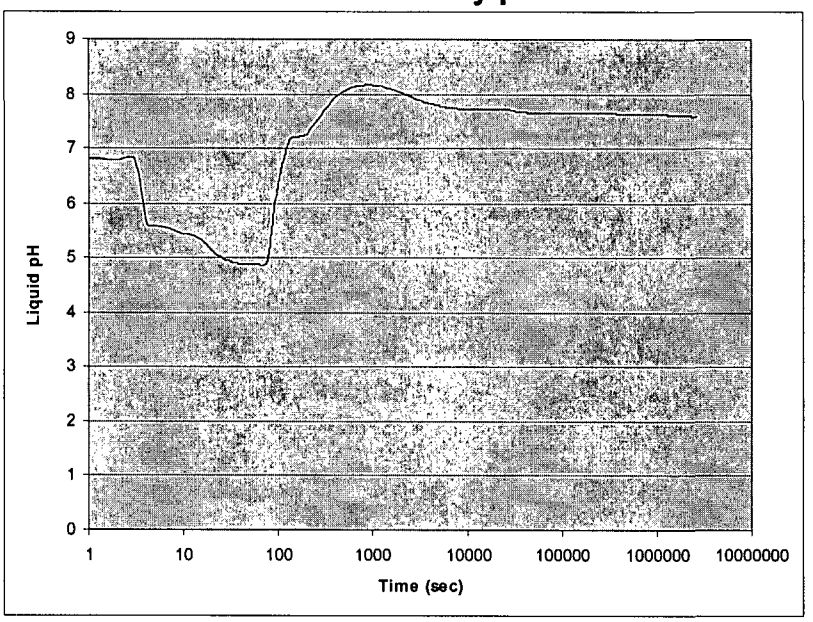

Figure 3.3-4
Lower Compartment pH

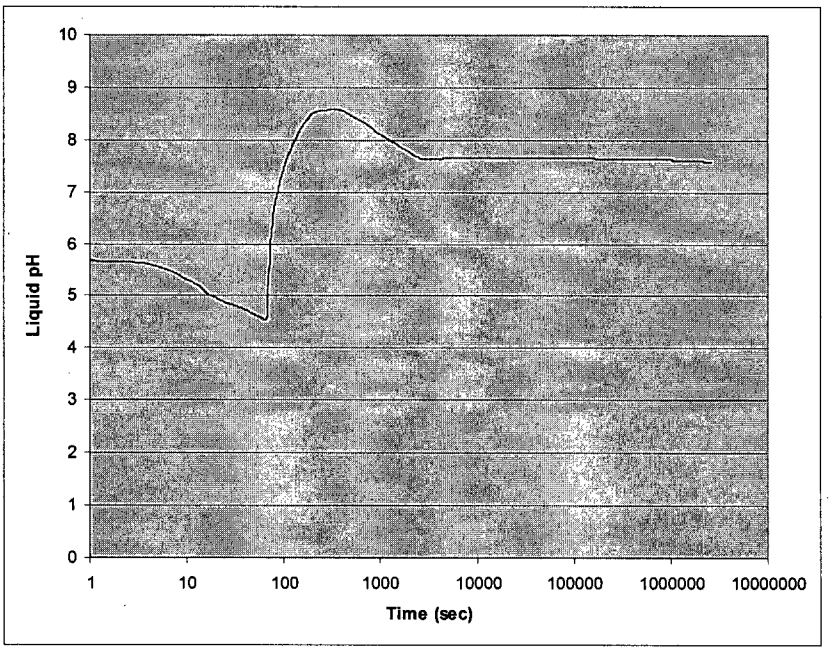

Figure 3.3-5
Annular Compartment pH

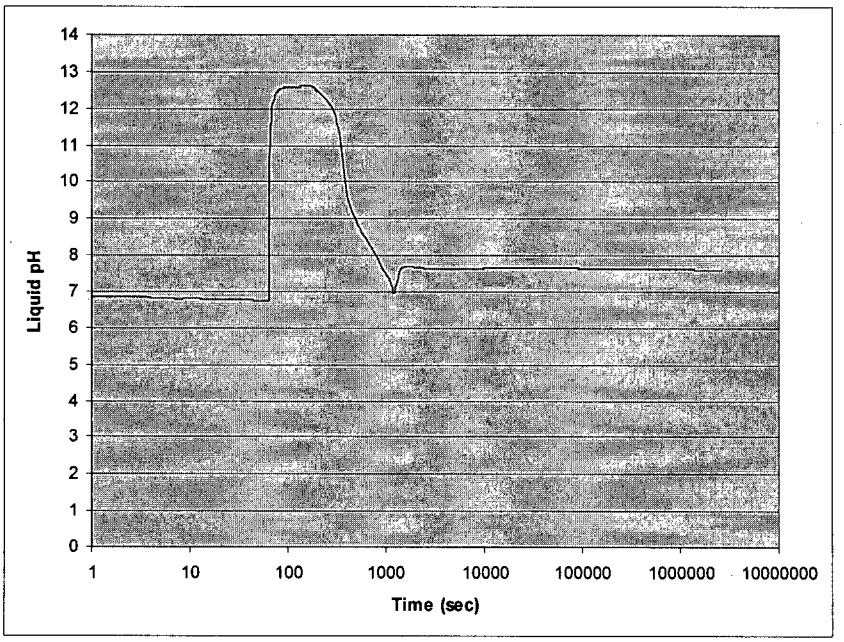

Table 3.3-3
pH Analysis Results – Reactor Cavity

Time (sec)	Water Mass (kg)	CsI Mass (kg)	CsOH Mass (kg)	H_3BO_3 Mass (kg)	NaOH Mass (kg)	HNO_3 Mass (kg)	pH
1.00E-03	0.00E+00	0.00E+00	0.00E+00	0.00E+00	0.00E+00	0.00E+00	7
1.006077	0.3464649	0.00E+00	0.00E+00	0.00E+00	0.00E+00	0.00E+00	6.800764
10.17184	7210.555	0.00E+00	0.00E+00	4.84E-07	0.00E+00	1.59E-03	5.44898
69.58074	76736.27	0.00E+00	0.00E+00	408.8795	3.21E-04	4.09E-02	4.872942
122.7396	95992.89	0.00E+00	0.00E+00	600.1326	3.443221	8.78E-02	7.001769
199.1046	100639.7	0.00E+00	0.00E+00	653.7427	6.570075	0.1019059	7.251055
400.0797	102987.1	0.00E+00	0.00E+00	768.556	34.83337	0.1393885	7.933468
906.6624	109195.3	9.14E-12	3.38E-02	1117.411	83.12196	0.2438468	8.171585
9986.332	118534.3	8.62E-10	2.428935	2084.619	59.1564	0.5383947	7.721487
100395.8	118333.3	1.22E-09	3.368301	2153.784	53.32369	2.302232	7.651141
1000252	119383.8	1.23E-09	3.396208	2190.576	54.23406	7.453655	7.622886
2000658	119556.6	1.23E-09	3.400915	2215.318	54.84655	11.54575	7.599616
2592000	119631.7	1.23E-09	3.403015	2229.484	55.19744	13.87405	7.586079

Table 3.3-4
pH Analysis Results – Lower Compartment

Time (sec)	Water Mass (kg)	CsI Mass (kg)	CsOH Mass (kg)	H_3BO_3 Mass (kg)	NaOH Mass (kg)	HNO_3 Mass (kg)	pH
1.00E-03	31.62891	0.00E+00	0.00E+00	0.00E+00	0.00E+00	0.00E+00	6.133412
1.006077	19674.45	0.00E+00	0.00E+00	0.00E+00	0.00E+00	2.14E-03	5.692223
10.17184	62644.63	0.00E+00	0.00E+00	4.35E-06	0.00E+00	2.01E-02	5.301948
69.58074	58958.98	0.00E+00	0.00E+00	499.9756	0.1387617	0.1072606	5.448465
122.7396	60746.31	0.00E+00	0.00E+00	670.0786	27.35578	0.1735921	7.885326
199.1046	89208.21	0.00E+00	0.00E+00	1189.793	168.6606	0.3221849	8.506423
400.0797	177861	0.00E+00	0.00E+00	2703.688	413.308	0.7127793	8.549552
906.6624	403361.5	2.76E-10	1.018582	6796.546	494.1077	1.687801	8.161498
9986.332	696329.9	7.67E-09	21.15918	12684.95	310.5057	4.078862	7.655042
100395.8	695838.2	7.16E-09	19.80689	12665.89	313.584	13.75296	7.650964
1000252	699370.7	7.19E-09	19.90677	12841.16	317.92	43.85094	7.622737
2000658	699935.9	7.19E-09	19.91355	12972.73	321.177	67.79276	7.599434
2592000	700495.8	7.20E-09	19.93587	13062.21	323.3936	81.45406	7.585907

Table 3.3-5
pH Analysis Results – Annular Compartment

Time (sec)	Water Mass (kg)	CsI Mass (kg)	CsOH Mass (kg)	H_3BO_3 Mass (kg)	NaOH Mass (kg)	HNO_3 Mass (kg)	pH
1.00E-03	0.00E+00	0.00E+00	0.00E+00	0.00E+00	0.00E+00	0.00E+00	7
1.006077	2.014529	0.00E+00	0.00E+00	0.00E+00	0.00E+00	0.00E+00	6.849633
10.17184	422.7022	0.00E+00	0.00E+00	0.00E+00	0.00E+00	0.00E+00	6.798655
69.58074	5918.188	0.00E+00	0.00E+00	6.277677	18.22544	0.00E+00	12.1673
122.7396	12220.8	0.00E+00	0.00E+00	93.02332	270.0666	0.00E+00	12.60261
199.1046	17202.12	0.00E+00	0.00E+00	181.7827	410.8521	0.00E+00	12.46737
400.0797	20044.66	0.00E+00	0.00E+00	284.0303	137.9984	0.00E+00	9.538172
906.6624	18611.71	0.00E+00	0.00E+00	338.3416	8.910088	0.00E+00	7.687849
9986.332	428571.5	4.20E-09	11.64859	7823.426	190.0403	2.174283	7.651693
100395.8	429000.1	4.41E-09	12.20611	7804.954	193.2361	8.357612	7.651155
1000252	423795	4.36E-09	12.05599	7775.983	192.517	26.43089	7.622933
2000658	422964.5	4.35E-09	12.0318	7837.365	194.0363	40.84412	7.599621
2592000	423427.6	4.35E-09	12.04499	7891.245	195.371	49.10171	7.58609

As shown in Figures 3.3-3 through 3.3-5, and Tables 3.3-3 through 3.3-5, the sump liquid initially starts out acidic. After injection of NaOH begins (within the first 100 seconds with containment spray pump starting) the pH quickly increases to greater than (>) 7.0 (well before significant radiolysis occurs) and remains above 7.0 for the remaining duration of the analysis period. Consistent with Regulatory Guide 1.183, Appendix A, re-evolution of iodine is not considered in the dose analysis.

3.3.4.1.2 Radiological Releases from Engineered Safety Features (ESF) Equipment

Emergency Core Cooling System (ECCS) leakage can occur from the following potential sources:

- Leakage from the ECCS pump seals, valve packing, mechanical joints, etc.
- Backleakage to the Refueling Water Storage Tank (RWST) through valve seats.

Leakage rates through the ECCS are controlled by periodic surveillance procedures that establish maximum leakage limitations. The assumed maximum permitted total leakage from both trains of ECCS is two gallons per hour (2 gph); which is greater than the current CLB value. The allowable valve seat leakage for valves that could result in backleakage to the RWST is a total of five gallons per hour (5 gph). Consistent with Regulatory Guide 1.183, a safety factor of two is applied in the AST LOCA analysis.

For determination of the dose contribution from ESF leakage, all radionuclides assumed to be released from the core (except noble gases) are assumed to be

instantaneously and homogeneously mixed in the containment sump. Actual leakage from the RCS sump through ESF equipment would not start until after the recirculation phase of the accident begins. However, for conservatism, and to decouple the dose analyses from the actual calculated recirculation start time, ESF leakage is assumed to begin at t = 0. For the backleakage to the RWST, the leakage needs to transit long lengths of liquid filled piping prior to reaching the RWST. Due to the time required for the leakage to transit through the piping prior to reaching the RWST, a conservative transit time of 35 hours is used before the leakage reaches the RWST. Leakage from the ECCS and backleakage to the RWST are assumed to continue for the full 30 day duration of the dose analysis.

The fraction of total iodine in the liquid that becomes airborne is assumed to be equal to the fraction of leakage that flashes to vapor. Consistent with Regulatory Guide 1.183, Appendix A, Section 5.4, if the temperature of the leakage exceeds 212°F, the fraction of total iodine in the liquid that becomes airborne is assumed equal to the fraction liquid that flashes to vapor. The flash fraction (FF) is determined using a constant enthalpy process based on the maximum time-dependent temperature of the sump liquid circulating outside of containment.

From the post-LOCA containment analysis, Table 3.3-6 summarizes the time-dependent sump liquid temperature profile.

Table 3.3-6
Containment Sump Water Temperature Profile

Time Period	Sump Water Temperature (°F)
0 – 10,000 sec (2.78 hrs)	253
10,000 – 20,000 sec (5.56 hrs)	230
20,000 – 30,000 sec (8.33 hrs)	212
30,000 – 80,000 sec (22.22 hrs)	190
80,000 – 100,000 sec (27.78 hrs)	185
100,000 – 200,000 sec (55.56 hrs)	180
200,000 – 700,000 sec (194.44 hrs)	170

As shown in Table 3.3-6, after 8.33 hours, the sump liquid temperature decreases below 212°F. Based on the constant enthalpy equation, the calculation flash fraction at 212.3°F is 0.1%. Per Regulatory Guide 1.183, Section 5.5 the iodine flashing factor of 0.1% for the sump water temperature at 212.3°F would need to be modeled as 10%, even though the long-term sump water temperature is typically considerably less than 212°F. Using the RG 1.183 deterministic approach would result in a 100 times increase in the airborne iodine activity from 0.1% to 10%. This is an extremely conservative iodine FF to be used without having any technical basis. Therefore, a reasonably conservative iodine FF is determined using the iodine hydrolysis reactions and experimental results. Also, the pH of sump water in the ESF leakage occurring in the auxiliary

building where major recirculation equipment located is evaluated in the following section to determine if the ESF leakage becomes more acidic when reacts with the bare concrete or paint coating and evolves more elemental iodine and reduces the solubility of CsI as a result of reduction of ESF leakage pH.

As discussed above, the long-term minimum sump water pH remains greater than 7.0 during and following a LOCA. Although the pH of the sump water is greater than 7, the ESF leakage takes place on the auxiliary building coated concrete floor, which is evaluated to determine the effect of any reaction with the leakage water.

The chemical reaction of the ESF leakage sump water with the various layers of paint coatings and concrete surfacers on the floor and walls of the ECCS pumps and components rooms, where the ESF leakage from various safety pumps takes place, is naturally basic, which promotes a higher pH in the sump water in the pump rooms. The aerosols from limestone concrete contain the basic oxides CaO, Na_2O, and K_2O. The results of a series of pH tests that were run at Oak Ridge National Laboratories on aerosol material indicate that the concrete–core reaction is basic and it has a tendency to increase the pH (Reference 22, Table 2.4). Therefore, even if it is assumed that the floor surface paint coating and concrete surfacers are damaged in the ECCS pumps and components rooms, the chemical reaction of the ESF leakage water with the bare concrete is expected to result in a higher pH, which provides a stronger chemical bond for the dissolved forms of iodine and converts them into non-volatile species. Therefore, the ESF leakage sump water pH is not adversely compromised when it leaks in the pump room floors isolated from the large bulk of sump inventory.

The amount of iodine partitioned from the ESF leakage in the auxiliary building atmosphere is a function of the initial iodine concentration in the sump water. The water inventory in the sump provides a good dilution for the post-LOCA core iodine inventory released in the sump water. A total of 40% of the core iodine is assumed to be released and homogeneously distributed in the sump water. The minimum PINGP sump water volume is 30,745 ft^3. The initial iodine concentration in the PINGP sump water is calculated to be 1.789E-06 mole/liter.

The procedure for calculating the iodine partition factors was established in Reference 23 over ranges of temperature, pH, and concentration likely to be found in the liquid water reactors and to be of particular interest. The procedure accounts for complicated series of hydrolysis reactions, chemistry of iodine in aqueous solution, and entire range of liquid-phase concentrations likely to be of particular interest. Tabulated results of partition factors covering the pH values, temperatures, and liquid-phase iodine concentrations are presented in various tables of the report. The PINGP sump water temperature varies from the peak temperature of 253^{0}F to less than 170^{0}F. The partition factors for sump water iodine concentration of 1.789E-06 mole/liter are interpolated for the sump water temperatures 100^{0}C (212^{0}F), 80^{0}C (176^{0}F), 50^{0}C (122^{0}F) and a pH = 7 from

Reference 23. Review of the information indicates that the sump water iodine flashing factors varies from 0.36% at 212^{0}F through 0.60% at 122^{0}F averaging 0.48%, which covers the entire range of the post-LOCA sump water temperatures. The comparison of the FF calculated for the sump water temperature at 212^{0}F (FF = 0.36%) and that using the constant enthalpy method (FF = 0.10%) indicates that the procedure in Reference 23 for calculating the iodine FF is conservative because it accounts for the hydrolysis and chemistry of iodine in addition to the thermal energy of the ESF leakage liquid and its concentration.

The derived Iodine partition coefficient is compared with the experimentally obtained information. EPRI performed 50 various tests to determine the quantity of radio iodine that is expected to become airborne from open sump water for several water conditions such as temperature, pH, iodine concentration, and degree of hydrolysis that had taken place (Reference 24, page S-1). The effect of increasing pH was to decrease the volatile iodine partition factor because the fraction of total iodine in water that was volatile decreased with increasing pH. Two partition coefficients were measured (Reference 24, page S-1).

Total iodine partition coefficient (R_T) = Total iodine in water / Total iodine in air

Volatile iodine partition coefficient (R_V) = Volatile iodine in water / Volatile iodine in air

The two partition coefficients are related by the fraction of total iodine in water that is in the volatile form (f_V) as follows:

$R_T = R_V / f_V$

The volatile iodine partition coefficient (R_V) is of interest to calculate the airborne iodine activity that evolves from the sump surface. The tests performed in Reference 24 separately measured these R_V values as listed in Reference 24 Tables 7 and 11. The results are applicable for the sump water concentration ranging from 10^{-8} to 10^{-5} mg/l (Reference 24, Section 3.8). The PINGP calculated sump water iodine concentration is within this range of applicability. The minimum R_V values for a pH of 7.0 were measured for the Zion sump water. The measured value of volatile partition coefficient (R_V) for the sump water with a temperature of 82^{0}C and a pH of 7.0 is 89, which results in the volatile iodine fraction in air of 0.0112 or 1.12% (1/89 = 0.0112).

Based on the above discussion, the use of an iodine FF of 3% for the ESF leakage temperature less than 212^{0}F is a very conservative because it is at least 6 times greater than the analytically derived average limit of 0.48% and 2.68 times greater than the experimentally measured limit of 1.12%.

To summarize the flash fractions used in the AST analysis are shown in Table 3.3-7.

Table 3.3-7
ECCS Leakage Iodine Flashing Factors

Time Period	Iodine Flashing Factor
0 – 5.56 hrs	4.27%
5.56 – 8.33 hrs	1.87%
> 8.33 hrs	3%

ECCS system leakage (pump seal, valve packing, mechanical joints) is into the ABSVZ. This leakage is filtered through the Auxiliary Building Special Ventilation System and released through the Shield Building Vent Stack.

The release from the RWST to the environment is through an Auxiliary Building Normal Vent Make-up Air Louver (described in Section 3.1.3).

3.3.5 Inputs and Assumptions

3.3.5.1 Assumptions

Regulatory Guide 1.183 (Reference 4) provides guidance on modeling assumptions that are acceptable to the NRC staff for the evaluation of the radiological consequences of a LOCA. The applicability of these modeling assumptions to this PINGP LOCA analysis are addressed in the regulatory conformance tables in Attachment 4.

3.3.5.2 Input Parameters

Input parameters used for the LOCA analysis are given in Table 3.3-8.

Table 3.3-8
Dose Analysis Inputs for LOCA

Input Parameter	Current Licensing Basis	Proposed AST	Justification for Change
Rated Thermal Power	1683 MWt	1852 MWt	Conservatism for future use
Isotopic Core Inventory (Ci/MWt)	Table 3.1-1	Table 3.1-1	No Change
Radionuclide Composition Noble Gases Halogens Alkali Metals Tellurium Group Noble Metals Lanthanides	Noble gases, iodines, and particulates for TID-14844.	 Xe, Kr I, Br Cs, Rb Te, SB, Se, Ba, Sr Ru, Rh, Pd, Mo, Tc, Co La, Zr, Nd, Eu, Nb, Pm, Pr, Sm, Y, Cm,	RG 1.183

Input Parameter	Current Licensing Basis	Proposed AST		Justification for Change
Cerium		Am Ce, Pu, Np		
Timing of Release Phases Gap Release Early In-Vessel Phase	Activity is released immediately	30 sec (Onset) 0.5 hour (Duration) 0.5 hour (Onset) 1.3 hour (Duration)		RG 1.183
Iodine Chemical Form Aerosol (CsI) Elemental Organic	5% 91% 4%	95% 4.85% 0.15%		RG 1.183
Fraction of Core Inventory Released into Containment Noble Gases Halogens Alkali Metals Tellurium Metals Ba, Sr Noble Metals Cerium Group Lanthanides	100% 50% 1% (Remainder of Core)	Gap 0.05 0.05 0.05 0.00 0.00 0.00 0.00 0.00	Early In-Vessel 0.95 0.35 0.25 0.05 0.02 0.0025 0.0005 0.0002	RG 1.183
Containment Free Air Volume	1,320,000 ft^3	1,320,000 ft^3		No change
Containment Spray System Parameters	Containment Spray is credited in the analysis	Containment Spray is not credited for iodine removal from containment atmosphere		Containment spray not credited in AST analysis based on AST release timing and containment spray system operating times.
Shield Building Free Air Volume	374,000 ft^3	374,000 ft^3		No change
Primary Containment Leakage Rate (Figure 3.3-1)				
Maximum Primary Containment Leak Rate ($L_1 + L_2 + L_3$)	0.25 wt%/day ≤24 hrs 0.125 wt%/day >24 hrs	0.15 wt%/day ≤24 hrs 0.075 wt%/day >24 hrs		Demonstrated in design analysis
ABSVZ Total Leak Rate (L_2)	0.10 wt%/day ≤24 hrs 0.05 wt%/day >24 hrs	0.06 wt%/day ≤24 hrs 0.03 wt%/day >24 hrs		Demonstrated in design analysis
Bypass Total Leak Rate (L_3)	0.01 wt%/day ≤24 hrs 0.005 wt%/day >24 hrs	0.006 wt%/day ≤24 hrs 0.003 wt%/day >24 hrs		Demonstrated in design analysis
Shield Bldg Total	0.14 wt%/day ≤24 hrs	0.084 wt%/day ≤24 hrs		Demonstrated in design

Input Parameter	Current Licensing Basis	Proposed AST	Justification for Change
Leak Rate (L_1)	0.07 wt%/day >24 hrs	0.042 wt%/day >24 hrs	analysis
Shield Building Drawdown Time	4.5 minutes	12 minutes	Conservatism used in design analysis
ABSVZ Drawdown Time	6 minutes	20 minutes	Conservatism used in design analysis
Initiation of Shield Building Recirculation	20 minutes	22 minutes	Conservatism used in design analysis
Shield Building Recirculation Flow Rate	3600 cfm	3,600 cfm	No change
Shield Building Mixing	50%	50%	No change
Shield Building Exhaust Flow Rates	1000 cfm	2,000 cfm (Exhaust flow rate is 1,000 cfm and is doubled to simulate 50% mixing in Shield Building)	Demonstrated in design analysis
ABSVS Charcoal Filter Efficiencies	70% for Elemental Iodine 70% for Organic Iodide	80% for Elemental Iodine 80% for Organic Iodide	Increase to achieve acceptable control room dose results. Increase is acceptable based on historical filter testing results.
ABSVS HEPA Filter Efficiencies	99% for Aerosol	99% for Aerosol	No change
SBVS Charcoal Filter Efficiencies	70% for Elemental Iodine 70% for Organic Iodide	Not Credited	Conservatism used in design analysis
SBVS HEPA Filter Efficiencies	99% for Aerosol	99% for Aerosol	No change
Containment Leakage Release Point	Containment Surface and SB Vent Stack	SB Vent Stack	Conservatism used in design analysis.
Containment Wetted Surface Area	Not Credited	246,270 ft^2	Demonstrated in design analysis
Minimum Containment Sump Liquid Volume	250,874 gallons	230,000 gallons	AST analyses conservatively neglects liquid volume in inactive regions.
ESF Leakage Rate	1106 cc/hr	4 gph (2 * 2 gph)	Demonstrated in design analysis

Input Parameter	Current Licensing Basis	Proposed AST	Justification for Change
ESF Leakage Initiation Time	16.25 minutes	0.0 seconds	Conservatism demonstrated in design analysis
Long Term Sump Liquid pH	> 7.0	> 7.0	No change
Sump Liquid Temperature Profile	Peak at 252.9°F	Section 3.3.3.2	CLB analysis is based on a peak sump liquid temperature. AST analysis is based on temperature profile.
ESF Leakage Iodine Flashing Fraction	10%	Section 3.3.3.2	Demonstrated in design analysis.
Chemical Form of Iodine in ESF & RWST Leakage	100% Elemental	97% Elemental 3% Organic	RG 1.183
ESF Leakage Release Point	SB Vent Stack	SB Vent Stack	No change
RWST Leakage Rate	10 gph (2 * 5 gph)	10 gph (2 * 5 gph)	No change
RWST Leakage Iodine Flashing Fractions	0.1%	Section 3.3.3.2	Inputs are based on a different approach used to determine conservative release fractions from RWST.
RWST Leakage Release Point	Auxiliary Building Air Intake Louvers	Auxiliary Building Air Intake Louvers	No change
RWST Capacity	275,000 gallons	275,000 gallons	No change
RWST Liquid Temperature Minimum Maximum	 60°F 120°F	 60°F 120°F	No change
RWST Remaining Liquid Volume at Transfer to Recirculation	29,040 gallons	29,040 gallons	No change
Minimum RWST Leakage Transit Time	16.25 minutes	35 hours	Demonstrated in design analysis
Control Room Parameters	Table 3.2-1	Table 3.2-1	Discussed in Table 3.2-1
Control Room Atmospheric Dispersion Factors for Containment & ESF Leakage	Discussed in Reference 15.	Table 3.1-12	χ/Q values are discussed in Section 3.1.3 (Different receptor locations are modeled)

Input Parameter	Current Licensing Basis	Proposed AST	Justification for Change
Release via Unit 2 Shield Building Vent Stack			
Control Room Atmospheric Dispersion Factors for RWST Leakage Release via Unit 2 Aux Bldg Air intake Louvers	Discussed in Reference 15.	Table 3.1-12	χ/Q values are discussed in Section 3.1.3 (Different receptor locations are modeled)

3.3.6 Summary and Conclusions

Post-LOCA EAB, LPZ, CR, and TSC doses at the PINGP Nuclear Generating Plant are summarized in Table 3.3-9, below.

Table 3.3-9
LOCA Dose Results

Post-LOCA Activity Release Path	Post-LOCA TEDE Dose (Rem) Receptor Location			
	Control Room	TSC	EAB	LPZ
Containment Leakage	4.04E+00	8.72E-01	2.51E+00 (1.7 hr)	2.35E+00
ESF Leakage	3.04E-01	7.72E-02	6.58E-02 (1.7 hr)	6.92E-02
RWST Leakage	1.10E-01	4.08E-03	1.30E-03 (96.0 hr)	5.24E-04
Containment Shine	0.00E+00	9.23E-01	0.00E+00	0.00E+00
External Cloud	4.51E-02	2.54E+00	0.00E+00	0.00E+00
CR Filter Shine	2.33E-02	6.20E-02	0.00E+00	0.00E+00
Total	**4.52E+00**	**4.48E+00**	**2.58E+00**	**2.42E+00**
Allowable TEDE Limit	**5.00E+00**	**5.00E+00**	**2.50E+01**	**2.50E+01**

As shown the radiological consequence results for the Control Room, TSC, EAB and LPZ are all within the allowable limits. The LOCA analyses are provided in Attachment 6.

3.4 Fuel Handling Accident (FHA) Radiological Assessment

3.4.1 Methodology Overview

In the postulated FHA, a fuel assembly is postulated to be dropped and damaged during fuel handling. This accident may take place either in the containment or the spent fuel pool (SFP). The analysis design inputs and assumptions have been chosen such that the results of the single FHA analysis are bounding for the accident occurring in either the containment or the SFP. In order to do so, the most limiting 0 to 2 hour control room atmospheric dispersion factor (χ/Q) was selected from the various potential release paths applicable to the FHA. The SFP special ventilation system (SFPSVS) and shield building ventilation system (SBVS) are operable by Technical Specification LCO 3.7.13 (Reference 25) and LCO 3.6.9 (Reference 26), respectively. Although the analysis does not take credit for filtration by the SFPSVS and SBVS, the systems are not prevented from operating after an FHA.

The post-FHA potential release paths are described as follows:

<u>FHA In SFP Enclosure</u>
For a postulated FHA in the SFP pool, the release from the pool is to the SFP enclosure. Release from the SFP enclosure can occur through several possible locations depending on the ventilation system configuration (Shield Building vent stack if SFPSVS is operating, SFP Normal Vent Stack if SFP Normal Ventilation is operating or CAAB if no ventilation systems are operating). The different locations are evaluated to identify the limiting release point relative to the CR vent intake.

<u>FHA in Containment</u>
For a postulated FHA in the refueling pool inside of containment, the release from the pool is to the Containment. Release from the Containment can occur through several possible locations (Equipment Hatch, Shield Building Vent Stack or CAAB). The different locations are evaluated to identify the limiting release point relative to the CR vent intake. These locations and associated χ/Q values are shown in Table 3.4-1. With the exception of the χ/Q values for the CAAB release and the Shield Building Vent Stack, all of the other χ/Q values were previously submitted to the NRC in Reference 16. χ/Q values for the CAAB release and the Shield Building Vent Stack are discussed in Section 3.1.3.

Table 3.4-1
χ/Q Values for FHA Source/Receptor Pairs

Release Source	Receptor Location	0-2 Hour CR χ/Q (sec/m^3)
Unit 1 Equipment Hatch	Unit 1 Control Room Intake	1.73E-03
Unit 1 Equipment Hatch	Unit 2 Control Room Intake	4.79E-04
Unit 2 Equipment Hatch	Unit 1 Control Room Intake	6.04E-04
Unit 2 Equipment Hatch	Unit 2 Control Room Intake	3.11E-03
Common Area of Aux Bldg	Unit 1 Control Room Intake	6.71E-03
Common Area of Aux Bldg	Unit 2 Control Room Intake	4.79E-03
Spent Fuel Pool Vent Normal Exhaust Stack	Unit 1 Control Room Intake	1.09E-03
Spent Fuel Pool Vent Normal Exhaust Stack	Unit 2 Control Room Intake	2.82E-03
Unit 1 Shield Bldg Vent Stack	Unit 1 Control Room Intake	3.76E-03
Unit 1 Shield Bldg Vent Stack	Unit 2 Control Room Intake	8.33E-04
Unit 2 Shield Bldg Vent Stack	Unit 1 Control Room Intake	1.23E-03
Unit 2 Shield Bldg Vent Stack	Unit 2 Control Room Intake	4.53E-03

The Safety Evaluation approving the PINGP selective implementation of AST for the FHA (Reference 12) requires that the licensee should evaluate the effect on the FHA dose analysis of any change to the credited filtration efficiencies for the SFPSVS and SBVS filters or any change in assumed operation of these systems. As part of this licensing submittal, Xcel Energy is proposing to remove the SFPSVS and the SBVS charcoal filtration system from the PINGP Technical Specifications. Since the revised analysis discussed in this submittal uses the most limiting χ/Q for the common area of auxiliary building without crediting any charcoal filtration, the resulting dose consequences will remain bounding for the post-FHA unfiltered releases from the SFP and containment.

A review of the above χ/Qs in Table 3.4-1 indicate that the CAAB represents the most limiting release location for the FHA occurring either in the SFP or in the containment. Therefore, the post-FHA doses are analyzed using CAAB to Unit 1 CR intake χ/Qs.

3.4.2 Analytical Model

The RADTRAD Code (Version 3.03) was used to determine offsite doses and doses to Control Room personnel for the postulated FHA. More detailed discussions of the models employed are provided in Section 3.2.

The RADTRAD models for DBA-FHA is graphically presented on Figure 3.4-1

Figure 3.4-1
Analytical Flow Model for FHA Release

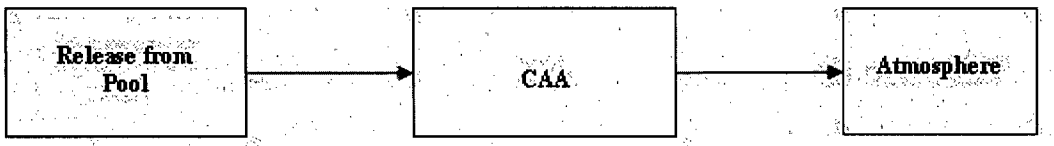

3.4.3 Radiological Source Term

Following accident initiation at 50 hours after shutdown, the radionuclide inventory from the damaged fuel pins is assumed to be released over a two hour time period (consistent with Regulatory Guide 1.183, Appendix B, Sections 4.1 and 5.3). The core radial peaking factor used is 1.90, which is selected to bound operating experience at the PINGP and is expected to bound future core designs as well. The cycle-specific peaking factor limits are stated in each cycle's Core Operating Limits Report (COLR). The current limit in the COLR is 1.77.

The ORIGEN-S, Version 2.0, codes was used to calculate plant-specific fission product inventories for use in the FHA dose analyses (same computer code that as was used for the post-LOCA source term). All of the fuel pins in one fuel assembly are assumed to be damaged; consistent with the CLB. There are 121 fuel assemblies in the PINGP core. Thus, one completely damaged fuel assembly is 1/121 of the core. Gap fractions are discussed in Section 3.2.4.2.1.

The core inventory of radionuclides is shown on Table 3.2-5. For the FHA not all of the radionuclides in Table 3.2-5 are relevant for the dose analysis of the postulated event. For example, alkali metal releases (as particulates) are assumed to experience an infinite DF due to water submergence (per Regulatory Guide 1.183, Appendix B, Section 3). The core inventory for radionuclides relevant to the dose analysis of the postulated FHA is shown on Table 3.4-2.

Table 3.4-2
Core Radionuclide Inventory for FHA Analysis

Nuclide	Core Inventory (Ci) at 1683 MWt
Kr-85	7.15E+05
Kr-85m	1.08E+07
Kr-87	2.12E+07
Kr-88	2.82E+07
Xe-131m	5.06E+05
Xe-133	9.15E+07
Xe-133m	2.86E+06
Xe-135	2.07E+07
Xe-135m	1.95E+07
Xe-138	7.72E+07
I-131	4.50E+07
I-132	6.51E+07
I-133	9.13E+07
I-134	1.02E+08
I-135	8.72E+07

For input to the RADTRAD computer code, the Curies (Ci) are divided by the thermal power level (1683 MWt); i.e., the input to RADTRAD is in terms of Ci/MWt. As previously discussed the AST radiological consequence analyses are based on a power level of 1852 MWt. In this case, the 1852 MWt is an input to RADTRAD. Thus, the source term input to RADTRAD is based on a power level of 1852 MWt.

The values in Table 3.4-2 do not include the 1.90 power peaking factor, the 1/121 fuel assembly fraction or any effects from pool water scrubbing. In addition, the values in Table 3.4-2 do not include the 50 hour decay time. The 50 hour decay time is included in the RADTRAD computer code inputs.

3.4.4 Radiological Releases

The analysis assumes 23 feet of water above damaged fuel. PINGP Technical Specification Surveillance Requirement (SR) 3.9.2.1, "Refueling Cavity Water Level," requires that a minimum of 23 feet of water above the top of the reactor vessel flange be maintained during movement of irradiated assemblies within containment. Similarly, SR 3.7.15.1, "Fuel Storage Pool Water Level," requires a minimum of 23 feet of water over the top of the assemblies to be maintained during movement of irradiated fuel assemblies in the spent fuel storage pool. This assumption is consistent with Regulatory Guide 1.183. Due to the submergence of the damaged fuel, the iodine release is assumed to experience a DF of 200 per Regulatory Guide 1.183. The assumed iodine chemical form after decontamination by the water pool is 43% organic and 57% elemental. No DF is applied to the noble gases. As previously noted, the DF for particulates is assumed to be infinite.

As discussed above in Section 3.4.1, the postulated release from the CAAB provides the most conservative location. No credit for mixing or dilution within the CAAB is assumed.

3.4.5 Assumptions and Inputs

3.4.5.1 Assumptions

Regulatory Guide 1.183 (Reference 4) provides guidance on modeling assumptions that are acceptable to the NRC staff for the evaluation of the radiological consequences of a FHA. The applicability of these modeling assumptions to this PINGP FHA analysis are discussed in the regulatory conformance tables in Attachment 4.

3.4.5.2 Input Parameters

Input parameters used for the FHA analysis are given in Table 3.4-3.

Table 3.4-3
Dose Analysis Inputs for FHA

Input Parameter	Current Licensing Basis (AST)	Proposed AST	Justification for Change
Rated Thermal Power	1683 MWt	1852 MWt	Conservatism for future use
Isotopic Core Inventory (Ci/MWt)	Table 3.4-1 (at 1683 MWt)	Table 3.4-1 (at 1852 MWt)	Conservatism for future use
Fraction of Fission Product Inventory in Fuel Pin Gap I-131 Kr-85 Other Noble Gases Other Halogens Alkali Metals	 0.08 0.10 0.05 0.05 0.12	 0.08 0.10 0.05 0.05 0.12	No Change
Radionuclide Composition Noble Gases Halogens Alkali Metals	 Xe, Kr I, Br Cs, Rb	 Xe, Kr I, Br Cs, Rb	No Change
Number of Damaged Fuel Assemblies	1	1	No Change
Number of Fuel Assemblies in Core	121	121	No Change
Irradiated Fuel Decay	50 hours	50 hours	No Change
Radial Peaking Factor	1.65	1.90	Conservatism for future use

Fuel Enrichment w/o U-235	5.0%	5.0%	No Change
Fuel Cycle Burnup	65,000 MWD/MTU (lead fuel assembly)	25,000 MWD/MTU (Core Average)	Based on source term determination
Iodine Chemical Form Released from Fuel to Water Aerosol (CsI) Elemental Organic	95% 4.85% 0.15%	95% 4.85% 0.15%	No Change
Minimum Refueling Cavity and SFP Water Depth	23 feet	23 feet	No Change
Iodine Decontamination Factors Elemental Organic	285 1	285 1	No Change
Overall Effective Decontamination Factor for Iodine	200	200	No Change
Chemical Form of Iodine Released from Pool Water Elemental Organic	57% 43%	57% 43%	No Change
DF of Noble Gas	1	1	No Change
DF of Particulates	Infinite	Infinite	No Change
Release Duration	100% of activity released over two hour time period	99% of activity released over two hour time period	Function of analysis methods. 99% Release rate has been accepted by the NRC in other AST license amendments.
Control Room Parameters	Table 3.2-1	Table 3.2-1	Discussed in Table 3.2-1
Control Room Atmospheric Dispersion Factors for Release from CAAB to Unit 1 CR Vent Intake		Table 3.4-1	Discussed in Section 3.1.3

Summary and Conclusions
The post-FHA EAB, LPZ, and CR doses are summarized in the Table 3.4-4:

Table 3.4-4
FHA Dose Consequence Results

Post-FHA Activity Release Path	Post-FHA TEDE Dose (Rem)		
	Receptor Location		
	Control Room	EAB	LPZ
Common Area of Auxiliary Building	3.64E+00	2.28E+00 (0.0 hr)	6.21E-01
Total	**3.64E+00**	**2.28E+00**	**6.21E-01**
Allowable TEDE Limit	**5.0E+00**	**6.3E+00**	**6.3E+00**

The results of analysis in Table 3.4-4 show that the EAB, LPZ, and CR doses are within allowable limits for a FHA occurring either in the containment or the SFP enclosure without containment integrity or SFP enclosure integrity. The results demonstrate that the following PINGP Technical Specification requirements can be relaxed.

The irradiated fuel can be moved in the reactor pressure vessel, reactor water cavity, and SFP enclosure without crediting the SFPSVS or SBVS charcoal filtration after the reactor has been sub-critical for at least 50 hours. The SBVS charcoal adsorbers and the SFPSVS can be physically deleted or abandoned in-place with deletion of associated Technical Specification requirements. In addition, revisions to TS 5.5.9 are proposed to delete testing requirements for the SBVS.

3.4.6 Shutdown Safety Assessment/Defense-In-Depth
As discussed previously the NRC approved selective implementation of AST for the PINGP FHA dose analysis (Reference 12). As part of the selective implementation of AST for the FHA, the PINGP management committed to implement administrative controls to facilitate restoration of containment closure as a "defense-in-depth" measure to mitigate the consequences of a postulated FHA inside of containment. These administrative controls are implemented by plant procedures which are not affected by this licensing submittal.

The FHA analyses is provided in Attachment 7.

3.5 Heavy Load Drop Accident Radiological Assessment

3.5.1 Methodology Overview

Consistent with RG 1.183, Appendix B, Section 1.1, a Heavy Load Drop (HLD) is treated as a type of FHA. In the postulated HLD, a heavy load is dropped over the open reactor vessel. As part of the heavy loads control program, the only heavy loads that are allowed by procedure to be moved over the open reactor vessel, with irradiated fuel in the vessel, are the reactor vessel head and the reactor vessel upper internals. The reactor vessel head is moved when the upper internals are in place. The upper internals are removed prior to, and following, refueling activities. The postulated drop of the reactor vessel head and the upper internals were both examined. The limiting case was determined to be the drop of the upper internals. The analysis determined that, up to, the fuel pins equivalent to 1.8 fuel assemblies could be damaged due to the drop of the upper internals. In order to be conservative the dose consequence analysis assumes that the fuel pins equivalent to two (2) fuel assemblies are damaged. In addition, the maximum gap activity and peaking factor of 1.9 is applied to the damaged pins.

This accident can only occur inside containment. As this event is postulated to occur with containment open, the same release path described in Section 3.4 for the FHA is used. Thus, the post-HLD doses are analyzed using CAAB to Unit 1 CR intake χ/Qs.

3.5.2 Analytical Model

The RADTRAD Code (Version 3.03) was used to determine offsite doses and doses to Control Room personnel for the postulated HLD. More detailed discussions of the models employed are provided in Section 3.2.

3.5.3 Radiological Source Term

For the HLD, the accident is postulated to occur at seven (7) days after shutdown. For the first seven days after shutdown, movement of a heavy load over an open reactor vessel, with irradiated fuel in the vessel, is not allowed with containment open. The HLD uses a longer time period following shutdown than the FHA (50 hours) in order to achieve acceptable results. Following accident initiation at seven days after shutdown, the radionuclide inventory from the damaged fuel pins is assumed to be released over a two hour time period (consistent with Regulatory Guide 1.183, Appendix B, Sections 4.1 and 5.3). The core radial peaking factor used is 1.90 as discussed in Section 3.4.

The ORIGEN-S, Version 2.0, code was used to calculate plant-specific fission product inventories for use in the HLD dose analyses (same computer code that was used for the post-LOCA and post-FHA source term). All of the fuel pins in two fuel assemblies are assumed to be damaged, in order to be conservative relative to the damage predicted for this event. There are 121 fuel assemblies in the PINGP core. Thus, the equivalent to two completely damaged fuel

assemblies is 2/121 of the core. A peaking factor of 1.90 is applied to the fission product inventory of the damaged pins. The same gap fractions as described in Section 3.4 are used for the HLD analysis.

Similar to the FHA source term described in Section 3.4.3, for the HLD not all of the radionuclides in Table 3.2-5 are relevant for the dose analysis of the postulated event. The core inventory for radionuclides relevant to the dose analysis of the postulated HLD is shown on Table 3.4-2.

For the HLD, the values in Table 3.4-2 do not include the 1.90 power peaking factor, the 2/121 fuel assembly fraction or any effects from pool water scrubbing.

3.5.4 Radiological Releases

The analysis assumes 23 feet of water above damaged fuel. PINGP Technical Specification Surveillance Requirement (SR) 3.9.2.1, "Refueling Cavity Water Level," requires that a minimum of 23 feet of water above the top of the reactor vessel flange be maintained during movement of irradiated assemblies within containment. This assumption is consistent with Regulatory Guide 1.183. Due to the submergence of the damaged fuel, the iodine release is assumed to experience a DF of 200 per Regulatory Guide 1.183. The assumed iodine chemical form after decontamination by the water pool is 43% organic and 57% elemental. No DF is applied to the noble gases. As previously noted, the DF for particulates is assumed to be infinite.

As discussed above in Section 3.4.1, the postulated release from the CAAB provides the most conservative location. No credit for mixing or dilution within the CAAB is assumed.

3.5.5 Assumptions and Inputs

3.5.5.1 Assumptions

Regulatory Guide 1.183 (Reference 4) provides guidance on modeling assumptions that are acceptable to the NRC staff for the evaluation of the radiological consequences of a HLD. The applicability of these modeling assumptions to this PINGP HLD analysis is discussed in the regulatory conformance tables in Attachment 4.

3.5.5.2 Input Parameters

Input parameters used for the HLD analysis are given in Table 3.5-1.

Table 3.5-1
Dose Analysis Inputs for HLD

Input Parameter	Current Licensing Basis (AST)	Proposed AST	Justification for Change
Rated Thermal Power	1683 MWt	1852 MWt	Conservatism for future use
Isotopic Core Inventory (Ci/MWt)	Table 3.4-1	Table 3.4-1	No Change
Fraction of Fission Product Inventory in Fuel Pin Gap I-131 Kr-85 Other Noble Gases Other Halogens Alkali Metals	 0.08 0.10 0.05 0.05 0.12	 0.08 0.10 0.05 0.05 0.12	No Change
Radionuclide Composition Noble Gases Halogens Alkali Metals	 Xe, Kr I, Br Cs, Rb	 Xe, Kr I, Br Cs, Rb	No Change
Number of Damaged Fuel Assemblies	2	2	No Change
Number of Fuel Assemblies in Core	121	121	No Change
Irradiated Fuel Decay	7 days	7 days	No Change
Radial Peaking Factor	1.65	1.90	Conservatism for future use
Fuel Enrichment w/o U-235	5.0%	5.0%	No Change
Fuel Cycle Burnup	65,000 MWD/MTU (lead fuel assembly)	25,000 MWD/MTU (Core Average)	Based on source term determination
Iodine Chemical Form Released from Fuel to Water Aerosol (CsI) Elemental Organic	 95% 4.85% 0.15%	 95% 4.85% 0.15%	No Change
Minimum Refueling Cavity and SFP Water Depth	23 feet	23 feet	No Change

Iodine Decontamination Factors Elemental Organic	285 1	285 1	No Change
Overall Effective Decontamination Factor for Iodine	200	200	No Change
Chemical Form of Iodine Released from Pool Water Elemental Organic	57% 43%	57% 43%	No Change
DF of Noble Gas	1	1	No Change
DF of Particulates	Infinite	Infinite	No Change
Release Duration	100% of activity released over two hour time period	99% of activity released over two hour time period	Function of analysis methods. 99% Release rate has been accepted by the NRC in other AST license amendments.
Control Room Parameters	Table 3.2-1	Table 3.2-1	Discussed in Table 3.2-1
Control Room Atmospheric Dispersion Factors for Release from CAAB to Unit 1 CR Vent Intake		Table 3.4-1	Discussed in Section 3.1.3

3.5.6 Summary and Conclusions

The post-HLD EAB, LPZ, and CR doses are summarized in the Table 3.5-2:

Table 3.5-2
HLD Dose Consequence Results

Post HLD Activity Release Path	Post-HLD TEDE Dose (Rem)		
	Receptor Location		
	Control Room	EAB	LPZ
Common Area of Auxiliary Building	4.42E+00	2.77E+00 (168 hr)	7.56E-01
Total	**4.42E+00**	**2.77E+00**	**7.56E-01**
Allowable TEDE Limit	**5.0E+00**	**6.3E+00**	**6.3E+00**

The results of analysis in Table 3.5-2 show that the EAB, LPZ, and CR doses are within allowable limits for a HLD occurring in the containment without containment integrity at seven days after shutdown. The HLD analysis is provided in Attachment 8.

3.6 Main Steam Line Break Radiological Assessment

The postulated main steam line break is the rupture of a steam line that cannot be isolated from one of the Steam Generators. The limiting break location is selected based on licensing basis criteria. The limiting break location is determined based on selecting an unisolable break location that results in the shortest time period to blow down the steam from the ruptured SG. Based on these criteria, the limiting break location is the six inch line between the main steam line and the SG PORV.

3.6.1 Methodology Overview

The design basis main steam line break accident (MSLB) is analyzed using a conservative set of assumptions and as-built design inputs. The numeric values of the critical design inputs are conservatively selected to assure an appropriate prudent safety margin against unpredicted events in the course of an accident and compensate for large uncertainties in facility parameters, accident progression, radioactive material transport, and atmospheric dispersion. The MSLB analysis is performed using the guidance in Regulatory Guide 1.183 and its Appendix E.

For PINGP, no fuel damage is predicted to occur for the MSLB. Per Regulatory Guide 1.183 (Reference 1, Appendix E, Section 2.0), if no or minimal fuel damage is postulated for the MSLB event, then the activity released should be the maximum coolant activity allowed by the Technical Specifications, and two cases of iodine spiking corresponding to a pre-accident iodine spike and a concurrent iodine spike should be assumed.

<u>Pre-accident Iodine Spike Release</u>

In the pre-accident iodine spike release scenario, a reactor transient has occurred prior to the postulated MSLB accident and has raised the Reactor Coolant System (RCS) iodine concentration to the maximum value permitted by Technical Specifications. The RCS iodine concentration of 30 μCi/g Dose Equivalent (DE) I-131 is obtained from Technical Specifications.

<u>Concurrent Accident Iodine Spike Release</u>

The primary system transient associated with the MSLB causes an iodine spike in the primary system. The increase in primary coolant iodine concentration is estimated using a spiking model that assumes that the iodine release rate from the fuel rods to the primary coolant (expressed in curies per unit time) increases to a value 500 times greater than the release rate corresponding to the iodine concentration at the equilibrium value of 0.50 μCi/gm DE I-131 specified in Technical Specifications (i.e., concurrent iodine spike case). The assumed iodine spike duration should be 8 hours (Reference 4, Appendix E, Section 2.2).

The isotopic iodine appearance rates are calculated using the following equation.

$$\text{Iodine Appearance Rate} = \text{Iodine Concentration} * (\lambda_{decay} + \lambda_{purification} + \lambda_{RCS\,Leak\,Rate})$$

$$\text{Iodine Appearance Rate} = A_i * (\lambda_i + \frac{f_L \eta + LR}{M_{RCS}})$$

Where: A_i = Concentration of Nuclide i (μCi/gm)
λ_i = Radioactive Decay Constant for Nuclide i (sec^{-1})
f_L = Letdown flow rate (gm/sec)
η = Letdown Demineralizer Efficiency/100 (unitless)
LR = Rate of Reactor Coolant System Identified and Unidentified Leakage (as allowed by Technical Specifications((gm/sec)

The total isotopic iodine activity is calculated using the spike duration of 8 hours. The RADTRAD model postulates that 99% of all fuel activity available for release is released into the RCS within 8 hours.

3.6.2 Analytical Model

The RADTRAD computer code is used to determine the MSLB accident doses at the EAB, LPZ and Control Room, consistent with Regulatory Guide 1.183. For each spiking scenario, models were designed for two different release paths; i.e.,

- The intact SG PORV / TDAFW Pump steam exhaust, and
- The broken steam line release path.

Following a main steam line break, auxiliary feedwater to the faulted SG is isolated and the steam generator is allowed to steam dry. Thus, radionuclides carried from the primary coolant to the faulted steam generator via leaking tube(s) are assumed to be released directly to the environment. Due to uncertainty associated with progress of the MSLB accident, it is conservatively assumed that the tubes in the intact SG are uncovered during the first two hours of the event and that all of the iodine activity in the primary-to-secondary leakage in this two hour time interval flashes to vapor without scrubbing through the SG liquid. After the initial two hours, the primary-to-secondary leakage is assumed to mix with the secondary water. After the initial two hours following the event a partition coefficient of 10 is assumed for iodine released from the intact steam generators. The credited partition coefficient of 10 is conservative relative to a value of 100 allowed by Regulatory Guide 1.183 .

Following a MSLB, it is assumed that it takes 45.5 hours to cool down to the point where shutdown cooling (RHR System) is placed into operation. At this point steam releases from the intact SG is terminated. It is assumed that it takes an additional 29.5 hours to cooldown to less than 212°F. At this point primary-to-secondary leakage in the faulted SG is terminated. To summarize, the steam

release through the faulted SG and the intact SG PORV are assumed to last for the following time periods.

- 0 to 45.5 hours Steam Release from Intact SG
- 0 to 75 hours Release from Faulted SG

A schematic of the analytical model is provided in Figure 3.6-1.

Figure 3.6-1
MSLB RADTRAD Model

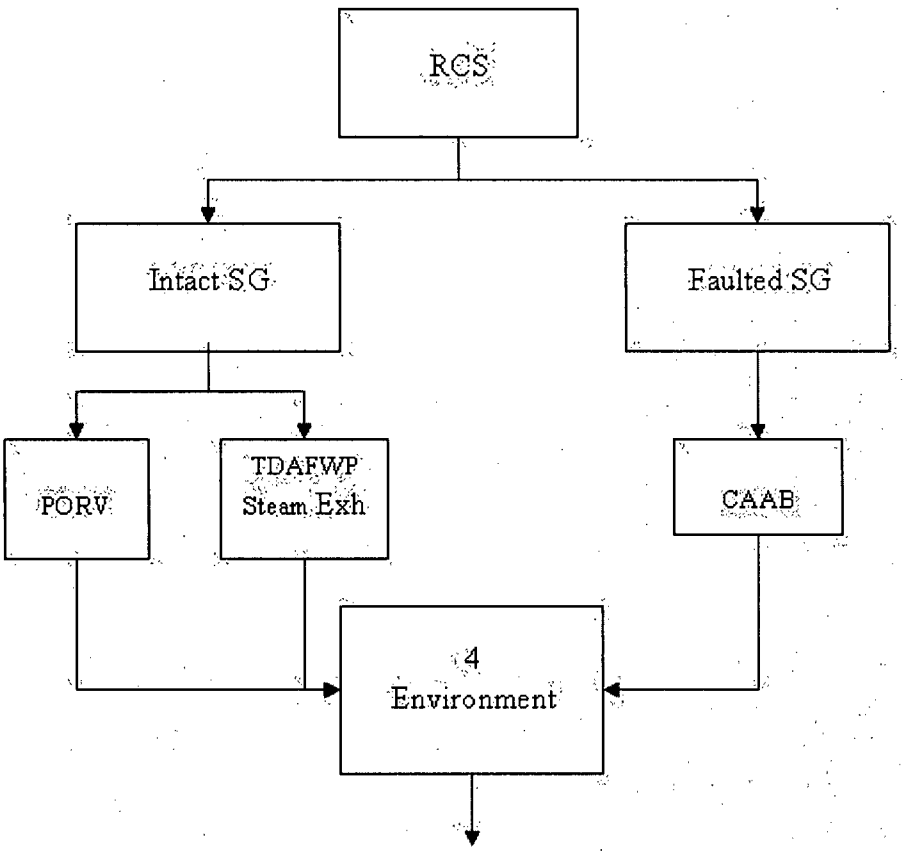

3.6.3 Radiological Source Term

For this analysis only the iodine and noble gas activities, which are conservatively characterized by operation with 1% core fuel defects and the equilibrium and spiked release rates from that fuel, define the source terms. RADTRAD uses these activities, in curies per megawatt, and then applies nuclide release fractions and a specified core power to calculate the source term for a given case. The AST release fractions associated with iodines and noble gases are assumed to be 100% for the 1% of the fuel with defects, and are released to the reactor coolant system.

No additional fuel damage is assumed due to this accident. In accordance with regulatory guidance, as previously described, two different cases of iodine spiking are analyzed.

3.6.3.1 Reactor Coolant System Source Term

3.6.3.1.1 RCS Iodine Concentrations

Table 3.2-10 shows the calculation for the RCS iodine concentration, based on Thyroid DCFs, for a Pre-existing Iodine Spike.

For the accident-induced iodine spike, the iodine release rates corresponding to a RCS concentration of 0.50 μCi/gm DE I-131 are calculated using methodology described in Section 3.6.2. The release rates are then multiplied by the RCS mass and a factor of 500 to yield a release rate in units of Ci/minute. Based on the release rate and assuming an eight (8) hour duration a total iodine release is determined. Table 3.6-1 shows the total accident induced iodine spike activity.

Table 3.6-1
RCS Iodine Inventory Due to Accident-Induced Spike
(500x Release Rate)

Isotope	CLB Appearance Rate (Ci/sec)	AST Appearance Rate (Ci/sec)	AST Total Iodine Activity Released (Ci)
I-131	1.06	1.676	4.826E+04
I-132	2.76	4.485	1.292E+05
I-133	1.83	2.916	8.397E+04
I-134	1.12	1.836	5.287E+04
I-135	1.36	2.152	6.199E+04

3.6.3.1.2 RCS Noble Gas Concentrations

Table 3.2-8 shows the calculation for the RCS noble gas concentration for 1% failed fuel.

3.6.3.1.3 RCS Cesium and Rubidium Concentrations

As described in Section 3.2.3.4.4.4, Cesium and Rubidium are not included in the RCS source term for the MSLB.

3.6.3.2 Secondary System Source Terms

3.6.3.2.1 Secondary System Iodine Concentrations

The secondary systems iodine concentrations corresponding to the Technical Specification limit of 0.10 μCi/gm are given in Table 3.2-11.

3.6.4 Radiological Release Paths

The activity release model is consistent with the model given on Figure E-1 of Regulatory Guide 1.183. Activity that originates in the RCS is released to the secondary coolant by means of the primary-to-secondary coolant leak rate. This design basis leak rate value is 150 gpd from the intact SG, and 1.0 gpm for the faulted SG with the broken steam line. Release paths from the faulted SG and the intact SG are as follows.

Faulted SG Releases

Following a MSLB the faulted SG (i.e., the SG with the steam line break) is assumed to steam dry. Reactor coolant is assumed to leak into the faulted SG at the Technical Specification maximum leak rate of 1.0 gpm (Refs. 9.6.9). To maximize the offsite doses it is assumed that offsite power is lost so that the main steam condensers are not available. RCS noble gas activity entering the faulted SG via Primary-to-Secondary (P-T-S) leakage is assumed to be released directly to the environment for 0-75 hrs through the sheet metal siding of the common area of Auxiliary Building (CAAB) as discussed below using the applicable χ/Q values without reduction or mitigation. Since the faulted SG is assumed to be dried-out in 600 seconds (10 minutes), the RCS iodine activity entering the faulted SG via P-T-S leakage is also assumed to be released directly to the environment. During the faulted SG dryout period, the SG liquid mass is instantaneously evaporated to steam and released to the CAAB and from there to the atmosphere at the surface closest to the intake for the Control Room Special Ventilation System (CRSVS) normal air intake. Following the dryout, the P-T-S leakage continues in the faulted SG, which is instantly and homogeneously distributed in the entire volume of the empty faulted SG (single well mixed volume) and released to the atmosphere via the CAAB. The release from the faulted SG is postulated as a ground level release to the environment. Primary-to-secondary leakage into the faulted SG is assumed to continue for a total of 75 hours, until the faulted SG temperature decreases to 200°F. Therefore, dose contributions to the EAB, LPZ, and CR end when the release stops at 75 hours.

The MSLB is postulated to occur upstream of the Main Steam Isolation Valve (MSIV) resulting in an un-isolable release from the faulted SG. The blowdown from the faulted SG is into the Auxiliary Building (AB). To preclude over-

pressurization in the Auxiliary Building during a MSLB, also referred to as a high energy line break (HELB), several doors with engineered ceramic pins are provided to open at a relatively low differential pressure. The differential pressure acting on the door will break the ceramic pin and the door will open to relieve the pressure. The open doors provide a flow path to the common area of the Auxiliary Building for both the initial release of the secondary side mass from the faulted SG and for the primary to secondary leakage.

This release path is conservative for the following reasons:

- No credit is taken for mixing and dilution within the volume in the Auxiliary Building. This is conservative as the available volume for mixing and dilution of the Auxiliary Building above the 715' floor elevation is greater than 700,000 ft^3.

- No credit is taken for surface deposition in the Auxiliary Building. The available surface areas in the Auxiliary Building above the 715' floor elevation is greater than 300,000 ft^2.

- No credit is taken for mixing and dilution in the common area of the Auxiliary Building. This is conservative as the CAAB is has a large volume. That is, the leakage from the faulted SG, after exiting the Auxiliary Building would enter the CAAB prior to release to the environment. The CAAB offers a potential large air volume for mixing and dilution that is not credited.

Intact SG Releases

To maximize the calculated doses it is assumed that offsite power is lost so that the main steam condensers are not available. Consequently, following the MSLB transient the plant must cool down by releasing secondary coolant via the power operated relief valve (PORV) for the intact SG. The steam release from the intact SG continues for 45.5 hours until the Residual Heat Removal (RHR) system is aligned and in service. During the 45.5 hours before the RHR system is initialized, the RCS is assumed to leak into the intact SG at 150 gpd (measured at 70°F). The RCS noble gas activity entering the intact SG via P-T-S leakage is assumed to be released directly to the environment without reduction or mitigation. The RCS iodine activity entering the intact SG via P-T-S leakage is assumed to be diluted within the intact SG liquid mass. An iodine partition coefficient of 10 (i.e., P-T-S leakage iodine retention in the intact SG) is conservatively assumed in lieu of the value of 100 recommended in Regulatory Guide 1.183, Appendix E, Section 5.5.4, to maximize the resulting dose. The P-T-S leakage noble gas & iodine activities and SG liquid iodine activity are assumed to be released to the environment at the SG steaming rates. As shown in Table 3.1-11, the Group 1 PORV to the CR air intake source/receptor pair has higher χ/Q values than the Group 2 PORV to CR intake source/receptor pair. Thus, the Group 1 PORV release is conservatively used for the intact SG

releases. Due to uncertainty associated with the progression of the accident and to provide operational flexibility during the event, it is assumed that the tubes in the intact SG are uncovered during the first two hours of the event and that all iodine activity in the P-T-S leakage in this 2 hour time interval is flashed into vapor without scrubbing through the SG liquid.

- Intact SG Via Safety & Power Operated Relief Valve (PORV) Group 1 Release

  Following the event the intact SG is used to cooldown the RCS. The mass of the steam released and the release location during the cooldown are important considerations due to the 150 gpd leakage assumed for the intact SG (maximum allowed by Technical Specification 3.4.14) (Reference 27). Assuming a loss of off-site power the unit would be cooled down using procedures for natural circulation. Per either procedure, the preferred means to release steam for the cooldown is by dumping steam to the condenser. If this path is not available, then the SG PORV is used. For consideration of doses to offsite locations and the Control Room operator, the SG PORV is limiting.

- Turbine Driven Auxiliary Feedwater (TDAFW) Pump Steam Exhaust Release

  An additional steam release path from the intact SG is through the Turbine Driven Auxiliary Feedwater Pump steam exhaust. Assuming a single failure that results in loss of the motor driven AFW Pump, the TDAFW Pump would be used for the cooldown. The total steam mass released by the TDAFW Pump steam exhaust, and the total steam mass released by the intact SGs are shown in Table 3.6-2.

Table 3.6-2
Steam Mass Releases

Time Interval	Total Steam Mass Release (lbm)	TDAFW Pump Steam Exhaust		Total Intact SG Mass Release (lbm)
		Steam Mass Release Rate (lbm/hr)	Steam Mass Release (lbm)	
0 – 2 hours	226,414	12,000	24,000	202,414
2 – 8 hours	406,952	11,000	66,000	340,952
8 – 24 hours	796,899	9,500	152,000	644,899
24 - 45.5 hours	863,053	9,000	193,500	669,553

The TDAFW steam mass release is included in the steam mass release from the intact SG via the Group 1 PORV, which is modeled with average χ/Qs that are determined by steam mass release weighting of the Group 1 PORV and TDAFW pump exhaust rates from Table 3.6-2. These average χ/Qs are shown in Table 3.6-3.

Table 3.6-3
Average Atmospheric Dispersion Factor (X/Q) for Intact Steam Release via PORV and TDAFW

Time Interval (hr)	Steam Release Location		Fraction of Steam Mass		Steam Mass Release Averaged χ/Qs (s/m^3) G=AxE+B*F
	AFW Exhaust χ/Qs (s/m^3) A	Group 1 PORV χ/Qs (s/m^3) B	Release From AFW Turbine E	Release From Intact SG PORV F	
0-2	4.66E-02	3.06E-02	0.106	0.894	3.23E-02
2 - 8	3.62E-02	2.46E-02	0.162	0.838	2.65E-02
8 - 24	1.55E-02	1.11E-03	0.191	0.809	1.19E-02
24 - 96	1.12E-02	7.76E-03	0.224	0.776	8.53E-03
96 - 720	9.95E-03	6.14E-03	0.224	0.776	6.99E-03

A from Table 3.1-12
B from Table 3.1-12
E & F from Table 3.5-1; 96 to 720 hours data set to 24 - 96 hours data with no impact since release stops at 45.5 hours

3.6.5 Assumptions and Inputs

3.6.5.1 Assumptions

Regulatory Guide 1.183 (Reference 4) provides guidance on modeling assumptions that are acceptable to the NRC staff for the evaluation of the radiological consequences of a MSLB. The applicability of these modeling assumptions to the PINGP MSLB analysis is described in the regulatory conformance tables in Attachment 4.

3.6.5.2 Input Parameters

Input parameters for the MSLB analysis are given in Table 3.6-4.

Table 3.6-4
MSLB Radiological Consequence Analysis Input Parameters

Input Parameter	CLB	AST	Justification for Change
Rated Thermal Power	1683 MWt	1,852 MW_t	Conservatism demonstrated in design analysis
RCS (iodine) specific activity in the Technical Specifications	0.5 μCi/gm DE Iodine-131	0.5 μCi/gm DE Iodine-131	No change
RCS specific activity in the proposed Technical Specifications	100/E-Bar	580 μCi/g DE of XE-133	TSTF-490 and demonstrated in design analysis
RCS specific activity permitted by the Technical Specifications	30 μCi/gm DE Iodine-131 at 100 percent rated thermal power	30 μCi/gm DE Iodine-131 at 100 percent rated thermal power	No change
Concurrent Iodine Spiking Factor	500	500	No change
Duration of concurrent iodine spike	8 hours	8 hours	No change
Secondary coolant (iodine) specific activity in the Technical Specifications	0.1 μCi/gm DE Iodine-131	0.1 μCi/gm DE Iodine-131	No change
Nominal reactor coolant system (RCS) volume	5,290 ft^3	5,290 ft^3	No change
RCS temperature & pressure	560^0F @ 2235 psia	560^0F @ 2235 psia	No change
Maximum allowed accident induced SG leak rate	1 gpm @ 70^0F	1 gpm @ 70^0F	No change
Faulted SG dryout time	< 2 minutes	600 seconds = 10 minutes	Conservatism demonstrated in design analysis
RCS iodine activity concentration based on 1% fuel defects	Table 3.2-8	Table 3.2-8	No change
RCS noble gas activity based on 1% fuel defects	Table 3.2-8	Table 3.2-8	No change
Steam Generator Liquid Mass U1 Framatome ANP Model 56/19 U2 Westinghouse Model 51	107,100 lbm @ Full Power 107,420 lbm @ Full Power	107,100 lbm @ Full Power 107,420 lbm @ Full Power	No change
SG saturated pressure at hot full power	806.8 psia – Unit 1 728 psia – Unit 2	806.8 psia – Unit 1 728 psia – Unit 2	No change

Input Parameter	CLB	AST	Justification for Change
Auxiliary feedwater pump turbine steam release rate	Not Modeled	12,000 lbm/hr 0-2 hrs 11,000 lbm/hr 2-8 hrs 9,500 lbm/hr 8-24 hrs 9,000 lbm/hr 24-45.5 hrs	Conservatism justified in the analysis.
Steam mass released from faulted SG to the environment	107,100 lbm (Unit 1 SG) 107,420 lbm (Unit 2 SG)	107,100 lbm (Unit 1 SG) 107,420 lbm (Unit 2 SG)	No change
RCS leakage to faulted SG	0.104 gpm (= 150 gallons/day at assumed measured density of 1.0 gm/cc (62.4 lb/ft^3)	0.104 gpm (= 150 gallons/day at assumed measured density of 1.0 gm/cc (62.4 lb/ft^3)	No change
Termination of release from faulted SG	8 hours	75 hours	Conservatism justified in the analysis.
Termination of release from intact SG	8 hours	45.5 hours	Conservatism justified in the analysis.
Steam mass released from intact SG to the environment 0 – 2 hr 2 – 8 hr 8 – 24 hr 24 hr – 45.5 hr	254,400 lbm 486,000 lbm	226,414 lbm 406,952 lbm 796,899 lbm 863,053 lbm	Higher steam mass releases based on longer cooldown times
Intact SG liquid iodine partition coefficient	100	10	Conservatism demonstrated in design analysis
Letdown system flow rate	90 gpm	88 gpm (80 gpm + 10%)	Based on orfice design
Allowable RCS leakage during normal operation	10 gpm (identified) 1 gpm (unidentified) 150 gpd (P-T-S leakage)	10 gpm (identified) 1 gpm (unidentified) 150 gpd (P-T-S leakage)	No change
Letdown system temperature	100^{0}F	100^{0}F	No change
Control Room Parameters	Table 3.2-1	Table 3.2-1	Discussed in Table 3.2-1
Unit 1 CR air intake χ/Qs for Unit 1 ADV / Aux Feedwater Turbine Exhaust release	Release points and associated χ/Q values are described in Reference 15.	Table 3.1-12	Refer to discussion in Section 3.1.3.
Unit 2 CR air intake χ/Qs for Common Area of Auxiliary Building Release – Faulted SG		Table 3.1-12	Refer to discussion in Section 3.1.3.
Unit 2 CR air intake χ/Qs for Unit 2 Safety & Relief Valve Group 1 Release – Intact SG		Table 3.1-12	Refer to discussion in Section 3.1.3.

3.6.6 Summary and Conclusions

The post-MSLB EAB, LPZ, and CR doses are summarized in the following tables.

Table 3.6-5
MSLB Accident – Preaccident Iodine Spike
TEDE Dose (Rem)

	Control Room	EAB	LPZ
P-T-S Iodine Release Faulted SG	1.16E-01	2.63E-02 (occurs at t = 24.0 hrs)	1.57E-02
Dryout SG Liquid Iodine Release Faulted SG	8.75E-02	3.18E-02 (occurs at t = 0.0 hrs)	8.68E-03
P-T-S NG Release Faulted SG	1.85E-03	1.43E-03 (occurs at t = 0.0 hrs)	1.68E-03
P-T-S Iodine Release Intact SG	2.82E-01	1.10E-02 (occurs at t = 0.0 hrs)	9.52E-03
Liquid Iodine Release Intact SG	2.64E-01	4.05E-02 (occurs at t = 0.0 hrs)	1.14E-02
P-T-S Noble Gas Release Intact SG	1.22E-03	1.48E-04 (occurs at t = 0.0 hrs)	1.69E-04
External Cloud*	3.70E-02	0.00E+00	0.00E+00
CR Filter Shine*	4.71E-02	0.00E+00	0.00E+00
Total	8.37E-01	1.11E-01	4.71E-02
Allowable TEDE Limit	**5.00E+00**	**2.50E+01**	**2.50E+01**

* Post-LOCA External Cloud & CR Filter Shine Doses Used from Section 3.3

Table 3.6-6
MSLB Accident – Concurrent Iodine Spike
TEDE Dose (Rem)

	Control Room	EAB	LPZ
P-T-S Iodine Release Faulted SG	1.13E+00	3.53E-01 (occurs at t = 24.0 hrs)	1.47E-01
Dryout SG Liquid Iodine Release Faulted SG	8.75E-02	3.18E-02 (occurs at t = 0.0 hrs)	8.68E-03
P-T-S NG Release Faulted SG	1.52E-03	9.55E-04 (occurs at t = 2.6 hrs)	1.36E-03
P-T-S Iodine Release Intact SG	2.68E+00	1.23E-01 (occurs at t = 24.0 hrs)	8.99E-02
Liquid Iodine Release Intact SG	2.64E-01	4.05E-02 (occurs at t = 0.0 hrs)	1.14E-02
P-T-S Noble Gas Release Intact SG	9.82E-04	9.96E-05 (occurs at t = 2.6 hrs)	1.36E-04
External Cloud*	3.70E-02	0.00E+00	0.00E+00
CR Filter Shine*	4.71E-02	0.00E+00	0.00E+00
Total	4.25E+00	5.49E-01	2.58E-01
Allowable TEDE Limit	**5.00E+00**	**2.50E+00**	**2.50E+00**

* Post-LOCA External Cloud & CR Filter Shine Doses Used from Section 3.3

The results of analyses indicate that the EAB, LPZ, and CR doses are within allowable limits for the postulated MSLB. The MSLB analysis is provided in Attachment 9.

3.7 Steam Generator Tube Rupture Radiological Assessment

The Steam Generator Tube Rupture (SGTR) is defined as the rupture of a single Steam Generator (SG) tube. The consequence of this event is a transfer of RCS fluid to the secondary side of the SG; which continues until operator action is taken to stop the flow through the ruptured tube using established procedures. Consistent with the current licensing basis, it is assumed that the flow through the ruptured SG tube is stopped within 30 minutes following the initiation of the event.

The need for the operator to take timely action following a SGTR is discussed in the PINGP USAR (Reference 5), Section 14.5. The USAR, Section 14.5.4.1 states:

> The main objective of the operator is to determine that a steam generator tube rupture has occurred, to identify and isolate the ruptured steam generator on a restricted time scale in order to minimize contamination of the secondary system and to ensure termination of radioactive release to the atmosphere from the ruptured unit. The recovery procedure can be carried out in a time scale which ensures that break flow to the secondary system is terminated before water level in the affected steam generator rises into the main steam pipe. Sufficient indications and controls are provided to enable the Operator to carry out these functions satisfactorily. Consideration of the indications provided at the Control Board together with the magnitude of the break flow, leads to the conclusion that the isolation procedure can be completed within approximately 30 minutes of accident initiation.
>
> The 30 minute time frame is not a strict acceptance criteria. The acceptance criteria are the basis for the 30 minute time frame. The acceptance criteria are two fold:
>
> 1. To prevent the water level in the Steam Generator from rising into the Main Steam pipe (i.e., ensure that the ruptured Steam Generator does not become flooded).
>
> 2. To maintain offsite dose level acceptable values. The offsite dose is directly related to the activity transferred to the secondary side of the ruptured Steam Generator."

Assessments have been performed to provide reasonable assurance that the ruptured Steam Generator would not be overfilled during this event. These assessments are performed as follows:

- The plant simulator was used to determine times that it takes operators to perform various steps in the Emergency Operating Procedure (EOP) E-3

for a SGTR. The SGTR was run for several operations crews to obtain a range of times.

- The times were then combined with the design basis flow rates to demonstrate that the operators would be able to isolate the ruptured SG prior to overfill occurring.

- Several conservative assumptions were used in these assessments, including the following:

    - A conservatively high initial inventory in the ruptured Steam Generator was assumed. This results in a conservatively low free volume to accommodate the rupture flow prior to overfill.

    - A conservatively high rupture flow rate was determined. The rupture flow rate was held constant. In reality, per the EOPs, the RCS pressure is decreased to stop the rupture flow. As the RCS pressure is decreased, the pressure differential across the ruptured tube is decreased. Accordingly, one would expect the rupture flow to decrease as the pressure differential across the ruptured tube is reduced. This is not credited in determining the rupture flow.

    - In addition to the flow from the RCS through the ruptured tube adding mass to the secondary side of the SG, the Auxiliary Feedwater (AFW) System pumps are also adding mass to the secondary side of the ruptured SG. This occurs until the AFW is isolated from the ruptured SG per the applicable EOP. Prior to isolation, a conservatively high AFW flow rate was assumed.

Accounting for the conservatisms, the assessments demonstrate that the operators can implement the required actions per the EOPs in sufficient time to preclude overfill of the ruptured SG. No changes are being made as part of this AST analyses and licensing submittal that would invalidate the above assessment.

It should be noted that as part of the operator response in the EOPs potential release paths from the ruptured SG are isolated prior to completing the cooldown and depressurization. Thus, the dose consequences due to steam release from the ruptured SG would be secured well before the RCS flow through the ruptured SG tube is secured. This would indicate that the 30 minute time period used in the radiological consequence analysis is conservative. The radiological dose consequence analysis is addressed below.

3.7.1 Methodology Overview

The design basis SGTR accident is analyzed using a conservative set of assumptions and as-built design inputs. The numeric values of the critical design

inputs are conservatively selected to assure an appropriate prudent safety margin against unpredicted events in the course of an accident and compensate for large uncertainties in facility parameters, accident progression, radioactive material transport, and atmospheric dispersion. The SGTR analysis is performed using the guidance in Regulatory Guide 1.183 and its Appendix F.

For PINGP, no fuel damage is predicted to occur for the SGTR. Per Regulatory Guide 1.183 (Reference 4, Appendix F, Section 2.0), if no or minimal fuel damage is postulated for the SGTR event, then the activity released should be the maximum coolant activity allowed by the Technical Specifications, and two cases of iodine spiking corresponding to a pre-accident iodine spike and a concurrent iodine spike should be assumed.

Pre-accident Iodine Spike Release
In the pre-accident iodine spike release scenario, a reactor transient has occurred prior to the postulated SGTR accident and has raised the Reactor Coolant System (RCS) iodine concentration to the maximum value permitted by technical specifications. The RCS iodine concentration of 30 μCi/g Dose Equivalent (DE) I-131 is obtained from Figure 3.4.17-1 of the Technical Specifications.

Concurrent Accident Iodine Spike Release
The primary system transient associated with the SGTR causes an iodine spike in the primary system. The increase in primary coolant iodine concentration is estimated using a spiking model that assumes that the iodine release rate from the fuel rods to the primary coolant (expressed in curies per unit time) increases to a value 335 times greater than the release rate corresponding to the iodine concentration at the equilibrium value of 0.50 μCi/gm DE I-131 specified in technical specifications. The assumed iodine spike duration should be 8 hours (Reference 4, Appendix F, Section 2.2).

The isotopic iodine appearance rates are calculated using the same methodology described in Section 3.6.1 except (consistent with Regulatory Guide 1.183, Appendix F, Section 2.2) a release rate increase of 335 times is used in lieu of the increase of 500 times described in Section 3.6.1.

3.7.2 Analytical Model

The RADTRAD computer code is used to determine the SGTR accident doses at the EAB, LPZ and Control Room, consistent with Regulatory Guide 1.183. Models were designed for two different release paths; i.e.,

- The ruptured SG PORV / TDAFW Pump steam exhaust, and
- The intact SG PORV / TDAFW Pump steam exhaust

Note that both the ruptured SG and the intact SG exhaust steam to a common TDAFWP steam exhaust.

Following a SGTR it is assumed that it takes 30 minutes to isolate and stop flow from the ruptured SG. At this point, steam release from the ruptured SG is terminated. The 30 minute time frame assumption for isolation and stopping flow from the ruptured SG is consistent with the current licensing basis for PINGP. The 30 minute time frame assumption is used to determine the total mass transferred from the RCS to the secondary side of the ruptured SG. It is noted that the determination of the mass flow rate, conservatively, does not credit the reduced mass transfer rate as the RCS pressure is reduced.

Following a SGTR, it is assumed that it takes 14 hours to cool down to the point where shutdown cooling (RHR System) is placed into operation. The 14 hour time frame is based on an assessment of the required actions in the Emergency Operating Procedures (EOPs) and using conservative assumptions for cooldown rates. At this point steam releases from the intact SG are terminated.

To summarize, the steam release through the ruptured SG and the intact SG are assumed to last for the following time periods.

- 0 to 30 minutes Steam Release from Ruptured SG
- 0 to 14 hours Steam Release from Intact SG

A schematic of the analytical model is provided in Figure 3.7-1.

Figure 3.7-1
SGTR RADTRAD Model

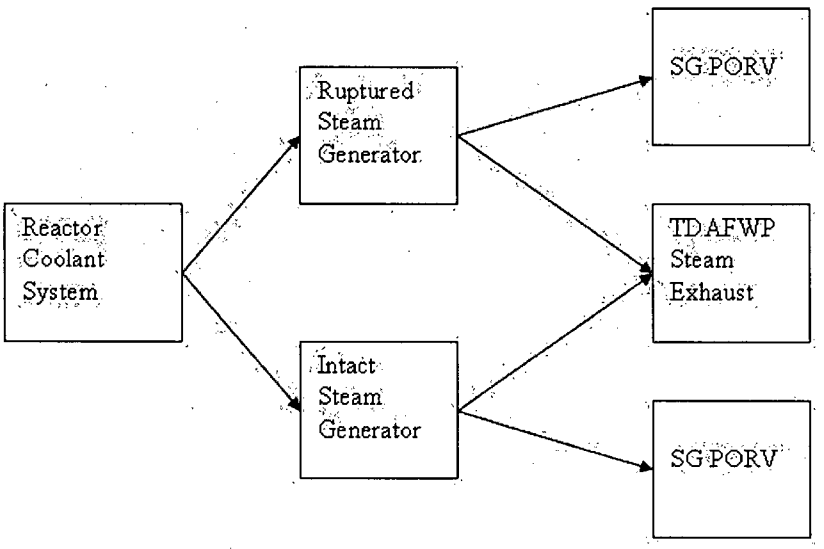

3.7.3 Radiological Source Term

For this analysis only the iodine and noble gas activities, which are conservatively characterized by operation with 1% core fuel defects and the equilibrium and spiked release rates from that fuel, define the source terms. RADTRAD uses these activities, in curies per megawatt, and then applies nuclide release fractions and a specified core power to calculate the source term for a given case. The AST release fractions associated with iodines and noble gases are assumed to be 100% for the 1% of the fuel with defects, and are released to the reactor coolant system.

No additional fuel damage is assumed due to this accident. In accordance with regulatory guidance, as previously described, two different cases of iodine spiking are analyzed.

3.7.3.1 Reactor Coolant System Source Term

3.7.3.1.1 RCS Iodine Concentrations

Table 3.2-10 shows the calculation for the RCS iodine concentration, based on Thyroid DCFs, for a Pre-existing Iodine Spike.

For the accident-induced iodine spike, the iodine release rates corresponding to a RCS concentration of 0.50 μCi/gm DE I-131 are calculated using methodology described in Section 3.6.2. The release rates are then multiplied by the RCS mass and a factor of 335 to yield a release rate in units of Ci/minute. Based on the release rate and assuming an eight (8) hour duration a total iodine release is determined. Table 3.7-1 shows the total accident induced iodine spike activity.

Table 3.7-1
RCS Iodine Inventory Due to Accident-Induced Spike
(335x Release Rate)

Isotope	AST Appearance Rate (Ci/sec)	AST Total Iodine Activity Released (Ci)
I-131	1.123	3.233E+04
I-132	3.005	8.654E+04
I-133	1.953	5.626E+04
I-134	1.230	3.542E+04
I-135	1.443	4.156E+04

3.7.3.1.2 RCS Noble Gas Concentrations

Table 3.2-8 shows the calculation for the RCS noble gas concentration for 1% failed fuel.

3.7.3.1.3 RCS Cesium and Rubidium Concentrations

As described in Section 3.2.3.4.4.4, Cesium and Rubidium are not included in the RCS source term for the SGTR.

3.7.3.2 Secondary System Source Terms

3.7.3.2.1 Secondary System Iodine Concentrations

The secondary systems iodine concentrations corresponding to the Technical Specification limit of 0.10 μCi/gm are given in Table 3.2-11.

3.7.4 Radiological Release Paths

The activity transport paths from the ruptured and intact SGs are described below. These activity transport paths are applicable to both the pre-accident and concurrent iodine spike cases.

Ruptured SG Releases

Following a SGTR, RCS fluid flows through the ruptured SG tube to the secondary side of the SG. Steam released from the secondary side of the SG will be a potentially significant contributor to the dose consequences. Two different time scenarios are considered when determining the steam mass releases from the ruptured SG.

- Pre-Reactor Trip Steam Flow – The pre-reactor trip steam flow is the steam mass released from the ruptured SG following the initiation of the ruptured tube flow to the point where the reactor trip signal is initiated. During this time period, steam flow is released to the condenser.

- Post-Reactor Trip Steam Flow – The post-reactor trip steam flow is the steam mass released from the ruptured SG subsequent to the reactor trip. To maximize the offsite doses it is assumed that offsite power is lost so that the main steam condensers are not available. During this time period, stream flow from the ruptured SG is released via the associated PORV and the TDAFWP steam exhaust.

It is assumed that the ruptured SG is isolated within 30 minutes following the initiation of the event. This includes stopping the flow of RCS to the secondary side of the SG and stopping steam release from the ruptured SG.

Intact SG Release Paths

To maximize the calculated doses it is assumed that offsite power is lost so that the main steam condensers are not available. Consequently, following the SGTR transient the plant must cool down by releasing secondary coolant via the power operated relief valve (PORV) for the intact SG. The steam release from the intact SG continues for 14 hours (from the initiation of the event) until the Residual Heat Removal (RHR) system is aligned and in service. During the 14 hours before the RHR system is initialized, the RCS is assumed to leak into the intact SG at 150 gpd (measured at 70°F). The RCS iodine activity entering the intact SG via P-T-S leakage is assumed to be diluted within the intact SG liquid mass. An iodine partition coefficient of 100 is used (i.e., P-T-S leakage iodine retention in the intact SG). The P-T-S leakage noble gas & iodine activities and SG liquid

iodine activity are assumed to be released to the environment at the intact SG steaming rates.

Table 3.7-2 summarizes the steam mass release points following a SGTR.

Table 3.7-2
SGTR Steam Release Locations

Time Period	Ruptured SG	Intact SG
0 – 30 minutes	Group 1 PORV and TDAFWP Steam Exhaust	Group 1 PORV and TDAFWP Steam Exhaust
30 minutes – 2 hours	None	Group 2 PORV and TDAFWP Steam Exhaust
2 – 8 hours	None	Group 2 PORV and TDAFWP Steam Exhaust
8 – 14 hours	None	Group 2 PORV and TDAFWP Steam Exhaust

The time periods shown in Table 3.7-2 are consistent with the time periods used to determine the steam mass releases.

Mass transfer from the RCS to the secondary side of the ruptured SG is calculated for time periods prior to the reactor trip (referred to as Pre-Trip) and subsequent to the reactor trip (Post-Trip). The mass transfer and release from the ruptured SG prior to the reactor trip is released to the condenser and is not considered in the post-SGTR release to the environment due to the tortuous path to the condenser via the turbines and moisture separators, and condenser hold-up time.

Table 3.7-3 shows the calculated steam mass release from the ruptured SG. Table 3.7-4 shows the calculated steam mass release from the intact SG.

Table 3.7-3
Steam Mass Releases From Ruptured SG PORV & TDAFW Pump Exhaust

End of Time Interval (hr) T	Post-SGTR Steam Mass Release (lbm) A	Auxiliary Feedwater Turbine		Ruptured SG PORV Mass Release (lbm) D=A-C	Fraction of Steam Mass	
		Steam Mass Release Rate (lbm/hr) B	Total Steam Mass Release (lbm) C		Release From AFW Turbine E=C/A	Release From Ruptured SG PORV F=D/A
0.5	80,500	12,000	6,000	74,500	0.075	0.925

A = 80,500 lbm - 0-30 minutes Steam Releases From Ruptured SG (Post-Trip)

Table 3.7-4
Steam Mass Releases From Intact SG PORV & TDAFW Pump Exhaust

End of Time Interval (hr) T	Post-SGTR Steam Mass Release (lbm) A	Auxiliary Feedwater Turbine		Intact SG PORV Mass Release (lbm) D=A-C	Fraction of Steam Mass	
		Steam Mass Release Rate (lbm/hr) B	Total Steam Mass Release (lbm) C		Release From AFW Turbine E=C/A	Release From Intact SG PORV F=D/A
2	237,100	12,000	24,000	213,100	0.101	0.899
8	569,000	12,000	72,000	497,000	0.127	0.873
14	416,000	12,000	72,000	344,000	0.173	0.827

The TDAFW steam mass release is included in the steam mass release from both the ruptured and the intact SG PORV, which is modeled with average χ/Qs that are determined by steam mass release weighting of the associated SG PORV and TDAFW pump exhaust rates as shown in Tables 3.7-5 and 3.7-6.

Table 3.7-5
Average Units 1 & 2 Atmospheric Dispersion Factor (χ/Q) for Ruptured & Intact SG Steam Release via PORV1 and TDAFW

Time Interval (hr)	Unit 1 Steam Release Location		Unit 2 Steam Release Location		Fraction of Steam Mass		Weighted Average Mass Release	
	ADV/AFW Exhaust χ/Qs (s/m^3) A	Group 1 PORV χ/Qs (s/m^3) B	ADV/AFW Exhaust χ/Qs (s/m^3) C	Group 1 PORV χ/Qs (s/m^3) D	Release Fraction From AFW Turbine E	Release Fraction From Intact SG PORV F	Unit 1 χ/Qs (s/m^3) G=AxE+BxF	Unit 2 χ/Qs (s/m^3) H=CxE+DxF
0-0.5	4.66E-02	1.87E-02	9.89E-03	3.06E-02	0.075	0.925	2.08E-02	2.91E-02

A from Table 3.1-12
B from Table 3.1-12
C from Table 3.1-12
D from Table 3.1-12
E & F from Table 3.7-3

Table 3.7-6
Average Units 1 & 2 Atmospheric Dispersion Factor (χ/Q) for Intact SG Steam Release via PORV2 and TDAFW

Time Interval (hr)	Unit 1 Steam Release Location		Unit 2 Steam Release Location		Fraction of Steam Mass		Weighted Average Mass Release	
	ADV/AFW Exhaust χ/Qs (s/m³) A	Group 2 PORV χ/Qs (s/m³) B	ADV/AFW Exhaust χ/Qs (s/m³) C	Group 2 PORV χ/Qs (s/m³) D	Release Fraction From AFW Turbine E	Release Fraction From Intact SG PORV F	Unit 1 χ/Qs (s/m³) G=AxE+BxF	Unit 2 χ/Qs (s/m³) H=CxE+DxF
0.5-2	4.66E-02	1.89E-03	9.89E-03	2.47E-03	0.101	0.899	6.42E-03	3.22E-03
2-8	3.62E-02	1.35E-03	7.51E-03	1.97E-03	0.127	0.873	5.76E-03	2.67E-03
8-14	1.55E-02	5.33E-04	3.29E-03	8.76E-04	0.173	0.827	3.12E-03	1.29E-03

A from Table 3.1-12
B from Table 3.1-12
C from Table 3.1-12
D from Table 3.1-12
E & F from Table 3.7-4

3.7.5 Assumptions and Inputs

3.7.5.1 Assumptions

Regulatory Guide 1.183 (Reference 4) provides guidance on modeling assumptions that are acceptable to the NRC staff for the evaluation of the radiological consequences of a SGTR. The applicability of these modeling assumptions to the PINGP SGTR analysis is described in the regulatory conformance tables in Attachment 4.

3.7.5.2 Input Parameters

Input parameters for the SGTR analysis are given in Table 3.7-7. The CLB analysis for the SGTR is described in the USAR. The analysis description is consistent with that contained in the original FSAR.

Table 3.7-7
SGTR Radiological Consequence Analysis Input Parameters

Input Parameter	AST	Justification
Rated Thermal Power	1,852 MW_t	Same as MSLB
RCS Iodine activity	0.5 μCi/gm DE Iodine-131	Same as MSLB
RCS Noble Gas activity	580 μCi/g DE of XE-133	Same as MSLB
RCS Maximum Iodine activity	30 μCi/gm DE Iodine-131 at 100 percent rated thermal power	Same as MSLB
Concurrent Iodine Spiking Factor	335	RG 1.183, Appendix F
Duration of concurrent iodine spike	8 hours	Same as MSLB
Secondary coolant (iodine) specific activity in the Technical Specifications	0.1 μCi/gm DE Iodine-131	Same as MSLB
Nominal reactor coolant system (RCS) volume	5,290 ft^3	Same as MSLB
RCS temperature & pressure	560^0F @ 2235 psia	Same as MSLB
RCS iodine activity concentration based on 1% fuel defects	Table 3.2-8	Same as MSLB
RCS noble gas activity based on 1% fuel defects	Table 3.2-8	Same as MSLB
Steam Generator Liquid Mass U1 Framatome ANP Model 56/19 U2 Westinghouse Model 51	 107,100 lbm @ Full Power 107,420 lbm @ Full Power	Same as MSLB
SG saturated pressure at hot full power	806.8 psia – Unit 1 728 psia – Unit 2	Same as MSLB

Input Parameter	AST	Justification
Primary Coolant Released to Ruptured SG Reactor Trip Time Total Break Flow Pre-Trip Break Flow with Flashing Post-Trip Break Flow with Flashing Pre-Trip Flashed Break Flow Post-Trip Flashed Break Flow	 172 seconds 140,000 lbm 14,600 lbm 125,400 lbm 2,630 lbm 15,050 lbm	Results from recent Westinghouse SGTR analysis to determine primary-to-secondary break flows and atmospheric steam releases.
Termination of release from ruptured SG	30 minutes	Current PINGP Licensing Basis.
Steam mass released from ruptured SG to the environment (0-0.5 hr)	80,500 lbm	Results from recent Westinghouse SGTR analysis to determine primary-to-secondary break flows and atmospheric steam releases.
Auxiliary feedwater pump turbine steam release rate	12,000 lbm/hr for entire duration of 0 – 14 hours	Conservative assumption based on maximizing AFW steam exhaust.
RCS leakage to intact SG	0.104 gpm (= 150 gallons/day at assumed measured density of 1.0 gm/cc (62.4 lb/ft^3)	Same as MSLB
Termination of release from intact SG	14 hours	Conservative assessment of EOPs for SGTR
Steam mass released from intact SG to the environment 0 – 2 hr 2 – 8 hr 8 – 14 hr	 237,100 lbm 569,000 lbm 416,000 lbm	Results from recent Westinghouse SGTR analysis to determine primary-to-secondary break flows and atmospheric steam releases.
Intact SG liquid iodine partition coefficient	100	RG 1.183
Letdown system flow rate	88 gpm (80 gpm + 10%)	Same as MSLB
Allowable RCS leakage during normal operation	10 gpm (identified) 1 gpm (unidentified) 150 gpd (SG tube leakage)	Same as MSLB
Letdown system temperature	100^{0}F	Same as MSLB
Control Room Parameters	Table 3.2-1	Same as MSLB
Unit 1 CR air intake χ/Qs for Unit 1 ADV / Aux Feedwater Turbine Exhaust release	Table 3.1-12	Conservative atmospheric dispersion factors.
Unit 2 CR air intake χ/Qs for Unit 2 Safety & Relief Valve Group 1 Release – Ruptured SG	Table 3.1-12	Conservative atmospheric dispersion factors.

Input Parameter	AST	Justification
Unit 2 CR air intake χ/Qs for Unit 2 Safety & Relief Valve Group 2 Release – Intact SG	Table 3.1-12	Conservative atmospheric dispersion factors.

3.7.6 Summary and Conclusions

The post-SGTR EAB, LPZ, and CR doses are summarized in the Tables 3.7-8 and 3.7-9.

Table 3.7-8
SGTR Accident – Preaccident Iodine Spike
TEDE Dose (Rem)

	Control Room	EAB	LPZ
P-T-S Iodine Release	3.92E+00	9.43E-01 (occurs at t = 0 hrs)	2.58E-01
SG Liquid Iodine Release	8.10E-03	1.63E-03 (occurs at t = 0.0 hrs)	1.20E-03
Noble Gas Release	4.37E-01	1.46E-01 (occurs at t = 0.0 hrs)	3.99E-03
External Cloud*	4.51E-02	0.00E+00	0.00E+00
CR Filter Shine*	2.33E-02	0.00E+00	0.00E+00
Total	4.43E+00	1.09E+00	2.99E-01
Allowable TEDE Limit	**5.00E+00**	**2.50E+01**	**2.50E+01**

* Post-LOCA External Cloud & CR Filter Shine Doses Used from Section 3.3

Table 3.7-9
SGTR Accident – Concurrent Iodine Spike
TEDE Dose (Rem)

	Control Room	EAB	LPZ
P-T-S Iodine Release	3.18E+00	9.39E-01 (occurs at t = 0 hrs)	2.62E-01
SG Liquid Iodine Release	8.10E-03	1.63E-03 (occurs at t = 0.0 hrs)	1.20E-03
Noble Gas Release	3.54E-02	2.08E-02 (occurs at t = 2.6 hrs)	5.76E-03
External Cloud*	4.51E-02	0.00E+00	0.00E+00
CR Filter Shine*	2.33E-02	0.00E+00	0.00E+00
Total	3.29E+00	9.61E-01	2.69E-01
Allowable TEDE Limit	**5.00E+00**	**2.50E+00**	**2.50E+00**

* Post-LOCA External Cloud & CR Filter Shine Doses Used from Section 3.3

The results of analyses indicate that the EAB, LPZ, and CR doses are within allowable limits for the postulated SGTR. The SGTR analysis is provided in Attachment 10.

3.8 Control Rod Ejection Accident

The Control Rod Ejection Accident (CREA) is defined as the mechanical failure of a control rod mechanism pressure housing resulting in the ejection of a Rod Control Assembly (RCCA) and drive shaft. The consequence of this mechanical failure is a rapid positive reactivity insertion together with an adverse core power distribution, possibly leading to localized fuel rod damage.

3.8.1 Methodology Overview

An analysis of the effects of a postulated rod ejection accident is performed using the assumptions of Regulatory Guide (RG) 1.183. For the analysis, it is assumed that prior to the postulated accident, the plant is operating at an equilibrium level of radioactivity in the primary and secondary systems as a result of coincident fuel defects and SG tube leakage. Following a postulated rod ejection accident, two activity release paths contribute to the total radiological consequences of the accident. The first release path is via Containment leakage resulting from release of activity from the primary coolant to the Containment. The release path from containment is the same as that modeled for the post-LOCA containment release in Section 3.3. The second path is the contribution of steam in the secondary system dumped through the SG PORVs and Turbine Driven Auxiliary Feedwater Pump steam exhaust since offsite power is assumed to be lost.

3.8.2 Analytical Model

It is assumed that prior to the accident the plant has been operating with simultaneous fuel defects and SG tube leakage for a period of time sufficient to establish equilibrium levels of activity in the primary and secondary coolant.

The model for the activity available for leakage from the Containment assumes that the activity in the fuel pellet-clad gap and the activity released due to fuel melting are instantaneously mixed in the Containment and available for release. All of the gap activity of the fuel rods failed by the accident is assumed to be released to the Containment. Of the fuel that is melted, 100 percent of the noble gases and 25 percent of the iodines are assumed available for leakage from the Containment. The only removal processes considered for the Containment are radioactive decay and leakage.

The model for the activity available for release to the atmosphere from the SG PORVs and TDAFW Pump steam exhaust assumes that the release consists of the activity in the secondary coolant prior to the accident plus that activity leaking from the primary coolant through the SG tubes following the accident. The primary coolant activity after the accident is assumed to be composed of the following.

- The equilibrium activity in the RCS prior to the accident, plus
- 100 percent of the noble gases and iodines released from the gap of the fuel failed during the accident, plus

- 100 percent of the noble gases and 50 percent of the iodines released by fuel melted by the accident.

The leakage of primary coolant to the secondary side of the SG is assumed to continue at its initial rate, assumed to be the same rate as the leakage prior to the accident, until the pressures in the primary and secondary systems are equalized. This occurs when the shutdown cooling system (RHR System) is placed into service. No mass transfer from the primary system to the secondary system is assumed thereafter.

Since a coincident loss of offsite power is assumed, activity is assumed to be released to the atmosphere through the SG PORVs and TDAFW Pump steam exhaust and not the main condenser.

The two release pathways are shown below.

Figure 3.8-1
CREA Analysis Model

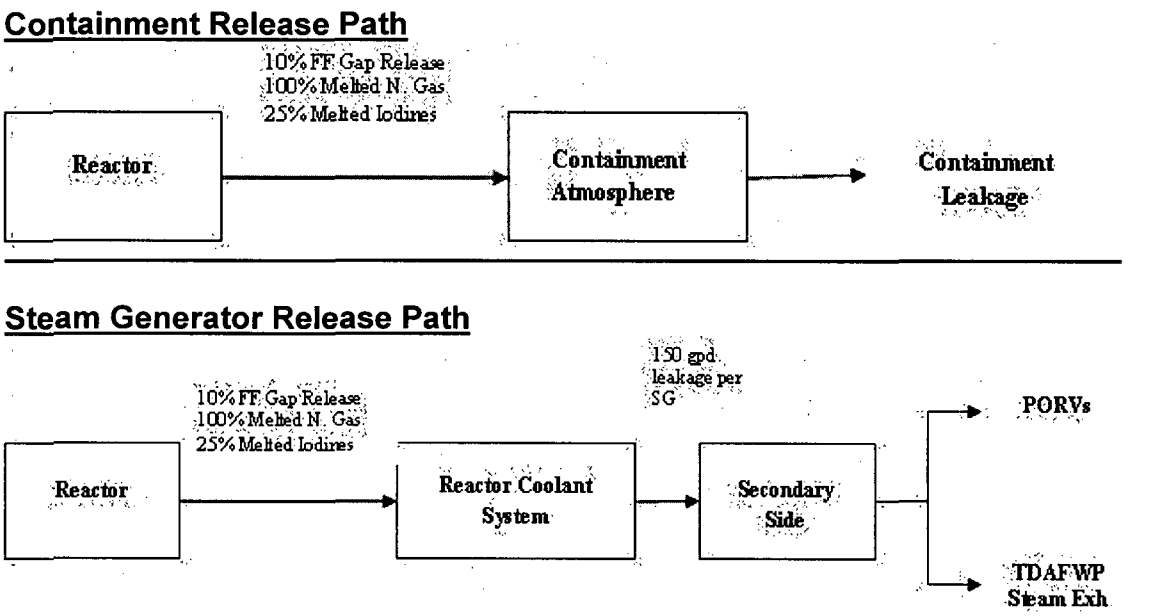

3.8.3 Radiological Source Term

The sudden rod ejection and localized temperature spike associated with the CREA results in 10% of the fuel assemblies that exceed departure from nucleate boiling (DNB). Furthermore, 0.25% reaches temperatures where fuel melting could occur. Therefore for both cases, the source term available for release is associated with this fraction of melted fuel and the fraction of core activity existing in the gap. The fuel damage percentages are taken at the acceptance criteria specified for the Control Rod Ejection transient analysis. The results from the Control Rod Ejection transient analysis are bounded by the associated

acceptance criteria. Therefore, using the transient analysis acceptance criteria as the inputs to the radiological dose consequence analysis is conservative.

Release fractions and transport fractions conform to Regulatory Guide 1.183, Appendix H. To conform to this regulatory guidance, 10% of the core inventory of iodine and noble gas is assumed to be in the fuel-clad gap.

With regard to the fraction released from melted fuel, it is assumed that 90% of the core inventory of iodine and noble gas remain available for release due to melting (i.e., these are the remaining fractions of activity that are not in the fuel-clad gap).

One hundred percent of the noble gases and iodines in the clad gaps of the fuel rods experiencing clad damage (assumed to be 10 percent of the rods in the core) are assumed to be released. The accident evaluation conservatively assumes this activity to be released twice: to the Containment for leakage to the atmosphere and to the primary coolant for leakage to the secondary system.

The fraction of fuel melting is assumed to be 0.25 percent of the core as determined by the following method:

- A conservative upper limit of 50 percent of rods experiencing clad damage may experience centerline melting (a total of 5 percent of the core).
- Of the rods experiencing centerline melting, only a conservative maximum of the innermost 10 percent of the volume actually melts (0.5 percent of the core could experience melting).
- A conservative maximum of 50 percent of the axial length of the rod would experience melting due to the power distribution (0.5 of the 0.5 percent of the core = 0.25 percent of the core).

3.8.3.1 Reactor Core Releases

3.8.3.1.1 Release from Cladding Failures

Table 3.8-1 provides the radionuclides released from the gap of the 10% failed fuel based on a power level of 1683 MWt. The curies are then divided by the power level to obtain Ci/MWt for input to the RADTRAD computer code. A separate input to the code is the power level. In this case, 1852 MWt is used to bound the expected EPU conditions.

Release fractions and transport fractions are consistent with Regulatory Guide 1.183, Appendix H. To conform with this regulatory guidance, 10% of the core inventory of iodine and noble gas is assumed to be in the fuel gap.

Table 3.8-1
10% Failed Fuel Gap Release Source

Nuclide	Core Inventory at 1683 MWt (Ci)	10% Clad Failure Release at 1683 MWt (Ci) (*)
Kr-85	7.15E+05	7.15E+03
Kr-85m	1.08E+07	1.08E+05
Kr-87	2.12E+07	2.12E+05
Kr-88	2.82E+07	2.82E+05
Xe-131M	5.06E+05	5.06E+03
Xe-133	9.15E+07	9.15E+05
Xe-133M	2.86E+06	2.86E+04
Xe-135	2.07E+07	2.07E+05
Xe-135M	1.95E+07	1.95E+05
Xe-138	7.72E+07	7.72E+05
I-131	4.50E+07	4.50E+05
I-132	6.51E+07	6.51E+05
I-133	9.13E+07	9.13E+05
I-134	1.02E+08	1.02E+06
I-135	8.72E+07	8.72E+05

(*) 10% Clad Failure Release = Core Inventory * 10% Gap Activity * 10% Clad Failure

3.8.3.1.2 Release from Fuel Melt

Table 3.8-2 provides the radionuclides released as a result of the fuel melt.

Table 3.8-2
0.25% Core Melt Source

Nuclide	Core Inventory at 1683 MWt (Ci)	0.25% Core Melt Source at 1683 MWt (Ci) (*)
Kr-85	7.15E+05	1.788E+03
Kr-85m	1.08E+07	2.700E+04
Kr-87	2.12E+07	5.300E+04
Kr-88	2.82E+07	7.050E+04
Xe-131M	5.06E+05	1.265E+03
Xe-133	9.15E+07	2.288E+05
Xe-133M	2.86E+06	7.150E+03
Xe-135	2.07E+07	5.175E+04
Xe-135M	1.95E+07	4.875E+04
Xe-138	7.72E+07	1.930E+05
I-131	4.50E+07	2.813E+04
I-132	6.51E+07	4.069E+04
I-133	9.13E+07	5.706E+04
I-134	1.02E+08	6.375E+04
I-135	8.72E+07	5.450E+04

(*) 0.25% Core Melt Source = Core Inventory * 0.25% Core Melt

3.8.3.2 Reactor Coolant System Source Term

3.8.3.2.1 RCS Iodine Concentrations

The initial RCS iodine concentrations are assumed to be at the values corresponding to 1% failed fuel provided in Table 3.2-8.

3.8.3.2.2 RCS Noble Gas Concentrations

The initial RCS noble gas concentrations are assumed to be at the values corresponding to 1% failed fuel provided in Table 3.2-8.

3.8.3.2.3 RCS Cesium and Rubidium Concentrations

As described in Section 3.2.4.4.4, Cesium and Rubidium are not included in the RCS source term for the CREA.

3.8.3.3 Secondary System Source Terms

3.8.3.3.1 Secondary System Iodine Concentrations

The secondary systems iodine concentrations corresponding to the Technical Specification limit of 0.10 µCi/gm are given in Table 3.2-11.

3.8.4 Radiological Releases

In a CREA accident, nuclides released to the RCS from the fuel would be available for release to the environment through two pathways: (1) Releases into the containment and subsequent leakage to the environment; or, (2) Leakage to the environment via primary-to-secondary leakage and then steaming from the SGs. In order to bound the resultant doses from this accident, two cases are considered when analyzing the radioactive release:

- Scenario 1: Containment Building Leakage
  For this scenario, the ejected control rod is assumed to breach the reactor pressure vessel (RPV), effectively causing the equivalent of a small break loss of coolant accident. In this case, all activity from damaged fuel that has been mixed with the primary coolant of the reactor coolant system (RCS) leaks directly to the containment volume. This flashed release is assumed to instantaneously and homogeneously mix with the containment atmosphere and subsequently be available for release to the environment via the assumed containment leak rate limit as used for the LOCA analysis. Credit for mitigation of the release by containment spray is not taken. No credit is taken for plateout of iodine inside of containment.

- Scenario 2: Steam Generator PORV/TDAFW Pump Steam Exhaust Release
  All of the activity from damaged fuel is mixed with the RCS. The combined RCS activity then leaks to the secondary side through the steam generator (SG) tubes at a conservative rate of 150 gallons per day (150 gpd) for each Steam Generator. The activity is then available for release to the

environment by steaming of both SG PORVs and the TDAFW Pump Steam Exhaust.

This methodology maximizes the activity released to the environment. Therefore, certain secondary aspects of each scenario, which would be modeled if the scenarios were stand-alone methodologies, are not modeled. Specifically, the dose contribution of primary-to-secondary leakage and subsequent release to the environment via SG releases is not modeled for the Containment Building leakage scenario. Similarly, for the release through the Secondary Side scenario, the dose contribution of any release into the containment building and subsequent leakage to the environment is not modeled.

In reality, the release path would more likely be a combination of these two release pathways, but the radiological consequences would be limited by the total of the doses determined using the two independent scenarios.

3.8.4.1 Release from Containment Building Scenario

For this scenario, the ejected control rod is assumed to breach the reactor pressure vessel (RPV), effectively causing loss of coolant accident. In this case, all activity from damaged fuel that has been mixed with the primary coolant of the reactor coolant system (RCS) leaks directly to the containment volume. This flashed release is assumed to instantaneously and homogeneously mix with the containment atmosphere and subsequently be available for release to the environment via the assumed containment leak rate used in the LOCA analysis.

The total activity nuclides released to containment is the sum of the activity released from the fuel assemblies (Tables 3.8-1 and 3.8-2) and the activity in the RCS fluid (Table 3.2-9). The total activity released to the containment and available for release is presented in Table 3.8-3.

No releases from the secondary side are assumed in this scenario. The Ci/MWt values are used as input in the RADTRAD nuclide inventory file.

Table 3.8-3
Release from Containment Building Scenario
Total Activity Released into the Containment

Nuclide	10% Clad Failure Release (Ci)	0.25% Core Melt Release (Ci)	RCS Activity (Ci)	Total Activity Released to Containment (Ci)	Ci/MWt (Based on 1683 MWt)
Kr-83M	0	0	5.868E+01	5.868E+01	3.487E-02
Kr-85	7.15E+03	1.788E+03	1.632E+03	1.057E+04	6.280E+00
Kr-85m	1.08E+05	2.700E+04	2.380E+02	1.352E+05	8.036E+01
Kr-87	2.12E+05	5.300E+04	1.542E+02	2.652E+05	1.575E+02
Kr-88	2.82E+05	7.050E+04	4.326E+02	3.529E+05	2.097E+02
Xe-131M	5.06E+03	1.265E+03	3.069E+02	6.632E+03	3.941E+00
Xe-133	9.15E+05	2.288E+05	3.892E+04	1.183E+06	7.027E+02
Xe-133M	2.86E+04	7.150E+03	5.464E+02	3.630E+04	2.157E+01
Xe-135	2.07E+05	5.175E+04	1.234E+03	2.600E+05	1.545E+02
Xe-135M	1.95E+05	4.875E+04	7.515E+01	2.438E+05	1.449E+02
Xe-138	7.72E+05	1.930E+05	9.117E+01	9.651E+05	5.734E+02
I-131	4.50E+05	2.813E+04	3.817E+02	4.785E+05	2.843E+02
I-132	6.51E+05	4.069E+04	4.192E+02	6.921E+05	4.112E+02
I-133	9.13E+05	5.706E+04	5.808E+02	9.706E+05	5.767E+02
I-134	1.02E+06	6.375E+04	8.713E+01	1.084E+06	6.440E+02
I-135	8.72E+05	5.450E+04	3.293E+02	9.268E+05	5.507E+02

3.8.4.2 Release from Secondary Side Scenario

Activity that originates in the RCS is released to the secondary coolant by means of the primary-to-secondary coolant leak rate. This design basis leak rate value is 150 gallons per day (gpd) for each SG.

Releases to the environment are associated with the secondary coolant steaming from the SGs. Regulatory Guide 1.183 allows for a reduction in the amount of activity released to the environment based on partitioning of nuclides between the liquid and gas states of water for this release path. For iodine, the partition factor of 100 is consistent with Regulatory Guide 1.183. No particulates are assumed to be released. Because of their volatility, 100% of the noble gases are assumed to be released. The total activity released to the steam generators is presented in Table 3.8-4.

Table 3.8-4
Release from Secondary Side Scenario
Total Activity Released into the RCS
(Available for Release to Steam Generators)

Nuclide	10% Clad Failure Release (Ci)	0.25% Core Melt Release (Ci)	RCS Activity (Ci)	Total Activity Released to RCS (Ci)	Ci/MWt (Based on 1683 MWt)
Kr-83M	0	0	5.868E+01	5.868E+01	3.487E-02
Kr-85	7.15E+03	1.788E+03	1.632E+03	1.057E+04	6.280E+00
Kr-85m	1.08E+05	2.700E+04	2.380E+02	1.352E+05	8.036E+01
Kr-87	2.12E+05	5.300E+04	1.542E+02	2.652E+05	1.575E+02
Kr-88	2.82E+05	7.050E+04	4.326E+02	3.529E+05	2.097E+02
Xe-131M	5.06E+03	1.265E+03	3.069E+02	6.632E+03	3.941E+00
Xe-133	9.15E+05	2.288E+05	3.892E+04	1.183E+06	7.027E+02
Xe-133M	2.86E+04	7.150E+03	5.464E+02	3.630E+04	2.157E+01
Xe-135	2.07E+05	5.175E+04	1.234E+03	2.600E+05	1.545E+02
Xe-135M	1.95E+05	4.875E+04	7.515E+01	2.438E+05	1.449E+02
Xe-138	7.72E+05	1.930E+05	9.117E+01	9.651E+05	5.734E+02
I-131	4.50E+05	5.625E+04	3.817E+02	5.066E+05	3.010E+02
I-132	6.51E+05	8.138E+04	4.192E+02	7.328E+05	4.354E+02
I-133	9.13E+05	1.141E+05	5.808E+02	1.028E+06	6.106E+02
I-134	1.02E+06	1.275E+05	8.713E+01	1.148E+06	6.819E+02
I-135	8.72E+05	1.090E+05	3.293E+02	9.813E+05	5.831E+02

The Ci/MWt values are used as input in the RADTRAD nuclide inventory file.

Following a CREA, it is assumed that both SGs are intact and it takes 45.5 hours to cool down to the point where shutdown cooling (RHR System) is placed into operation. At this point steam releases from the SGs are terminated. The mass of the steam released and the release location during the cooldown are important considerations due to the 150 gpd leakage assumed for each intact SG (maximum allowed by Technical Specification 3.4.14) (Reference 27). Assuming a loss of off-site power the unit would be cooled down using procedures for cooling down using natural circulation. Per either procedure, the preferred means to release steam for the cooldown is by dumping steam to the condenser. If this path is not available, then the SG PORV is used. For consideration of dose to the Control Room operator, the SG PORV release path is limiting.

An additional steam release path is through the Turbine Driven Auxiliary Feedwater (TDAFW) Pump steam exhaust. Assuming a single failure that results in loss of the motor driven AFW Pump, the TDAFW Pump would be used for the cooldown.

The total steam mass released by the TDAFW Pump steam exhaust and steam mass released by the intact SGs are shown in Table 3.8-5.

Table 3.8-5
Steam Mass Releases

Time Interval	Total Steam Mass Release (lbm)	TDAFW Pump Steam Exhaust		Total Intact SG Mass Release (lbm)
		Steam Mass Release Rate (lbm/hr)	Steam Mass Release (lbm)	
0 – 2 hours	226,414	12,000	24,000	202,414
2 – 8 hours	406,952	11,000	66,000	340,952
8 – 24 hours	796,899	9,500	152,000	644,899
24 - 45.5 hours	863,053	9,000	193,500	669,553

For the purposes of the analysis, the TDAFW steam mass release is modeled with average χ/Qs that are determined by steam mass release weighting of the PORVs and TDAFW pump exhaust rates shown in Table 3.8-5. The average χ/Q values for Unit 1 and Unit 2 are shown in Tables 3.8-6 and 3.8-7, respectively. Per plant operating procedures, the PORVs would be used to minimize the pressure difference between the SGs to prevent uneven RCS temperature distributions. To be conservative the analysis assumes that the PORV closer to the Control Room vent intake is used to dump 60% of the total steam mass released from that SG and the other 40% is dumped from the other SG PORV.

Table 3.8-6
Average Unit 1 Atmospheric Dispersion Factor (χ/Q) for Intact Steam Release via PORV and TDAFW

Time Interval (hr)	Unit 1 Steam Release Location				Fraction of Steam Mass		Steam Mass Release Averaged χ/Qs (s/m³) G=AxE+D*F
	ADV/AFW Exhaust χ/Qs (s/m³) A	Group 1 PORV χ/Qs (s/m³) B	Group 2 PORV χ/Qs (s/m³) C	Average PORV χ/Qs (s/m³) D = 0.6B + 0.4C	Release From AFW Turbine E	Release From Intact SG PORV F	
0-2	4.66E-02	1.87E-02	1.89E-03	1.20E-02	0.106	0.894	1.56E-02
2 - 8	3.62E-02	1.31E-02	1.35E-03	8.40E-03	0.162	0.838	1.29E-02
8 - 24	1.55E-02	5.51E-03	5.33E-04	3.52E-03	0.191	0.809	5.81E-03
24 - 96	1.12E-02	3.52E-03	3.54E-04	2.25E-03	0.224	0.776	4.26E-03
96 - 720	9.95E-03	2.76E-03	2.75E-04	1.77E-03	0.224	0.776	3.60E-03

A from Table 3.1-12
B from Table 3.1-12
C from Table 3.1-12
D Conservative Assumption
E & F from Table 3.8-5; 96 to 720 hours data set to 24 - 96 hours data with no impact since release stops at 45.5 hours

Table 3.8-7
Average Unit 2 Atmospheric Dispersion Factor (χ/Q) for Intact Steam Release via PORV and TDAFW

Time Interval (hr)	Unit 2 Steam Release Location				Fraction of Steam Mass		Steam Mass Release Averaged χ/Qs (s/m³) G=AxE+D*F
	ADV/AFW Exhaust χ/Qs (s/m³) A	Group 1 PORV χ/Qs (s/m³) B	Group 2 PORV χ/Qs (s/m³) C	Average PORV χ/Qs (s/m³) D = 0.6B + 0.4C	Release From AFW Turbine E	Release From SG PORVs F	
0-2	9.89E-03	3.06E-02	2.47E-03	1.93E-02	0.106	0.894	1.83E-02
2 - 8	7.51E-03	2.46E-02	1.97E-03	1.55E-02	0.162	0.838	1.42E-02
8 - 24	3.29E-03	1.11E-02	8.76E-04	7.01E-03	0.191	0.809	6.30E-03
24 - 96	2.23E-03	7.76E-03	5.62E-04	4.88E-03	0.224	0.776	4.29E-03
96 - 720	1.73E-03	6.14E-03	4.32E-04	3.86E-03	0.224	0.776	3.38E-03

A from Table 3.1-12
B from Table 3.1-12
C from Table 3.1-12
D Conservative Assumption
E & F from Table 3.8-5, 96 to 720 hours data set to 24 - 96 hours data with no impact since release stops at 45.5 hours

3.8.5 Assumptions and Inputs

3.8.5.1 Assumptions

Regulatory Guide 1.183 (Reference 4) provides guidance on modeling assumptions that are acceptable to the NRC staff for the evaluation of the radiological consequences of a CREA. The applicability of these modeling assumptions to this PINGP CREA analysis is addressed in the regulatory conformance tables in Attachment 4.

3.8.5.2 Input Parameters

Input parameters for the CREA analysis are given in Table 3.8-8. A column for the input parameters used in the CLB analysis for a Control Rod Ejection is not provided as the analysis is not available.

Table 3.8-8
CREA Radiological Consequence Analysis Input Parameters

Input Parameter	AST	Justification
Rated Thermal Power	1,852 MW_t	Same as MSLB
Core isotopic activity at 1683MWt	Table 3.3-1	Same as LOCA
RCS (iodine) specific activity in the Technical Specifications	Table 3.2-8	Same as MSLB
Post-CREA failed (clad damaged) fuel	10%	Transient Analysis Acceptance Criteria
Percent of gap activity in damaged fuel released and available for release from containment leakage or primary-to-secondary leakage Iodine Noble Gases	 10% 10%	RG 1.183, Appendix H
Post-CREA Melted Fuel	0.25%	Transient Analysis Acceptance Criteria
Percent of Melted Fuel available for release via containment leakage Iodine Noble Gases	 25% 100%	RG 1.183
Percent of Melted Fuel available for release via primary-to-secondary leakage Iodine Noble Gases	 50% 100%	RG .1.183
Containment Free Air Volume	1,320,000 ft^3	Same as LOCA
Containment Spray System Parameters	Containment Spray is not credited for iodine removal from containment atmosphere	Same as LOCA

Input Parameter	AST	Justification
Shield Building Free Air Volume	374,000 ft^3	Same as LOCA
Iodine Chemical Form Aerosol (CsI) Elemental Organic	 95% 4.85% 0.15%	Same as LOCA
Primary Containment Leakage Rate (Figure 3.3-1)		
Maximum Primary Containment Leak Rate ($L_1 + L_2 + L_3$)	0.15 wt%/day ≤24 hrs 0.075 wt%/day >24 hrs	Same as LOCA
ABSVZ Total Leak Rate (L_2)	0.06 wt%/day ≤24 hrs 0.03 wt%/day >24 hrs	Same as LOCA
Bypass Total Leak Rate (L_3)	0.006 wt%/day ≤24 hrs 0.003 wt%/day >24 hrs	Same as LOCA
Shield Bldg Total Leak Rate (L_1)	0.084 wt%/day ≤24 hrs 0.042 wt%/day >24 hrs	Same as LOCA
Shield Building Drawdown Time	12 minutes	Same as LOCA
ABSVZ Drawdown Time	20 minutes	Same as LOCA
Initiation of Shield Building Recirculation	22 minutes	Same as LOCA
Shield Building Recirculation Flow Rate	3,600 cfm	Same as LOCA
Shield Building Mixing	50%	Same as LOCA
Shield Building Exhaust Flow Rates	2,000 cfm (Exhaust flow rate is 1,000 cfm and is doubled to simulate 50% mixing in Shield Building)	Same as LOCA
ABSVS Charcoal Filter Efficiencies	80% for Elemental Iodine 80% for Organic Iodide	Same as LOCA
ABSVS HEPA Filter Efficiencies	99% for Aerosol	Same as LOCA
SBVS Charcoal Filter Efficiencies	Not Credited	Same as LOCA
SBVS HEPA Filter Efficiencies	99% for Aerosol	Same as LOCA
Containment Leakage Release Point	SB Vent Stack	Same as LOCA
Secondary System Activity Transport Model		
Steam Generator Liquid Mass U1 Framatome ANP Model 56/19 U2 Westinghouse Model 51	 107,100 lbm @ Full Power 107,420 lbm @ Full Power	Same as MSLB
Nominal reactor coolant system (RCS) volume	5,290 ft^3	Same as MSLB
Primary to Secondary Leak Duration	45.5 hours	Same as MSLB
RCS Operational Leakage through any one SG	150 gpd – one intact SG 300 gpd – two intact SGs	Same as MSLB for intact SG
Density of primary-to-secondary leakage	62.4 lbm/ft^3	Same as MSLB
SG liquid iodine partition coefficient for SG liquid iodine release	100	RG 1.183

Input Parameter	AST	Justification
SG liquid iodine partition coefficient for primary-to-secondary leakage	100	RG 1.183
Iodine release from SG Elemental Iodine Organic Iodide	 97% 3%	RG 1.183
Steam mass released from intact SGs to the environment 0 – 2 hr 2 – 8 hr 8 – 24 hr 24 hr – 45.5 hr	 226,414 lbm 406,952 lbm 796,899 lbm 863,053 lbm	Same as MSLB
TDAFW Pump Steam Exhaust Release Rate 0 – 2 hr 2 – 8 hr 8 – 24 hr 24 hr – 45.5 hr	 12,000 lbm/hr 11,000 lbm/hr 9,500 lbm/hr 9,000 lbm/hr	Same as MSLB
Steam condition at full load	519.2°F, 806.8 psia – Unit 1 510.8°F, 728 psia – Unit 2	Same as MSLB
Control Room Parameters	Table 3.2-1	Table 3.2-1
Unit 2 CR χ/Qs for Containment Leakage via Unit 2 SB Vent Stack	Table 3.1-12	Conservative atmospheric dispersion factors
Unit 1 CR air intake χ/Qs for Unit 1 ADV / Aux Feedwater Turbine Exhaust release	Table3.1-12	Conservative atmospheric dispersion factors
Unit 2 CR air intake χ/Qs for Unit 2 ADV / Aux Feedwater Turbine Exhaust release	Table 3.1-12	Conservative atmospheric dispersion factors
Unit 1 CR air intake χ/Qs for Unit 1 Safety & Relief Valve Group 1 Release – Intact SG	Table 3.1-12	Conservative atmospheric dispersion factors
Unit 2 CR air intake χ/Qs for Unit 2 Safety & Relief Valve Group 1 Release – Intact SG	Table 3.1-12	Conservative atmospheric dispersion factors
Unit 1 CR air intake χ/Qs for Unit 1 Safety & Relief Valve Group 2 Release – Intact SG	Table 3.1-12	Conservative atmospheric dispersion factors
Unit 2 CR air intake χ/Qs for Unit 2 Safety & Relief Valve Group 2 Release – Intact SG	Table 3.1-12	Conservative atmospheric dispersion factors
PORV Mass Release Distribution	60% from Group 1 PORV 40% from Group 2 PORV	Conservative distribution based on assessment of EOPs

3.8.6 Summary and Conclusions

The post-CREA EAB, LPZ, and CR doses are summarized in the following tables.

Table 3.8-9
Control Rod Ejection Accident
TEDE Dose (Rem)

	Control Room	EAB	LPZ
Containment Leakage	4.11E-01	1.93E-01 (occurs @ 0.0 hr)	1.17E-01
P-T-S Iodine Release Intact SG	2.77E+00	2.88E-01 (occurs at t = 24 hrs)	1.67E-01
P-T-S Noble Gas Release Intact SG	2.82E-01	1.87E-01 (occurs at t = 0.0 hrs)	1.02E-01
Liquid Iodine Release Intact SG	9.78E-03	1.17E-03 (occurs at t = 0.0 hrs)	9.96E-04
External Cloud*	4.51E-02	0.00E+00	0.00E+00
CR Filter Shine*	2.33E-02	0.00E+00	0.00E+00
Total	**3.54E+00**	**6.69E-01**	**3.87E-01**
Allowable TEDE Limit	**5.00E+00**	**6.30E+00**	**6.30E+00**

* Post-LOCA External Cloud & CR Filter Shine Doses Used from Section 3.3

The results of the Control Rod Ejection Analysis indicate that the EAB, LPZ and CR doses are within their allowable limits. The calculated doses have adequate margins below allowable dose limits for future safe operation of the plant. The CREA analysis is provided in Attachment 11.

3.9 Locked Rotor Accident Radiological Assessment

The Locked Rotor Accident (LRA) analysis postulates the instantaneous seizure of a reactor coolant pump (RCP) rotor, where the reactor is tripped on the subsequent low flow signal. Following the trip, heat stored in fuel rods continues to pass into the reactor coolant, causing the coolant to expand. At the same time, heat transfer to the shell side of the SG is reduced, first because the reduced flow results in a decreased tube side film coefficient, and then because the reactor coolant in the tubes cools down while the shell side temperature increases (turbine steam flow is reduced to zero upon plant trip). The rapid expansion of the coolant in the reactor core, combined with the reduced heat transfer in the SGs, causes an insurgence of coolant into the pressurizer and a pressure increase throughout the RCS. The insurgence of coolant into the pressurizer compresses the steam volume, which in turn actuates the automatic spray system, opens the pressurizer PORVs, and also opens the pressurizer safety valves.

3.9.1 Methodology Overview

This evaluation of the radiological consequences of a postulated seizure of a RCP rotor, i.e., a LRA, assumes that the reactor has been operating with a small percent of defective fuel (i.e., 1%) and leaking SG tubes (150 gallons per day per each SG). The reactor is assumed to have been operating in this condition for sufficient time to establish equilibrium concentrations of radionuclides in the reactor coolant and secondary coolant.

It is conservatively assumed that, as a result of the postulated LRA, 20% of the fuel rods in the core undergo sufficient clad damage to result in the release of their gap activity. Twenty percent clad damage is the acceptance criteria for the Locked RCP Rotor transient analysis. The results from the Locked RCP Rotor transient analysis are bounded by the associated acceptance criteria. Therefore, using the transient analysis acceptance criteria as the inputs to the radiological dose consequence analysis is conservative.

As a result of this accident, radionuclides carried by the primary coolant to the SGs, via leaking SG tubes, are released to the environment via SG PORVs.

The LRA dose assessment is modeled to calculate the doses due to the activity that was instantaneously released into the RCS from the postulated damaged fuel fraction, and the activity resulting from a pre-accident 30 μCi/gm DE I-131 spike. Leakage and steaming rates through the SG PORVs are used to model the transport of activity from the RCS to the environment. Prior to the accident, a secondary coolant specific activity equal to the Technical Specification limit of 0.1 μCi/gm DE I-131 equilibrium activity is assumed.

3.9.2 Analytical Model

The model for the activity available for release to the atmosphere from the SG PORVS and TDAFW Pump steam exhaust assumes that the release consists of the activity in the secondary coolant prior to the accident plus that activity leaking from the primary coolant through the SG tubes following the accident. The primary coolant activity after the accident is assumed to be composed of the equilibrium activity prior to the accident, plus 100 percent of the noble gases and iodines released by fuel failed during the accident, plus 100 percent of the noble gases and iodides released by fuel failed during the accident, plus the activity released from the failed fuel. The leakage of primary coolant to the secondary side of the SGs is assumed to continue at its initial rate, assumed to be the same rate as the leakage prior to the accident, until the pressures in the primary and secondary systems are equalized. This occurs when the shutdown cooling system (RHR System) is placed into service. No mass transfer from the primary system to the secondary system is assumed thereafter.

Since a coincident loss of offsite power is assumed, activity is assumed to be released to the atmosphere through the SG PORVs and TDAFW Pump steam exhaust and not the main condenser.

The release pathways for the LRA are shown in Figure 3.9-1 below.

Figure 3.9-1
LRA Analysis Model

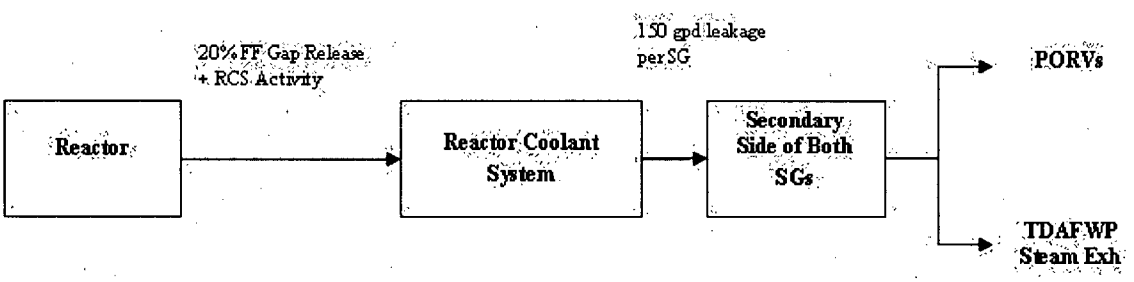

3.9.3 Radiological Source Term

For conservatism, the LRA core source terms are those associated with a DBA power level of 1852 MWth, which is greater than the CLB of 1650 MWt.

The instantaneous seizure of the RCP rotor associated with the LRA results in a small percentage of fuel damage. The dose analysis for this event conservatively assumes 20% fuel damage. Therefore, the source term available for release is associated with this fraction of damaged fuel and the fraction of core activity existing in the gap, plus the iodine in the RCS due to a design basis pre-accident iodine and noble gas activity associated with assumed 1% fuel defects.

Release fractions and transport fractions are consistent with Regulatory Guide 1.183, Appendix G and Table 3. To conform to this regulatory guidance, 5% of

the core inventory of iodine and noble gas is assumed to be in the fuel-clad gap, excluding 1-131 and Kr-85, where 8% and 10% are assumed, respectively.

The source term model also consists of the 0.1 µCi/gm DE I-131 equilibrium secondary coolant activity concentration, consistent with the TS requirements.

3.9.3.1 Reactor Coolant System Source Term

3.9.3.1.1 RCS Iodine Concentrations

The initial RCS iodine concentrations are assumed to be at the values corresponding to 1% failed fuel provided in Table 3.2-8.

3.9.3.1.2 RCS Noble Gas Concentrations

The initial RCS noble gas concentrations are assumed to be at the values corresponding to 1% failed fuel provided in Table 3.2-8.

3.9.3.1.3 RCS Cesium and Rubidium Concentrations

As described in Section 3.2.4.4.4, Cesium and Rubidium are not included in the RCS source term for the LRA radiological consequence analysis.

3.9.3.2 Secondary System Source Terms

3.9.3.2.1 Secondary System Iodine Concentrations

The secondary systems iodine concentrations corresponding to the Technical Specification limit of 0.10 µCi/gm are given in Table 3.2-11.

3.9.3.3 Fuel Pin Gap Source

The accident release inventory is derived from the core isotopic inventory. This inventory is corrected to the total gap inventory in order to calculate the release from a failure of 20% of the fuel rods. The gap fractions identified in Regulatory Guide 1.183, Table 3, are used in the analysis. As discussed in Section 3.2.4.2.1, these gap fractions are conservative for the PINGP. The gap release source is presented in Table 3.9-1.

Table 3.9-1
20% Failed Fuel Gap Release Source

Nuclide	Core Inventory at 1683 MWt (Ci)	20% Clad Failure Release at 1683 MWt (Ci) (*)
Kr-83M	0.00E+00	0.00E+00
Kr-85	7.15E+05	1.43E+04
Kr-85m	1.08E+07	1.08E+05
Kr-87	2.12E+07	2.12E+05
Kr-88	2.82E+07	2.82E+05
Xe-131M	5.06E+05	5.06E+03
Xe-133	9.15E+07	9.15E+05
Xe-133M	2.86E+06	2.86E+04
Xe-135	2.07E+07	2.07E+05
Xe-135M	1.95E+07	1.95E+05
Xe-138	7.72E+07	7.72E+05
I-131	4.50E+07	7.20E+05
I-132	6.51E+07	6.51E+05
I-133	9.13E+07	9.13E+05
I-134	1.02E+08	1.02E+06
I-135	8.72E+07	8.72E+05

(*) 20% Clad Failure Release = Core Inventory * Gap Activities from Regulatory Guide 1.183 Table 3 * 20% Clad Failure

3.9.3.4 Total Source Available for Release

The total source available for release is presented in Table 3.9-2.

Table 3.9-2
Total Activity Initially Present in the RCS

Nuclide	20% Clad Failure Release (Ci)	RCS Activity (Ci)	Total Activity Released to RCS (Ci)	Ci/MWt at 1683 MWt
Kr-83M	0	5.868E+01	5.868E+01	3.487E-02
Kr-85	1.43E+04	1.632E+03	1.593E+04	9.466E+00
Kr-85m	1.08E+05	2.380E+02	1.082E+05	6.431E+01
Kr-87	2.12E+05	1.542E+02	2.122E+05	1.261E+02
Kr-88	2.82E+05	4.326E+02	2.824E+05	1.678E+02
Xe-131M	5.06E+03	3.069E+02	5.367E+03	3.189E+00
Xe-133	9.15E+05	3.892E+04	9.539E+05	5.668E+02
Xe-133M	2.86E+04	5.464E+02	2.915E+04	1.732E+01
Xe-135	2.07E+05	1.234E+03	2.082E+05	1.237E+02
Xe-135M	1.95E+05	7.515E+01	1.951E+05	1.159E+02
Xe-138	7.72E+05	9.117E+01	7.721E+05	4.588E+02
I-131	7.20E+05	3.817E+02	7.204E+05	4.280E+02
I-132	6.51E+05	4.192E+02	6.514E+05	3.871E+02
I-133	9.13E+05	5.808E+02	9.136E+05	5.428E+02
I-134	1.02E+06	8.713E+01	1.020E+06	6.061E+02
I-135	8.720E+05	3.293E+02	8.723E+05	5.183E+02

The Ci/MWt values are used as input in the RADTRAD nuclide inventory file. A separate input to the RADTRAD code is the assumed power level. In this case, to bound expected EPU conditions, a power level of 1852 MWt is used as input.

3.9.4 Radiological Releases

Following a LRA, it is assumed that it takes 45.5 hours to cool down to the point where shutdown cooling (RHR System) is placed into operation. At this point steam releases from the SGs are terminated. The cooldown is performed using the SGs. The mass of the steam released and the release location during the cooldown are important considerations due to the 150 gpd leakage assumed for each SG (maximum allowed by Technical Specification 3.4.14) (Reference 27). Assuming a loss of off-site power the unit would be cooled down using procedures for natural circulation. During a plant cooldown the preferred means to release steam for the cooldown is by dumping steam to the condenser. If this path is not available, then the SG PORV is used. For consideration of dose to the Control Room operator, the SG PORV release path is limiting.

An additional steam release path from one SG is through the Turbine Driven Auxiliary Feedwater (TDAFW) Pump steam exhaust. Assuming a single failure that results in loss of the motor driven AFW Pump, the TDAFW Pump would be used for the cooldown.

The steam release paths for the LRA are the same as the steam release paths described in Section 3.8.4.2 from the Intact SGs during a CREA. The total steam mass release, the steam mass released by the TDAFW Pump steam exhaust, and steam mass released by the SGs are shown in Table 3.8-5Similar to the CREA, for the purposes of the analysis, the TDAFW steam mass release is included in the steam mass release from one SG's PORVs, which is modeled with average χ/Qs that are determined by steam mass release weighting of the PORVs and TDAFW pump exhaust rates shown in Table 3.8-5. The average χ/Q values for Unit 1 and Unit 2 are shown in Tables 3.8-6 and 3.8-7, respectively. Per plant operating procedures, the PORVs on the SGs would be used to minimize the pressure difference between the SGs to prevent uneven RCS temperature distributions. To be conservative the analysis assumes that the PORV closer to the Control Room vent intake is used to dump 60% of the total steam mass released from this SG and the remaining 40% is dumped from the other SG PORV.

3.9.5 Assumptions and Inputs

3.9.5.1 Assumptions

Regulatory Guide 1.183 (Reference 4) provides guidance on modeling assumptions that are acceptable to the NRC staff for the evaluation of the radiological consequences of a LRA. The applicability of these modeling

assumptions to this PINGP LRA analysis is addressed in the regulatory conformance tables in Attachment 4.

3.9.5.2 Input Parameters

Input parameters for the LRA analysis are given in Table 3.9-3. Input parameters for the Locked Rotor CLB analysis are not presented in Table 3.9-3 as the analysis is not available.

Table 3.9-3
LRA Radiological Consequence Analysis Input Parameters

Input Parameter	AST	Justification
Rated Thermal Power	1,852 MW_t	Same as MSLB
RCS iodine specific activity	0.50 μCi/gm DE I-131	Same as MSLB
Reactor Coolant System (non-iodine) specific activity	580 μCi/g DE of Xe-133	Same as MSLB
Secondary coolant (iodine) specific activity	0.1 μCi/gm DE Iodine-131	Same as MSLB
Core activity inventory at 1683 MWt	Table 3.9-1	Table 3.9-1 is based on fuel failure percentage
Total Source Available for Release	Table 3.9-2	Includes Table 3.9-1 plus RCS activity
Post-LRA failed fuel	20%	LRA Transient analysis acceptance criteria
Fission product inventory in Fuel Rod Gap: I-131 Other Iodines (I & Br) Kr-85 Other Noble Gases (Kr & Xe)	 0.08 0.05 0.10 0.05	RG 1.183
Radionuclide Composition **Group**	**Elements**	
Noble Gases	Xe, Kr	RG 1.183
Iodines	I, Br	RG 1.183
Alkali Metals	Cs, Rb	RG 1.183
Tellurium Group	Te, Sb, Se, Ba, Sr	RG 1.183
Noble Metals	Ru, Rh, Pd, Mo, Tc, Co	RG 1.183
Lanthanides	La, Zr, Nd, Eu, Nb, Pm, Pr, Sm, Y, Cm, Am	RG 1.183
Cerium	Ce, Pu, Np	RG 1.183
RCS operational leakage through any one SG	150 gpd – one intact SG 300 gpd – two intact SGs	RG 1.183
Density of primary-to-secondary leakage	62.4 lbm/ft^3	Same as MSLB for Intact SG
Primary-to-Secondary leak duration	45.5 hours	Cooldown time conservatively determined based on plant procedures.

Input Parameter	AST	Justification
Steam mass released from intact SGs to the environment 0 – 2 hr 2 – 8 hr 8 – 24 hr 24 – 45.5 hr	 226,414 lbm 406,952 lbm 796,899 lbm 863,053 lbm	Same as MSLB
TDAFW Pump Steam Exhaust Release Rate 0 – 2 hr 2 – 8 hr 8 – 24 hr 24 hr – 45.5 hr	 12,000 lbm/hr 11,000 lbm/hr 9,500 lbm/hr 9,000 lbm/hr	Same as MSLB
Nominal Reactor Coolant System volume	5,290 ft^3	Same as MSLB
Steam generator dilution mass: U1 Framatome ANP Model 56/19 U2 Westinghouse Model 51	 107,100 lb @ Full Power 107,420 lb @ Full Power	Same as MSLB
SG liquid iodine partition coefficient for SG liquid iodine release	100	RG 1.183
SG liquid iodine partition coefficient for P-T-S leakage	100	RG 1.183
Chemical Form of Iodine In SG Releases Elemental Organic	 97% 3%	RG 1.183
Steam condition at full load	519.2^{0}F and 806.8 psia – Unit 1 510.8^{0}F and 750 psia – Unit 2	Same as MSLB
Steam generator moisture carryover: Unit 1 Unit 2	 $\leq$ 0.10 % $\leq$ 0.25 %	Same as MSLB
Control Room Parameters	Table 3.2-1	Table 3.2-1
Unit 1 CR air intake χ/Qs for Unit 1 ADV / Aux Feedwater Turbine Exhaust release	Table 3.1-12	Conservative atmospheric dispersion factors
Unit 2 CR air intake χ/Qs for Unit 2 ADV / Aux Feedwater Turbine Exhaust release	Table 3.1-12	Conservative atmospheric dispersion factors
Unit 1 CR air intake χ/Qs for Unit 1 Safety & Relief Valve Group 1 Release – Intact SG	Table 3.1-12	Conservative atmospheric dispersion factors
Unit 2 CR air intake χ/Qs for Unit 2 Safety & Relief Valve Group 1 Release – Intact SG	Table 3.1-12	Conservative atmospheric dispersion factors
Unit 1 CR air intake χ/Qs for Unit 1 Safety & Relief Valve Group 2 Release – Intact SG	Table 3.1-12	Conservative atmospheric dispersion factors

Input Parameter	AST	Justification
Unit 2 CR air intake χ/Qs for Unit 2 Safety & Relief Valve Group 2 Release – Intact SG	Table 3.1-12	Conservative atmospheric dispersion factors
PORV Mass Release Distribution	60% from the Group 1 PORVs 40% from the Group 2 PORVs	Conservative distribution based on assessment of EOPs

3.9.6 Summary and Conclusions

The post-LRA EAB, LPZ, and CR doses are summarized in the Table 3.9-4.

Table 3.9-4
Locked Rotor Accident
TEDE Dose (Rem)

	Control Room	EAB	LPZ
P-T-S Iodine Release SGs	3.68E+00	3.90E-01 (occurs at t = 24 hrs)	2.14E-01
P-T-S Noble Gas Release SGs	1.22E-01	9.57E-02 (occurs at t = 0.0 hrs)	5.59E-02
Liquid Iodine Release SGs	9.78E-03	1.17E-03 (occurs at t = 0.0 hrs)	9.66E-04
External Cloud*	3.70E-02	0.00E+00	0.00E+00
CR Filter Shine*	4.71E-02	0.00E+00	0.00E+00
Total	**3.90E+00**	**4.87E-01**	**2.71E-01**
Allowable TEDE Limit	**5.00E+00**	**2.50E+00**	**2.50E+00**

* Post-LOCA External Cloud & CR Filter Shine Doses Used from Section 3.3

The results of the Locked Rotor Accident Analysis indicate that the EAB, LPZ and CR doses are within their allowable limits. The calculated doses have adequate margins below allowable dose limits for future safe operation of the plant. The LRA analysis is provided in Attachment 12.

3.10 NUREG-0737 Evaluations

As part of the DBA LOCA analysis, radiation levels from contained sources (containment structure and Control Room and Technical Support Center (TSC) filters) were evaluated. These evaluations were used to determine if an impact on the following areas covered by NUREG-0737 (Reference 28) would occur as a result of an increase in the associated radiation levels:

- CLB radiological dose analyses for post-accident vital area access (NUREG-0737, Item II.B.2), and

- CLB control room post-accident radiological dose analyses for emergency support facility upgrades and control room habitability (NUREG-0737, Items III.A.1.2 and III.D.3.4).

The following evaluations were included as part of the AST analyses.

- Post Accident Vital Area Access personnel missions resulting in mission doses have been previously identified. Operator missions were determined based on review of emergency operating procedures. The implementation of the AST methodology does not result in any new operator missions. Times to perform the operator missions were based on time and motion studies. Dose consequences received during these missions were evaluated and the results are less than the acceptance criteria. The post-LOCA vial access area mission doses and total transit and stay times are summarized in Table 3.10-1:

Table 3.10-1
Vital Area Access Mission Dose Results

Vital Function To Be Performed	TEDE Dose / Mission Time		Allowable Dose Limit (rem TEDE)
	Unit 1 (rem TEDE) hr	Unit 2 (rem TEDE) hr	
Alignment of Sump Recirculation	2.305	1.939	5.0
	0.294	0.292	
Removal of CC HX Travel Stops	1.036	0.184	5.0
	0.196	0.190	
Isolation of CC to Containment	2.373	2.150	5.0
	0.114	0.136	
Replacement of CR Chiller Air Bottles	1.71	1.71	5.0
	0.35	0.35	

- Control Room Radiation Protection -The doses to Control Room operators were specifically calculated using AST for the Design Basis Accidents described in this submittal. Results are presented with each respective accident description in Sections 3.3 through 3.9. (NUREG-0737, Item III.D.3.4).

- Technical Support Center Radiation Protection -The doses to TSC personnel were specifically calculated using AST for the Design Basis Accidents described in this submittal. Results are presented in Section 3.3 for the limiting accident (LOCA). (NUREG0737, Item III.A. 1.2).

- Operations Support Center (OSC) – The OSC TEDE dose and dose rate are expected to exceed the allowable TEDE dose and dose rate limits due to the lack of a charcoal filtration system in the OSC air intake. Per established procedures, the OSC is continuously monitored for direct and airborne radiation and will be evacuated to the lower level of the TSC (i.e., habitable area) if necessary.

- Radioactive Sources Outside the Primary Containment -The DBA LOCA Control Room/TSC dose analysis, as well as that for offsite doses, considers the effects of ESF leakage outside the primary containment and (for the Control Room and TSC dose analyses only) the shine contribution from the containment and other source term bearing systems and/or components (NUREG -0737, Item III.D. 1.1).

3.11 Conclusion

The proposed changes provide a source term for PINGP that will result in a more accurate assessment of the DBA radiological doses. The results from all of the dose analyses show that the predicted dose consequence results are within the allowable regulatory limits. The revised radiological dose to the control room operator allows for a revised unfiltered air in-leakage assumption that provides a conservative margin over that determined by air in-leakage testing.

3.12 TS Discussion

Current TS Requirements

TS 1.1, "Definitions"

This TS provides a definition for Dose Equivalent I-131 (DEI), which currently references Table III of TID-14844, AEC, 1962, "Calculation of Distance Factors for Power and Test Reactor Sites." The current definition for DEI is based on thyroid dose conversion factors and reflects a licensing model in which the radiological consequences of iodine releases for accidents are reported as thyroid and whole body doses.

This TS provides a definition for E-Bar, "Average Disintegration Energy," which is the average of the sum of the average beta and gamma energies per disintegration for isotopes, other than iodines, with half lives > 15 minutes, making up at least 95% of the total noniodine activity in the coolant.

TS 3.3.7, "Spent Fuel Pool Special Ventilation System Actuation Instrumentation"

This TS provides requirements for instrumentation associated with the Spent Fuel Pool Special Ventilation System (SFPSVS). The SFPSVS ensures that radioactive materials in the fuel pool enclosure atmosphere following a fuel handling accident are filtered and adsorbed prior to exhausting to the environment. This action serves to reduce the radioactive content in the fuel pool enclosure exhaust following a fuel handling accident so that offsite doses remain within the limits specified in 10 CFR 100. The LCO requirements ensure that instrumentation necessary to initiate the SFPSVS is OPERABLE.

TS 3.4.17, "RCS Specific Activity"

This TS provides requirements for the Reactor Coolant System (RCS) specific activity. The reactor coolant specific activity level is used in design basis accident analyses to determine the radiological consequences of accidents that involve the release of reactor coolant activity. The RCS specific activity LCO limits the allowable concentration level of radionuclides in the reactor coolant. The LCO limits are established to minimize the offsite radioactivity dose consequences in the event of a steam generator tube rupture (SGTR) accident. The DOSE EQUIVALENT I-131 limit has been established to ensure that the control room dose acceptance criteria are met following a main steam line break (MSLB) when applying the alternative voltage repair criteria.

The LCO contains specific activity limits for both DOSE EQUIVALENT I-131 and gross specific activity. The allowable levels are intended to limit the 2 hour dose at the site boundary to a small fraction of the 10 CFR 100 dose guideline limits. Except for the DOSE EQUIVALENT I-131 limit, the limits in the LCO are standardized, based on parametric evaluations of offsite radioactivity dose consequences for typical site locations. The LCO limit for DOSE EQUIVALENT I-131 was derived from the control room dose consequence analysis following a MSLB assuming alternate repair criteria.

The specific iodine activity is limited to 0.5 μCi/gm DOSE EQUIVALENT I-131, and the gross specific activity in the reactor coolant is limited to the number of μCi/gm equal to 100 divided by E-Bar. The limit on DOSE EQUIVALENT I-131 ensures that the thyroid dose to personnel in the control room during the Design Basis Accident (DBA) will be within the allowed limit. The limit on gross specific activity ensures the 2 hour whole body dose to an individual at the site boundary

during the DBA will be a small fraction of the allowed whole body dose. The SGTR accident analysis shows that the 2 hour site boundary dose levels are within acceptable limits. The MSLB accident analysis shows that the control room dose levels are within acceptable limits assuming the limiting primary to secondary leakage. Violation of the LCO may result in reactor coolant radioactivity levels that could, in the event of an SGTR, lead to site boundary doses that exceed the 10 CFR 100 dose guideline limits.

The applicability of this TS is in MODES 1 and 2, and in MODE 3 with RCS average temperature ≥ 500°F.

Condition A of TS 3.4.17 requires taking the Required Actions when RCS DEI limit exceeds 0.5 μCi/gm. Actions A.1 and A.2 require that with the DOSE EQUIVALENT I-131 greater than the LCO limit, samples at intervals of 4 hours must be taken to demonstrate that the limits of Figure 3.4.17-1 are not exceeded. The Completion Time of 4 hours is required to obtain and analyze a sample. Sampling is done to continue to provide a trend.

The DOSE EQUIVALENT I-131 must be restored to within limits within 48 hours. The Completion Time of 48 hours is required, if the limit violation resulted from normal iodine spiking.

Condition B of TS 3.4.17 requires that with the gross specific activity in excess of the allowed limit, the reactor must be placed in a MODE in which the requirement does not apply. The change within 6 hours to MODE 3 and RCS average temperature < 500°F lowers the saturation pressure of the reactor coolant below the setpoints of the main steam safety valves and prevents venting the SG to the environment in a SGTR event.

Condition C of TS 3.4.17 requires that if a Required Action and the associated Completion Time of Condition A is not met or if the DOSE EQUIVALENT I-131 is in the unacceptable region of Figure 3.4.17-1, the reactor must be brought to MODE 3 with RCS average temperature < 500°F within 6 hours.

SR 3.4.17.1 requires performing a gamma isotopic analysis as a measure of the gross specific activity of the reactor coolant at least once every 7 days. While basically a quantitative measure of radionuclides with half lives longer than 15 minutes, excluding iodines, this measurement is the sum of the degassed gamma activities and the gaseous gamma activities in the sample taken. This Surveillance provides an indication of any increase in gross specific activity.

SR 3.4.17.2 is performed in MODE 1 only to ensure iodine remains within limit during normal operation and following fast power changes when fuel failure is more apt to occur. The 14 day Frequency is adequate to trend changes in the iodine activity level, considering gross activity is monitored every 7 days. The Frequency, between 2 and 6 hours after a power change ≥ 15% RTP within a

1 hour period, is established because the iodine levels peak during this time following fuel failure; samples at other times would provide inaccurate results.

SR 3.4.17.3 requires a radiochemical analysis be performed for E-Bar determination every 184 days (6 months) with the plant operating in MODE 1 equilibrium conditions. The E-Bar determination directly relates to the LCO and is required to verify plant operation within the specified gross activity LCO limit. The analysis for E-Bar is a measurement of the average energies per disintegration for isotopes with half lives longer than 15 minutes, excluding iodines. The Frequency of 184 days recognizes E-Bar does not change rapidly.

TS 3.7.12, "Auxiliary Building Special Ventilation System"

This TS provides requirements for the ABSVS. The ABSVS is a standby ventilation system, common to the two units, that is designed to collect and filter air from the Auxiliary Building Special Ventilation (ABSV) boundary following a LOCA. The ABSV boundary contains those areas within the auxiliary building which have the potential for collecting significant containment leakage that could bypass the shield building and leakage from systems which could re-circulate primary coolant during LOCA mitigation.

The LCO for this TS requires that two independent and redundant trains of the ABSVS are required to be OPERABLE to ensure that at least one is available, assuming that a single failure disables the other train.

TS SR 3.7.12.3 verifies proper functioning of the ABSVS by verifying the integrity of the ABSV boundary and the ability of the ABSVS to maintain a negative pressure with respect to potentially uncontaminated adjacent areas.

During the post accident mode of operation, the ABSVS is designed to maintain a slight negative pressure within the ABSV boundary with respect to the containment and shield building. SR 3.7.12.3 verifies that a measurable negative pressure is drawn within the ABSV boundary within 6 minutes after initiation.

TS 3.7.13, "Spent Fuel Pool Special Ventilation System"

This TS provides requirements for the SFPSVS. The SFPSVS ensures that radioactive materials in the fuel pool enclosure atmosphere following a fuel handling accident are filtered and adsorbed prior to exhausting to the environment. Two independent and redundant trains of the SFPSVS are required to be OPERABLE to ensure that at least one train is available, assuming a single failure disables the other train. This OPERABILITY requirement ensures that the atmospheric release from a fuel handling accident in the spent fuel pool enclosure would not result in doses exceeding the 10 CFR 100 limits.

TS 3.9.4, "Containment Penetrations"

This TS provides requirements for the Containment Penetrations. The containment serves to contain fission product radioactivity that may be released from the reactor core following an accident, such that offsite radiation exposures are maintained well within the regulatory requirements. Additionally, the containment provides radiation shielding from the fission products that may be present in the containment atmosphere following accident conditions.

During CORE ALTERATIONS or movement of irradiated fuel assemblies within containment, the most severe radiological consequences result from a fuel handling accident involving recently irradiated fuel. The fuel handling accident is a postulated event that involves damage to irradiated fuel. Fuel handling accidents include dropping a single irradiated fuel assembly and handling tool or a heavy object onto other irradiated fuel assemblies.

The LCO for TS 3.9.4 limits the consequences of a fuel handling accident involving irradiated fuel in containment by limiting the potential escape paths for fission product radioactivity released within containment. The LCO requires penetrations providing direct access from the containment atmosphere to the outside atmosphere to be closed, including containment purge and exhaust penetrations.

TS 5.5.9, "Ventilation Filter Testing Program"

This TS provides the requirements for the Ventilation Filter Testing Program. TS 5.5.9 provides the program to implement required testing of the CRSVS, ABSVS, SBVS and SFPIPVS. The program requires that the following is demonstrated for the ABSVS, SBVS, CRSVS and SFPSIPVS systems:

5.5.9b – A penetration and system bypass test of the inplace charcoal adsorber which shows <0.05%.

5.5.9c – A laboratory test of a sample of the charcoal adsorber which shows the methyl iodine penetration less than 15% for ABSVS, 15% for SBVS, 7.5% for the SFPSIPVS, and 2.5% for the CRSVS when tested in accordance with ASTM-D3803-1989, at 30°C and 95% RH.

5.5.9d – The pressure drop across the combined HEPA filters and charcoal adsorbers is less than 6 inches of water at the system flowrate +/- 10%.

5.5.9e – A laboratory test of a sample of the charcoal adsorber which has filter test face velocities greater than or equal to 54 fpm for the CRSVS, 72 fpm for the ABSVS 47 fpm for the SBVS and 47 fpm for the SFPSIPVS.

TS 5.5.14, "Containment Leakage Rate Testing Program"

This TS provides the requirements for the Containment Leakage Rate Testing Program. 5.5.14c provides that maximum allowable primary containment leakage rate, L_a, at P_a, shall be 0.25% of the primary containment air weight per day. For pipes connected to systems that are in the ABSVZ, the total leakage shall be less than 0.1%. For pipes connected to systems that are exterior to both the SB and the AB special ventilation zone, the total leakage past the isolation valves shall be less than 0.01%.

Proposed TS 5.5.16, "Control Room Habitability Program"

This TS was proposed by letter dated June 24, 2009 (ADAMS Accession #ML091760988). This letter proposed the adoption of TSTF-448 for PINGP. This TS provides the requirements for the control room habitability program. This TS includes references to both AST and TID dose consequence because at the time of submittal, PINGP was both a TID and AST plant (FHA).

Proposed TS Changes

TS 1.1, "Definitions"

PINGP proposes to implement the approved Industry improved Standard Technical Specification traveler, TSTF-490. This TS will be revised to delete reference to TID-14844 and to reference Table 2.1 of Federal Guidance Report 11, "Limiting Values of Radionuclide Intake and Air Concentration and Dose Conversion Factors for Inhalation, Submersion and Ingestion."

This TS will be revised to replace the term E-Bar, "Average Disintegration Energy," with the term Dose Equivalent Xe-133. This change is being made to implement a LCO that is more attuned to the whole body radiological consequences analyses which are sensitive to the noble gas activity in the primary coolant but not to other, non-gaseous activity currently captured in the E-Bar definition.

TS 3.3.7, "Spent Fuel Pool Special Ventilation System Actuation Instrumentation"

This TS and associated Bases will be removed from Technical Specifications.

TS 3.4.17, "RCS Specific Activity"

PINGP proposes to implement the approved Industry improved Standard Technical Specification traveler, TSTF-490. This TS will be revised to replace the current TS limits on reactor coolant gross specific activity with limits on reactor coolant noble gas activity. The noble gas activity would be based on

Dose Equivalent Xe-133 and would take into account the noble gas activity in the reactor coolant. Figure 3.4.17-1, which reflects reactor coolant iodine concentration as a function of reactor power, is deleted and replaced with a single value that is applicable to any power level.

The applicability of LCO 3.4.17 will be revised to indicate the LCO is applicable in MODES 1, 2, 3 and 4.

Condition A of TS 3.4.17 is modified to delete the reference to Figure 3.4.17-1, and define an upper limit that is applicable at all power levels. Condition B is modified to provide a Condition and Required Action for Dose Equivalent Xe-133 instead of gross specific activity. The Completion Time is changed from 6 hours to 48 hours. A Note allowing the applicability of LCO 3.0.4c is added, consistent with the Note to Required Action A.1. Condition C is modified based on the changes to Conditions A and B and to reflect the change in the LCO Applicability.

SR 3.4.17.1 is revised to verify the limit for Dose Equivalent Xe-133. A Note is added consistent with SR 3.4.17.2 to allow entry into MODES 4, 3 and 2 prior to performance of the SR. SR 3.4.17.3 is deleted.

These changes are consistent with TSTF-490.

TS 3.7.12, "Auxiliary Building Special Ventilation System"

TS SR 3.7.12.3 verifies that a measurable negative pressure is drawn within the ABSV boundary within 6 minutes after initiation. TS SR 3.7.12.3 will be revised to increase the duration time from 6 minutes to 20 minutes.

TS 3.7.13, "Spent Fuel Pool Special Ventilation System"

This TS and associated Bases will be removed from Technical Specifications.

TS 3.9.4, "Containment Penetrations"

This TS and associated Bases are being replaced with a TS and Bases on Decay Time, which requires that recently irradiated fuel (<50 hours) cannot be handled.

TS 5.5.9, "Ventilation Filter Testing Program"

This TS will be revised by deleting the Spent Fuel Pool Special and Inservice Purge Ventilation System (SFPSIPVS) from the Ventilation Filter Testing program.

TS 5.5.9b and TS 5.5.9d

TS 5.5.9b and TS 5.5.9d will be revised to reflect that the Shield Building Ventilation System (SBVS) is no longer applicable to charcoal adsorber testing.

TS 5.5.9c

TS 5.5.9c will be revised to delete the methyl iodide penetration values for the SBVS and SFPSIPVS and to revise the methyl iodide penetration value from 15% to 10% for the ABSVS.

TS 5.5.9e

TS 5.5.9e will be revised to delete the test face velocity values for the SBVS and SFPSIPVS.

TS 5.5.14, "Containment Leakage Rate Testing Program"

TS 5.5.14c will be revised to reflect revised values for the primary containment leakage rate. The maximum allowable primary containment leakage rate, L_a, at P_a, will be revised from 0.25% to 0.15% of the primary containment air weight per day. For pipes connected to systems that are in the ABSVZ, the total leakage will be revised from 0.1% to 0.06%. For pipes connected to systems that are exterior to both the SB and the AB special ventilation zone, the total leakage past the isolation valves will be revised from 0.01% to 0.006%.

Proposed TS 5.5.16, "Control Room Habitability Program"

This TS will be revised to deleted references to TID dose consequence of 5 rem whole body.

<u>Technical Bases for TS Changes</u>

TS 1.1, "Definitions"

This LAR proposes to revise the definition for Dose Equivalent I-131 (DEI). This TS provides a definition for DEI, which currently references Table III of TID-14844, AEC, 1962, "Calculation of Distance Factors for Power and Test Reactor Sites." This definition will be revised to reference Table 2.1 of Federal Guidance Report 11, "Limiting Values of Radionuclide Intake and Air Concentration and Dose Conversion Factors for Inhalation, Submersion and Ingestion." This change is acceptable because with the use of the Alternative Source Term methodology, thyroid and whole body doses are not reported. Under AST, the doses are reported as Total Effective Dose Equivalent (TEDE). The TEDE dose is a summation of the Committed Effective Dose Equivalent (CEDE) and the whole body dose. Therefore, the DEI definition should be based on the CEDE dose conversion factors instead of thyroid dose conversion factors.

This LAR proposes to replace the term E-Bar, "Average Disintegration Energy," with the term Dose Equivalent Xe-133. This change is being made to implement a LCO that is more attuned to the whole body radiological consequences analyses which are sensitive to the noble gas activity in the primary coolant but not to other, non-gaseous activity currently captured in the E-Bar definition.

These proposed changes are consistent with TSTF-490.

TS 3.3.7, "Spent Fuel Pool Special Ventilation System Actuation Instrumentation"

This TS and associated Bases will be removed from Technical Specifications. This TS provides requirements for instrumentation associated with the Spent Fuel Pool Special Ventilation System (SFPSVS). The current PINGP analysis for a FHA in the SFP area does not model operation of the SFPSVS without the filters in service. The new analysis for AST is performed with the most limiting release point X/Q values to the Control Room for FHA inside of containment and in the SFP area. In both cases, the FHA analysis is performed without taking credit for filtration or isolation in the respective area. The SFPSVS is not required in order to meet dose consequence limits. Therefore, the actuation instrumentation for the SFPSVS is not required to meet dose consequence limits.

TS 3.4.17, "RCS Specific Activity"

PINGP proposes to implement the approved Industry improved Standard Technical Specification traveler, TSTF-490. The current TS limits on reactor coolant gross specific activity are being replaced with limits on reactor coolant noble gas activity. The noble gas activity would be based on Dose Equivalent Xe-133 and would take into account the noble gas activity in the reactor coolant. Figure 3.4.17-1, which reflects reactor coolant iodine concentration as a function of reactor power, is deleted and replaced with a single value that is applicable to any power level.

When E-Bar is determined using a design basis approach in which it is assumed that 1.0% of the power is being generated by fuel rods having cladding defects and it is also assumed that there is no removal of fission gases from the letdown flow, the value of E-Bar is dominated by Xe-133. The other nuclides have relatively small contributions. However, during normal plant operation there are typically only a small amount of fuel defects and the radioactive nuclide inventory can become dominated by tritium and corrosion and/or activation products, resulting in the determination of a value of E-Bar that is very different than would be calculated using the design basis approach. The accident dose analyses become disconnected from plant operation and the LCO becomes essentially meaningless. It also results in a TS limit that can vary during operation as different values for E-Bar are determined.

Additionally, since the concern associated with the coolant activity is the acute dose that the operators and the public might receive in the event of a postulated accident, the manner in which E-Bar is calculated gives undue importance to nuclides that are primarily beta-emitters. Beta radiation will contribute to a skin dose, but not to the whole body dose. Dose limits for the general population do not include consideration of the beta-skin dose.

Since the purpose of the LCO on gross activity is to support the dose analyses for design basis accidents, it would be more appropriate to have the LCO apply to the noble gas concentration in the primary coolant. Thus, it is recommended that the current LCO on gross coolant activity be replaced by an LCO on reactor coolant noble gas activity, which is based on Dose Equivalent Xe-133. The determination of Dose Equivalent Xe-133 will be performed in a similar manner to that currently used in determining DE I-131, except that the calculation of Dose Equivalent Xe-133 is based on the acute dose to the whole body and considers the noble gases which are significant in terms of contribution to whole body dose. Some noble gas isotopes are not included due to low concentration, short half life, or small dose conversion factor. The calculation of Dose Equivalent Xe-133 would use either the average gamma disintegration energies for the nuclides or the effective dose conversion factors from Table III.1 of EPA Federal Guidance Report No. 12. Using this approach, the limit on the amount of noble gas activity in the primary coolant would not fluctuate with variations in the calculated values of E-Bar.

The Technical Specifications developed for the AP600 advanced reactor utilized an LCO for primary coolant Dose Equivalent Xe-133 activity in place of the LCO on gross specific activity based on E-Bar. This approach was approved by the NRC.

Typically, the radiological consequence analyses for accidents that take into account the pre-existing iodine spike do not use the elevated primary coolant iodine concentrations permitted by the LCO for operation at power levels below 80% Rated Thermal Power. Instead, the analyses use the primary coolant concentration associated with 100% power operation.

It is not expected that plant operation at the reduced power levels would result in iodine concentrations that exceed the upper limit defined for full power operation. However, the current LCO allows operation at higher iodine concentrations than that at which the plant analyses are performed.

The curve in Figure 3.4.17-1 was not included in the Technical Specifications developed for the AP600, and the LCO for primary coolant iodine activity was approved by the NRC without the curve.

The Completion Time for revised TS 3.4.17 Required Action B.1 will require restoration of Dose Equivalent Xe-133 to within limit in 48 hours. This is

consistent with the Completion Time for current Required Action A.2 for Dose Equivalent I-131. The Completion Time of 48 hours for revised Required Action B.1 is acceptable since it is expected that, if there were a noble gas spike, the normal coolant noble gas concentration would be restored within this time period. Also, there is a low probability of an accident occurring during this time period.

The Applicability is changed from MODES 1, 2, and MODE 3 with RCS Temperature > 500 F to MODES 1, 2, 3 and 4. In MODES 1, 2, 3, and 4, operation within the LCO limits for DOSE EQUIVALENT I-131 and DOSE EQUIVALENT XE-133 is necessary to limit the potential consequences of a steam line break or steam generator tube rupture. In Modes 5 and 6, the steam generators are not being used for decay heat removal, the RCS and steam generators are depressurized, and primary to secondary leakage is minimal. Therefore, the monitoring of RCS specific activity is not required.

TS 3.7.12, "Auxiliary Building Special Ventilation System"

This LAR proposes to revise TS SR 3.7.12.3. This surveillance requirement verifies that each train of the Auxiliary Building Special Ventilation System (ABSVS) train can produce a negative pressure within a certain duration after initiation. The current duration is 6 minutes. The LAR proposes to revise this duration to 20 minutes. In the current LOCA analysis, it is assumed that each ABSVS train can produce a negative pressure in the auxiliary building special ventilation zone (ABSVZ) within 6 minutes following the event. The current LOCA analysis is based on the TID source term. With the AST and associated fission product release times for the LOCA per RG 1.183, the new analysis is able to show dose consequence values less than the limits with a start time of 20 minutes for the ABSVS. In order for the ABSVS to draw a negative pressure the ABSVZ boundary needs to be OPERABLE. Technical Specification Bases for the LCO indicates that in order to consider the ABSVZ boundary OPERABLE the openings in the boundary must be reduced to less than 10 ft^2 within 6 minutes. Reducing the ABSV boundary openings to less than 10 ft^2 may require operator action outside of the control room. Thus, the 6 minute time frame is a considered to be a critical operator action. Increasing the allowable time from 6 minutes to 20 minutes is a benefit to the operations personnel and reduces the potential for human error.

TS 3.7.13, "Spent Fuel Pool Special Ventilation System"

This TS and associated Bases will be removed from Technical Specifications. The current PINGP analysis for a FHA in the SFP area does not model operation of the SFPSVS without the filters in service. The new analysis for AST is performed with the most limiting release point χ/Q values to the Control Room for the FHA inside of containment and in the SFP area. In both cases, the FHA analysis is performed without taking credit for filtration or isolation of the

respective area. Thus, the SFPSVS is not required in order to meet the dose consequence limits.

TS 3.9.4, "Containment Penetrations"

This TS and associated Bases are being replaced with a TS and Bases on Decay Time, which requires that recently irradiated fuel (<50 hours) cannot be handled. This change is acceptable because the FHA analysis does not credit containment closure when handling fuel 50 hours after shutdown. Therefore, the containment penetrations TS is no longer needed.

TS 5.5.9, "Ventilation Filter Testing Program"

This LAR proposes to revise TS 5.5.9 by deleting the Spent Fuel Pool Special and Inservice Purge Ventilation System (SFPSIPVS) from the Ventilation Filter Testing program. The current PINGP analysis for a FHA in the spent fuel pool (SFP) does not model operation of the SFPSIPVS without the filters in service. The new analysis for AST is performed with the most limiting release point χ/Q values to the Control Room for the FHA inside of containment and in the SFP area. In both cases, the FHA analysis is performed without taking credit for filtration or isolation of the respective area. Thus, the SFPSIPVS is not required in order to meet the dose consequence limits. Therefore, testing is not necessary for the SFPSIPVS filters.

TS 5.5.9b and TS 5.5.9d

This LAR proposes to revise TS 5.5.9b and TS 5.5.9d to reflect that the Shield Building Ventilation System (SBVS) is no longer applicable to charcoal adsorber testing. The current PINGP analysis for the LOCA credits the Shield Building Ventilation System (SBVS) charcoal filter, in addition to the HEPA filter, for removal of iodines. The AST analysis for the LOCA only credits the SBVS HEPA filter and takes no credit for the charcoal adsorber. As the SBVS charcoal filter is not credited in the dose consequence analysis, testing of the charcoal adsorber is not required.

TS 5.5.9c

This LAR proposes to revise TS 5.5.9c to delete the methyl iodide penetration values for the SBVS and SFPSIPVS and to revise the methyl iodide penetration value for the ABSVS. Deletion of the methyl iodide penetration values for the SBVS and SFPSIPVS is acceptable because the SFPSIPVS is not required in order to meet dose consequence limits, so testing of the charcoal adsorbers for the SFPSIPVS is no longer necessary. The SBVS charcoal filter is not credited in the dose consequence analysis, so testing of the charcoal adsorber is not required. The revision of the methyl iodide penetration value for ABSVS is necessary in order to achieve acceptable dose consequences in the control room

for the LOCA analysis. The current requirement in Technical Specification 5.5.9.c for the ABSVS charcoal adsorber is a methyl iodide penetration less than 15% penetration. The ABSVZ charcoal filter efficiency is increased from 70% to 80%, which will increase the additional 10% iodine loading on the charcoal and proportionately increase the filter shine dose. Since the ABSVZ charcoal filter shine dose is calculated using 100% charcoal filter efficiency, it bounds the 10% dose increase due to increased ABSVS charcoal filter efficiency. The 80% credited efficiency corresponds to a penetration testing value of 10%, which is consistent with Generic Letter 99-02, "Laboratory Testing of Nuclear-Grade Activated Charcoal."

TS 5.5.9e

This LAR proposes to revise TS 5.5.9e to delete the test face velocity values for the SBVS and SFPSIPVS. This is acceptable because the SFPSIPVS is not required in order to meet dose consequence limits, so testing of the charcoal adsorbers for the SFPSIPVS is no longer necessary. The SBVS charcoal filter is not credited in the dose consequence analysis, so testing of the charcoal adsorber is not required.

TS 5.5.14, "Containment Leakage Rate Testing Program"

This LAR proposes to revise values for the primary containment leakage rate. This TS provides the containment leakage rate testing program. TS 5.5.14c provides values for primary containment leakage. The current PINGP analysis for the LOCA uses a maximum allowable primary containment leak rate of 0.25% of containment air weight per day. For pipes connected to the ABSVZ, a leak rate of 0.10% of containment air weight per day is used. For pipes connected to systems that are exterior to both the Shield Building and the ABSVZ, a leak rate of 0.01% of containment air weight per day is used. In order to achieve acceptable dose consequences in the control room and the technical support center for the LOCA using AST, it was necessary to reduce the assumed containment leak rates to (1) Maximum allowable primary containment leak rate of 0.15% of containment weight per day, (2) For pipes connected to the ABSVZ, a leak rate of 0.06% of containment weight per day, and (3) For pipes connected to systems that are exterior to both the Shield Building and the ABSVZ, a leak rate of 0.006% of containment air weight per day. This technical specification change is being made to provide consistency with the dose consequence analysis.

Proposed TS 5.5.16, "Control Room Habitability Program"

This LAR proposes to revise the proposed TS 5.5.16, to delete references to TID dose consequence of 5 rem whole body. This TS was proposed by letter dated June 24, 2009 (ADAMS Accession #ML091760988). This letter proposed the adoption of TSTF-448 for PINGP. This TS provides the requirements for the

control room habitability program. This TS included references to both AST and TID dose consequence because at the time of submittal, PINGP was both a TID and AST plant (FHA). This is acceptable because the reference to the TID methodology will no longer be applicable to PINGP.

4.0 REGULATORY ANALYSIS

4.1 Applicable Regulatory Requirements/Criteria

Title 10 Code of Federal Regulations Section 50.36, "Technical specifications"

10 CFR 50.36:

(c) Technical specifications will include items in the following categories:

2) Limiting conditions for operation.

(i) Limiting conditions for operation are the lowest functional capability or performance levels of equipment required for safe operation of the facility. When a limiting condition for operation of a nuclear reactor is not met, the licensee shall shut down the reactor or follow any remedial action permitted by the technical specifications until the condition can be met.

(ii) A technical specification limiting condition for operation of a nuclear reactor must be established for each item meeting one or more of the following criteria:

(A) Criterion 1. Installed instrumentation that is used to detect, and indicate in the control room, a significant abnormal degradation of the reactor coolant pressure boundary.

The systems proposed for removal from the Technical Specifications are not used to detect degradation of the reactor coolant pressure boundary. The systems are not an initial condition of a design basis accident or transient analysis that either assumes the failure of, or presents a challenge to the integrity of a fission product barrier.

(B) Criterion 2. A process variable, design feature, or operating restriction that is an initial condition of a design basis accident or transient analysis that either assumes the failure of or presents a challenge to the integrity of a fission product barrier.

The systems proposed for removal from the Technical Specifications are not process variables, design features, or pose any operating restrictions that are an initial condition of a design basis accident or transient analysis that either assumes the failure of, or presents a challenge to the integrity of a fission product barrier.

(C) Criterion 3. A structure, system, or component that is part of the primary success path and which functions or actuates to mitigate a design basis accident or transient that either assumes the failure of or presents a challenge to the integrity of a fission product barrier.

The results of the revised accident analyses based on the alternative source term no longer credits the items proposed for removal from the Technical Specifications as accident mitigation features. The items proposed for removal from the Technical Specifications do not present a challenge to the integrity of a fission product barrier. These systems are not primary success paths for mitigation of the DBA.

3) Surveillance requirements. Surveillance requirements are requirements relating to test, calibration, or inspection to assure that the necessary quality of systems and components is maintained, that facility operation will be within safety limits, and that the limiting conditions for operation will be met.

The reactor coolant system specific activity is a limiting condition for operation which meets Criterion 2 of 10 CFR 50.36. This license amendment request proposes to replace the current TS limits on reactor coolant gross specific activity with limits on reactor coolant noble gas activity. The noble gas activity would be based on Dose Equivalent Xe-133 and would take into account the noble gas activity in the reactor coolant. Figure 3.4.17-1, which reflects reactor coolant iodine concentration as a function of reactor power, is deleted and replaced with a single value that is applicable to any power level. With these changes, the Technical Specifications will continue to provide limiting conditions for operation with performance levels for safe operation of the facility and appropriate remedial actions.

This license amendment request also proposes to reduce the Surveillance Requirements for the reactor coolant system and change the Surveillance Requirement for the auxiliary building special ventilation system. With these changes, the Technical Specifications provide Surveillance Requirements which assure that the limiting conditions for operation continue to be met.

Thus, with the changes proposed in this license amendment request, the requirements of 10 CFR 50.36 continue to be met.

Title 10 Code of Federal Regulations Section 50.67, "Alternate Source Term"

On December 23, 1999, the NRC published 10 CFR 50.67, "Accident Source Term," in the Federal Register. This regulation provides a mechanism for licensed power reactors to replace the current accident source term used in the

DBA analysis with an alternative source term. The direction provided in 10 CFR 50.67 is that licensees who seek to revise their current accident source term in design basis radiological consequence analyses shall apply for a license amendment request under 10 CFR 50.90.

General Design Criteria

The construction of the Prairie Island Nuclear Generating Plant was significantly complete prior to issuance of 10 CFR 50, Appendix A, General Design Criteria (Appendix A GDC). The Prairie Island Nuclear Generating Plant was designed and constructed to comply with the Atomic Energy Commission General Design Criteria as proposed on July 10, 1967 (AEC GDC) as described in the plant Updated Safety Analysis Report. AEC GDC proposed criteria 49 and 56 provide guidance applicable to containment integrity which may be affected by the changes proposed in this license amendment request. Furthermore, the Prairie Island Nuclear Generating Plant is committed to selected Appendix A GDC, including Criterion 19, which provides design guidance for the post accident control room doses. These AEC GDC and Appendix A GDC continue to be met as follows.

> AEC GDC Criterion 49 - Containment Design Basis
>
> The containment structure, including access openings and penetrations, and any necessary containment heat removal systems shall be designed so that the containment structure can accommodate without exceeding the design leakage rate the pressures and temperatures resulting from the largest credible energy release following a loss-of-coolant accident, including a considerable margin for effects from metal-water or other chemical reactions, that could occur as a consequence of failure of emergency core cooling systems.
>
> AEC GDC Criterion 56 - Provisions for Testing of Penetrations
>
> Provisions shall be made for testing penetrations which have resilient seals or expansion bellows to permit leak tightness to be demonstrated at design pressure at any time.

TS 3.9.4, "Containment Penetrations," is being removed from TS and replaced with a Decay Time TS. The Decay Time TS requires that recently irradiated fuel (<50 hours) cannot be handled. This change is acceptable because the FHA analysis does not credit containment closure when handling fuel 50 hours after shutdown. Therefore, the containment penetrations TS is no longer needed. With the changes proposed in this license amendment request, the requirements of AEC GDC 49 and 56 continue to be met and the plant Technical Specifications will continue to provide the basis for safe plant operation.

Criterion 19 - Control room

A control room shall be provided from which actions can be taken to operate the nuclear power unit safely under normal conditions and to maintain it in a safe condition under accident conditions, including loss-of-coolant accidents. Adequate radiation protection shall be provided to permit access and occupancy of the control room under accident conditions without personnel receiving radiation exposures in excess of 5 rem whole body, or its equivalent to any part of the body, for the duration of the accident. Equipment at appropriate locations outside the control room shall be provided (1) with a design capability for prompt hot shutdown of the reactor, including necessary instrumentation and controls to maintain the unit in a safe condition during hot shutdown, and (2) with a potential capability for subsequent cold shutdown of the reactor through the use of suitable procedures.

The results from the dose analyses show that the predicted dose consequence results are within the allowable regulatory limits. The revised radiological dose to the control room operator allows for a revised unfiltered air in-leakage assumption that provides a conservative margin over that determined by air in-leakage testing. These analyses demonstrate that control room personnel doses are within the limits of Criterion 19.

Thus, with the changes proposed in this license amendment request, the requirements of Appendix A GDC Criterion 19 continue to be met and the plant Technical Specifications will continue to provide the basis for safe plant operation.

RG 1.183, "Alternative Radiological Source Terms for Evaluating Design Basis Accidents at Nuclear Power Reactors"

The proposed AST methodology is consistent with the guidance of Regulatory Guide (RG) 1.183, "Alternative Radiological Source Terms for Evaluating Design Basis Accidents at Nuclear Power Reactors," (Reference 4) except where alternate methods for complying with the specified portions of the NRCs regulations have been used. Documentation of conformance to RG 1.183 and the discussion of any alternate methods are presented in Attachment 4.

Environmental Qualification (EQ)

NSPM is not proposing to modify the equipment qualification design basis to adopt AST. The PINGP EQ analysis will continue to be based on TID-14844 assumptions.

4.2 Precedent

The NRC has previously approved implementation of the AST methodology at a number of nuclear power plants. In a license amendment request dated March 22, 2007 (ADAMS Accession No. ML070890474), the South Texas Project Nuclear Operation Company (STPNOC) proposed to adopt the AST methodology. This license amendment request is similar to the STP submittal in that both applications have a similar format, content and level of detail. The NRC reviewed and approved the AST license amendment request for STP in a Safety Evaluation dated March 6, 2008 (ADAMS Accession No. ML080160013).

In a license amendment request dated April 26, 2004 (ADAMS Accession No. ML041280067), PSEG Nuclear LLC proposed to adopt the AST methodology for Salem Units 1 and 2. This license amendment request is similar to the PSEG submittal in that PSEG also proposed deletion of a ventilation filtration system from the Technical Specifications based on alternate source term methodology. The NRC reviewed and approved the AST license amendment request for PSEG in a Safety Evaluation dated February 17, 2006 (ADAMS Accession Number ML060040322).

In a license amendment request dated July 31, 2002 (ADAMS Accession No. ML022200382), TVA proposed to adopt the AST methodology for Browns Ferry Nuclear Plants Units 1, 2 and 3. This license amendment request is similar to the TVA request in that Browns Ferry also proposed a TS on Decay Time based on the AST methodology. The NRC reviewed and approved the AST license amendment request for TVA in a Safety Evaluation dated September 27, 2004 (ADAMS Accession Number ML042730028).

4.3 Significant Hazards Consideration

NSPM has evaluated whether or not a significant hazards consideration is involved with the proposed amendment by focusing on the three standards set forth in 10 CFR 50.92, "Issuance of amendment," as discussed below:

1. **Does the proposed amendment involve a significant increase in the probability or consequences of an accident previously evaluated?**

   Response: No

   With this change, Prairie Island Nuclear Generating Plant (PINGP) proposes to implement 10 CFR 50.67, alternative source term methodologies, implement approved industry improved Standard Technical Specification traveler, TSTF-490, and revise TS 3.3.7, "Spent Fuel Pool Special Ventilation System Actuation Instrumentation," TS 3.7.12, "Auxiliary Building Special Ventilation System," TS 3.7.13, "Spent

Fuel Pool Special Ventilation System," TS 3.9.4, "Containment Penetrations," TS 5.5.9, "Ventilation Filter Testing Program," TS 5.5.14, "Containment Leakage Rate Testing Program," and TS 5.5.16, "Control Room Habitability Program."

Alternative source term (AST) calculations have been performed for PINGP that demonstrate the dose consequences are consistent with the regulatory limits of 10 CFR 50.67 and the guidance of RG 1.183. The use of the AST methodology changes the regulatory assumptions regarding the analytical treatment of the design basis accidents and has no direct effect on the probability of any accident. AST methods have been utilized in the analysis of the limiting design basis accidents, as follows: loss of coolant accident (LOCA), fuel handling accident (FHA), main steam line break (MSLB), steam generator tube rupture (SGTR), control rod ejection accident (CREA), and locked rotor accident (LRA). The results of the analyses, which include the proposed changes to the Technical Specifications, demonstrate that the dose consequences of these limiting events are within regulatory limits.

Reactor coolant specific activity is not an initiator for any accident previously evaluated. The Completion Time when reactor coolant gross activity is not within limit is not an initiator for any accident previously evaluated. The current variable limit on primary coolant iodine concentration is not an initiator to any accident previously evaluated. As a result, the proposed change does not significantly increase the probability of an accident. The proposed change will limit reactor coolant noble gases to concentrations consistent with the accident analyses. The proposed change to the Completion Time has no impact on the consequences of any design basis accident since the consequences of an accident during the extended Completion Time are the same as the consequences of an accident during the current Completion Time. As a result, the consequences of any accident previously evaluated are not significantly increased.

The Spent Fuel Pool Special Ventilation System (SFPSVS) is no longer credited for filtration or isolation. The Containment Penetrations TS is being replaced with a TS on Decay Time, which requires that recently irradiated fuel (<50 hours) cannot be handled. The Ventiliation Filter Testing Program TS is being revised to reflect changes to filter testing. As a result of these TS changes, the probability or consequences of an accident previously evaluated are not significantly increased.

Therefore, the proposed changes do not involve a significant increase in the probability or consequences of an accident previously evaluated.

2. Does the proposed amendment create the possibility of a new or different kind of accident from any accident previously evaluated?

Response: No

With this change, PINGP proposes to implement 10 CFR 50.67, alternative source term methodologies, implement approved industry improved Standard Technical Specification traveler, TSTF-490, and revise TS 3.3.7, "Spent Fuel Pool Special Ventilation System Actuation Instrumentation," TS 3.7.12, "Auxiliary Building Special Ventilation System," TS 3.7.13, "Spent Fuel Pool Special Ventilation System," TS 3.9.4, "Containment Penetrations," TS 5.5.9, "Ventilation Filter Testing Program," TS 5.5.14, "Containment Leakage Rate Testing Program," and TS 5.5.16, "Control Room Habitability Program."

The AST methodology is not an accident initiator, as it is a method used to estimate resulting accident doses. The proposed operation of plant systems affected by this change does not create the possibility of a new or different kind of accident previously evaluated. Changes that are proposed to plant equipment (ventilation systems) pertain to accident mitigation equipment. The operation or mis-operation of these ventilation systems do not initiate any accidents. The radiological consequence analyses demonstrate that the proposed changes are acceptable. The results of the analyses, which include the proposed changes to the Technical Specifications, demonstrate that the dose consequences of these limiting events are within regulatory limits.

The proposed change in specific activity limits does not alter any physical part of the plant nor does it affect any plant operating parameter. The change does not create the potential of a new or different kind of accident from accident previously evaluated.

Therefore, the proposed changes do not create the possibility of a new or different kind of accident from any previously evaluated.

3. Does the proposed amendment involve a significant reduction in a margin of safety?

Response: No

With this change, PINGP proposes to implement 10 CFR 50.67, alternative source term methodologies, implement approved industry improved Standard Technical Specification traveler, TSTF-490, and revise TS 3.3.7, "Spent Fuel Pool Special Ventilation System Actuation Instrumentation," TS 3.7.12, "Auxiliary Building Special Ventilation System," TS 3.7.13, "Spent Fuel Pool Special Ventilation System," TS

3.9.4, "Containment Penetrations," TS 5.5.9, "Ventilation Filter Testing Program," TS 5.5.14, "Containment Leakage Rate Testing Program," and TS 5.5.16, "Control Room Habitability Program."

The proposed implementation of the AST methodology is consistent with RG 1.183. The radiological consequences of these accidents are within the regulatory acceptance criteria associated with the use of the AST methodology. The doses at the exclusion area and low population zone boundaries and in the control room are consistent with the regulatory limits of 10 CFR 50.67 and the guidance of RG 1.183. The margin of safety for the radiological consequences of these accidents is considered to be that provided by meeting the applicable regulatory limits, which are set at or below 10 CFR 50.67 limits.

The proposed change to revise the limits on noble gas radioactivity in the primary coolant is consistent with the assumptions in the safety analyses and will ensure the monitored values protect the initial assumptions in the safety analyses.

Therefore, the proposed changes do not involve a significant reduction in a margin of safety.

Based on the above, NSPM concludes that the proposed amendment does not involve a significant hazards consideration under the standards set forth in 10 CFR 50.92(c) and, accordingly, a finding of "no significant hazards consideration" is justified.

4.4 Conclusions

In conclusion, based on the considerations discussed in above, (1) there is reasonable assurance that the health and safety of the public will not be endangered by operation in the proposed manner, (2) such activities will be conducted in compliance with the Commission's regulations, and (3) the issuance of the amendment will not be inimical to the common defense and security or to the health and safety of the public.

5.0 ENVIRONMENTAL CONSIDERATION

A review has determined that the proposed amendment would change a requirement with respect to installation or use of a facility component located within the restricted area, as defined in 10 CFR 20, or would change an inspection or surveillance requirement. However, the proposed amendment does not involve (i) a significant hazards consideration, (ii) a significant change in the types or significant increase in the amounts of any effluent that may be released offsite, or (iii) a significant increase in individual or cumulative occupational radiation exposure. Accordingly, the proposed amendment meets the eligibility criterion for categorical exclusion set forth in 10 CFR 51.22(c)(9). Therefore, pursuant to 10 CFR 51.22(b), no environmental impact statement or environmental assessment need be prepared in connection with the proposed amendment.

4 REFERENCES

1. NRC Generic Letter 2003-01, "Control Room Habitability".

2. TID 14884, "Calculation of Distance Factors For Power and Test Reactor Sites."

3. NUREG 0800, Section 15.0.1, "Radiological Consequence Analysis Using Alternative Source Terms."

4. NRC Regulatory Guide 1.183, "Alternative Radiological Source Terms for Evaluating Design Basis Accidents at Nuclear Power Reactors," dated July 2000.

5. Prairie Island Nuclear Generating Plant Updated Safety Analysis Report.

6. NUREG 1465, "Alternative Source Term".

7. NMC Letter L-PI-08-052," License Amendment Request (LAR) to Revise the Loss of Coolant Accident (LOCA) and Main Steam Line Break (MSLB) Accident Dose Consequences Analysis and Affected Technical Specifications (TS)", dated June 26, 2008.

8. Xcel Energy Letter L-PI-09-033, "Supplement to License Amendment Request (LAR) to Revise the Loss of Coolant Accident (LOCA) and Main Steam Line Break (MSLB) Accident Dose Consequences Analysis and Affected Technical Specifications (TS)," dated March 16, 2009.

9. Xcel Energy Letter L-PI-09-056, "Supplement to License Amendment Request (LAR) to Revise the Loss of Coolant Accident (LOCA) and Main Steam Line Break (MSLB) Accident Dose Consequences Analysis and Affected Technical Specifications (TS)," dated May 01, 2009.

10. NRC Regulatory Guide 1.194, "Atmospheric Relative Concentrations for Control Room Radiological Habitability Assessments at Nuclear Power Plants," dated June 2003.

11. NRC Regulatory Guide 1.23, "Onsite Meteorological Programs."

12. NRC Letter "Prairie Island Nuclear Generating Plant, Units 1 and 2 – Issuance of Amendments Re: Selective Implementation of Alternative Source Term for Fuel Handling Accidents," dated September 10, 2004.

13. NMC Letter L-PI-04-001, "License Amendment Request for Selective Implementation of Alternative Source Term for Fuel Handling Accidents," dated January 20, 2004.

14. NUREG/CR-6331, "Atmospheric Relative Concentrations in Building Wakes," Revision 1.

15. NRC Letter Prairie Island Nuclear Generating Plant, Units 1 and 2, "Issuance of Amendments Re: Revision to Loss of Coolant Accident (LOCA) and Main Steam Line Break (MSLB) Accident Dose Consequences Analysis and Affected Technical Specifications (TS)," dated June 19, 2009.

16. NMC Letter L-PI-04-082, "Supplement to License Amendment Request for Selective Implementation of Alternative Source Term for Fuel Handling Accidents," dated July 13, 2004.

17. NUREG/CR-6604, RADTRAD, "A Simplified Model for Radionuclide Transport and Removal and Dose Estimation," December 1997.

18. ICRP Publication 30, "Limits for Intakes of Radionuclides by Workers," 1979.

19. Environmental Protection Agency, Federal Guidance Report 12, EPA-402-R-93-081, "External Exposure to Radionuclides in Air, Water, and Soil,

20. Environmental Protection Agency, Federal Guidance Report 11, EPA-520/1-88-020, "Limiting Values of Radionuclide Intake and Air Concentration and Dose Conversion Factors for Inhalation, Submersion, and Ingestion."

21. US NRC NUREG 0800, Section 6.5.2, "Containment Spray as a Fission Product Cleanup System," Revision 2.

22. NUREG/CR-5950, "Iodine Evolution and pH Control," December 1992.

23. Oak Ridge National Laboratory Report ORNL-TM-2412, Part IV, "Design Considerations of Reactor Containment Spray Systems – Part IV, Calculation of Iodine-Water Partition Coefficients," January 1970.

24. EPRI Final Report No. EPRI NP-1271, "Nuclear Power Plant Related Iodine Partition Coefficients," December 1979.

25. Technical Specification 3.7.13, "Spent Fuel Pool Special Ventilation System (SFPSVS)."

26. Technical Specification 3.6.9, "Shield Building Ventilation System (SBVS)."

27. Technical Specification 3.4.14, "RCS Operational Leakage."

28. NUREG 0737, "Clarification of TMI Action Plan Requirements," November 1980.

ATTACHMENT 1 to ENCLOSURE

Technical Specification Pages (Markup)

1.1-2
1.1-3
1.1-4
5.0-23
5.0-28
5.0-30 (Proposed TS)
5.0-31 (Proposed TS)
3.3.7-1
3.3.7-2
3.3.7-3
3.3.7-4
3.4.17-1
3.4.17-2
3.4.17-3
3.4.17-4
3.7.12-2
3.7.13-1
3.7.13-2
3.9.4-1
3.9.4-2

20 Pages Follow

1.1 Definitions (continued)

CHANNEL CHECK	A CHANNEL CHECK shall be the qualitative assessment, by observation, of channel behavior during operation. This determination shall include, where possible, comparison of the channel indication and status to other indications or status derived from independent instrument channels measuring the same parameter.
CHANNEL OPERATIONAL TEST (COT)	A COT shall be the injection of a simulated or actual signal into the channel as close to the sensor output as practicable to verify OPERABILITY of all devices in the channel required for channel OPERABILITY. The COT shall include adjustments, as necessary, of the required alarm, interlock, and trip setpoints required for channel OPERABILITY such that the setpoints are within the necessary range and accuracy. The COT may be performed by means of any series of sequential, overlapping, or total channel steps.
CORE ALTERATION	CORE ALTERATION shall be the movement of any fuel, sources, or reactivity control components, within the reactor vessel with the vessel head removed and fuel in the vessel. Suspension of CORE ALTERATIONS shall not preclude completion of movement of a component to a safe position.
CORE OPERATING LIMITS REPORT (COLR)	The COLR is the unit specific document that provides cycle specific parameter limits for the current reload cycle. These cycle specific parameter limits shall be determined for each reload cycle in accordance with Specification 5.6.5. Plant operation within these limits is addressed in individual Specifications.
DOSE EQUIVALENT I-131	DOSE EQUIVALENT I-131 shall be that concentration of I-131 (microcuries/gram) that alone would produce the same ~~thyroid~~ dose when inhaled as the combined activities of isotopes I-131, I-132, I-133, I-134 and I-135 actually present. The determination of DOSE EQUIVALENT I-131 shall be performed using Committed Dose Equivalent (CDE) or Committed Effective Dose Equivalent (CEDE) dose conversion factors from Table 2.1 of EPA Federal Guidance Report No. 11, "Limiting Values of Radionuclide Intake And Air Concentration and Dose Conversion Factors for Inhalation, Submersion and Ingestion."~~as the quantity and isotopic mixture of I-131, I-132, I-133, I-134, and I-135 actually present. The thyroid~~

~~dose conversion factors used for this calculation shall be those listed in Table III of TID-14844, AEC, 1962, "Calculation of Distance Factors for Power and Test Reactor Sites".~~

1.1 Definitions (continued)

~~$\bar{E}$ AVERAGE DISINTEGRATION ENERGY~~	~~$\bar{E}$ shall be the average (weighted in proportion to the concentration of each radionuclide in the reactor coolant at the time of sampling) of the sum of the average beta and gamma energies per disintegration (in MeV) for isotopes, other than iodines, with half lives > 15 minutes, making up at least 95% of the total noniodine activity in the coolant.~~
DOSE EQUIVALENT XE-133	DOSE EQUIVALENT XE-133 shall be that concentration of Xe-133 (microcuries per gram) that alone would produce the same acute dose to the whole body as the combined activities of noble gas nuclides Kr-85m, Kr-85, Kr-87, Kr-88, Xe-131m, Xe-133m, Xe-133, Xe-135m, Xe-135, and Xe-138 actually present. If a specific noble gas nuclide is not detected, it should be assumed to be present at the minimum detectable activity. The determination of DOSE EQUIVALENT XE-133 shall be performed using effective dose conversion factors for air submersion listed in Table III.1 of EPA Federal Guidance Report No. 12, 1993, "External Exposure to Radionuclides in Air, Water, and Soil" or the average gamma disintegration energies as provided in ICRP Publication 38, "Radionuclide Transformations" or similar source.

LEAKAGE

LEAKAGE from the Reactor Coolant System (RCS) shall be:

a. Identified LEAKAGE

1. LEAKAGE, such as that from pump seals or valve packing (except reactor coolant pump (RCP) seal water injection or leakoff), that is captured and conducted to collection systems or a sump or collecting tank;

1.1 Definitions (continued)

2. LEAKAGE into the containment atmosphere from sources that are both specifically located and known either not to interfere with the operation of leakage detection systems or not to be pressure boundary LEAKAGE; or

3. RCS LEAKAGE through a steam generator to the Secondary System (primary to secondary LEAKAGE);

b. Unidentified LEAKAGE

All LEAKAGE (except RCP seal water injection or leakoff) that is not identified LEAKAGE;

c. Pressure Boundary LEAKAGE

LEAKAGE (except primary to secondary LEAKAGE) through a nonisolable fault in an RCS component body, pipe wall, or vessel wall.

MASTER RELAY TEST

A MASTER RELAY TEST shall consist of energizing all master relays in the channel required for channel OPERABILITY and verifying the OPERABILITY of each required master relay. The MASTER RELAY TEST shall include a continuity check of each associated required slave relay. The MASTER RELAY TEST may be performed by means of any series of sequential, overlapping, or total steps.

MODE

A MODE shall correspond to any one inclusive combination of core reactivity condition, power level, average reactor coolant temperature, and reactor vessel head closure bolt tensioning specified in Table 1.1-1 with fuel in the reactor vessel.

5.5 Programs and Manuals (continued)

5.5.9 Ventilation Filter Testing Program (VFTP)

A program shall be established to implement the following required testing of the Control Room Special Ventilation System (CRSVS), Auxiliary Building Special Ventilation System (ABSVS), and Shield Building Ventilation System (SBVS)~~, and the Spent Fuel Pool Special and Inservice Purge Ventilation System (SFPSIPVS)~~ at least once each 24 months.

Demonstrate for the ABSVS, SBVS, and CRSVS~~, and SFPSIPVS~~ systems that:

a. An inplace DOP test of the high efficiency particulate air (HEPA) filters shows a penetration and system bypass < 0.05% (for DOP, particles having a mean diameter of 0.7 microns);

b. A halogenated hydrocarbon test of the inplace charcoal adsorber shows a penetration and system bypass < 0.05% (SBVS not applicable);

c. A laboratory test of a sample of the charcoal adsorber, when obtained as described in Regulatory Guide 1.52, Revision 2, shows the methyl iodide penetration less than: 1) 10~~5~~% penetration for ABSVS, ~~2) 15% penetration for SBVS, 3) 7.5% penetration for the SFPSIPVS,~~ and 42) 2.5% penetration for the CRSVS when tested in accordance with ASTM D3803-1989 at a temperature of 30°C and 95% relative humidity (RH);

d. The pressure drop across the combined HEPA filters and the charcoal adsorbers (SBVS not applicable to charcoal adsorbers) is less than 6 inches of water at the system flowrate ± 10%;
and

e. A laboratory test of a sample of the charcoal adsorber shall have filter test face velocities greater than or equal to the following values for each system: 1) 54 fpm for the CRSVS, and 2) 72 fpm for the ABSVS~~, 3) 47 fpm for the SBVS, and 4) 47 fpm for the SFPSIPVS~~.

5.5 Programs and Manuals (continued)

5.5.14 Containment Leakage Rate Testing Program

a. A program shall be established to implement the leakage rate testing of the containment as required by 10 CFR 50.54(o) and 10 CFR 50, Appendix J, Option B, as modified by approved exemptions. This program shall be in accordance with the guidelines contained in Regulatory Guide 1.163, "Performance-Based Containment Leak-Test Program," dated September 1995, as modified by the following exceptions:

1. Unit 1 is excepted from post-modification integrated leakage rate testing requirements associated with steam generator replacement.

2. Exception to NEI 94-01, "Industry Guideline for Implementing Performance-Based Option of 10 CFR 50, Appendix J", Section 9.2.3, to allow the following:

(i). The first Unit 1 Type A test performed after December 1, 1997 shall be performed by December 1, 2012.

(ii). The first Unit 2 Type A test performed after March 7, 1997 shall be performed by March 7, 2012.

b. The peak calculated containment internal pressure for the design basis loss of coolant accident is less than the containment internal design pressure, P_a, of 46 psig.

c. The maximum allowable primary containment leakage rate, L_a, at P_a, shall be 0.~~25~~15% of primary containment air weight per day. For pipes connected to systems that are in the auxiliary building special ventilation zone, the total leakage shall be less than 0.~~1~~06% of primary containment air weight per day at pressure P_a. For pipes connected to systems that are exterior to both the shield building and the auxiliary building special ventilation zone, the total leakage past isolation valves shall be less than 0.006~~1~~% of primary containment air weight per day at pressure P_a.

5.5 Programs and Manuals (continued)

5.5.16 Control Room Habitability Program [PROPOSED TS]

A Control Room Envelope (CRE) Habitability Program shall be established and implemented to ensure that CRE habitability is maintained such that, with an OPERABLE Control Room Special Ventilation System (CRSVS), CRE occupants can control the reactor safely under normal conditions and maintain it in a safe condition following a radiological event, hazardous chemical release, or a smoke challenge. The program shall ensure that adequate radiation protection is provided to permit access and occupancy of the CRE under design basis accident (DBA) conditions without personnel receiving radiation exposures in excess of 5 rem total effective dose equivalent (TEDE) for the duration of the accident. The program shall include the following elements:

a. The definition of the CRE and the CRE boundary.

b. Requirements for maintaining the CRE boundary in its design conditions including configuration control and preventive maintenance.

c. Requirements for (i) determining the unfiltered air in-leakage past the CRE boundary into the CRE in accordance with the testing methods and at the Frequencies specified in Sections C.1 and C.2 of Regulatory Guide 1.197, Demonstrating Control Room Envelope Integrity at Nuclear Power Reactors," Revision 0, May 2003, and (ii) assessing CRE habitability at the Frequencies specified in Sections C.1 and C.2 of Regulatory Guide 1.197, Revision 0.

d. Measurement of leakage through the outside air intake and boundary exhaust dampers at a Frequency of 18 months. The results shall be trended and used as part of the periodic assessment of the CRE boundary.

e. The quantitative limits on unfiltered air in-leakage into the CRE. These limits shall be stated in a manner to allow direct comparison to the unfiltered in-leakage measured by the testing described in paragraph c. The unfiltered air in-leakage limit for radiological challenges is the in-leakage flow rate assumed in the licensing basis analysis of DBA consequences.

5.5 Programs and Manuals

5.5.16 Control Room Habitability Program (continued)

f. The provisions of SR 3.0.2 are applicable to the Frequencies for assessing CRE habitability, determining CRE unfiltered in-leakage, and measuring outside air intake and boundary exhaust damper leakage and assessing the CRE boundary as required by paragraphs c and d, respectively.

~~3.3 INSTRUMENTATION~~

~~3.3.7 Spent Fuel Pool Special Ventilation System (SFPSVS) Actuation Instrumentation~~

~~LCO 3.3.7 The SFPSVS actuation instrumentation for each Function in Table 3.3.7-1 shall be OPERABLE.~~

~~APPLICABILITY: According to Table 3.3.7-1.~~

~~ACTIONS~~

~~NOTE~~
~~LCO 3.0.3 is not applicable.~~

~~CONDITION~~	~~REQUIRED ACTION~~	~~COMPLETION TIME~~
~~A. One channel inoperable.~~	~~A.1 Place one SFPSVS train in operation.~~	~~7 days~~

~~ACTIONS (continued)~~

~~CONDITION~~	~~REQUIRED ACTION~~	~~COMPLETION TIME~~
~~B. Two channels inoperable.~~	~~B.1.1 Place one SFPSVS train in operation.~~	~~Immediately~~
	~~AND~~	
	~~B.1.2 Enter applicable Conditions and Required Actions of LCO 3.7.13, "Spent Fuel Pool Special Ventilation System (SFPSVS)," for one train made inoperable by inoperable actuation instrumentation.~~	~~Immediately~~
	~~OR~~	
	~~B.2 Place both trains in operation.~~	~~Immediately~~
~~C. Required Action and associated Completion Time for Condition A or B not met during movement of irradiated fuel assemblies in the fuel pool enclosure.~~	~~C.1 Suspend movement of irradiated fuel assemblies in the fuel pool enclosure.~~	~~Immediately~~

~~SURVEILLANCE REQUIREMENTS~~

~~SURVEILLANCE~~	~~FREQUENCY~~
~~SR 3.3.7.1 Perform CHANNEL CHECK.~~	~~12 hours~~
~~SR 3.3.7.2 Perform COT.~~	~~92 days~~
~~SR 3.3.7.3 Perform CHANNEL CALIBRATION.~~	~~24 months~~

~~Table 3.3.7-1 (page 1 of 1)~~
~~SFPSVS Actuation Instrumentation~~

~~FUNCTION~~	~~APPLICABLE MODES OR SPECIFIED CONDITIONS~~	~~REQUIRED CHANNELS~~	~~SURVEILLANCE REQUIREMENTS~~	~~ALLOWABLE VALUE~~
~~1. Fuel Pool Enclosure Radiation~~	~~(a)~~	~~1 per train~~	~~SR 3.3.7.1~~ ~~SR 3.3.7.2~~ ~~SR 3.3.7.3~~	~~(b)~~

~~(a) During movement of irradiated fuel assemblies in the fuel pool enclosure.~~
~~(b) This value provided by the ODCM.~~

3.4 REACTOR COOLANT SYSTEM (RCS)

3.4.17 RCS Specific Activity

LCO 3.4.17 ~~The specific activity of the reactor coolant shall be within limits.~~RCS DOSE EQUIVALENT I-131 and DOSE EQUIVALENT XE-133 specific activity shall be within limits.

APPLICABILITY: MODES 1, ~~and~~ 2, 3 and 4.
~~MODE 3 with RCS average temperature (T_{avg}) ≥ 500°F.~~

ACTIONS

CONDITION	REQUIRED ACTION	COMPLETION TIME
A. DOSE EQUIVALENT I-131 ~~> 0.5 µCi/gm~~not within limit.	----------NOTE---------- LCO 3.0.4.c is applicable. ----------	
	A.1 Verify DOSE EQUIVALENT I-131 ~~within the acceptable region of Figure 3.4.17-1~~≤ 30 µCi/gm.	Once per 4 hours
	AND	
	A.2 Restore DOSE EQUIVALENT I-131 to within limit.	48 hours

ACTIONS (continued)

CONDITION	REQUIRED ACTION	COMPLETION TIME
B. ~~Gross specific activity of the reactor coolant not within limit~~DOSE EQUIVALENT XE-133 not within limit.	----------NOTE---------- LCO 3.0.4.c is applicable. ---------- B.1 ~~Be in MODE 3 with T_{avg} < 500°F~~Restore DOSE EQUIVALENT XE-133 to within limit.	~~6~~48 hours
C. Required Action and associated Completion Time of Condition A or B not met. OR DOSE EQUIVALENT I-131 ~~in the unacceptable region of Figure 3.4.17-1~~> 30 µCi/gm.	C.1 Be in MODE 3~~ with T_{avg} < 500°F~~. AND C.2 Be in MODE 5.	6 hours 36 hours

SURVEILLANCE REQUIREMENTS

SURVEILLANCE		FREQUENCY
SR 3.4.17.1	~~Verify reactor coolant gross specific activity $\leq 100/\bar{E}$ μCi/gm.~~ ----------NOTE---------- Only required to be performed in MODE 1. ---------- Verify reactor coolant DOSE EQUIVALENT XE-133 specific activity $\leq$ 580 μCi/gm.	7 days
SR 3.4.17.2	----------NOTE---------- Only required to be performed in MODE 1. ---------- Verify reactor coolant DOSE EQUIVALENT I-131 specific activity $\leq$ 0.5 μCi/gm.	14 days AND Between 2 and 6 hours after a THERMAL POWER change of $\geq$ 15% RTP within a 1 hour period.
~~SR 3.4.17.3~~	~~NOTE~~ ~~Not required to be performed until 31 days after a minimum of 2 effective full power days and 20 days of MODE 1 operation have elapsed since the reactor was last subcritical for $\geq$ 48 hours.~~ ~~----------~~ ~~Determine $\bar{E}$ from a sample taken in MODE 1 after a minimum of 2 effective full power days and 20 days of MODE 1 operation have elapsed since the reactor was last subcritical for $\geq$ 48 hours.~~	~~184 days~~

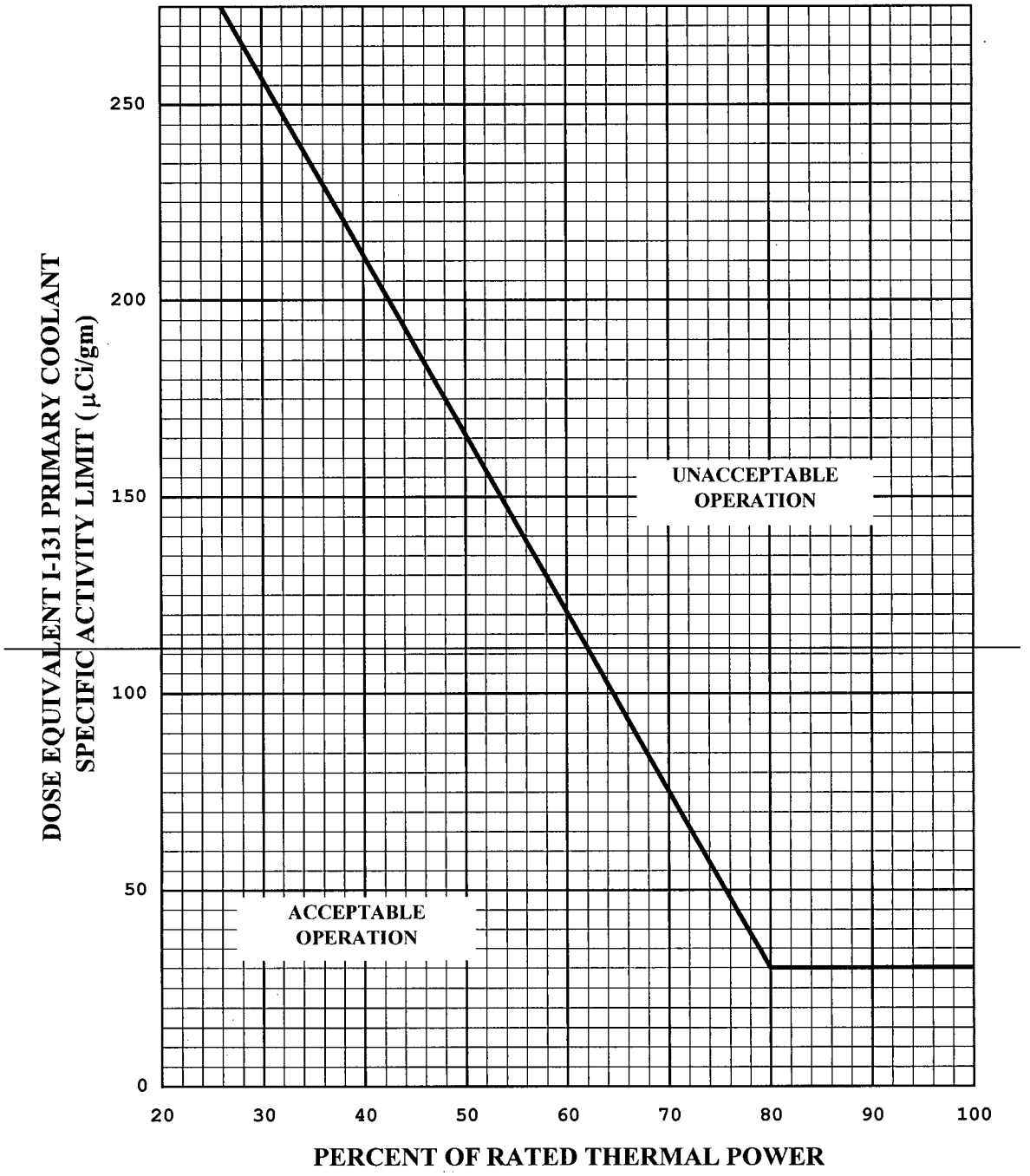

Figure 3.4.17-1 (page 1 of 1)
Reactor Coolant DOSE EQUIVALENT I-131 Specific Activity
Limit Versus Percent of RATED THERMAL POWER

ACTIONS (continued)

CONDITION	REQUIRED ACTION	COMPLETION TIME
C. Required Action and associated Completion Time not met.	C.1 Be in MODE 3. AND C.2 Be in MODE 5.	6 hours 36 hours

SURVEILLANCE REQUIREMENTS

SURVEILLANCE		FREQUENCY
SR 3.7.12.1	Operate each ABSVS train for ≥ 15 minutes with the heaters operating.	31 days
SR 3.7.12.2	Perform required ABSVS filter testing in accordance with the Ventilation Filter Testing Program (VFTP).	In accordance with the VFTP
SR 3.7.12.3	Verify each ABSVS train can produce a negative pressure within ~~6~~20 minutes after initiation.	92 days
SR 3.7.12.4	Verify each ABSVS train actuates on an actual or simulated actuation signal.	24 months

3.7 PLANT SYSTEMS

3.7.13 Not Used~~Spent Fuel Pool Special Ventilation System (SFPSVS)~~

~~LCO 3.7.13 Two SFPSVS trains shall be OPERABLE.~~

~~APPLICABILITY: During movement of irradiated fuel assemblies in the spent fuel pool enclosure.~~

~~ACTIONS~~

~~NOTE~~
~~LCO 3.0.3 is not applicable.~~

~~CONDITION~~	~~REQUIRED ACTION~~	~~COMPLETION TIME~~
~~A. One SFPSVS train inoperable.~~	~~A.1 Restore SFPSVS train to OPERABLE status.~~	~~7 days~~
~~B. Required Action and associated Completion Time of Condition A not met.~~	~~B.1 Place OPERABLE SFPSVS train in operation.~~ ~~OR~~ ~~B.2 Suspend movement of irradiated fuel assemblies in the spent fuel pool enclosure.~~	~~Immediately~~ ~~Immediately~~

~~ACTIONS (continued)~~

~~CONDITION~~	~~REQUIRED ACTION~~	~~COMPLETION TIME~~
~~C. Both SFPSVS trains inoperable.~~	~~C.1 Suspend movement of irradiated fuel assemblies in the spent fuel pool enclosure.~~	~~Immediately~~

~~SURVEILLANCE REQUIREMENTS~~

~~SURVEILLANCE~~	~~FREQUENCY~~
~~SR 3.7.13.1 Operate each SFPSVS train for ≥ 15 minutes with the heaters operating.~~	~~31 days~~
~~SR 3.7.13.2 Perform required SFPSVS filter testing in accordance with the Ventilation Filter Testing Program (VFTP).~~	~~In accordance with the VFTP~~
~~SR 3.7.13.3 Verify each SFPSVS train actuates on an actual or simulated actuation signal.~~	~~24 months~~
~~SR 3.7.13.4 Verify the SFPSVS fan in each train delivers 4680 to 5720 cfm.~~	~~24 months on a STAGGERED TEST BASIS~~

3.9 REFUELING OPERATIONS

3.9.4 Decay Time~~Containment Penetrations~~

LCO 3.9.4 The reactor shall be subcritical for at least 50 hours.~~containment penetrations shall be in the following status:~~

~~a. The equipment hatch closed and held in place by four bolts;~~

~~b. One door in each air lock closed, and~~

~~c. Each penetration providing direct access from the containment atmosphere to the outside atmosphere closed by a manual or automatic isolation valve, blind flange, or equivalent.~~

~~NOTE~~
~~Penetration flow path(s) providing access from the containment atmosphere to the outside atmosphere may be unisolated under administrative controls.~~

APPLICABILITY: During movement of ~~recently~~ irradiated fuel assemblies within the reactor core~~containment~~.

ACTIONS

CONDITION	REQUIRED ACTION	COMPLETION TIME
A. Reactor subcritical for less than 50 hours~~One or more containment penetrations not in required status~~.	A.1 Suspend movement of ~~recently~~ irradiated fuel assemblies within the reactor core~~containment~~.	Immediately

SURVEILLANCE REQUIREMENTS

SURVEILLANCE		FREQUENCY
SR 3.9.4.1	Verify the reactor has been subcritical for at least 50 hours~~each required containment penetration is in the required status~~.	Once prior to movement of irradiated fuel in the reactor core following reactor shutdown~~7 days~~

ATTACHMENT 2 to ENCLOSURE

Bases Pages (Markup)

(For Information Only)

TS BASES CHANGES	TS BASES CHANGES	TS BASES CHANGES
B 3.3.2-1	B 3.4.19-3	B 3.7.13-4
B 3.3.2-13	B 3.4.19-4	B 3.7.13-5
B 3.3.6-3	B 3.4.19-10	B 3.7.13-6
B 3.3.7-1	B 3.6.1-3	B 3.7.14-1
B 3.3.7-2	B 3.6.2-2	B 3.7.14-2
B 3.3.7-3	B 3.6.3-5	B 3.7.14-4
B 3.3.7-4	B 3.6.5-6	B 3.7.15-1
B 3.3.7-5	B 3.6.9-1	B 3.7.15-3
B 3.4.14-2	B 3.6.9-2	B 3.9.4-1
B 3.4.14-3	B 3.6.9-3	B 3.9.4-2
B 3.4.17-1	B 3.6.9-5	B 3.9.4-3
B 3.4.17-2	B 3.7.10-2	B 3.9.4-4
B 3.4.17-3	B 3.7.12-2	B 3.9.4-5
B 3.4.17-4	B 3.7.12-3	B 3.9.4-6
B 3.4.17-5	B 3.7.12-6	B 3.9.4-7
B 3.4.17-6	B 3.7.12-7	B 3.9.4-8
B 3.4.17-7	B 3.7.13-1	B 3.9.4-9
B 3.4.17-8	B 3.7.13-2	
B 3.4.19-2	B 3.7.13-3	

55 Pages Follow

B 3.3 INSTRUMENTATION

B 3.3.2 Engineered Safety Feature Actuation System (ESFAS) Instrumentation

BASES

BACKGROUND

AEC GDC Criterion 15, "Engineered Safety Features Protection Systems" (Ref. 1), requires that protection systems shall be provided for sensing accident situations and initiating the operation of necessary engineered safety features to mitigate accidents.

Accidents are events that are analyzed even though they are not expected to occur during the unit life. One acceptable limit during accidents is that offsite dose shall be maintained within an acceptable fraction of 10 CFR ~~100~~50.67 limits. Different accident categories are allowed a different fraction of these limits, based on probability of occurrence. Meeting the acceptable dose limit for an accident category is considered having acceptable consequences for that event.

The ESFAS instrumentation is segmented into interconnected portions as described in the USAR (Ref. 2), and as identified below:

1. Field transmitters or process sensors and instrumentation: provide a measurable electronic signal based on the physical characteristics of the parameter being measured;

2. Signal processing equipment including Reactor Protection Analog System, arranged in protection channel sets: provide signal conditioning, bistable setpoint comparison, bistable electrical signal output to engineered safety features (ESF) relay logic, and control board/control room/miscellaneous indications; and

3. ESF relay logic system including channelized input and logic: initiates the proper ESF actuation in accordance with the defined logic and based on the bistable outputs from the analog protection system.

BASES

APPLICABLE SAFETY ANALYSES, LCO, and APPLICABILITY

e. Safety Injection-Steam Line Low Pressure (continued)

Steam Line Low Pressure must be OPERABLE in MODES 1, 2, and 3 with pressurizer pressure ≥ 2000 psig, when a secondary side break or stuck open safety valve could result in the rapid depressurization of the steam lines. This signal may be manually blocked by the operator when pressurizer pressure is < 2000 psig. When pressurizer pressure is < 2000 psig, feed line break is not a concern. This Function is not required to be OPERABLE in MODE 4, 5, or 6 because there is insufficient energy in the secondary side of the unit to cause an accident.

2. Containment Spray

Containment Spray (CS) provides three primary functions:

1. Lowers containment pressure and temperature after a LOCA or SLB in containment;

2. Reduces the amount of radioactive iodine in the containment atmosphere (although, this is not credited in the radiological consequence analysis); and

3. Adjusts the pH of the water in the containment sump after a large break LOCA.

These functions are necessary to:

- Ensure the pressure boundary integrity of the containment structure;

- Limit the release of radioactive iodine to the environment in the event of a failure of the containment structure; and

BASES

LCO

2. Control Room Radiation (continued)

A high radiation signal from one control room radiation monitor channel (R23 or R24) initiates the following:

a. The Cleanup Fan on the associated train starts;

b. Exhaust Dampers on the associated train are isolated; and

c. Outside Air Dampers for both trains are isolated.

Table 3.3.6-1 specifies the allowable value for the Control Room Atmosphere Radiation Monitors as five times background. ~~which is approximately 10 times less than the Derived Air Concentration for Xe-133 from Appendix B of 10CFR20~~. No Analytical Limit is assumed in the accident analysis for this function. This allowable value was developed outside the PI setpoint methodology.

3. Safety Injection

Refer to LCO 3.3.2, Function 1, for all initiating Functions and requirements.

APPLICABILITY

CRSVS Function 1 in Table 3.3.6-1 must be OPERABLE in MODES 1, 2, 3, 4, and during movement of irradiated fuel assemblies.

The Applicability for CRSVS actuation on ESFAS Safety Injection Functions are specified in LCO 3.3.2. Refer to the Bases for LCO 3.3.2 for discussion of the Safety Injection Function Applicability.

ACTIONS

A Note has been added to the ACTIONS indicating that separate Condition entry is allowed for each Function. The Conditions of this

~~B 3.3 INSTRUMENTATION~~

~~B 3.3.7 Spent Fuel Pool Special Ventilation System (SFPSVS) Actuation Instrumentation~~

~~BASES~~

~~BACKGROUND~~ ~~The SFPSVS ensures that radioactive materials in the fuel pool enclosure atmosphere following a fuel handling accident are filtered and adsorbed prior to exhausting to the environment. The system is described in the Bases for LCO 3.7.13, "Spent Fuel Pool Special Ventilation System (SFPSVS)." The system initiates filtered ventilation of the fuel pool enclosure automatically following receipt of a high radiation signal.~~

~~High radiation, monitored by either of two monitors (R-25 and R-31), provides SFPSVS initiation. Each SFPSVS train is initiated by high radiation detected by a channel dedicated to that train. There are a total of two channels, one for each train. High radiation detected by either monitor initiates fuel pool enclosure isolation and starts the SFPSVS. These actions function to prevent exfiltration of contaminated air by initiating filtered ventilation, which imposes a negative pressure on the fuel pool enclosure.~~

~~APPLICABLE SAFETY ANALYSES~~ ~~The SFPSVS ensures that radioactive materials in the fuel pool enclosure atmosphere following a fuel handling accident are filtered and adsorbed prior to being exhausted to the environment. This action reduces the radioactive content in the fuel pool enclosure exhaust following a fuel handling accident so that offsite doses remain within the limits specified in 10 CFR 100 (Ref. 1).~~

~~The SFPSVS actuation instrumentation satisfies Criterion 3 of 10CFR50.36(c)(2)(ii).~~

~~BASES (continued)~~

~~LCO~~ ~~The LCO requirements ensure that instrumentation necessary to initiate the SFPSVS is OPERABLE.~~

~~1. Fuel Pool Enclosure Radiation~~

~~The LCO specifies two required Radiation Monitor channels (R-25 and R-31) to ensure that the radiation monitoring instrumentation necessary to initiate the SFPSVS remains OPERABLE.~~

~~The allowable value for these radiation monitors is provided by the Prairie Island Offsite Dose Calculation Manual (ODCM).~~

~~APPLICABILITY~~ ~~High radiation initiation of the SFPSVS must be OPERABLE when moving irradiated fuel assemblies in the fuel pool enclosure, to ensure automatic initiation of the SFPSVS to remove fission products associated with a fuel handling accident.~~

~~BASES (continued)~~

~~ACTIONS~~ ~~LCO 3.0.3 is not applicable while in MODE 5 or 6. However, since irradiated fuel assembly movement can occur in MODE 1, 2, 3, or 4, the ACTIONS have been modified by a Note stating that LCO 3.0.3 is not applicable. If moving irradiated fuel assemblies while in MODE 5 or 6, LCO 3.0.3 would not specify any action. If moving irradiated fuel assemblies while in MODE 1, 2, 3, or 4, the fuel movement is independent of reactor operations. Entering LCO 3.0.3, while in MODE 1, 2, 3, or 4, would require the unit to be shutdown unnecessarily.~~

~~A.1~~

~~Condition A applies to the failure of a single radiation monitor channel. If one channel is inoperable, a period of 7 days is allowed to place one train of SFPSVS in operation. This accomplishes the actuation instrumentation function and places the unit in a conservative mode of operation. The 7 day Completion Time is the same as is allowed if one train of the mechanical portion of the system is inoperable. The basis for this time is the same as that provided in LCO 3.7.13. Since the SFPSVS does not have a manual switch, the system may be initiated by injecting a simulated high radiation signal into the radiation monitor circuitry using a rack installed test device.~~

~~B.1.1, B.1.2, and B.2~~

~~Condition B applies to the failure of two SFPSVS radiation monitors. The Required Action is to place one SFPSVS train in operation immediately. This accomplishes the actuation instrumentation function that may have been lost and places the unit in a conservative mode of operation. The applicable Conditions and Required Actions of LCO 3.7.13 must also be entered for the SFPSVS train made inoperable by the inoperable actuation instrumentation. This ensures appropriate limits are placed on train inoperability as discussed in the Bases for LCO 3.7.13.~~

~~BASES~~

~~ACTIONS~~ ~~B.1.1, B.1.2, and B.2 (continued)~~

~~Alternatively, both trains may be placed in operation. This ensures the SFPSVS Function is performed even in the presence of a single failure.~~

~~C.1~~

~~Condition C applies when the Required Action and associated Completion Time for Condition A or B have not been met and irradiated fuel assemblies are being moved in the fuel pool enclosure. Movement of irradiated fuel assemblies in the fuel pool enclosure must be suspended immediately to eliminate the potential for events that could require SFPSVS actuation.~~

~~SURVEILLANCE REQUIREMENTS~~ ~~SR 3.3.7.1~~

~~Performance of the CHANNEL CHECK once every 12 hours ensures that a gross failure of instrumentation has not occurred. A CHANNEL CHECK is normally a comparison of the parameter indicated on one channel to a similar parameter on other channels. It is based on the assumption that instrument channels monitoring the same parameter should read approximately the same value. Significant deviations between the two instrument channels could be an indication of excessive instrument drift in one of the channels or of something even more serious. A CHANNEL CHECK will detect gross channel failure; thus, it is key to verifying the instrumentation continues to operate properly between each CHANNEL CALIBRATION.~~

~~The Frequency is based on operating experience that demonstrates channel failure is rare.~~

~~BASES~~

~~SURVEILLANCE REQUIREMENTS (continued)~~

~~SR 3.3.7.2~~

~~A COT is performed once every 92 days on each required channel to ensure the entire channel, including the actuation devices, will perform the intended function. This test verifies the capability of the instrumentation to provide the SFPSVS actuation. The setpoints shall be left consistent with the unit specific calibration procedure tolerance. The Frequency of 92 days is based on the known reliability of the monitoring equipment and has been shown to be acceptable through operating experience.~~

~~SR 3.3.7.3~~

~~A CHANNEL CALIBRATION is performed every 24 months, or approximately at every refueling. CHANNEL CALIBRATION is a complete check of the instrument loop, including the sensor. The test verifies that the channel responds to a measured parameter within the necessary range and accuracy. The Frequency is consistent with the typical industry refueling cycle.~~

~~REFERENCES~~

~~1. 10 CFR 100.11.~~

BASES (continued)

APPLICABLE SAFETY ANALYSES

The safety analyses, which presume the occurrence of an RCS iodine spike concurrent with an accident, address operational LEAKAGE. The total operational LEAKAGE is used to determine the iodine appearance rate. In addition, other operational LEAKAGE is related to the safety analyses for LOCA; the amount of leakage can affect the probability of such an event. The safety analysis for an event resulting in steam discharge to the atmosphere assumes the total primary to secondary LEAKAGE is 1 gallon per minute from the faulted SG or is assumed to increase to 1 gallon per minute as a result of accident induced conditions plus 150 gallons per day from the intact SG. The LCO requirement to limit primary to secondary LEAKAGE through any one SG to less than or equal to 150 gallons per day is significantly less than the conditions assumed in the safety analysis. When the alternate repair criteria discussed in Specification 5.5.8.c.2(c) are implemented for Unit 2 (only), the safety analysis assumes the leakage from the faulted SG is limited to 1.42 gallons per minute (based on a reactor coolant system temperature of 578 °F).

Primary to secondary LEAKAGE is a factor in the dose releases outside containment resulting from a steam line break (SLB) accident, and ~~. To a lesser extent,~~ other accidents or transients that involve secondary steam release to the atmosphere, such as a steam generator tube rupture (SGTR). The leakage contaminates the secondary fluid.

The USAR (Ref. 2) analysis for SGTR assumes the plant has been operating with a ~~5 gpm~~ primary to secondary leak rate for a period of time sufficient to establish radionuclide equilibrium in the secondary loop at the applicable limits. ~~Following the tube rupture, the initial primary to secondary LEAKAGE safety analysis assumption is relatively inconsequential when compared to the mass transfer through the ruptured tube.~~

~~The SLB is more limiting for site radiation releases.~~ The safety analysis for the SLB accident assumes the total primary to secondary LEAKAGE is 1 gallon per minute from the faulted SG or is assumed

BASES

APPLICABLE SAFETY ANALYSES (continued)

to increase to 1 gallon per minute as a result of accident induced conditions plus 150 gallons per day from the intact SG. The safety analysis for other secondary side accidents assume a steady state leakage of 150 gpd to the intact Steam Generator(s).

When the alternate repair criteria discussed in Specification 5.5.8.c.2(c) are implemented for Unit 2 (only), the safety analysis assumes the leakage from the faulted SG for this repair method will be limited to 1.42 gallons per minute (based on a reactor coolant system temperature of 578 °F). The dose consequences resulting from the ~~SLB~~secondary side accidents are well within the limits defined in 10 CFR 50.67~~100~~ or the staff approved licensing basis (i.e., a small fraction of these limits).

The RCS operational LEAKAGE satisfies Criterion 2 of 10 CFR 50.36(c)(2)(ii).

LCO

RCS operational LEAKAGE shall be limited to:

a. Pressure Boundary LEAKAGE

No pressure boundary LEAKAGE is allowed, being indicative of material deterioration. LEAKAGE of this type is unacceptable as the leak itself could cause further deterioration, resulting in higher LEAKAGE. Violation of this LCO could result in continued degradation of the reactor coolant pressure boundary (RCPB). LEAKAGE past seals and gaskets is not pressure boundary LEAKAGE.

Seal welds are provided at the threaded joints of all reactor vessel head penetrations (spare penetrations, full-length Control Rod Drive Mechanisms, and thermocouple columns). Although these seals are part of the RCPB as defined in 10CFR50 Section 50.2, minor leakage past the seal weld is not a fault in the RCPB or a structural integrity concern. Pressure retaining components are differentiated from leakage barriers in the ASME Boiler and Pressure Vessel Code. In all cases, the joint strength is provided by the threads of the closure joint.

B 3.4 REACTOR COOLANT SYSTEM (RCS)

B 3.4.17 RCS Specific Activity

BASES

BACKGROUND

The maximum dose ~~to the whole body and the thyroid~~ that an individual at the exclusion area ~~site~~ boundary can receive for 2 hours ~~during~~ following an accident, or at the low population zone outer boundary for the radiological release duration, is specified in 10 CFR ~~100~~50.67 (Ref. 1). The limits on specific activity ensure that the offsite and control room doses are appropriately limited ~~held to a small fraction of the 10 CFR 100 limits~~ during analyzed transients and accidents.

The RCS specific activity LCO limits the allowable concentration level of radionuclides in the reactor coolant. The LCO limits are established to minimize the dose consequences~~offsite radioactivity dose consequences~~ in the event of a steam generator tube rupture (SGTR) accident. The DOSE EQUIVALENT I-131 limit has been established to ensure that the control room dose acceptance criteria are met following a main steam line break (MSLB) when applying the alternative voltage repair criteria.

The LCO contains specific activity limits for both DOSE EQUIVALENT I-131 and ~~gross specific activity~~ DOSE EQUIVALENT XE-133. The allowable levels are intended to ensure that offsite and control room doses meet the appropriate acceptance criteria in the Standard Review Plan (Ref. 2)~~limit the 2 hour dose at the site boundary to a small fraction of the 10 CFR 100 dose guideline limits. Except for the DOSE EQUIVALENT I-131 limit, the limits in the LCO are standardized, based on parametric evaluations of offsite radioactivity dose consequences for typical site locations.~~ The LCO limit for DOSE EQUIVALENT I-131 was derived from the control room dose consequence analysis following a MSLB assuming alternate repair criteria.

~~The parametric evaluations showed the potential offsite dose levels for a SGTR accident were an appropriately small fraction of the~~

BASES

BACKGROUND (continued)

~~10 CFR 100 dose guideline limits. Each evaluation assumes a broad range of site applicable atmospheric dispersion factors in a parametric evaluation. The basis for the DOSE EQUIVALENT I-131 limit is derived from Prairie Island Nuclear Generating Plant (PINGP) specific atmospheric dispersion factors in the dose consequence analysis.~~

APPLICABLE SAFETY ANALYSES

The LCO limits on the specific activity of the reactor coolant ensure~~s~~ that the resulting offsite and control room doses meet the appropriate Standard Review Plan (SRP) acceptance criteria ~~2 hour doses at the site boundary will not exceed a small fraction of the 10 CFR 100 dose guideline limits~~ following a MSLB or SGTR accident. ~~with an existing reactor coolant steam generator (SG) tube leakage rate of 1 gpm. Except for the DOSE EQUIVALENT I-131 limit, the values for the limits on specific activity represent limits based upon a parametric evaluation by the NRC of typical site locations. These values are conservative in that specific site parameters of the Prairie Island site, such as site boundary location and meteorological conditions, were not considered in this evaluation (Ref. 2). The DOSE EQUIVALENT I-131 limit is based on a site specific dose consequence analysis and ensures that the offsite, as well as the control room, dose limits are met.~~ The safety analyses assume the specific activity of the secondary coolant is at its limit of 0.1 µCi/gm DOSE EQUIVALENT I-131 from LCO 3.7..14, "Secondary Specific Activity."

The analyses for the MSLB and SGTR accidents establish the acceptance limits for RCS specific activity. Reference to these analyses is used to assess changes to the unit that could affect RCS specific activity, as they relate to acceptance limits.

The safety analyses consider two cases of reactor coolant iodine specific activity. One case assumes specific activity at 0.5 µCi/gm DOSE EQUIVALENT I-131 with a concurrent large iodine spike that increases the rate of release of iodine from the fuel rods containing cladding defects to the reactor coolant immediately after

BASES

APPLICABLE SAFETY ANALYSES (continued)

a MSLB (by a factor of 500), or SGTR (by a factor of 335), respectively. The second case assumes the initial reactor coolant iodine activity at 30.0 μCi/gm DOSE EQUIVALENT I-131 due to an iodine spike caused by a reactor of an RCS transient prior to the accident. In both cases, the noble gas specific activity is assumed to be 580 μCi/gm DOSE EQUIVALENT XE-133.

The SGTR analysis also assumes a loss of offsite power at the same time as the reactor trip. The SGTR causes a reduction in reactor coolant inventory. The reduction initiates a reactor trip from a low pressurizer pressure signal.

The loss of offsite power causes the steam dump valves to close to protect the condenser. The rise in pressure in the ruptured steam generator (SG) discharges radioactively contaminated steam to the atmosphere through the SG power operated relief valves. The unaffected SGs remove core decay heat by venting steam to the atmosphere until the cooldown ends and the Residual Heat Removal (RHR) system is placed in service.

The SLB radiological analysis assumes that offsite power is lost at the same time as the pipe break occurs outside containment. Reactor trip occurs after the generation of an SI signal on low steam line pressure. The affected SG blows down completely and steam is vented directly to the atmosphere. The unaffected SGs remove core decay heat by venting steam to the atmosphere until the cooldown ends and the RHR system is placed in service.

Operation with iodine specific activity levels greater than the LCO limit is permissible, if the activity levels do not exceed 30.0 μCi/gm for more than 48 hours.

The limits on RCS specific activity are also used for establishing standardization in radiation shielding and plant personnel radiation protection practices.

RCS specific activity satisfies Criterion 2 of 10 CFR 50.36(c)(2)(ii).

BASES (continued)

LCO

The specific iodine activity is limited to 0.5 μCi/gm DOSE EQUIVALENT I-131, and the noble gas specific activity~~gross specific activity~~ in the reactor coolant is limited to 580 μCi/gm~~the~~ DOSE EQUIVALENT XE-133. ~~number of μCi/gm equal to 100 divided by $\bar{E}$ (average disintegration energy of the sum of the average beta and gamma energies of the coolant nuclides). The limit on DOSE EQUIVALENT I-131 ensures that the thyroid dose to personnel in the control room during the Design Basis Accident (DBA) will be within the allowed limit. The limit on gross specific activity ensures the 2 hour whole body dose to an individual at the site boundary during the DBA will be a small fraction of the allowed whole body dose.~~The limits on specific activity ensure that offsite and control room doses will meet appropriate SRP acceptance criteria (Ref. 2).

The SGTR and MSLB accident analysis (Ref. 3) shows~~s~~ that the ~~2 hour site boundary~~calculated doses ~~levels~~ are within acceptable limits. ~~The MSLB accident analysis (Ref. 3) shows that the control room dose levels are within acceptable limits assuming the limiting primary to secondary leakage.~~ Violation of the LCO may result in reactor coolant radioactivity levels that could, in the event of an SGTR, lead to site boundary doses that exceed the SRP acceptance criteria~~10 CFR 100 dose guideline limits~~ (Ref. 2).

APPLICABILITY

In MODES 1, ~~and~~ 2, 3, and ~~in MODE 3~~4 ~~with RCS average temperature ≥ 500°F~~, operation within the LCO limits for DOSE EQUIVALENT I-131 and DOSE EQUIVALENT XE-133~~gross specific activity are~~is necessary to limit ~~contain~~ the potential consequences of a~~n~~ SGTR or MSLB ~~to within the acceptable site boundary dose values and MSLB~~ to within the SRP acceptance ~~ble~~ criteria~~ontrol room dose limits~~ (Ref. 2).

~~For operation in MODE 3 with RCS average temperature < 500°F, and in MODES 4 and 5, the release of radioactivity in the event of a SGTR is unlikely since the saturation pressure of the reactor coolant is below the lift pressure settings of the main steam safety valves.~~In MODES 5 and 6, the steam generators are not being used for decay

BASES

APPLICABILITY (continued)

heat removal, the RCS and steam generators are depressurized, and primary to secondary leakage is minimal. Therefore, monitoring of RCS specific activity is not required.

ACTIONS

A.1 and A.2

With the DOSE EQUIVALENT I-131 greater than the LCO limit, samples at intervals of 4 hours must be taken to demonstrate that the specific activity is ≤ 30 μCi/gm~~limits of Figure 3.4.17-1 are not exceeded~~. The Completion Time of 4 hours is required to obtain and analyze a sample. Sampling is done to continue to provide a trend.

The DOSE EQUIVALENT I-131 must be restored to within limits within 48 hours. The Completion Time of 48 hours is required, if the limit violation resulted from normal iodine spiking.

~~Permitting POWER OPERATION to continue for limited time periods with the primary coolant's specific activity greater than 0.5 μCi/gm DOSE EQUIVALENT I-131, but within the allowable limit shown on Figure 3.4.17-1, accommodates the possible iodine spiking phenomenon which may occur following changes in THERMAL POWER. Operation with specific activity levels exceeding 0.5 μCi/gm DOSE EQUIVALENT I-131 but within the limits shown on Figure 3.4.17-1 should be minimized since the activity levels allowed by the figure increase the dose at the site boundary following a postulated steam generator tube rupture.~~

A Note permits the use of the provisions of LCO 3.0.4.c. This allowance permits entry into the applicable MODE(S), ~~while~~ relying on ~~the~~Required Actions~~CTIONS~~ A.1 and A.2 while the DOSE EQUIVALENT I-131 LCO limit is not met. This allowance is acceptable due to the significant conservatism incorporated into the specific activity limit, the low probability of an event which is limiting due to exceeding this limit, and the ability to restore transient specific activity excursions while the plant remains at, or proceeds to power operation.

BASES

ACTIONS (continued)

B.1

With the DOSE EQUIVALENT XE-133 greater than the LCO limit, DOSE EQUIVALENT XE-133 must be restored to within limit within 48 hours. ~~gross specific activity in excess of the allowed limit, the reactor must be placed in a MODE in which the requirement does not apply. The change within 6 hours to MODE 3 and RCS average temperature < 500°F lowers the saturation pressure of the reactor coolant below the setpoints of the main steam safety valves and prevents venting the SG to the environment in a SGTR event.~~ The allowed Completion Time of ~~6~~48 hours is acceptable since it is expected that, if there were a noble gas spike, the normal coolant noble gas concentration would be restored within this time period. ~~reasonable, based on operating experience, to reach MODE 3 below 500°F from full power conditions in an orderly manner without challenging plant systems.~~

A Note permits the use of the provisions of LCO 3.0.4.c. This allowance permits entry into the applicable MODE(S), relying on Required Action B.1 while the DOSE EQUIVALENT XE-133 LCO limit is not met. This allowance is acceptable due to the significant conservatism incorporated into the specific activity limit, the low probability of an event which is limiting due to exceeding this limit, and the ability to restore transient specific activity excursions while the plant remains at, or proceeds to power operation.

C.1 and C.2

If a Required Action and the associated Completion Time of Condition A or B is not met, or if the DOSE EQUIVALENT I-131 ≥ 30 μCi/gm, ~~is in the unacceptable region of Figure 3.4.17-1,~~ the reactor must be brought to MODE 3 with ~~RCS average temperature < 500°F with~~in 6 hours and MODE 5 within 36 hours. The allowed Completion Times are ~~of 6 hours is~~ reasonable, based on operating experience, to reach the required plant conditions~~MODE 3 below 500°F~~ from full power conditions in an orderly manner without challenging plant systems.

BASES (continued)

SURVEILLANCE REQUIREMENTS

SR 3.4.17.1

SR 3.4.17.1 requires performing a gamma isotopic analysis as a measure of the noble gas ~~gross~~ specific activity of the reactor coolant at least once every 7 days. ~~While basically a quantitative measure of radionuclides with half lives longer than 15 minutes, excluding iodines, t~~This measurement is the sum of the degassed gamma activities and the gaseous gamma activities in the sample taken. This Surveillance provides an indication of any increase in the noble gas ~~gross~~ specific activity.

Trending the results of this Surveillance allows proper remedial action to be taken before reaching the LCO limit under normal operating conditions. ~~The Surveillance is applicable in MODES 1 and 2, and in MODE 3 with T_{avg} at least 500°F.~~ The 7 day Frequency considers the unlikelihood of a gross fuel failure during the time.

Due to the inherent difficulty in detecting Kr-85 in a reactor coolant sample due to masking from radioisotopes with similar decay energies, such as F-18 and I-134, it is acceptable to include the minimum detectable activity for Kr-85 in the SR 3.4.17.1 calculation. If a specific noble gas nuclide listed in the definition of DOSE EQUIVALENT XE-133 is not detected, it should be assumed to be present at the minimum detectable activity.

A Note modifies the SR to allow entry into and operation in MODE 4, MODE 3, and MODE 2 prior to performing the SR. This allows the Surveillance to be performed in those MODES, prior to entering MODE 1.

SR 3.4.17.2

This Surveillance is performed in MODE 1 only to ensure iodine remains within limit during normal operation and following fast power changes when fuel failure is more apt to occur. The 14 day Frequency is adequate to trend changes in the iodine activity level,

BASES

SURVEILLANCE REQUIREMENTS

SR 3.4.17.2 (continued)

considering gross activity is monitored every 7 days. The Frequency, between 2 and 6 hours after a power change ≥ 15% RTP within a 1 hour period, is established because the iodine levels peak during this time following fuel failure; samples at other times would provide inaccurate results.

~~SR 3.4.17.3~~

~~A radiochemical analysis for $\bar{E}$ determination is required every 184 days (6 months) with the plant operating in MODE 1 equilibrium conditions. The $\bar{E}$ determination directly relates to the LCO and is required to verify plant operation within the specified gross activity LCO limit. The analysis for $\bar{E}$ is a measurement of the average energies per disintegration for isotopes with half lives longer than 15 minutes, excluding iodines. The Frequency of 184 days recognizes $\bar{E}$ does not change rapidly.~~

~~This SR has been modified by a Note that indicates sampling is required to be performed within 31 days after a minimum of 2 effective full power days and 20 days of MODE 1 operation have elapsed since the reactor was last subcritical for at least 48 hours. This ensures that the radioactive materials are at equilibrium so the analysis for $\bar{E}$ is representative and not skewed by a crud burst or other similar abnormal event.~~

REFERENCES

1. 10 CFR 50.67~~100.11, 1973.~~.

2. ~~Letter from Dominic C. DiIanni, NRC, to L. O. Mayer, NSP, dated December 4, 1981.~~ SRP Section 15.0.1, "Radiological Consequence Analyses Using Alternative Source Terms".

3. USAR, Section 14.5.

BASES

BACKGROUND (continued)

There are three SG performance criteria: structural integrity, accident induced leakage, and operational LEAKAGE. The SG performance criteria are described in Specification 5.5.8. Meeting the SG performance criteria provides reasonable assurance of maintaining tube integrity at normal and accident conditions.

The processes used to meet the SG performance criteria are defined by the Steam Generator Program Guidelines (Ref. 1).

APPLICABLE SAFETY ANALYSES

The steam generator tube rupture (SGTR) accident is the limiting design basis event for SG tubes and avoiding an SGTR is the basis for this Specification. The analysis of a SGTR event assumes a bounding primary to secondary LEAKAGE rate at ~~greater than~~ the operational LEAKAGE rate limits in LCO 3.4.14, "RCS Operational LEAKAGE," plus the leakage rate associated with a double-ended rupture of a single tube. The accident analysis for a SGTR assumes the contaminated secondary fluid is released to the atmosphere via ~~atmospheric steam dumps~~the associated steam generator PORV.

The analyses for design basis accidents and transients other than a SGTR assume the SG tubes retain their structural integrity (i.e., they are assumed not to rupture). In these analyses, the steam discharge to the atmosphere is based on the total primary to secondary LEAKAGE of 1 gallon per minute from the faulted SG or is assumed to increase to 1 gallon per minute as a result of accident induced conditions plus 150 gallons per day from the intact SG. When the alternate repair criteria discussed in Specification 5.5.8.c.2(c) are implemented for Unit 2 (only), the safety analyses assume the leakage from the faulted SG is limited to 1.42 gallons per minute (based on a reactor coolant system temperature of 578 °F). When alternate repair criteria discussed in Specification 5.5.8.c.2(c) are applied to axially oriented outside diameter stress corrosion cracking indications, the probability that one or more of these indications in an SG will burst under postulated main steam line break conditions shall be less than 1E-02.

BASES

APPLICABLE SAFETY ANALYSES (continued)

For accidents that do not involve fuel damage, the primary coolant activity level of DOSE EQUIVALENT I-131 is assumed to be equal to or greater than the LCO 3.4.17, "RCS Specific Activity," limits. For accidents that assume fuel damage, the primary coolant activity is a function of the amount of activity released from the damaged fuel. The dose consequences of these events are within the limits of GDC 19 (Ref. 2), 10 CFR ~~100~~ 50.67 (Ref. 3) or the NRC approved licensing basis (e.g., a small fraction of these limits).

Steam generator tube integrity satisfies Criterion 2 of 10 CFR 50.36(c)(2)(ii).

LCO

The LCO requires that SG tube integrity be maintained. The LCO also requires that all SG tubes that satisfy the repair criteria be plugged or repaired in accordance with the Steam Generator Program.

During an SG inspection, any inspected tube that satisfies the Steam Generator Program repair criteria is repaired or removed from service by plugging. If a tube was determined to satisfy the repair criteria but was not plugged or repaired, the tube may still have tube integrity.

In the context of this Specification, an SG tube is defined as the entire length of the tube, including the tube wall and any repairs made to it, between the tube-to-tubesheet weld at the tube inlet and the tube-to-tubesheet weld at the tube outlet. The tube-to-tubesheet weld is not considered part of the tube, nor is the region of tube below the F* and EF* region (except as noted below), nor the portion of the tube between sleeve joints. When an F* or EF* region is repaired by sleeving, the entire sleeve is considered part of the tube.

BASES

LCO (continued)

An SG tube has tube integrity when it satisfies the SG performance criteria. The SG performance criteria are defined in Specification 5.5.8, "Steam Generator Program," and describe acceptable SG tube performance. The Steam Generator Program also provides the evaluation process for determining conformance with the SG performance criteria.

There are three SG performance criteria: structural integrity, accident induced leakage, and operational LEAKAGE. Failure to meet any one of these criteria is considered failure to meet the LCO.

The structural integrity performance criterion provides a margin of safety against tube burst or collapse under normal and accident conditions, and ensures structural integrity of the SG tubes under all anticipated transients included in the design specification. Tube burst is defined as, "The gross structural failure of the tube wall. The condition typically corresponds to an unstable opening displacement (e.g., opening area increased in response to constant pressure) accompanied by ductile (plastic) tearing of the tube material at the ends of the degradation."

Tube collapse is defined as, "For the load displacement curve for a given structure, collapse occurs at the top of the load versus displacement curve where the slope of the curve becomes zero." The structural integrity performance criterion provides guidance on assessing loads that have a significant effect on burst or collapse. In that context, the term "significant" is defined as "An accident loading condition other than differential pressure is considered significant when the addition of such loads in the assessment of the structural integrity performance criterion could cause a lower structural limit or limiting burst/collapse condition to be established." For tube integrity evaluations, except for circumferential degradation, axial thermal loads are classified as secondary loads. For circumferential degradation, the classification of axial thermal loads as primary or secondary loads will be

BASES (continued)

REFERENCES

1. NEI 97-06, "Steam Generator Program Guidelines."

2. 10 CFR 50 Appendix A, GDC 19.

3. 10 CFR ~~100~~50.67.

4. ASME Boiler and Pressure Vessel Code, Section III, Subsection NB.

5. Draft Regulatory Guide 1.121, "Basis for Plugging Degraded Steam Generator Tubes," August 1976.

6. EPRI, "Pressurized Water Reactor Steam Generator Examination Guidelines."

BASES

APPLICABLE SAFETY ANALYSES (continued)

LOCA dose analysis was 2.5 weight percent per day. In the SER, the AEC concluded that a maximum containment leakage of 0.5 weight percent per day was acceptable. This formed the basis for the original plant Technical Specification leakage limit of 0.5 weight percent per day. Subsequently, it was concluded that the Shield Building leakage was higher than anticipated which increased the calculated dose. With the higher Shield Building leakage, in order to reduce the calculated dose, the maximum allowable containment leakage was reduced to 0.25 weight percent per day. Subsequently, as part of the Alternative Source Term Dose Analysis for the loss of coolant accident, the maximum allowable containment leakage was further reduced to 0.15 weight percent per day (Ref. 2). This leakage rate, used in the evaluation of offsite doses resulting from accidents, is defined for Prairie Island in the Containment Leakage Rate Testing Program as L_a: the maximum allowable containment leakage rate at the containment design maximum internal pressure (P_a). The allowable leakage rate represented by L_a forms the basis for the acceptance criteria imposed on all containment leakage rate testing. L_a is assumed to be 0.1~~2~~5% per day in the safety analysis at P_a = 46.0 psig (Ref. 2).

Satisfactory leakage rate test results are a requirement for the establishment of containment OPERABILITY.

The containment satisfies Criterion 3 of 10 CFR 50.36(c)(2)(ii).

LCO

Containment OPERABILITY is maintained by limiting leakage to $\leq 1.0\ L_a$, except prior to the first startup after performing a required Containment Leakage Rate Testing Program leakage test. At this time, the applicable leakage rate limits must be met.

Compliance with this LCO will ensure a containment configuration, including equipment hatches, that is structurally sound and that will limit leakage to those leakage rates assumed in the safety analysis.

Individual leakage rates specified for the containment air lock (LCO 3.6.2), purge valves with resilient seals, and secondary bypass

BASES (continued)

APPLICABLE SAFETY ANALYSES

The DBAs that result in a release of radioactive material within containment are a loss of coolant accident and a rod ejection accident (Ref. 1). The Loss of Coolant Accident (LOCA) dose analysis bounds the rod ejection accident releases. In the LOCA analysis, it is assumed that containment is OPERABLE such that release of fission products to the environment is controlled by the rate of containment leakage. The assumed containment leakage rate is 0.~~25~~15% of containment air weight per day (Ref. 1). This leakage rate is defined at Prairie Island in the Containment Leakage Rate Testing Program as L_a, the maximum allowable containment leakage rate at the containment internal design pressure P_a = 46.0 psig. This allowable leakage rate forms the basis for the acceptance criteria imposed on the SRs associated with the air locks.

The containment air locks satisfy Criterion 3 of 10 CFR 50.36(c)(2)(ii).

LCO

Each containment air lock forms part of the containment pressure boundary. As part of the containment pressure boundary, the air lock safety function is related to control of the containment leakage rate resulting from a DBA. Thus, each air lock's structural integrity and leak tightness are essential to the successful mitigation of such an event.

Each air lock is required to be OPERABLE. For the air lock to be considered OPERABLE, the air lock interlock mechanism must be OPERABLE, the air lock must be in compliance with the 10CFR50, Appendix J, Type B air lock leakage test, and both air lock doors must be OPERABLE. The interlock allows only one air lock door of an air lock to be opened at one time. This provision ensures that a gross breach of containment does not exist when containment is required to be OPERABLE. Closure of a single door in each air lock is sufficient to provide a leak tight barrier following postulated events.

BASES

APPLICABLE SAFETY ANALYSES (continued)

In calculation of control room and offsite doses following a LOCA, the accident analyses assume ~~that 25% of the equilibrium iodine inventory and 100% of the equilibrium noble gas inventory developed from maximum full power operation of the core is immediately available for leakage from containment~~ the release timing and radionuclide composition specified for the Alternative Source Term Analyses in Regulatory Guide 1.183 (Ref. 3). The containment is assumed to leak at the maximum allowable leakage rate, L_a, for the first 24 hours of the accident and at 50% of this leakage rate for the remaining duration of the accident.

The containment penetration isolation valves ensure that the containment leakage rate remains below L_a by automatically isolating penetrations that do not serve post accident functions and providing isolation capability for penetrations associated with Engineered Safety Features. The maximum isolation time for automatic containment isolation valves is 60 seconds. This isolation time is based on engineering judgment since the control room and offsite dose calculations are performed assuming that leakage from containment begins immediately following the accident with no credit for transport time or radioactive decay. The 60 second isolation time takes into consideration the time required to drain piping of fluid which can provide an initial containment isolation before the containment isolation valves are required to close and the conservative assumptions with respect to core damage occurring immediately following the accident.

The containment isolation total response time of 60 seconds includes signal delay, diesel generator startup (for loss of offsite power), and containment isolation valve stroke times.

BASES

APPLICABLE SAFETY ANALYSES (continued)

Containment Cooling System air and safety grade cooling water flow. The Containment Cooling System total response time incorporates delays to account for load restoration and motor windup (Ref. 3).

The Containment Spray System and the Containment Cooling System satisfy Criterion 3 of 10 CFR 50.36(c)(2)(ii).

LCO

During a LOCA or SLB, a minimum of one containment cooling train and one containment spray train are required to maintain the containment peak pressure and temperature below the design limits (Ref. 4). ~~Additionally, one containment spray train is also required to remove iodine from the containment atmosphere and thereby maintain concentrations below those assumed in the safety analysis.~~ Additionally, one containment spray train is also required to supply sufficient sodium hydroxide to containment to ensure that the pH of the sump liquid is alkaline. To ensure that these requirements are met, two containment spray trains and two containment cooling trains must be OPERABLE. Therefore, in the event of an accident, at least one train in each system operates, assuming the worst case single active failure occurs.

Each Containment Spray System includes a spray pump, spray headers, nozzles, valves, piping, instruments, and controls to ensure an OPERABLE flow path capable of taking suction from the RWST upon a containment spray actuation signal. Manual valves in this system that could, if improperly positioned, reduce the spray flow below that assumed for accident analysis, are blocked and tagged in the proper position and maintained under administrative control. Containment Spray System motor operated valves, MV-32096 and MV-32097 (Unit 1), and MV-32108 and MV-32109 (Unit 2) are closed with the motor control center supply breakers in the off position.

Each Containment Cooling System typically includes cooling coils, dampers, fans, and controls to ensure an OPERABLE flow path. With one CL strainer isolated, the containment cooling train on the associated CL header is OPERABLE at CL supply temperatures

B 3.6 CONTAINMENT SYSTEMS

B 3.6.9 Shield Building Ventilation System (SBVS)

BASES

BACKGROUND

As described in the USAR the SBVS is required by AEC GDC 70, "Control of Releases of Radioactivity to the Environment" (Ref. 1), to ensure that radioactive materials that leak from the primary containment into the shield building (secondary containment) following a design basis accident (DBA) are filtered and adsorbed prior to exhausting to the environment.

The containment has a secondary containment called the shield building, which is a concrete structure that surrounds the steel primary containment vessel. Between the containment vessel and the shield building inner wall is an annular space that collects a portion of the containment leakage following a loss of coolant accident (LOCA). This space also allows for periodic inspection of the outer surface of the steel containment vessel.

The SBVS establishes a negative pressure in the annulus between the shield building and the steel containment vessel following a DBA. Filters in the system then control the release of radioactive contaminants to the environment. Shield building OPERABILITY is required to ensure retention of primary containment leakage and proper operation of the SBVS.

The SBVS consists of two separate and redundant trains. Each train includes a heater, a prefilter, moisture separators, a high efficiency particulate air (HEPA) filter, an activated charcoal adsorber section for removal of radioiodines, a recirculation fan and an exhaust fan. Ductwork, valves and/or dampers, and instrumentation also form part of the system. The ventilation system for each shield building includes a vent stack which penetrates the shield building dome and discharges to the atmosphere. The moisture separators function to reduce the moisture content of the airstream. The HEPA filter ~~and the charcoal adsorber section are~~is credited in the analysis. The charcoal adsorber is not credited in the analysis. The

BASES

BACKGROUND (continued)

system initiates and maintains a negative air pressure in the shield building by means of filtered exhaust ventilation of the shield building following receipt of a safety injection (SI) signal. The system is described in Reference 2.

The prefilters remove large particles in the air, and the moisture separators remove entrained water droplets present, to prevent excessive loading of the HEPA filters and charcoal adsorbers. The heaters are designed to dry incoming air at 100% saturation by increasing the temperature of the air entering the charcoal bed. ~~The air is then dry enough to support the charcoal adsorber iodine removal efficiency requirements.~~

The SBVS reduces the radioactive content in the shield building atmosphere following a DBA. Loss of the SBVS could cause site boundary doses, in the event of a DBA, to exceed the values given in the licensing basis.

APPLICABLE SAFETY ANALYSES

The SBVS design basis is established by the consequences of the limiting DBA, which is a LOCA. The accident analysis (Ref. 3) assumes that only one train of the SBVS is functional due to a single failure that disables the other train. The accident analysis accounts for the reduction in airborne radioactive material provided by the remaining one train of this filtration system. The amount of fission products available for release from containment is determined for a LOCA.

The modeled SBVS actuation in the safety analyses is based upon a worst case response time following an SI initiated at the limiting setpoint. The total response time, from accident initiation to attaining a negative pressure in the shield building, is less than ~~4.5~~12 minutes. This response time bounds the signal delay, diesel generator startup and sequencing time, system startup time, and time for the system to attain the required pressure after starting.

The SBVS satisfies Criterion 3 of 10 CFR 50.36(c)(2)(ii).

BASES (continued)

LCO

In the event of a DBA, one SBVS train is required to provide the minimum particulate iodine removal assumed in the safety analysis. Two trains of the SBVS must be OPERABLE to ensure that at least one train will operate, assuming that the other train is disabled by a single active failure.

A train of SBVS is OPERABLE when its associated:

a. Recirculation and exhaust fan are OPERABLE;

b. HEPA filter ~~and charcoal adsorber are~~is capable of passing ~~their~~the design flow and performing the~~ir~~ filtration function;

c. Manual valves and dampers are properly positioned and automatic valves and dampers are capable of activating to their correct positions; and

d. ~~Heater, d~~Ductwork, valves, dampers, instrumentation, and controls for the required flow path are OPERABLE.

APPLICABILITY

In MODES 1, 2, 3, and 4, a DBA could lead to fission product release to containment that leaks to the shield building. The large break LOCA, on which this system's design is based, is a full power event. Less severe LOCAs and leakage still require the system to be OPERABLE throughout these MODES. The probability and severity of a LOCA decrease as core power and Reactor Coolant System pressure decrease. With the reactor shut down, the probability of release of radioactivity resulting from such an accident is low.

In MODES 5 and 6, the probability and consequences of a DBA are low due to the pressure and temperature limitations in these MODES. Under these conditions, the SBVS is not required to be OPERABLE.

BASES

SURVEILLANCE REQUIREMENTS (continued)

SR 3.6.9.2

This SR verifies that the required SBVS filter testing is performed in accordance with the Ventilation Filter Testing Program (VFTP). The VFTP includes testing HEPA filter performance, ~~charcoal adsorber efficiency,~~ and minimum system flow rate~~, and the physical properties of the activated charcoal (general use and following specific operations)~~. Specific test frequencies and additional information are discussed in detail in the VFTP.

SR 3.6.9.3

The automatic startup ensures that each SBVS train responds properly. The 24 month Frequency is based on the need to perform this Surveillance under the conditions that apply during a plant outage. Operating experience has shown that these components usually pass the Surveillance when performed. Therefore the Frequency was concluded to be acceptable from a reliability standpoint. Furthermore, the SR interval was developed considering that the SBVS equipment OPERABILITY is demonstrated at a 31 day Frequency by SR 3.6.9.1.

SR 3.6.9.4

The SBVS isolation dampers are tested to verify OPERABILITY. The dampers are in the closed position during normal plant operation and must reposition for accident operation to draw air through the filters. The 24 month Frequency is considered to be acceptable based on damper reliability and design, mild environmental conditions in the vicinity of the dampers, and the fact that operating experience has shown that the dampers usually pass the Surveillance when performed.

BASES

BACKGROUND (continued)

of the control room air through the redundant trains of HEPA and the charcoal filters. The operating condition initiates filtered ventilation of the air supply to the control room.

The CRSVS operation is discussed in the USAR (Ref. 1).

Redundant supply and recirculation trains provide the required filtration should an excessive pressure drop develop across the other filter train. Normally open isolation dampers are arranged in series pairs so that the failure of one damper to shut will not result in a breach of isolation. The CRSVS is designed in accordance with Seismic Category I requirements.

The CRSVS is designed to maintain the control room environment for 30 days of continuous occupancy after a Design Basis Accident (DBA) without exceeding ~~a~~ 5 rem ~~whole body dose or its equivalent to any part of the body~~TEDE.

APPLICABLE SAFETY ANALYSES

The CRSVS components are arranged in redundant, safety related ventilation trains. The location of components and ducting within the control room envelope ensures an adequate supply of filtered air to all areas requiring access. The CRSVS provides airborne radiological protection for the control room operators, as demonstrated by the control room accident dose analyses for the most limiting design basis loss of coolant accident fission product release presented in the USAR (Ref. 2). The CRSVS function also plays a significant role in protecting control room personnel during a fuel handling accident in the spent fuel pool enclosure or the containment and a main steam line break (Ref. 2).

BASES

BACKGROUND (continued)

air is then dry enough to support the charcoal adsorber iodine removal efficiency requirements.

The ABSVS would typically only be used for post accident atmospheric cleanup functions. The ABSVS and ABSV boundary are discussed in the USAR (References 1, 2 and 3).

APPLICABLE SAFETY ANALYSES

The design basis of the ABSVS is established by the large break LOCA. The potential leakage paths from the containment to the auxiliary building are discussed in Reference 1. The system evaluation assumes a passive failure of the ECCS outside containment, such as an RHR pump seal failure, during the recirculation mode (Ref. 4). In such a case, the system limits radioactive release to within the 10 CFR ~~100~~ 50.67 (Ref. 5) limits. The analysis of the effects and consequences of a large break LOCA is presented in References 3 and 4. The ABSVS also actuates following a small break LOCA, in those cases where the ECCS goes into the recirculation mode of long term cooling, to clean up releases of smaller leaks, such as from valve stem packing.

The ABSVS satisfies Criterion 3 of 10 CFR 50.36(c)(2)(ii).

LCO

Two independent and redundant trains of the ABSVS are required to be OPERABLE to ensure that at least one is available, assuming that a single failure disables the other train.

This OPERABILITY requirement ensures that the atmospheric releases, in the event of a Design Basis Accident (DBA) in containment, from ECCS pump leakage and containment leakage which bypasses the shield building would not result in doses exceeding 10 CFR 100 limits (Ref. 5).

In order for the ABSVS to be OPERABLE, the Turbine Building roof exhauster fans must be capable of being de-energized within 30 minutes following a loss of coolant accident.

BASES

LCO (continued)

An ABSVS train is considered OPERABLE when its associated:

a. Fan is OPERABLE;

b. HEPA filter and charcoal adsorbers are capable of passing their design flow and performing their filtration functions;

c. Heater, ductwork, and dampers are OPERABLE and air circulation can be maintained; and

d. Instrumentation and controls are OPERABLE.

The ABSV boundary is OPERABLE if both of the following conditions can be met:

a. Openings in the ABSV boundary are under direct administrative control and can be reduced to less than 10 square feet within 6 minutes following an accident; and

b. Dampers and actuation circuits that isolate the Auxiliary Building Normal Ventilation System following an accident are OPERABLE or can be manually isolated within ~~6~~20 minutes following an accident.

The LCO is modified by a Note allowing the ABSV boundary to be opened under administrative controls. As discussed above, openings must be closed to less than 10 square feet within ~~6~~20 minutes following an accident.

APPLICABILITY

In MODES 1, 2, 3, and 4 for either unit, the ABSVS is required to be OPERABLE.

When both units are in MODE 5 or 6, the ABSVS is not required to be OPERABLE.

BASES

SURVEILLANCE REQUIREMENTS (continued)

SR 3.7.12.2

This SR verifies that the required ABSVS testing is performed in accordance with the Ventilation Filter Testing Program (VFTP).

The VFTP includes testing HEPA filter performance, charcoal adsorbers efficiency, minimum system flow rate, and the physical properties of the activated charcoal (general use and following specific operations).

Specific test Frequencies and additional information are discussed in detail in the VFTP.

SR 3.7.12.3

This SR verifies proper functioning of the ABSVS by verifying the integrity of the ABSV boundary and the ability of the ABSVS to maintain a negative pressure with respect to potentially uncontaminated adjacent areas.

During the post accident mode of operation, the ABSVS is designed to maintain a slight negative pressure within the ABSV boundary with respect to the containment and shield building.

Each ABSVS train is started from the control room and the following are verified:

a. Associated Auxiliary Building Normal Ventilation System fans trip and dampers close; and

b. A measurable negative pressure is drawn within the ABSV boundary within 20~~6~~ minutes after initiation, with a 10 square foot opening within the ABSV boundary.

BASES

SURVEILLANCE REQUIREMENTS

SR 3.7.12.3 (continued)

The 92 day Frequency is based on the known reliability of equipment and the two train redundancy available.

SR 3.7.12.4

The ABSVS initiates on a safety injection signal, high radiation signal or manual actuation. This SR verifies that each ABSVS train starts and operates on an actual or simulated safety injection actuation signal or on manual initiation.

The 24 month Frequency is consistent with industry reliability experience for similar equipment. The 24 month Frequency is acceptable since this system usually passes the Surveillance when performed.

REFERENCES

1. USAR, Appendix G.
2. USAR, Section 10.3.
3. USAR, Section 14.
4. USAR, Section 6.7.
5. 10 CFR ~~100.11~~50.67.

B 3.7 PLANT SYSTEMS

B 3.7.13 ~~Spent Fuel Pool Special Ventilation System (SFPSVS)~~Not Used

~~BASES~~

~~BACKGROUND~~ ~~In this Specification, the spent fuel pool enclosure refers to the concrete building that contains the racks and storage pool used to store new and spent fuel.~~

~~SFPSVS refers to that portion of the Spent Fuel Special and Containment Inservice Purge system that provides the spent fuel pool enclosure air cleanup function.~~

~~The SFPSVS filters airborne radioactive particulates from the area of the spent fuel pool following a fuel handling accident in that area.~~

~~The Spent Fuel Pool Special Ventilation fans exhaust air to prefilter-absolute-charcoal (PAC) filters, then to the associated Shield Building vent stack (Unit 1 for Train A; Unit 2 for Train B).~~

~~The SFPSVS consists of two independent and redundant trains, each capable of meeting the design requirements.~~

~~Each train consists of a heater, a prefilter, a high efficiency particulate air (HEPA) filter, an activated charcoal adsorber section for removal of gaseous activity (principally iodines), and a fan.~~

~~Ductwork, dampers, and instrumentation also form part of the system. The heaters are designed to dry incoming air at 100% saturation by increasing the temperature of the air entering the charcoal bed. The air is then dry enough to support the charcoal adsorber iodine removal efficiency requirements.~~

~~The system initiates filtered ventilation of the spent fuel pool enclosure following receipt of a high radiation signal from a radiation detector located in the exhaust ducting of the spent fuel pool normal ventilation system. One detector actuates Train A equipment; the other actuates Train B equipment.~~

~~BASES~~

~~BACKGROUND (continued)~~

~~The SFPSVS is a standby system. Upon receipt of the actuating signal, normal air supply to and discharge from the spent fuel pool ventilation system are isolated, and the stream of ventilation air discharges through the two SFPSVS filter trains. The prefilters remove any large particles in the air to prevent excessive loading of the HEPA filters and charcoal adsorbers. The SFPSVS is discussed in the USAR (Refs. 1, 2, and 3).~~

~~APPLICABLE SAFETY ANALYSES~~

~~The SFPSVS design basis is established by the consequences of the limiting Design Basis Accident (DBA), a fuel handling accident (FHA) in the spent fuel pool enclosure. LCO 3.9.4, "Containment Penetrations," separately addresses a fuel handling accident in containment.~~

~~The analysis of the fuel handling accident, given in Reference 3, assumes that all fuel rods in an assembly are damaged. The DBA analysis of the fuel handling accident assumes that only one train of the SFPSVS is functional due to a single failure that disables the other train. The accident analysis accounts for the reduction in airborne radioactive material provided by the one remaining train of this filtration system. The amount of fission products available for release from the spent fuel pool enclosure is determined for a fuel handling accident. These assumptions and the analysis follow the guidance provided in Regulatory Guide 1.25 (Ref. 4).~~

~~The SFPSVS satisfies Criterion 3 of 10 CFR 50.36(c)(2)(ii).~~

~~LCO~~

~~Two independent and redundant trains of the SFPSVS are required to be OPERABLE to ensure that at least one train is available, assuming a single failure disables the other train. This OPERABILITY requirement ensures that the atmospheric release~~

~~BASES~~

~~LCO (continued)~~ ~~from a fuel handling accident in the spent fuel pool enclosure would not result in doses exceeding the 10 CFR 100 limits.~~

~~The SFPSVS is considered OPERABLE when the individual components necessary to control offsite exposure are OPERABLE in both trains. An SFPSVS train is considered OPERABLE when its associated:~~

~~a. Fan is OPERABLE;~~

~~b. HEPA filter and charcoal adsorber are capable of passing their design flow and performing their filtration function;~~

~~c. Heater, ductwork, and dampers are OPERABLE;~~

~~d. Spent Fuel Pool Normal Ventilation train radiation monitor is OPERABLE; and~~

~~e. Spent Fuel Pool Normal Ventilation exhaust fan is running (applicable until either SFPSVS train is running).~~

~~Opening a personnel door for personnel ingress or egress does not make the SFPSVS boundary inoperable. Blocking the door open is not allowed (Ref. 5).~~

~~APPLICABILITY~~ ~~During movement of irradiated fuel in the spent fuel pool enclosure, the SFPSVS is required to be OPERABLE to alleviate the consequences of a fuel handling accident.~~

~~ACTIONS~~ ~~The ACTIONS table is modified by a Note stating LCO 3.0.3 is not applicable. LCO 3.0.3 is not applicable while in MODE 5 or 6. However, since irradiated fuel assembly movement can occur in MODE 1, 2, 3, or 4, the ACTIONS have been modified by a Note stating that LCO 3.0.3 is not applicable. If moving irradiated fuel assemblies while in MODE 5 or 6, LCO 3.0.3 would not specify~~

~~BASES~~

~~ACTIONS (continued)~~

~~any action. If moving irradiated fuel assemblies while in MODE 1, 2, 3, or 4, the fuel movement is independent of reactor operation. Entering LCO 3.0.3, while in MODE 1, 2, 3, or 4 would require the unit to be shutdown unnecessarily.~~

~~A.1~~

~~With one SFPSVS train inoperable, action must be taken to restore OPERABLE status within 7 days.~~

~~During this period, the remaining OPERABLE train is adequate to perform the SFPSVS function.~~

~~The 7 day Completion Time is based on the risk from an event occurring requiring the inoperable SFPSVS train, and the remaining SFPSVS train providing the required protection.~~

~~B.1 and B.2~~

~~When Required Action A.1 cannot be completed within the required Completion Time, during movement of irradiated fuel assemblies in the spent fuel pool enclosure, the OPERABLE SFPSVS train must be started immediately or fuel movement suspended. This is a reasonable action, based on engineering judgement, to assure that spent fuel pool enclosure releases are filtered in the event of an accident.~~

~~An alternative to Required Action B.1 is to immediately suspend activities that could result in a release of radioactivity. Required Action B.2 places the plant in a condition that minimizes risk. If the system is not placed in operation, this action requires suspension of fuel movement, which precludes a fuel handling accident. This does not preclude the movement of fuel assemblies to a safe position.~~

~~BASES~~

~~ACTIONS (continued)~~ ~~C.1~~

~~When two trains of the SFPSVS are inoperable during movement of irradiated fuel assemblies in the spent fuel pool enclosure, action must be taken immediately to suspend movement of irradiated fuel assemblies in the spent fuel pool enclosure. This does not preclude the movement of fuel to a safe position.~~

~~SURVEILLANCE REQUIREMENTS~~ ~~SR 3.7.13.1~~

~~This SR verifies that each SFPSVS train can be started, and that the associated filter units and heaters can perform their function.~~

~~Standby systems should be checked periodically to ensure that they function properly. As the environmental and normal operating conditions on this system are not severe, testing each train once every month provides an adequate check on this system.~~

~~Each SFPSVS train must be operated with heaters energized for ≥ 15 minutes. The 31 day Frequency is based on the known reliability of the equipment and the two train redundancy available.~~

~~SR 3.7.13.2~~

~~This SR verifies that the required SFPSVS testing is performed in accordance with the Ventilation Filter Testing Program (VFTP).~~

~~The VFTP includes testing HEPA filter performance, charcoal adsorber efficiency, minimum system flow rate, and the physical properties of the activated charcoal (general use and following specific operations).~~

~~BASES~~

~~SURVEILLANCE REQUIREMENTS~~

~~SR 3.7.13.2 (continued)~~

~~Specific test frequencies and additional information are discussed in detail in the VFTP.~~

~~SR 3.7.13.3~~

~~This SR verifies that each SFPSVS train starts and operates on an actual or simulated radiation monitor actuation signal.~~

~~The 24 month Frequency is consistent with the VFTP.~~

~~SR 3.7.13.4~~

~~This SR verifies the ability of the SFPSVS fan to maintain the design flow rate of 5200 ± 10% cfm.~~

~~A 24 month Frequency (on a STAGGERED TEST BASIS) is consistent with industry reliability experience for similar equipment. The 24 month Frequency on a STAGGERED TEST BASIS is acceptable since this system usually passes the Surveillance when performed.~~

~~REFERENCES~~

~~1. USAR, Section 7.5.~~

~~2. USAR, Section 10.3.~~

~~3. USAR, Section 14.5.~~

~~4. Regulatory Guide 1.25.~~

~~5. NSP Prairie Island Safety Evaluation 50-475, "Spent Fuel Pool Personnel Access Doors".~~

B 3.7 PLANT SYSTEMS

B 3.7.14 Secondary Specific Activity

BASES

BACKGROUND

Activity in the secondary coolant results from steam generator tube outleakage from the Reactor Coolant System (RCS). Under steady state conditions, the activity is primarily iodines with relatively short half lives and, thus, indicates current conditions. During transients, I-131 spikes have been observed as well as increased releases of some noble gases. Other fission product isotopes, as well as activated corrosion products in lesser amounts, may also be found in the secondary coolant.

A limit on secondary coolant specific activity during power operation minimizes releases to the environment during normal operation, anticipated operational occurrences, and accidents.

This limit is lower than the activity value that might be expected from a 150 gpd tube leak (LCO 3.4.14, "RCS Operational LEAKAGE") of primary coolant at the limit of ~~1.0~~ 0.5 μCi/gm (LCO 3.4.17, "RCS Specific Activity"). The steam line failure is assumed to result in the release of the noble gas and iodine activity contained in the steam generator inventory, the feedwater, and the reactor coolant LEAKAGE. Most of the iodine isotopes have short half lives, (i.e., < 20 hours).

Limiting secondary specific activity also reduces site and exclusion area boundary (EAB) exposures in the event of a steam generator tube rupture (Ref. 1).

APPLICABLE SAFETY ANALYSES

The accident analysis of the main steam line break (MSLB) outside of containment, as discussed in the USAR (Ref. 1) ~~and NSP License Amendment Request correspondence (Ref. 2),~~ assume~~s~~ the initial secondary coolant specific activity to have a radioactive isotope

BASES

APPLICABLE SAFETY ANALYSES (continued)

concentration of 0.10 μCi/gm DOSE EQUIVALENT I-131. This assumption is used in the analysis for determining the radiological consequences of the postulated accident. The accident analysis, based on this and other assumptions, shows that the radiological consequences of a MSLB do not exceed a small fraction of the unit EAB limits of 10 CFR ~~100.11~~50.67. ~~for whole body and thyroid dose rates.~~

With the loss of offsite power, the remaining steam generator is available for core decay heat dissipation by venting steam to the atmosphere through the main steam safety valves (MSSVs) and steam generator power operated relief valve (SG PORV). The Auxiliary Feedwater System supplies the necessary makeup to the steam generators. Venting continues until the reactor coolant temperature and pressure have decreased sufficiently for the Residual Heat Removal System to complete the cooldown.

In the evaluation of the radiological consequences of this accident, the activity released from the steam generator connected to the failed steam line is assumed to be released directly to the environment. The unaffected steam generator is assumed to discharge steam and any entrained activity through the ~~MSSVs and~~ SG PORV and TDAFW Pump Steam Exhaust during the event. Since no credit is taken in the analysis for activity plateout or retention, the resultant radiological consequences represent a conservative estimate of the potential integrated dose due to the postulated steam line failure.

With the specified activity limit, the resultant 2 hour ~~thyroid~~ dose to a person at the EAB would be a very small fraction of Reference 3 requirements ~~if the MSSVs open for 2 hours following a trip from full power~~.

Secondary specific activity limits satisfy Criterion 2 of 10 CFR 50.36(c)(2)(ii).

BASES

ACTIONS

A.1 and A.2 (continued)

The allowed Completion Times are reasonable, based on operating experience, to reach the required unit conditions from full power conditions in an orderly manner and without challenging unit systems.

SURVEILLANCE REQUIREMENTS

SR 3.7.14.1

This SR verifies that the secondary specific activity is within the limits of the accident analysis. A gamma isotopic analysis of the secondary coolant, which determines DOSE EQUIVALENT I-131, confirms the validity of the safety analysis assumptions as to the source terms in post accident releases. It also serves to identify and trend any unusual isotopic concentrations that might indicate changes in reactor coolant activity or LEAKAGE.

The 31 day Frequency is based on the detection of increasing trends of the level of DOSE EQUIVALENT I-131, and allows for appropriate action to be taken to maintain levels below the LCO limit.

REFERENCES

1. USAR, Section 14.5.

2. ~~Letter entitled "Response to Request for Additional Information Related to License Amendment Request Dated May 15, 1997 Incorporation of Voltage-Based Steam Generator Tube Repair Criteria (TAC Nos. M98944 and M98945)", Joel P. Sorensen (NSP) to US Nuclear Regulatory Commission, dated October 20, 1997~~Deleted.

3. 10 CFR ~~100.11~~50.67.

B 3.7 PLANT SYSTEMS

B 3.7.15 Spent Fuel Storage Pool Water Level

BASES

BACKGROUND

The minimum water level in the spent fuel storage pool meets the assumptions of iodine decontamination factors following a fuel handling accident. The specified water level shields and minimizes the general area dose when the storage racks are filled to their maximum capacity. The water also provides shielding during the movement of spent fuel.

A general description of the spent fuel storage pool design and a description of the Spent Fuel Pool Cooling and Cleanup System is given in the USAR (Ref. 1). The assumptions of the fuel handling accident are given in Reference 2.

APPLICABLE SAFETY ANALYSES

The minimum water level in the spent fuel storage pool meets the assumptions of the fuel handling accident described in Regulatory Guide 1.~~25~~ 183 (Ref. 3). The resultant 2 hour ~~thyroid~~ dose per person at the exclusion area boundary is a small fraction of the 10 CFR ~~100.11~~50.67 limits.

According to Reference 3, there is 23 ft of water between the top of the damaged fuel bundle and the fuel pool surface during a fuel handling accident. With 23 ft of water, the assumptions of Reference 3 can be used directly. In practice, this LCO preserves this assumption for the bulk of the fuel in the storage racks. In the case of a single bundle dropped and lying horizontally on top of the spent fuel racks, however, there may be < 23 ft of water above the top of the fuel bundle and the surface, indicated by the width of the bundle. To offset this small nonconservatism, the analysis assumes that all fuel rods fail, although analysis shows that only the first few

BASES

ACTIONS

A.1 (continued)

assemblies while in MODES 1, 2, 3, and 4, the fuel movement is independent of reactor operations. Therefore, inability to suspend movement of irradiated fuel assemblies is not sufficient reason to require a reactor shutdown.

SURVEILLANCE REQUIREMENTS

SR 3.7.15.1

This SR verifies sufficient spent fuel storage pool water is available in the event of a fuel handling accident. The water level in the spent fuel storage pool must be checked periodically. The 7 day Frequency is appropriate because the volume in the pool is normally stable. Water level changes are controlled by plant procedures and are acceptable based on operating experience.

During refueling operations, the level in the spent fuel storage pool is in equilibrium with the refueling cavity, and the level in the refueling cavity is checked daily in accordance with SR 3.9.2.1.

REFERENCES

1. USAR, Section 10.2.
2. USAR, Section 14.5.
3. Regulatory Guide 1.~~25, Rev. 0~~183, dated July 2000.

B 3.9 REFUELING OPERATIONS

B 3.9.4 Decay Time~~Containment Penetrations~~

BASES

BACKGROUND

The primary purpose of the decay time requirement is to ensure that the fission product inventories assumed in the fuel handling accident analyses are met. As soon as the reactor is subcritical, the quantity of fission products in the core decreases as the fission products undergo natural radioactive decay. As long as the reactor remains subcritical, this decrease will continue and the radiation levels will also decrease. In addition, to minimize personnel radiation exposures during refueling operations, it is necessary to allow the fission products to decay for an appropriate time.

The fuel handling accident analyses assume that the accident occurs at least 50 hours after plant shutdown. Specifically, a the fission product inventory is assumed to decay for 50 hours during the interval between reactor shutdown and movement of assemblies from the reactor core.~~During movement of recently irradiated fuel assemblies (i.e. fuel that has occupied part of a critical reactor core within the previous 50 hours) within containment, a release of fission product radioactivity within containment will be restricted from escaping to the environment when the LCO requirements are met. In MODES 1, 2, 3, and 4, this is accomplished by maintaining containment OPERABLE as described in LCO 3.6.1, "Containment." In MODE 6, the potential for containment pressurization as a result of an accident is not likely; therefore, requirements to isolate the containment from the outside atmosphere can be less stringent and requirements are referred to as "containment closure" rather than "containment OPERABILITY." Containment closure means that all potential escape paths are closed. Since there is no potential for containment pressurization, the Appendix J leakage criteria and tests are not required.~~

~~The containment serves to contain fission product radioactivity that may be released from the reactor core following an accident, such that offsite radiation exposures are maintained well within the~~

~~requirements of 10 CFR 50.67. Additionally, the containment provides radiation shielding from the fission products that may be present in the containment atmosphere following accident conditions.~~

~~The containment equipment hatch, which is part of the containment pressure boundary, provides a means for moving large equipment and components into and out of containment. During movement of recently irradiated fuel assemblies within containment, the equipment hatch must be held in place by at least four bolts. Good engineering practice dictates that the bolts required by this LCO be approximately equally spaced.~~

BASES

~~BACKGROUND (continued)~~ ~~The containment air locks, which are also part of the containment pressure boundary, provide a means for personnel access during MODES 1, 2, 3, and 4 unit operation in accordance with LCO 3.6.2, "Containment Air Locks." Each air lock has a door at both ends. The doors are normally interlocked to prevent simultaneous opening when containment OPERABILITY is required. During periods of unit shutdown when containment closure is not required, the door interlock mechanism may be disabled, allowing both doors of an air lock to remain open for extended periods when frequent containment entry is necessary.~~

~~During movement of recently irradiated fuel assemblies within containment, containment closure is required; therefore, the door interlock mechanism may remain disabled but one air lock door must always remain closed.~~

~~The requirements for containment penetration closure ensure that a release of fission product radioactivity within containment will be restricted to within regulatory limits.~~

~~The Containment Purge and Exhaust System includes two subsystems, Containment Purge and Containment Inservice Purge. The containment purge subsystem includes a 36 inch purge penetration and a 36 inch exhaust penetration. The second subsystem, a minipurge system referred to as containment inservice purge, includes a 14 inch purge penetration and an 18 inch exhaust penetration.~~

~~During MODES 1, 2, 3, and 4, the two valves in each of the containment purge and exhaust penetrations are blank flanged.~~

BASES

~~BACKGROUND (continued)~~

~~In MODE 6, during handling of recent irradiated fuel, the Containment Purge and Containment Inservice Purge systems must remain closed.~~

~~The other containment penetrations that provide direct access from containment atmosphere to outside atmosphere must be isolated on at least one side. Isolation may be achieved by a closed automatic isolation valve, or by a manual isolation valve, or blind flange, or equivalent. Equivalent isolation methods must be approved and may include use of a material that can provide a temporary, atmospheric pressure, ventilation barrier for the other containment penetrations during recently irradiated fuel movements.~~

APPLICABLE SAFETY ANALYSES

The fuel handling accident is a design basis accident which considers an accident within the reactor core or the Spent Fuel Pool.

Since the fuel removed from the reactor following reactor shut down is the most recently irradiated fuel, the fuel handling accident during movement of irradiated fuel within the reactor core is the limiting case. The fuel handling accident within the reactor core and the Spent Fuel Pool are assumed to occur after the fuel has decayed for 50 hours. The fuel handling accidents were analyzed using the Alternative Source Term methodology governed by 10 CFR 50.67 and the guidelines of Regulatory Guide 1.183 (Reference 1). The radiological consequences of the FHA using the AST methodology are well within the dose limits in 10 CFR 50.67 and meet the acceptance criteria of RG 1.183 for the exclusion area boundary (EAB), low population zone (LPZ) and the control room (Reference 2).~~During CORE ALTERATIONS or movement of irradiated fuel assemblies within containment, the most severe radiological consequences result from a fuel handling accident involving recently irradiated fuel. The fuel handling accident is a postulated event that involves damage to irradiated fuel (Ref. 1). Fuel handling accidents include dropping a single irradiated fuel assembly and handling tool or a heavy object onto other irradiated fuel assemblies. The requirements of LCO 3.9.2, "Refueling Cavity Water Level," and irradiated fuel movement with containment closure capability or a~~

~~minimum decay time of 50 hours without containment closure capability ensure that the release of fission product radioactivity, subsequent to a fuel handling accident, results in doses that are well within the guideline values specified in 10 CFR 50.67. The acceptance limit for offsite radiation exposure is 25% of 10 CFR 50.67 values or the NRC staff approved licensing basis (e.g., a specified fraction of 10 CFR 50.67 limits).~~

~~Containment penetrations~~Decay time satisfies~~y~~ Criterion 3 of 10 CFR 50.36(c)(2)(ii).

BASES (continued)

LCO

The specified decay time limit requires the reactor to be subcritical for at least 50 hours. Implicit in this Technical Specification is the Applicability (during movement of irradiated fuel within the reactor core). This ensures that sufficient time has elapsed to allow the radioactive decay of the short-lived fission products, thus reducing the fission product inventory and reducing the effects of a fuel handling accident.

~~The LCO is modified by a Note allowing penetration flow paths with direct access from the containment atmosphere to the outside atmosphere to be unisolated under administrative controls. Administrative controls ensure that 1) appropriate personnel are aware of the open status of the penetration flow path during movement of irradiated fuel assemblies within containment, and 2) specified individuals are designated and readily available to isolate the flow path in the event of a fuel handling accident.~~

~~This LCO limits the consequences of a fuel handling accident involving irradiated fuel in containment by limiting the potential escape paths for fission product radioactivity released within containment.~~

~~The LCO requires penetrations providing direct access from the containment atmosphere to the outside atmosphere to be closed, including containment purge and exhaust penetrations.~~

BASES (continued)

APPLICABILITY

The decay time restriction is applicable only during movement of irradiated fuel within the reactor core following a reactor shutdown. Once this restriction is met for a reactor core following shutdown, the fuel removed from the core and transferred to the Spent Fuel Pool will also meet the decay time restrictions. Thus all subsequent movements of irradiated fuel will meet the 50 hour decay time limit and be consistent with the fuel handling accident assumptions.~~The containment penetration requirements are applicable during movement of recently irradiated fuel assemblies within containment because this is when there is a potential for the limiting fuel handling accident.~~

~~In MODES 1, 2, 3, and 4, containment penetration requirements are addressed by LCO 3.6.1.~~

~~In MODES 5 and 6, when movement of irradiated fuel assemblies within containment is not being conducted, the potential for a fuel handling accident does not exist. Due to radioactive decay, a fuel handling accident involving handling fuel not recently irradiated (i.e., fuel that has not been occupied part of a critical reactor core within the previous 50 hours) will results in doses that are well within the guideline values specified in 10 CFR 50.67 even without containment closure capability. Therefore, under these conditions no requirements are placed on containment penetration status.~~

BASES (continued)

ACTIONS

A.1

With the reactor subcritical less than 50 hours, all movement of irradiated fuel within the reactor core must be suspended immediately. Movement of irradiated fuel within the reactor core is prohibited during the first 50 hours following reactor shutdown since the plant is not analyzed for a fuel handling accident during this period.~~If the containment equipment hatch, air locks, or any containment penetration that provides direct access from the containment atmosphere to the outside atmosphere is not in the required status, the unit must be placed in a condition where the isolation function is not needed. This is accomplished by immediately suspending movement of recently irradiated fuel assemblies within containment. Performance of these actions shall not preclude completion of movement of a fuel assembly to a safe position.~~

SURVEILLANCE REQUIREMENTS

SR 3.9.4.1

Since movement of irradiated fuel within the reactor core is prohibited during the first 50 hours following reactor shutdown, a verification of time subcritical must be made prior to movement of irradiated fuel within the reactor core. This is done by confirming the time and date of subcriticality, and verifying that at least 50 hours have elapsed. The Frequency of "once prior to movement of irradiated fuel in the reactor core" ensures operation within the design basis assumption for decay time in the refueling accident analysis.~~This Surveillance demonstrates that each of the containment penetrations required to be in its closed position is in that position.~~

~~The Surveillance is performed every 7 days during movement of recently irradiated fuel assemblies within containment. The Surveillance interval is selected to be commensurate with the normal duration of time to complete fuel handling operations. A surveillance is to be conducted before the start of refueling operations and then in accordance with the frequency specified. As such, this Surveillance ensures that a postulated fuel handling accident involving handling recently irradiated fuel that releases~~

~~fission product radioactivity within the containment will not result in a release of significant fission product radioactivity to the environment.~~

REFERENCES

1. RG 1.183, "Alternative Radiological Source Terms for Evaluating Design Basis Accidents at Nuclear Power Reactors

2~~1~~. USAR, Section 14.5.

ATTACHMENT 3 to ENCLOSURE

Technical Specification Pages (Retyped)

1.1-2
1.1-3
1.1-4
5.0-23
5.0-28
5.0-30 (Proposed TS)
5.0-31 (Proposed TS)
3.4.17-1
3.4.17-2
3.4.17-3
3.7.12-2
3.7.13-1
3.9.4-1

13 Pages Follow

1.1 Definitions (continued)

CHANNEL CHECK	A CHANNEL CHECK shall be the qualitative assessment, by observation, of channel behavior during operation. This determination shall include, where possible, comparison of the channel indication and status to other indications or status derived from independent instrument channels measuring the same parameter.
CHANNEL OPERATIONAL TEST (COT)	A COT shall be the injection of a simulated or actual signal into the channel as close to the sensor output as practicable to verify OPERABILITY of all devices in the channel required for channel OPERABILITY. The COT shall include adjustments, as necessary, of the required alarm, interlock, and trip setpoints required for channel OPERABILITY such that the setpoints are within the necessary range and accuracy. The COT may be performed by means of any series of sequential, overlapping, or total channel steps.
CORE ALTERATION	CORE ALTERATION shall be the movement of any fuel, sources, or reactivity control components, within the reactor vessel with the vessel head removed and fuel in the vessel. Suspension of CORE ALTERATIONS shall not preclude completion of movement of a component to a safe position.
CORE OPERATING LIMITS REPORT (COLR)	The COLR is the unit specific document that provides cycle specific parameter limits for the current reload cycle. These cycle specific parameter limits shall be determined for each reload cycle in accordance with Specification 5.6.5. Plant operation within these limits is addressed in individual Specifications.
DOSE EQUIVALENT I-131	DOSE EQUIVALENT I-131 shall be that concentration of I-131 (microcuries/gram) that alone would produce the same dose when inhaled as the combined activities of isotopes I-131, I-132, I-133, I-134 and I-135 actually present. The determination of DOSE EQUIVALENT I-131 shall be performed using Committed Dose Equivalent (CDE) or Committed Effective Dose Equivalent (CEDE) dose conversion factors from Table 2.1 of EPA Federal Guidance Report No. 11, "Limiting Values of Radionuclide Intake And Air Concentration and Dose Conversion Factors for Inhalation, Submersion and Ingestion."

1.1 Definitions (continued)

DOSE EQUIVALENT XE-133	DOSE EQUIVALENT XE-133 shall be that concentration of Xe-133 (microcuries per gram) that alone would produce the same acute dose to the whole body as the combined activities of noble gas nuclides Kr-85m, Kr-85, Kr-87, Kr-88, Xe-131m, Xe-133m, Xe-133, Xe-135m, Xe-135, and Xe-138 actually present. If a specific noble gas nuclide is not detected, it should be assumed to be present at the minimum detectable activity. The determination of DOSE EQUIVALENT XE-133 shall be performed using effective dose conversion factors for air submersion listed in Table III.1 of EPA Federal Guidance Report No. 12, 1993, "External Exposure to Radionuclides in Air, Water, and Soil" or the average gamma disintegration energies as provided in ICRP Publication 38, "Radionuclide Transformations" or similar source.
LEAKAGE	LEAKAGE from the Reactor Coolant System (RCS) shall be:

a. Identified LEAKAGE

1. LEAKAGE, such as that from pump seals or valve packing (except reactor coolant pump (RCP) seal water injection or leakoff), that is captured and conducted to collection systems or a sump or collecting tank;

2. LEAKAGE into the containment atmosphere from sources that are both specifically located and known either not to interfere with the operation of leakage detection systems or not to be pressure boundary LEAKAGE; or

3. RCS LEAKAGE through a steam generator to the Secondary System (primary to secondary LEAKAGE);

b. Unidentified LEAKAGE

All LEAKAGE (except RCP seal water injection or leakoff) that is not identified LEAKAGE;

1.1 Definitions (continued)

c. Pressure Boundary LEAKAGE

LEAKAGE (except primary to secondary LEAKAGE) through a nonisolable fault in an RCS component body, pipe wall, or vessel wall.

MASTER RELAY TEST	A MASTER RELAY TEST shall consist of energizing all master relays in the channel required for channel OPERABILITY and verifying the OPERABILITY of each required master relay. The MASTER RELAY TEST shall include a continuity check of each associated required slave relay. The MASTER RELAY TEST may be performed by means of any series of sequential, overlapping, or total steps.
MODE	A MODE shall correspond to any one inclusive combination of core reactivity condition, power level, average reactor coolant temperature, and reactor vessel head closure bolt tensioning specified in Table 1.1-1 with fuel in the reactor vessel.
OPERABLE - OPERABILITY	A system, subsystem, train, component, or device shall be OPERABLE or have OPERABILITY when it is capable of performing its specified safety function(s) and when all necessary attendant instrumentation, controls, normal or emergency electrical power, cooling and seal water, lubrication, and other auxiliary equipment that are required for the system, subsystem, train, component, or device to perform its specified safety function(s) are also capable of performing their related support function(s).
PHYSICS TESTS	PHYSICS TESTS shall be those tests performed to measure the fundamental nuclear characteristics of the reactor core and related instrumentation. These tests are: a. Described in Appendix J of the USAR, Pre-Operational and Startup Tests; b. Authorized under the provisions of 10 CFR 50.59; or c. Otherwise approved by the Nuclear Regulatory Commission.

5.5 Programs and Manuals (continued)

5.5.9 Ventilation Filter Testing Program (VFTP)

A program shall be established to implement the following required testing of the Control Room Special Ventilation System (CRSVS), Auxiliary Building Special Ventilation System (ABSVS), and Shield Building Ventilation System (SBVS) at least once each 24 months.

Demonstrate for the ABSVS, SBVS, and CRSVS systems that:

a. An inplace DOP test of the high efficiency particulate air (HEPA) filters shows a penetration and system bypass < 0.05% (for DOP, particles having a mean diameter of 0.7 microns);

b. A halogenated hydrocarbon test of the inplace charcoal adsorber shows a penetration and system bypass < 0.05% (SBVS not applicable);

c. A laboratory test of a sample of the charcoal adsorber, when obtained as described in Regulatory Guide 1.52, Revision 2, shows the methyl iodide penetration less than: 1) 10% penetration for ABSVS, and 2) 2.5% penetration for the CRSVS when tested in accordance with ASTM D3803-1989 at a temperature of 30°C and 95% relative humidity (RH);

d. The pressure drop across the combined HEPA filters and the charcoal adsorbers (SBVS not applicable to charcoal adsorbers) is less than 6 inches of water at the system flowrate ± 10%; and

e. A laboratory test of a sample of the charcoal adsorber shall have filter test face velocities greater than or equal to the following values for each system: 1) 54 fpm for the CRSVS, and 2) 72 fpm for the ABSVS.

5.5 Programs and Manuals (continued)

5.5.14 Containment Leakage Rate Testing Program

a. A program shall be established to implement the leakage rate testing of the containment as required by 10 CFR 50.54(o) and 10 CFR 50, Appendix J, Option B, as modified by approved exemptions. This program shall be in accordance with the guidelines contained in Regulatory Guide 1.163, "Performance-Based Containment Leak-Test Program," dated September 1995, as modified by the following exceptions:

1. Unit 1 is excepted from post-modification integrated leakage rate testing requirements associated with steam generator replacement.

2. Exception to NEI 94-01, "Industry Guideline for Implementing Performance-Based Option of 10 CFR 50, Appendix J", Section 9.2.3, to allow the following:

(i). The first Unit 1 Type A test performed after December 1, 1997 shall be performed by December 1, 2012.

(ii). The first Unit 2 Type A test performed after March 7, 1997 shall be performed by March 7, 2012.

b. The peak calculated containment internal pressure for the design basis loss of coolant accident is less than the containment internal design pressure, P_a, of 46 psig.

c. The maximum allowable primary containment leakage rate, L_a, at P_a, shall be 0.15% of primary containment air weight per day. For pipes connected to systems that are in the auxiliary building special ventilation zone, the total leakage shall be less than 0.06% of primary containment air weight per day at pressure P_a. For pipes connected to systems that are exterior to both the shield building and the auxiliary building special ventilation zone, the total leakage past isolation valves shall be less than 0.006% of primary containment air weight per day at pressure P_a.

5.5 Programs and Manuals (continued)

5.5.16 Control Room Habitability Program [PROPOSED TS]

A Control Room Envelope (CRE) Habitability Program shall be established and implemented to ensure that CRE habitability is maintained such that, with an OPERABLE Control Room Special Ventilation System (CRSVS), CRE occupants can control the reactor safely under normal conditions and maintain it in a safe condition following a radiological event, hazardous chemical release, or a smoke challenge. The program shall ensure that adequate radiation protection is provided to permit access and occupancy of the CRE under design basis accident (DBA) conditions without personnel receiving radiation exposures in excess of 5 rem total effective dose equivalent (TEDE) for the duration of the accident. The program shall include the following elements:

a. The definition of the CRE and the CRE boundary.

b. Requirements for maintaining the CRE boundary in its design conditions including configuration control and preventive maintenance.

c. Requirements for (i) determining the unfiltered air in-leakage past the CRE boundary into the CRE in accordance with the testing methods and at the Frequencies specified in Sections C.1 and C.2 of Regulatory Guide 1.197, Demonstrating Control Room Envelope Integrity at Nuclear Power Reactors," Revision 0, May 2003, and (ii) assessing CRE habitability at the Frequencies specified in Sections C.1 and C.2 of Regulatory Guide 1.197, Revision 0.

d. Measurement of leakage through the outside air intake and boundary exhaust dampers at a Frequency of 18 months. The results shall be trended and used as part of the periodic assessment of the CRE boundary.

e. The quantitative limits on unfiltered air in-leakage into the CRE. These limits shall be stated in a manner to allow direct comparison to the unfiltered in-leakage measured by the testing described in paragraph c. The unfiltered air in-leakage limit for radiological challenges is the in-leakage flow rate assumed in the licensing basis analysis of DBA consequences.

5.5 Programs and Manuals

5.5.16 Control Room Habitability Program (continued)

f. The provisions of SR 3.0.2 are applicable to the Frequencies for assessing CRE habitability, determining CRE unfiltered in-leakage, and measuring outside air intake and boundary exhaust damper leakage and assessing the CRE boundary as required by paragraphs c and d, respectively.

3.4 REACTOR COOLANT SYSTEM (RCS)

3.4.17 RCS Specific Activity

LCO 3.4.17 RCS DOSE EQUIVALENT I-131 and DOSE EQUIVALENT XE-133 specific activity shall be within limits.

APPLICABILITY: MODES 1, 2, 3 and 4.

ACTIONS

CONDITION	REQUIRED ACTION	COMPLETION TIME
A. DOSE EQUIVALENT I-131 not within limit.	----------NOTE---------- LCO 3.0.4.c is applicable. ----------	
	A.1 Verify DOSE EQUIVALENT I-131 ≤ 30 μCi/gm.	Once per 4 hours
	AND	
	A.2 Restore DOSE EQUIVALENT I-131 to within limit.	48 hours

ACTIONS (continued)

CONDITION	REQUIRED ACTION	COMPLETION TIME
B. DOSE EQUIVALENT XE-133 not within limit.	----------NOTE---------- LCO 3.0.4.c is applicable. ---------- B.1 Restore DOSE EQUIVALENT XE-133 to within limit.	48 hours
C. Required Action and associated Completion Time of Condition A or B not met. <u>OR</u> DOSE EQUIVALENT I-131 > 30 μCi/gm.	C.1 Be in MODE 3. AND C.2 Be in MODE 5.	6 hours 36 hours

SURVEILLANCE REQUIREMENTS

SURVEILLANCE		FREQUENCY
SR 3.4.17.1	----------NOTE---------- Only required to be performed in MODE 1. ---------- Verify reactor coolant DOSE EQUIVALENT XE-133 specific activity ≤ 580 μCi/gm.	7 days
SR 3.4.17.2	----------NOTE---------- Only required to be performed in MODE 1. ---------- Verify reactor coolant DOSE EQUIVALENT I-131 specific activity ≤ 0.5 μCi/gm.	14 days AND Between 2 and 6 hours after a THERMAL POWER change of ≥ 15% RTP within a 1 hour period

ACTIONS (continued)

CONDITION	REQUIRED ACTION	COMPLETION TIME
C. Required Action and associated Completion Time not met.	C.1 Be in MODE 3. AND C.2 Be in MODE 5.	6 hours 36 hours

SURVEILLANCE REQUIREMENTS

SURVEILLANCE		FREQUENCY
SR 3.7.12.1	Operate each ABSVS train for ≥ 15 minutes with the heaters operating.	31 days
SR 3.7.12.2	Perform required ABSVS filter testing in accordance with the Ventilation Filter Testing Program (VFTP).	In accordance with the VFTP
SR 3.7.12.3	Verify each ABSVS train can produce a negative pressure within 20 minutes after initiation.	92 days
SR 3.7.12.4	Verify each ABSVS train actuates on an actual or simulated actuation signal.	24 months

3.7.13 Not Used

3.9 REFUELING OPERATIONS

3.9.4 Decay Time

LCO 3.9.4 The reactor shall be subcritical for at least 50 hours.

APPLICABILITY: During movement of irradiated fuel assemblies within the reactor core.

ACTIONS

CONDITION	REQUIRED ACTION	COMPLETION TIME
A. Reactor subcritical for less than 50 hours.	A.1 Suspend movement of irradiated fuel assemblies within the reactor core.	Immediately

SURVEILLANCE REQUIREMENTS

SURVEILLANCE		FREQUENCY
SR 3.9.4.1	Verify the reactor has been subcritical for at least 50 hours.	Once prior to movement of irradiated fuel in the reactor core following reactor shutdown

Attachment 4
Regulatory Guide 1.183 Conformance Tables

NOTE: In Tables A-H, the text shown in the "RG Position" columns is taken from RG 1.183; therefore, references to footnotes, tables, and numbered references, may be found in RG 1.183.

Table A	Conformance with Regulatory Guide 1.183 Main Sections
Table B	Conformance with Regulatory Guide 1.183 Appendix A (Loss-of-Coolant Accident)
Table C	Conformance with Regulatory Guide 1.183 Appendix B (Fuel Handling Accident)
Table D	Conformance with Regulatory Guide 1.183 Appendix H (PWR Rod Ejection Accident)
Table E	Conformance with Regulatory Guide 1.183 Appendix G (PWR Locked Rotor Accident)
Table F	Conformance with Regulatory Guide 1.183 Appendix E (PWR Main Steam Line Break)
Table G	Conformance with Regulatory Guide 1.183 Appendix F (PWR Steam Generator Tube Rupture Accident)
Table H	Conformance with Regulatory Guide 1.194 (Diffuse Area Source Guidance)

REGULATORY GUIDE 1.183 COMPARISON

Table A: Conformance with Regulatory Guide 1.183 Main Sections			
RG Section	RG Position	PINGP Analysis	Comments
3.1	The inventory of fission products in the reactor core and available for release to the containment should be based on the maximum full power operation of the core with, as a minimum, current licensed values for fuel enrichment, fuel burnup, and an assumed core power equal to the current licensed rated thermal power times the ECCS evaluation uncertainty. The period of irradiation should be of sufficient duration to allow the activity of dose-significant radionuclides to reach equilibrium or to reach maximum values. The core inventory should be determined using an appropriate isotope generation and depletion computer code such as ORIGEN 2 or ORIGEN-ARP. Core inventory factors (Ci/MWt) provided in TID 14844 and used in some analysis computer codes were derived for low burnup, low enrichment fuel and should not be used with higher burnup and higher enrichment fuels.	Conforms	ORIGEN S, Version 2.0y was used to determine the bounding core inventory. The worst-case inventory was used for each of the selected 60 isotopes for the RADTRAD analyses. These values were then converted to units of Ci/MWt. Accident analyses are based on a 1852 MWt power level, based on the current accident analysis design basis allowance for instrument uncertainty plus an additional 10% allowance for future power uprating. Source terms are determined based on greater than 630 EFPD per cycle.
3.1	For the DBA LOCA, all fuel assemblies in the core are assumed to be affected and the core average inventory should be used. For DBA events that do not involve the entire core, the fission product inventory of each of the damaged fuel rods is determined by dividing the total core inventory by the number of fuel rods in the core. To account for differences in power level across the core, radial peaking factors from the facility's core operating limits report (COLR) or technical specifications should be applied in determining the inventory of the damaged rods.	Conforms	Peaking factors of 1.90 are used for DBA events that do not involve the entire core (COLR peaking factor is 1.77), with fission product inventories for damaged fuel rods determined by dividing the total core inventory by the number of fuel rods in the core.
3.1	No adjustment to the fission product inventory should be made for events postulated to occur during power operations at less than full rated power or those postulated to occur at the beginning of core life. For events postulated to occur while the facility is shutdown, e.g., a fuel handling accident, radioactive decay from the time of	Conforms	No adjustments for less than full power are made in any analyses.

Table A: Conformance with Regulatory Guide 1.183 Main Sections

RG Section	RG Position	PINGP Analysis	Comments
	shutdown may be modeled.		
3.2	The core inventory release fractions, by radionuclide groups, for the gap release and early in-vessel damage phases for DBA LOCAs are listed in Table 1 for BWRs and Table 2 for PWRs. These fractions are applied to the equilibrium core inventory described in Regulatory Position 3.1. **Table 2** **PWR Core Inventory Fraction Released Into Containment** **Group** / **Gap Release Phase** / **Early In-Vessel Phase** / **Total** Noble Gases 0.05 0.95 1.0 Halogens 0.05 0.35 0.4 Alkali Metals 0.05 0.25 0.3 Tellurium Metals 0.00 0.05 0.05 Ba, Sr 0.00 0.02 0.02 Noble Metals 0.00 0.0025 0.0025 Cerium Group 0.00 0.0005 0.0005 Lanthanides 0.00 0.0002 0.0002 Footnote 10: The release fractions listed here have been determined to be acceptable for use with currently approved LWR fuel with a peak rod burnup up to 62,000 MWD/MTU. The data in this section may not be applicable to cores containing mixed oxide (MOX) fuel.	Conforms	The release fractions from Regulatory Position 3.1, Table 1 are used. Footnote 10 criteria are met.

Table A: Conformance with Regulatory Guide 1.183 Main Sections			
RG Section	**RG Position**	**PINGP Analysis**	**Comments**
3.2	For non-LOCA events, the fractions of the core inventory assumed to be in the gap for the various radionuclides are given in Table 3. The release fractions from Table 3 are used in conjunction with the fission product inventory calculated with the maximum core radial peaking factor. **Table 3[11]** **Non-LOCA Fraction of Fission Product Inventory in Gap** **Group** / **Fraction** I-131 / 0.08 Kr-85 / 0.10 Other Noble Gases / 0.05 Other Halogens / 0.05 Alkali Metals / 0.12 Footnote 11: The release fractions listed here have been determined to be acceptable for use with currently approved LWR fuel with a peak burnup up to 62,000 MWD/MTU provided that the maximum linear heat generation rate does not exceed 6.3 kw/ft peak rod average power for rods with burnups that exceed 54 GWD/MTU. As an alternative, fission gas release calculations performed using NRC-approved methodologies may be considered on a case-by-case basis. To be acceptable, these calculations must use a projected power history that will bound the limiting projected plant-specific power history for the specific fuel load. For the BWR rod drop accident and the PWR rod ejection accident, the gap fractions are assumed to be 10% for iodines and noble gases.	Conforms (as approved in a previous PINGP submittal)	The analysis complies with Note 11 of Table 3. Typical Prairie Island core designs indicate that there are fuel assemblies that exceed the 6.3 kW/ft while >54GWD/MTU. Previous analyses (ANS 5.4) for the PINGP have demonstrated that the gap fractions in Table 3 are conservative. The methodology for determining the PINGP specific gap fractions was previously approved in the PINGP selective AST submittal for the postulated Fuel Handling Accident. Peaking factor of 1.9 used for DBA events that do not involve the entire core.

Table A: Conformance with Regulatory Guide 1.183 Main Sections

RG Section	RG Position	PINGP Analysis	Comments
3.3	Table 4 tabulates the onset and duration of each sequential release phase for DBA LOCAs at PWRs and BWRs. The specified onset is the time following the initiation of the accident (i.e., time = 0). The early in-vessel phase immediately follows the gap release phase. The activity released from the core during each release phase should be modeled as increasing in a linear fashion over the duration of the phase. For non-LOCA DBAs, in which fuel damage is projected, the release from the fuel gap and the fuel pellet should be assumed to occur instantaneously with the onset of the projected damage. **Table 4** **LOCA Release Phases** **PWRs** **BWRs** **Phase** **Onset** **Duration** **Onset** **Duration** Gap Release 30 sec 0.5 hr 2 min 0.5 hr Early In-Vessel 0.5 hr 1.3 hr 0.5 hr 1.5 hr	Conforms	The PWR durations from Table 4 are used. The LOCA activity released from the core is modeled as a linear release over the given time period using release fraction and timing files in the RADTRAD 3.03 program. Non-LOCA DBAs (that postulate fuel damage) are modeled as an instantaneous release from the fuel.
3.3	For facilities licensed with leak-before-break methodology, the onset of the gap release phase may be assumed to be 10 minutes. A licensee may propose an alternative time for the onset of the gap release phase, based on facility-specific calculations using suitable analysis codes or on an accepted topical report shown to be applicable for the specific facility. In the absence of approved alternatives, the gap release phase onsets in Table 4 should be used.	Not Applicable	Prairie Island does not credit leak-before-break methodology for DBA analyses.

Table A: Conformance with Regulatory Guide 1.183 Main Sections			
RG Section	**RG Position**	**PINGP Analysis**	**Comments**
3.4	Elements listed in Table 5 in each radionuclide group that should be considered in design basis analyses. **Table 5** **Radionuclide Groups** **Group** — **Elements** Noble Gases — Xe, Kr Halogens — I, Br Alkali Metals — Cs, Rb Tellurium Group — Te, Sb, Se, Ba, Sr Noble Metals — Ru, Rh, Pd, Mo, Tc, Co Lanthanides — La, Zr, Nd, Eu, Nb, Pm, Pr, Sm, Y, Cm, Am Cerium — Ce, Pu, Np	Conforms	The nuclides used are the 60 identified as being potentially important dose contributors to total effective dose equivalent (TEDE) in the RADTRAD code, which encompasses those listed in RG 1.183, Table 5. The Co-58 and Co-60 values used are those from the RADTRAD defaults (activation products). All other isotope activities were determined using ORIGEN-S 2.0.
3.5	Of the radioiodine released from the reactor coolant system (RCS) to the containment in a postulated accident, 95 percent of the iodine released should be assumed to be cesium iodide (CsI), 4.85 percent elemental iodine, and 0.15 percent organic iodide. This includes releases from the gap and the fuel pellets. With the exception of elemental and organic iodine and noble gases, fission products should be assumed to be in particulate form. The same chemical form is assumed in releases from fuel pins in FHAs and from releases from the fuel pins through the RCS in DBAs other than FHAs or LOCAs. However, the transport of these iodine species following release from the fuel may affect these assumed fractions. The accident-specific appendices to this regulatory guide provide additional details.	Conforms	This guidance was applied in the analyses. (95 percent of the iodine released is assumed to be cesium iodide (CsI), 4.85 percent elemental iodine, and 0.15 percent organic iodide. With the exception of elemental and organic iodine and noble gases, fission products are assumed to be in particulate form.)

Table A: Conformance with Regulatory Guide 1.183 Main Sections			
RG Section	RG Position	PINGP Analysis	Comments
3.6	The amount of fuel damage caused by non-LOCA design basis events should be analyzed to determine, for the case resulting in the highest radioactivity release, the fraction of the fuel that reaches or exceeds the initiation temperature of fuel melt and the fraction of fuel elements for which the fuel clad is breached. Although the NRC staff has traditionally relied upon the departure from nucleate boiling ratio (DNBR) as a fuel damage criterion, licensees may propose other methods to the NRC staff, such as those based upon enthalpy deposition, for estimating fuel damage for the purpose of establishing radioactivity releases.	Conforms	The currently licensed and approved assumptions regarding the amount of fuel damage for non-LOCA design basis events is used in the AST analyses.
4.1.1	The dose calculations should determine the TEDE. TEDE is the sum of the committed effective dose equivalent (CEDE) from inhalation and the deep dose equivalent (DDE) from external exposure. The calculation of these two components of the TEDE should consider all radionuclides, including progeny from the decay of parent radionuclides that are significant with regard to dose consequences and the released radioactivity.	Conforms	TEDE is calculated, with significant progeny included.
4.1.2	The exposure-to-CEDE factors for inhalation of radioactive material should be derived from the data provided in ICRP Publication 30, "Limits for Intakes of Radionuclides by Workers" (Ref. 19). Table 2.1 of Federal Guidance Report 11, "Limiting Values of Radionuclide Intake and Air Concentration and Dose Conversion Factors for Inhalation, Submersion, and Ingestion" (Ref. 20), provides tables of conversion factors acceptable to the NRC staff. The factors in the column headed "effective" yield doses corresponding to the CEDE.	Conforms	Federal Guidance Report 11 dose conversion factors (DCFs) are used. The factors in the column headed "effective" are used.

Table A: Conformance with Regulatory Guide 1.183 Main Sections			
RG Section	**RG Position**	**PINGP Analysis**	**Comments**
4.1.3	For the first 8 hours, the breathing rate of persons offsite should be assumed to be 3.5×10^{-4} cubic meters per second. From 8 to 24 hours following the accident, the breathing rate should be assumed to be 1.8×10^{-4} cubic meters per second. After that and until the end of the accident, the rate should be assumed to be 2.3×10^{-4} cubic meters per second.	Conforms	The values in Section 4.1.3 of RG 1.183 are used.
4.1.4	The DDE should be calculated assuming submergence in semi-infinite cloud assumptions with appropriate credit for attenuation by body tissue. The DDE is nominally equivalent to the effective dose equivalent (EDE) from external exposure if the whole body is irradiated uniformly. Since this is a reasonable assumption for submergence exposure situations, EDE may be used in lieu of DDE in determining the contribution of external dose to the TEDE. Table III.1 of Federal Guidance Report 12, "External Exposure to Radionuclides in Air, Water, and Soil" (Ref. 21), provides external EDE conversion factors acceptable to the NRC staff. The factors in the column headed "effective" yield doses corresponding to the EDE.	Conforms	Federal Guidance Report 12 conversion factors are used. The factors in the column headed "effective" are used.

Table A: Conformance with Regulatory Guide 1.183 Main Sections			
RG Section	**RG Position**	**PINGP Analysis**	**Comments**
4.1.5	The TEDE should be determined for the most limiting person at the EAB. The maximum EAB TEDE for any two-hour period following the start of the radioactivity release should be determined and used in determining compliance with the dose criteria in 10 CFR 50.67. The maximum two-hour TEDE should be determined by calculating the postulated dose for a series of small time increments and performing a "sliding" sum over the increments for successive two-hour periods. The maximum TEDE obtained is submitted. The time increments should appropriately reflect the progression of the accident to capture the peak dose interval between the start of the event and the end of radioactivity release (see also Table 6). Footnote 14: With regard to the EAB TEDE, the maximum two-hour value is the basis for screening and evaluation under 10 CFR 50.59. Changes to doses outside of the two-hour window are only considered in the context of their impact on the maximum two-hour EAB TEDE.	Conforms	Maximum EAB TEDE for any two-hour period is determined and documented in the analyses. Conservatively, for the LOCA, the maximum 2-hour period dose was determined by adding the maximum 2-hour dose due to containment leakage and ECCS leakage even though they do not occur simultaneously.
4.1.6	TEDE should be determined for the most limiting receptor at the outer boundary of the low population zone (LPZ) and should be used in determining compliance with the dose criteria in 10 CFR 50.67.	Conforms	This guidance is applied in the analyses through the use of the RADTRAD computer code.
4.1.7	No correction should be made for depletion of the effluent plume by deposition on the ground.	Conforms	No such corrections are made in the analyses.
4.2.1	The TEDE analysis should consider all sources of radiation that will cause exposure to control room personnel. The applicable sources will vary from facility to facility, but typically will include: • Contamination of the control room atmosphere by the intake or infiltration of the radioactive material contained in the radioactive plume released from the facility,	Conforms	The principal source of dose within the control room is due to airborne activity within the CR. The dose contributions from the other sources, such as direct shine, are also considered.

Table A: Conformance with Regulatory Guide 1.183 Main Sections			
RG Section	RG Position	PINGP Analysis	Comments
	• Contamination of the control room atmosphere by the intake or infiltration of airborne radioactive material from areas and structures adjacent to the control room envelope, • Radiation shine from the external radioactive plume released from the facility, • Radiation shine from radioactive material in the reactor containment, • Radiation shine from radioactive material in systems and components inside or external to the control room envelope, e.g., radioactive material buildup in recirculation filters.		
4.2.2	The radioactive material releases and radiation levels used in the control room dose analysis should be determined using the same source term, transport, and release assumptions used for determining the EAB and the LPZ TEDE values, unless these assumptions would result in non-conservative results for the control room.	Conforms	The source term, transport, and release methodology is the same for both the control room and offsite locations.
4.2.3	The models used to transport radioactive material into and through the control room, and the shielding models used to determine radiation dose rates from external sources, should be structured to provide suitably conservative estimates of the exposure to control room personnel.	Conforms	This guidance is applied in the analyses.
4.2.4	Credit for engineered safety features that mitigate airborne radioactive material within the control room may be assumed. Such features may include control room isolation or pressurization, or intake or recirculation filtration. Refer to Section 6.5.1, "ESF Atmospheric Cleanup System," of the SRP (Ref. 3) and Regulatory Guide 1.52, "Design, Testing, and Maintenance Criteria for Post-accident Engineered-Safety-Feature Atmosphere Cleanup System Air Filtration and Adsorption Units of Light-Water-Cooled Nuclear Power Plants" (Ref. 25), for guidance.	Conforms	Engineered safety features that mitigate airborne radioactive material within the control room are credited. These features are qualified and acceptable per the referenced guidance. Control Room and intake and recirculation filtration are credited. Isolation mode has been analyzed with automatic initiation

Table A: Conformance with Regulatory Guide 1.183 Main Sections			
RG Section	**RG Position**	**PINGP Analysis**	**Comments**
			accounting for a 5 minute time delay following event initiation. After the 5 minute time delay, credit is taken for HEPA and charcoal adsorber efficiencies.
4.2.5	Credit should generally not be taken for the use of personal protective equipment or prophylactic drugs. Deviations may be considered on a case-by-case basis.	Conforms	Such credits are not taken.
4.2.6	The dose receptor for these analyses is the hypothetical maximum exposed individual who is present in the control room for 100% of the time during the first 24 hours after the event, 60% of the time between 1 and 4 days, and 40% of the time from 4 days to 30 days. For the duration of the event, the breathing rate of this individual should be assumed to be 3.5×10^{-4} cubic meters per second.	Conforms	Standard occupancy factors and breathing rate are used throughout the analyses.
4.2.7	Control room doses should be calculated using dose conversion factors identified in Regulatory Position 4.1 above for use in offsite dose analyses. The DDE from photons may be corrected for the difference between finite cloud geometry in the control room and the semi-infinite cloud assumption used in calculating the dose conversion factors. The following expression may be used to correct the semi-infinite cloud dose, DDE_{∞}, to a finite cloud dose, DDE_{finite}, where the control room is modeled as a hemisphere that has a volume, V, in cubic feet, equivalent to that of the control room (Ref. 22). $DDE_{finite} = \frac{DDE_{\infty} V^{0.338}}{1173}$	Conforms	The equation given is utilized for finite cloud correction when calculating external doses due to the airborne activity inside the control room.
4.3	The guidance provided in Regulatory Positions 4.1 and 4.2 should be used, as applicable, in re-assessing the radiological analyses identified in Regulatory Position 1.3.1, such as those in NUREG-	Conforms	TSC habitability has been re-determined using AST and has been determined acceptable. Consistent with RG 1.183,

Table A: Conformance with Regulatory Guide 1.183 Main Sections			
RG Section	RG Position	PINGP Analysis	Comments
	0737 (Ref. 2). Design envelope source terms provided in NUREG-0737 should be updated for consistency with the AST. In general, radiation exposures to plant personnel identified in Regulatory Position 1.3.1 should be expressed in terms of TEDE. Integrated radiation exposure of plant equipment should be determined using the guidance of Appendix I of this guide.		Regulatory Position 6, Prairie Island is choosing to retain the current licensing basis EQ integrated radiation exposure assumptions.
5.1.1	The evaluations required by 10 CFR 50.67 are re-analyses of the design basis safety analyses and evaluations required by 10 CFR 50.34; they are considered to be a significant input to the evaluations required by 10 CFR 50.92 or 10 CFR 50.59. These analyses should be prepared, reviewed, and maintained in accordance with quality assurance programs that comply with Appendix B, "Quality Assurance Criteria for Nuclear Power Plants and Fuel Reprocessing Plants," to 10 CFR Part 50.	Conforms	These analyses were prepared as specified in the guidance. These analyses have been prepared and reviewed in accordance with a quality assurance program that complies with Appendix B, "Quality Assurance Criteria for Nuclear Power Plants and Fuel Reprocessing Plants," to 10 CFR Part 50.
5.1.2	Credit may be taken for accident mitigation features that are classified as safety-related, are required to be operable by technical specifications, are powered by emergency power sources, and are either automatically actuated or, in limited cases, have actuation requirements explicitly addressed in emergency operating procedures. The single active component failure that results in the most limiting radiological consequences should be assumed. Assumptions regarding the occurrence and timing of a loss of offsite power should be selected with the objective of maximizing the postulated radiological consequences.	Exception (as described in Comments column)	With one exception, accident mitigation features credited in these analyses are classified as safety-related, are required to be operable by technical specifications, are powered by emergency power sources, and are either automatically actuated.] Single active failures and loss of offsite power were also considered where required. The exception to the above is the dampers that close to isolate the Auxiliary Building Special Ventilation Zone (ABSVZ) in response to a SI signal. These dampers are not classified as safety related. However, the dampers do satisfy the following: • Each damper receives redundant

Table A: Conformance with Regulatory Guide 1.183 Main Sections			
RG Section	RG Position	PINGP Analysis	Comments
			safety related isolation signals. • The dampers fail to the closed position (position required to isolate the ABSVZ). Electrical power is not required for the damper to move to, or maintain, the required closed position. • The dampers are controlled by Technical Specifications, such that if a damper were not able to perform the required function, the boundary would be considered inoperable. • The dampers are tested quarterly as part of established Surveillance Procedures to ensure that the required function can be satisfied. More detailed discussion is provided in the license amendment request technical report. Refer to Section 3.0 in the discussion of the Auxiliary Building.
5.1.3	The numeric values that are chosen as inputs to the analyses required by 10 CFR 50.67 should be selected with the objective of determining a conservative postulated dose. In some instances, a particular parameter may be conservative in one portion of an analysis but be non-conservative in another portion of the same analysis.	Conforms	Conservative assumptions are used. The effects of tolerance values were evaluated. Those values that produce the highest doses were used in the analyses.
5.1.4	Licensees should ensure that analysis assumptions and methods are compatible with the AST and the TEDE criteria.	Conforms	Analysis assumptions and methods are compatible with the AST and the TEDE criteria per this guidance.
5.3	Atmospheric dispersion values (χ/Q) for the EAB, the LPZ, and the control room that were approved by the staff during initial facility	Conforms	New atmospheric dispersion values (χ/Q) for the control room, and the TSC were

Table A: Conformance with Regulatory Guide 1.183 Main Sections			
RG Section	RG Position	PINGP Analysis	Comments
	licensing or in subsequent licensing proceedings may be used in performing the radiological analyses identified by this guide. Methodologies that have been used for determining χ/Q values are documented in Regulatory Guides 1.3 and 1.4, Regulatory Guide 1.145, "Atmospheric Dispersion Models for Potential Accident Consequence Assessments at Nuclear Power Plants," and the paper, "Nuclear Power Plant Control Room Ventilation System Design for Meeting General Criterion 19". References 22 *[Murphy – Campe]* and 28 *[RG 1.145]* (of RG 1.183) should be used if the FSAR X/Q values are to be revised or if values are to be determined for new release points or receptor distances. Fumigation should be considered where applicable for the EAB and LPZ. For the EAB, the assumed fumigation period should be timed to be included in the worst 2-hour exposure period. The NRC computer code PAVAN implements Regulatory Guide 1.145 and its use is acceptable to the NRC staff. The methodology of the NRC computer code ARCON96 is generally acceptable to the NRC staff for use in determining control room χ/Q values.		developed, using meteorological data for the years 1993-1997. The computer code ARCON96 was used with these data to determine control room and TSC atmospheric dispersion values. Since there is no tall stack, no fumigation is considered. Control room χ/Qs were developed in conformance with the guidance provided in RG-1.194. Current licensing bases atmospheric dispersion factors (χ/Q) for the EAB and LPZ were determined to be appropriate and are used in the analyses.

Table B: Conformance with Regulatory Guide 1.183 Appendix A (Loss-of-Coolant Accident)			
RG Section	**RG Position**	**PINGP Analysis**	**Comments**
1	Acceptable assumptions regarding core inventory and the release of radionuclides from the fuel are provided in Regulatory Position 3 of this guide.	Conforms	*Fission Product Inventory:* Bounding core source terms are developed using ORIGEN-S based methodology. *Release Fractions:* Release fractions are per Table 2 of RG 1.183, and are implemented by RADTRAD. Non-LOCA Table 3 release fractions are used based on site specific analyses which shows that the values in Table 3 are conservative. *Timing of Release Phases:* Release Phases are per Table 4 of RG 1.183, and are implemented by RADTRAD. *Radionuclide Composition:* Radionuclide grouping is per Table 5 of RG 1.183, as implemented in RADTRAD. *Chemical Form:* Treatment of release chemical form is per RG 1.183, Section 3.5.
2	If the sump or suppression pool pH is controlled at values of 7 or greater, the chemical form of radioiodine released to the containment should be assumed to be 95% cesium iodide (CsI), 4.85 percent elemental iodine, and 0.15 percent organic iodide. Iodine species, including those from iodine re-evolution, for sump or suppression pool pH values less than 7 will be evaluated on a case-by-case basis. Evaluations of pH should consider the effect of acids and bases created during the LOCA event, e.g., radiolysis products. With the exception of	Conforms	The stated distributions of iodine chemical forms are used in the analyses. The post-LOCA containment sump pH has been evaluated, including consideration of the effects of acids and bases created during the LOCA event, the effects of key fission

Table B: Conformance with Regulatory Guide 1.183 Appendix A (Loss-of-Coolant Accident)			
RG Section	RG Position	PINGP Analysis	Comments
	elemental and organic iodine and noble gases, fission products should be assumed to be in particulate form.		product releases, and the impact of NaOH injection. Containment sump pH remains greater than 7.0 for the duration of the LOCA event (i.e., 30 days).
3.1	The radioactivity released from the fuel should be assumed to mix instantaneously and homogeneously throughout the free air volume of the primary containment in PWRs or the drywell in BWRs as it is released. This distribution should be adjusted if there are internal compartments that have limited ventilation exchange. The suppression pool free air volume may be included provided there is a mechanism to ensure mixing between the drywell to the wetwell. The release into the containment or drywell should be assumed to terminate at the end of the early in-vessel phase.	Conforms	The radioactivity release from the fuel is assumed to instantaneously and homogeneously mix throughout the containment air space as it is released. Recirculation fans provide a mixing mechanism within the containment. There are no internal compartments that have limited ventilation exchange.
3.2	Reduction in airborne radioactivity in the containment by natural deposition within the containment may be credited. Acceptable models for removal of iodine and aerosols are described in Chapter 6.5.2, "Containment Spray as a Fission Product Cleanup System," of the Standard Review Plan (SRP), NUREG-0800 (Ref. A-1) and in NUREG/CR-6189, "A Simplified Model of Aerosol Removal by Natural Processes in Reactor Containments" (Ref. A-2). The latter model is incorporated into the analysis code RADTRAD (Ref. A-3).	Conforms	For the PINGP, the reduction in airborne radioactivity in the containment by natural deposition within the containment uses the RADTRAD3.03 Powers model for aerosol removal coefficient with a 10-percentile probability.
3.3	Reduction in airborne radioactivity in the containment by containment spray systems that have been designed and are maintained in accordance with Chapter 6.5.2 of the SRP (Ref. A-1) may be credited. Acceptable models for the removal of iodine and aerosols are described in Chapter 6.5.2 of the SRP and NUREG/CR-5966, "A Simplified Model of Aerosol Removal by Containment Sprays"1 (Ref. A-4). This simplified model is incorporated into the analysis code RADTRAD (Refs. A-1 to A-3).	Not applicable	No credit is taken for the containment spray system in reducing airborne radioactivity in containment for the DBA analysis.

Table B: Conformance with Regulatory Guide 1.183 Appendix A (Loss-of-Coolant Accident)			
RG Section	RG Position	PINGP Analysis	Comments
	The evaluation of the containment sprays should address areas within the primary containment that are not covered by the spray drops. The mixing rate attributed to natural convection between sprayed and unsprayed regions of the containment building, provided that adequate flow exists between these regions, is assumed to be two turnovers of the unsprayed regions per hour, unless other rates are justified. The containment building atmosphere may be considered a single, well-mixed volume if the spray covers at least 90% of the volume and if adequate mixing of unsprayed compartments can be shown. The SRP sets forth a maximum decontamination factor (DF) for elemental iodine based on the maximum iodine activity in the primary containment atmosphere when the sprays actuate, divided by the activity of iodine remaining at some time after decontamination. The SRP also states that the particulate iodine removal rate should be reduced by a factor of 10 when a DF of 50 is reached. The reduction in the removal rate is not required if the removal rate is based on the calculated time-dependent airborne aerosol mass. There is no specified maximum DF for aerosol removal by sprays. The maximum activity to be used in determining the DF is defined as the iodine activity in the columns labeled "Total" in Tables 1 and 2 of this guide multiplied by 0.05 for elemental iodine and by 0.95 for particulate iodine (i.e., aerosol treated as particulate in SRP methodology).		
3.4	Reduction in airborne radioactivity in the containment by in-containment recirculation filter systems may be credited if these systems meet the guidance of Regulatory Guide 1.52 and Generic Letter 99-02 (Refs. A-5 and A-6). The filter media loading caused by the increased aerosol release associated with the revised source term should be addressed.	Not Applicable	Not applicable for Prairie Island. In-containment recirculation filters are not credited in the analyses.
3.5	Reduction in airborne radioactivity in the containment by suppression pool scrubbing in BWRs should generally not be credited. However, the	Not Applicable	Not applicable for a PWR

Table B: Conformance with Regulatory Guide 1.183 Appendix A (Loss-of-Coolant Accident)			
RG Section	RG Position	PINGP Analysis	Comments
	staff may consider such reduction on an individual case basis. The evaluation should consider the relative timing of the blowdown and the fission product release from the fuel, the force driving the release through the pool, and the potential for any bypass of the suppression pool (Ref. 7). Analyses should consider iodine re-evolution if the suppression pool liquid pH is not maintained greater than 7.		
3.6	Reduction in airborne radioactivity in the containment by retention in ice condensers, or other engineering safety features not addressed above, should be evaluated on an individual case basis. See Section 6.5.4 of the SRP (Ref. A-1).	Not Applicable	Prairie Island does not have ice condensers. No other removal mechanisms are credited other than natural deposition.
3.7	The primary containment (i.e., drywell for Mark I and II containment designs) should be assumed to leak at the peak pressure technical specification leak rate for the first 24 hours. For PWRs, the leak rate may be reduced after the first 24 hours to 50% of the technical specification leak rate. For BWRs, leakage may be reduced after the first 24 hours, if supported by plant configuration and analyses, to a value not less than 50% of the technical specification leak rate. Leakage from subatmospheric containments is assumed to terminate when the containment is brought to and maintained at a subatmospheric condition as defined by technical specifications. For BWRs with Mark III containments, the leakage from the drywell into the primary containment should be based on the steaming rate of the heated reactor core, with no credit for core debris relocation. This leakage should be assumed during the two-hour period between the initial blowdown and termination of the fuel radioactivity release (gap and early in-vessel release phases). After two hours, the radioactivity is assumed to be uniformly distributed throughout the drywell and the primary containment.	Conforms	The analyses follow the guidance for PWRs (the analyzed leak rate is reduced after the first 24 hours to 50% of the technical specification leak rate). Prairie Island does not have a subatmospheric primary containment.
3.8	If the primary containment is routinely purged during power operations,	Not	Per procedure, the Prairie Island

Table B: Conformance with Regulatory Guide 1.183 Appendix A (Loss-of-Coolant Accident)			
RG Section	**RG Position**	**PINGP Analysis**	**Comments**
	releases via the purge system prior to containment isolation should be analyzed and the resulting doses summed with the postulated doses from other release paths. The purge release evaluation should assume that 100% of the radionuclide inventory in the reactor coolant system liquid is released to the containment at the initiation of the LOCA. This inventory should be based on the technical specification reactor coolant system equilibrium activity. Iodine spikes need not be considered. If the purge system is not isolated before the onset of the gap release phase, the release fractions associated with the gap release and early in-vessel phases should be considered as applicable.	applicable.	containment is not routinely purged.
4.1	Leakage from the primary containment should be considered to be collected, processed by engineered safety feature (ESF) filters, if any, and released to the environment via the secondary containment exhaust system during periods in which the secondary containment has a negative pressure as defined in technical specifications. Credit for an elevated release should be assumed only if the point of physical release is more than two and one-half times the height of any adjacent structure.	Conforms	Leakage from containment can be released through three possible paths: • Shield Building • Auxiliary Building Special Ventilation Zone • Leakage that bypasses both the Shield Building and the ABSVZ. Leakage to the SB is filtered (only the HEPA filter is credited in the analysis) and released through the Shield Building Vent Stack. Leakage to the ABSVZ is filtered (HEPA and Charcoal) and released through the Shield Building Vent Stack. Bypass leakage is not filtered. This leakage is assumed in the analysis to be released through the Shield Building Vent Stack as this provides a conservative release location.

Table B: Conformance with Regulatory Guide 1.183 Appendix A (Loss-of-Coolant Accident)			
RG Section	RG Position	PINGP Analysis	Comments
			Release from the Shield Building Vent Stack is treated as a point source. No credit is taken for an elevated release.
4.2	Leakage from the primary containment is assumed to be released directly to the environment as a ground-level release during any period in which the secondary containment does not have a negative pressure as defined in technical specifications.	Conforms	Leakage from the primary containment (a ground-level release) is assumed to be released directly to the environment during those periods prior to draw down during which the ABSVZ and SB do not maintain a negative pressure
4.3	The effect of high wind speeds on the ability of the secondary containment to maintain a negative pressure should be evaluated on an individual case basis. The wind speed to be assumed is the 1-hour average value that is exceeded only 5% of the total number of hours in the data set. Ambient temperatures used in these assessments should be the 1-hour average value that is exceeded only 5% or 95% of the total numbers of hours in the data set, whichever is conservative for the intended use (e.g., if high temperatures are limiting, use those exceeded only 5%).	Conforms	As described in the Prairie Island USAR (CLB), Appendix G, the Shield Building Vent System is designed to achieve and maintain a negative pressure within the annulus in the presence of high winds (40 mph wind equivalent). As shown in the 5-year meteorological monitoring dataset used in the development of X/Qs, the maximum 1-hour average wind speed exceeded only 5% of the time is 16.5 mph as measured at the lower elevation and 22.3 mph at the upper elevation).
4.4	Credit for dilution in the secondary containment may be allowed when adequate means to cause mixing can be demonstrated. Otherwise, the leakage from the primary containment should be assumed to be transported directly to exhaust systems without mixing. Credit for mixing, if found to be appropriate, should generally be limited to 50%.	Conforms	Credit for dilution and 50% mixing in the secondary containment (Shield Building) is assumed based on ventilation system configuration. The air to the PAC filter is drawn from the

Table B: Conformance with Regulatory Guide 1.183 Appendix A (Loss-of-Coolant Accident)			
RG Section	RG Position	PINGP Analysis	Comments
	This evaluation should consider the magnitude of the containment leakage in relation to contiguous building volume or exhaust rate, the location of exhaust plenums relative to projected release locations, the recirculation ventilation systems, and internal walls and floors that impede stream flow between the release and the exhaust.		top of the annulus area. The return air from the PAC filter to the annulus is supplied through a ring header at the bottom of the annulus area. This configuration is designed to promote efficient mixing.
4.5	Primary containment leakage that bypasses the secondary containment should be evaluated at the bypass leak rate incorporated in the Technical Specifications. If the bypass leakage is through water, e.g., via a filled piping run that is maintained full, credit for retention of iodine and aerosols may be considered on a case-by-case basis. Similarly, deposition of aerosol radioactivity in gas-filled lines may be considered on a case-by-case basis.	Conforms	Primary containment leakage that bypasses the secondary containment (Shield Building) is evaluated at the assumed bypass leak rate incorporated in the technical specifications.
4.6	Reduction in the amount of radioactive material released from the secondary containment because of ESF filter systems may be taken into account provided that these systems meet the guidance of Regulatory Guide 1.52 (Ref. A-5) and Generic Letter 99-02 (Ref. A-6).	Conforms	Credited ESF ventilation systems meet the guidance of Regulatory Guide 1.52 and Generic Letter 99-02.
5.1	With the exception of noble gases, all the fission products released from the fuel to the containment (as defined in Tables 1 and 2 of this guide) should be assumed to instantaneously and homogeneously mix in the primary containment sump water (in PWRs) or suppression pool (in BWRs) at the time of release from the core. In lieu of this deterministic approach, suitably conservative mechanistic models for the transport of airborne activity in containment to the sump water may be used. Note that many of the parameters that make spray and deposition models conservative with regard to containment airborne leakage are non-conservative with regard to the buildup of sump activity.	Conforms	With the exception of noble gases, all the fission products released from the fuel to the containment are assumed to instantaneously and homogeneously mix in the reactor building sump water at the time of release from the core.
5.2	The leakage should be taken as two times the sum of the simultaneous leakage from all components in the ESF recirculation systems above	Conforms	ECCS leakage is analyzed at a rate twice that allowed.

Table B: Conformance with Regulatory Guide 1.183 Appendix A (Loss-of-Coolant Accident)			
RG Section	RG Position	PINGP Analysis	Comments
	which the technical specifications, or licensee commitments to item III.D.1.1 of NUREG-0737 (Ref. A-8), would require declaring such systems inoperable. The leakage should be assumed to start at the earliest time the recirculation flow occurs in these systems and end at the latest time the releases from these systems are terminated. Consideration should also be given to design leakage through valves isolating ESF recirculation systems from tanks vented to atmosphere, e.g., emergency core cooling system (ECCS) pump miniflow return to the refueling water storage tank.		• ECCS leakage to the ABSVZ through pump seals, valve packing, mechanical joints, etc. is administratively controlled to a value of 2 gallons per hour. The accident analysis basis is 4 gallons per hour. • The accident analysis basis for ECCS backleakage to the RWST is 10 gallons per hour; i.e., twice the allowable value.
5.3	With the exception of iodine, all radioactive materials in the recirculating liquid should be assumed to be retained in the liquid phase.	Conforms	With the exception of iodine, all radioactive materials in ECCS liquids are assumed to be retained in the liquid phase.
5.4	If the temperature of the leakage exceeds 212°F, the fraction of total iodine in the liquid that becomes airborne should be assumed equal to the fraction of the leakage that flashes to vapor. This flash fraction, FF, should be determined using a constant enthalpy, h, process, based on the maximum time-dependent temperature of the sump water circulating outside the containment: $FF = \frac{h_{f1} - h_{f2}}{h_{fg}}$ *Where:* h_{f1} is the enthalpy of liquid at system design temperature and pressure; h_{f2} is the enthalpy of liquid at saturation conditions (14.7 psia, 212°F); and h_{fg} is the heat of vaporization at 212°F.	Conforms	It is assumed for the case when the temperature of the ESF leakage exceeds 212°F that the fraction of total iodine in the liquid that becomes airborne is equal to the fraction of the leakage that flashes to vapor. This flash fraction, FF, is determined assuming a constant enthalpy, h, process, to be no more than 10% based on the maximum time-dependent temperature of the sump water circulating outside the containment. Time dependent flash

Table B: Conformance with Regulatory Guide 1.183 Appendix A (Loss-of-Coolant Accident)			
RG Section	RG Position	PINGP Analysis	Comments
			fractions (based on sump liquid temperature) are determined and justified in the calculation.
5.5	If the temperature of the leakage is less than 212°F or the calculated flash fraction is less than 10%, the amount of iodine that becomes airborne should be assumed to be 10% of the total iodine activity in the leaked fluid, unless a smaller amount can be justified based on the actual sump pH history and area ventilation rates.	Conforms (see Comments Column)	It is assumed consistent with RG 1.183, Appendix A, Section 5.5 that if the temperature of the leakage is less than 212°F or if the calculated flash fraction (FF) is less than 10%, then the amount of iodine that becomes airborne should be assumed to be 10% of the total iodine activity in the leaked fluid, unless a smaller amount can be justified based on the actual sump pH history and area ventilation. An evaluation was performed based on the plant-specific post-LOCA sump water temperature, pH, and iodine concentration indicates that an ESF leakage FF of 3% is conservative because it is at least 6 times greater than the analytically derived average limit of 0.48% and 2.68 times greater than the experimentally measured limit of 1.12%
5.6	The radioiodine that is postulated to be available for release to the environment is assumed to be 97% elemental and 3% organic. Reduction in release activity by dilution or holdup within buildings, or by ESF ventilation filtration systems, may be credited where applicable. Filter systems used in these applications should be evaluated against the guidance of Regulatory Guide 1.52 (Ref. A-5) and Generic Letter 99-02 (Ref. A-6).	Conforms	The radioiodine available for release to the environment is assumed to be 97% elemental and 3% organic. The credited Control Room recirculation charcoal and HEPA filters meet the requirements of RG 1.52 and Generic Letter 99-02. These are

Table B: Conformance with Regulatory Guide 1.183 Appendix A (Loss-of-Coolant Accident)			
RG Section	RG Position	PINGP Analysis	Comments
			credited at 95% efficiency for elemental and organic iodines. Aerosol removal efficiencies are assumed to be 99% based on the HEPA/charcoal combination. The filter efficiency for the Auxiliary Building exhaust is 80%. These filters meet the requirements of RG 1.52 and Generic Letter 99-02
7.0	The radiological consequences from post-LOCA primary containment purging as a combustible gas or pressure control measure should be analyzed. If the installed containment purging capabilities are maintained for purposes of severe accident management and are not credited in any design basis analysis, radiological consequences need not be evaluated. If the primary containment purging is required within 30 days of the LOCA, the results of this analysis should be combined with consequences postulated for other fission product release paths to determine the total calculated radiological consequences from the LOCA. Reduction in the amount of radioactive material released via ESF filter systems may be taken into account provided that these systems meet the guidance in Regulatory Guide 1.52 (Ref. A-5) and Generic Letter 99-02 (Ref. A-6).	Not applicable	Purging of containment is not required as part of the design bases during post-LOCA mitigation for combustible gas or pressure control measures.

Table C: Conformance with Regulatory Guide 1.183 Appendix B (Fuel Handling Accident)			
RG Section	**RG Position**	**PINGP Analysis**	**Comments**
1	Acceptable assumptions regarding core inventory and the release of radionuclides from the fuel are provided in Regulatory Position 3 of this guide.	Conforms	See Table A above for conformance with Regulatory Guide 1.183 Appendix B (Fuel Handling Accident). The bounding inventory of fission products in the reactor core and available for release to the containment is based on the maximum full power operation of the core with current licensed values for fuel enrichment, fuel burnup, and a core power equal to the current licensed rated thermal power times the ECCS evaluation uncertainty. Additional conservatisms are added as discussed in Table A of this document to ensure the bounding source term was determined.
1.1	The number of fuel rods damaged during the accident should be based on a conservative analysis that considers the most limiting case. This analysis should consider parameters such as the weight of the dropped heavy load or the weight of a dropped fuel assembly (plus any attached handling grapples), the height of the drop, and the compression, torsion, and shear stresses on the irradiated fuel rods. Damage to adjacent fuel assemblies, if applicable (e.g., events over the reactor vessel), should be considered.	Conforms	The number of fuel rods damaged is equal to one fuel assembly. As currently described in the Prairie Island USAR Section 14.5.1 (Fuel Handling Accidents), the accident is defined as the drop of a spent fuel assembly (SFA) onto the spent fuel pool floor or the core, resulting in the postulated rupture of the cladding of all fuel rods in the dropped assembly.

Table C: Conformance with Regulatory Guide 1.183 Appendix B (Fuel Handling Accident)			
RG Section	RG Position	PINGP Analysis	Comments
1.2	*The fission product release from the breached fuel is based on* Regulatory Position 3.2 of this guide and the estimate of the number of fuel rods breached. All the gap activity in the damaged rods is assumed to be instantaneously released. Radionuclides that should be considered include xenons, kryptons, halogens, cesiums, and rubidiums.	*Conforms*	*Previous analyses (ANS 5.4) for the* PINGP have demonstrated that the gap fractions in Table 3 are conservative. The methodology for determining the PINGP specific gap fractions was previously approved in the PINGP selective AST submittal for the postulated Fuel Handling Accident.
1.3	The chemical form of radioiodine released from the fuel to the spent fuel pool should be assumed to be 95% cesium iodide (CsI), 4.85 percent elemental iodine, and 0.15 percent organic iodide. The CsI released from the fuel is assumed to completely dissociate in the pool water. Because of the low pH of the pool water, the iodine re-evolves as elemental iodine. This is assumed to occur instantaneously. The NRC staff will consider, on a case-by-case basis, justifiable mechanistic treatment of the iodine release from the pool.	Conforms	All iodine added to the reactor vessel or spent fuel pool is assumed to instantaneously dissociate and re-evolve as elemental iodine and treated appropriately with regard to pool pH.
2	If the depth of water above the damaged fuel is 23 feet or greater, the decontamination factors for the elemental and organic species are 500 and 1, respectively, giving an overall effective decontamination factor of 200 (i.e., 99.5% of the total iodine released from the damaged rods is retained by the water). This difference in decontamination factors for elemental (99.85%) and organic iodine (0.15%) species results in the iodine above the water being composed of 57% elemental and 43% organic species. If the depth of water is not 23 feet, the decontamination factor will have to be determined on a case-by-case method (Ref. B-1).	Conforms	The analyzed water depth above damaged fuel is 23 feet. This value corresponds to the minimum depth of water coverage over the top of irradiated fuel assemblies seated in containment pool per TS 3.9.2.1 and in the spent fuel pool racks within the spent fuel pool, as per TS 3.7.15.1. Therefore, an overall DF of 200 is used per this guidance. Iodine above the water is assumed to be composed of 57% elemental and

Table C: Conformance with Regulatory Guide 1.183 Appendix B (Fuel Handling Accident)			
RG Section	RG Position	PINGP Analysis	Comments
			43% organic species.
3	The retention of noble gases in the water in the fuel pool or reactor cavity is negligible (i.e., decontamination factor of 1). Particulate radionuclides are assumed to be retained by the water in the fuel pool or reactor cavity (i.e., infinite decontamination factor).	Conforms	DF = 1 for noble gas isotopes; DF = infinite for particulate radionuclides.
4.1	The radioactive material that escapes from the fuel pool to the fuel building is assumed to be released to the environment over a 2-hour time period.	Conforms	The release to the environment is assumed to occur over a two hour period.
4.2	A reduction in the amount of radioactive material released from the fuel pool by engineered safety feature (ESF) filter systems may be taken into account provided these systems meet the guidance of Regulatory Guide 1.52 and Generic Letter 99-02 (Refs. B-2, B-3). Delays in radiation detection, actuation of the ESF filtration system, or diversion of ventilation flow to the ESF filtration system should be determined and accounted for in the radioactivity release analyses.	Conforms	The credited Control Room recirculation charcoal and HEPA filters meet the requirements of RG 1.52 and Generic Letter 99-02. These are credited at 95% efficiency for elemental and organic iodines. Aerosol removal efficiencies are assumed to be 99% based on the HEPA/charcoal combination. The analysis assumes that automatic initiation of the control room isolation and recirculation occurs 5 minutes after event initiation to account for delays in radiation detection and subsequent isolation.
4.3	The radioactivity release from the fuel pool should be assumed to be drawn into the ESF filtration system without mixing or dilution in the fuel building. If mixing can be demonstrated, credit for mixing and dilution may be considered on a case-by-case basis. This evaluation should consider the magnitude of the building volume and exhaust rate, the potential for bypass to the environment, the location of exhaust plenums	Conforms	As per RG 1.183, the release from the fuel building to the environment is assumed over a 2-hour time period. Mixing and dilution in the fuel building are not credited.

Table C: Conformance with Regulatory Guide 1.183 Appendix B (Fuel Handling Accident)			
RG Section	RG Position	PINGP Analysis	Comments
	relative to the surface of the pool, recirculation ventilation systems, and internal walls and floors that impede stream flow between the surface of the pool and the exhaust plenums.		
5.1	If the containment is isolated during fuel handling operations, no radiological consequences need to be analyzed.	Conforms	Containment isolation is not credited in the analysis. Therefore, a radiological consequence analysis is performed.
5.2	If the containment is open during fuel handling operations, but designed to automatically isolate in the event of a fuel handling accident, the release duration should be based on delays in radiation detection and completion of containment isolation. If it can be shown that containment isolation occurs before radioactivity is released to the environment, no radiological consequences need to be analyzed.	Conforms	Automatic Containment isolation is not credited. Therefore, a radiological consequence analysis is performed.
5.3	If the containment is open during fuel handling operations (e.g., personnel air lock or equipment hatch is open), the radioactive material that escapes from the reactor cavity pool to the containment is released to the environment over a 2-hour time period. Note 3: *The staff will generally require that technical specifications allowing such operations include administrative controls to close the airlock, hatch, or penetrations within 30 minutes. Such administrative controls will generally require that a dedicated individual be present, with the necessary equipment available, to restore containment closure should a fuel handling accident occur. Radiological analyses should generally not credit this manual isolation.*	Conforms (with site-specific exception regarding closure time)	The radioactive material that escapes from the reactor cavity pool to the containment is released to the environment over a 2-hour time period. Refueling area containment closure and spent fuel pool enclosure will be accomplished within a 1-hour time period as opposed to the suggested 30 minutes. Administrative controls associated with closure of doors and penetrations, as applicable, in the event of a fuel handling accident will be in place. Closure is not credited in the analysis.
5.4	A reduction in the amount of radioactive material released from the	Conforms	No filtration of the radioactive gas

Table C: Conformance with Regulatory Guide 1.183 Appendix B (Fuel Handling Accident)			
RG Section	RG Position	PINGP Analysis	Comments
	containment by ESF filter systems may be taken into account provided that these systems meet the guidance of Regulatory Guide 1.52 and Generic Letter 99-02 (Refs. B-2 and B-3). Delays in radiation detection, actuation of the ESF filtration system, or diversion of ventilation flow to the ESF filtration system should be determined and accounted for in the radioactivity release analyses.		released from the pool or automatic isolation of the accident location, with essentially all of the activity reaching the refueling floor airspace exhausted to the environment within 2 hours after the accident.
5.5	Credit for dilution or mixing of the activity released from the reactor cavity by natural or forced convection inside the containment may be considered on a case-by-case basis. Such credit is generally limited to 50% of the containment free volume. This evaluation should consider the magnitude of the containment volume and exhaust rate, the potential for bypass to the environment, the location of exhaust plenums relative to the surface of the reactor cavity, recirculation ventilation systems, and internal walls and floors that impede stream flow between the surface of the reactor cavity and the exhaust plenums.	Conforms	The activity is instantaneously released from the fuel into the containment with no credit taken for mixing in the containment, the spent fuel pool enclosure or any other structure. This creates a conservative release rate over the two-hour release period.

Table D: Conformance with Regulatory Guide 1.183 Appendix H (PWR Rod Ejection Accident)			
RG Section	RG Position	PINGP Analysis	Comments
1	Assumptions acceptable to the NRC staff regarding core inventory are in Regulatory Position 3 of this guide. For the rod ejection accident, the release from the breached fuel is based on the estimate of the number of fuel rods breached and the assumption that 10% of the core inventory of the noble gases and iodines is in the fuel gap. The release attributed to fuel melting is based on the fraction of the fuel that reaches or exceeds the initiation temperature for fuel melting and the assumption that 100% of the noble gases and 25% of the iodines contained in that fraction are available for release from containment. For the secondary system release pathway, 100% of the noble gases and 50% of the iodines in that fraction are released to the reactor coolant.	Conforms	The CREA core source terms are those associated with a DBA power level of 1852 MWth, based on the current accident analysis design basis allowance for instrument uncertainty plus an additional 10% allowance for future power uprating. The sudden rod ejection and localized temperature spike associated with the CREA results in the damage of 10% of the core (i.e., clad damage). Only 0.25 % of the damaged core releases melted fuel activity. Therefore, the source term available for release is associated with this fraction of melted fuel and the fraction of core activity existing in the gap. After accounting for release due to fuel melt, 10% of the core inventory noble gases and iodine are in the fuel gap. he release attributed to fuel melting is based on the fraction of the fuel that reaches or exceeds the initiation temperature for fuel melting and the assumption that 100% of the noble gases and 25% of the iodines contained in that fraction are available for release from

Table D: Conformance with Regulatory Guide 1.183 Appendix H (PWR Rod Ejection Accident)			
RG Section	RG Position	PINGP Analysis	Comments
			containment. For the secondary system release pathway, 100% of the noble gases and 50% of the iodines in that fraction are released to the reactor coolant
2	If no fuel damage is postulated for the limiting event, a radiological analysis is not required as the consequences of this event are bounded by the consequences projected for the loss-of-coolant accident (LOCA), main steam line break, and steam generator tube rupture.	Not Applicable	Since fuel damage is postulated, a radiological consequence analysis is performed.
3	Two release cases are to be considered. In the first, 100% of the activity released from the fuel should be assumed to be released instantaneously and homogeneously through the containment atmosphere. In the second, 100% of the activity released from the fuel should be assumed to be completely dissolved in the primary coolant and available for release to the secondary system.	Conforms	For Case 1, the ejected control rod is assumed to breach the reactor pressure vessel (RPV), effectively causing the equivalent of a small break loss of coolant accident. In this case, all activity from damaged fuel that has been mixed with the primary coolant of the Reactor Coolant System (RCS) leaks directly to the containment volume. This flashed release is assumed to instantaneously and homogeneously mix with the containment atmosphere, and is available for release to the environment via a Containment leak rate limit, or L_a. For Case 2, no breach of the RPV is assumed following the rod ejection. In this case, reactor coolant system (RCS), integrity is maintained and all

Table D: Conformance with Regulatory Guide 1.183 Appendix H (PWR Rod Ejection Accident)			
RG Section	RG Position	PINGP Analysis	Comments
			activity from damaged fuel that has been mixed with the RCS leaks to the secondary side coolant through the Steam Generator (SG) tubes via the Tech. Spec. primary to secondary coolant leakage rate of 150 gallons per day per SG. Activity is available for release from the SGs to the environment by steaming of the SG Power-Operated Relief Valves (PORVs) and the Turbine Drive AFW Pump steam exhaust. In addition to the activity released from the primary to secondary coolant, pre-existing Tech. Spec. iodine activity in the secondary coolant system is assumed to also be released.
4	The chemical form of radioiodine released to the containment atmosphere should be assumed to be 95% cesium iodide (CsI), 4.85% elemental iodine, and 0.15% organic iodide. If containment sprays do not actuate or are terminated prior to accumulating sump water, or if the containment sump pH is not controlled at values of 7 or greater, the iodine species should be evaluated on an individual case basis. Evaluations of pH should consider the effect of acids created during the rod ejection accident event, e.g., pyrolysis and radiolysis products. With the exception of elemental and organic iodine and noble gases, fission products should be assumed to be in particulate form.	Conforms	All iodine released from the SGs is conservatively assumed to be of the elemental species. This is done for RADTRAD simulation considerations, and is consistent with the RG 1.183, because elemental and organic iodine are identically treated by the computer model. Using this model, pH control is not necessary.
5	Iodine releases from the steam generators to the environment should be assumed to be 97% elemental and 3% organic.	Conforms	All iodine released from the SGs is assumed to be of the elemental

Table D: Conformance with Regulatory Guide 1.183 Appendix H (PWR Rod Ejection Accident)			
RG Section	RG Position	PINGP Analysis	Comments
			species. This is done for RADTRAD simulation considerations, and is consistent with the RG 1.183 specification of 97% elemental and 3% organic, because elemental and organic iodine are identically treated by the computer model
6	Assumptions acceptable to the NRC staff related to the transport, reduction, and release of radioactive material in and from the containment are as follows.	Conforms	(See sections 6.1 and 6.2 below)

Table D: Conformance with Regulatory Guide 1.183 Appendix H (PWR Rod Ejection Accident)			
RG Section	**RG Position**	**PINGP Analysis**	**Comments**
6.1	A reduction in the amount of radioactive material available for leakage from the containment that is due to natural deposition, containment sprays, recirculating filter systems, dual containments, or other engineered safety features may be taken into account. Refer to Appendix A to this guide for guidance on acceptable methods and assumptions for evaluating these mechanisms.	Conforms	For the PINGP, the reduction in airborne radioactivity in the containment by natural deposition within the containment as done for the LOCA is not credited for the CREA. Decay of radioactivity is credited in all compartments, prior to release. This is implemented in RADTRAD using the half-lives in the Nuclide Inventory File (NIF). The RADTRAD decay plus daughter option is used. In reality, daughter products such as xenon from iodines or iodines from tellurium are unlikely to readily escape from the fuel matrix in which the parent iodine or tellurium is contained. Nevertheless, the RADTRAD feature to include daughter effects is selected for conservatism. No credit for containment spray is taken.

Table D: Conformance with Regulatory Guide 1.183 Appendix H (PWR Rod Ejection Accident)			
RG Section	RG Position	PINGP Analysis	Comments
6.2	The containment should be assumed to leak at the leak rate incorporated in the technical specifications at peak accident pressure for the first 24 hours, and at 50% of this leak rate for the remaining duration of the accident. Peak accident pressure is the maximum pressure defined in the technical specifications for containment leak testing. Leakage from subatmospheric containments is assumed to be terminated when the containment is brought to a subatmospheric condition as defined in technical specifications.	Conforms	The containment is assumed to leak at the leak rate incorporated in the technical specifications at peak accident pressure for the first 24 hours, and at 50% of this leak rate for the remaining duration of the accident.
7.1	A leak rate equivalent to the primary-to-secondary leak rate limiting condition for operation specified in the technical specifications should be assumed to exist until shutdown cooling is in operation and releases from the steam generators have been terminated.	Conforms	The leak rate equivalent to the primary-to-secondary leak rate limiting condition for operation specified in the technical specifications is assumed to exist until shutdown cooling is in operation and releases from the steam generators have been terminated.
7.2	The density used in converting volumetric leak rates (e.g., gpm) to mass leak rates (e.g., lbm/hr) should be consistent with the basis of surveillance tests used to show compliance with leak rate technical specifications. These tests typically are based on cooled liquid. The facility's instrumentation used to determine leakage typically is located on lines containing cool liquids. In most cases, the density should be assumed to be 1.0 gm/cc (62.4 lbm/ft3).	Conforms	The density is assumed to be 1.0 gm/cc (62.4 lbm/ft3)
7.3	All noble gas radionuclides released to the secondary system are assumed to be released to the environment without reduction or mitigation.	Conforms	Noble gases are released without reduction or mitigation.
7.4	The transport model described in assumptions 5.5 and 5.6 of Appendix E should be utilized for iodine and particulates.	Conforms	The transport model described in Regulatory Positions 5.5 and 5.6 of Appendix E was utilized for iodine and particulates.

Table E: Conformance with Regulatory Guide 1.183 Appendix G (PWR Locked Rotor Accident)			
RG Section	RG Position	PINGP Analysis	Comments
1	Assumptions acceptable to the NRC staff regarding core inventory and the release of radionuclides from the fuel are in Regulatory Position 3 of this regulatory guide. The release from the breached fuel is based on Regulatory Position 3.2 of this guide and the estimate of the number of fuel rods breached.	Conforms	Previous analyses (ANS 5.4) for the PINGP have demonstrated that the gap fractions in Table 3 are conservative. The methodology for determining the PINGP specific gap fractions was previously approved in the PINGP selective AST submittal for the postulated Fuel Handling Accident. Additionally, a peaking factor of 1.9 is used for DBA events that do not involve the entire core.
2	If no fuel damage is postulated for the limiting event, a radiological analysis is not required as the consequences of this event are bounded by the consequences projected for the main steam line break outside containment.	Not Applicable	Fuel damage is assumed. Therefore, a specific analysis is performed.
3	The activity released from the fuel should be assumed to be released instantaneously and homogeneously through the primary coolant.	Conforms	The activity is assumed to be released instantaneously and homogeneously through the primary coolant.
4	The chemical form of radioiodine released from the fuel should be assumed to be 95% cesium iodide (CsI), 4.85 percent elemental iodine, and 0.15 percent organic iodide. Iodine releases from the steam generators to the environment should be assumed to be 97% elemental and 3% organic. These fractions apply to iodine released as a result of fuel damage and to iodine released during normal operations, including iodine spiking.	Conforms	Iodine chemical form is in accordance with this guidance (97% elemental, 3% organic iodines).

Table E: Conformance with Regulatory Guide 1.183 Appendix G (PWR Locked Rotor Accident)			
RG Section	**RG Position**	**PINGP Analysis**	**Comments**
5.1	*The primary-to-secondary leak rate in the steam generators should be* assumed to be the leak-rate-limiting condition for operation specified in the technical specifications. The leakage should be apportioned between the steam generators in such a manner that the calculated dose is maximized.	*Conforms*	*Prairie Island Unit 2 has* implemented alternative repair criteria. Therefore, the primary-to-secondary leak rate in the steam generators are assumed to be the leak rate limiting condition for operation specified in the technical specifications; i.e., 150 gallons per day per each SG. These values are conservatively also used for Unit 1.
5.2	The density used in converting volumetric leak rates (e.g., gpm) to mass leak rates (e.g., lbm/hr) should be consistent with the basis of surveillance tests used to show compliance with leak rate technical specifications. These tests are typically based on cool liquid. Facility instrumentation used to determine leakage is typically located on lines containing cool liquids. In most cases, the density should be assumed to be 1.0 gm/cc (62.4 lbm/ft3).	Conforms	The density is assumed to be 1.0 gm/cc (62.4 lbm/ft3)
5.3	The primary-to-secondary leakage should be assumed to continue until the primary system pressure is less than the secondary system pressure, or until the temperature of the leakage is less than 100°C (212° F). The release of radioactivity should be assumed to continue until shutdown cooling is in operation and releases from the steam generators have been terminated.	Conforms	The steaming release and primary-to-secondary coolant leakage is postulated to end at 45.5 hours, when the shutdown cooling system has been placed into operation and releases from the steam generators has stopped.
5.4	The release of fission products from the secondary system should be evaluated with the assumption of a coincident loss of offsite power.	Conforms	A coincident loss of offsite power is assumed.
5.5	All noble gas radionuclides released from the primary system are assumed to be released to the environment without reduction or mitigation.	Conforms	Noble gases are released without reduction or mitigation.

Table E: Conformance with Regulatory Guide 1.183 Appendix G (PWR Locked Rotor Accident)			
RG Section	RG Position	PINGP Analysis	Comments
5.6	The transport model described in assumptions 5.5 and 5.6 of Appendix E should be utilized for iodine and particulates.	Conforms	The transport model described in Regulatory Positions 5.5 and 5.6 of Appendix E was utilized for iodine and particulates.

Table F: Conformance with Regulatory Guide 1.183 Appendix E (PWR Main Steam Line Break)			
RG Section	RG Position	PINGP Analysis	Comments
1	Assumptions acceptable to the NRC staff regarding core inventory and the release of radionuclides from the fuel are provided in Regulatory Position 3 of this regulatory guide. The release from the breached fuel is based on Regulatory Position 3.2 of this guide and the estimate of the number of fuel rods breached. The fuel damage estimate should assume that the highest worth control rod is stuck at its fully withdrawn position.	Not applicable	No fuel damage is postulated to occur during the MSLB (see Section 2 below).
2	If no or minimal[2] fuel damage is postulated for the limiting event, the activity released should be the maximum coolant activity allowed by the technical specifications. Two cases of iodine spiking should be assumed. Footnote 2: The activity assumed in the analysis should be based on the activity associated with the projected fuel damage or the maximum technical specification values, whichever maximizes the radiological consequences. In determining dose equivalent I-131 (DE I-131), only the radioiodine associated with normal operations or iodine spikes should be included. Activity from projected fuel damage should not be included.	Conforms	The activity assumed in the analysis is based on the activity associated with the maximum technical specification values. In determining dose equivalent I-131 (DE I-131), only the radioiodine associated with normal operations or iodine spikes is included.
2.1	A reactor transient has occurred prior to the postulated main steam line break (MSLB) and has raised the primary coolant iodine concentration to the maximum value (typically 60 μCi/gm DE I-131) permitted by the technical specifications (i.e., a pre-accident iodine spike case).	Conforms	This analyzed case involves a 30 μCi/gm pre-accident Iodine spike, consistent with the PINGP Technical Specification operational Reactor Coolant System (RCS) activity concentration limit for an assumed spike. All of the spike activity is homogeneously mixed in the primary coolant, prior to accident initiation.

Table F: Conformance with Regulatory Guide 1.183 Appendix E (PWR Main Steam Line Break)			
RG Section	RG Position	PINGP Analysis	Comments
2.2	The primary system transient associated with the MSLB causes an iodine spike in the primary system. The increase in primary coolant iodine concentration is estimated using a spiking model that assumes that the iodine release rate from the fuel rods to the primary coolant (expressed in curies per unit time) increases to a value 500 times greater than the release rate corresponding to the iodine concentration at the equilibrium value (typically 1.0 µCi/gm DE I-131) specified in technical specifications (i.e., concurrent iodine spike case). A concurrent iodine spike need not be considered if fuel damage is postulated. The assumed iodine spike duration should be 8 hours. Shorter spike durations may be considered on a case-by-case basis if it can be shown that the activity released by the 8-hour spike exceeds that available for release from the fuel gap of all fuel pins.	Conforms	This case involves an accident initiated iodine spike that occurs concurrently with the release of fluid from the primary and secondary coolant systems. This spike results in a release rate from the operating limit defective fuel fraction that is 500 times the normal rate. A spike duration of eight hours is used in the analysis.
3	The activity released from the fuel should be assumed to be released instantaneously and homogeneously through the primary coolant.	Not applicable	No fuel damage is predicted for the MSLB. Activity release due to iodine spiking is release homogeneously throughout the primary coolant.
4	The chemical form of radioiodine released from the fuel should be assumed to be 95% cesium iodide (CsI), 4.85 percent elemental iodine, and 0.15 percent organic iodide. Iodine releases from the steam generators to the environment should be assumed to be 97% elemental and 3% organic. These fractions apply to iodine released as a result of fuel damage and to iodine released during normal operations, including iodine spiking.	Conforms	Iodine chemical form is in accordance with this guidance (i.e., 97% elemental and 3% organic).

Table F: Conformance with Regulatory Guide 1.183 Appendix E (PWR Main Steam Line Break)			
RG Section	RG Position	PINGP Analysis	Comments
5.1	For facilities that have not implemented alternative repair criteria (see Ref. E-1, DG-1074), the primary-to-secondary leak rate in the steam generators should be assumed to be the leak rate limiting condition for operation specified in the technical specifications. For facilities with traditional generator specifications (both per generator and total of all generators), the leakage should be apportioned between affected and unaffected steam generators in such a manner that the calculated dose is maximized.	Conforms	Prairie Island Unit 2 has implemented alternative repair criteria. Therefore, the primary-to-secondary leak rate in the steam generators are assumed to be the leak rate limiting condition for operation specified in the technical specifications; i.e., 150 gallons per day for the intact SG and 1.0 gpm for the faulted SG. These values are conservatively also used for Unit 1.
5.2	The density used in converting volumetric leak rates (e.g., gpm) to mass leak rates (e.g., lbm/hr) should be consistent with the basis of the parameter being converted. The ARC leak rate correlations are generally based on the collection of cooled liquid. Surveillance tests and facility instrumentation used to show compliance with leak rate technical specifications are typically based on cooled liquid. In most cases, the density should be assumed to be 1.0 gm/cc (62.4 lbm/ft3).	Conforms	The density is assumed to be 1.0 gm/cc (62.4 lbm/ft3).
5.3	The primary-to-secondary leakage should be assumed to continue until the primary system pressure is less than the secondary system pressure, or until the temperature of the leakage is less than 100°C (212°F). The release of radioactivity from unaffected steam generators should be assumed to continue until shutdown cooling is in operation and releases from the steam generators have been terminated.	Conforms	The steaming release and primary-to-secondary coolant leakage from the faulted steam generator is postulated to end at 75 hours, when the RCS has been cooled to less than 212°F. The steaming release and primary-to-secondary coolant leakage from the intact steam generator is postulated to end at 44.5 hours, when shutdown cooling is in operation and release from the intact steam generator has been

Table F: Conformance with Regulatory Guide 1.183 Appendix E (PWR Main Steam Line Break)			
RG Section	RG Position	PINGP Analysis	Comments
			terminated.
5.4	All noble gas radionuclides released from the primary system are assumed to be released to the environment without reduction or mitigation.	Conforms	Noble gases are released without reduction or mitigation.
5.5	The transport model described in this section should be utilized for iodine and particulate releases from the steam generators. This model is shown in Figure E-1 and summarized below: 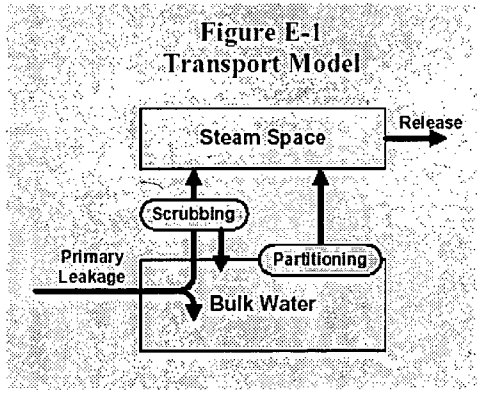 	Conforms	The transport model described in this section is utilized for iodine and particulate releases from the steam generators except that no credit is taken for scrubbing. Only partitioning is credited in the analyses.
5.5.1	A portion of the primary-to-secondary leakage will flash to vapor, based on the thermodynamic conditions in the reactor and secondary coolant. • During periods of steam generator dryout, all of the primary-to-secondary leakage is assumed to flash to vapor and be released to the environment with no mitigation. • With regard to the unaffected steam generators used for plant cooldown, the primary-to-secondary leakage can be	Conforms	Primary to secondary coolant leakage through the faulted steam generator conservatively goes directly to the environment, without mixing with any secondary coolant. Therefore, under the assumed dry-out conditions, no partitioning of any nuclides is expected to occur in this release pathway.

Table F: Conformance with Regulatory Guide 1.183 Appendix E (PWR Main Steam Line Break)			
RG Section	RG Position	PINGP Analysis	Comments
	assumed to mix with the secondary water without flashing during periods of total tube submergence.		For all post-accident releases through the PORV and the TDAFW Pump steam exhaust of the intact SG loop, the mechanism for release to the environment is steaming of the secondary coolant. Because of this release dynamic, a reduction is taken in the amount of activity released to the environment based on partitioning of nuclides between the liquid and gas states of water. For Iodine, a conservative partitioning factor of 0.1 was taken in lieu of the value of 0.01 from RG 1.183. Reviewing the specified AST release fractions, it is concluded that the only nuclides other than iodines to be released from the core source term are Noble Gas nuclides. Because of the volatility of noble gases, no partitioning is assumed for any such isotopes.
5.5.2	The leakage that immediately flashes to vapor will rise through the bulk water of the steam generator and enter the steam space. Credit may be taken for scrubbing in the generator, using the models in NUREG-0409, "Iodine Behavior in a PWR Cooling System Following a Postulated Steam Generator Tube Rupture Accident" (Ref. E-2), during periods of total submergence of the tubes.	Conforms	No credit is taken for scrubbing. See Comments for Section 5.5.1 above.

Table F: Conformance with Regulatory Guide 1.183 Appendix E (PWR Main Steam Line Break)			
RG Section	**RG Position**	**PINGP Analysis**	**Comments**
5.5.3	The leakage that does not immediately flash is assumed to mix with the bulk water.	Conforms	See Comments for Section 5.5.1 above.
5.5.4	The radioactivity in the bulk water is assumed to become vapor at a rate that is the function of the steaming rate and the partition coefficient. A partition coefficient for iodine of 100 may be assumed. The retention of particulate radionuclides in the steam generators is limited by the moisture carryover from the steam generators.	Conforms	A conservative partition coefficient of 10 is used in the analysis.
5.6	Operating experience and analyses have shown that for some steam generator designs, tube uncovery may occur for a short period following any reactor trip (Ref. E-3). The potential impact of tube uncovery on the transport model parameters (e.g., flash fraction, scrubbing credit) needs to be considered. The impact of emergency operating procedure restoration strategies on steam generator water levels should be evaluated.	Conforms	Intact SG tubes are assumed to be uncovered during the first two hours after onset of the MSLB and all iodine activity in the primary to secondary leakage is assumed to flash to vapor and be released to the environment.

Table G: Conformance with Regulatory Guide 1.183 Appendix F (PWR Steam Generator Tube Rupture Accident)			
RG Section	**RG Position**	**PINGP Analysis**	**Comments**
1	Assumptions acceptable to the NRC staff regarding core inventory and the release of radionuclides from the fuel are in Regulatory Position 3 of this guide. The release from the breached fuel is based on Regulatory Position 3.2 of this guide and the estimate of the number of fuel rods breached.	Conforms	See Table A of this document for conformance with Regulatory Guide 1.183 Appendix F (PWR Steam Generator Tube Rupture Accident). The bounding inventory of fission products in the reactor core and available for release is based on the maximum full power operation of the core with current licensed values for fuel enrichment, fuel burnup, and a core power equal to the current licensed rated thermal power times the ECCS evaluation uncertainty. Additional conservatisms are added as discussed in Table A of this document to ensure the bounding source term was determined.
2	If no or minimal[2] fuel damage is postulated for the limiting event, the activity released should be the maximum coolant activity allowed by technical specification. Two cases of iodine spiking should be assumed. Footnote #2: The activity assumed in the analysis should be based on the activity associated with the projected fuel damage or the maximum technical specification values, whichever maximizes the radiological consequences. In determining dose equivalent I-131 (DE I-131), only the radioiodine associated with normal operations or iodine spikes should be included. Activity from projected fuel damage should not be included.	Conforms	The historical design basis at the PINGP assumes no fuel damage for the postulated SGTR event. For this SGTR accident, the source terms are defined by the Tech Spec activity release rates from a maximum failed fuel fraction assumed during operation, which are characterized by the equilibrium 0.5 µCi/gm Dose Equivalent (DE) I-131 iodine activity concentration in the primary reactor coolant system. The noble gas inventory in the RCS is based on

Table G: Conformance with Regulatory Guide 1.183 Appendix F (PWR Steam Generator Tube Rupture Accident)			
RG Section	RG Position	PINGP Analysis	Comments
			operation with a conservative worst-case 1% core fuel defects. Because no fuel damage is assumed for this accident, only iodine and noble gas isotopes are modeled to contribute to dose. To identify the worst-case SGTR accident, however, two different cases of iodine spiking are analyzed, per regulatory guidance (Pre-Accident Iodine Spike and Concurrent Iodine Spike).
2.1	A reactor transient has occurred prior to the postulated steam generator tube rupture (SGTR) and has raised the primary coolant iodine concentration to the maximum value (typically 60 µCi/gm DE I-131) permitted by the technical specifications (i.e., a pre-accident iodine spike case).	Conforms	This analyzed case involves a 30 µCi/gm pre-accident Iodine spike, consistent with the B/B Technical Specification operational Reactor Coolant System (RCS) activity concentration limit for an assumed spike. All of the spike activity is homogeneously mixed in the primary coolant, prior to accident initiation.
2.2	The primary system transient associated with the SGTR causes an iodine spike in the primary system. The increase in primary coolant iodine concentration is estimated using a spiking model that assumes that the iodine release rate from the fuel rods to the primary coolant (expressed in curies per unit time) increases to a value 335 times greater than the release rate corresponding to the iodine concentration at the equilibrium value (typically 1.0 µCi/gm DE I-131) specified in technical specifications (i.e., concurrent iodine spike case). A concurrent iodine spike need not be considered if fuel damage is postulated. The assumed iodine spike duration should be 8 hours.	Conforms	The second analyzed case involves an accident initiated iodine spike that occurs concurrently with the release of fluid from the primary and secondary coolant systems. This spike results in a release rate from the operating limit defective fuel fraction (~1%) that is 335 times the normal rate, and lasts for an 8-hour duration.

Table G: Conformance with Regulatory Guide 1.183 Appendix F (PWR Steam Generator Tube Rupture Accident)			
RG Section	RG Position	PINGP Analysis	Comments
	Shorter spike durations may be considered on a case-by-case basis if it can be shown that the activity released by the 8-hour spike exceeds that available for release from the fuel gap of all fuel pins.		
3	The activity released from the fuel, if any, should be assumed to be released instantaneously and homogeneously through the primary coolant.	Conforms	Mixing in the primary coolant is assumed to be instantly and homogeneously.
4	Iodine releases from the steam generators to the environment should be assumed to be 97% elemental and 3% organic.	Conforms	Such iodine releases are assumed to be 97% elemental and 3% organic.
5.1	The primary-to-secondary leak rate in the steam generators should be assumed to be the leak rate limiting condition for operation specified in the technical specifications. The leakage should be apportioned between affected and unaffected steam generators in such a manner that the calculated dose is maximized.	Conforms	Activity that originates in the primary RCS is released to the secondary coolant by means of the primary-to-secondary coolant leak rate. This design basis leak rate value is 150 gallons per day per each steam generator.
5.2	The density used in converting volumetric leak rates (e.g., gpm) to mass leak rates (e.g., lbm/hr) should be consistent with the basis of surveillance tests used to show compliance with leak rate technical specifications. These tests are typically based on cool liquid. Facility instrumentation used to determine leakage is typically located on lines containing cool liquids. In most cases, the density should be assumed to be 1.0 gm/cc (62.4 lbm/ft3).	Conforms	The density is assumed to be 1.0 gm/cc (62.4 lbm/ft3)

Table G: Conformance with Regulatory Guide 1.183 Appendix F (PWR Steam Generator Tube Rupture Accident)			
RG Section	RG Position	PINGP Analysis	Comments
5.3	The primary-to-secondary leakage should be assumed to continue until the primary system pressure is less than the secondary system pressure, or until the temperature of the leakage is less than 100°C (212° F). The release of radioactivity from the unaffected steam generators should be assumed to continue until shutdown cooling is in operation and releases from the steam generators have been terminated.	Conforms	Release of activity from the ruptured steam generator terminates when the SG has been isolated and primary system pressure has been reduced to secondary side pressure. This is assumed to occur within the initial 30 minutes. Release of activity from the intact steam generator terminates when shutdown cooling has been established.
5.4	The release of fission products from the secondary system should be evaluated with the assumption of a coincident loss of offsite power.	Conforms	A coincident loss of offsite power is assumed.
5.5	All noble gas radionuclides released from the primary system are assumed to be released to the environment without reduction or mitigation.	Conforms	Noble gases are released without reduction or mitigation.
5.6	The transport model described in Regulatory Positions 5.5 and 5.6 of Appendix E should be utilized for iodine and particulates.	Conforms	The transport model described in Regulatory Positions 5.5 and 5.6 of Appendix E was utilized for iodine and particulates.

Table H: Conformance with Regulatory Guide 1.194 (Diffuse Area Source Guidance)			
RG Section	**RG Position**	**PINGP Analysis**	**Comments**
3.2.4	Examples of possible area sources are postulated releases from the surface of a reactor or a secondary containment building. A reasonable approach (is) to model the building surface as a vertical planar area source. This approach is not intended to address dispersion resulting from building-induced turbulence. Treatment of a release as a diffuse source will be acceptable for design basis calculations if the guidance herein is followed.	Conforms	Introductory information excerpted – no requirements.
3.2.4.1	Diffuse source modeling should be used only for those situations in which the activity being released is homogeneously distributed throughout the building and when the assumed release rate from the building surface would be reasonably constant over the surface of the building. For example, steam releases within a turbine building with roof ventilators or louvered walls would generally not be suitable for modeling as a diffuse source. (See Regulatory Positions 3.2.4.7 and 3.2.4.8.)	Conforms	Used for the following situation with respect to diffuse area sources that comply with this guidance. • Release from the Common Area of the Auxiliary Building. • Release from Auxiliary Building Normal Ventilation Make-Up Air Louver • Release from MSSV/PORV Valve configuration • Release from the TDAFW Pump Steam Exhaust/Steam Dump Valve configuration
3.2.4.2	Since leakage is more likely to occur at a penetration, analysts must consider the potential impact of building penetrations exposed to the environment* within this modeled area. If the penetration release would be more limiting, the diffuse area source model should not be used. Releases from personnel air locks and equipment hatches exposed to the environment, or containment purge releases prior to containment isolation, may need to be treated differently. It may be necessary to consider several cases to ensure that the X/Q value for the most limiting location is identified. *Penetrations that are enclosed within safety-related structures need not be considered in this evaluation if the release would be captured and released via a plant ventilation system, as ventilation	Conforms	Potential impact of building penetrations is considered.

Table H: Conformance with Regulatory Guide 1.194 (Diffuse Area Source Guidance)			
RG Section	**RG Position**	**PINGP Analysis**	**Comments**
	system releases should have already been addressed as a separate release point.		
3.2.4.3	The total release rate (e.g., Ci/second) from the building atmosphere is to be used in conjunction with the diffuse area source X/Q in assessments. This release rate is assumed to be equally distributed over the entire diffuse source area from which the radioactivity release can enter the environment. For freestanding containments, this would be the entire periphery above grade or above a building that surrounds the lower elevations of the containment. When a licensee can justify assuming collection of a portion of the release from the containment within the surrounding building, the total release from the containment may be apportioned between the exposed and enclosed building surfaces. Similarly, if the building atmosphere release is modeled through more than one simultaneous pathway (e.g., drywell leakage and main steam safety valve leakage in a BWR), only that portion of the total release released through the building surface should be used with the diffuse area X/Q. The release rate should not be averaged or otherwise apportioned over the surface area of the building. For example, reducing the release rate by 50 percent because only 50 percent of the surface faces the control room intake would be inappropriate.	Conforms	Total release rate is assumed to be equally distributed over diffuse source area.

Table H: Conformance with Regulatory Guide 1.194 (Diffuse Area Source Guidance)			
RG Section	**RG Position**	**PINGP Analysis**	**Comments**
3.2.4.4	ARCON96 uses two initial diffusion coefficients entered by the user to represent the area source. There are insufficient field measurements to mechanistically model these initial diffusion coefficients. The following deterministic equations should be used in the absence of site-specific empirical data.* Sigma Y_o = $\frac{\text{Width source area}}{6}$ Sigma Z_o = $\frac{\text{Height source area}}{6}$ *See Regulatory Position 7 regarding the use of site-specific empirical measurements.	Conforms	ARCON96 and the two equations are utilized.
3.2.4.5	The height and width of the area source (e.g., the building surface) are taken as the maximum vertical and horizontal dimensions of the above-grade building cross-sectional area perpendicular to the line of sight from the building center to the control room intake (see Figure 2). These dimensions are projected onto a vertical plane perpendicular to the line of sight and located at the closest point on the building surface to the control room intake. The release height is set at the vertical center of the projected plane. The source-to-receptor distance (slant path) is measured from this point to the control room intake.	Conforms	
3.2.4.6	Intentional releases from a secondary containment (e.g., standby gas treatment systems (SGTS) at BWR reactors) or annulus ventilation systems in dual containment structures should be treated as a ground-level release or an elevated stack release, as appropriate. The diffuse area source model may be appropriate for time intervals for which the secondary containment or annulus	Not applicable	Release from the Shield Building is conservatively assumed to be from the stack for the full duration of the accident. This is conservative as the atmospheric dispersion factor for the stack is higher than for the Shield building wall.

Table H: Conformance with Regulatory Guide 1.194 (Diffuse Area Source Guidance)			
RG Section	**RG Position**	**PINGP Analysis**	**Comments**
	ventilation system is not capable of maintaining the requisite negative pressure differential specified in technical specifications or in the FSAR. Secondary containment bypass leakage (i.e., leakage from the primary containment that bypasses the secondary containment and is not collected by the SGTS) should be treated as a ground-level release or an elevated stack release, as appropriate.		
3.2.4.7	A second possible application of the diffuse area source model is determining a X/Q value for multiple (i.e., 3 or more) roof vents. This treatment would be appropriate for configurations in which (1) the vents are in a close arrangement, (2) no individual vent is significantly* closer to the control room intake than the center of the area source, (3) the release rate from each vent is approximately the same, and (4) no credit is taken for plume rise. The distance to the receptor is measured from the closest point on the perimeter of the assumed area source. For assumed areas that are not circular, the area width is measured perpendicular to the line of sight from the center of the assumed source to the control room intake. The initial diffusion coefficient sigma Yo is found by Equation 3; sigma Z_o is assumed to be 0.0. * The degree of significance will depend on the radius or width of the assumed area and the proximity of the vent cluster to the control room intake. As the radius decreases or the distance from the cluster to the control room intake increases, the less significance the position of any one vent has.	Conforms	Where this is used, the vents are in close arrangement and no credit is taken for plume rise. Distances and diffusion coefficients are determined per RG 1.194.

Table H: Conformance with Regulatory Guide 1.194 (Diffuse Area Source Guidance)			
RG Section	**RG Position**	**PINGP Analysis**	**Comments**
3.2.4.8	A third possible application of the diffuse area source model is determining a X/Q value for large louvered panels or large openings (e.g., railway doors on BWR Mark I plants) on vertical walls. This treatment would be appropriate for a louvered panel or opening when (1) the release rate from the building interior is essentially equally dispersed over the entire surface of the panel or opening and (2) assumptions of mixing, dilution, and transport within the building necessary to meet condition 1 are supported by the interior building arrangement. The staff has traditionally not allowed credit for mixing and holdup in turbine buildings because of the buoyant nature of steam releases and the typical presence of high volume roof exhaust ventilators. The distance to the receptor and the release height is measured from the center of the louvered panel or opening. Initial diffusion coefficients are found using Equations 3 and 4 assuming the width and height is that of the panel or opening rather than that of the building. If the area source and the intake are on the same building surface such that wind flows along the building surface would transport the release to the intake, the initial dispersion coefficient will need to be adjusted. If the included angle between the source-receptor line of sight and the vertical axis of the assumed source is less than 45 degrees, sigma Y_o should be set to 0.0. If the included angle between the source receptor line of sight and the horizontal axis of the assumed source is less than 45 degrees, sigma Z_o should be set to 0.0.	Conforms	For the CAAB source release, the included angle between the line of sight and the vertical axis is less than 45 degrees. Thus, sigma Z_o is set to 0.0.

Attachment 5
Regulatory Issue Summary (RIS) 2006-04
Experience with Implementation of Alternative Source Terms

RIS 2006-04 ISSUE	ADDRESSED BY
1. Level of Detail Contained in LARs An AST amendment request should describe the licensee's analyses of the radiological and non-radiological impacts and provide a justification for the proposed modification in sufficient detail to support review by the NRC staff. For example, the AST amendment request should (1) provide justification for each individual proposed change to the technical specifications (TS), (2) identify and justify each change to the licensing basis accident analyses, and (3) contain enough details (e.g., assumptions, computer analyses input and output) to allow the NRC staff to confirm the dose analyses results in independent calculations.	Section 3.0 of the license amendment provides sufficient details to accommodate the stated purposes. In addition, the AST calculations are included with the license submittal to further facilitate NRC understanding. (1) Justification for each individual proposed change to the technical specifications (TS) is included in the submittal. (2) Each change to the licensing basis accident analyses is identified and justified in the submittal. (3) The submittal contains details regarding assumptions, computer analyses input and output that will allow the NRC staff to confirm the dose analyses results in independent calculations.
2. Main Steam Isolation Valve (MSIV) Leakage and Fission Product Deposition in Piping For calculation of aerosol settling velocity in the main steamline (MSL) piping of boiling water reactors, some LARs reference Accident Evaluation Report (AEB) 98-03, "Assessment of Radiological Consequences for the Perry Pilot Plant Application Using the Revised (NUREG-1465) Source Term." This is acceptable. However, it is important to note that the report was written based on the parameters of a particular plant and, therefore, the removal rate constant is specific to that plant. Any licensee who chooses to reference these AEB 98-03 assumptions should provide appropriate justification that the assumptions are applicable to their particular design.	This item is applicable to BWRs. The PINGP is a Westinghouse PWR; therefore this item is not applicable to the PINGP.
3. Control Room Habitability When implementing an AST, some licensees have proposed that certain engineered safety features (ESF) ventilation systems not be credited as a mitigation feature in response to an accident. In some cases, the licensee's revised design basis analysis introduced the assumption that normal (non-ESF) ventilation systems are operating during all or part of an accident scenario. Such an assumption is inappropriate unless the non-ESF system meets certain qualities, attributes, and performance criteria as described in RG 1.183, Regulatory Positions 4.2.4 and 5.1.2. For example, credit for the operation of non-ESF ventilation	The AST analyses for control room habitability credit the following ventilation systems: • Shield Building Ventilation System • Auxiliary Building Special Ventilation System • Control Room Ventilation System All of these systems are safety related, have operability requirements in Technical Specifications and are powered by emergency power sources. The exception to the above is the dampers that

systems should not be assumed unless they have a source of emergency power. In addition, the operation of ventilation systems establishes certain building or area pressures based upon their flowrates. These pressures affect leakage and infiltration rates which ultimately affect operator dose. Therefore, to credit the use of these systems, licensees should incorporate the systems into the ventilation filter testing program in Section 5 of the TS. In summary, use of non-ESF ventilation systems during a DBA should not be assumed unless the systems have emergency power and are part of the ventilation filter testing program in Section 5 of the TS.	close to isolate the Auxiliary Building Special Ventilation Zone (ABSVZ) in response to a SI signal. These dampers are not classified as safety related. However, the dampers do satisfy the following: • Each damper receives redundant safety related isolation signals. • The dampers fail to the closed position (position required to isolate the ABSVZ). Electrical power is not required for the damper to move to, or maintain, the required closed position. • The dampers are controlled by Technical Specifications, such that if a damper were not able to perform the required function, the boundary would be considered inoperable. • The dampers are tested quarterly as part of established Surveillance Procedures to ensure that the required function can be satisfied.
Generic Letter (GL) 2003-01, "Control Room Habitability" requested licensees to confirm the ability of their facility's control room to meet applicable habitability regulatory requirements. In addition, licensees were requested to confirm that control room habitability systems were designed, constructed, configured, operated and maintained in accordance with the facility's design and licensing bases. The GL placed emphasis on licensees confirming that the most limiting unfiltered inleakage into the control room envelope (CRE) was not greater than the value assumed in the DBA analyses.	The AST analyses use a minimum unfiltered inleakage value of 240 cfm plus an additional 10 cfm for ingress and egress. The 240 cfm provides margin above the actual values during tracer gas testing. As demonstrated in the design analyses, the PINGP control room remains habitable in accordance with applicable regulatory requirements.
4. Atmospheric Dispersion Licensees may continue to use atmospheric relative concentration (χ/Q) values and methodologies from their existing licensing-basis analyses when appropriate. Licensees also have the option to adopt the generally less conservative (more realistic) updated NRC staff guidance on determining χ/Q values in support of design basis control room radiological habitability assessments provided in RG 1.194, "Atmospheric Relative Concentrations for Control Room Radiological Habitability Assessments at Nuclear Power Plants." Regulatory positions on χ/Q values for offsite (i.e., exclusion area boundary and low population zone) accident radiological consequence assessments are provided in RG 1.145, "Atmospheric Dispersion Models for Potential Accident Consequence Assessments at Nuclear Power Plants" Based on submittal reviews, the NRC staff identified the following areas of improvement for licensee submittals that propose revision of the design basis atmospheric dispersion analyses for implementing AST. They should include the following information: • A site plan showing true North and indicating locations of all potential accident release	For the Exclusion Area and Low Population Zone off-site dose analyses, the X/Q values previously accepted by the NRC staff and documented USAR Appendix H are being used. The EAB X/Q value in USAR, Appendix H, is a 0 to 8 hour value and is consistent with the plant licensing basis. As concluded in the NRC SER for PINGP license amendment 166 [Unit 1] and 156 [Unit 2] (dated September 10, 2004) it is acceptable to use the 0 to 8 hour EAB X/Q value for the 0 to 2 hour time period. For the Control Room and TSC, new X/Q values have been determined using ARCON96 following the guidance in RG 1.194. The determination of the Control Room X/Q values will be included in the AST license amendment. The following are included with, or in support of, the license amendment request: • Figure showing true north and locations of releases, control room intake and unfiltered

pathways and control room intake and unfiltered inleakage pathways (whether assumed or identified during inleakage testing). • Justification for using control room intake χ/Q values for modeling the unfiltered inleakage, if applicable. • A copy of the meteorological data inputs and program outputs along with a discussion of assumptions and potential deviations from staff guidelines. Meteorological data input files should be checked to ensure quality (e.g., compared against historical or other data and against the raw data to ensure that the electronic file has been properly formatted, any unit conversions are correct, and invalid data are properly identified).	inleakage pathways • Justification for control room χ/Q values • Meteorological data, properly formatted and converted, and ARCON96 inputs and outputs. (Meteorological data was submitted to the NRC by letter dated January 20, 2004 (ADAMS #ML040270067)
5. Modeling ESF Leakage ESF systems that recirculate sump water outside the primary containment may leak during their intended operation. This release source includes leakage through valve packing glands, pump shaft seals, flanged connections, and other similar components. This release source may also include leakage through valves isolating interfacing systems (e.g., refueling water storage tank). Appendix A to RG 1.183, Regulatory Position 5, states that "the radiological consequences from the postulated [ESF] leakage should be analyzed and combined with consequences postulated for other fission product release paths to determine the total calculated radiological consequences from the [loss-of-coolant accident] LOCA." In Appendix A to RG 1.183, Regulatory Position 5.5, the NRC staff provided a conservative value of 10 percent as the assumed amount of iodine that may become airborne from ESF leakage that is less than 212 °F. The NRC staff structured this regulatory position to be deterministic and conservative. The 10 percent value also compensates for the lack of research concerning iodine speciation beyond the containment and the uncertainties of applying laboratory data to the post-accident environment of the plant. Regulatory Position 5.5 states that a smaller flash fraction could be justified. Some licensees have referenced NUREG/CR-5950, "Iodine Evolution and pH Control" to justify a smaller flash fraction. However, NUREG/CR-5950 was developed for very specific laboratory conditions and the results have a degree of uncertainty. The mechanism for release of the fluid is also uncertain. Leaked fluid may spray onto surfaces and evaporate, or be sprayed in fine droplets into the air. A value of less than 10 percent can be justified by including considerations for plant-specific variables, including the post-accident environment (e.g.,	Leakage from ESF systems used during post-LOCA recirculation is included in the dose analysis. The postulated ESF leakage is combined with consequences postulated for other fission product release paths to determine the total radiological consequences from the accident. Two different leakage paths are considered in the analysis. • One leakage path is from the ESF system to the Auxiliary Building. The total recirculation leakage from this path included in the PINGP dose analysis is 4 gph; twice the maximum allowed per the applicable surveillance procedures. • A second leakage path is to the RWST. Potential Leak paths to the RWST are via the RHR pump suction isolation valve, SI pump suction isolation valve and SI pump mini-flow isolation valve. Of these, leakage through the RHR pump suction isolation valve from the RWST is limiting and is modeled in the analysis. The leakage value used for this path is 10 gph (twice the allowable valve leakage rate). Flash fractions less than 10% are used in the post-LOCA dose analyses. The justification for the reduced flash fractions is provided in Attachment 6, and is discussed in the license submittal Section 3.0.

impurities in the water or the presence of organic substances) and the uncertainties in the application of research situations to plant environments.	
6. Release Pathways Changes to the plant configuration associated with an LAR (e.g., an "open" containment during refueling) may require a re-analysis of the design basis dose calculations. A request for TS modifications allowing containment penetrations (i.e., personnel air lock, equipment hatch) to be open during refueling cannot rely on the current dose analysis if this analysis has not already considered these release pathways. RG 1.194, Regulatory Position 3.2.4.2 supports review of penetration pathways, by stating that "leakage is more likely to occur at a penetration, [and that the] analysts must consider the potential impact of leakage from building penetrations exposed to the environment." Therefore, releases from personnel air locks and equipment hatches exposed to the environment and containment purge releases prior to containment isolation need to be addressed. Some licensees have identified unique release pathways that had not been previously considered. For example, a recent submittal noted that containment hatches and containment plugs may be removed during refueling. The removal of these barriers creates new release pathways. Licensees are responsible for identifying all release pathways and for considering these pathways in their AST analyses, consistent with any proposed modification.	The AST dose analyses are determined based on the limiting release points for determining dose to the control room operators. Potential release pathways for the fuel handling accident are addressed conservatively in the calculation and the previous selective AST implementation license amendment, considering potential "open" containment pathways. 100% of the leakage is assumed to be released through the most limiting release pathway.
7. Primary to Secondary Leakage Some analysis parameters can be affected by density changes that occur in the process steam. The NRC staff continues to find errors in LAR submittals concerning the modeling of primary to secondary leakage during a postulated accident. This issue is discussed in Information Notice (IN) 88-31, "Steam Generator Tube Rupture Analysis Deficiency," and Item 3.f in RIS 2001-19. An acceptable methodology for modeling this leakage is provided in Appendix F to RG 1.183, Regulatory Position 5.2.	This issue is directly applicable to the SG tube alternate repair criteria. Similar to the current Technical Specification, the correlation will be based on water at 70°F. The volumetric measurement will continue to be used, but caution will be exercised to ensure that conversions are correctly applied. Ensuring that these types of errors are avoided is addressed as part of RG 1.183, Appendices E, F, G, and H.
8. Elemental Iodine Decontamination Factor (DF) Appendix B to RG 1.183 provides assumptions for evaluating the radiological consequences of a fuel handling accident. If the water depth above the damaged fuel is 23 feet or greater, Regulatory Position 2 states that "the decontamination factors	The analysis for the fuel handling accident uses a DF for elemental iodine of 285 in lieu of the 500 indicated in RG 1.183, Appendix B, Section 2. As indicated in this RIS item the value of 285 is the appropriate value to be used.

for the elemental and organic [iodine] species are 500 and 1, respectively, giving an overall effective decontamination factor of 200." However, an overall DF of 200 is achieved when the DF for elemental iodine is 285, not 500.	
9. Isotopes Used in Dose Assessments For some accidents (e.g., main steamline break and rod drop), licensees have excluded noble gas and cesium isotopes from the dose assessment. The inclusion of these isotopes should be addressed in the dose assessments for AST implementation.	The AST analyses consider the radionuclides in RG 1.183, Section 3.4, Table 5. Noble gases and cesiums are considered where warranted. The bases for not including cesium isotopes in selected accidents is summarized in the license submittal Section 3.0.
10. Definition of Dose Equivalent I-131 In the conversion to an AST, licensees have proposed a modification to the TS definition of dose equivalent I-131. Some have modified the definition to base it upon the thyroid dose conversion factors of International Commission on Radiation Protection (ICRP) Publication 2, "Report of Committee II on Permissible Dose for Internal Radiation" or ICRP Publication 30, "Limits for Intakes of Radionuclides by Workers." Others have proposed a definition which is a combination of different iodine dose conversion factors, (e.g., RG 1.109, Revision 1, "Calculation of Annual Doses to Man from Routine Releases of Reactor Effluents for the Purpose of Evaluating Compliance with 10 CFR [Part] 50, Appendix I," ICRP Publication 2, Federal Guidance Report 11, "Limiting Values of Radionuclide Intake and Air Concentration and Dose Conversion Factors for Inhalation, Submersion, and Ingestion." Although different references are available for dose conversion factors, the TS definition should be based on the same dose conversion factors that are used in the determination of the reactor coolant dose equivalent iodine curie content for the main steamline break and steam generator tube rupture accident analyses.	As part of the AST license submittal, a change is proposed to the PINGP Technical Specification definition of DE I-131. The AST analyses (secondary side accidents) appropriately apply the proposed definition of DE I-131 as described in the license submittal Section 3.0.
11. Acceptance Criteria for Off-Gas or Waste Gas System Release As part of full AST implementation, some licensees have included an accident involving a release from their off-gas or waste gas system. For this accident, they have proposed acceptance criteria of 500 millirem (mrem) total effective dose equivalent (TEDE). The acceptance criteria for this event is that associated with the dose to an individual member of the public as described in 10 CFR Part 20, "Standards for Protection Against Radiation." When	The analysis of release from the waste gas system is not included in the license submittal.

the NRC revised 10 CFR Part 20 to incorporate a TEDE dose, the offsite dose to an individual member of the public was changed from 500 mrem whole body to 100 mrem TEDE. Therefore, any licensee who chooses to implement AST for an off-gas or waste gas system release should base its acceptance criteria on 100 mrem TEDE. Licensees may also choose not to implement AST for this accident and continue with their existing analysis and acceptance criteria of 500 mrem whole body.	
12. Containment Spray Mixing Some plants with mechanical means for mixing containment air have assumed that the containment fans intake air solely from a sprayed area and discharge it solely to an unsprayed region or vice versa. Without additional analysis, test measurements or further justification, it should be assumed that the intake of air by containment ventilation systems is supplied proportionally to the sprayed and unsprayed volumes in containment.	No credit is taken for the removal of iodine by the containment spray system in the AST dose consequence analysis. As discussed in Attachment 6, and the license amendment request Section 3.0, containment is treated as a single volume.