Entergy

Entergy Operations, Inc.
17265 River Road
Killona, LA 70057-3093
Tel 504-739-6715
Fax 504-739-6698
rmurill@entergy.com

Robert J. Murillo
Licensing Manager
Waterford 3

W3F1-2009-0061

November 6, 2009

U.S. Nuclear Regulatory Commission
ATTN: Document Control Desk
Washington, DC 20555-0001

SUBJECT: Response to NRC Request for Additional Information Re: Waterford 3 Steam Electric Station, Unit 3 - Requests for Relief from ASME Section XI Volumetric Examination Requirements – Second 10-Year Inservice Inspection Interval
Waterford Steam Electric Station, Unit 3
Docket No. 50-382
License No. NPF-38

REFERENCES:

1. Entergy letter dated June 1, 2009 "Requests for Relief from ASME Section XI Volumetric Examination Requirements – Second 10-Year Interval" (W3F1-2009-0026) (ADAMS Accession No. ML091540088)

2. NRC letter dated July 23, 2009 "Waterford 3 Steam Electric Station, Unit 3 - Requests for Relief from ASME Section XI Volumetric Examination Requirements – Second 10-Year Inservice Inspection Interval (TAC Nos. ME1426, ME1427, ME1428, ME1429, ME1430, ME1431, ME1432, and ME1433) (ILN09-0069)

Dear Sir or Madam:

On July 23, 2009, Entergy received communication (Reference 2) from members of the NRC Staff requesting additional information associated with Entergy's relief requests from ASME Section XI Volumetric Examination Requirements – Second 10-Year Inservice Inspection Interval " (Reference 1).

Attachment 1 contains Entergy's response to the NRC request.

There are no new commitments contained in this letter.

A047
NRR

If you have any questions or require additional information, please contact me at 504-739-6715.

Sincerely,

RJM/RJP

Attachment:
1. Entergy's response to the NRC information request

cc: Mr. Elmo E. Collins, Jr.
Regional Administrator
U. S. Nuclear Regulatory Commission
Region IV
612 E. Lamar Blvd., Suite 400
Arlington, TX 76011-4125

NRC Senior Resident Inspector
Waterford Steam Electric Station Unit 3
P.O. Box 822
Killona, LA 70066-0751

U. S. Nuclear Regulatory Commission
Attn: Mr. N. Kalyanam
Mail Stop O-07D1
Washington, DC 20555-0001

Wise, Carter, Child & Caraway
ATTN: J. Smith
P.O. Box 651
Jackson, MS 39205

Louisiana Department of Environmental Quality
Office of Environmental Compliance
Surveillance Division
P. O. Box 4312
Baton Rouge, LA 70821-4312

American Nuclear Insurers
Attn: Library
95 Glastonbury Blvd.
Suite 300
Glastonbury, CT 06033-4443

Attachment 1
To
W3F1-2009-0061

Response to NRC Request for Additional Information Re:
Waterford 3 Steam Electric Station, Unit 3
Requests for Relief from ASME Section XI Volumetric Examination Requirements – Second 10-Year Inservice Inspection Interval

Response to Request for Additional Information

The requested information was as follows:

As requested below, please provide detailed and specific information to support the bases for limited examination in all requests for relief and, therefore, demonstrate impracticality:

a) Include descriptions (written and/or sketches, as necessary) of the interferences to applied nondestructive examination (NDE) techniques.

b) As applicable, describe NDE equipment (ultrasonic scanning apparatus), details of the listed obstructions (size, shape, proximity to the weld, etc.) to demonstrate accessibility limitations, and discuss whether alternative methods or advanced technologies could be employed to maximize ASME Code coverage.

c) Fully clarify the wave modality and insonification angles used for all ultrasonic examinations.

d) Show cross-sectional coverage plots to describe ASME Code volumes.

e) If surface examination is required by the ASME Code in addition to the volumetric examination, state whether surface examinations were performed on any of the subject components and state examination coverage that was obtained.

f) If not included, state whether any indications were discovered as a result of Code-required examinations, and how these indications have been dispositioned.

The following pages, in the aggregate, provide the information requested above.

LIMITED B-A EXAMINATIONS				W3 Responses to NRC Request for Additional Information (RAI)					
ITEM NO.	COMP. No.	ITEM DESCRIPTION	% COVERAGE	a	b	c	d	e	f
B1.40	02-001	RPV Head to Flange	64%	Exam coverage limited by shroud, shroud support, and flange configuration. Scanned with 0°, 45°s, and 60°s, where accessible. Six inch wide lifting lugs every 30° around the circumference of the head. Shroud located 8" from the toe of the weld on the head side. Flange located 5 inches from the toe on the opposite side.	Manual UT exam. Pre-Appendix VIII See attachment 02-001 100% of the ASME Code Required Volume cannot be achieved due to the shroud support interference to UT scanning There were no alternative NDE methods or advanced technologies that could be practically employed to maximize ASME Code coverage.	Exam Angles: 0° L, 45°S, 60°S, See attachment 02-001	See attachment 02-001	MT - NRI.	UT- NRI
B1.22	02-002	RPV Head Peel Segment to Peel Segment weld at 90°	18%	Reactor head peel weld to peel weld runs from the circ weld 02-001 to the center of the reactor head. The reactor head shroud covers 81% of the weld and makes UT examination limited to the lowest 4" of the 22.1 total inches of weld because technicians cannot access the weld area. Examined 4" of the 22.1" total weld located at the 90° mark between flange bolt holes 1 & 2. Examination Coverage Profile showing the Code Required Volume (CRV), Obstructions to the exam area, UT exam angles used.	Manual UT exam. Pre-Appendix VIII 100% of the ASME Code Required Volume cannot be examined while the shroud is in place. No alternative NDE methods or advanced technologies could be practically employed to maximize ASME Code coverage. See attachment 02-002. Examination Coverage Profile showing the Code Required Volume (CRV), Obstructions to the exam area, UT exam angles used.	Exam Angles: 0° L, 45°S, 60°S, See attachment 02-002.	See attachment 02-002	No surface examination performed this interval.	NRI
B1.22	02-003	RPV Head Peel Segment to Peel Segment weld at 90°	18%	Reactor head peel weld to peel weld runs from the circ weld 02-001 to the center of the reactor head. The reactor head shroud covers 81% of the weld. UT examination is limited to the lowest 4" of the 22.1 total inches of weld because technicians cannot access the weld area. Examined 4" of the 22.1" total weld located at the 90° mark between flange bolt holes 1 & 2.	Manual UT exam. Pre-Appendix VIII 100% of the ASME Code Required Volume cannot be examined while the shroud is in place. No alternative NDE methods or advanced technologies could be practically employed to maximize ASME Code coverage without removing the shroud. See attachment 02-003	Exam Angles: 0° L, 45°S, 60°S, See attachment 02-003	See attachment 02-002	No surface examination performed this interval.	NRI

LIMITED B-D EXAMINATIONS				W3 Responses to NRC Request for Additional Information (RAI)					
ITEM NO.	COMP. No.	ITEM DESCRIPTION	% COVERAGE	a	b	c	d	e	f
B3.130.	03-010	42" Hot Leg Nozzle to SG #1	86.50%	Single side examination (for majority of weld volume), due to weld location adjacent to the nozzle transition. Scanning performed with 0°, 45°s and 60°s where accessible (including two directions for accessible portion of weld volume.	Manual UT exam 100% of the ASME Code Required Volume cannot be examined with high angle transition from pipe to nozzle. See Attachment 03-010 No alternative NDE methods or advanced technologies could be practically employed to examine the transition area.	Exam Angles: 0° L, 45°S, 60°S, See Attachment 03-010	See Attachment 03-010	No surface examination performed this interval.	NRI
B3.130	03-011 03-012	30" Cold leg to SG#1	66%	Exam coverage limited by nozzle and weld geometry configuration, due to transition of the nozzle adjacent to the weld toe. Scanned with 0°, 45°s and 60°s, where accessible.	Manual UT exam 100% of the ASME Code Required Volume cannot be examined with transition from shell to nozzle. No alternative NDE methods or advanced technologies could be practically employed to examine the transition area. See attachment 03-011	Exam Angles: 0° L, 45°S, 60°S, See attachment 03-011	See Attachment 03-011	No surface examination performed this interval	UT - NRI
B3.110	05-009	Pressurizer Surge Nozzle to Head Weld	64%	Exam coverage limited by nozzle to head configuration, due to transition of the nozzle adjacent to the weld toe. Scanned with 0°, 45°s and 60°s, where accessible.	Manual UT exam 100% of the ASME Code Required Volume cannot be achieved with the nozzle to head configuration. No alternative NDE methods or advanced technologies could be practically employed to examine the transition area. See attachment 05-009. Examination Coverage Profile showing the Code Required Volume (CRV), and the transition area that prevents limits the UT exam coverage.	Exam Angles: 0° L, 45°S, 60°S, See attachment 05-009.	See Attachment 05-009	No surface exam this interval.	UT - NRI
B3.110	05-010	Pressurizer Spray Nozzle to Head Weld	74.80%	Exam coverage limited by nozzle to head configuration, due to transition of the nozzle adjacent to the weld toe. Scanned with 0°, 45°s and 60°s, where accessible.	Manual UT exam 100% of the ASME Code Required Volume cannot be achieved with the nozzle to head configuration. No alternative NDE methods or advanced technologies could be practically employed to examine the transition area. See attachment 05-010. Examination Coverage Profile showing the Code Required Volume (CRV), and the transition area that prevents limits the UT exam coverage.	Exam Angles: 0° L, 45°S, 60°S, See attachment 05-010.	See Attachment 05-010	No surface exam this interval.	UT-NRI
B3.110	05-011	Pressurizer Safety Nozzle to Head Weld	65.90%	Exam coverage limited due to nozzle to head configuration, due to transition of the nozzle adjacent to the weld toe. Exam also limited due to head to shell transition area. This obstructed the 45° axial scan for 13" and the 60° axial scan for 20".	Manual UT exam 100% of the ASME Code Required Volume cannot be achieved with the nozzle to head configuration. No alternative NDE methods or advanced technologies could be practically employed to examine the transition area. See attachment 05-011. Examination Coverage Profile showing the Code Required Volume (CRV), and the transition area that prevents limits the UT exam coverage.	Exam Angles: 0° L, 45°S, 60°S, See Attachment 05-011	See Attachment 05-011	No surface exam this interval.	UT-NRI

LIMITED B-D EXAMINATIONS				W3 Responses to NRC Request for Additional Information (RAI)					
ITEM NO.	COMP. No.	ITEM DESCRIPTION	% COVERAGE	a	b	c	d	e	f
B3.110	05-012	Pressurizer Safety Nozzle to Head Weld	65.90%	Exam coverage limited due to nozzle to head configuration, due to transition of the nozzle adjacent to the weld toe. Exam also limited due to head to shell transition area. This obstructed the 45° axial scan for 13" and the 60° axial scan for 20".	Manual UT exam 100% of the ASME Code Required Volume cannot be achieved with the nozzle to head configuration. No alternative NDE methods or advanced technologies could be practically employed to examine the transition area. See attachment 05-012. Examination Coverage Profile showing the Code Required Volume (CRV), and the transition area that prevents limits the UT exam coverage.	Exam Angles: 0° L, 45°S, 60°S, See attachment 05-012.	See Attachment 05-011	No surface exam this interval.	UT-NRI
B3.110	05-013	Pressurizer Safety Nozzle to Head Weld	65.90%	Exam coverage limited due to nozzle to head configuration, due to transition of the nozzle adjacent to the weld toe. Exam also limited due to head to shell transition area. This obstructed the 45° axial scan for 13" and the 60° axial scan for 20".	Manual UT exam 100% of the ASME Code Required Volume cannot be achieved with the nozzle to head configuration. No alternative NDE methods or advanced technologies could be practically employed to examine the transition area. See attachment 05-013. Examination Coverage Profile showing the Code Required Volume (CRV), and the transition area that prevents limits the UT exam coverage.	Exam Angles: 0° L, 45°S, 60° S See Attachment 05-013	See Attachment 05-011	No surface exam this interval.	UT-NRI
B3.120	05-014	Pressurizer Surge Nozzle Inner Radius	29.40%	Scanning limited by nozzle to head transition configuration. Scanning performed with 60°s and 70°s, where accessible.	Manual UT exam 100% of the ASME Code Required Volume cannot be achieved with the nozzle to head configuration. No alternative NDE methods or advanced technologies could be practically employed to examine the transition area. See attachment 05-014. Examination Coverage Profile showing the Code Required Volume (CRV), and the transition area that prevents limits the UT exam coverage.	Exam Angles: 60°S 70° S used tangentially in CW and CCW See Attachment 05-014	See Attachment 05-014	No surface exam this interval.	UT-NRI
B3.120	05-015	Pressurizer Spray Nozzle Inner Radius	60.40%	Scanning limited by nozzle to head transition configuration. Scanning performed with 60°s and 70°s, where accessible.	Manual UT exam 100% of the ASME Code Required Volume cannot be achieved with the nozzle to head configuration. No alternative NDE methods or advanced technologies could be practically employed to examine the transition area. See attachment 05-015. Examination Coverage Profile showing the Code Required Volume (CRV), and the transition area that prevents limits the UT exam coverage.	Exam Angles: 60° S, 70° S used tangentially in CW and CCW. See attachment 05-015.	See Attachment 05-015	No surface exam this interval.	UT-NRI
B3.120	05-016 05-017 05-018	Pressurizer Safety Nozzle Inner Radius	72%	Scanning limited by nozzle to head transition configuration. Scanning performed with 60°s and 70°s, where accessible.	Manual UT exam 100% of the ASME Code Required Volume cannot be achieved with the nozzle to head configuration. No alternative NDE methods or advanced technologies could be practically employed to examine the transition area. See attachment 05-016. Examination Coverage Profile showing the Code Required Volume (CRV), and the transition area that prevents limits the UT exam coverage for welds 05-016, 05-017, 05-018.	Exam Angles: 60°S, 70° S used tangentially in CW and CCW See attachment 05-016.	See Attachment 05-016	No surface exam this interval.	UT-NRI

LIMITED B-F EXAMINATIONS				W3 Responses to NRC Request for Additional Information (RAI)					
ITEM NO.	COMP. No.	ITEM DESCRIPTION	% COVERAGE	a	b	c	d	e	f
B5.40	26-006	PZR Nozzle to 8" x 6" Reducing Safe end Weld	63%	Scanning limited on reducer side due to OD taper near the weld toe. 45°s, 45°RL and 60°RL used for scanning, where accessible. NOTE: Per MRP-139 Inspection, 26-006 had a full structural weld overlay installed in RFO-15.	Manual UT exam 100% of the ASME Code Required Volume cannot be achieved with the nozzle to reducing safe end OD configuration. No alternative NDE methods or advanced technologies could be practically employed to examine the transition area. See attachment 26-006. Examination Coverage Profile showing the Code Required Volume (CRV), and the transition area that prevents limits the UT exam coverage.	Angles Used 45° RL, 60° RL See attachment 26-006.	See attachment 26-006.	No surface exam performed this interval.	UT - NRI
B5.40	26-001	Pressurizer Safety Nozzle to 8" x 6" Reducing Safe end Weld	70%	Scan coverage limited on the reducing safe end side, due to OD configuration. 45°s, 45°RL, and 60°RL used for scanning, where accessible. NOTE: Per MRP-139 Inspection, 26-001 had a full structural weld overlay installed in RFO-15.	Manual UT exam 100% of the ASME Code Required Volume cannot be achieved with the nozzle to head configuration. No alternative NDE methods or advanced technologies could be practically employed to examine the transition area. See attachment 26-001. Examination Coverage Profile showing the Code Required Volume (CRV), and the transition area that prevents limits the UT exam coverage.	Angles Used 45° RL, 60° RL See attachment 26-001.	See attachment 26-001.	No surface exam performed this interval.	UT - NRI

LIMITED B-J EXAMINATIONS				W3 Responses to NRC Request for Additional Information (RAI)					
ITEM NO.	COMP. No.	ITEM DESCRIPTION	% COVERAGE	a	b	c	d	e	f
B9.11	06-006	14" Shutdown Cooling Nozzle to Safe end Weld	86.50%	Scanning limited on nozzle side of weld due to nozzle transition.45° and 60° S, 40°, 45° and 60° RL used for scanning, where accessible. NOTE: Per MRP-139 Inspection, 26-001 had a full structural weld overlay installed in RFO-15.	Manual UT exam 100% of the ASME Code Required Volume cannot be achieved with the nozzle to safe end configuration. No alternative NDE methods or advanced technologies could be practically employed to examine this area. See attachment 06-006. Examination Coverage Profile showing the Code Required Volume (CRV) and nozzle transition.	Angles Used 45° & 60° S; 40° RL, 45° RL, 60 RL See attachment 06-006.	See attachment 06-006.	No surface exam performed this interval.	UT – NRI
B9.11	07-013	RCS 30" Elbow to 45° Elbow Weld	82.20%	Scanning obstructed for 17.8% of weld circumference due to adjacent permanent support structure. 45°s and 60°s used for scanning, where accessible.	Manual UT exam 100% of the ASME Code Required Volume cannot be achieved with the permanent support structure in place. No alternative NDE methods or advanced technologies could be practically employed to examine this area. See attachment 07-013. Examination Coverage Profile showing the Code Required Volume (CRV), and the transition area that prevents limits the UT exam coverage	Angles Used 0°L, 45°S & 60° S See attachment 07-013.	See attachment 07-013.	No surface exam performed this interval.	UT – NRI
B9.11	08-014	30" Pipe to Safe end Weld	71%	Scan coverage limited on safe end side of weld due to short safe end length and the adjacent pump configuration. 45°RL and 40°RL used for scanning, where applicable.	Manual UT exam. Pre-Appendix VIII 100% of the ASME Code Required Volume cannot be achieved on the pipe to safe end and safe end to pump welds as the design puts these 2 welds within a 7" span. OD mismatch of the cast pump nozzle, to cast safe end to rolled pipe with 2 long seams reduces coverage . No alternative NDE methods or advanced technologies could be practically employed to examine this area. See attachment 08-014. Examination Coverage Profile showing the Code Required Volume (CRV), and the OD contour preventing 100% UT exam coverage	Angles Used 40°RL, 45°RL See attachment 08-014	See attachment 08-014.	No surface exam performed this interval.	UT – NRI
B9.11	09-002	SG Nozzle Ext. Piece to 30" Elbow Ext. Piece Weld	87%	Scanning limited on elbow side of weld due to elbow OD configuration, limiting the amount of elbow side coverage. 45°S and 60°S used for scanning, where accessible.	Manual UT exam 100% of the ASME Code Required Volume cannot be achieved due to the OD configuration of the 30"elbow to elbow extension weld and the short elbow extension. No alternative NDE methods or advanced technologies could be practically employed to examine this area. See attachment 09-002. Examination Coverage Profile showing the Code Required Volume (CRV), and the OD contour preventing 100% UT exam coverage	Angles Used 45°S, 60°S See attachment 09-002	See attachment 09-002.	MT - NRI	UT – NRI
B9.11	09-005	45° Elbow to 30" Elbow Weld	85%	Scanning limited on elbow side of weld for 17" of circumference due to adjacent permanent support. Scanning performed across weld from pipe side, but no second direction in obstructed area due to ID cladding, which precludes bouncing sound. 45°S used for scanning, where accessible.	Manual UT exam 100% of the ASME Code Required Volume cannot be achieved due to a permanent support preventing access to 17" of the weld. No alternative NDE methods or advanced technologies could be practically employed to examine this area. See attachment 09-005. Examination Coverage Profile showing the Code Required Volume (CRV) and the OD contour preventing 100% UT exam coverage.	Angle Used 45°S See attachment 09-005	See attachment 09-005.	MT - NRI	UT – NRI

LIMITED B-J EXAMINATIONS				W3 Responses to NRC Request for Additional Information (RAI)					
ITEM NO.	COMP. No.	ITEM DESCRIPTION	% COVERAGE	a	b	c	d	e	f
B9.11	09-016	30" Elbow to Safe end Weld (RCP 1B Inlet)	52.50%	Scanning limited on safe end side of weld due to the width and shape of safe end. 45°S and 60°S, and 45°, 60° and 70° RL used for scanning, where accessible.	Manual UT exam 100% of the ASME Code Required Volume cannot be achieved on the elbow to safe end OD mismatch of the cast safe end to rolled/welded elbow with 2 long seams reduces coverage. No alternative NDE methods or advanced technologies could be practically employed to examine this area. See attachment 09-016. Examination Coverage Profile showing the Code Required Volume (CRV), and the OD contour preventing 100% UT exam coverage	Angles used: 45°S, 60°S, 45°RL, 60°RL,70°RL See attachment 09-016.	See attachment 09-016.	No surface exam performed this interval.	UT – NRI
B9.11	09-017	30" Safe end to RCP 1B Weld	17.50%	Scanning limited on safe end side of weld due to the width and shape of safe end. Scanning on Pump side is considered "best effort" due to cast stainless steel material. 1.9% of safe end side was also obstructed by a 1" diameter nozzle. 45° RL used for scanning, where accessible.	Manual UT exam 100% of the ASME Code Required Volume cannot be achieved on the safe end due to width and shape of the safe end and a 1" nozzle in exam area. UT of cast stainless material is a "best effort" exam. No alternative NDE methods or advanced technologies could be practically employed to examine this area. See attachment 09-017. Examination Coverage Profile shows the Code Required Volume (CRV) for both 09-016 and 09-017 welds , and the OD contour preventing 100% UT exam coverage.	Angles used: 0°L, 45°RL. See attachment 09-017.	See attachment 09-016.	PT - NRI.	UT – NRI
B9.11	10-001	RCP 1B to 30" Safe end Weld	18%	Scanning limited on safe end side of weld due to the width and shape of safe end. Scanning on Nozzle side limited by nozzle transition. 45° RL used for scanning, where accessible.	Manual UT exam 100% of the ASME Code Required Volume cannot be achieved on the safe end due to width and shape of the safe end. Scanning on the nozzle side was limited due to the transition. No alternative NDE methods or advanced technologies could be practically employed to examine this area. See attachment 10-001. Examination Coverage Profile shows the Code Required Volume (CRV) for weld 10-001 and the limitations.	Angles used: 45°RL, 40°RL. See attachment 10-001.	See attachment 10-001.	PT - NRI.	UT – NRI
B9.11	10-002	Safe end to 30" Pipe Weld (RCP 1B Outlet)	44.20%	Scanning limited on safe end side due to width and shape of safe end. Pipe side scanning limited by adjacent nozzle for 6.75" of 116" of circumference. 45° and 60° RL used for scanning, where accessible.	Manual UT exam 100% of the ASME Code Required Volume cannot be achieved on the safe end due to width and shape of the safe end. Scanning on the pipe side was limited due to nozzle (weld 10-005) in scan area. No alternative NDE methods or advanced technologies could be practically employed to examine this area. See attachment 10-002. Examination Coverage Profile shows the Code Required Volume (CRV) for weld 10-002.	Angles used: 40°RL, 45°RL,60°RL 45°S See attachment 10-002.	See attachment 10-002.	PT - NRI.	UT – NRI
B9.11	13-001	SG#2 30" Nozzle to Nozzle Extension Weld	62.60%	Scanning limited to Nozzle Extension side only, due to Nozzle OD configuration. Additionally, Nozzle Extension side scanning was limited due to adjacent weld no. 13-002, resulting in approximately only 50% coverage of the required volume from the Nozzle Extension side, in the axial scan direction. Circumferential coverage was unobstructed. 45° and 60° S used for scanning, where accessible.	Manual UT exam 100% of the ASME Code Required Volume cannot be achieved as scanning is limited to the nozzle extension side of the weld. The proximity of weld 13-002 to 13-001 reduces axial scanning to 50%. No alternative NDE methods or advanced technologies could be practically employed to examine this area. See attachment 13-001. Examination Coverage Profile shows the Code Required Volume (CRV) for weld 13-001 and proximity of weld 13-002.	Angles used: 0°L, 45°S, 60°S See attachment 13-001.	See attachment 13-001.	MT - NRI.	UT – NRI

LIMITED B-J EXAMINATIONS				W3 Responses to NRC Request for Additional Information (RAI)					
ITEM NO.	COMP. No.	ITEM DESCRIPTION	% COVERAGE	a	b	c	d	e	f
B9.11	17-033	12" Pipe to Reducer Weld	57%	Examination limited on reducer side due to taper configuration 0.8" from weld toe. Scanning performed with 45°s and 70°RL, where accessible.	Manual UT exam 100% of the ASME Code Required Volume cannot be achieved due to the taper (un-parallel surfaces) on the reducer side. No alternative NDE methods or advanced technologies could be practically employed to examine this area. See attachment 17-033. Examination Coverage Profile shows the Code Required Volume (CRV) and the taper that limits the UT scanning.	Angles used: 60°RL, 70°RL See attachment 17-033.	See attachment 17-033.	No surface exam performed this interval.	UT – NRI
B9.11	19-006, 19-008	12" Pipe to Valve Weld	50%	Scanning limited to pipe side only, due to valve OD configuration. 45°S and 60°RL used for scanning where accessible.	Manual UT exam 100% of the ASME Code Required Volume cannot be achieved due valve OD configuration prevents scanning. No alternative NDE methods or advanced technologies could be practically employed to examine this area. See attachment 19-006. Examination Coverage Profile shows the Code Required Volume (CRV) and the contour that limits the UT exam.	Angle used: 45°S, 60°RL. See attachment 19-006.	See attachments 19-006 and 19-008.	No surface exam performed this interval.	UT – NRI
B9.11	21-066	14" Pipe to Valve Weld	50%	Single sided examination due to valve configuration. 45-70°s, and 70°RL used for scanning, where accessible.	Manual UT exam 100% of the ASME Code Required Volume cannot be achieved due to single side access typical in all pipe to valve configurations. No alternative NDE methods or advanced technologies could be practically employed to examine this area. See attachment 21-066. Examination Coverage Profile shows the Code Required Volume (CRV) and sigle side access limitation.	Angle used: 45°S, 60°S . 70°S, 70°RL See attachment 21-066.	See attachment 21-066.	PT - NRI.	UT – NRI
B9.11	22-023	Elbow to 14" Pipe Weld	88%	10" of downstream side of the weld, near the intrados of the elbow, was not accessible due to penetration hole. 45° and 60° S used for scanning, where accessible.	Manual UT exam 100% of the ASME Code Required Volume cannot be achieved due to the penetration prevents scanning 10" of the weld on the elbow intrados. No alternative NDE methods or advanced technologies could be practically employed to examine this area. See attachment 22-023. Examination Coverage Profile shows the Code Required Volume (CRV).	Angle's Used: 45°S, 60°S See attachment 22-023.	See attachment 22-023.	PT - NRI.	UT – NRI
B9.11	25-009, 25-015	4" Pipe to 4" x 4" x 3" Tee Weld	75%	Scanning limited to 50% circumference on tee side due to branch connection radius. 45-70°s used for scanning, where accessible.	Manual UT exam 100% of the ASME Code Required Volume cannot be achieved due to the branch connection radius (un-parallel surfaces) on small diameter pipe. No alternative NDE methods or advanced technologies could be practically employed to examine this area. See attachment 25-009. Examination Coverage Profile shows the Code Required Volume (CRV) for welds 25-009 and 25-015 configurations.	Angle's Used: 45°S, 60°S, 70°S See attachment 25-009.	See attachment 25-009.	PT - NRI.	UT – NRI

LIMITED B-J EXAMINATIONS				W3 Responses to NRC Request for Additional Information (RAI)					
ITEM NO.	COMP. No.	ITEM DESCRIPTION	% COVERAGE	a	b	c	d	e	f
B9.11	25-016 25-018	4" Pipe to Valve end Weld	50%	Single sided examination due to valve configuration. 45-70°s used for scanning, where accessible.	Manual UT exam 100% of the ASME Code Required Volume cannot be achieved due to single side access typical in all pipe to valve configurations. No alternative NDE methods or advanced technologies could be practically employed to examine this area. See attachment 25-016. Examination Coverage Profile shows the Code Required Volume (CRV) and single side access limitations for 25-016 and 25-018.	Angle's Used: 45°S, 60°S, 70°S See attachment 25-016.	See attachment 25-016.	PT - NRI.	UT – NRI
B9.11	25-019, 25-020	4" Pipe to Elbow weld	75%	Scanning limited to 50% circumference on the elbow side due to the intrados radius. 45-70°s used for scanning, where accessible.	Manual UT exam 100% of the ASME Code Required Volume cannot be achieved due to elbow intrados radius typical in most small diameter pipe to fitting configurations. No alternative NDE methods or advanced technologies could be practically employed to examine this area. See attachment 25-019. Examination Coverage Profile shows the Code Required Volume (CRV) and the pipe to elbow profile for welds 25-019, and 25-020.	Angle's Used: 45°S, 60°S, 70°S See attachment 25-019.	See attachment 25-019.	PT - NRI.	UT – NRI
B9.11	25-022	Tee to 4" Branch Connection Weld	62%	Scanning limited to 12% on tee side due to the radius of the tee. 45-70°s used for scanning, where accessible.	Manual UT exam 100% of the ASME Code Required Volume cannot be achieved due to the short radius of the crotch of the Tee. Typical of all small diameter Tees, branch connections and elbows. No alternative NDE methods or advanced technologies could be practically employed to examine this area. See attachment 25-022. Examination Coverage Profile shows the Code Required Volume (CRV) and the pipe to elbow profile.	Angle's Used: 45°S, 60°S, 70° S See attachment 25-022.	See attachment 25-022.	PT - NRI.	UT – NRI
B9.11	26-002,	8" x 6" Reducing Safe-end to 6" Elbow Weld	50%	Scanning limited on both side of weld due to elbow to reducer OD configuration. 45-70°s used for scanning, where accessible.	Manual UT exam 100% of the ASME Code Required Volume cannot be achieved due to the non-parallel surfaces on the reducing safe end side of the weld. No alternative NDE methods or advanced technologies could be practically employed to examine this area. See attachment 26-002. Examination Coverage Profile shows the Code Required Volume (CRV) and the reducing safe end to elbow profile for welds 26-002 and 26-007.	Angle's Used: 45°S, 60°S, 70° S See attachment 26-002.	See attachment 26-002.	No surface exam this interval.	UT – NRI
B9.11	26-007	8" x 6" Reducing Safe-end to 6" Elbow Weld	52%	Scanning limited on both side of weld due to elbow to reducer OD configuration. 45-70°s used for scanning, where accessible.	Manual UT exam 100% of the ASME Code Required Volume cannot be achieved due to the non-parallel surfaces on the reducing safe end side of the weld. No alternative NDE methods or advanced technologies could be practically employed to examine this area. See attachment 26-002. Examination Coverage Profile shows the Code Required Volume (CRV) and the reducing safe end to elbow profile for welds 26-002 and 26-007.	Angle's Used: 45°S, 60°S, 70° S See attachment 26-002.	See attachment 26-007.	No surface exam this interval.	UT – NRI
B9.21	15-006	2" Drain Nozzle to Safe end Weld	85.50%	Examination limited on safe end side of weld due to adjacent safe end to pipe weld. 45°S, 60°RL and 70°RL used for scanning, where accessible. NOTE: Per MRP -139 Inspection, this weld has a full structural overlay installed in RFO-15.	Manual UT exam 100% of the ASME Code Required Volume cannot be achieved on the nozzle to safe end weld due to the proximity of the safe end to pipe weld. No alternative NDE methods or advanced technologies could be practically employed to examine this area. See attachment15-006. Examination Coverage Profile shows the Code Required Volume (CRV) and the proximity of the adjacent weld.	Angles used: 45°RL, 60°RL, 45°S, 60°S See attachment15-006.	See attachment15-006.	PT - NRI.	UT – NRI

LIMITED B-J EXAMINATIONS				W3 Responses to NRC Request for Additional Information (RAI)					
ITEM NO.	COMP. No.	ITEM DESCRIPTION	% COVERAGE	a	b	c	d	e	f
B9.21	27-002, 27-004, 27-005, 27-006, 27-007, 27-008, 27-009	2" Pipe to Elbow Weld	75%	Scanning limited to 50% circumference on the elbow side due to the intrados radius. 45, 60, 70°S and 70°RL used for scanning, where accessible.	Manual UT exam 100% of the ASME Code Required Volume cannot be achieved from the elbow side of the weld due to the small intrados radius of 2" elbows. No alternative NDE methods or advanced technologies could be practically employed to examine this area. See attachment 27-002. Examination Coverage Profile shows the Code Required Volume (CRV) and the 2" pipe to elbow intrados profiles which limit exam coverage and typical on this configuration for welds 27-002, 27-004, 27-005, 27-006, 27-007, 27-008, 27-009.	Angle's Used: 45°S, 60°S, 70° S, 70°RL See attachment 27-002.	See attachment 27-002.	PT - NRI.	UT – NRI
B9.21	27-010, 27-011, 27-038	2" Pipe to Elbow Weld	75%	Scanning limited to 50% circumference on the elbow side due to the intrados radius. 45, 60, 70°S and 70°RL used for scanning, where accessible.	Manual UT exam 100% of the ASME Code Required Volume cannot be achieved from the elbow side of the weld due to the small intrados radius of 2" elbows. No alternative NDE methods or advanced technologies could be practically employed to examine this area. See attachment 27-010. Examination Coverage Profile shows the Code Required Volume (CRV) and the 2" pipe to elbow intrados and extrados profiles typical on this configuration for welds 27-010, 27-011, 27-038.	Angle's Used: 45°S, 60°S, 70°S, 70°RL See attachment 27-010.	See attachment 27-010.	PT - NRI.	UT – NRI
B9.21	27-037	Tee to 2" Pipe Weld	62%	Scanning limited to 12% on tee side due to the radius of the tee. 45-70°s and 70°RL used for scanning, where accessible.	Manual UT exam 100% of the ASME Code Required Volume cannot be achieved from the Tee side of the weld due to the small intrados radius of 2" Tees. No alternative NDE methods or advanced technologies could be practically employed to examine this area. See attachment 27-037. Examination Coverage Profile shows the Code Required Volume (CRV) and the 2" Tee to pipe weld intrados profile typical on this configuration.	Angle's Used: 45°S, 60°S, 70°S, 70°RL See attachment 27-037.	See attachment 27-037.	PT - NRI.	UT – NRI
B9.21	27-054, 27-055	2" Pipe to Elbow Weld	75%	Scanning limited to 50% circumference on the elbow side due to the intrados radius. 45-70°s used for scanning, where accessible.	Manual UT exam 100% of the ASME Code Required Volume cannot be achieved from the elbow side of the weld due to the small intrados radius of 2" elbows. No alternative NDE methods or advanced technologies could be practically employed to examine this area. See attachment 27-054. Examination Coverage Profile shows the Code Required Volume (CRV) and the 2" pipe to elbow intrados and extrados profiles typical on this configuration for welds 27-054 and 27-055.	Angle's Used: 45°S, 60°S, 70° S See attachment 27-054.	See attachment 27-054	PT exam – no obstructions - NRI.	UT – NRI
B9.21	28-001, 28-002, 28-008, 28-009, 28-077, 28-078	2" Pipe to Elbow Weld	75%	Scanning limited to 50% circumference on the elbow side due to the intrados radius. 45-70°s used for scanning, where accessible.	Manual UT exam 100% of the ASME Code Required Volume cannot be achieved from the elbow side of the weld due to the small intrados radius of 2" elbows. No alternative NDE methods or advanced technologies could be practically employed to examine this area. See attachment 28-001. Examination Coverage Profile shows the Code Required Volume (CRV) and the 2" pipe to elbow intrados and extrados profiles typical on this configuration for welds 28-001, 28-002, 28-008, 28-009, 28-077,28-078.	Angle's Used: 45°S, 60°S, 70°S, See attachment 28-001.	See attachment 28-001.	PT - NRI.	UT – NRI

LIMITED B-J EXAMINATIONS				W3 Responses to NRC Request for Additional Information (RAI)					
ITEM NO.	COMP. No.	ITEM DESCRIPTION	% COVERAGE	a	b	c	d	e	f
B9.21	28-012	2" pipe to 2" x 2" x 2" Tee Weld	70%	Scanning limited to 50% circumference on tee side due to branch connection radius. Scanning limited to 90% on pipe side due to an adjacent clamp. 45-70°s used for scanning, where accessible.	Manual UT exam 100% of the ASME Code Required Volume cannot be achieved from the branch connection side of the weld due to the small intrados radius at the branch connection of 2" Tees. No alternative NDE methods or advanced technologies could be practically employed to examine this area. See attachment 28-012. Examination Coverage Profile shows the Code Required Volume (CRV) and the pipe clamp limitation. The 2" pipe to branch connection weld intrados profile is typical on this configuration.	Angle's Used: 45S°, 60°S, 70° S See attachment 28-012.	See attachment 28-012.	PT - NRI.	UT – NRI
B9.21	28-013, 28-074, 28-075	2" x 2" x 2" Tee to 2" Pipe Weld	76%	Scanning limited to 50% circumference on tee side due to branch connection radius. 45-70°s used for scanning, where accessible.	Manual UT exam 100% of the ASME Code Required Volume cannot be achieved from the Tee side of the weld due to the small intrados radius typical on branch connections of 2" Tees. No alternative NDE methods or advanced technologies could be practically employed to examine this area. See attachment 28-013. Examination Coverage Profile shows the Code Required Volume (CRV) and configuration for welds 28-013, 28-074, 28-075.	Angle's Used: 45S°, 60°S, 70° S See attachment 28-013.	See attachment 28-013.	PT - NRI.	UT – NRI
B9.21	28-016	2" x 2" x 2" Tee to 2" Branch Connection Weld	51%	Scanning limited to 12% on tee side due to the radius of the tee. Scanning limited to 90% on branch connection side due to an adjacent clamp. 45-70°s used for scanning, where accessible.	Manual UT exam 100% of the ASME Code Required Volume cannot be achieved from the Tee side of the weld due to the small intrados radius typical on branch connections of 2" Tees. No alternative NDE methods or advanced technologies could be practically employed to examine this area. See attachment 28-016. Examination Coverage Profile shows the Code Required Volume (CRV) and the 2" Tee to pipe weld intrados profile typical on this configuration.	Angle's Used: 45°S, 60°S, 70° S See attachment 28-016.	See attachment 28-016.	PT - NRI.	UT – NRI
B9.21	28-076	Tee to 2" Pipe Weld	62%	Scanning limited to 12% on tee side due to the radius of the tee. 45, 60, 70°S used for scanning, where accessible.	Manual UT exam 100% of the ASME Code Required Volume cannot be achieved from the Tee side of the weld due to the small intrados radius typical on branch connections of 2" Tees. No alternative NDE methods or advanced technologies could be practically employed to examine this area. See attachment 28-076. Examination Coverage Profile shows the Code Required Volume (CRV) and the intrados profile typical on this configuration.	Angle's Used: 45°S, 60°S, 70° S See attachment 28-076.	See attachment 28-076.	PT - NRI.	UT – NRI
B9.31	08-008	12" Safety Injection Nozzle to 30" Pipe Weld	50%	Scanning limited to 30" pipe side, due to nozzle OD configuration. ID clad prevents two directional coverage, via the bounce. 45° S used for scanning, where accessible.	Manual UT exam 100% of the ASME Code Required Volume cannot be achieved on nozzle side of weld using ¾ V path due to the cladding. No alternative NDE methods or advanced technologies could be practically employed to examine this area. See attachment 08-008. Examination Coverage Profile showing the Code Required Volume (CRV), and a profile of the downstream side of the exam area.	Angle Used: 45°S See attachment 08-008.	See attachment 08-008.	MT exam - NRI	UT – NRI

LIMITED C-A EXAMINATIONS				W3 Responses to NRC Request for Additional Information (RAI)					
ITEM NO.	COMP. No.	ITEM DESCRIPTION	% COVERAGE	a	b	c	d	e	f
C1.10	04-026	SG Intermediate Shell to Conical Shell Weld	56%	Scan obstruction caused by 4" wide insulation support ring located 2.3" from toe of weld, 360° around circumference, 45° and 60°s used for scanning, where accessible.	Manual UT exam 100% of the ASME Code Required Volume cannot be achieved from the lower side of the weld due to the insulation support ring located 2.3" from the weld toe. No alternative NDE methods or advanced technologies could be practically employed to examine this area. See attachment 04-026. Examination Coverage Profile shows a sketch of the insulation support ring and the proximity to the weld .	Angle's Used: 45°S, 60°S See attachment 04-026.	See attachment 04-026.	PT - NRI.	UT – NRI
C1.20	04-029	SG#2 Top Head Torus to Top Head Dome Weld	89%	Scanning limited for 11.3% of weld circumference, due to 14 insulation lugs located 3.5" from weld centerline every 36" around the circumference, 45°s and 60°s used for scanning, where accessible.	Manual UT exam 100% of the ASME Code Required Volume cannot be achieved due to the permanent welded insulation lugs in the scanning area. No alternative NDE methods or advanced technologies could be practically employed to examine this area. See attachment 04-029. Examination Coverage Profile shows a sketch of the insulation support lugs and the proximity to the weld .	Angle's Used: 45°S, 60°S See attachment 04-029.	See attachment 04-029.	No surface exam .	UT – NRI
C1.20	54-074	Shut Down Heat Exchanger Shell to Flange Weld	88%	Configuration of top and bottom nozzle saddle weld and the horizontal shell weld limit this exam.	Manual UT exam 100% of the ASME Code Required Volume cannot be achieved due to the short flange neck and the inlet and outlet nozzle reinforcement pads welded at 0° and 180° on the shell. No alternative NDE methods or advanced technologies could be practically employed to examine this area. See attachment 54-074. Examination Coverage Profile has pictures of the vessel and a sketch showing the scanning limitations.	Angle's Used: 45° S, 70° S See attachment 54-074.	See attachment 54-074.	No surface exam.	UT – NRI
C1.20	54-075	Shut Down Heat Exchanger Shell to Flange Weld	85%	Configuration of top and bottom nozzle saddle weld and the horizontal shell weld limt this exam.	Manual UT exam 100% of the ASME Code Required Volume cannot be achieved due to the short flange neck on the tube sheet flange and the inlet and outlet nozzle reinforcement pads welded at 0° and 180° to the shell. No alternative NDE methods or advanced technologies could be practically employed to examine this area. See attachment 54-075. Examination Coverage Profile has pictures of the Shut Down Heat Exchanger vessel and a sketch showing the scanning limitations.	Angle's Used: 45° S, 70° S See attachment 54-075.	See attachment 54-075.	No surface exam.	UT – NRI

LIMITED C-B EXAMINATIONS				W3 Responses to NRC Request for Additional Information (RAI)					
ITEM NO.	COMP. No.	ITEM DESCRIPTION	% COVERAGE	a	b	c	d	e	f
C2.21	04-030	SG#2 MS Nozzle to Top Head Dome Weld	86%	14% of circumference of weld partially limited due to 8 insulation lugs located 5.25" from the weld centerline every 24" around the circumference. 45°s and 60°s used for scanning, where accessible.	Manual UT exam 100% of the ASME Code Required Volume cannot be achieved due to the permanent (welded) insulation lugs in the scanning area. No alternative NDE methods or advanced technologies could be practically employed to examine this area. See attachment 04-030. Examination Coverage Profile shows a sketch of the insulation support lugs and the proximity to the weld .	Angle's Used: 45°S, 60°S See attachment 04-030.	See attachment 04-030.	No surface exam .	UT – NRI

LIMITED C-F-1 EXAMINATIONS				W3 Responses to NRC Request for Additional Information (RAI)					
ITEM NO.	COMP. No.	ITEM DESCRIPTION	% COVERAGE	a	b	c	d	e	f
C5.11	55-051	8" Pipe to Valve Weld	45.50%	Single sided exam due to valve configuration. Additional limitation on pipe side due to weld crown. 45°s, 60° and 70°RL used for scanning, where accessible.	Manual UT exam 100% of the ASME Code Required Volume cannot be achieved due to the exam is single sided (pipe side) due to the valve No alternative NDE methods or advanced technologies could be practically employed to examine this area. See attachment 55-051. Examination Coverage Profile shows a sketch of the angles used and the weld crown limitation.	Angle's Used: 45°S, 60°RL, 70RL See attachment 55-051.	See attachment 55-051.	PT - NRI.	UT – NRI
C5.11	64-001	Valve to 10" Pipe Weld	50%	Single sided exam due to valve configuration. Additional limitation on pipe side due to weld crown. 45°s, 60°s and 70°s used for scanning, where accessible (component is less than 0.50" in thickness).	Manual UT exam 100% of the ASME Code Required Volume cannot be achieved due to the contour / shape of the valve body and the weld crown on the pipe to valve configuration. No alternative NDE methods or advanced technologies could be practically employed to examine this area. See attachment 64-001. Examination Coverage Profile shows the contour of the pipe, weld and un-inspectable valve body.	Angle's Used: 45°S, 60°S, 70° S See attachment 64-001.	See attachment 64-001.	PT - NRI.	UT – NRI
C5.11	56-001	LPSI Valve to 10" Pipe Weld	50%	Scanning limited to pipe side only, due to valve OD configuration. 45°s, 60°s, and 70°s used for scanning, where accessible (pipe nominal thickness = 0.365").	Manual UT exam 100% of the ASME Code Required Volume cannot be achieved due to the valve to pipe configuration. No alternative NDE methods or advanced technologies could be practically employed to examine this area. See attachment 56-001 Examination Coverage Profile shows a sketch of the valve to pipe configuration.	Angle's Used: 45°S, 60°S 70° S See attachment 56-001	See attachment 56-001	PT - NRI.	UT – NRI
C5.11	56-002, 56-003, 56-005	LPSI 10" Pipe to Tee Weld	50%	Scanning limited to pipe side only, due to tee OD configuration. 45°s, 60°s, and 70°s used for scanning, where accessible (pipe nominal thickness = 0.365").	Manual UT exam 100% of the ASME Code Required Volume cannot be achieved due to the OD contour of the Tee (un-parallel surfaces). No alternative NDE methods or advanced technologies could be practically employed to examine this area. See attachment 56-002. Examination Coverage Profile shows typical OD contour of the Tee (un-parallel surfaces) that preclude 100% inspection of welds 56-002, 56-003, 56-005.	Angle's Used: 45°S, 60°S, 70° S See attachment 56-002.	See attachment 56-002.	PT - NRI.	UT – NRI
C5.11	61-071	14" x 8" Reducing Elbow to Flange Weld	50%	Scanning limited to elbow side only, due to flange OD configuration. 45°s, 60°s and 70° S used for scanning, where accessible. (Thickness is less than 0.50")	Manual UT exam 100% of the ASME Code Required Volume cannot be achieved due to the flange OD configuration preventing scanning this area. No alternative NDE methods or advanced technologies could be practically employed to examine this area. See attachment 61-071. Examination Coverage Profile shows the flange contour limitations.	Angle's Used: 45°S, 70°S See attachment 61-071.	See attachment 61-071.	No surface exam .	UT – NRI

LIMITED C-F-1 EXAMINATIONS				W3 Responses to NRC Request for Additional Information (RAI)					
ITEM NO.	COMP. No.	ITEM DESCRIPTION	% COVERAGE	a	b	c	d	e	f
C5.11	55-001	10" valve to stainless pipe weld	50%	Scanning limited to pipe side only, due to valve OD configuration. 45°s and 70°s used for scanning where accessible.	Manual UT exam 100% of the ASME Code Required Volume cannot be achieved due to valve body OD configuration. No alternative NDE methods or advanced technologies could be practically employed to examine this area. See attachment 55-001. Examination Coverage Profile shows the valve, weld, and pipe profile.	Angle's Used: 45°S, 60°S 70°S See attachment 55-001.	See attachment 55-001.	No surface exam .	UT – NRI
C5.11	54-043	10" Pipe to 10" x 6" Reducer Weld	50%	Scanning limited to pipe side due to reducer OD configuration. 45°s and 70°s used for scanning, where accessible (less than 0.5" thickness).	Manual UT exam 100% of the ASME Code Required Volume cannot be achieved on reducer side of weld due to the OD configuration. No alternative NDE methods or advanced technologies could be practically employed to examine this area. See attachment 54-043. Examination Coverage Profile shows the configuration of the pipe to reducer weld.	Angle's Used: 45° S, 60° RL, 70° S See attachment 54-043.	See attachment 54-043.	PT - NRI.	UT – NRI
C5.11	56-077	8" Pipe to Cont. Penetration Weld	50%	Scanning limited to pipe side only, due to OD configuration of penetration side. 45°s and 60°RL used for scanning, where accessible.	Manual UT exam 100% of the ASME Code Required Volume cannot be examined on the penetration side of the weld due to the OD contour No alternative NDE methods or advanced technologies could be practically employed to examine this area. See attachment 56-077. Examination Coverage Profile shows the weld OD contour and the exam coverage.	Angle's Used: 45°S, 60°RL See attachment 56-077.	See attachment 56-077.	PT - NRI.	UT – NRI
C5.11	52-004	14" Elbow to Tee Weld	50%	Scanning limited to elbow side only, due to tee OD configuration. 45°s, 60°s, 70°s, and 60°RL used for scanning, where accessible.	Manual UT exam 100% of the ASME Code Required Volume cannot be achieved from the Tee side due to the OD configuration. No alternative NDE methods or advanced technologies could be practically employed to examine this area. See attachment 52-004. Examination Coverage Profile shows the 14" elbow to Tee contour that limits the inspection to the pipe side only.	Angle's Used: 45°S, 60°S, 60RL, 70°S See attachment 52-004.	See attachment 52-004.	No surface exam .	UT – NRI
C5.21	60-131	4" Elbow to Tee	79%	Scanning limited due to Tee to pipe configuration, 6" total inches was not scanned due to interference.	Manual UT exam 100% of the ASME Code Required Volume cannot be achieved due to the OD contour (short radius crotch area) of the 4" Tee prevented scanning 6" of the weld. No alternative NDE methods or advanced technologies could be practically employed to examine this area. See attachment 60-131. Examination Coverage Profile shows the contour of the short radius 4" Tee that limited the exam area.	Angle's Used: 45°S, 60°S 70°S See attachment 60-131.	See attachment 60-131.	No surface exam .	UT – NRI

LIMITED C-F-1 EXAMINATIONS				W3 Responses to NRC Request for Additional Information (RAI)					
ITEM NO.	COMP. No.	ITEM DESCRIPTION	% COVERAGE	a	b	c	d	e	f
C5.21	60-468	3" Elbow to Pipe Weld	75%	Scanning limited to 50% circumference on the elbow side due to the intrados radius. 45-70°s used for scanning, where accessible.	Manual UT exam 100% of the ASME Code Required Volume cannot be achieved due to small radius intrados on 3" elbows. No alternative NDE methods or advanced technologies could be practically employed to examine this area. See attachment 60-468. Examination Coverage Profile depicts the small radius intrados on 3" elbows that limits the UT examination.	Angle's Used: 45°S, 60°S 70°S See attachment 60-468.	See attachment 60-468.	PT - NRI.	UT – NRI
C5.21	60-469	Pipe to Penetration Weld	50%	Single sided exam due to penetration configuration. 45-70°s used for scanning, where accessible.	Manual UT exam 100% of the ASME Code Required Volume cannot be achieved due to pipe to penetration configuration. No alternative NDE methods or advanced technologies could be practically employed to examine this area. See attachment 60-469. Examination Coverage Profile	Angles Used: 45°S, 60°S 70°S See attachment 60-469.	See attachment 60-469.	PT - NRI.	UT – NRI

LIMITED R-A EXAMINATIONS				W3 Responses to NRC Request for Additional Information (RAI)					
ITEM NO.	COMP. No.	ITEM DESCRIPTION	% COVERAGE	a	b	c	d	e	f
R1.20	06-007	Reactor Coolant 42" Elbow to Pipe weld	89%	Limited scan due to permanent Concrete saddle type support	Manual UT exam. 100% of the ASME Code Required Volume cannot be achieved due to the permanent support preventing access to 30" of the downstream scan area and 23" co of the o UT scan area. There were no alternative NDE methods or advanced technologies that could be practically employed to maximize ASME Code coverage. See attachment 06-007 for limitations	Exam Angles: 45°S, 60° S See attachment 06-007	See attachment 06-007	No surface exam this interval.	UT- NRI
R1.20	15-011	Reactor Coolant 42" Pipe to Elbow weld	84%	Limited up stream scan due to permanent Concrete saddle type support and down stream limitation due to Shutdown cooling nozzle and surge nozzle configuration	Manual UT exam. 100% of the ASME Code Required Volume cannot be achieved due to the permanent support preventing access to 30" of the upstream scan area and 2 nozzles (20" each) limiting the downstream scan. There were no alternative NDE methods or advanced technologies that could be practically employed to maximize ASME Code coverage. See attachment 15-011 for limitations	Exam Angles: 45°S, 60° S See attachment 15-011	See attachment 15-011	No surface exam this interval.	UT- NRI
R1.20	21-004	Elbow to 14" Stainless pipe weld	50%	Limited access, single side examination due to permanent concrete saddle type support	Manual UT exam. 100% of the ASME Code Required Volume cannot be achieved due to the pipe restraint immediately downstream of the weld. There were no alternative NDE methods or advanced technologies that could be practically employed to maximize ASME Code coverage. See attachment 21-004.	Exam Angles: 45°S, 60° S See attachment 21-004.	See attachment -21-004	No surface exam this interval.	UT- NRI

EXAMINATION COVERAGE PROFILE

Attachment #: 02-001	☐ ANO 1	☐ ANO 2	☐ GGNS	☐ RBS	■ W3

Component ID: 02-001 **Report No.:** 2000-406 **Material Type:** CS

Configuration: RPV Head to Flange **Weld Length:** 191" **Sch/ T:** 9.0" **Angle's Used:** 0°L, 45°S, 60°S,

NOTE: The plot shown is an electronic representation of the actual profile and not to scale.

TOTAL EXAM VOLUME OBTAINED: 64%

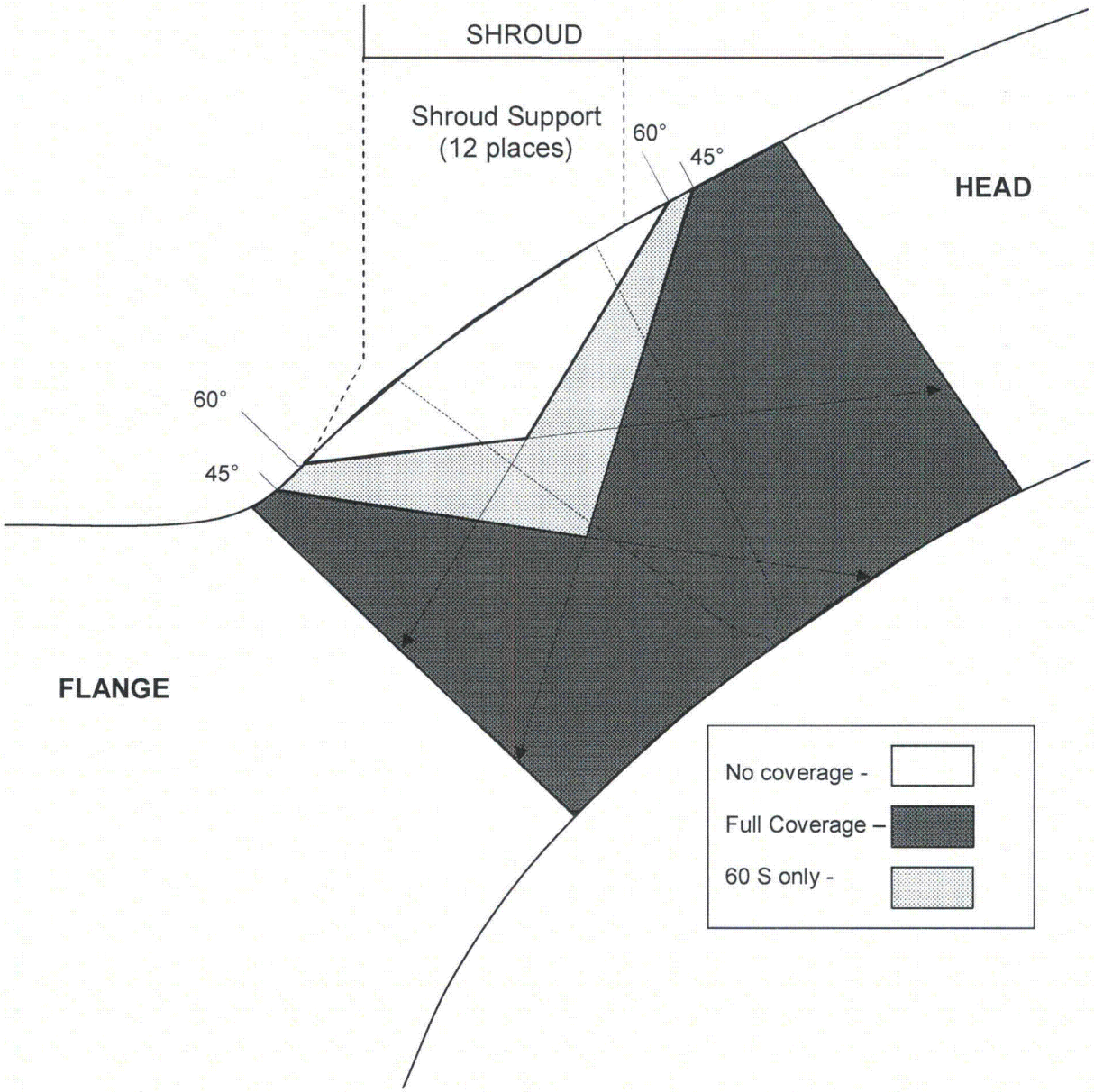

COMMENTS: Exam coverage limited by shroud, shroud support, and flange configuration. Six inch wide lifting lugs every 30° around the circumference of the head. Shroud located 8" from the toe of the weld on the head side. Flange located 5 inches from the toe on the opposite side.

Entergy

EXAMINATION COVERAGE PROFILE

Attachment #: 02-001	☐ ANO 1	☐ ANO 2	☐ GGNS	☐ RBS	■ W3

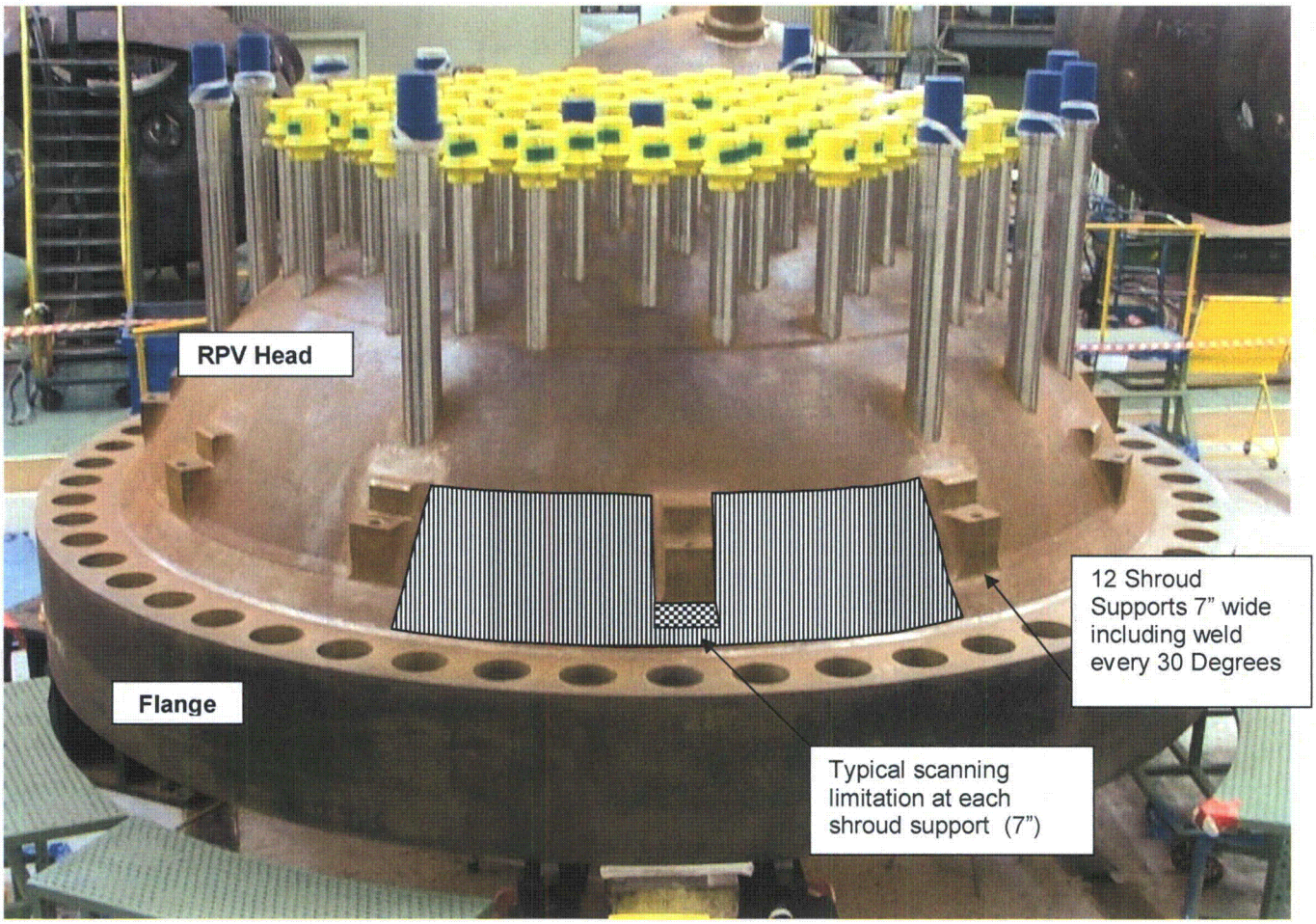

RPV Head to Flange Weld Scan Area –

Scan Limitation due to obstruction –

NOTE: This photograph is the replacement head for the Waterford III reactor vessel. The replacement head was built with the same dimensions as the original reactor vessel head.

Entergy

EXAMINATION COVERAGE PROFILE

Attachment #: 02-002	☐ ANO 1	☐ ANO 2	☐ GGNS	☐ RBS	■ W3

Component ID: 02-002, 02-003 **Report No.:** 2000-406 **Material Type:** CS

Configuration: RPV Head Peel Segment to Peel Segment Welds **Weld Length:** 22.1 **Sch/ T:** 9.0"

Angle's Used: 0°L, 45°S, 60°S,

TOTAL EXAM VOLUME OBTAINED: 18%

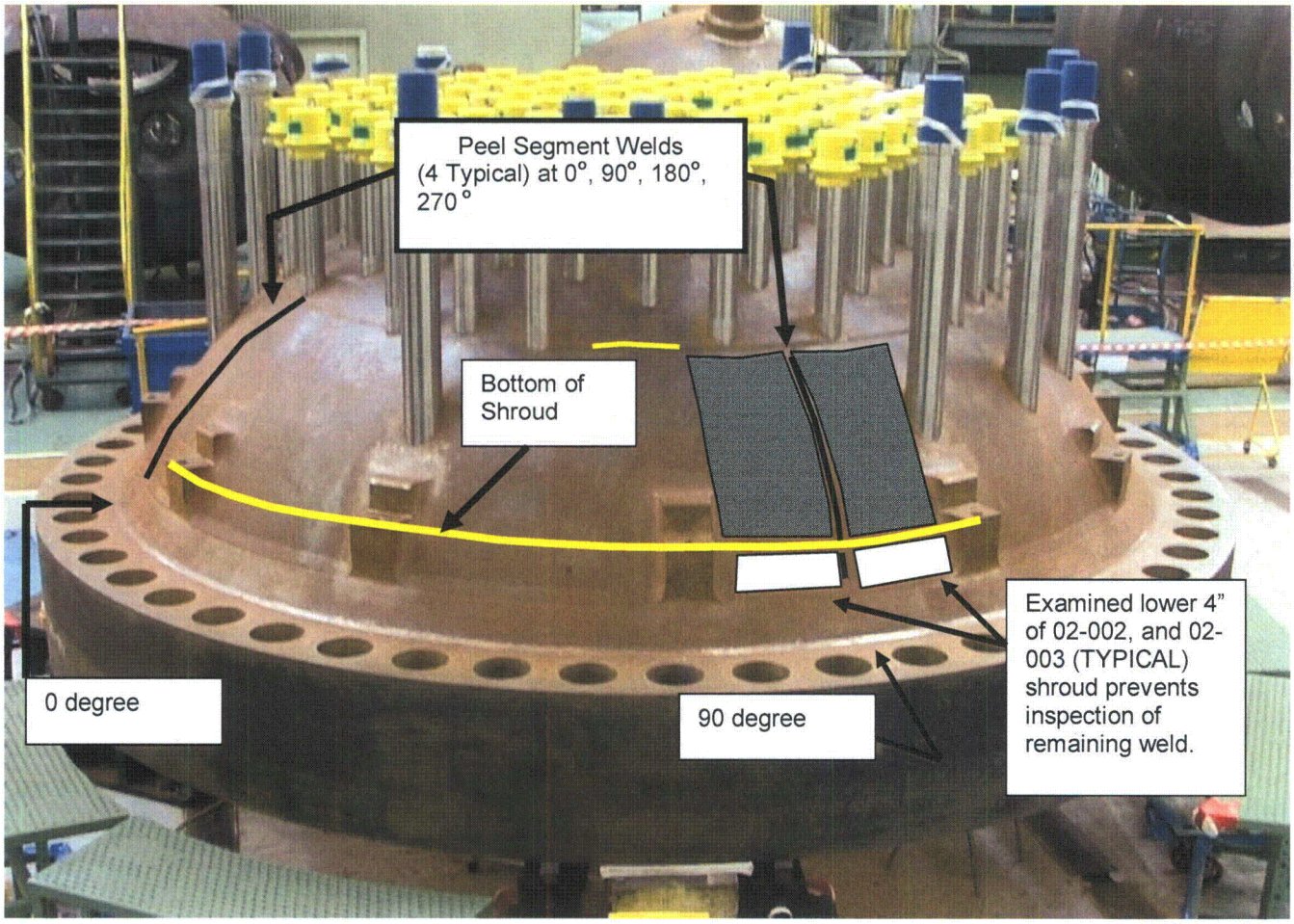

NOTE: This photograph shows the replacement head for the Waterford III reactor vessel. The replacement head was built with the same dimensions as the original reactor vessel head. The yellow line shows where the bottom of the shroud lands on the shroud support and prevents access to welds 02-002 and 02-003. Everything above the yellow line is under the shroud and inaccessible.

Entergy

EXAMINATION COVERAGE PROFILE

Attachment #: 03-010	☐ ANO 1	☐ ANO 2	☐ GGNS	☐ RBS	■ W3

Component ID: 03-010 Report No.:2002-238 Material Type: CS

Configuration: 42" Hot Leg to SG#1 Weld Length.: 158.25 Sch/ T: 8.63"

Angle's Used: 0°L, 45°S, 60°S,

NOTE: The plot shown is an electronic representation of the actual profile and not to scale.

TOTAL EXAM VOLUME OBTAINED: 86.5%

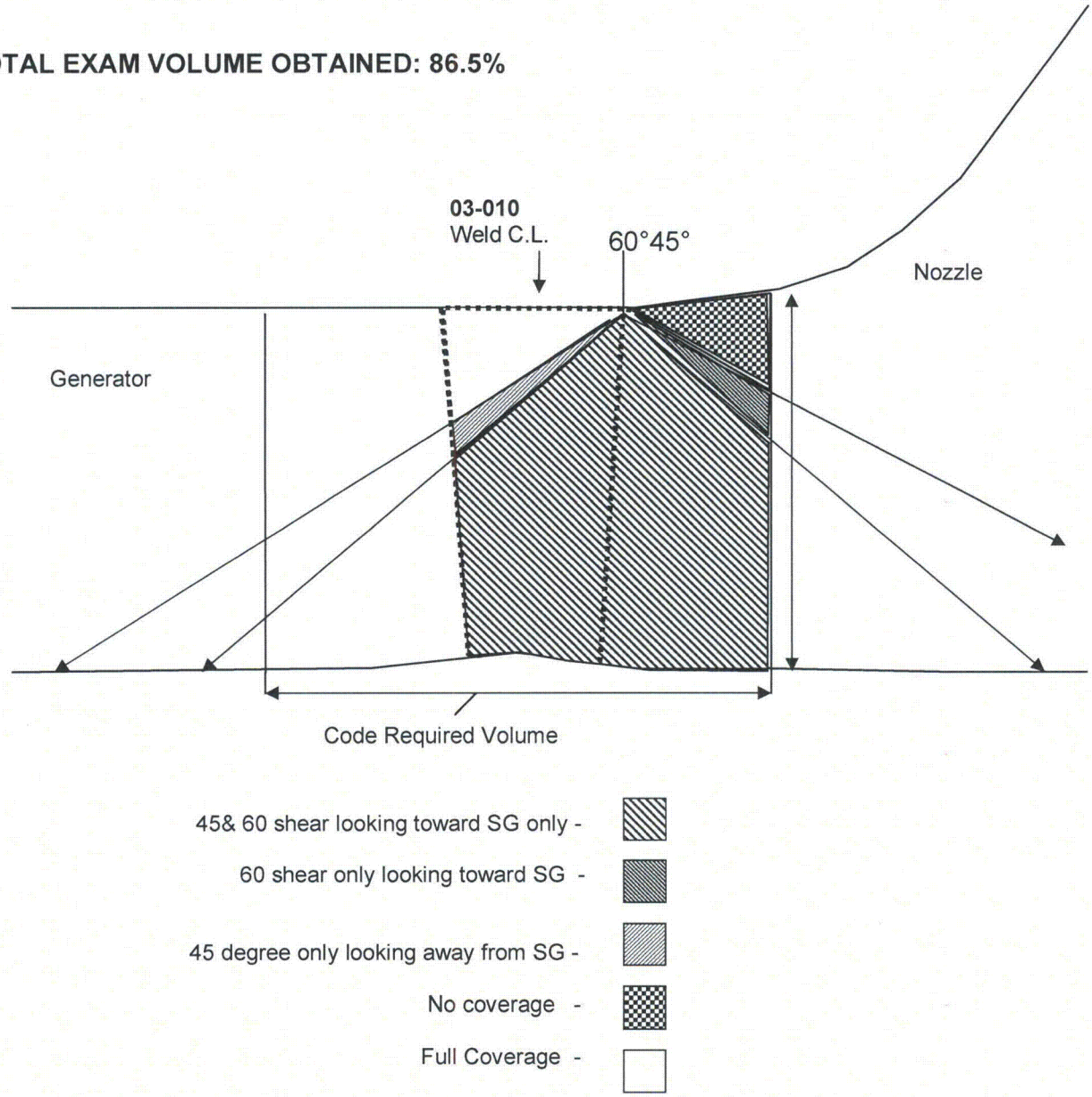

EXAMINATION COVERAGE PROFILE

Entergy

Attachment #: 03-011	☐ ANO 1	☐ ANO 2	☐ GGNS	☐ RBS	■ W3

Component ID: 03-011 & 03-012 **Report No.:** ISI UT 08-085 **Material Type:** CS

Configuration: 30" Cold Leg Nozzle to SG #1 **Sch/ T:** 4.4" **Angle's Used:** 60° S, 70°

NOTE: The plot shown is an electronic representation of the actual profile and not to scale.

TOTAL EXAM VOLUME OBTAINED: 66%

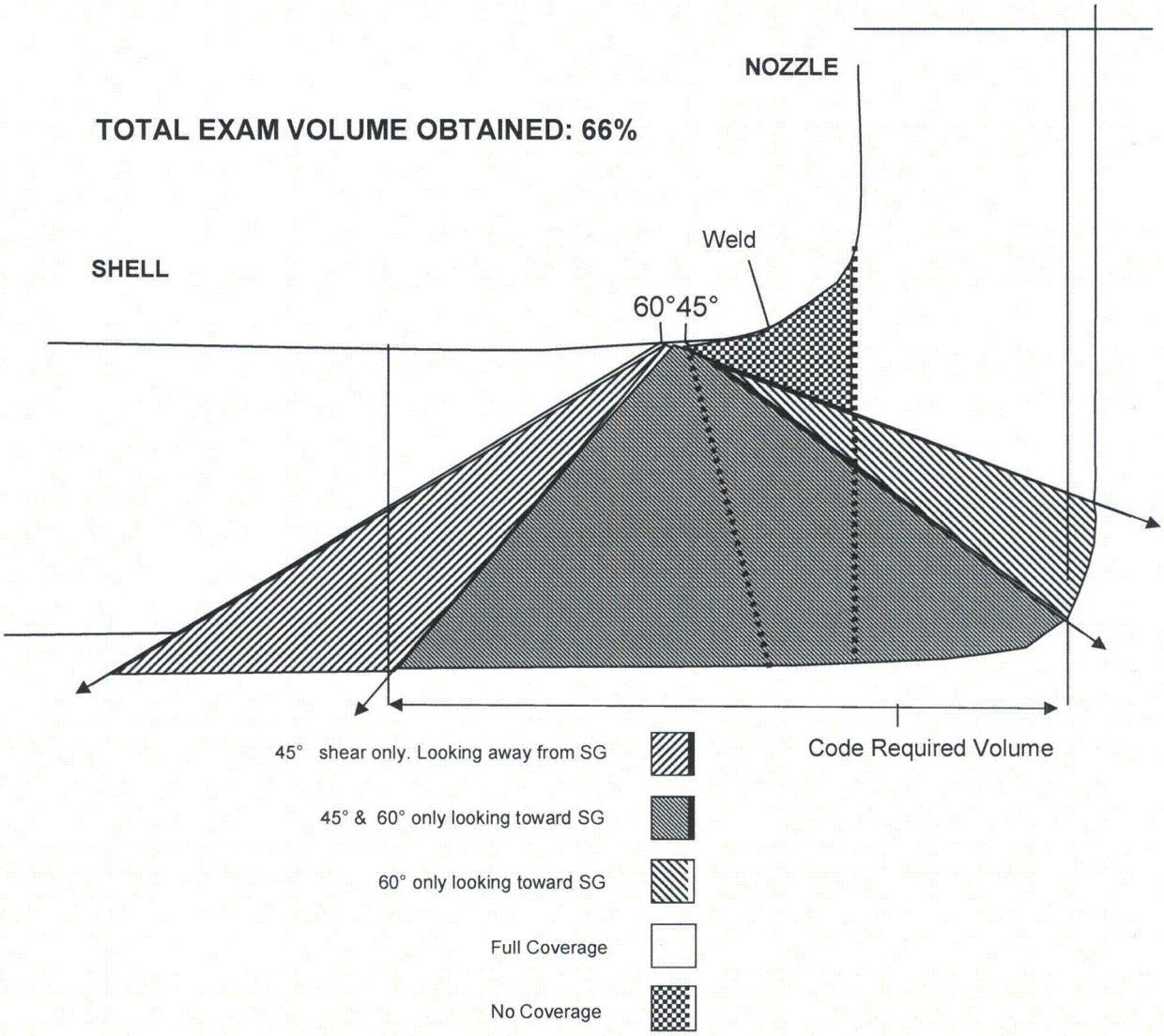

Entergy

EXAMINATION COVERAGE PROFILE

Attachment #: 04-026	☐ ANO 1	☐ ANO 2	☐ GGNS	☐ RBS	■ W3

Component ID: 04-026 **Report No.:** 99-282 **Material Type:** CS

Pipe Diameter.: N/A **Sch/ T:** 7.00" **Angle's Used:** 45°S, 60° S

NOTE: The sketch below is an electronic representation of a plan view of the weld, and is not to scale.

TOTAL EXAM VOLUME OBTAINED: 56%

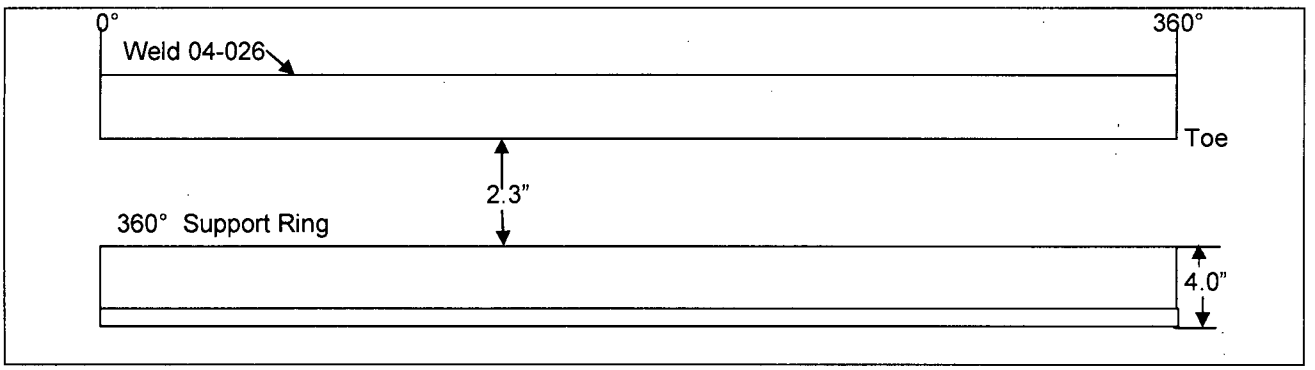

COMMENTS: Scan obstruction caused by 4" wide insulation support ring located 2.3" from toe of weld, 360° around circumference.

EXAMINATION COVERAGE PROFILE

Attachment #: 04-029	☐ ANO 1	☐ ANO 2	☐ GGNS	☐ RBS	■ W3

Component ID: 04-029 **Report No.:** ISI UT 05 028 **Material Type:** CS

Configuration: SG#2 Top Head Torus to Top Head Dome **Weld Length.:** 125"

Sch/ T: 5.5" **Angle's Used:** 45°S, 60°S, 0°L

NOTE: The plot shown is an electronic representation of the scan depicting coverage of the stud area, the remaining area has 100% coverage. This profile and not to scale.

TOTAL EXAM VOLUME OBTAINED: 89%

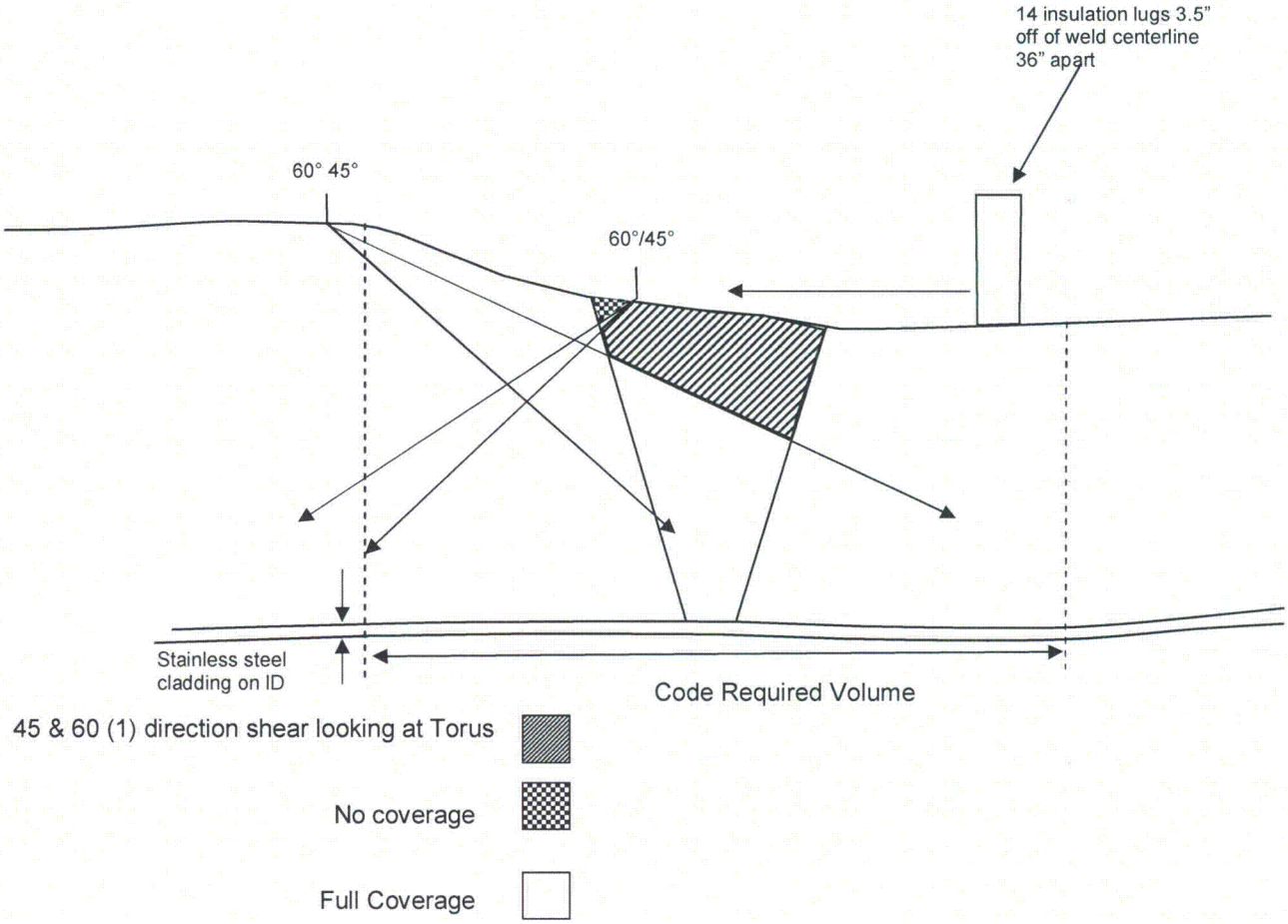

COMMENTS: Scanning limited for 11.3% of weld circumference, due to 14 insulation lugs located 3.5" from weld centerline every 36" around the circumference.

EXAMINATION COVERAGE PROFILE

Attachment #: 04-030	☐ ANO 1	☐ ANO 2	☐ GGNS	☐ RBS	■ W3

Component ID: 04-030 **Report No.:** ISI UT 05-029 **Material Type:** CS

Configuration: SG#2 MS Nozzle to Top Head Dome **Weld Length.:** 125.7" **Sch/ T:** 5.5"

Angle's Used: 45° S, 60°S, 0° L

NOTE: The plot shown is an electronic representation of the actual profile and not to scale.

TOTAL EXAM VOLUME OBTAINED: 86%

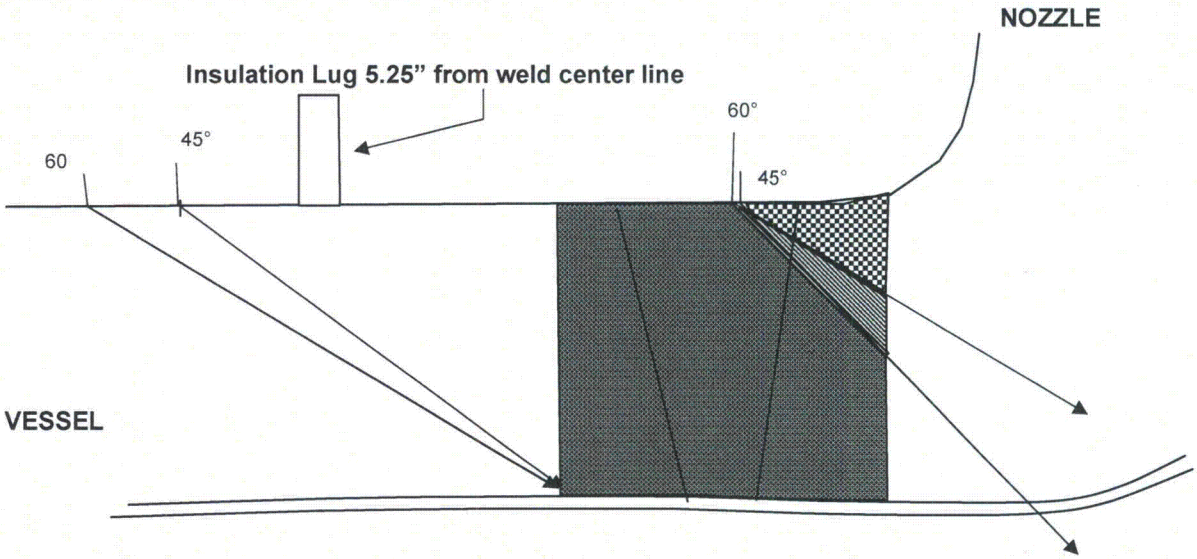

Full Coverage -

60 shear only looking toward SG -

No coverage -

Full Coverage -

COMMENTS: 14% of circumference of weld partially limited due to 8 insulation lugs located 5.25" from the weld centerline every 24" around the circumference. The nozzle to vessel transition (crotch) limits the exam looking away from the nozzle.

EXAMINATION COVERAGE PROFILE

Attachment #: 05-009	☐ ANO 1	☐ ANO 2	☐ GGNS	☐ RBS	■ W3

Component ID: 05-009 **Report No.:** 99-194 **Material Type:** CS

Configuration: Pressurizer Surge Nozzle to Head **Sch/ T:** 4.6" **Angle's Used:** 0°L, 45°S, 60°S,

NOTE: The plot shown is an electronic representation of the actual profile and not to scale.

TOTAL EXAM VOLUME OBTAINED: 64%

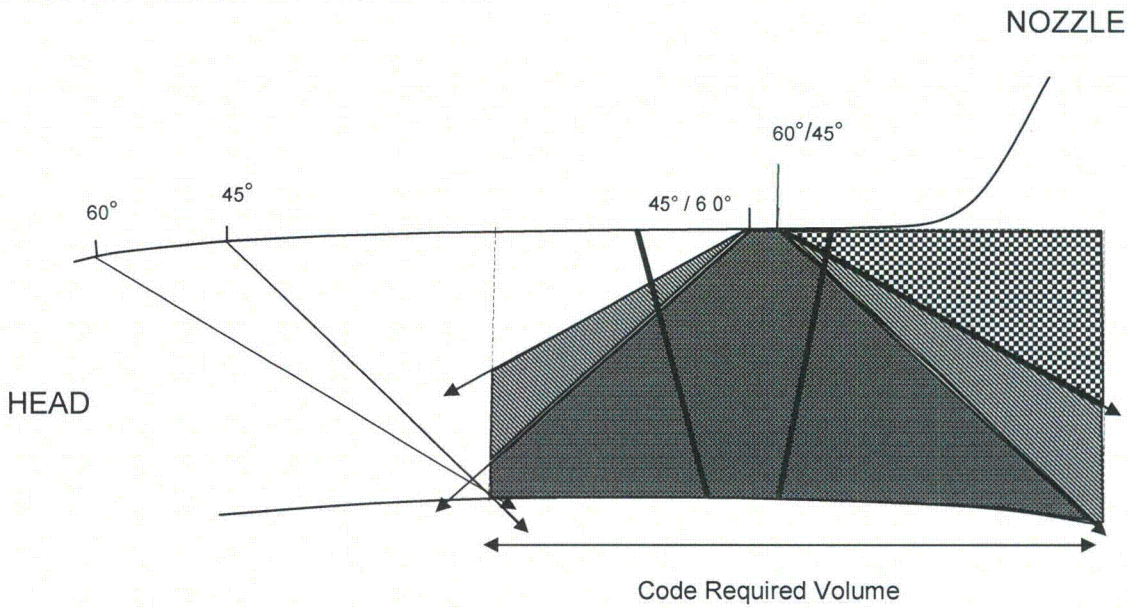

45 & 60 shear looking toward SG only -

60 shear only looking toward SG -

45 degree only looking away from SG -

No coverage -

Full Coverage -

Entergy

EXAMINATION COVERAGE PROFILE

Attachment #: 05-010

☐ ANO 1	☐ ANO 2	☐ GGNS	☐ RBS	■ W3

Component ID: 05-010 Report No.: 99-175 Material Type: CS

Configuration: Pressurizer Spray Nozzle to Head Weld Length.: 52" Sch/ T: 4.4"

Angle's Used: 0°L, 45°S, 60°S

NOTES: The plot shown is an electronic representation of the actual profile and not to scale.

TOTAL EXAM VOLUME OBTAINED: 74.8%

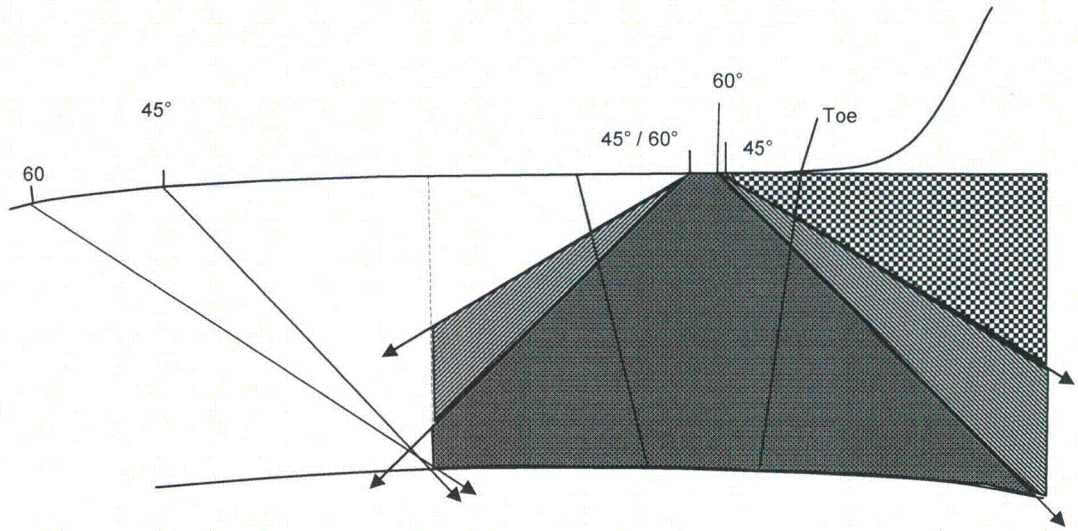

45 & 60 shear looking toward SG only -

60 shear only looking toward SG -

45 degree only looking away from SG -

No coverage -

Full Coverage -

COMMENTS: Exam coverage limited by nozzle to head configuration. See the drawing above for limitations and weld coverage profile.

EXAMINATION COVERAGE CALCULATION SHEET

Attachment #: 05-011	☐ ANO 1	☐ ANO 2	☐ GGNS	☐ RBS	■ W3

Component ID: 05-011, 05-012, 05-013 **Report No.:** 99-175 **Material Type: CS**

Configuration: Pressurizer Safety Nozzle to Head Weld **Weld Length.:** 52" **Sch/ T:** 4.4"

Angle's Used: 0°L, 45°S, 60°S

NOTES: The plot shown is an electronic representation of the actual profile and not to scale.

TOTAL EXAM VOLUME OBTAINED: 65.9%

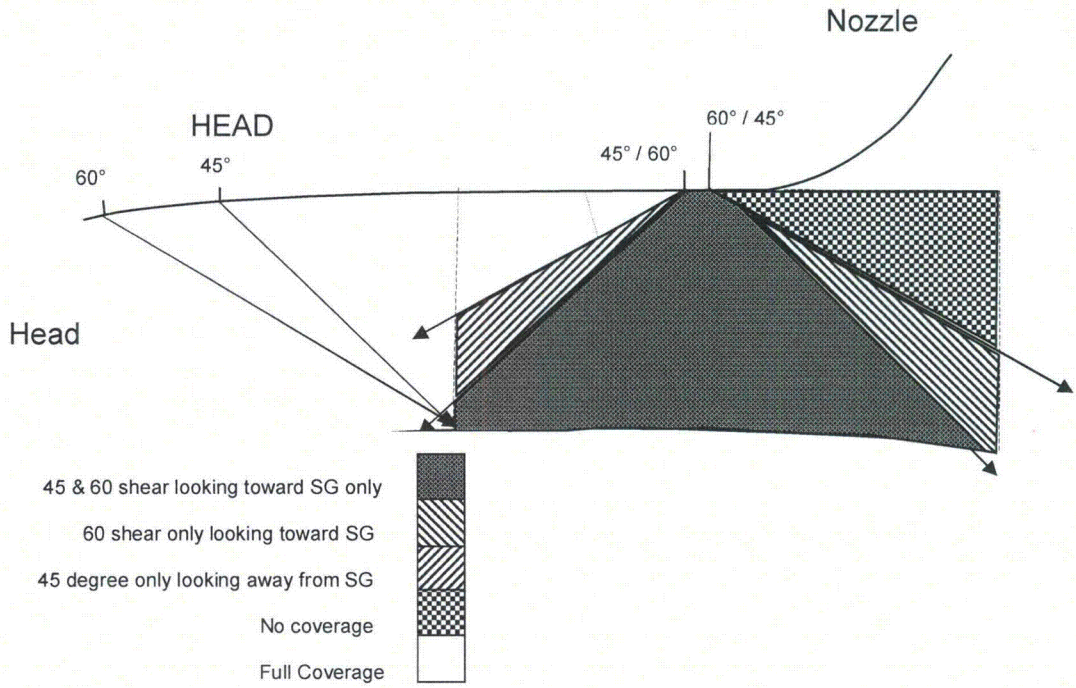

Entergy

EXAMINATION COVERAGE PROFILE

Attachment #: 05-011	☐ ANO 1	☐ ANO 2	☐ GGNS	☐ RBS	■ W3

Component ID: **05-011, 05-012, 05-013**

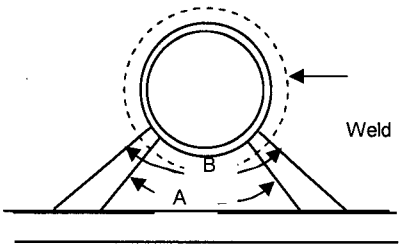

A = 13" limitation to the 45° Axial examination, measured circumferentially.

B = 20" limitation to the 60° Axial examination, measured circumferentially.

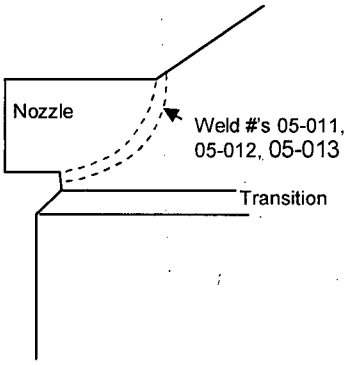

COMMENTS: This plot is a typical profile for 05-011, 05-012 and 05-013. Exam coverage limited by nozzle to shell configuration. The drawing above depicts the scanning limitations caused by the head to shell transition.

Entergy

EXAMINATION COVERAGE PROFILE

Attachment #: 05-014	☐ ANO 1	☐ ANO 2	☐ GGNS	☐ RBS	■ W3

Component ID: 05-014 **Report No.:** 99-197 **Material Type:** CS

Configuration: Pressurizer Surge Nozzle Inner Radius **Sch/ T:** 4.4" **Angle's Used:** 60 °S, 70°S

NOTE: **The plot shown is an electronic representation of the actual profile and not to scale.**

TOTAL EXAM VOLUME OBTAINED: 29.4%

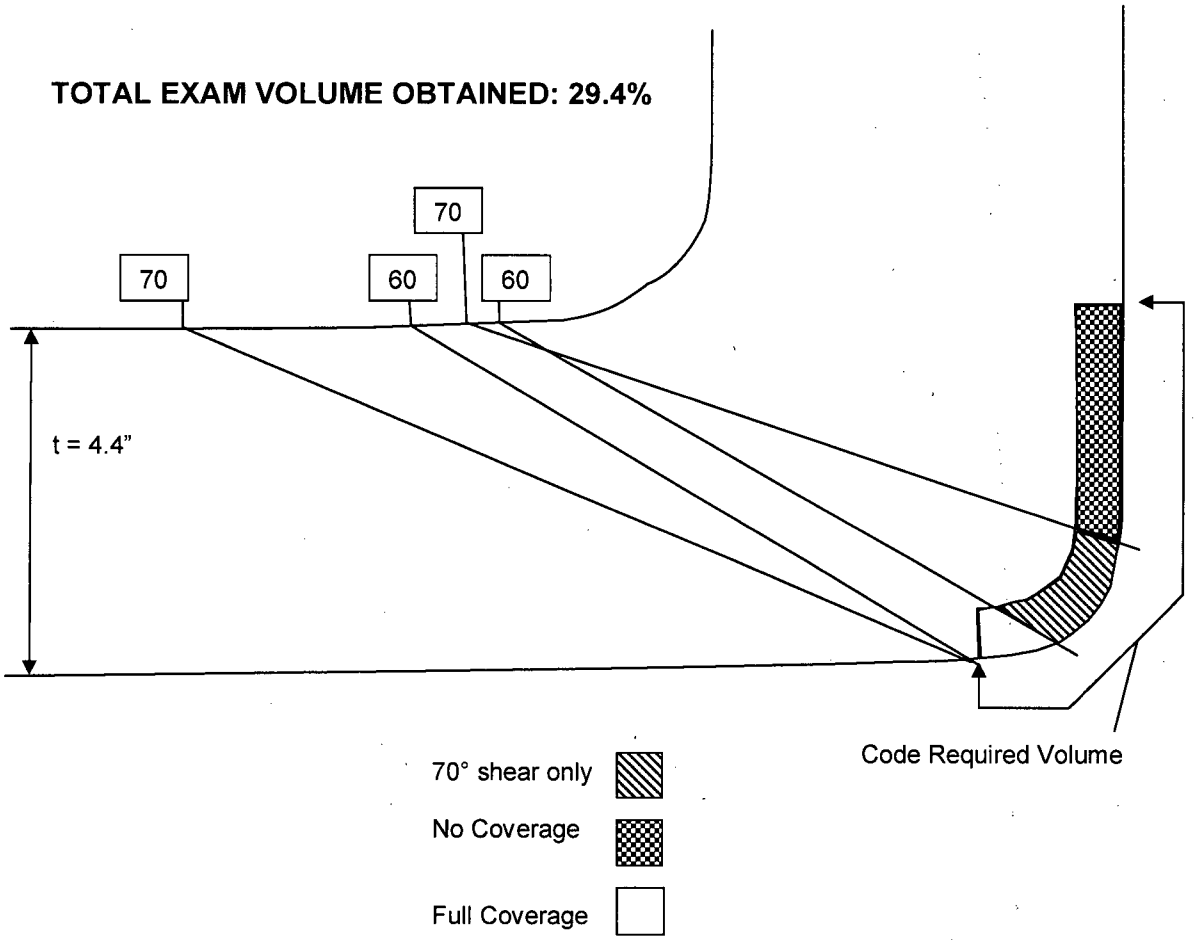

COMMENTS: Scanning limited by nozzle to head transition configuration.

Entergy

EXAMINATION COVERAGE PROFILE

Attachment #: 05-015	☐ ANO 1	☐ ANO 2	☐ GGNS	☐ RBS	■ W3

Component ID: 05-015 **Report No.:** 99-166 **Material Type:** CS

Configuration: Pressurizer Spray Nozzle Inner Radius **Sch/ T:** 4.4"

Angle's Used: 60°S, 70°S

NOTE: **The plot shown is an electronic representation of the actual profile and not to scale.**

TOTAL EXAM VOLUME OBTAINED: 60.4%

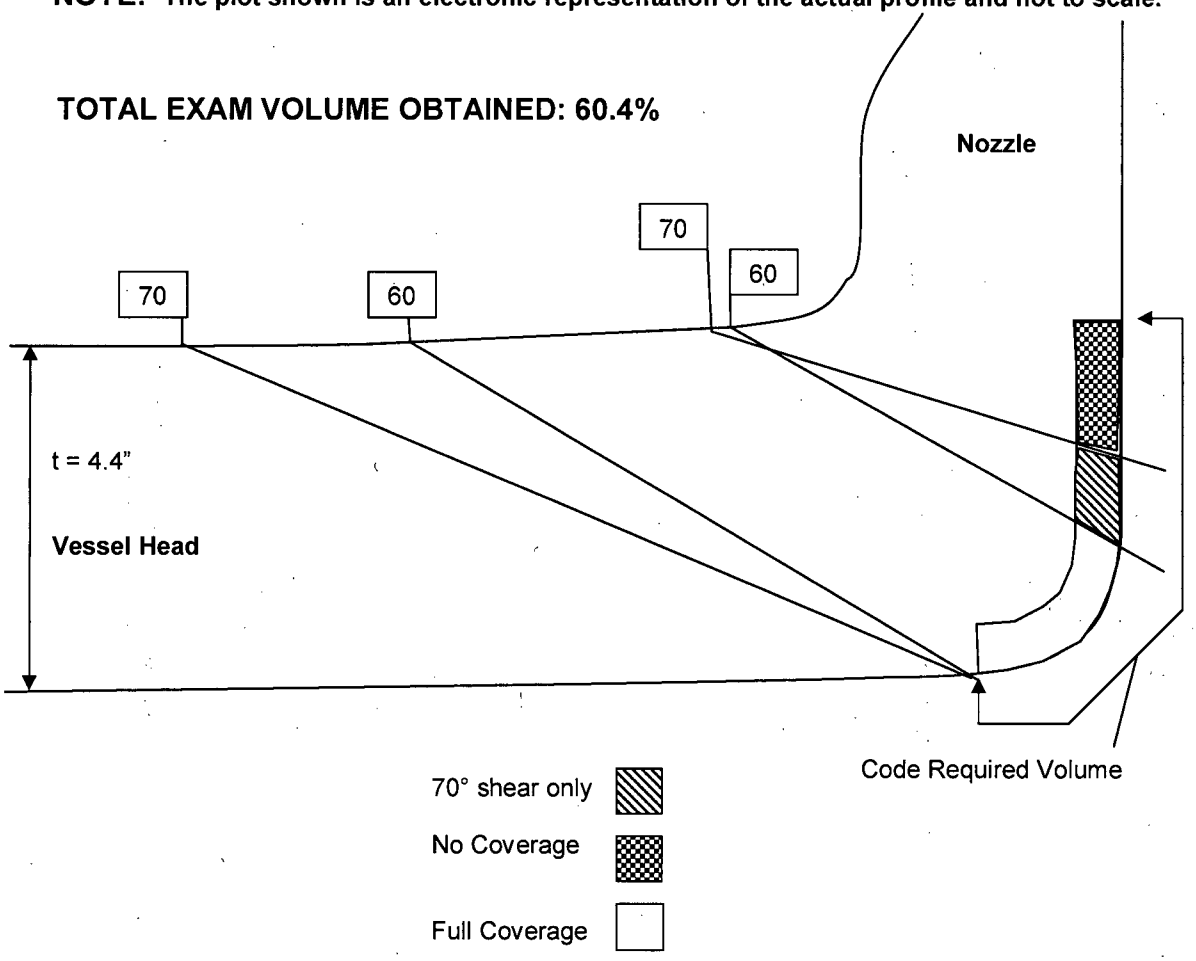

COMMENTS: Scanning limited by nozzle to head transition configuration.

Entergy

EXAMINATION COVERAGE PROFILE

Attachment #: 05-016

☐ ANO 1	☐ ANO 2	☐ GGNS	☐ RBS	■ W3

Component ID: 05-016, 05-017, 05-018 Report No.: 99-177/178/179 Material Type: CS

Configuration: Pressurizer Safety Nozzle Inner Radius Sch/ T: 4.4"

Angle's Used: 60°S, 70°S

NOTE: The plot shown is an electronic representation of the actual profile and not to scale.

TOTAL EXAM VOLUME OBTAINED: 72%

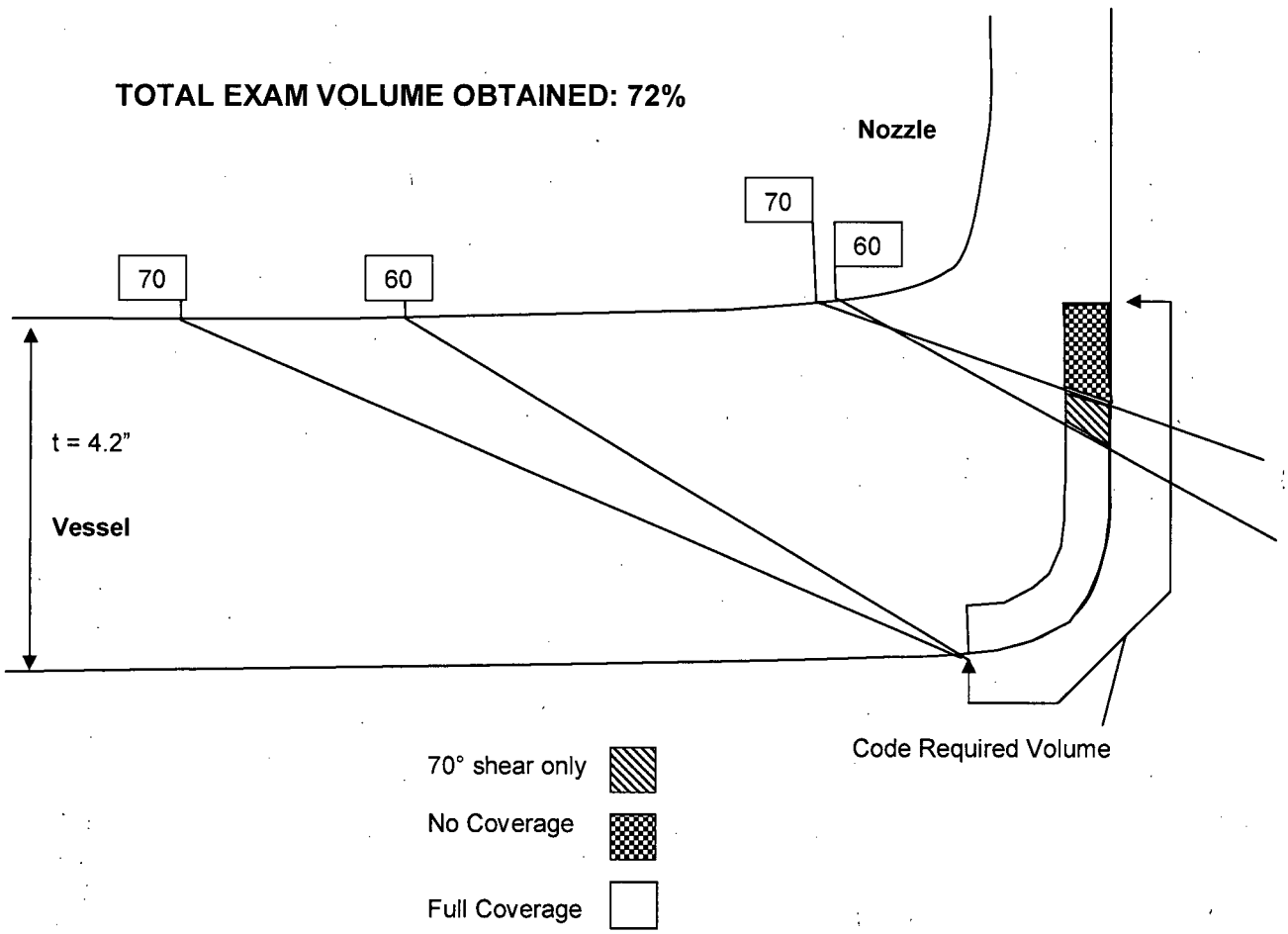

COMMENTS: Scanning limited by nozzle to head transition configuration.

EXAMINATION COVERAGE PROFILE

Attachment #: 06-006	☐ ANO 1	☐ ANO 2	☐ GGNS	☐ RBS	■ W3

Component ID: 06-006 **Report No.:** 2000-302 **Material Type:** C/CSS

Pipe Diameter.: 14" **Sch/ T:** 1.10" **Angle's Used:** 45° & 60° S; 40° RL, 45° RL, 60 RL

NOTES: The plot shown is an electronic representation of the actual profile and not to scale.

TOTAL EXAM VOLUME OBTAINED: 86.5%

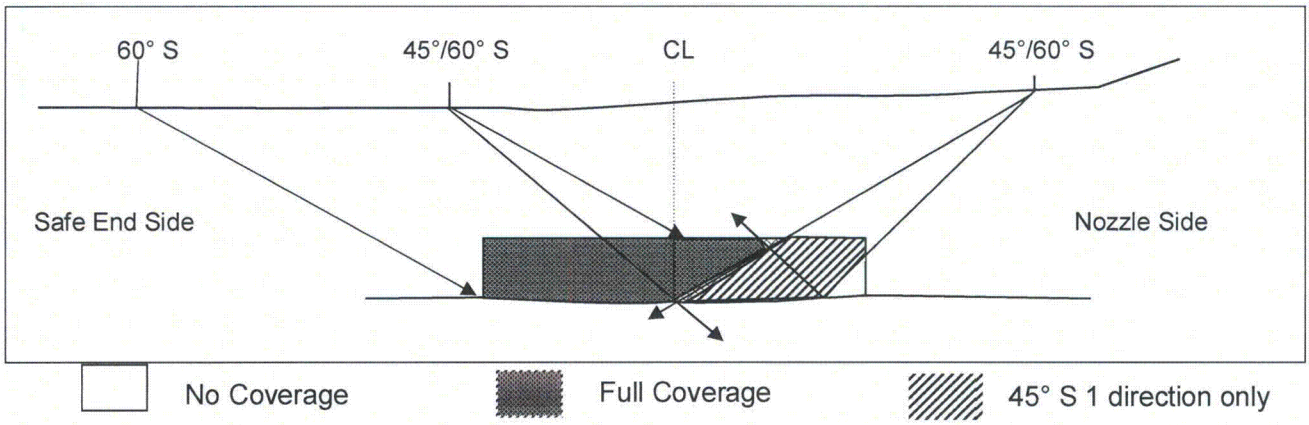

COMMENTS: Scanning limited on nozzle side of weld due to nozzle transition.

NOTE: **Per MRP-139 Inspection, 26-006 had a full structural weld overlay installed in RFO-15.**

Entergy

EXAMINATION COVERAGE PROFILE

Attachment #: 06-007	☐ ANO 1	☐ ANO 2	☐ GGNS	☐ RBS	■ W3

Component ID: 06-007 **Report No.:** ISI-UT-08-079 **Material Type:** CS

Configuration: RCS Hot Leg **Pipe Diameter.:** 42" **Sch/ T:** 4.04"

Angle's Used: 45°S, 60°S

NOTE: The plot shown is an electronic representation of the actual profile and not to scale.

TOTAL EXAM VOLUME OBTAINED: 89%

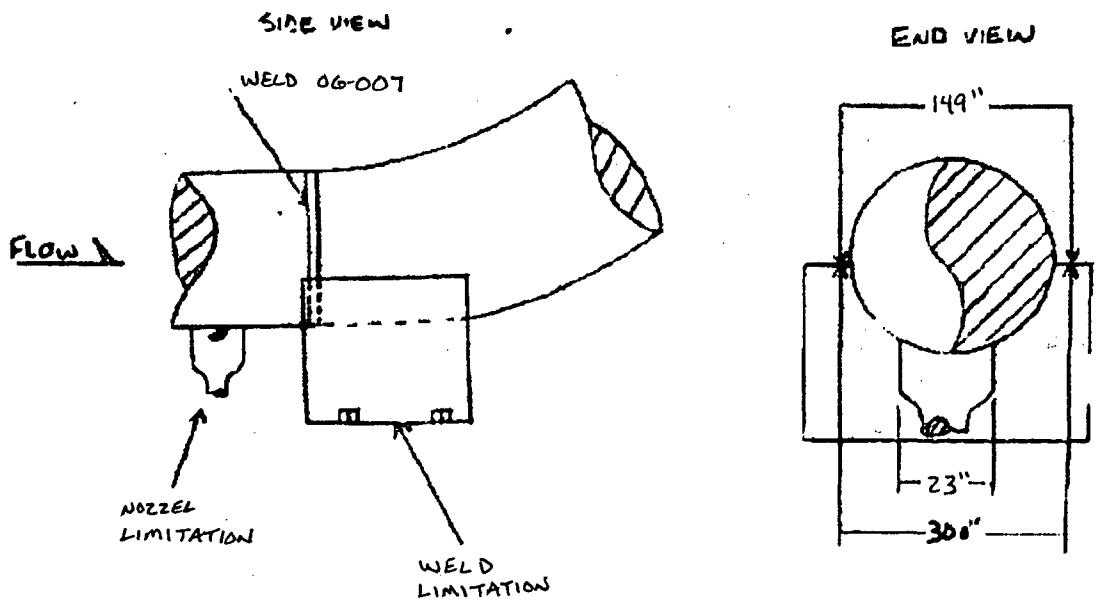

COMMENTS: Limited scan due to permanent concrete saddle type support and nozzle at bottom (180°) of RCS pipe.

Page 1 of 2

Entergy

EXAMINATION COVERAGE PROFILE

Attachment #: 06-007	☐ ANO 1	☐ ANO 2	☐ GGNS	☐ RBS	■ W3

NOTE: The plot shown is an electronic representation of the actual profile and not to scale.

TOTAL EXAM VOLUME OBTAINED: 89%

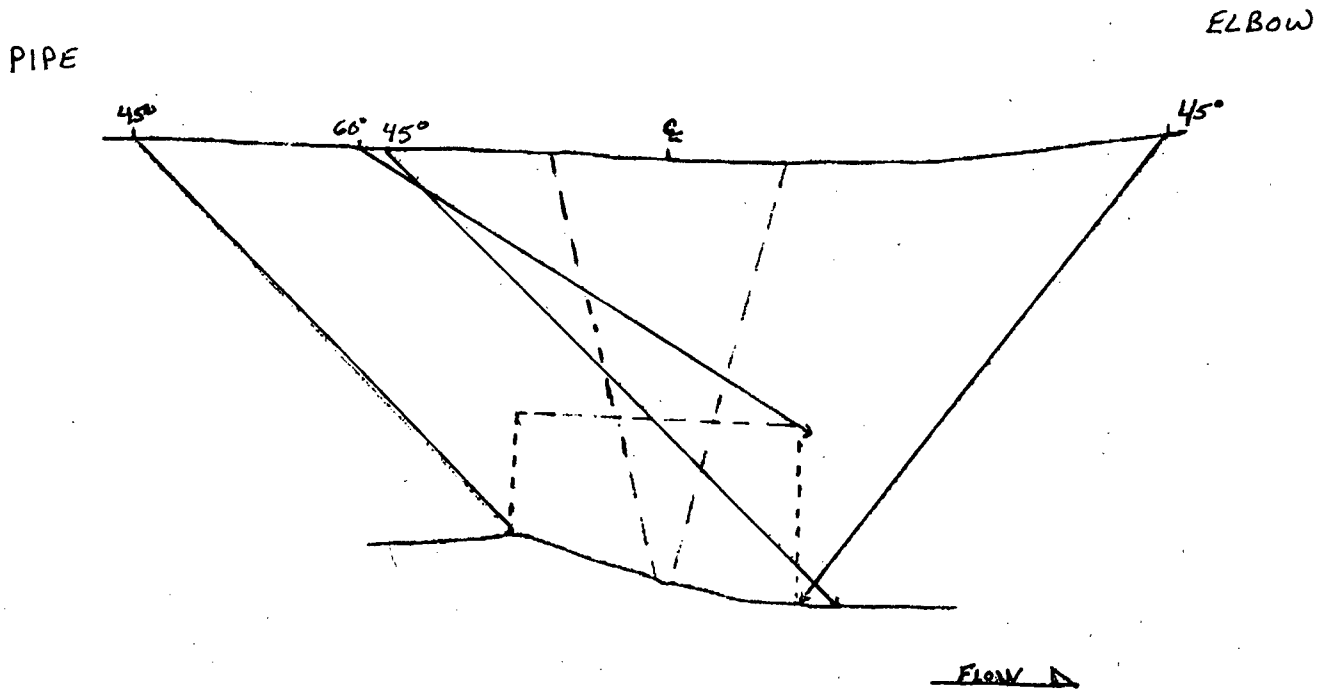

Page 2 of 2

Entergy

EXAMINATION COVERAGE PROFILE

Attachment #: 07-013

☐ ANO 1	☐ ANO 2	☐ GGNS	☐ RBS	■ W3

Component ID: 07-013 Report No.: 2003-379 Material Type: CS .

Pipe Diameter: 30" Sch/ T: 3.7" Angle's Used: 0°L, 45°S & 60° S

NOTES: The plot shown is an electronic representation of the actual profile and not to scale.

TOTAL EXAM VOLUME OBTAINED: 82.2%

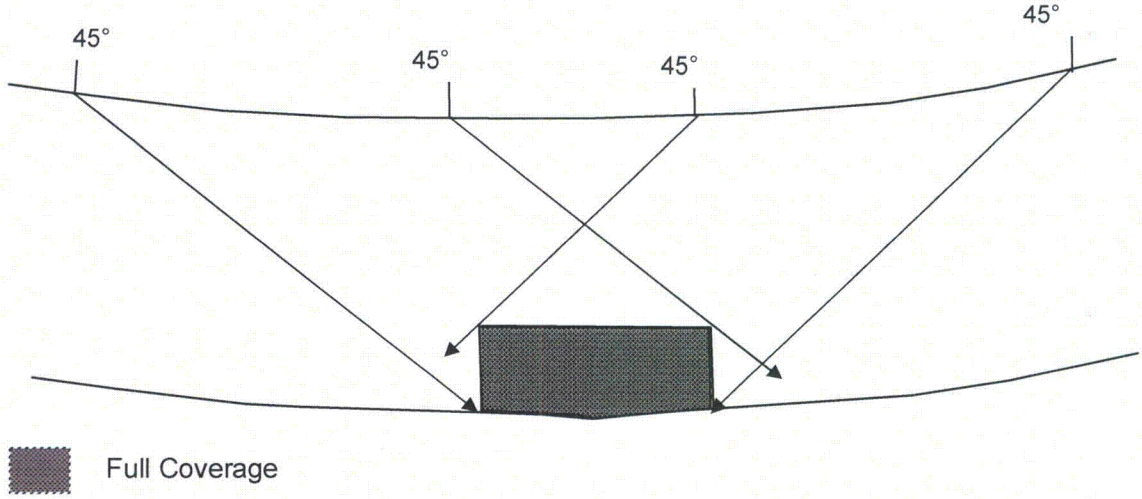

COMMENTS: Scanning obstructed for 17.8% of weld circumference due to adjacent permanent support structure.

Entergy

EXAMINATION COVERAGE PROFILE

Attachment #: 08-008	☐ ANO 1	☐ ANO 2	☐ GGNS	☐ RBS	■ W3

Component ID: 08-008 **Report No.:** 2002-261 **Material Type:** CS

Configuration: 12" Safety Injection Nozzle to 30" RCS Loop 1A Hot Leg **Sch/ T:** 5.5"

Angle's Used: 45° S

NOTES: The plot shown is an electronic representation of the actual profile and not to scale.

TOTAL EXAM VOLUME OBTAINED: 50%

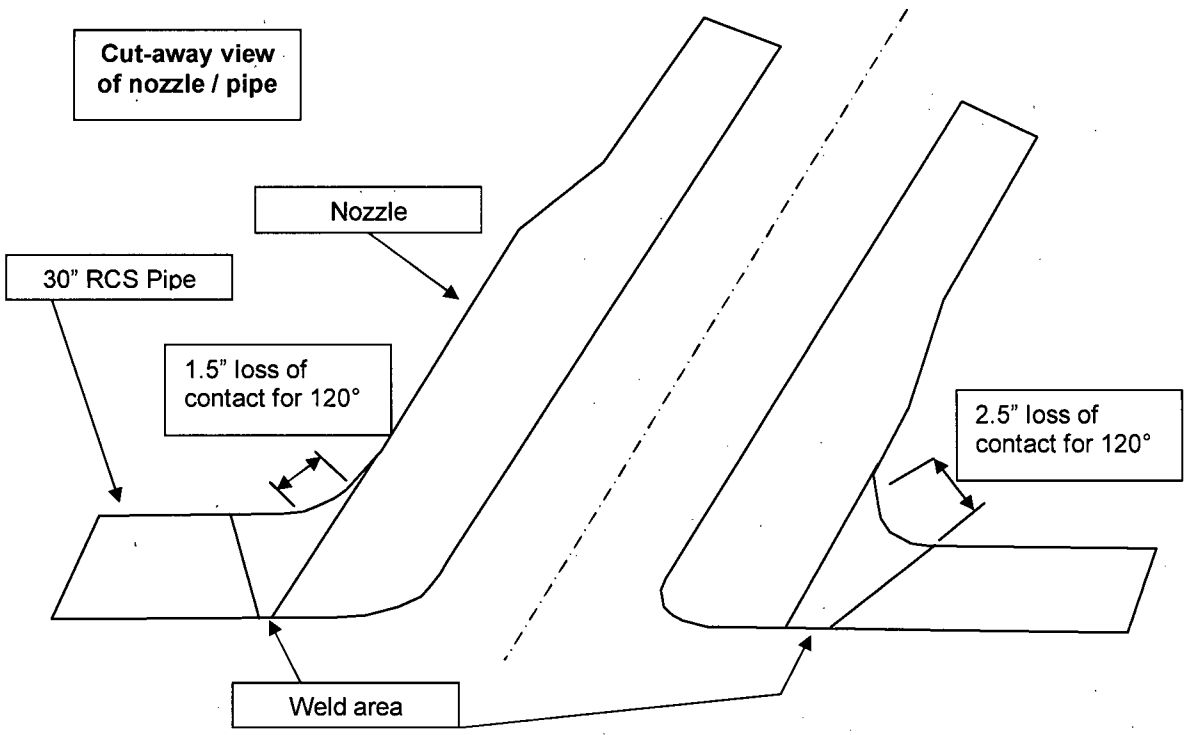

Page 1 of 2

Entergy

EXAMINATION COVERAGE PROFILE

Attachment #: 08-008	☐ ANO 1	☐ ANO 2	☐ GGNS	☐ RBS	■ W3

Component ID:08-008

NOTES: **The plot shown is an electronic reproduction of the actual profile and not to scale.**

TOTAL EXAM VOLUME OBTAINED: 50%

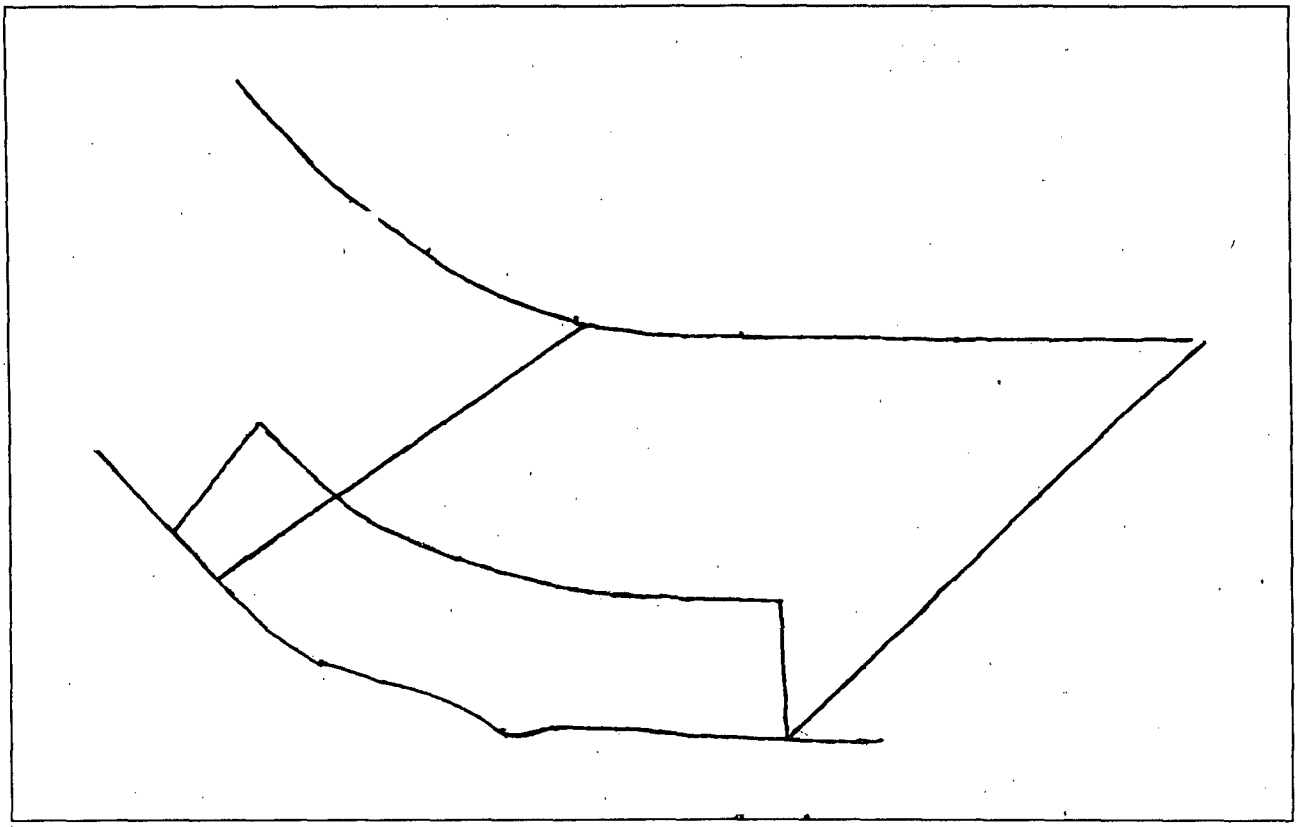

COMMENTS: Scanning limited to 30" pipe side, due to nozzle OD configuration. ID clad prevents two directional coverage, via the bounce.

Page 2 of 2

Entergy

EXAMINATION COVERAGE PROFILE

Attachment #: 08-014	☐ ANO 1	☐ ANO 2	☐ GGNS	☐ RBS	■ W3

Component ID: 08-014 Report No.: 95-306 Material Type: CS .

Pipe Diameter.: 30" Sch/ T: 3.125" Angle's Used: 40° RL 45° RL

NOTES: The plot shown is an electronic reproduction of the actual profile and not to scale.

TOTAL EXAM VOLUME OBTAINED: 71%

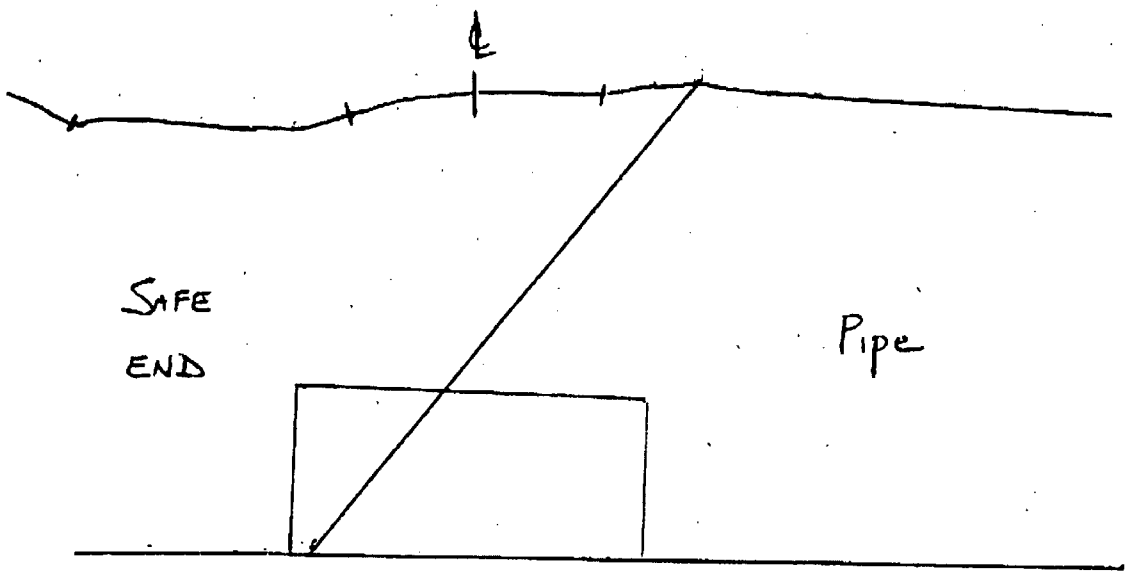

COMMENTS: Scan coverage limited on safe end side of weld due to short safe end length and the adjacent pump configuration.

Entergy

EXAMINATION COVERAGE PROFILE

Attachment #: 09-002	☐ ANO 1	☐ ANO 2	☐ GGNS	☐ RBS	■ W3

Component ID: 09-002 **Report No.:** 2003-401 **Material Type:** CS

Pipe Diameter.: 30" **Sch/ T:** 3.125" **Angle's Used:** 45°S, 60°S

NOTES: The sketch shown is an electronic reproduction and not to scale.

TOTAL EXAM VOLUME OBTAINED: 87%

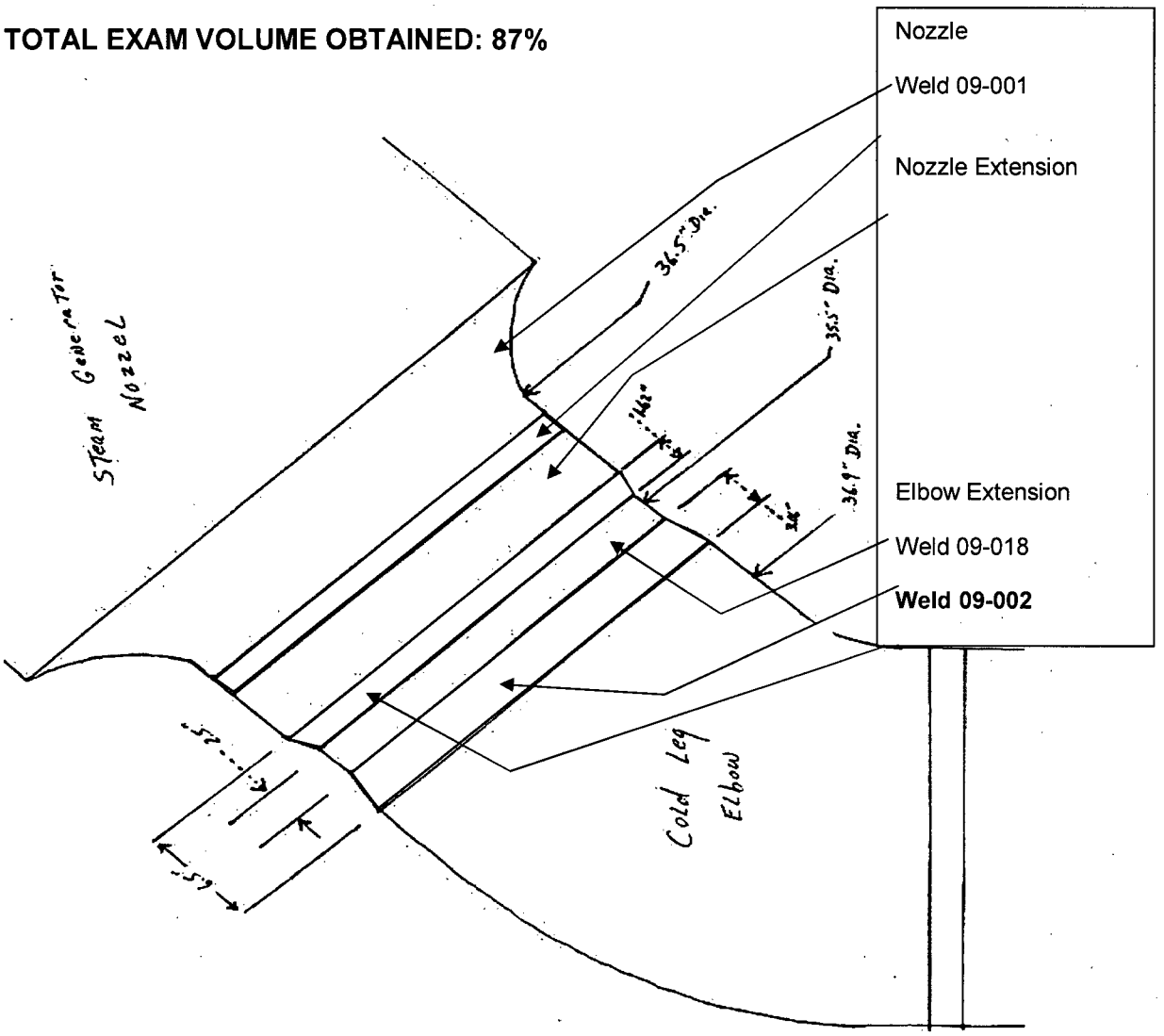

Entergy

EXAMINATION COVERAGE PROFILE

Attachment #: 09-002	☐ ANO 1	☐ ANO 2	☐ GGNS	☐ RBS	■ W3

Component ID: 09-002 **Report No.:** 2003-401 **Material Type:** CS

Pipe Diameter.: 30" **Sch/ T:** 3.125" **Angle's Used:** 45°S, 60°S

NOTES: **The plot shown is an electronic reproduction of the actual profile and not to scale.**

TOTAL EXAM VOLUME OBTAINED: 87%

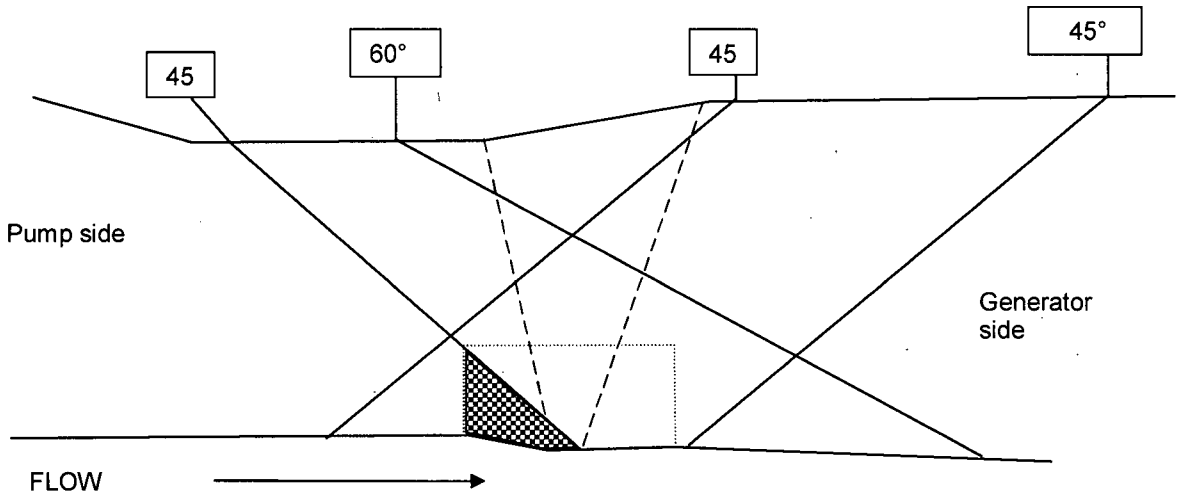

No Coverage –

COMMENTS: Scanning limited on elbow side of weld due to elbow OD configuration, limiting the amount of elbow side coverage.

Page 2 of 2

Entergy

EXAMINATION COVERAGE PROFILE

Attachment #: 09-005	☐ ANO 1	☐ ANO 2	☐ GGNS	☐ RBS	■ W3

Component ID: 09-005 Report No.: 2003-402 Material Type: CS

Pipe Diameter.: 30" Sch/ T: 3.5" Angle's Used: 45° S.

NOTES: The plot shown is a reproduction of the actual profile and not to scale.

TOTAL EXAM VOLUME OBTAINED: 85%

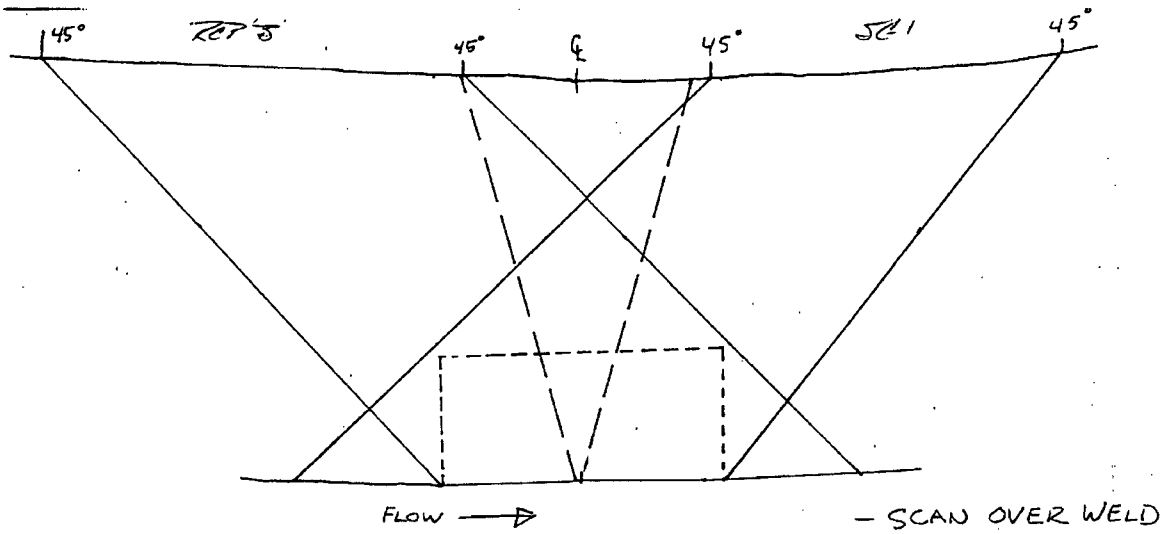

COMMENTS: Scanning limited on elbow side of weld for 17" of circumference due to adjacent permanent support. Scanning performed across weld from pipe side, but no second direction in obstructed area due to ID cladding, which precludes bouncing sound.

Entergy

EXAMINATION COVERAGE PROFILE

Attachment #: 09-016	☐ ANO 1	☐ ANO 2	☐ GGNS	☐ RBS	■ W3

Component ID: 09-016, 09-017 **Report No.:** 2000-441 **Material Type:** CS

Pipe Diameter.: 30" **Sch/ T:** 3.125"

Angle's Used: 45°S, 60°S, 45°RL, 60°RL,70°RL

NOTE: The plot shown is an electronic representation of the actual profile and not to scale.

TOTAL EXAM VOLUME OBTAINED 09-016 = 52.5% TOTAL EXAM VOLUME OBTAINED 09-017 = 17.5%

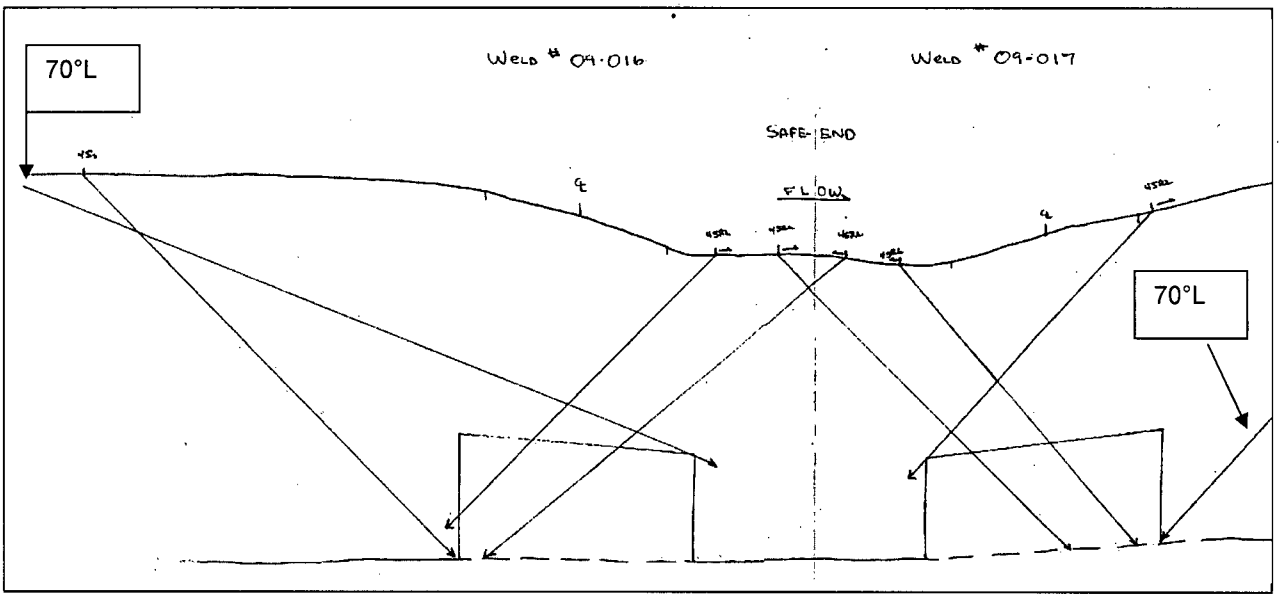

COMMENTS: 09-016 - Scanning limited on safe end side of weld due to the width and shape of safe end.
09-017 - Scanning limited on safe end side of weld due to the width and shape of safe end. Scanning on Pump side is considered "best effort" due to cast stainless steel material. 1.9% of safe end side was also obstructed by a 1" diameter nozzle.

Entergy

EXAMINATION COVERAGE PROFILE

Attachment #: 10-001	☐ ANO 1	☐ ANO 2	☐ GGNS	☐ RBS	■ W3

Component ID: 10-001 **Report No.:** 2000-457 **Material Type:** CS

Pipe Diameter.: 30" **Sch/ T:** 3.125" **Angles used:** 45°RL, 40°RL,

NOTE: The plot shown is a reproduction of the actual profile and not to scale.

TOTAL EXAM VOLUME OBTAINED: 18%

SAFE END SIDE

NOZZLE SIDE

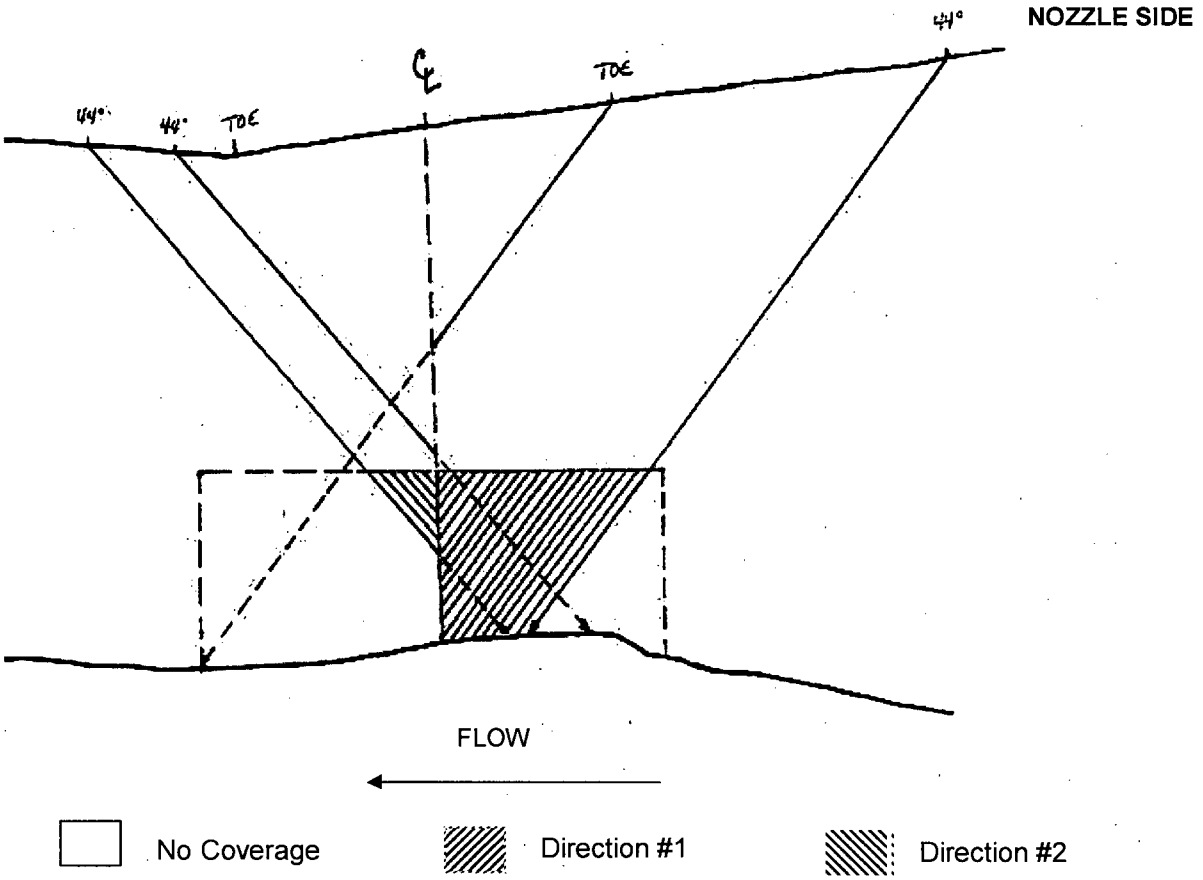

TOTAL EXAM VOLUME OBTAINED: 18%

COMMENTS: Scanning limited on safe end side of weld due to the width and shape of safe end. Scanning on Nozzle side limited by nozzle transition.

Entergy

EXAMINATION COVERAGE PROFILE

Attachment #: 10-002	☐ ANO 1	☐ ANO 2	☐ GGNS	☐ RBS	■ W3

Component ID: 10-002 **Report No.:** 2000-457 **Material Type:** CS

Pipe Diameter.: 30" **Sch/ T:** 3.125" **Angle's Used:** 40°RL, 45°RL, 60°RL, 45°S

NOTE: The plot shown is a reproduction of the actual profile and not to scale.

TOTAL EXAM VOLUME OBTAINED: 44.2%

30" RCS PIPE **SAFE END SIDE**

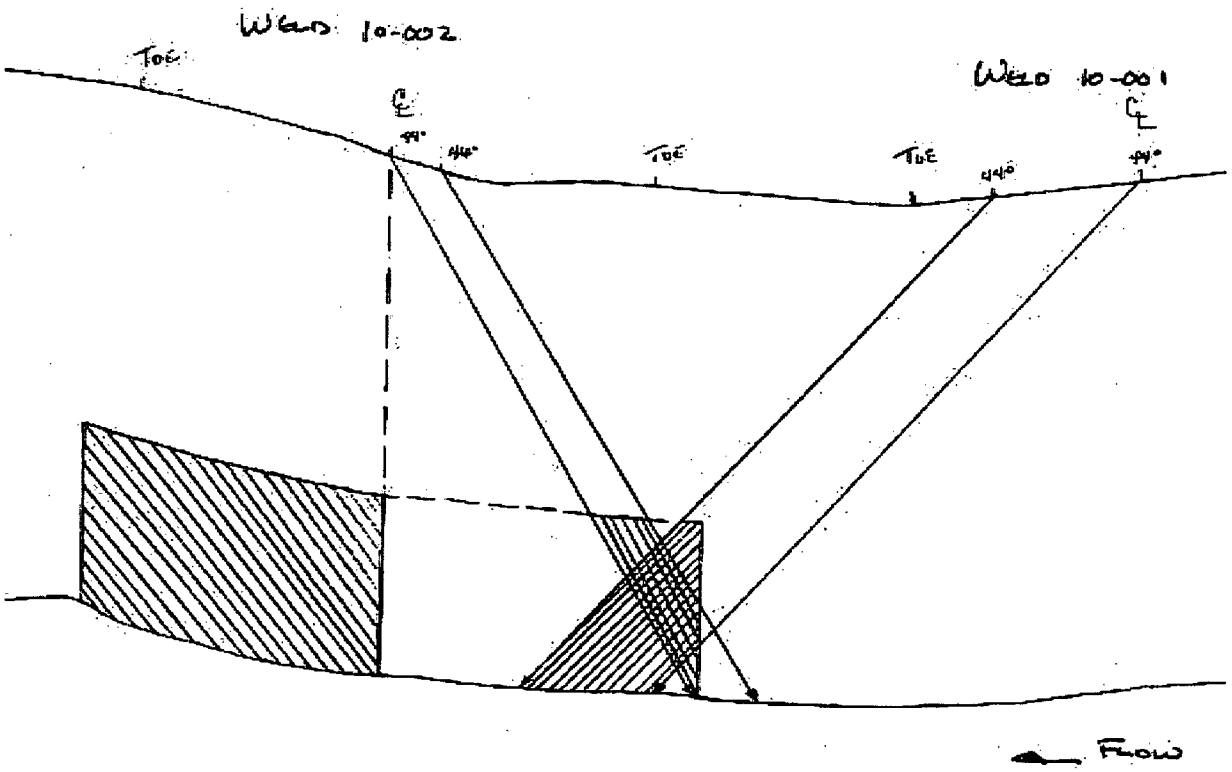

FLOW

No Coverage Direction #1 Direction #2

COMMENTS: Scanning limited on safe end side due to width and shape of safe end. Pipe side scanning limited by adjacent nozzle for 6.75" of 116" of circumference.

Entergy

EXAMINATION COVERAGE PROFILE

Attachment #: 13-001	☐ ANO 1	☐ ANO 2	☐ GGNS	☐ RBS	■ W3

Component ID: 13-001 **Report No.:** 2000-474 **Material Type:** CS

Pipe Diameter.: 30" **Sch/ T:** 3.5" clad **Angle's Used:** 45° RL

NOTE: The plot shown is a reproduction of the actual profile and not to scale.

TOTAL EXAM VOLUME OBTAINED: 62.5%

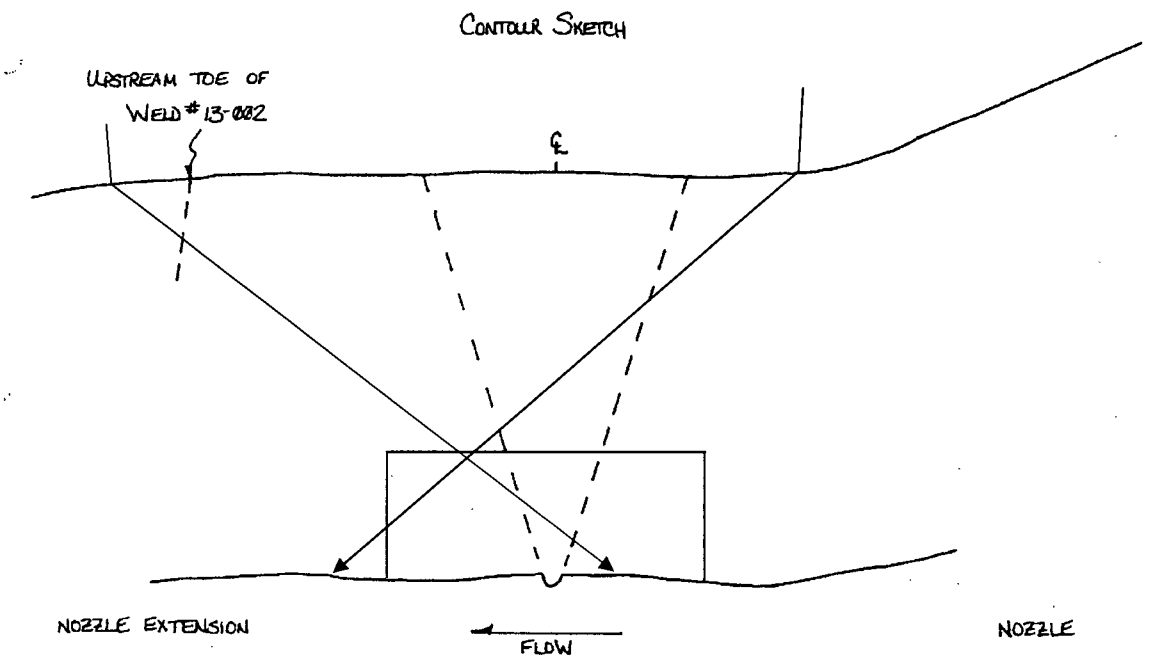

COMMENTS: Scanning limited to the Nozzle Extension side only due to the nozzle OD configuration and the proximity of weld 13-002 in the scan path for 13-001. These limitations reduced the scanning coverage 50% in one direction only.

Entergy

EXAMINATION COVERAGE PROFILE

Attachment #: 15-006	☐ ANO 1	☐ ANO 2	☐ GGNS	☐ RBS	■ W3

Component ID: 15-006 **Report No.:** 2000-421 **Material Type:** SS .

Pipe Diameter.: 2" **Sch/ T:** 1.071" **Angle's Used:** 45° S, 60°S, 45° RL, 60° RL,

NOTE: The plot shown is an electronic representation of the actual profile and not to scale.

TOTAL EXAM VOLUME OBTAINED: 85.5%

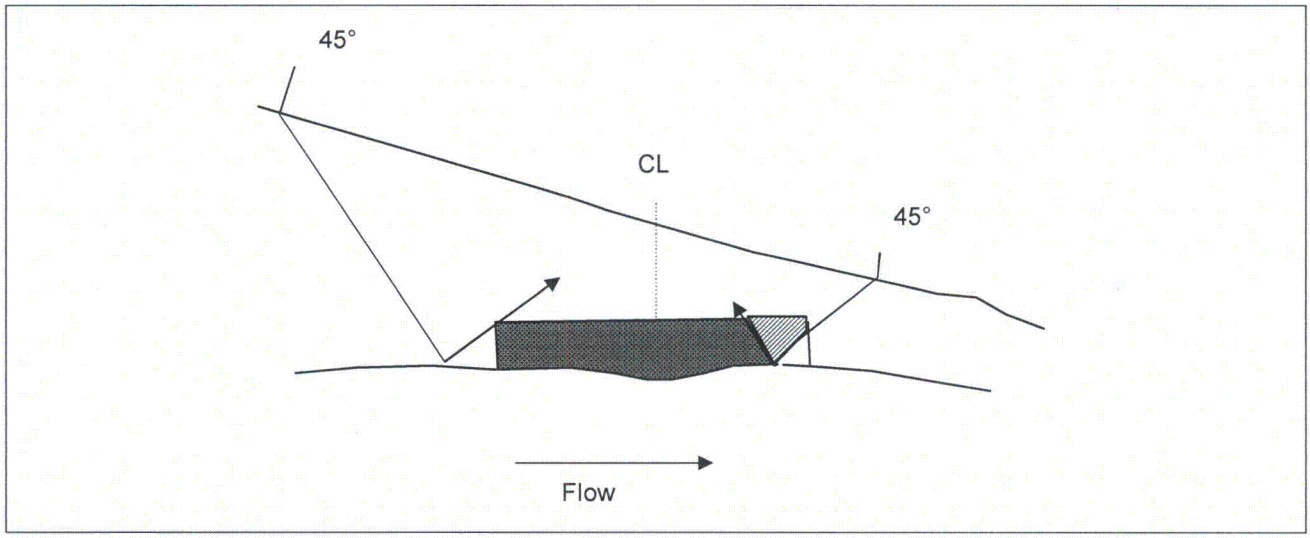

No Coverage Direction #1 Full Coverage

COMMENTS: Examination limited on safe end side of weld due to adjacent safe end to pipe weld.

NOTE: Per MRP-139 Inspection, this weld had a full structural overlay installed in RFO-15.

Entergy

EXAMINATION COVERAGE PROFILE

Attachment #: 15-011	☐ ANO 1	☐ ANO 2	☐ GGNS	☐ RBS	■ W3

Component ID: 15-011 **Report No.:** ISI-UT-08-080 . **Material Type:** CS

Configuration: Pipe to 45° Elbow **Pipe Diameter.:** 42" **Sch/ T:** 4.14"

Angle's Used: 45°S, 60°S

NOTE: The plot shown is an electronic representation of the actual profile and not to scale.

TOTAL EXAM VOLUME OBTAINED: 84%

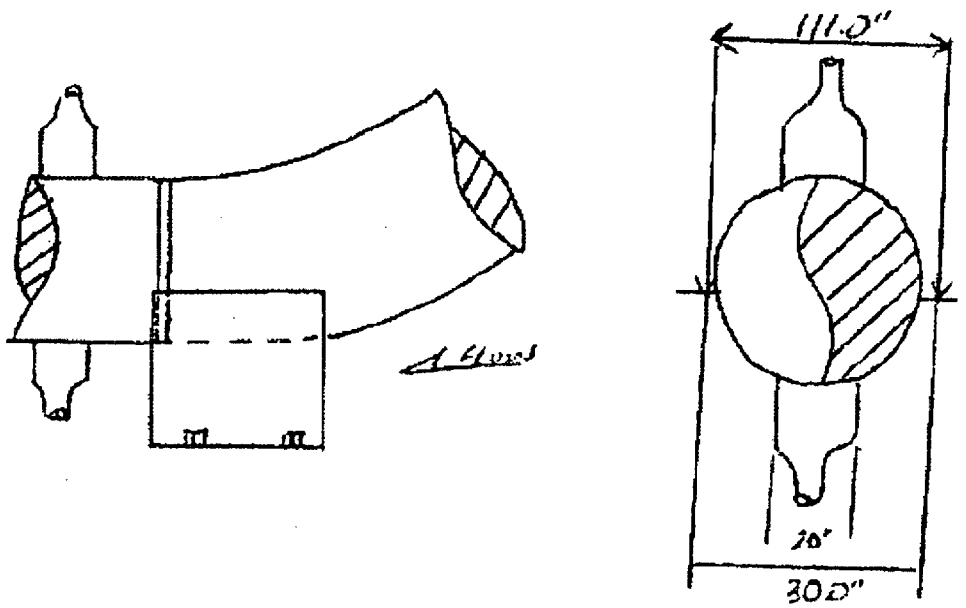

COMMENTS: Limited up stream scan due to permanent Concrete saddle type support and down stream limitation due to Shutdown cooling nozzle and surge nozzle configuration.

Entergy

EXAMINATION COVERAGE PROFILE

Attachment #: 15-011	☐ ANO 1	☐ ANO 2	☐ GGNS	☐ RBS	■ W3

NOTE: The plot shown is an electronic representation of the actual profile and not to scale.

TOTAL EXAM VOLUME OBTAINED: 89%

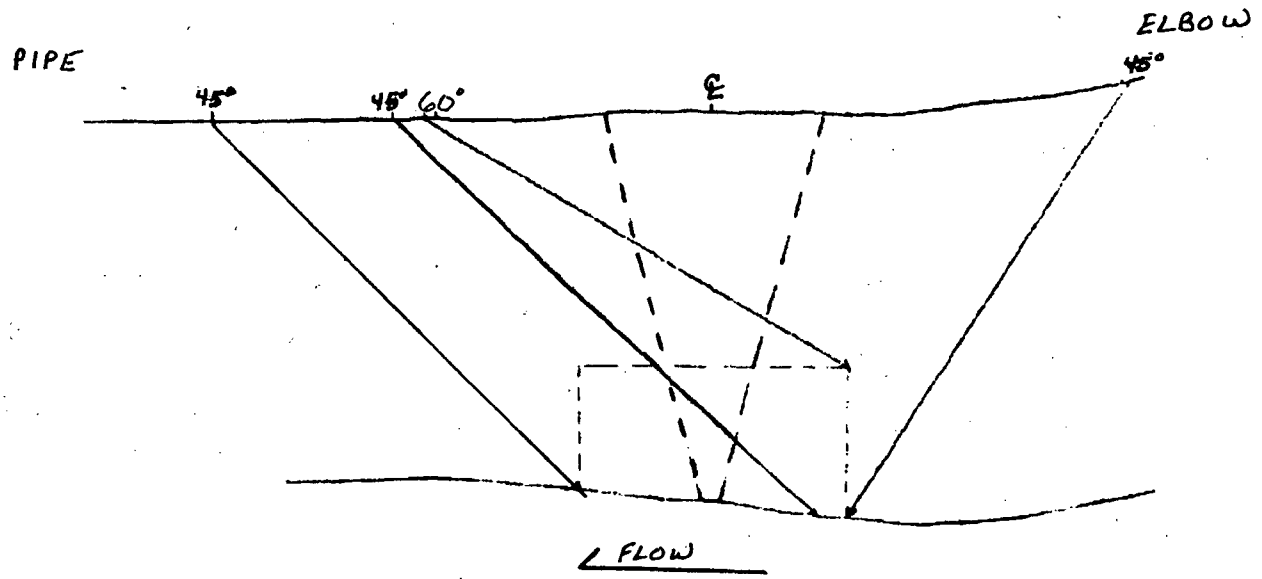

Page 2 of 2

Entergy

EXAMINATION COVERAGE PROFILE

Attachment #: 17-033	☐ ANO 1	☐ ANO 2	☐ GGNS	☐ RBS	■ W3

Component ID: 17-033 Report No.: 97-252 Material Type: SS .

Pipe Diameter.: 10" Sch/ T: .325" Angle's Used: 60° RL, 70°RL.

NOTE: The plot shown is a representation of the actual profile and not to scale.

TOTAL EXAM VOLUME OBTAINED: 57%

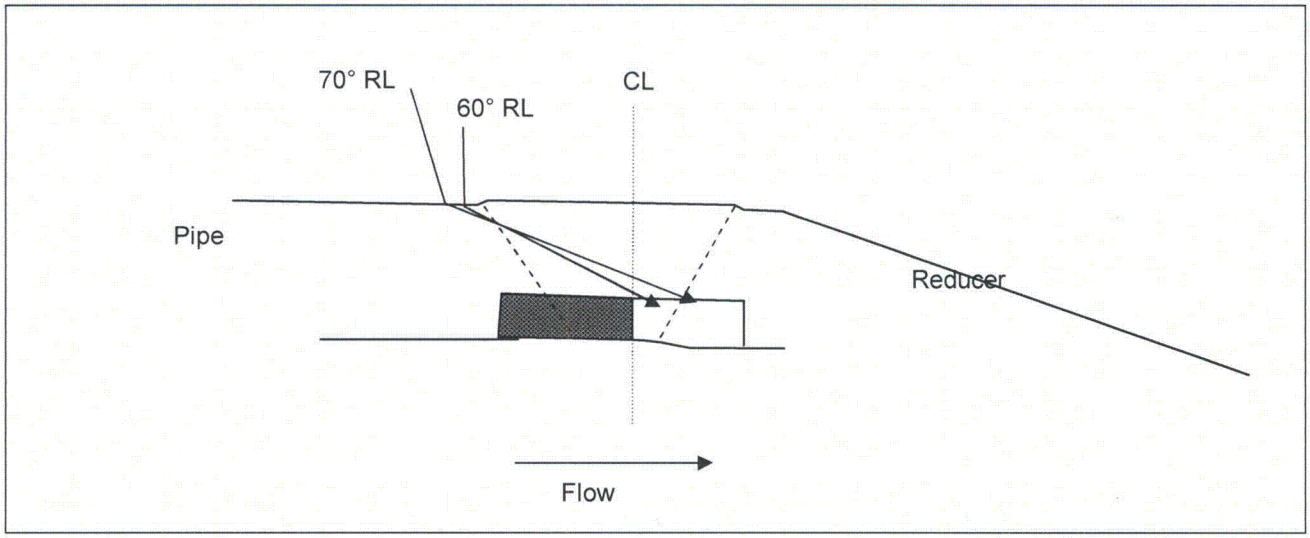

No Coverage Full Coverage

COMMENTS Examination limited on reducer side due to taper configuration 0.8" from weld toe.

Entergy

EXAMINATION COVERAGE PROFILE

Attachment #: 19-006	☐ ANO 1	☐ ANO 2	☐ GGNS	☐ RBS	■ W3

Component ID: 19-006 **Report No.:** 2000-284 **Material Type:** SS

Pipe Diameter.: 12" **Sch/ T:** 140 / 1.125" **Angle's Used:** 45°S,

NOTE: The plot shown is an electronic representation of the actual profile and not to scale.

TOTAL EXAM VOLUME OBTAINED: 50%

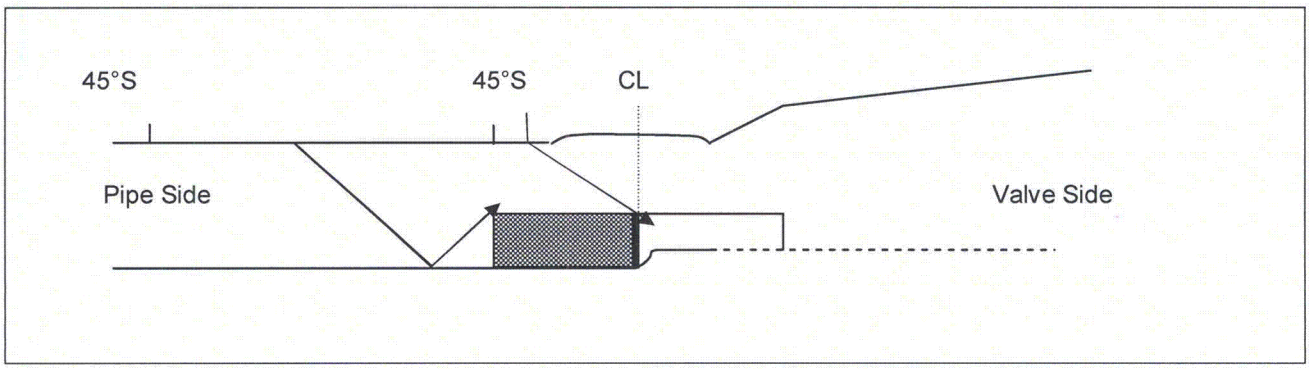

No Coverage Full Coverage

COMMENTS: Scanning limited to pipe side only, due to valve OD configuration.

Entergy

EXAMINATION COVERAGE PROFILE

Attachment #: 19-008	☐ ANO 1	☐ ANO 2	☐ GGNS	☐ RBS	■ W3

Component ID: 19-008 **Report No.:** 2003-439 . **Material Type:** SS .

Pipe Diameter.: 12" **Sch/ T:** 140 / 1.121" **Angle's Used:** 45°S, 60°RL

NOTE: The plot shown is an electronic representation of the actual profile and not to scale.

TOTAL EXAM VOLUME OBTAINED: 50%

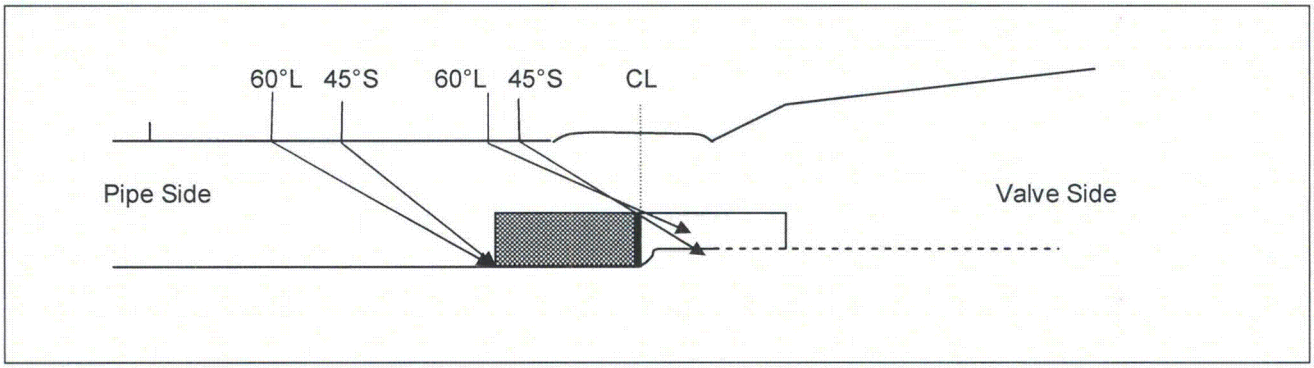

No Coverage Full Coverage

COMMENTS: Scanning limited to pipe side only, due to valve OD configuration.

Entergy

EXAMINATION COVERAGE PROFILE

Attachment #: 21-004	☐ ANO 1	☐ ANO 2	☐ GGNS	☐ RBS	■ W3

Component ID: 21-004 **Report No.:** ISI-UT-08-038 **Material Type:** SS

Configuration: Elbow to 14" pipe **Pipe Diameter.:** 14" **Sch/ T:** 1.27"

Angle's Used: 45°S, 60°S

NOTE: The plot shown is an electronic representation of the actual profile and not to scale.

TOTAL EXAM VOLUME OBTAINED: 50%

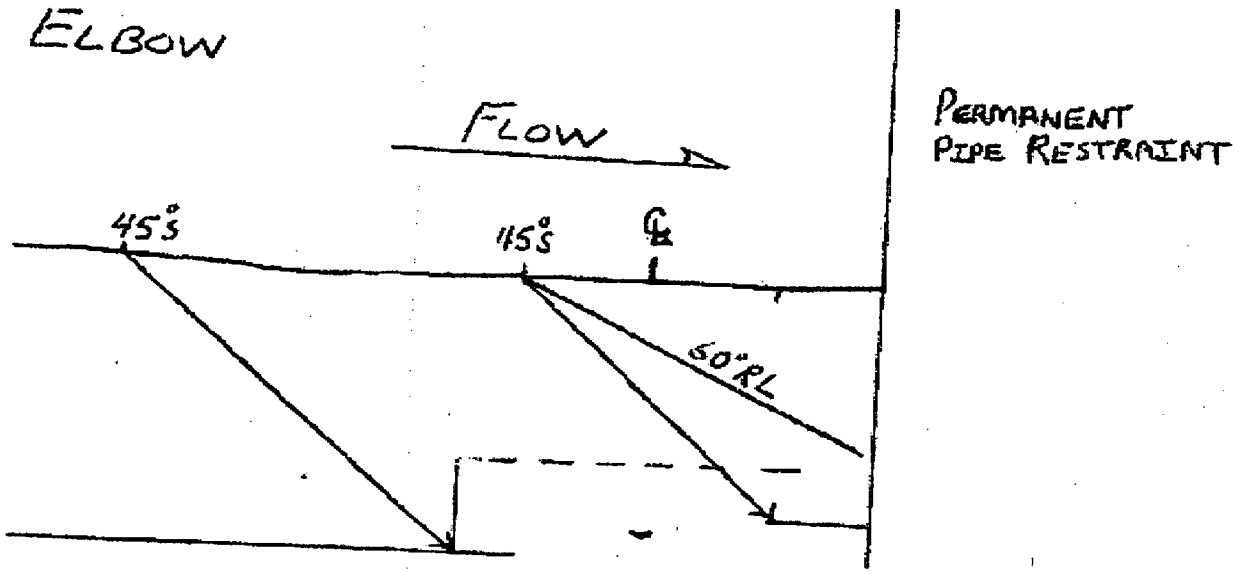

COMMENT: Limited access, single side examination due to permanent concrete saddle type support (permanent pipe restraint).

Entergy

EXAMINATION COVERAGE PROFILE

Attachment #: 21-066	☐ ANO 1	☐ ANO 2	☐ GGNS	☐ RBS	■ W3

Component ID: 21-066 **Report No.:** 2000-348 . **Material Type:** SS

Pipe Diameter.: 14" **Sch/ T:** 1.094" **Angle's Used:** 45°S, 60°S 70°S, 70°RL

NOTE: **The plot shown is an electronic representation of the actual profile and not to scale.**

TOTAL EXAM VOLUME OBTAINED: 50%

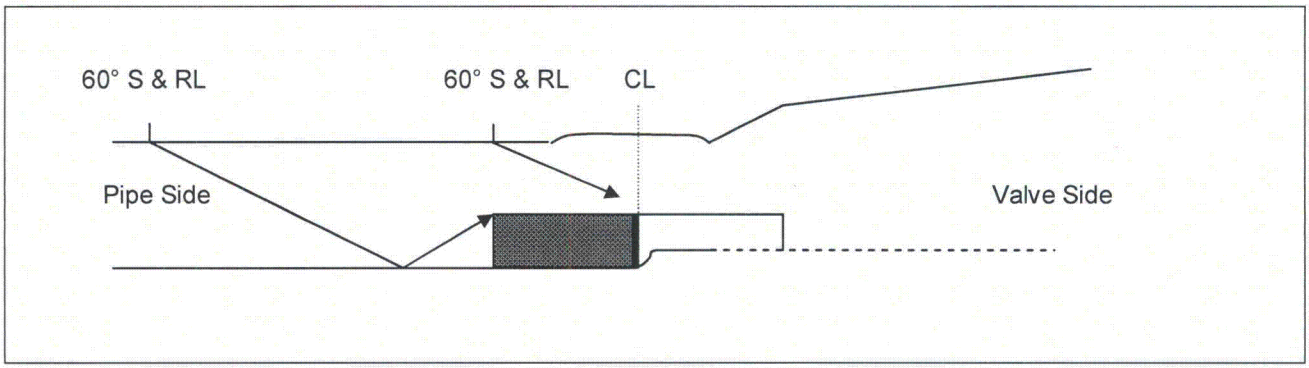

No Coverage Full Coverage

COMMENTS: Single sided examination due to valve configuration.

Entergy

EXAMINATION COVERAGE PROFILE

Attachment #: 22-023	☐ ANO 1	☐ ANO 2	☐ GGNS	☐ RBS	■ W3

Component ID: 22-023 Report No.: 2000-288 Material Type: SS .

Pipe Diameter.: 14" Sch/ T: 1.094" Angle's Used: 45°S, 60°S,

NOTE: The plot shown is an electronic reproduction of the actual profile and not to scale.

TOTAL EXAM VOLUME OBTAINED: 88%

COVERAGE PLOT FOR 22-023

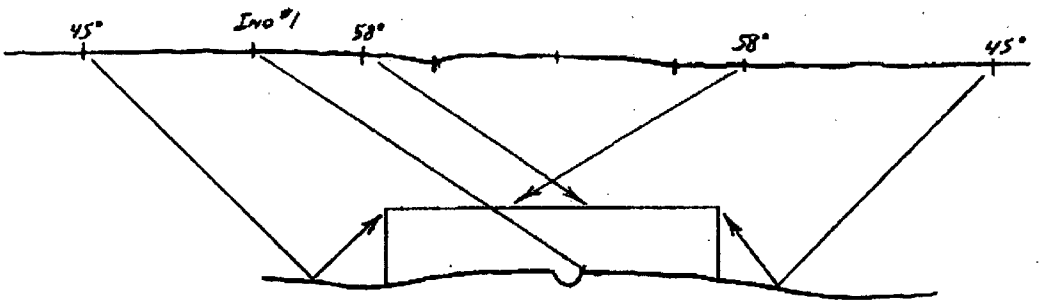

ELBOW PIPE

No Coverage Direction #1 Direction #2

COMMENTS: 10" of downstream side of the weld, near the intrados of the elbow, was not accessible due to penetration hole.

Entergy

EXAMINATION COVERAGE PROFILE

Attachment #: 25-009	☐ ANO 1	☐ ANO 2	☐ GGNS	☐ RBS	■ W3

Component ID: 25-009, 25-015 **Report No.:** 2000-177 & 431 . **Material Type:** SS .

Pipe Diameter.: 4" **Sch/ T:** 0.438" **Angle's Used:** 45°S, 60°S, 70° S.

NOTE: The plot shown is an electronic representation of the actual profile and not to scale.

TOTAL EXAM VOLUME OBTAINED: 75%

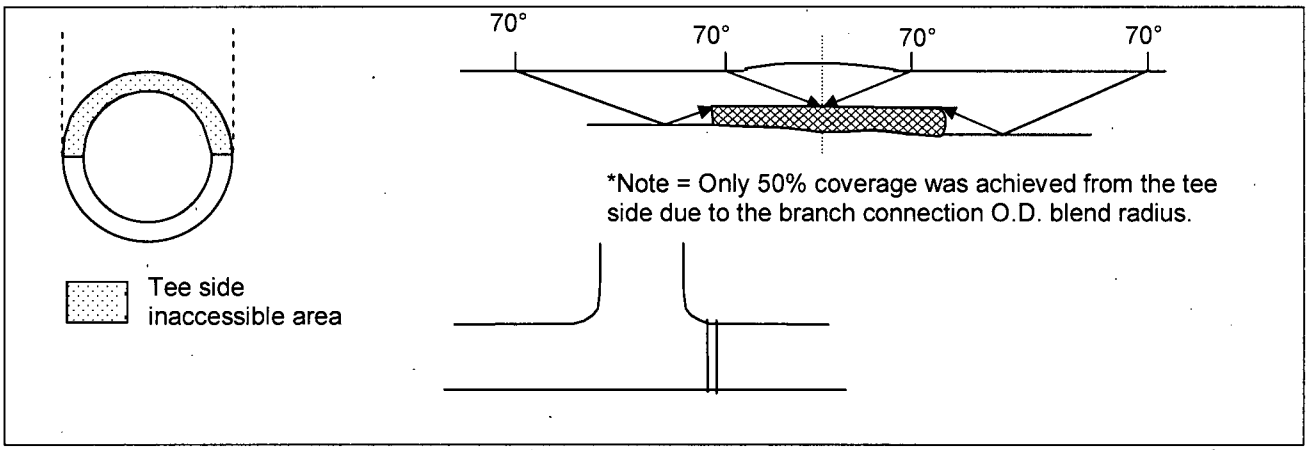

No Coverage Direction #1 Direction #2

COMMENTS:

25-009 Scanning limited to 50% circumference on tee side due to branch connection radius.

25-015: Scanning limited to 50% circumference on tee side due to branch connection radius.

EXAMINATION COVERAGE PROFILE

Attachment #: 25-016	☐ ANO 1	☐ ANO 2	☐ Grand Gulf	☐ River Bend	■ Waterford 3

Component ID: 25-016, 25-018 **Report No.:** 2000-177 . **Material Type:** SS .

Pipe Diameter.: 4" **Sch/ T:** 0.438" **Angle's Used:** 45°S, 60°S, 70° S

NOTE: **The plot shown is an electronic representation of the actual profile and not to scale.**

TOTAL EXAM VOLUME OBTAINED: 50%

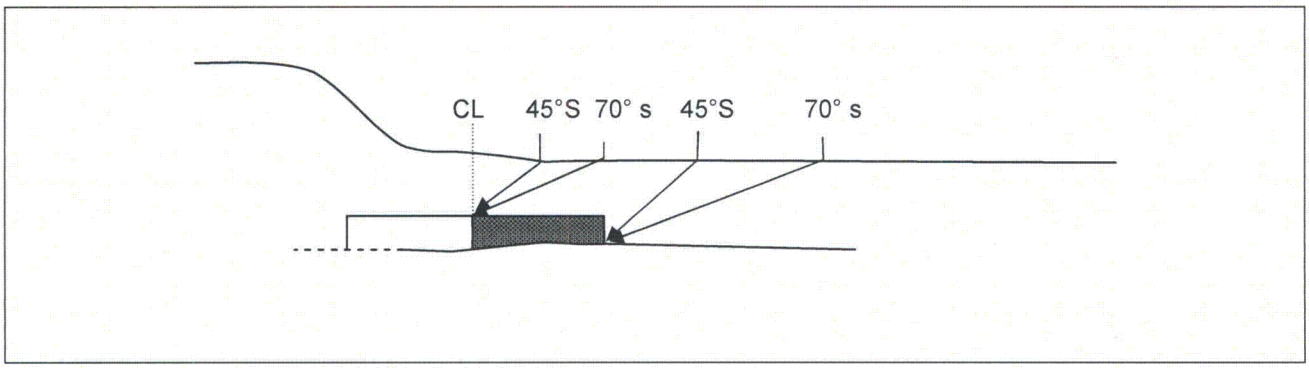

No Coverage Full Coverage

COMMENTS: Single sided examination due to valve configuration.

Entergy

EXAMINATION COVERAGE PROFILE

Attachment #: 25-019	☐ ANO 1	☐ ANO 2	☐ GGNS	☐ RBS	■ W3

Component ID: 25-019, 25-020 **Report No.:** 2000-177 **Material Type:** SS .

Pipe Diameter.: 4" **Sch/ T:** 0.438" **Angle's Used:** 45°S, 60°S, 70° S

NOTE: **The plot shown is a representation of the actual profile and not to scale.**

TOTAL EXAM VOLUME OBTAINED: 75%

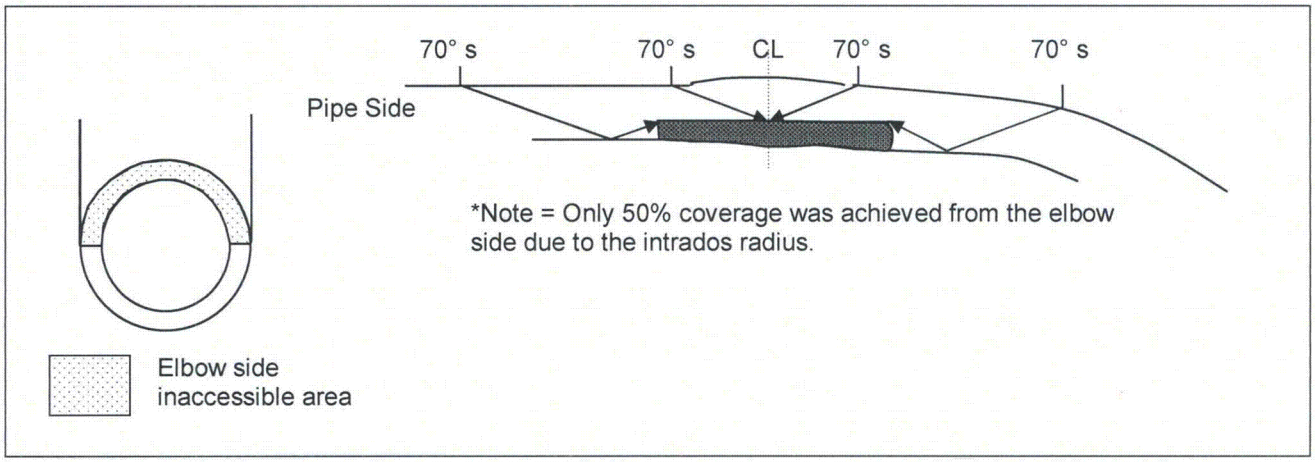

No Coverage

Full Coverage

COMMENTS: This plot represents the profile for components 25-019 and 25-020, which are 4" pipe-to-elbow configurations. The examination is limited due to the small radius on the intrados of the elbow. The pipe side of the exam is credited for 100% coverage. See note in profile box for elbow side limitation.

Entergy

EXAMINATION COVERAGE PROFILE

Attachment #: 25-022	☐ ANO 1	☐ ANO 2	☐ GGNS	☐ RBS	■ W3

Component ID: 25-022 **Report No.:** 2000-204 **Material Type:** SS

Pipe Diameter.: 4" **Sch/ T:** 0.438" **Angle's Used:** 45°S, 60°S, 70° S

NOTE: The plot shown is an electronic representation of the actual profile and not to scale.

TOTAL EXAM VOLUME OBTAINED: 62%

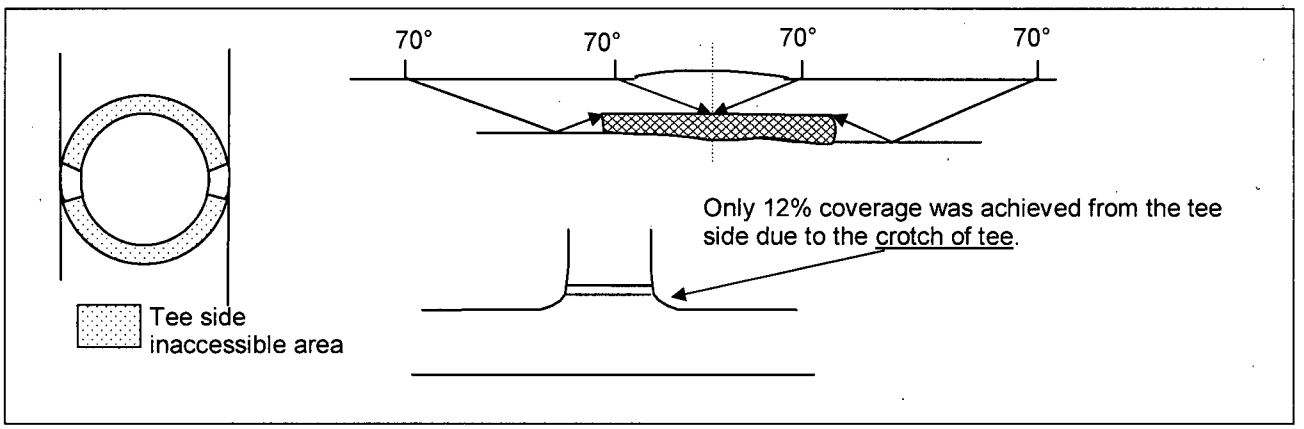

No Coverage Direction #1 Direction #2

COMMENTS: Scanning limited to 12% on tee side due to the radius of the tee.

EXAMINATION COVERAGE PROFILE

Attachment #: 26-001	☐ ANO 1	☐ ANO 2	☐ GGNS	☐ RBS	■ W3

Component ID: 26-001 **Report No.:** 2000-479 **Material Type:** SS/CS

Pipe Diameter.: 8" **Sch/ T:** 1.61" **Angle's Used:** 60° RL, 45° RL

NOTES: **The plot shown is an electronic representation of the actual profile and not to scale.**

TOTAL EXAM VOLUME OBTAINED: 70%

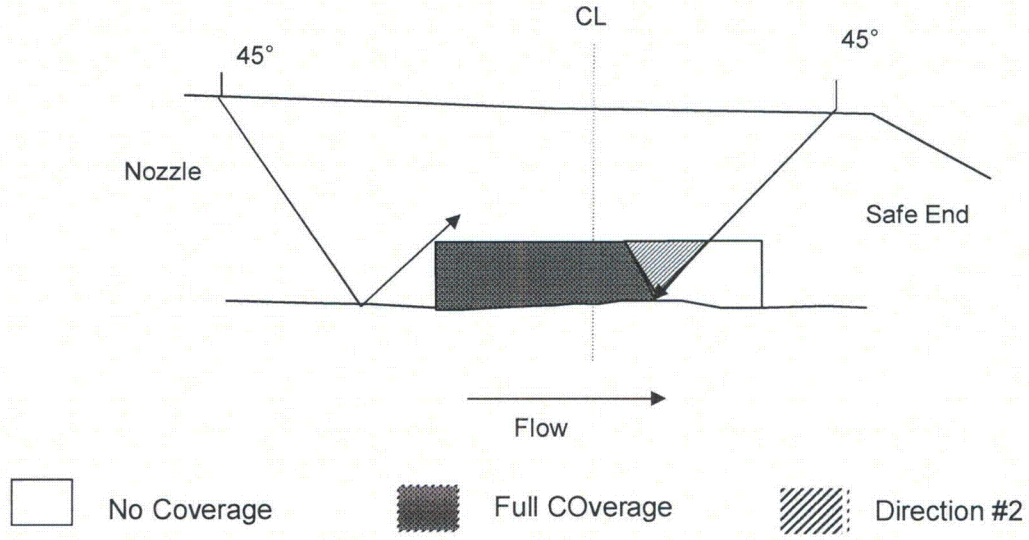

COMMENTS: Scanning limited on reducer side due to OD taper near the weld toe.

NOTE: Per MRP-139 Inspection, 26-006 had a full structural weld overlay installed in RFO-15.

Entergy

EXAMINATION COVERAGE PROFILE

Attachment #: 26-002	☐ ANO 1	☐ ANO 2	☐ GGNS	☐ RBS	■ W3

Component ID: 26-002 Report No.: 2000-171 Material Type: SS

Pipe Diameter.: 8" Sch/ T: 0.78" Angle's Used: 45°S, 60°S, 70° S

NOTE: The plot shown is an electronic representation of the actual profile and not to scale.

TOTAL EXAM VOLUME OBTAINED: 50%

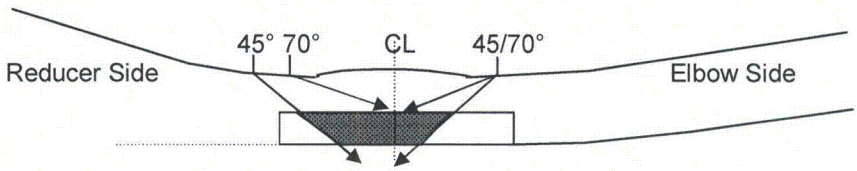

No Coverage Full Coverage

COMMENTS: Scanning limited on both sides of weld due to elbow to reducer OD configuration.

EXAMINATION COVERAGE PROFILE

Attachment #: 26-006	☐ ANO 1	☐ ANO 2	☐ GGNS	☐ RBS	■ W3

Component ID: 26-006 **Report No.:** 2000-467 **Material Type:** SS/CS

Pipe Diameter.: 8" **Sch/ T:** 1.61" **Angle's Used:** 60° RL, 45° RL, 45°S

NOTES: **The plot shown is an electronic representation of the actual profile and not to scale.**

TOTAL EXAM VOLUME OBTAINED: 63%

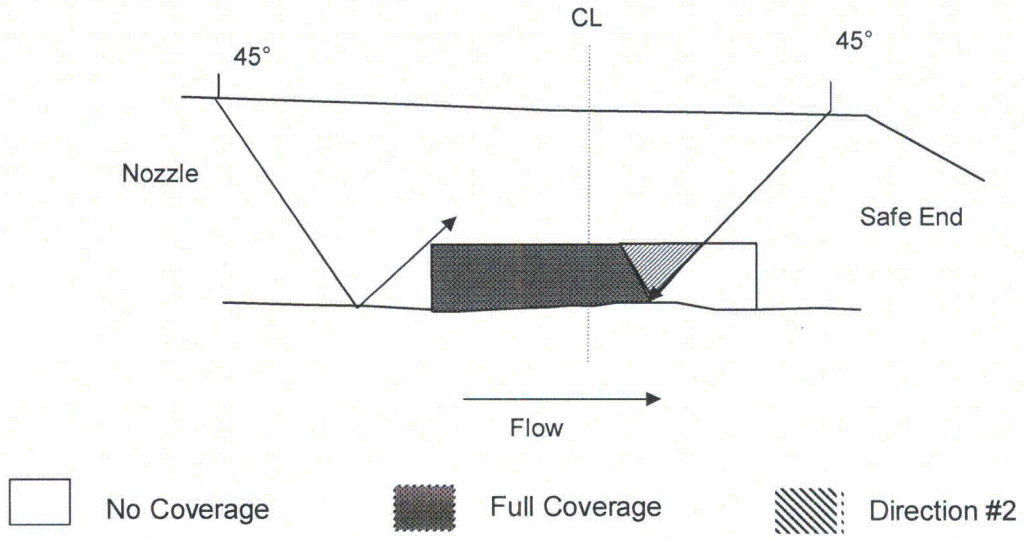

COMMENTS: Scan coverage limited on the reducing safe end side, due to OD configuration.

NOTE: **Per MRP-139 Inspection, 26-006 had a full structural weld overlay installed in RFO-15.**

EXAMINATION COVERAGE PROFILE

Attachment #: 26-007	☐ ANO 1	☐ ANO 2	☐ GGNS	☐ RBS	■ W3

Component ID: 26-007 Report No.: 2000-171 Material Type: SS .

Pipe Diameter.: 8" Sch/ T: 0.78" Angle's Used: 45°S, 60°S, 70° S

NOTE: The plot shown is an electronic representation of the actual profile and not to scale.

TOTAL EXAM VOLUME OBTAINED: 52%

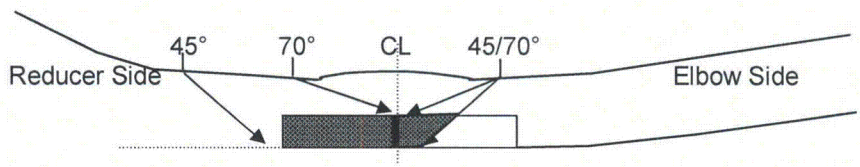

Full Coverage No Coverage

COMMENTS: Scanning limited on both side of weld due to elbow to reducer OD configuration.

EXAMINATION COVERAGE PROFILE

Attachment #: 27-002	☐ ANO 1	☐ ANO 2	☐ GGNS	☐ RBS	■ W3

Component ID: 27-002, 004, 005, 006, 007, 008, 009 **Report No.:** 2000-192 **Material Type:** SS

Pipe Diameter.: 2" **Sch/ T:** 0.380" **Angle's Used:** 45°S, 60°S, 70° S, 70° RL

NOTE: The plot shown is an electronic representation of the actual profile and not to scale.

TOTAL EXAM VOLUME OBTAINED: 75%

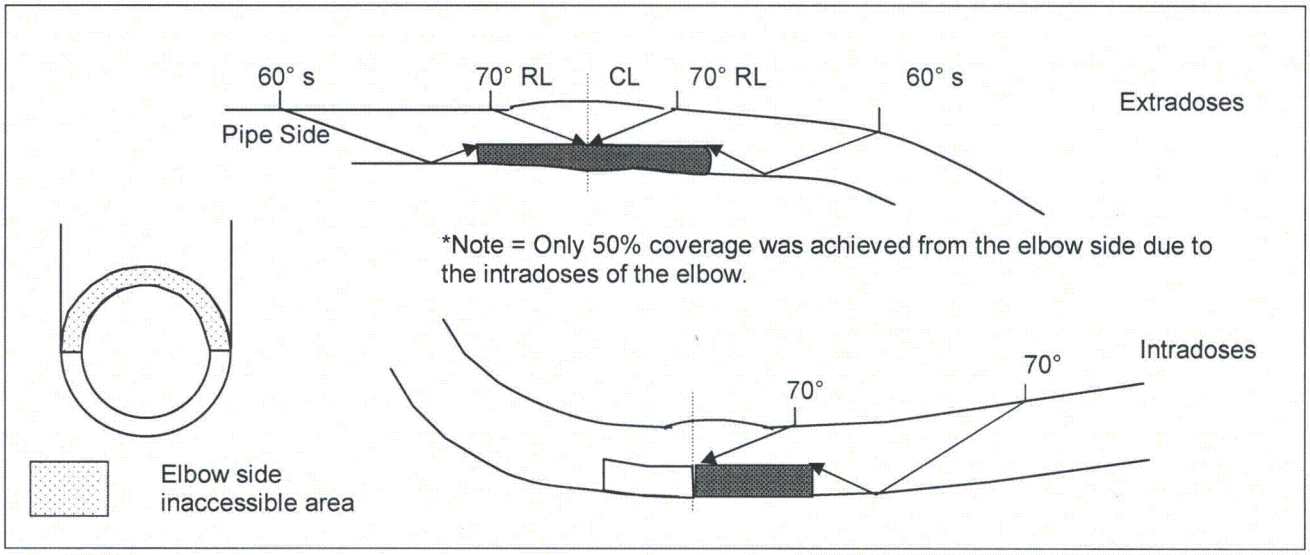

No Coverage

Direction #1

COMMENTS: Scanning limited to 50% circumference on the elbow side due to the intrados radius.

Entergy

EXAMINATION COVERAGE PROFILE

Attachment #: 27-010	☐ ANO 1	☐ ANO 2	☐ GGNS	☐ RBS	■ W3

Component ID: 27-010, 27-011, 27-038 **Report No.:** 2000-294 . **Material Type:** SS .

Pipe Diameter.: 2" **Sch/ T:** 0.380" **Angle's Used:** 45°S, 60°S, 70°S, 70°RL

NOTE: The plot shown is an electronic representation of the actual profile and not to scale.

TOTAL EXAM VOLUME OBTAINED: 75%

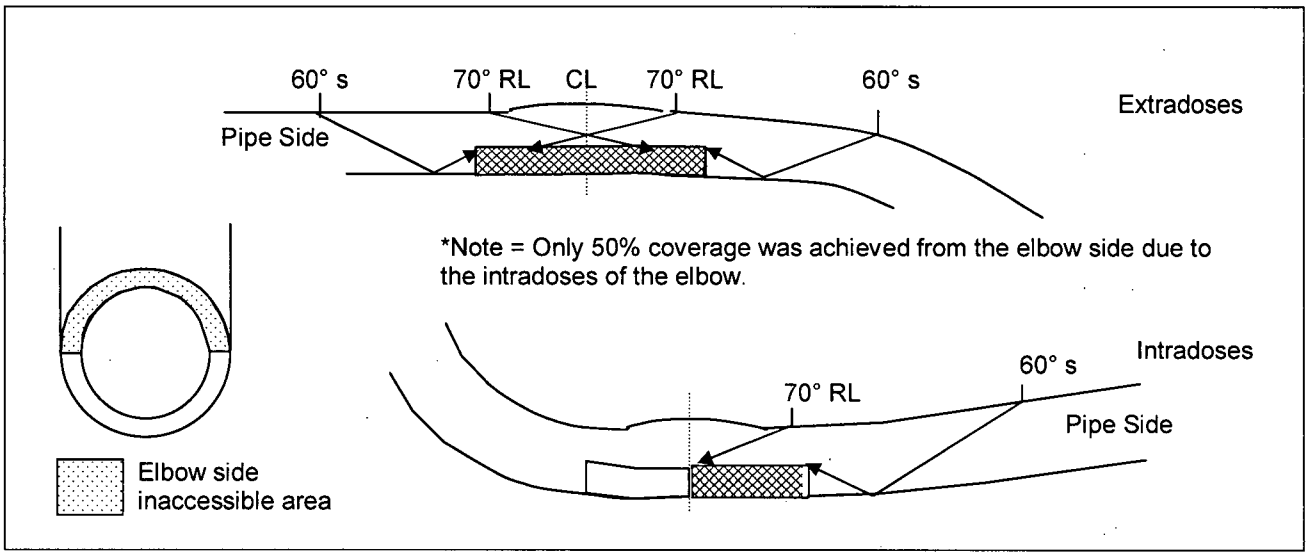

No Coverage Direction #1 Direction #2

COMMENTS: Scanning limited to 50% circumference on the elbow side due to the intrados radius.

EXAMINATION COVERAGE PROFILE

Attachment #: 27-037	☐ ANO 1	☐ ANO 2	☐ GGNS	☐ RBS	■ W3

Component ID: 27-037 **Report No.:** 2000-294 **Material Type:** SS

Pipe Diameter.: 2" **Sch/ T:** 0. 380" **Angle's Used:** 45°S, 60°S, 70°S, 70° RL

NOTE: **The plot shown is an electronic representation of the actual profile and not to scale.**

TOTAL EXAM VOLUME OBTAINED: 62%

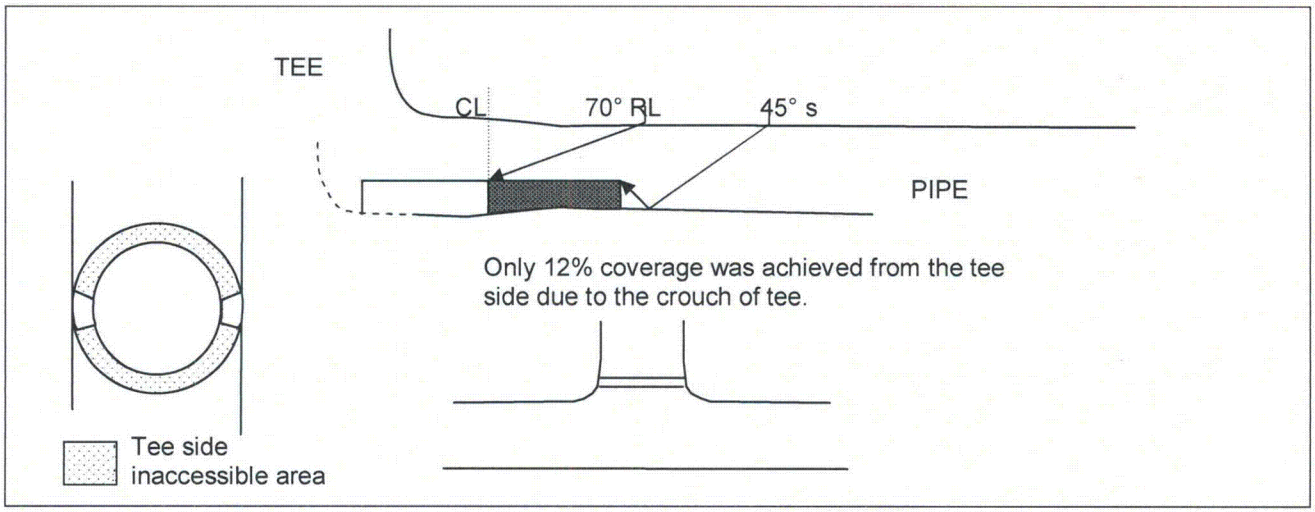

No Coverage Full Coverage

COMMENTS: Scanning limited to 12% on tee side due to the radius of the tee.

Entergy

EXAMINATION COVERAGE PROFILE

Attachment #: 27-054	☐ ANO 1	☐ ANO 2	☐ GGNS	☐ RBS	■ W3

Component ID: 27-054, 27-055 **Report No.:** 2000-303 **Material Type:** SS

Pipe Diameter.: 2" **Sch/ T:** 0.380" **Angle's Used:** 45°S, 60°S, 70° S

NOTE: **The plot shown is an electronic representation of the actual profile and not to scale.**

TOTAL EXAM VOLUME OBTAINED: 75%

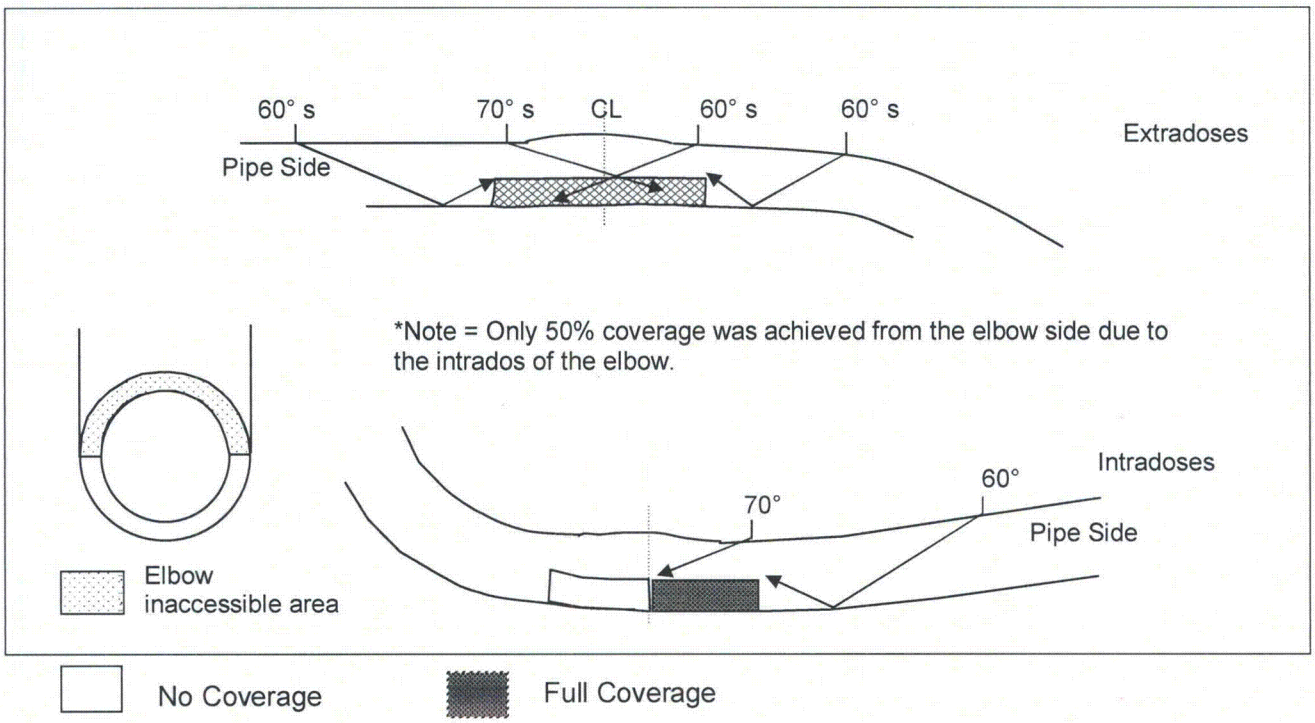

No Coverage

Full Coverage

COMMENTS: Scanning limited to 50% circumference on the elbow side due to the intrados radius.

EXAMINATION COVERAGE PROFILE

Attachment #: 28-001	☐ ANO 1	☐ ANO 2	☐ GGNS	☐ RBS	■ W3

Component ID: 28-001, 28-002, 28-008, 28-009, 28-077, 28-078 **Report No.:** 2000-161

Material Type: SS **Pipe Diameter.:** 2" **Sch/ T:** 0.380"

Angle's Used: 45°S, 60°S, 70° S

NOTE: The plot shown is an electronic representation of the actual profile and not to scale.

TOTAL EXAM VOLUME OBTAINED: 75%

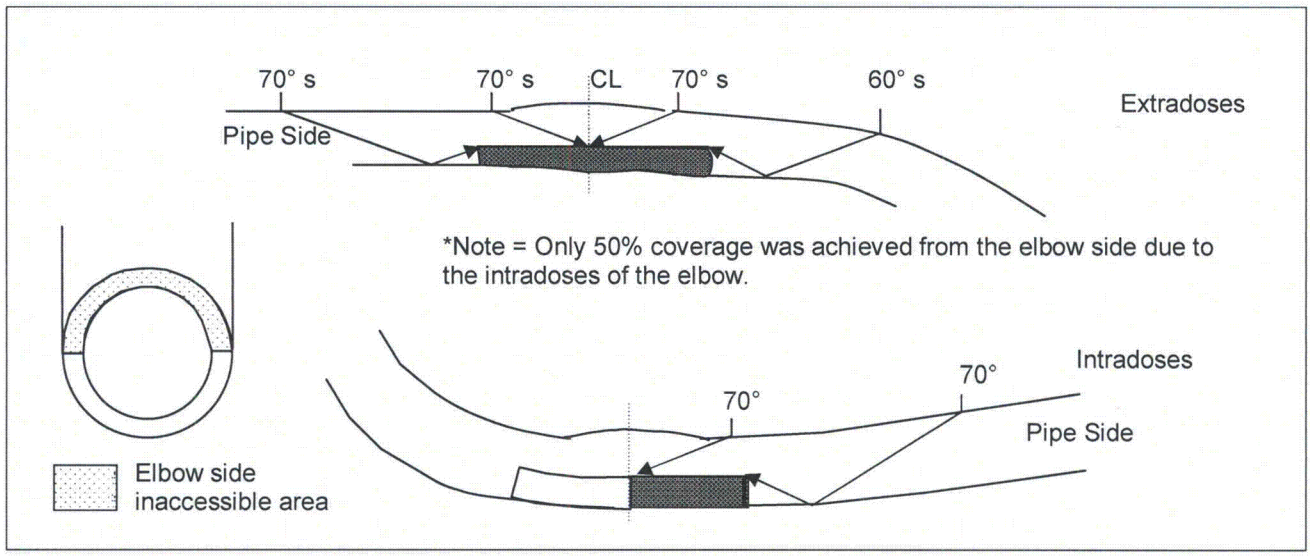

No Coverage Full Coverage

COMMENTS: Scanning limited to 50% circumference on the elbow side due to the intrados radius.

EXAMINATION COVERAGE PROFILE

Attachment #: 28-012	☐ ANO 1	☐ ANO 2	☐ GGNS	☐ RBS	■ W3

Component ID: 28-012 **Report No.:** 2000-162 **Material Type:** SS

Pipe Diameter.: 2" **Sch/ T:** 0.480" **Angle's Used:** 45S°, 60°S, 70° S

NOTE: The plot shown is a representation of the actual profile and not to scale.

TOTAL EXAM VOLUME OBTAINED: 70%

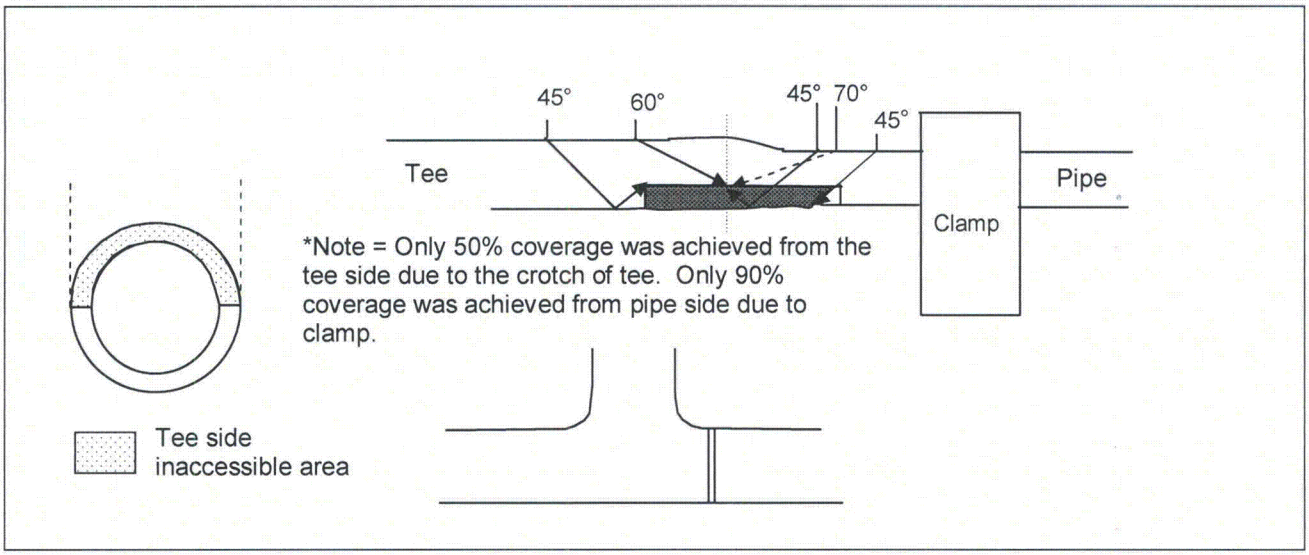

No Coverage Full Coverage

COMMENTS: Scanning limited to 50% circumference on tee side due to branch connection radius. Scanning limited to 90% on pipe side due to an adjacent clamp.

Entergy

EXAMINATION COVERAGE PROFILE

Attachment #: 28-013	☐ ANO 1	☐ ANO 2	☐ GGNS	☐ RBS	■ W3

Component ID: 28-013, 28-074, 28-075 **Report No.:** 2000-161 **Material Type:** SS

Pipe Diameter.: 2" **Sch/ T:** 0.380" **Angle's Used:** 45°S, 60°S, 70° S

NOTE: The plot shown is an electronic representation of the actual profile and not to scale.

TOTAL EXAM VOLUME OBTAINED: 75%

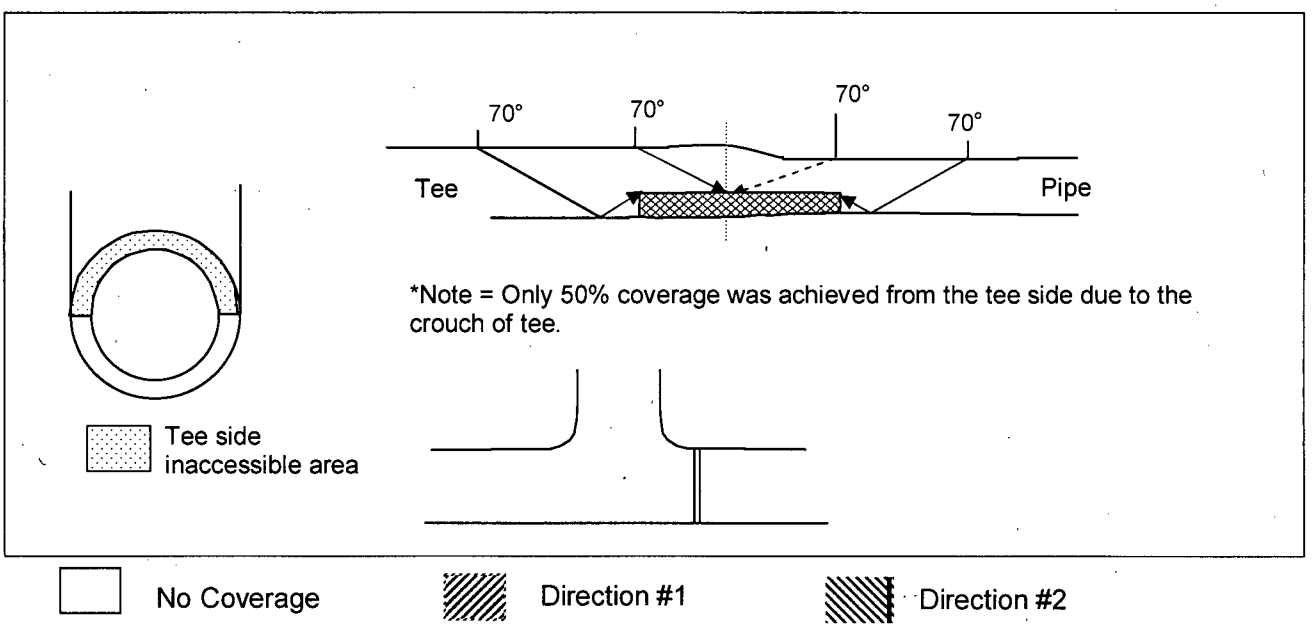

No Coverage Direction #1 Direction #2

COMMENTS: Scanning limited to 50% circumference on tee side due to branch connection radius.

Entergy

EXAMINATION COVERAGE PROFILE

Attachment #: 28-016	☐ ANO 1	☐ ANO 2	☐ GGNS	☐ RBS	■ W3

Component ID: 28-016 **Report No.:** 2000-162 **Material Type:** SS

Pipe Diameter.: 2" **Sch/ T:** 0.480" **Angle's Used:** 45°S, 60°S, 70° S

NOTE: The plot shown is a representation of the actual profile and not to scale.

TOTAL EXAM VOLUME OBTAINED: 51%

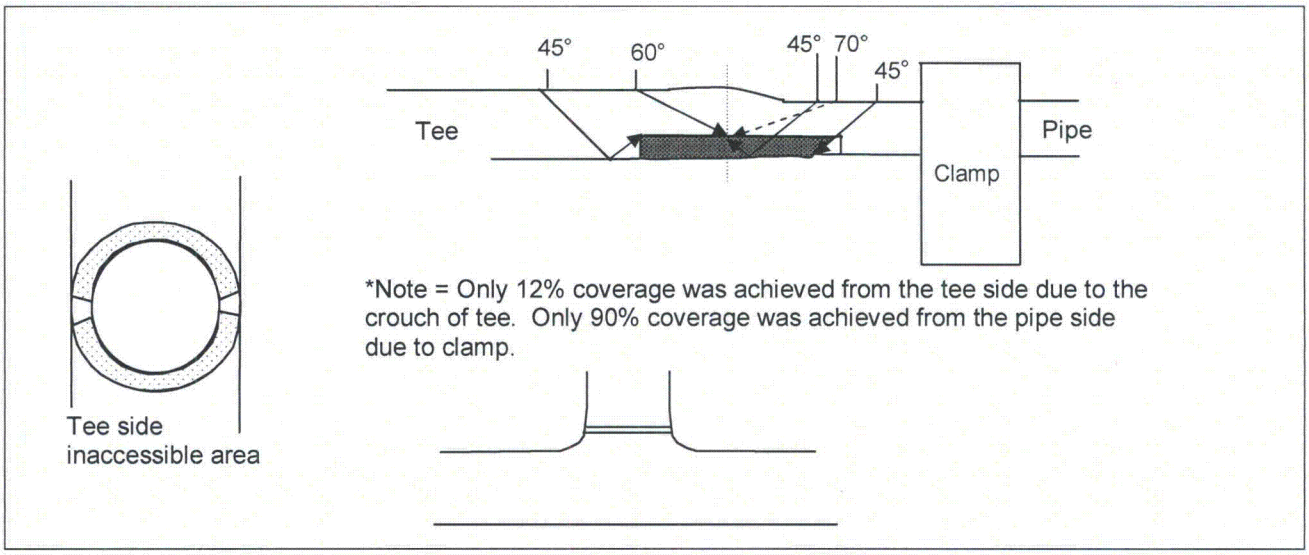

No Coverage Full Coverage

COMMENTS: Scanning limited to 12% on tee side due to the radius of the tee. Scanning limited to 90% on branch connection side due to an adjacent clamp.

Entergy

EXAMINATION COVERAGE PROFILE

Attachment #: 28-076	☐ ANO 1	☐ ANO 2	☐ GGNS	☐ RBS	■ W3

Component ID: 28-076 **Report No.:** 2000-161 **Material Type:** SS

Pipe Diameter.: 2" **Sch/ T:** 0.380" **Angle's Used:** 45°S, 60°S, 70° S

NOTE: The plot shown is an electronic representation of the actual profile and not to scale.

TOTAL EXAM VOLUME OBTAINED: 62%

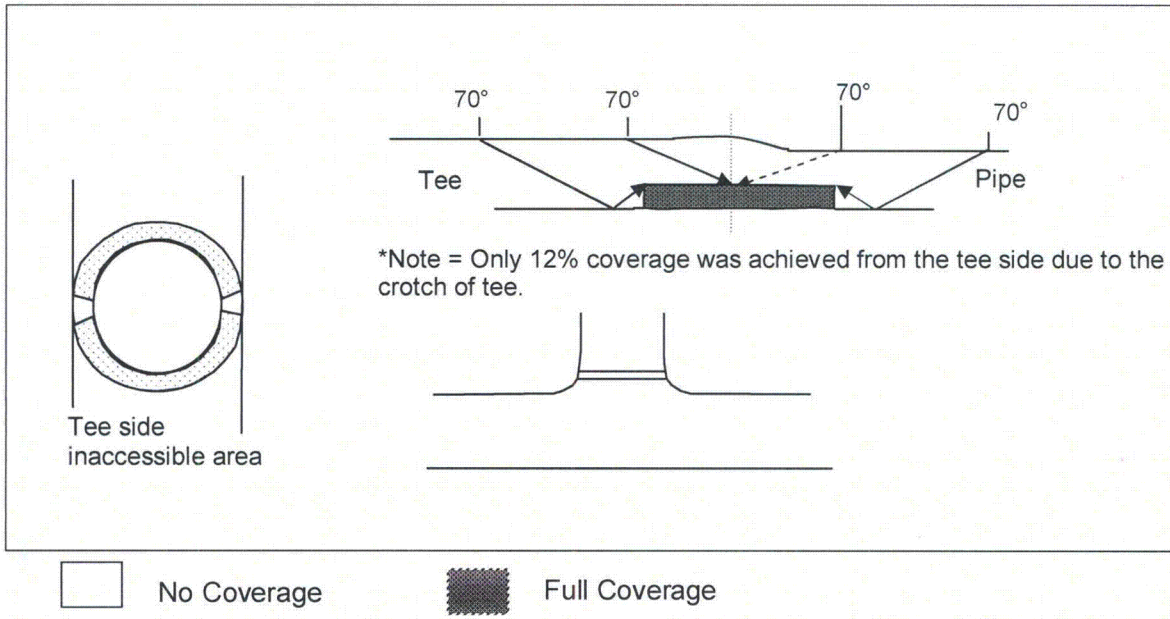

No Coverage Full Coverage

COMMENTS: Scanning limited to 12% on tee side due to the radius of the tee.

Entergy

EXAMINATION COVERAGE PROFILE

Attachment #: 52-004	☐ ANO 1	☐ ANO 2	☐ GGNS	☐ RBS	■ W3

Component ID: 52-004 **Report No.:** ISI-UT-05-044 **Material Type:** SS .

Pipe Diameter.: 14" **Sch/ T:** 1.14" **Angle's Used:** 45°S, 60°S, 60RL, 70°S

NOTE: **The plot shown is an electronic representation of the actual profile and not to scale.**

TOTAL EXAM VOLUME OBTAINED: 50%

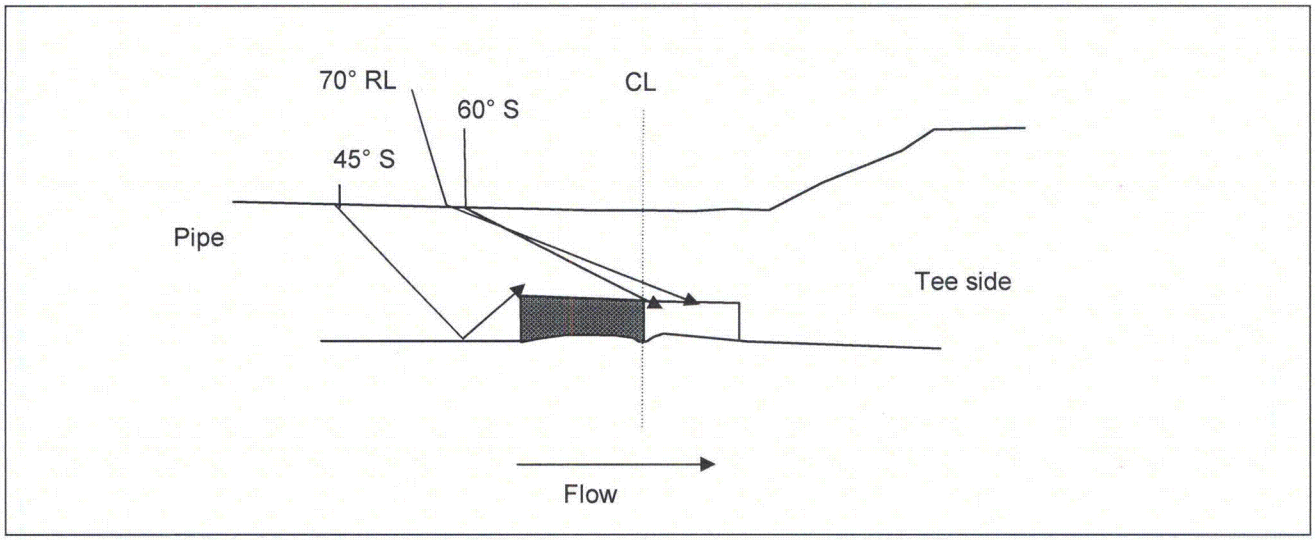

No Coverage Full Coverage

COMMENTS: Scanning limited to elbow side only, due to tee OD configuration.

Entergy

EXAMINATION COVERAGE PROFILE

Attachment #: 54-043	☐ ANO 1	☐ ANO 2	☐ GGNS	☐ RBS	■ W3

Component ID: 54-043 **Report No.:** 2003-154 **Material Type:** SS

Pipe Diameter.: 10" **Sch/ T:** .325" **Angle's Used:** 45° S, 60° RL, 70° S

NOTE: The plot shown is an electronic representation of the actual profile and not to scale.

TOTAL EXAM VOLUME OBTAINED: 50%

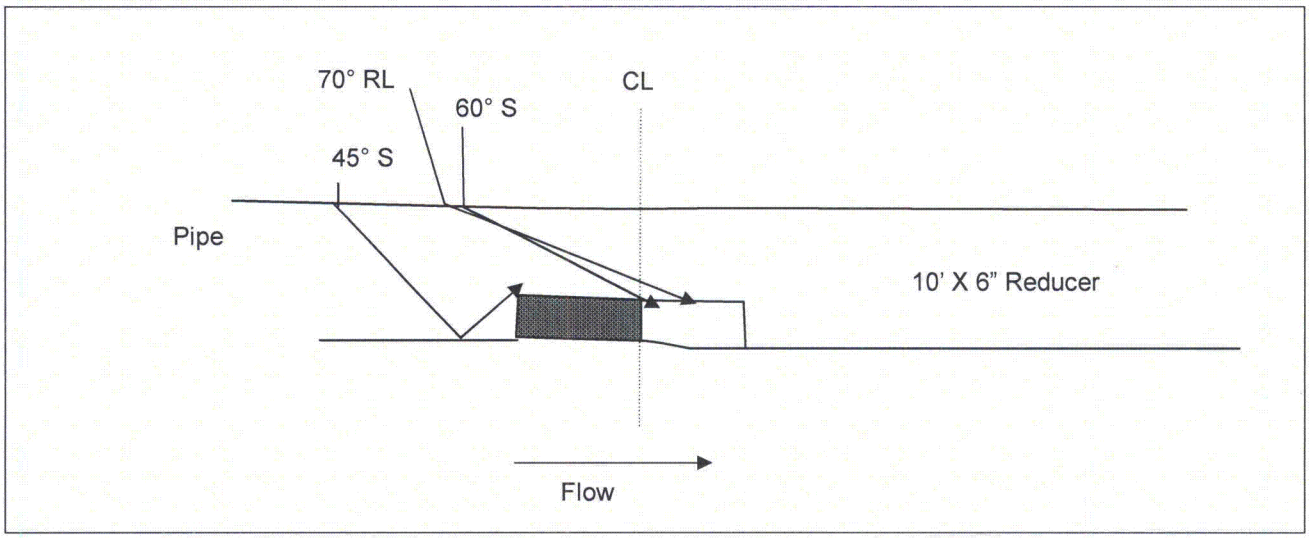

No Coverage Full Coverage

COMMENTS: Scanning limited to pipe side due to reducer OD configuration. No coverage on the down stream side due to OD configuration.

Entergy

EXAMINATION COVERAGE PROFILE

Attachment #: 54-074	☐ ANO 1	☐ ANO 2	☐ GGNS	☐ RBS	■ W3

Component ID: 54-074 **Report No.:** ISI UT 07-009 **Material Type:** SS .

Vessel Diameter.: 45" **Sch/ T:** 1.56" **Angle's Used:** 45° S, 60° S, 70° RL

Description: Shut Down Cooling Heat Exchanger "B" Shell to Flange Weld

NOTE: This is an electronic representation of the actual profile and not to scale.

TOTAL EXAM VOLUME OBTAINED: 88%

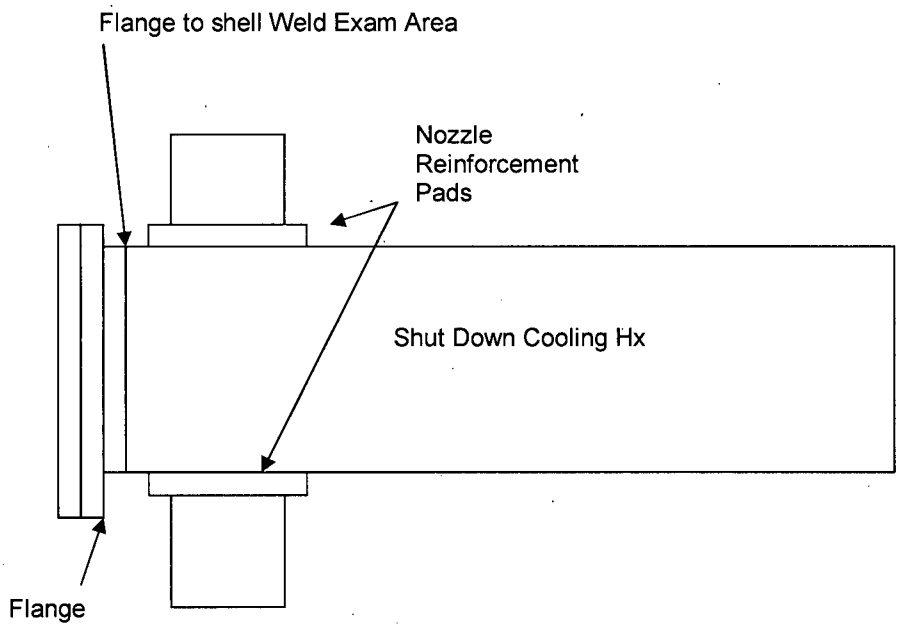

COMMENTS: Configuration of top and bottom nozzle saddle weld and the horizontal shell weld limit this exam. Scanning the circumferential Flange to shell weld on the SDC "B" Hx is limited by the nozzle reinforcement pads welded to the shell of the hx at the 0° and 180°. The short neck flange itself creates additional scanning limitations for 360° around this weld.

Entergy

EXAMINATION COVERAGE PROFILE

Attachment #: 54-074	☐ ANO 1	☐ ANO 2	☐ GGNS	☐ RBS	■ W3

Component ID: 54-074

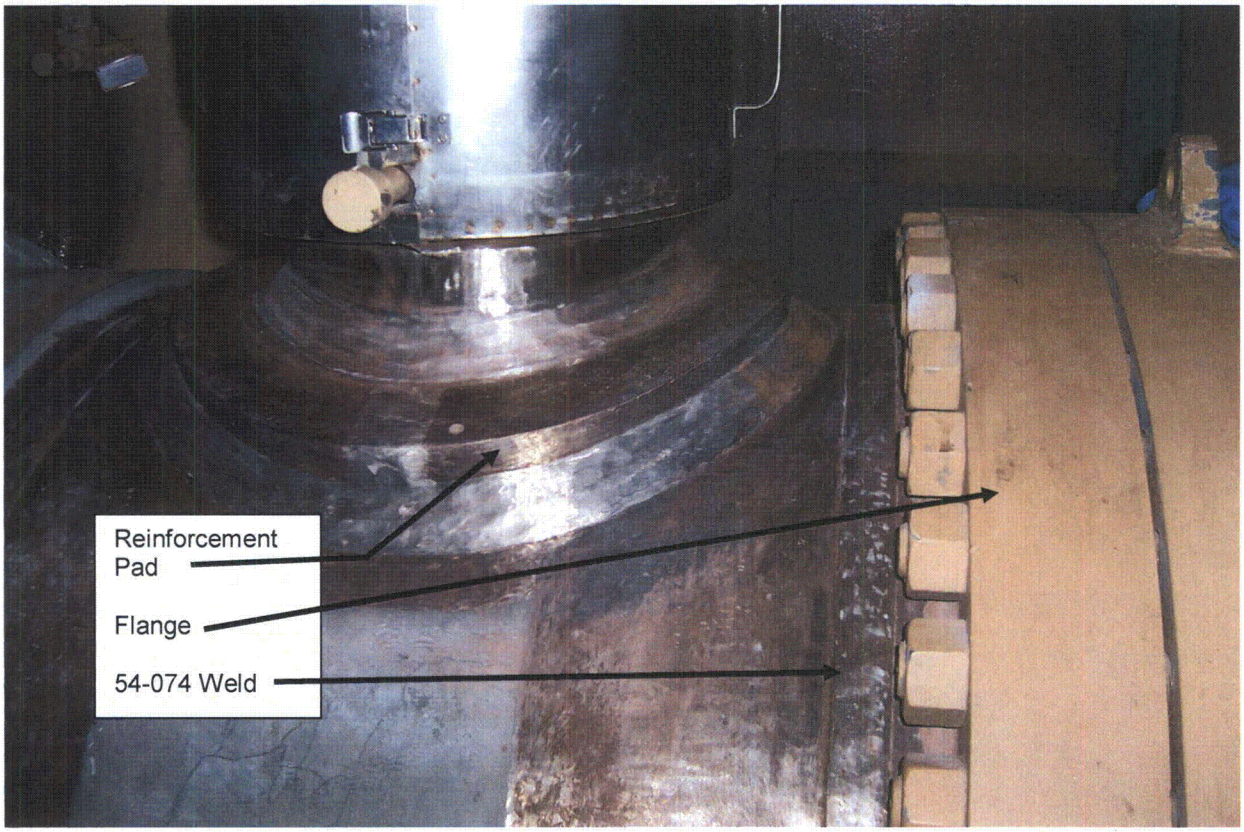

COMMENTS: This is typical on the top and bottom of the vessel (0° and 180°).

Entergy

EXAMINATION COVERAGE PROFILE

Attachment #: 54-075	☐ ANO 1	☐ ANO 2	☐ GGNS	☐ RBS	■ W3

Component ID: 54-075 **Report No.:** ISI UT 07-010 **Material Type:** SS .

Vessel Diameter.: 45" **Sch/ T:** 1.56" **Angle's Used:** 45° S, 60° S, 70° RL

Description: Shut Down Cooling Heat Exchanger "B" Tube sheet to Shell Weld

NOTE: This is an electronic representation of the actual profile and not to scale.

TOTAL EXAM VOLUME OBTAINED: 85%

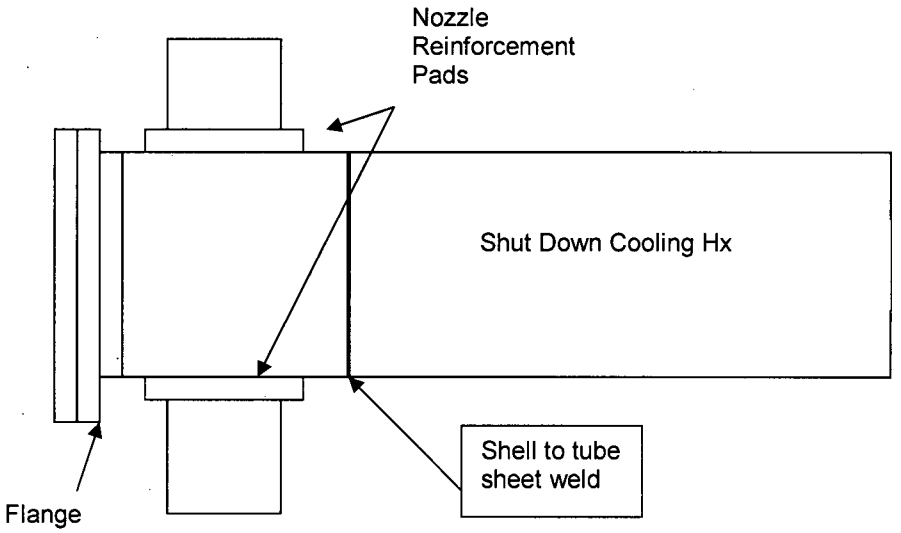

COMMENTS: Configuration of top and bottom nozzle saddle weld and the horizontal shell weld limit this exam. Scanning the circumferential Flange to shell weld on the SDC "B" Hx is limited by the Nozzle reinforcement pads welded to the shell of the hx at the 0° and 180°. The short neck flange itself creates additional scanning limitations for 360° around this weld.

Page 1 of 2

Entergy

EXAMINATION COVERAGE PROFILE

Attachment #: 54-075

☐ ANO 1	☐ ANO 2	☐ GGNS	☐ RBS	■ W3

Description: Shut Down Cooling Heat Exchanger "B" Tube sheet to Shell Weld

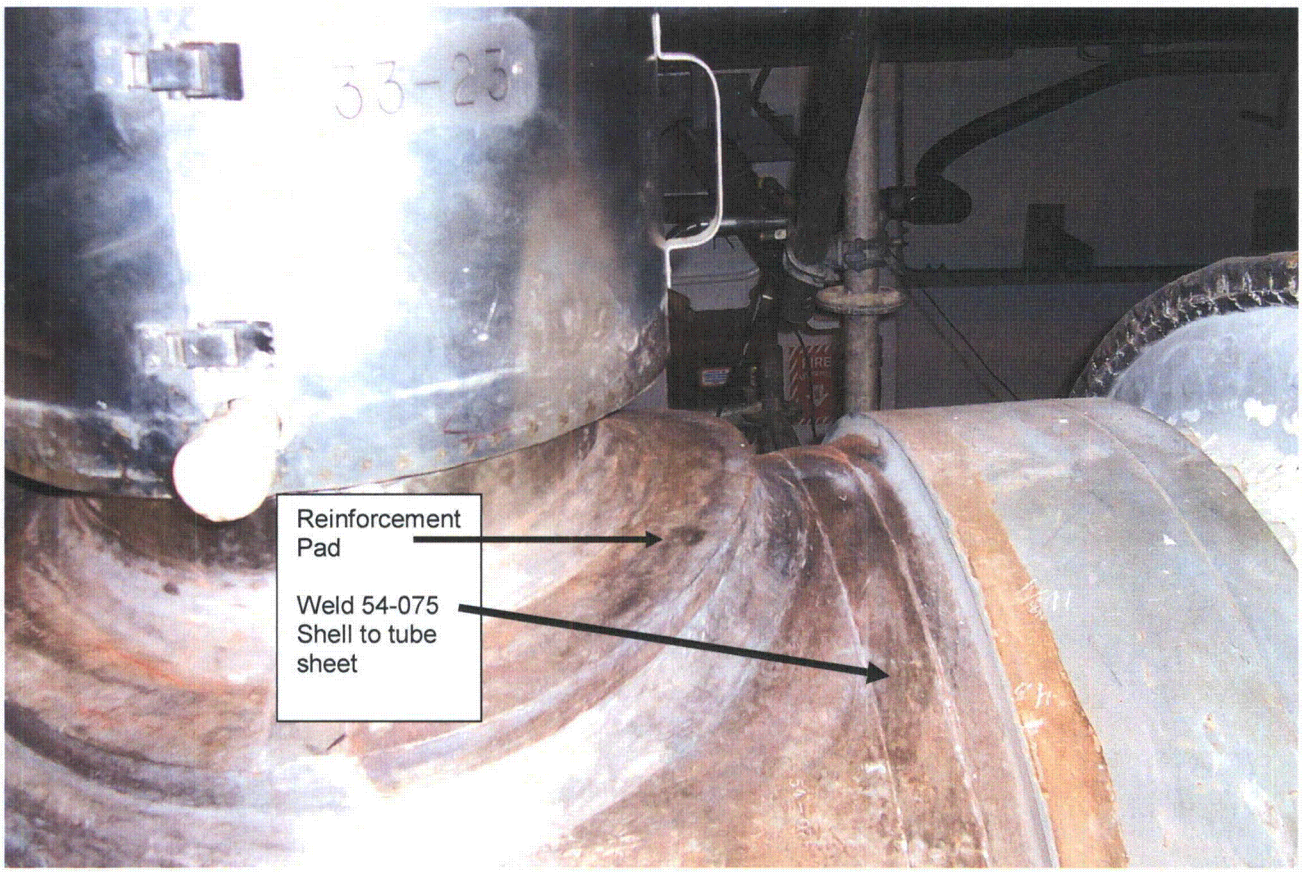

COMMENTS: The top and bottom nozzle reinforcement pads limit scanning the circumferential Tube sheet to shell weld. Nozzle reinforcement pads are located at the top and bottom (0° and 180°) of the heat exchanger.

Page 2 of 2

EXAMINATION COVERAGE PROFILE

Attachment #: 55-001	☐ ANO 1	☐ ANO 2	☐ GGNS	☐ RBS	■ W3

Component ID: 55-001 **Report No.:** ISI-UT-07-003 . **Material Type:** SS .

Configuration: Valve to o10" pipe **Pipe Diameter.:** 10" **Sch/ T:** .365"

Angle's Used: 45°S, 60°RL, 70°RL

NOTE: The plot shown is an electronic representation of the actual profile and not to scale.

TOTAL EXAM VOLUME OBTAINED: 50%

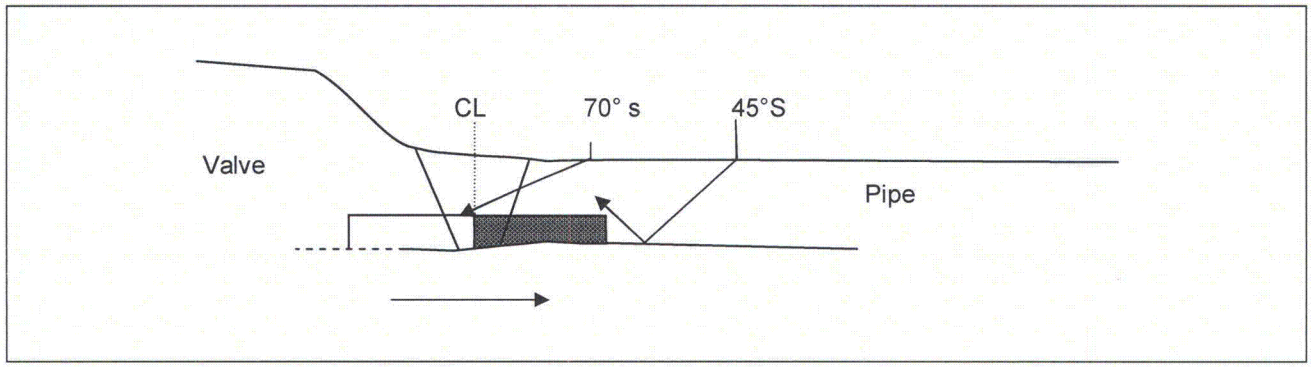

No Coverage Full coverage

COMMENTS: Scanning limited to pipe side only, due to valve OD configuration.

Entergy

EXAMINATION COVERAGE PROFILE

Attachment #: 55-051	☐ ANO 1	☐ ANO 2	☐ GGNS	☐ RBS	■ W3

Component ID: 55-051 **Report No.:** 99-244 . **Material Type:** SS

Configuration: 8" Pipe to Valve **Pipe Diameter.:** 8" **Sch/ T:** 0.719"

Angle's Used: 45°S, 60°L, 70° L

NOTE: **The plot shown is an electronic representation of the actual profile and not to scale.**

TOTAL EXAM VOLUME OBTAINED: 45.5%

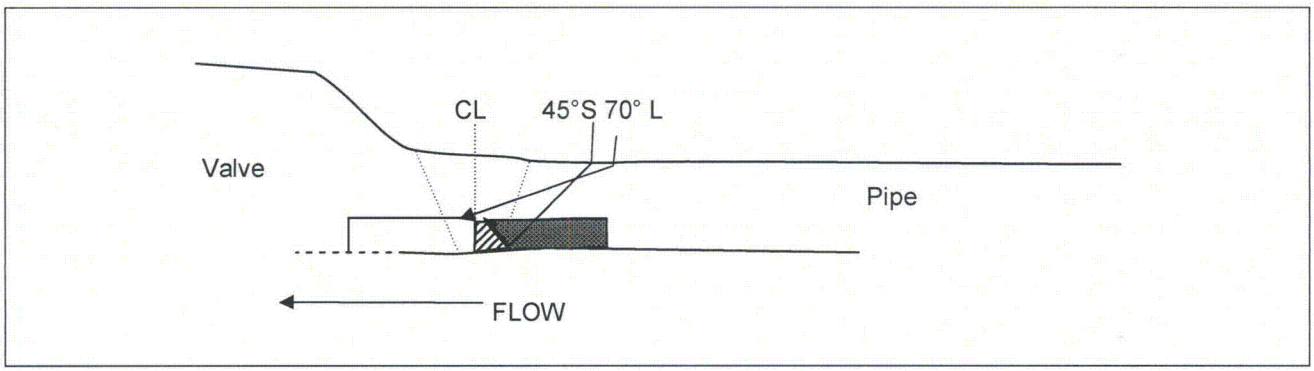

No Coverage Full Coverage 60°L & 70° L only

COMMENTS: Single sided exam due to valve configuration. Additional limitation on pipe side due to weld crown.

Entergy

EXAMINATION COVERAGE PROFILE

Attachment #: 56-001	☐ ANO 1	☐ ANO 2	☐ GGNS	☐ RBS	■ W3

Component ID: 56-001 **Report No.:** 2003-018 **Material Type:** SS

Configuration: Valve to 10" pipe **Pipe Diameter.:** 10" **Sch/ T:** .365"

Angle's Used: 45°S, 60°S, 70° S

NOTE: **The plot shown is a representation of the actual profile and not to scale.**

TOTAL EXAM VOLUME OBTAINED: 50%

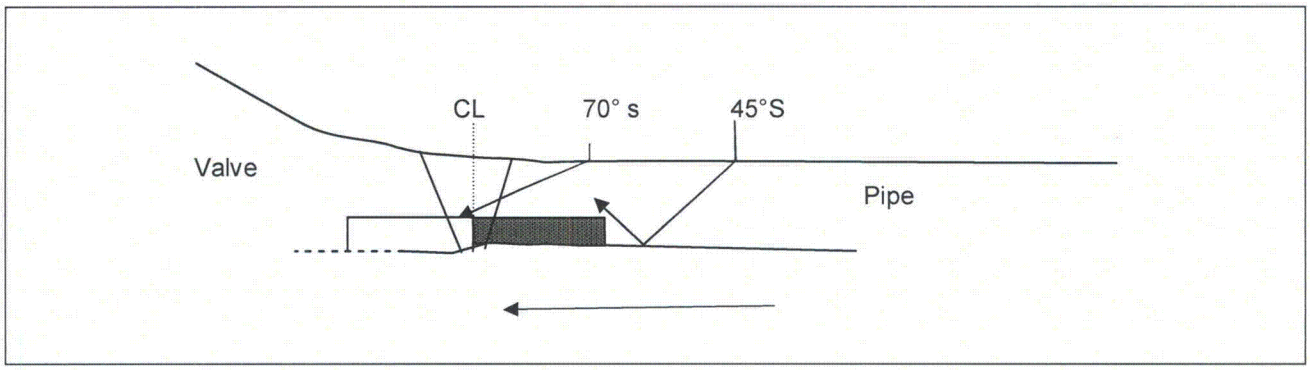

No Coverage Full Coverage

COMMENTS: Scanning limited to pipe side only, due to valve OD configuration.

Entergy

EXAMINATION COVERAGE PROFILE

Attachment #: 56-002	☐ ANO 1	☐ ANO 2	☐ GGNS	☐ RBS	■ W3

Component ID: 56-002, 56-003, 56-005 **Report No.:** 2003-018 . **Material Type:** SS

Configuration: 10" pipe to Tee **Pipe Diameter.:** 10" **Sch/ T:** .365"

Angle's Used: 45°S, 60°S, 70° S

NOTE: The plot shown is an electronic representation of the actual profile and not to scale.

TOTAL EXAM VOLUME OBTAINED: 50%

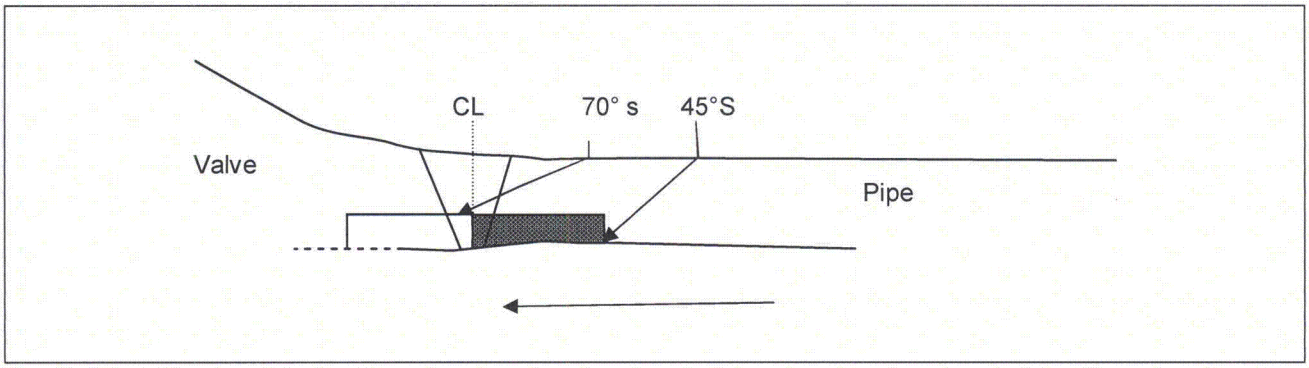

No Coverage Full Coverage

COMMENTS: Scanning limited to pipe side only due to tee OD configuration.

Entergy

EXAMINATION COVERAGE PROFILE

Attachment #: 56-077	☐ ANO 1	☐ ANO 2	☐ GGNS	☐ RBS	■ W3

Component ID: 56-077 **Report No.:** 2000-153 **Material Type:** SS .

Pipe Diameter.: 8" **Sch/ T:** 0.80" **Angle's Used:** 45° S, 60° RL

NOTE: **The plot shown is an electronic representation of the actual profile and not to scale.**

TOTAL EXAM VOLUME OBTAINED: 50%

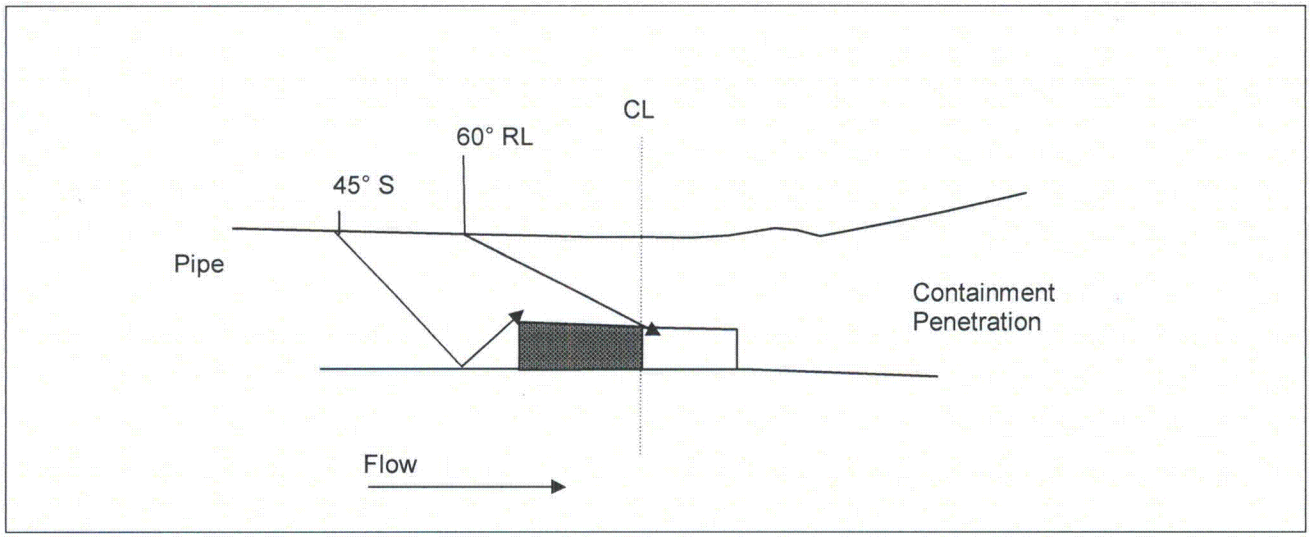

No Coverage Full Coverage

COMMENTS: Scanning limited to pipe side only, due to OD configuration of penetration side.

Entergy

EXAMINATION COVERAGE PROFILE

Attachment #: 60-131	☐ ANO 1	☐ ANO 2	☐ GGNS	☐ RBS	■ W3

Component ID: 60-131 **Report No.:** 2003-047 . **Material Type:** SS .

Pipe Diameter.: 4" **Sch/ T:** 0.438" **Angle's Used:** 45°S, 60°S, 70° S

NOTE: The plot shown is an electronic representation of the actual profile and not to scale.

TOTAL EXAM VOLUME OBTAINED: 79%

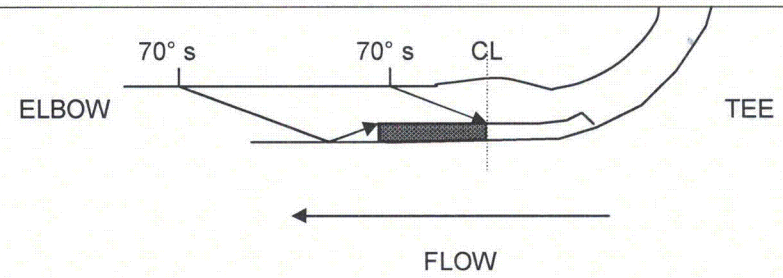

*Note = Only 57% coverage was achieved from the Tee side due to the OD contour. (50% X .57 = 29%)

No Coverage Full Coverage

COMMENTS: Scanning limited due to Tee to pipe configuration, 6" total inches was not scanned due to interference.

EXAMINATION COVERAGE PROFILE

Attachment #: 60-468	☐ ANO 1	☐ ANO 2	☐ GGNS	☐ RBS	■ W3

Component ID: 60-468 **Report No.:** 2000-252 **Material Type:** SS

Pipe Diameter.: 3" **Sch/ T:** 0.438" **Angle's Used:** 45°S, 60°S, 70° S

NOTE: **The plot shown is a representation of the actual profile and not to scale.**

TOTAL EXAM VOLUME OBTAINED: 75%

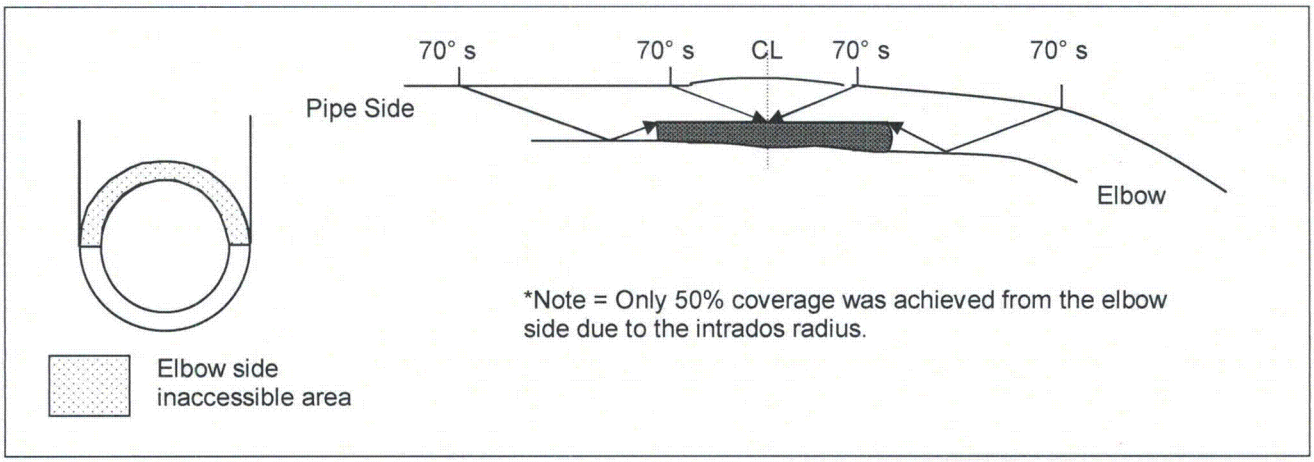

No Coverage

Full Coverage

COMMENTS: Scanning limited to 50% circumference on the elbow side due to the intrados radius.

Entergy

EXAMINATION COVERAGE PROFILE

Attachment #: 60-469

☐ ANO 1	☐ ANO 2	☐ GGNS	☐ RBS	■ W3

Component ID: 60-469 Report No.: 2000-252 Material Type: SS .

Pipe Diameter.: 3" Sch/ T: 0.44" Angle's Used: 45°S, 60°S 70° S

NOTE: The plot shown is an electronic representation of the actual profile and not to scale.

TOTAL EXAM VOLUME OBTAINED: 50%

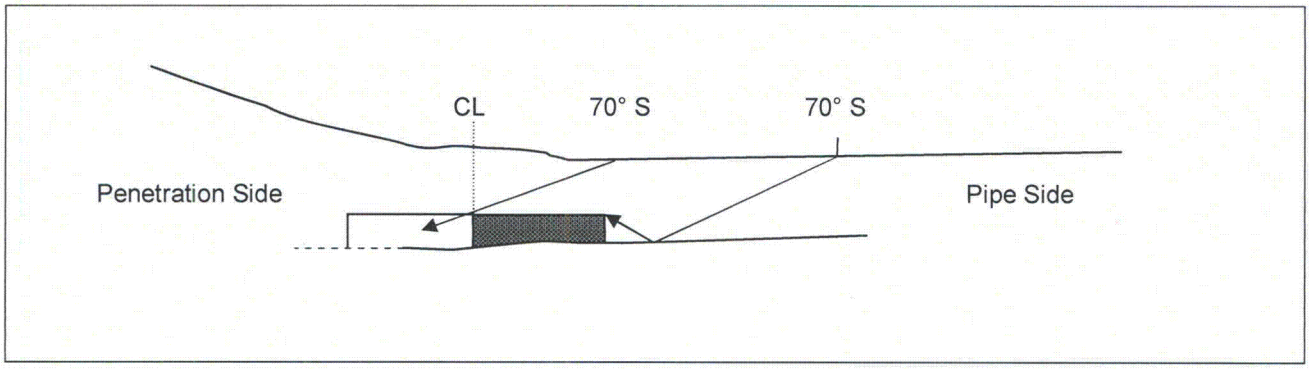

No Coverage Full Coverage

COMMENTS: Single sided exam due to penetration configuration.

Entergy

EXAMINATION COVERAGE PROFILE

Attachment #: 61-071	☐ ANO 1	☐ ANO 2	☐ GGNS	☐ RBS	■ W3

Component ID: 61-071 **Report No.:** ISI UT 06-003 **Material Type:** SS

Pipe Diameter.: 8" **Sch/ T:** 0.80" **Angle's Used:** 45°S, 70°S

NOTE: **The plot shown is an electronic representation of the actual profile and not to scale.**

TOTAL EXAM VOLUME OBTAINED: 50%

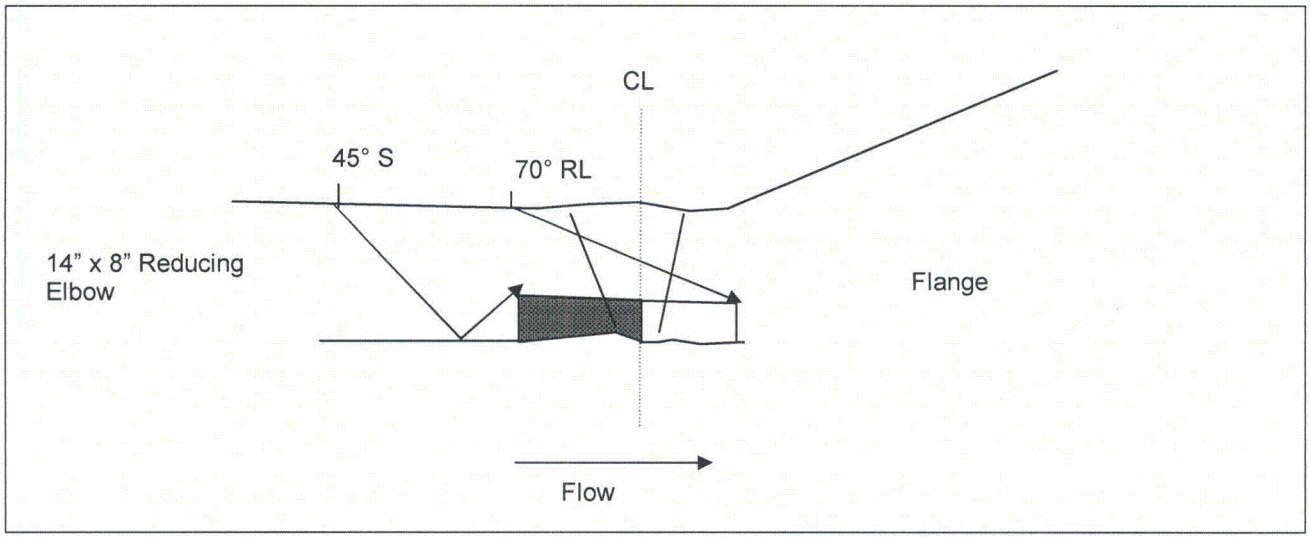

No Coverage Full Coverage

COMMENTS: Scanning limited to elbow side only, due to flange OD configuration.

Entergy

EXAMINATION COVERAGE PROFILE

Attachment #: 64-001	☐ ANO 1	☐ ANO 2	☐ GGNS	☐ RBS	■ W3

Component ID: 64-001 **Report No.:** 2000-063 **Material Type:** SS

Pipe Diameter.: 10" **Sch/ T:** 0.365" **Angle's Used:** 45°S, 60°S 70°S

NOTE: The plot shown is an electronic representation of the actual profile and not to scale.

TOTAL EXAM VOLUME OBTAINED: 50%

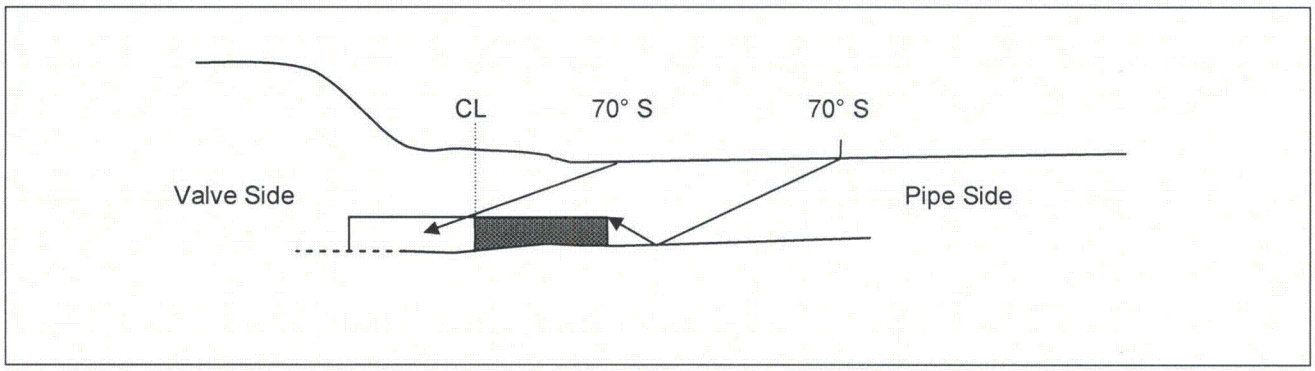

No Coverage Full Coverage

COMMENTS: Single sided exam due to valve configuration. Additional limitation on pipe side due to weld crown.