xLPR Documentation

PIB Meeting

Oct. 27, 2009

Legacy Hotel, Rockville, MD

Documentation

- Model flow diagramming
  - Provides framework for program and model discussions
  - General model flow
  - Individual model details
  - Uncertainties
- Share Point Site
  - Cross-communication on working ideas/documents
  - Sharing of Master Documents (databases, flow diagrams, etc)
- Reports
  - Keep track of program status
  - Version 2.0 program plan & open issues

PFM: Process Flow Diagram Approach

Technical Features

- Treats both parameter and relationship uncertainty
- Displays complex process in a logical format
- Provides big picture view while preserving details
- Readily transitions into a mathematical model

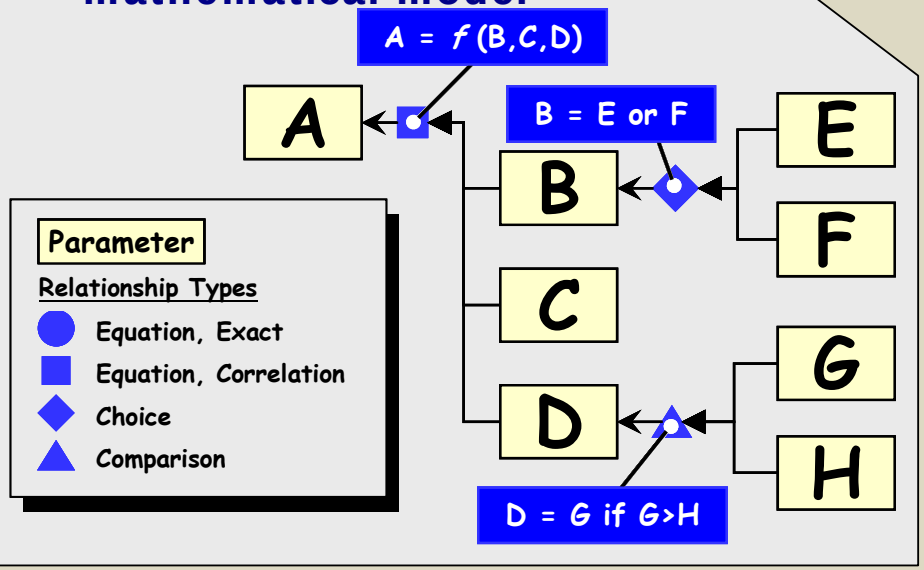

Social Features

- Visual hierarchy
  - Streamlines critique
  - Enables understanding by non-experts
- Builds consensus
  - Provides a common language for discussion
  - Allows participants to "see" their input
  - Judgments regarding "important" effects made by the model, NOT the participants

Benefits

- Promotes broad understanding of model
- Motivates future model refinements / improvements

Diagramming: An Iterative Process

Develop initial process diagram

↓

Decisions on model selection

↓

Modify diagram, detail models

↓

ID uncertainties

↓

Treat uncertainties

↓

Code process

↓

Parameter studies

↓

Finalize diagram & code

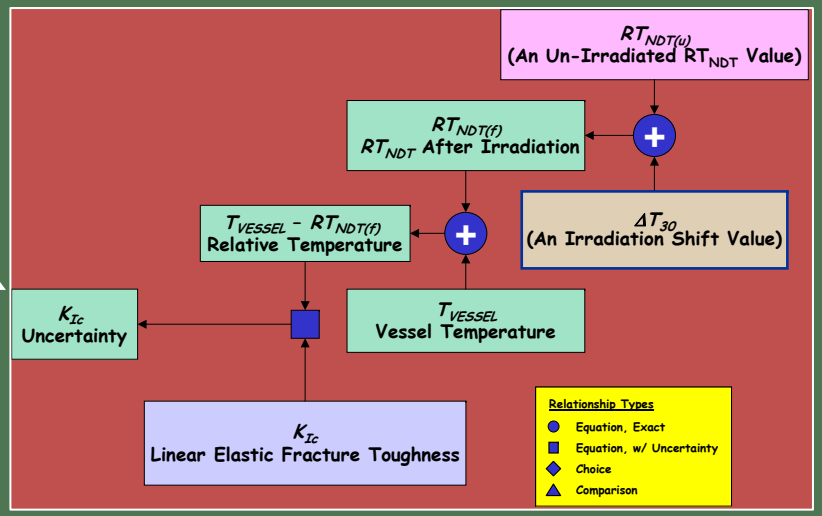

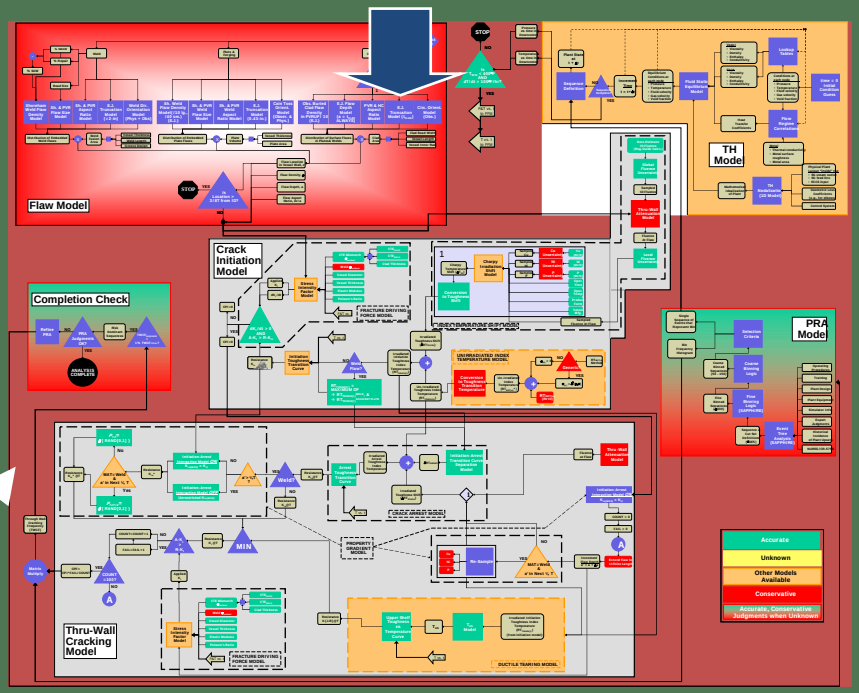

Program Plan Flow

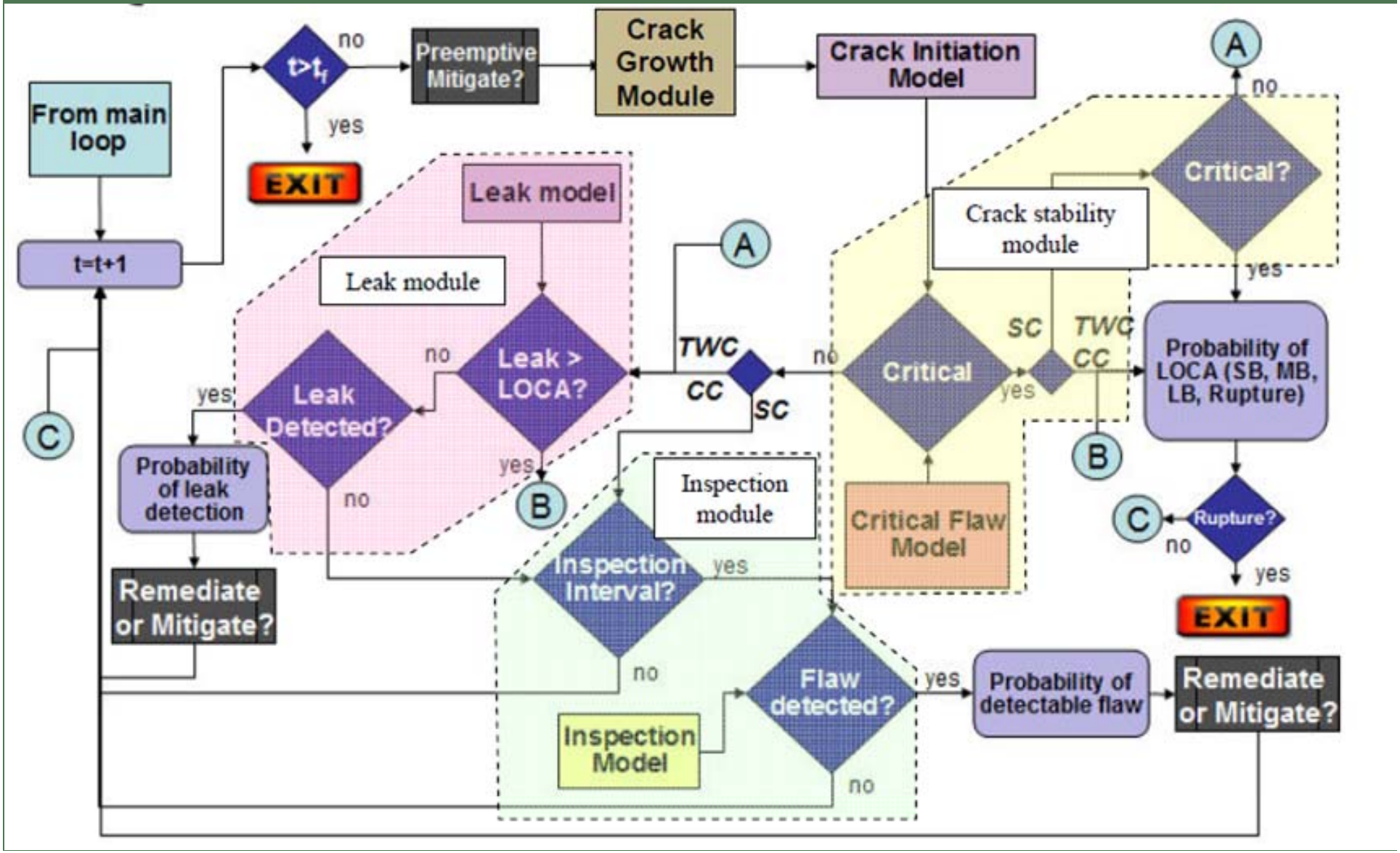

Time Loop Diagram

Paul Williams- ORNL

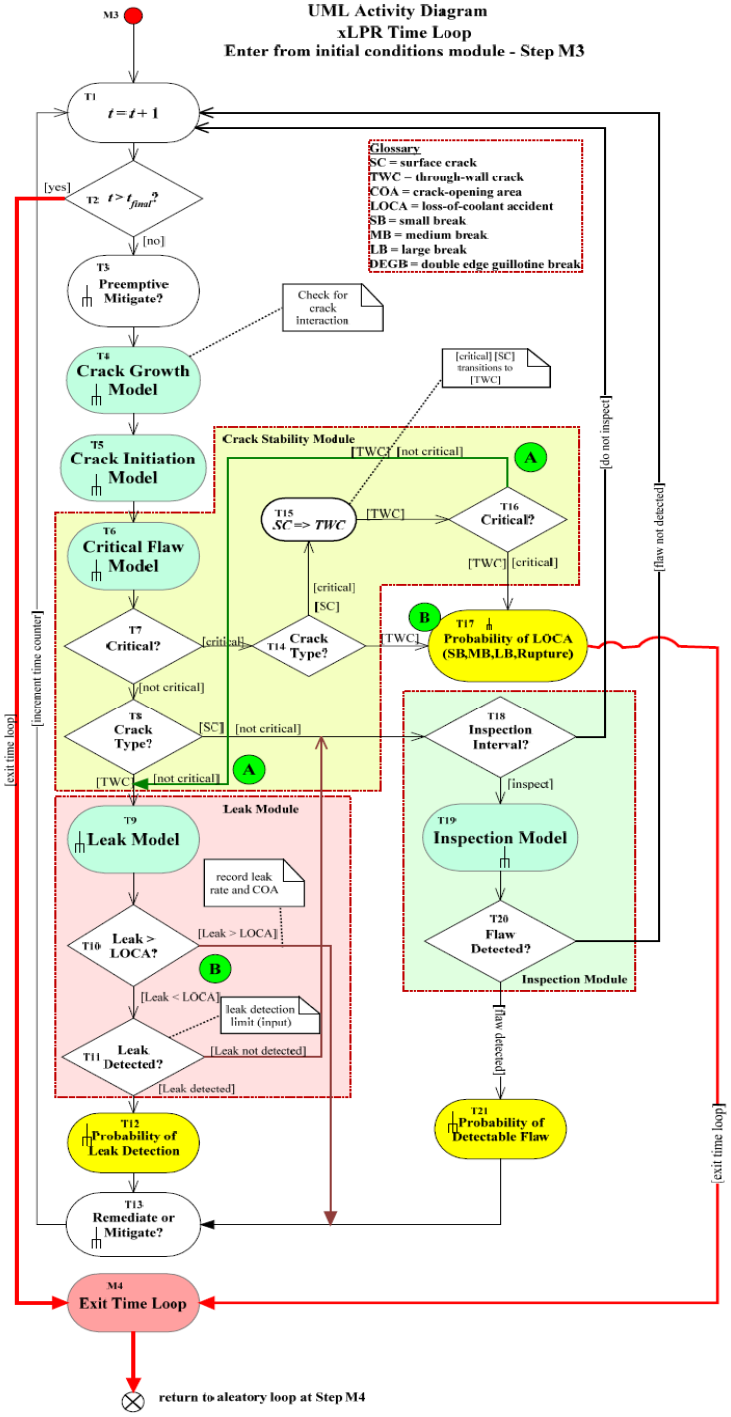

Diagramming Status

Updating of flow diagram, to incorporate detailed descriptions of individual models, will be done when pilot project models are confirmed and all inputs, model parameters, etc are known

Planned modification by end of 2009

Other Documentation

- Project Report (MRP/NUREG?)
  - Task Group Status Reports
    - Pilot Project status & challenges
    - Parking Lot items for full project consideration
    - Decision process (assumptions, metrics, etc)
  - Management (PIB-level) Status reports
    - Funding & Contracts
    - Review Board activities
    - Process review
      - Cross communication
      - Participation & levels of cooperation
- Program Plan for Version 2.0
  - Open items documentation
  - Assumptions from Version 1.0 to be addressed
- Users Manual