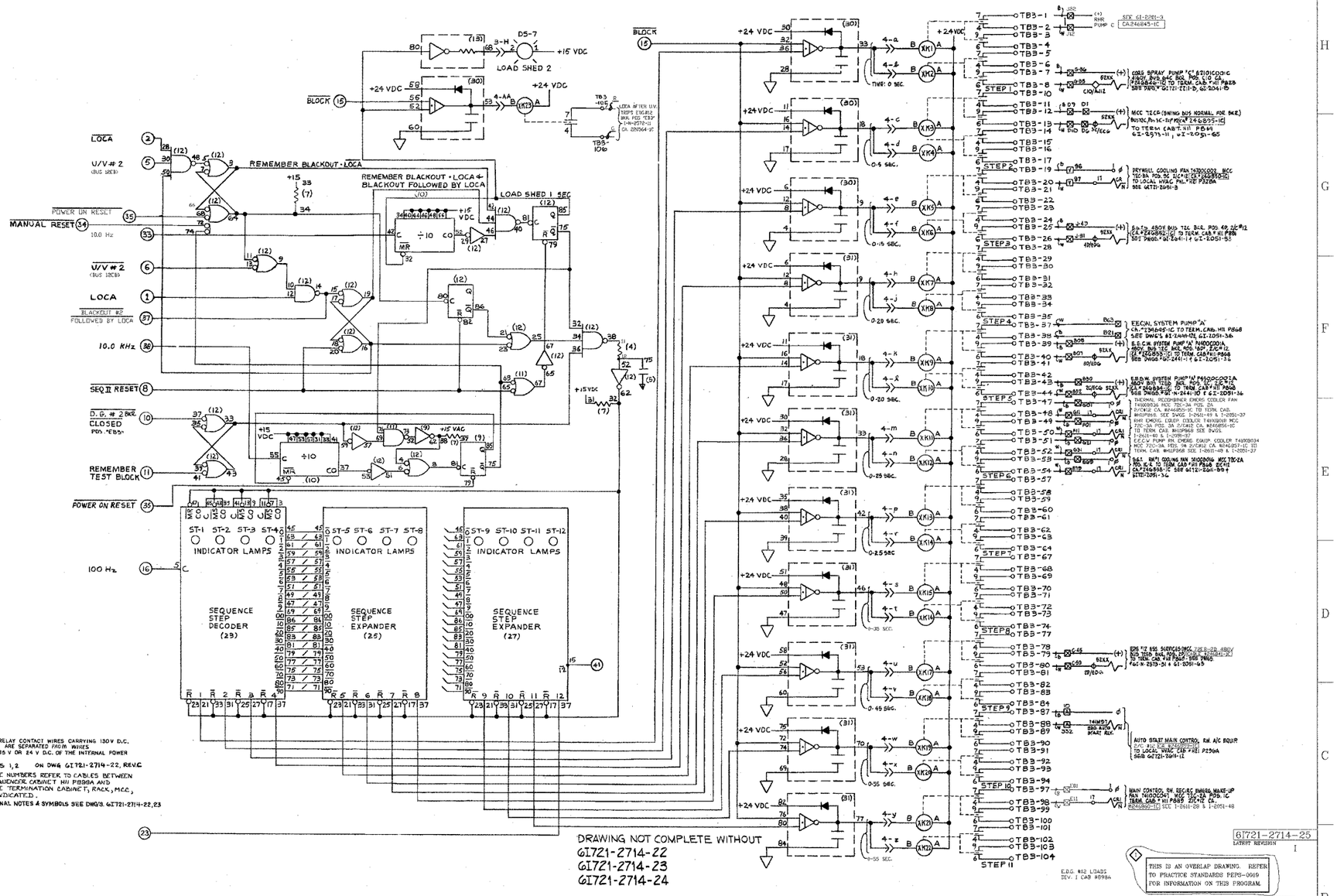
LOCA
U/V # 2
(BUS 12E3)
POWER ON RESET
MANUAL RESET
10.0 Hz
U/V # 2
(BUS 12E3)
LOCA
BLACKOUT #2
FOLLOWED BY LOCA
10.0 KHz
SEQ II RESET
D.G. # 2 BKR
CLOSED
POS. "EB5"
REMEMBER
TEST BLOCK
POWER ON RESET
100 Hz
REMEMBER BLACKOUT - LOCA
REMEMBER BLACKOUT - LOCA &
BLACKOUT FOLLOWED BY LOCA
LOAD SHED 1 SEC
LOAD SHED 2
+24 VDC
+15 VDC
+15 VAC
BLOCK
INDICATOR LAMPS
SEQUENCE STEP DECODER (23)
SEQUENCE STEP EXPANDER (25)
SEQUENCE STEP EXPANDER (27)
STEP 1
STEP 2
STEP 3
STEP 4
STEP 5
STEP 6
STEP 7
STEP 8
STEP 9
STEP 10
STEP 11
CORE SPRAY PUMP "C" 61-2010-C
MCC 72CF (SWING BUS NORMAL FOR BKR)
DRYWELL COOLING FAN
EECW SYSTEM PUMP "A"
E.S.W. SYSTEM PUMP "A"
E.S.W. SYSTEM PUMP "A"
THERMAL RECOMBINER EMERG COOLER FAN
RHR EMERG. COLLER COOLER
E.E.C.W. PUMP RM. EMERG. COOLER
S&T 8H" COOLING WL 3000GPM
EDG #2 SLEEVES
AUTO START MAIN CONTROL RM A/C EQUIP
MAIN CONTROL RM. SEC/AC RMOOS MAKE-UP
E.D.G. #2 LOADS
REV I CAB #3984
NOTES:
1. ALL OUTPUT RELAY CONTACT WIRES CARRYING 130V D.C. OR 125 V A.C. ARE SEPARATED FROM WIRES POWERED BY 15 V OR 24 V D.C. OF THE INTERNAL POWER SUPPLIES.
2. SEE NOTES 1,2 ON DWG 6I721-2714-22, REV.C
3. ALL CABLE NUMBERS REFER TO CABLES BETWEEN E.D.G. SEQUENCER CABINET M11 P8990A AND RESPECTIVE TERMINATION CABINET, RACK, MCC, ETC. AS INDICATED.
4. FOR ADDITIONAL NOTES & SYMBOLS SEE DWG'S. 6I721-2714-22,23
DRAWING NOT COMPLETE WITHOUT
6I721-2714-22
6I721-2714-23
6I721-2714-24
THIS IS AN OVERLAP DRAWING. REFER TO PRACTICE STANDARDS PEPS-0019 FOR INFORMATION ON THIS PROGRAM.
NUCLEAR SAFETY RELATED
THIS IS AN AUTOCAD PRODUCED DRAWING. CHANGES OR REVISIONS MUST BE BROUGHT TO THE ATTENTION OF THE PLANT ENGINEERING DESIGN GROUP TO ENSURE THAT CONFIGURATION CONTROL IS MAINTAINED.
THE INDIVIDUAL CONDUCTORS OF MULTICONDUCTOR CABLES COULD BE IDENTIFIED USING EITHER OF THE FOLLOWING TWO CODES (PER IPCEA S-19-81)
COLOR CODE B W R G O BL WB RB GB OR BLR BW
NUMERIC CODE 1 2 3 4 5 6 7 8 9 10 11 12
6I721-2714-25
LATEST REVISION I
DCD'S INCORPORATED
OTHER REVISIONS: ADDED OVERLAP DRAWING NOTE. CHANGED PTS #3 TO ECCO FORMAT.
PREPARED BY A.CBUSINO 9/12/97
CHECKED BY 12/24/97
APPROVED BY 12/24/97
A PORTION OF THIS DRAWING IS AFFECTED BY THE FOLLOWING:
TC CHANGE DOCUMENT
PREPARED BY DATE
CHECKED BY DATE
APPROVED BY DATE
DESIGN APPROVALS DATE
INC.CODE S
Detroit Edison Fermi 2
TITLE ELECTRICAL SCHEMATIC E.D.G. AUTOMATIC DIGITAL LOAD SEQUENCING SYSTEM
APERTURE CARD TITLE S D EDG AUTO LOAD SEQUENCE SYS.
PLANT MODIFICATION SYSTEM NUMBER 52001
DOCUMENT TYPE CODE DDDINC
DRAWING NUMBER 6I721-2714-25
REV. I