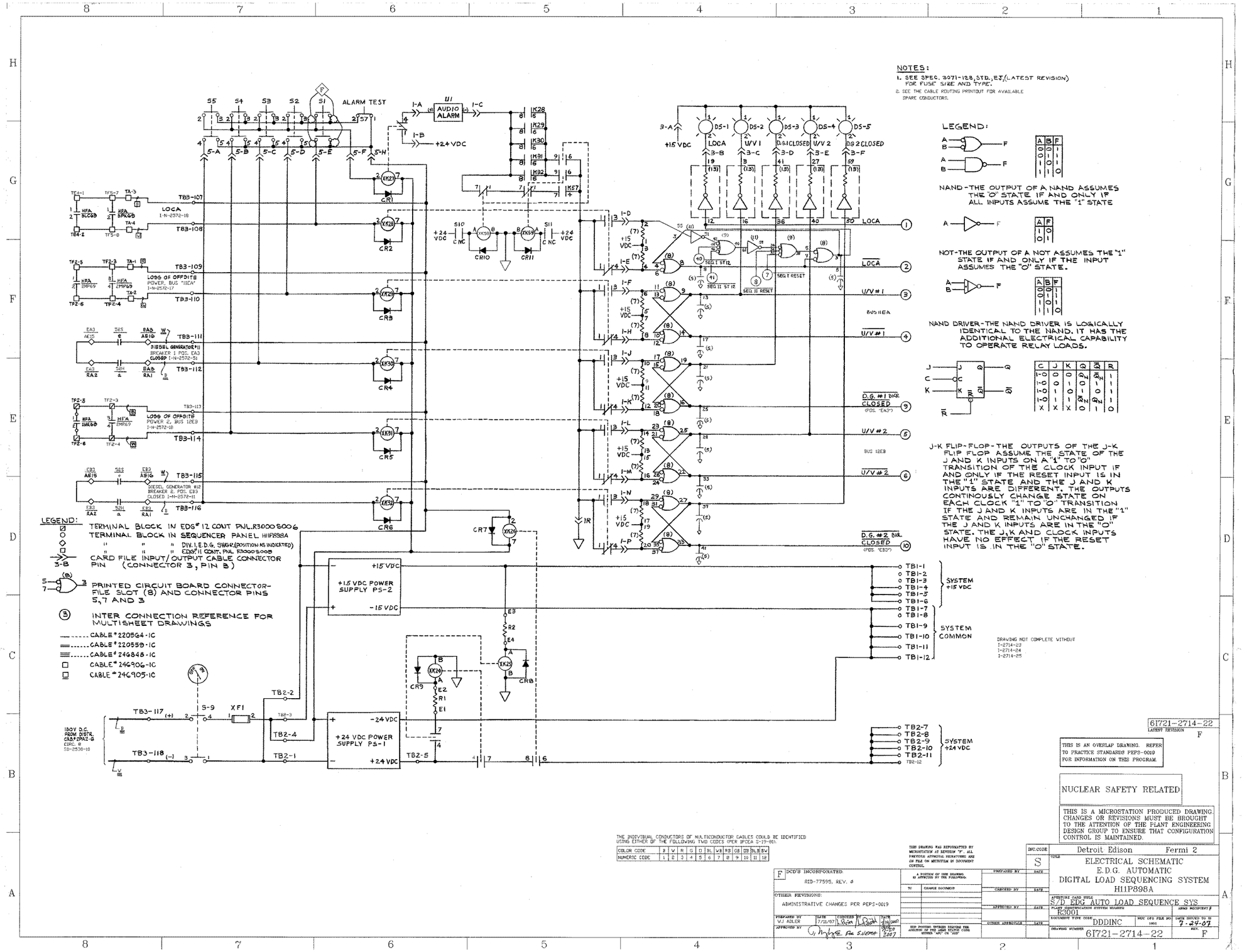
ALARM TEST
U1 AUDIO ALARM
+24 VDC
+15 VDC
LOCA
U/V 1
D.G.1 CLOSED
U/V 2
D.G.2 CLOSED
TB3-107
TB3-108
TB3-109
TB3-110
TB3-111
TB3-112
TB3-113
TB3-114
TB3-115
TB3-116
LOSS OF OFFSITE POWER, BUS "11EA"
DIESEL GENERATOR #1 BREAKER 1 POS. EA3 CLOSED
LOSS OF OFFSITE POWER 2, BUS 12EB
DIESEL GENERATOR #2 BREAKER 2 POS. EB3 CLOSED
+15 VDC POWER SUPPLY PS-2
-24 VDC POWER SUPPLY PS-1
TB2-1
TB2-2
TB2-3
TB2-4
TB2-5
TB3-117
TB3-118
XF1
SEQ I ST12
SEQ II ST12
SEQ I RESET
SEQ II RESET
BUS 11EA
BUS 12EB
D.G. #1 BKR. CLOSED (POS. "EA3")
D.G. #2 BKR. CLOSED (POS. "EB3")
TB1-1
TB1-2
TB1-3
TB1-4
TB1-5
TB1-6
TB1-7
TB1-8
TB1-9
TB1-10
TB1-11
TB1-12
SYSTEM +15 VDC
SYSTEM COMMON
TB2-7
TB2-8
TB2-9
TB2-10
TB2-11
TB2-12
SYSTEM +24 VDC
LEGEND:
TERMINAL BLOCK IN EDG# 12 CONT PNL.R3000S006
TERMINAL BLOCK IN SEQUENCER PANEL H11P898A
" " " DIV. 1, E.D.G. SWGR.(POSITION AS INDICATED)
" " " EDG# 11 CONT. PNL. R3000S005
CARD FILE INPUT/OUTPUT CABLE CONNECTOR PIN (CONNECTOR 3, PIN B)
PRINTED CIRCUIT BOARD CONNECTOR-FILE SLOT (8) AND CONNECTOR PINS 5,7 AND 3
INTER CONNECTION REFERENCE FOR MULTISHEET DRAWINGS
CABLE #220564-1C
CABLE #220559-1C
CABLE #246848-1C
CABLE #246906-1C
CABLE #246905-1C
NOTES:
1. SEE SPEC. 3071-128, STD., EJ, (LATEST REVISION) FOR FUSE SIZE AND TYPE.
2. SEE THE CABLE ROUTING PRINTOUT FOR AVAILABLE SPARE CONDUCTORS.
LEGEND:
NAND-THE OUTPUT OF A NAND ASSUMES THE "0" STATE IF AND ONLY IF ALL INPUTS ASSUME THE "1" STATE
NOT-THE OUTPUT OF A NOT ASSUMES THE "1" STATE IF AND ONLY IF THE INPUT ASSUMES THE "0" STATE.
NAND DRIVER-THE NAND DRIVER IS LOGICALLY IDENTICAL TO THE NAND. IT HAS THE ADDITIONAL ELECTRICAL CAPABILITY TO OPERATE RELAY LOADS.
J-K FLIP-FLOP-THE OUTPUTS OF THE J-K FLIP FLOP ASSUME THE STATE OF THE J AND K INPUTS ON A "1" TO "0" TRANSITION OF THE CLOCK INPUT IF AND ONLY IF THE RESET INPUT IS IN THE "1" STATE AND THE J AND K INPUTS ARE DIFFERENT. THE OUTPUTS CONTINOUSLY CHANGE STATE ON EACH CLOCK "1" TO "0" TRANSITION IF THE J AND K INPUTS ARE IN THE "1" STATE AND REMAIN UNCHANGED IF THE J AND K INPUTS ARE IN THE "0" STATE. THE J,K AND CLOCK INPUTS HAVE NO EFFECT IF THE RESET INPUT IS IN THE "0" STATE.
DRAWING NOT COMPLETE WITHOUT 1-2714-23 1-2714-24 1-2714-25
THIS IS AN OVERLAP DRAWING. REFER TO PRACTICE STANDARDS PEPS-0019 FOR INFORMATION ON THIS PROGRAM.
NUCLEAR SAFETY RELATED
THIS IS A MICROSTATION PRODUCED DRAWING. CHANGES OR REVISIONS MUST BE BROUGHT TO THE ATTENTION OF THE PLANT ENGINEERING DESIGN GROUP TO ENSURE THAT CONFIGURATION CONTROL IS MAINTAINED.
THE INDIVIDUAL CONDUCTORS OF MULTICONDUCTOR CABLES COULD BE IDENTIFIED USING EITHER OF THE FOLLOWING TWO CODES (PER IPCEA S-19-81).
COLOR CODE B W R G D BL VB RB GB DB SLB BW
NUMERIC CODE 1 2 3 4 5 6 7 8 9 10 11 12
DCD'S INCORPORATED
RID-77595, REV. 0
OTHER REVISIONS:
ADMINISTRATIVE CHANGES PER PEPS-0019
PREPARED BY WJ ADLER 7/11/97
APPROVED BY
THIS DRAWING WAS REFORMATTED BY MICROSTATION AT REVISION "F". ALL PREVIOUS APPROVAL SIGNATURES ARE ON FILE ON MICROFILM IN DOCUMENT CONTROL.
POSITION OF THIS DRAWING IS APPROVED BY THE FOLLOWING.
TO CHANGE DOCUMENT
PREPARED BY
CHECKED BY
APPROVED BY
OTHER APPROVALS
DATE
INC. CODE S
Detroit Edison Fermi 2
TITLE
ELECTRICAL SCHEMATIC
E.D.G. AUTOMATIC
DIGITAL LOAD SEQUENCING SYSTEM
H11P898A
APERTURE CARD TITLE
S/D EDG AUTO LOAD SEQUENCE SYS
PLANT CONSTRUCTION SYSTEM NUMBER R3001
DOCUMENT TYPE CODE DDDINC
NOC CFD FILE NO 1001
DATE ISSUED DD MM YY 7-29-97
DRAWING NUMBER 61721-2714-22
REV. F
61721-2714-22
LATEST REVISION F