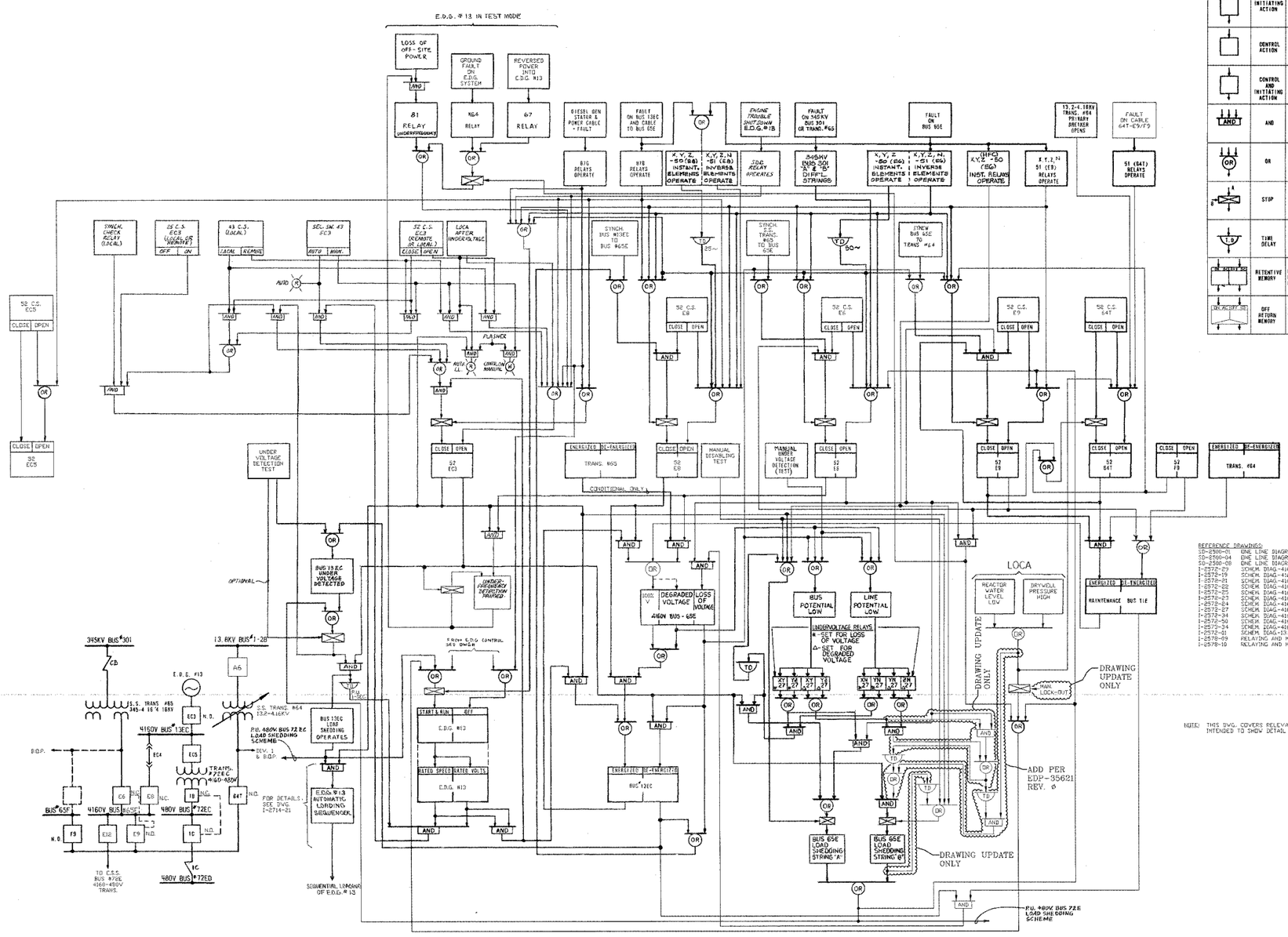

SYMBOL	NAME	MEANING
	INITIATING ACTION	PRODUCES AN OUTPUT FOR CONDITION SPECIFIED IN BOX
	CONTROL ACTION	INPUT PRODUCES CONTROL ACTION SPECIFIED IN BOX
	CONTROL AND INITIATING ACTION	SAME AS ABOVE, BUT ALSO INITIATES ANOTHER ACTION
AND	AND	PRODUCES AN OUTPUT ONLY WHEN EVERY INPUT IS SATISFIED
OR	OR	PRODUCES AN OUTPUT WHEN ANY INPUT IS SATISFIED
A B	STOP	INPUT "A" PRODUCES AN OUTPUT EXCEPT WHEN "B" IS PRESENT. (INPUT "B" STOPS "A" FROM PRODUCING AN OUTPUT)
T.D.	TIME DELAY	PRODUCES AN OUTPUT AFTER TIME DELAY WHEN INPUT IS SATISFIED. TERMINATES OUTPUT IMMEDIATELY WHEN INPUT IS REMOVED.
ON ON OFF ON	RETENTIVE MEMORY	RETAINS THE CONDITION OF OUTPUT CORRESPONDING TO LAST INPUT (SUCH AS A LATCHED CIRCUIT BREAKER). POWER REQUIRED FOR OPERATION (MAY BE INDICATED AS TDC)
ON ON OFF ON	OFF RETURN MEMORY	SAME AS RETENTIVE MEMORY BUT RETURNS TO OFF ON POWER INTERRUPTION. NO POWER NEEDED FOR OFF CONDITIONS.

REFERENCE DRAWINGS:

SD-2500-01	ONE LINE DIAGRAM-PLANT 4160V & 480V SYSTEM SERVICE
SD-2500-04	ONE LINE DIAGRAM-4160V SYST. SERV. BUSSES #65E, 65F & 65G
SD-2500-08	ONE LINE DIAGRAM-4160V DIESEL GEN. BUSSES #13EA, 13EB, 13EC & 14ED
1-2572-29	SCHEM. DIAG-4160V E.S.S. BUSSES #65E & 65F-LOAD SHEDDING STRINGS
1-2572-19	SCHEM. DIAG-4160V E.S.S. DIESEL BUS #13EC LOAD SHEDDING STRINGS
1-2572-21	SCHEM. DIAG-4160V E.S.S. DIESEL BUS #13EC - POS. "EC-3"
1-2572-22	SCHEM. DIAG-4160V E.S.S. DIESEL BUS #13EC - POS. "EC-5"
1-2572-25	SCHEM. DIAG-4160V E.S.S. BUS #65E - POS. "C5"
1-2572-23	SCHEM. DIAG-4160V E.S.S. BUS #65E - POS. "C8"
1-2572-24	SCHEM. DIAG-4160V E.S.S. BUS #65E - POS. "E9"
1-2572-27	SCHEM. DIAG-4160V E.S.S. BUS #65E - POS. "C10"
1-2572-34	SCHEM. DIAG-4160V E.S.S. BUS #65F - POS. "F9"
1-2572-50	SCHEM. DIAG-4160V MAINTENANCE TIE FEEDER - POS. "64T"
1-2572-34	SCHEM. DIAG-4160V E.S.S. BUS #72EC - POS. "1B & 1C"
1-2572-01	SCHEM. DIAG-13.8 KV TRANS. PRIM. BKR, E.S. TRANS. #64
1-2578-09	RELAYING AND METERING DIAG. - 4160V E.S.S. BUS #65E
1-2578-10	RELAYING AND METERING DIAG. - E.D.G. #13

NOTE: THIS DWG. COVERS RELEVANT FUNCTIONS ONLY & IS NOT INTENDED TO SHOW DETAIL HARDWARE OPERATIONS & REQUIREMENTS

NUCLEAR SAFETY RELATED

DTC: ICEDP	EDP-35621-001 REV. Ø
DATE ISSUED 3-2-93	RECIPIENT PG. 1 OF 1
TITLE OF DOCUMENT: FUNCTIONAL LOGIC DIAGRAM	
OPERATION OF POWER LINE FEED	
& TIE BREAKERS	
4160V BUSSES 65E & 13EC	
DOCUMENT TO BE REVISED:	
1-2570-03	
THE FOLLOWING IS ONLY USED FOR NEW DRAWINGS	
NSR ____ NON-NSR ____ INC. CODE ____	
PIS # ____	
PREPARED BY: B. Thompson B. Thompson 3/3/93	
CHECKED BY: A. Brooks A. Brooks 3-3-93	