ENCLOSURE 2 TO NL-09-128

FEX-00204-00

"STATION BATTERY 22 SYSTEM CALCULATION"

ENTERGY NUCLEAR OPERATIONS, INC
INDIAN POINT NUCLEAR GENERATING UNIT NO. 2
DOCKET No. 50-247

Entergy

ENTERGY NUCLEAR MANAGEMENT MANUAL
EN-DC-149

VENDOR DOCUMENT REVIEW STATUS

☒ FOR ACCEPTANCE ☐ FOR INFORMATION

☒ IPEC ☐ JAF ☐ PLP ☐ PNPS ☐ VY ☐ ANO ☐ GGNS ☐ RBS ☐ W3

Document No.: FEX-00204	Rev. No. 0
Document Title: Station Battery 22 System Calculation	
EC No.:	Purchase Order No. 4500524568

STATUS NO:
1. ☐ ACCEPTED, WORK MAY PROCEED
2. ☐ ACCEPTED AS NOTED RESUBMITTAL NOT REQUIRED, WORK MAY PROCEED
3. ☒ ACCEPTED AS NOTED RESUBMITTAL REQUIRED
4. ☐ NOT ACCEPTED

Acceptance does not constitute approval of design details, calculations, analyses, test methods, or materials developed or selected by the supplier and does not relieve the supplier from full compliance with contractual negotiations.

	Print Name	Signature	Date
Responsible Engineer	H A Robinson		3/28/08
Engineering Supervisor	J Raffaele		3-28-8

☐ ANO-1 ☐ ANO-2 ☐ GGNS ☒ IP-2 ☐ IP-3 ☐ PLP
☐ JAF ☐ PNPS ☐ RBS ☐ VY ☐ W3

CALCULATION COVER PAGE | (1) EC # _____ | (2) Page 1 of 1350

(3) Design Basis Calc. ☒ YES ☐ NO | (4) ☒ CALCULATION ☐ EC Markup

(5) **Calculation No: FEX-00204** | (6) **Revision: 0**

(7) **Title: STATION BATTERY 22 SYSTEM CALCULATION**

(8) **System(s): DC** | (9) **Review Org (Department): EDEE**

(10) **Safety Class:**
☒ **Safety / Quality Related**
☐ **Augmented Quality Program**
☐ **Non-Safety Related**

(11) **Component/Equipment/Structure Type/Number:**
BATT22

(12) **Document Type: CALC**

(13) **Keywords (Description/Topical Codes):**
battery

REVIEWS

(14) Name/Signature/Date	(15) Name/Signature/Date	(16) Name/Signature/Date
FRAMATOME / AREVA	H A Robinson 3/21/08	J Raffaele 3-28-8
Responsible Engineer	☐ **Design Verifier** ☒ **Reviewer** ☒ Comments Attached	**Supervisor/Approval** ☐ Comments Attached

ATTACHMENT 9.2 **CALCULATION COVER PAGE**

Sheet 1 of 1

CALCULATION COVER PAGE

☒ IP-2 ☐ IP-3 ☐ JAF ☐ PNPS ☐ VY

Calculation No. FEX-00204-01	This revision incorporates the following MERLIN DRNs or Minor Calc Changes: N/A	Sheet 1 of 34

Title: STATION BATTERY 22 SYSTEM CALCULATION ☒QR ☐AQR ☐NQR

Discipline: ELECTRICAL ENGINEERING Design Basis Calculation? ☒Yes ☐No

This calculation supersedes/voids calculation: See List in Affected Documents Section on Page 3

Modification No./Task No/ER No: CLC-2-3

☐ No software used (Also check this box if spreadsheet application such as MathCAD or Excel is used.)
☐ Software used and filed separately (Include Computer Run Summary Sheet).
If "YES', Code:
☒ Software used and filed with this calculation. If "YES', Code: dcsdm

System No./Name: DC

Component No./Name: Batt22 / 58 Cell Battery 22
(Attach additional pages if necessary)

REV #/DRN # (*)	PREPARER	REVIEWER/ DESIGN VERIFIER	OTHER REVIEWER/ DESIGN VERIFIER	APPROVER	DATE
	Print/Sign				
0	See Original calculation Sheet for Signatures				
1	Hever Y Rendon Acevedo	Lawrence E. Easter			

* Refer to the Site EDMS for current status of the REV#/DRN# listed.

ATTACHMENT 9.2 CALCULATION COVER PAGE
Sheet 1 of 1

CALCULATION COVER PAGE

☒ IP-2 ☐ IP-3 ☐ JAF ☐ PNPS ☐ VY			
Calculation No. FEX-00204-00	This revision incorporates the following MERLIN DRNs or Minor Calc Changes: N/A	Sheet 1 of 35	
Title: STATION BATTERY 22 SYSTEM CALCULATION		☒ QR ☐ NQR	
Discipline: ELECTRICAL ENGINEERING	Design Basis Calculation? ☒ Yes ☐ No		
This calculation supersedes/voids calculation: See List in Affected Documents Section on Page 2			
Modification No./Task No/ER No: CLC-2-3			
☐ No software used ☐ Software used and filed separately (Include Computer Run Summary Sheet). If 'YES', Code: A ☒ Software used and filed with this calculation. If 'YES', Code: DCSDM			
System No./Name: DC Component No./Name: Batt22 / 58 Cell Battery 22 (Attach additional pages if necessary)			

REV #	STATUS (Prel, Pend, A, V, S)	PREPARER	REVIEWER/ DESIGN VERIFIER	OTHER REVIEWER/ DESIGN VERIFIER	APPROVER	DATE
		Print/Sign				
0	A	R. Fletcher R Fletcher 08-26-05	H. Rendon Acevedo 8/26/2005			

Sheet 1 of 1

RECORD OF REVISIONS

Calculation Number: FEX-00204-01 **Page** 2 **of** 34

Revision No.	Description of Change	Reason For Change
0	New Calculation	New Calculation
1	Removal of Over-voltage Analysis	IP2 initiated a reduction of project scope. Contract 4500524568 May 14th 2003

ATTACHMENT 9.4 CALCULATION SUMMARY PAGE

Sheet 1 of 1

CALCULATION SUMMARY PAGE Page 3 of 34

Calculation No. FEX-00204-01 Revision No. 1

CALCULATION OBJECTIVE: The purpose of this calculation is to develop a composite scenario and load profile for Indian Point Unit 2 Battery 22. This calculation analyzes the system in its normal configuration with all loads supplied from their normal source. Using the composite scenario and load profile, the calculation evaluates the following attributes of the battery system:1. Battery Sizing, 2. Device Voltage, 3. Short Circuit, 4. Charger Sizing

CONCLUSIONS: Conclusions are listed in detail in Section 7.0

ASSUMPTIONS: Assumptions are listed in detail in Section 3.

DESIGN INPUT DOCUMENTS: References and design input documents are listed in section 5.

59-01

AFFECTED DOCUMENTS: Calculation supersedes the following: FEX-00045-02, FEX-00050-02, FEX-00054-02, EGP-S18-002-1, FEX-00060-00, Panel 22 sections of FEX-00048-02, Battery 22 sections of FEX-00071-00, Battery 22 sections of FEX-00062-01, Portions of SGX-00007-03 that determine fault currents.

The following procedures are affected: PT-Q 1C - Minimum battery room temperature is raised from 59 degrees F to 60 degrees F. PT-R76C - Load profile may require an update.

B

B

METHODOLOGY: The methodology utilized is described in detail in section 2.

HR

Page 4 of 34

CALCULATION IMPACT REVIEW PAGE

Date:_____ ☐ QR ☐ NQR

(Note: **X** indicates required distribution)

To:
___ Mechanical Engineering
___ I&C Engineering
___ Electrical Engineering
___ Civil Engineering
_X_ System Engineering
___ Reactor Engineering
___ DBD Owner _____
___ DBD Owner _____
(Name)

___ Licensing
___ Elect Maintenance
___ I&C Maintenance
___ Mech Maintenance
___ Component Engineering
___ Program Engineering
___ Nuclear Engineering
___ EQ

___ Operations
___ Chemistry
___ HP/Radiological
___ Computer Applications
___ Rad Engineering
___ ISI Engineering
___ IST Engineering
___ PSA
_____
(Other)

From : _____
(Originator Print Name and Phone extension)

Calculation No.: FEX-00204-01 Revision No. 1

Title: STATION BATTERY 22 SYSTEM CALCULATION

Reference: _____

Date Response Required: _____

MESSAGE: Work organizations are requested to review the subject calculation (parts attached) to identify impacted calculations, procedures, Technical Specifications, FSAR sections, other design documents (e.g., EQ files, DBD, Appendix R, ISI/IST, PSA, MOVs/AOVs, etc.) and other documents, which must be updated because of the calculation results. Also provide the name of the individual responsible for the action and the tracking number (for example, via WT features in PCRS). The tracking item should include a requirement to ensure that any ER implementation associated with the item is completed prior to revising the impacted document. Sign and return the form to the originator.

IMPACT REVIEW RESULTS:

Affected Documents	Responsible Individual	Tracking Number	Remarks

Responding Supervisor/Manager (or designee): _____
Name/Signature Date

TABLE OF CONTENTS

		Page
1.0	Purpose/Objective	7
2.0	Method of Analysis	7
3.0	Assumptions	16
4.0	Input and Design Criteria	22
5.0	References	23
6.0	Analysis	25
7.0	Conclusions	34

FIGURES		Page
Figure A	Sample Schematic	9
Figure B	Sample V_{DEVICE} Calculation	10
Figure C	Sample Path, Segment, Alternate Device	11

ATTACHMENTS

		Pages
A.	Node Names & Descriptions	3
B.	Path Voltage Drop Summary	176
C.	Devices Requiring Further Analysis (N/A)	---
D.	Not Used	---
E.	Not Used	---
F.	Node Voltages	7
G.	Node Currents	7

H.	Battery Sizing Results	2
I.	Short Circuit Results	2
J.	Load Tabulation	565
K.	Cell Sizing Worksheet	2
L.	Voltage Profile	4
M.	Load Profile Graph	2
N.	One Line Diagram	2
O.	Scenario Matrices	10
P.	Component Assumptions	7
Q.	Not Used	N/A
R.	Reference Report by Battery	29
S.	Component Data Sheets	219
T.	July 1, 2004 Letter from Tom Horner (IP2) to Robert Fletcher (FANP), Nuclear Design Information Transmittal	36
U.	Voltage Margin Analysis	5
V.	Inverter Loading from Operator Logs	2
W.	Battery Information	5
X.	September 18, 2003 Letter from Richard Milici (IP2) to Jim Hausser (FANP)	2
Y	DIR(Design Input Review) FEX-00204-00	6
Z	Miscellaneous Vendor Documentation	12

1. Purpose/Objective

The purpose of this calculation is to develop a composite scenario and load profile for Indian Point Unit 2 Battery 22. This calculation analyzes the system in its normal configuration with all loads supplied from their normal source. Using the limiting cases represented by the composite scenario and load profile, the calculation evaluates the following attributes of the battery system:

1.1 Battery Sizing

Determine the minimum required battery size, in accordance with IEEE-485-1997 (Ref. 5.3), and verify the acceptability of the installed battery. Determine the minimum required terminal voltage to support the operation of essential equipment.

1.2 Device Voltage

Determine the available voltage at electrical devices during required operating scenarios, and compare these values to minimum required operating voltages.

1.3 Short Circuit

Determine the maximum available short circuit current at nodes within the system, and verify the acceptability of the short circuit ratings of the protective devices at each of these nodes.

1.4 Charger Sizing

Verify Battery Charger 22 is sized to supply the normal dc loads, and to recharge the battery following a design basis discharge within 15 hours while supplying the normal load.

2. Method of Analysis

2.1 Battery Sizing, Load Flow, & Voltage Drop Methodology

The system battery sizing, load flow, device voltage, and short circuit analysis will be performed using DCSDM. The DCSDM program (Version 3.0) has been reviewed and is classified as Class A software on the IP2 SQA Program Conformance Matrix. As such, this program has been verified and validated for use on QA calculations and analysis.

The purpose of the DCSDM is to support the development and maintenance of the battery calculations. The DCSDM is a Microsoft Windows based client server database that is composed of a combination of files that contain data on each battery device and associated cables. The DCSDM also provides a method capable of performing voltage drop calculations to each device. The DCSDM is

capable of generating reports that will document the results of the analysis. The DCSDM provides the analysis tools required to store and manipulate the data for each calculation.

The DCSDM performs iterative load flow/voltage drop calculations and short circuit calculations for up to 200 nodes. The DCSDM also performs battery cell sizing calculations and determines battery terminal voltage for each minute during discharge. These calculations are based on IEEE Standard 485-1997 (Ref. 5.3) and industry-accepted practice.

The DCSDM contains detailed operating and loading information for each electrical device in the DC system. The DCSDM database is populated using sources listed in the design input and reference sections of this calculation. Reports of this data will be compiled and a summary of the loads at each node for each time step of the scenario under review will be generated. In addition, the database contains interconnection information of the DC system. The interconnection information is depicted in Attachment N.

Iterative load flow/voltage drop calculations will be performed to calculate the node voltages and currents based on the loads that are operating as defined in the DCSDM. The resultant battery terminal voltage versus time for each profile will be determined using vendor supplied battery discharge characteristic curves (entered into the DCSDM battery library). These calculated voltages include temperature and end of life correction factors.

The battery sizing methodology of IEEE-485-1997 (Ref. 5.3) accounts for minimum battery voltage requirements and the battery terminal voltage method yields slightly conservative results. Therefore, the battery sizing calculation will be performed utilizing the minimum required terminal voltage determined as described in Section 2.2 utilizing the vendor supplied discharge characteristic curves as entered into the DCSDM library.

The end result of this process is calculated voltages at each significant node in the DC system for each time step of each scenario. These voltages are calculated based on the expected loading at each node for the scenarios under review.

Once these nodal voltages are calculated, voltage drop calculations for each electrical device that is expected to operate can then be performed by DCSDM. The DCSDM report generator will generate the various reports included as attachments to the battery calculation documentation. These calculations will be performed using simple circuit analysis illustrated in Figures A, B, & C.

For these analyses, selected devices will be modeled as described below. The method of selecting these devices is described in Section 2.3. Those devices not modeled as described below will still be accounted for in the voltage analysis. The minimum required voltage for all devices modeled (other than resistors and lights) will be compared to their respective bus voltages for each battery.

Starting at the node, each required operating path will be analyzed to each device specified. Each segment of the path will be reviewed to determine cable size and length as well as all devices that will cause current to be flowing through the segment. Load currents for constant impedance devices will be conservatively calculated using the node voltage. The individual segment voltage drops will be added together and subtracted from the node voltage to determine the voltage at the device. These values will then be compared to the minimum required operating voltage for each device (pickup voltage for relays) plus one volt to account for voltage drop due to internal wiring and contact resistance.

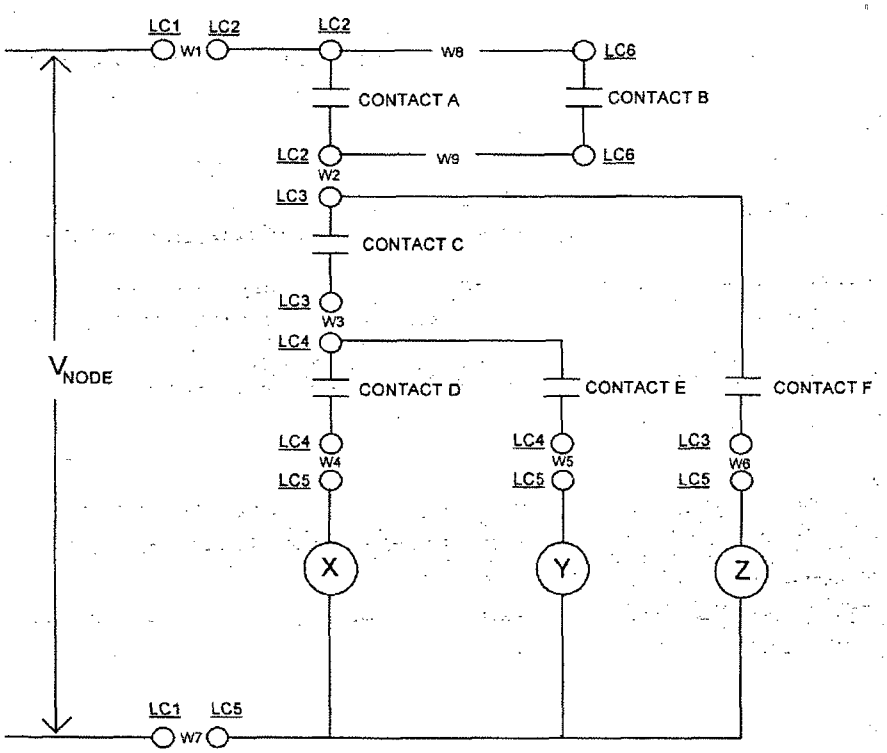

LC1 = Location Code
W1 = Wire Number

Figure A - Sample Schematic

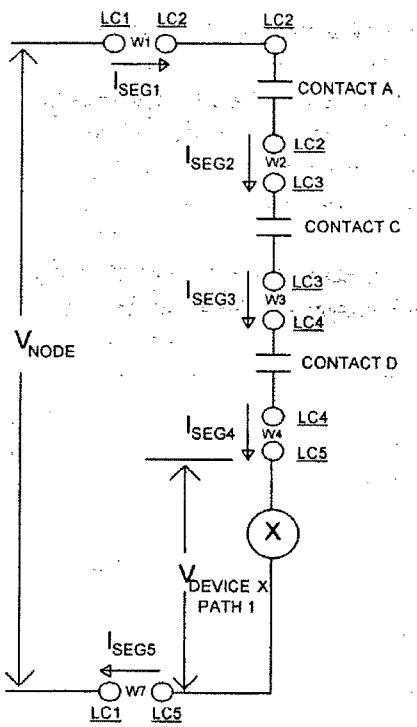

PATH 1 TO X

$$I_{SEG1} = I_{CORR\,(DEVICE\ X)} + I_{CORR\,(DEVICE\ Y)} + I_{CORR\,(DEVICE\ Z)}$$

$$I_{SEG2} = I_{CORR\,(DEVICE\ X)} + I_{CORR\,(DEVICE\ Y)} + I_{CORR\,(DEVICE\ Z)}$$

$$I_{SEG3} = I_{CORR\,(DEVICE\ X)} + I_{CORR\,(DEVICE\ Y)}$$

$$I_{SEG4} = I_{CORR\,(DEVICE\ X)}$$

$$I_{SEG5} = I_{CORR\,(DEVICE\ X)} + I_{CORR\,(DEVICE\ Y)} + I_{CORR\,(DEVICE\ Z)}$$

$$V_{DEVICE\ X\ PATH\ 1} = V_{NODE} - (I_{SEG1} * R_{W1} + I_{SEG2} * R_{W2} + I_{SEG3} * R_{W3} + I_{SEG4} * R_{W4} + I_{SEG5} * R_{W7})$$

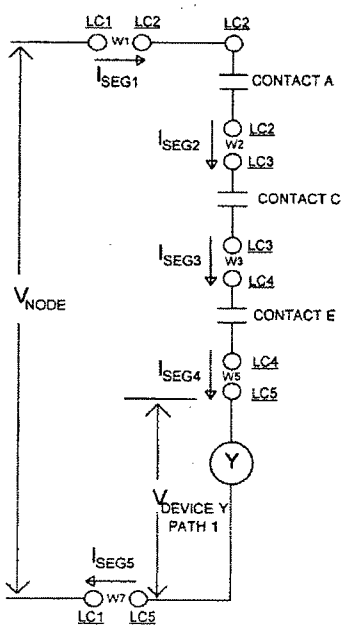

PATH 1 TO Y

$$I_{SEG1} = I_{CORR\,(DEVICE\ Y)} + I_{CORR\,(DEVICE\ X)} + I_{CORR\,(DEVICE\ Z)}$$

$$I_{SEG2} = I_{CORR\,(DEVICE\ Y)} + I_{CORR\,(DEVICE\ X)} + I_{CORR\,(DEVICE\ Z)}$$

$$I_{SEG3} = I_{CORR\,(DEVICE\ Y)} + I_{CORR\,(DEVICE\ X)}$$

$$I_{SEG4} = I_{CORR\,(DEVICE\ Y)}$$

$$I_{SEG5} = I_{CORR\,(DEVICE\ Y)} + I_{CORR\,(DEVICE\ X)} + I_{CORR\,(DEVICE\ Z)}$$

$$V_{DEVICE\ Y\ PATH\ 1} = V_{NODE} - (I_{SEG1} * R_{W1} + I_{SEG2} * R_{W2} + I_{SEG3} * R_{W3} + I_{SEG4} * R_{W5} + I_{SEG5} * R_{W7})$$

Figure B - Sample V_{DEVICE} Calculation

Path	Segment	Alternate Device
1 To X	1	Y, Z
	2	Y, Z
	3	Y
	4	None
	5	Y, Z
1 To Y	1	X, Z
	2	X, Z
	3	X
	4	None
	5	X, Z
1 To Z	1	X, Y
	2	X, Y
	3	None
	4	X, Y

Refer to Figure A & B for Sample Schematic and Paths

Figure C

Sample Path, Segment, Alternate Device

Listed below are variables and calculated values used in the DCSDM.

Variables

V_N = Node Voltage calculated by DCSDM @ Time step specified

V_{Rated} = Rated Device Voltage

V_{Min} = Minimum Device Pick-up or Operating Voltage

I_{Inrush} = Inrush current at V_{Rated}

$Load_{Rated}$ = Rated Load of Device @ V_{Rated} (Amps, Watts, Ohms or HP)

NC = Number of parallel conductors of segment

Length = Length of Segment in feet

$Temp_{VD}$ = Cable Temperature in deg. C used for Voltage Drop Calculations (90° C shall be used)

R_{75} = Cable Resistance/1000 ft @ 75° C of Segment

Qty = Quantity of Devices

Div = Diversity associated with device. This is a number between 0 and 1.

Calculated Values

R_{Seg} = Total Cable Resistance of Segment @ $Temp_{VD}$)
= Length * (R_{75} * (1+ a * ($Temp_{VD}$ - 75))) / (NC * 1000)
Where a = .00323 for copper wire or .00330 for aluminum wire per National Electric Code, 1999 (Ref. 5.6)

I_{Rated} = Device current in Amps DC (ADC) at its Rated Voltage

= $Load_{Rated}$ ($Load_{Rated}$ given in Amps)

= $Load_{Rated}/V_{Rated}$ ($Load_{Rated}$ given in Watts)

= $V_{Rated}/Load_{Rated}$ ($Load_{Rated}$ given in Ohms)
= 746 * $Load_{Rated}/V_{Rated}$ ($Load_{Rated}$ given in Horsepower)

I_{corr} = Device current in ADC at V_N for constant impedance (Z) devices, at V_{Min} for constant power (P) devices.

P = Power

Z = Impedance

I_{Corr} for Constant Z Devices = Qty * Div * (V_N/V_{Rated}) * I_{Rated}

I_{Corr} for Constant P Devices = Qty * Div * (V_{Rated}/V_{Min}) * I_{Rated}

I_{Corr} for Devices at Inrush = Qty * Div * (V_N/V_{Rated}) * I_{inrush}

I_{Seg} = Total Segment current in DC Amps (ADC)

= I_{Corr} (Main Device)+ Σ I_{Corr}(Alternate Devices)

VD_{Path} = Total voltage drop through path

=Σ (I_{Seg} * R_{seg})

V_{Device} = Voltage at Device

= V_N - VD_{Path}

V_{Accept} = A device is acceptable if $V_{Device} \geq (V_{Min} + 1$ Volt). Devices that do not meet this requirement will be identified as devices requiring additional analysis.

2.2 Methodology for Determining Minimum Required Battery Terminal Voltage

The minimum required terminal voltage is the minimum voltage required to support operation of the devices that are currently calculated to have adequate voltage. This voltage is determined from a review of Attachments B and F. This review will be documented in Section 6.4. Assuming that devices requiring further analysis are dispositioned adequately and are acceptable with this lower terminal voltage, the voltage value is determined based on the device with the lowest positive voltage delta and the lowest calculated terminal voltage for the battery. Devices with a negative voltage delta are listed for further analysis in Attachment C. The minimum acceptable battery terminal voltage is determined by subtracting the minimum positive delta from the battery terminal voltage at the time step where this delta is determined. The minimum acceptable terminal voltage is then used in determining the installed design margin for the battery.

2.3 Methodology for Selecting Devices for Path Voltage Drop Analysis

One of the objectives of the calculation is to provide reasonable assurance that all safety related devices powered by the system have adequate voltage to perform their function for the scenarios in which they are required to operate. A complete and detailed evaluation of every safety related system component is not necessary to achieve this objective.

Examples of safety related devices powered by the 125VDC system consist of 6.9kV and 480V electrically operated breakers, inverters, control relays, and solenoids.

Based on industry experience and engineering judgment there are specific devices prone to voltage drop issues. These devices include emergency diesel panel controls as they have a high number of interlocks, and electrically operated breakers, as they also have a high number of interlocks and draw a significant current. In order to address devices prone to voltage drop issues, individual voltage calculations are performed.

The devices selected for which individual voltage calculations are performed are as follows:

- All of the 6.9kV and 480V breakers that operate during the duty cycle will be evaluated. Path voltage drop analysis will be performed for each 6.9kV close coil that operates during the event as well as selected 6.9kV and 480V trip coils. Path voltage drop analysis will not be performed for the 480V breaker close relays as the current draw for these relays is less than 0.1 amp. The analysis is not necessary for these relays as they are interposing relays for the breaker closing solenoid and draw a very small current resulting in minimal voltage drop.

- All stand-alone inverters (excluding those incorporated into various power supplies). The inverter terminals are modeled as system nodes and will have no path segments.

Individual smaller loads are not analyzed in this detail since the small current required by the device will result in a small voltage drop from the node to the device. As noted in Section 2.1, the DCSDM automatically adds 1 volt to the minimum operating voltage for the individual devices.

2.4 Short Circuit Methodology

Maximum available short circuit current calculations will be performed for each of the nodes for which load flow was performed as well as for the battery chargers. Equivalent fault contributing impedance values are required for the battery, the chargers and any motors that could provide fault contribution. The

battery contribution is based on maximum values provided by the battery manufacturer. The charger contribution is based on its current limiting value and normal float voltage operation. The normal float voltage is used since it is the normal operating configuration for the system.

The short circuit portion of DCSDM uses pre fault node voltages based on normal float operation. For conservatism, the short circuit calculation will be performed for an unloaded condition. This will result in slightly higher pre fault node voltages and thus slightly higher short circuit current values.

Breaker contact resistances are not included in the short circuit calculation as they would result in values that are less conservative than those arrived at without them.

2.5 Battery Charger Sizing Methodology

This section outlines the method used to verify the battery charger has sufficient capacity to recharge the battery from a discharged state while supplying the normal system load.

The charger current A, required to recharge the battery is calculated using the following formulas (IEEE Std. 946-1992, Ref. 5.4).

Equation 1: $$A = \frac{AH * 1.1}{T} + L$$

Equation 2: $$A = L + L_n$$

Where

A	=	Required battery charger rating in amperes (Larger of the values determined by Equation 1 and Equation 2)
AH	=	Total ampere-hours discharged from battery
1.1	=	Constant to compensate for battery losses (to allow for AH efficiency)
L	=	Continuous DC load in amperes
L_n	=	Largest combination of noncontinuous loads that would likely be connected to the bus simultaneously during plant operation
T	=	Required maximum time to recharge the battery in hours

From Equation 1, the actual recharge time (T_a) of the discharged battery becomes:

$$T_a = \frac{AH * 1.1}{A - L}$$

2.6 Scenario and Load Profile Development

The following steps were used to determine the design basis events that the Indian Point Unit 2 Batteries are required to mitigate:

- Identify the major events that the class 1E batteries may be required to mitigate by reviewing the FSAR, Technical Specification, SBO documentation and existing calculations.
- Review each event and determine if it is within the Indian Point Unit 2 design basis. Only events within the Indian Point Unit 2 design basis will be considered for additional analysis on the battery system.
- Identify an enveloping set of events that need to be considered as the DBA scenarios for the battery analysis. The enveloping events will be selected based on a review of each scenario to determine what major loads (e.g. breaker operation, EDG starting) will be imposed on the batteries, the time and the magnitude of the loads, duration for which batteries may have to supply various loads and the terminating event(s), which will restore the battery charger.
- Review documentation and determine the initial conditions and the initiating events for each enveloping scenario.
- Determine the case time steps and what major DC equipment operates in each time step for each enveloping DBA.
- Review the enveloping DBA cases to determine if they can be combined into a single enveloping composite scenario.

3. Assumptions

3.1 Load Flow & Voltage Drop Assumptions

3.1.1 The voltage drop and load flow calculations in DCSDM will be calculated using a conductor temperature of ~~90°C~~ 75°C which corresponds to the highest expected temperature rating for cables in the system. The assumption is conservative since not all power cables will operate at their temperature rating, and control cables will be close to the ambient temperature.

3.1.2 For constant resistive devices, the device current for the path voltage drop will be based on the assumption that the node voltage is at the terminals of

the device. This will produce a calculated voltage drop larger than the actual voltage drop and a conservative result.

3.1.3 For constant power devices, the device current for the path will be based on the assumption that the device is operating at its minimum operating voltage. This will produce a calculated voltage drop larger than the actual voltage drop and a conservative result.

3.1.4 Alternate devices will be considered operating at the specified diversity in the path segment voltage drop for all time steps that the analyzed device is on. This assumption may have current flowing for an alternate device that is actually off. Therefore, the calculated voltage drop will be larger than the actual voltage drop.

3.1.5 Loading for Battery 22 will be modeled to reflect the load conditions expected during the postulated scenario. If the operation of a device is unknown, it will be modeled as energized for conservatism. If a load is modeled at a diversity of other than 0 or 1, an explanation and/or justification will be provided within the database for clarity. Loading explanations for the larger, significant loads (such as inverters) are provided as separate assumptions. For all circuits, indicating lights will be modeled based on the quantity of lights expected to be energized during steady state conditions.

3.1.6 The voltage drop due to electrical penetrations, jumpers, internal wiring, and contact resistance is conservatively accounted for by assuming that the minimum required voltage at the device must be equal or greater than the device minimum required voltage plus one volt. Jumpers and internal wiring account for a very small amount of resistance in the circuit due to their very limited lengths. Voltage drop due to contact resistance is also relatively minor.

3.1.7 The 1kVA inverters supplied by Battery 22 will be modeled as fully loaded for the entire scenario. 10kVA Inverter 22 is modeled using the 110% of the highest recorded current from Attachment V (SOMs data). Although inverter loading calculations exist, the values calculated therein do not reflect appropriate values to use in these calculations as their purpose and assumptions are different.. 10kVA Inverter PA is modeled using data documented in Attachment Y.

3.1.8 For components where the rated load is not known, the loading will be assumed to be the value for the largest known load for similar components (i.e. unknown solenoids will use the largest rating for solenoids). Likewise if the minimum voltage is unknown, the largest value for similar components will be used. If a similar component is not found, then a value of 100 volts for the 125 volt system will be assumed for the minimum operating voltage for constant impedance type loads. This

assumption is based on a typical minimum operating voltage of 80% of the rated value of 125VDC.

3.1.9 Deleted

3.1.10 Per Indian Point direction documented in Attachment T, unknown relays will be modeled utilizing Westinghouse BFD relay characteristics.

3.1.11 Component specific assumptions are listed in Attachment P

3.1.12 To compensate for intercell connection resistance above the manufacturer's expected values, additional cable length is added to the cable supplying the system from the battery. Procedure PT-A35A (Ref. 5.8) was reviewed to determine the expected increase in connection resistance. The additional resistance is determined in the following manner:

Procedure PT-A35A indicates the baseline values and the allowed increase in resistance for each cell. Also, the "plate-plate" readings for the inter-tier and inter-rack connections are not included as these values are already accounted for in the post-to-post readings for the affected cells. The total allowed increase for all cells will be modeled as an additional length of 500 MCM cable (2 per pole) between the battery terminals and the first downstream node.

From PT-A35A, the total allowable resistance increase for the inter-cell readings is 362 micro-ohms.

This impedance is equivalent to x feet of 500 MCM cable by the following equation:

$$Lft = \frac{R_{Total}\Omega}{R_{Cable}\Omega / ft} = \frac{0.000362 * 2}{0.0000265} = 27.3 ft$$

Thus, an additional 14 feet is added to the one-way cable length of the cable supplying the system. This additional length is used for the load flow and voltage drop calculations only and is removed for the short circuit calculations.

3.2 Short Circuit Assumptions

3.2.1 The short circuit calculations will be performed using a conductor temperature of 25°C. This conductor temperature will produce a lower cable resistance than expected, and therefore a conservative result.

3.2.2 The battery charger current value at the current limit setting will be used for performing short circuit calculations. The current limit value for Battery Charger 22 is 287.5 amps (Ref. 5.10).

3.2.3 The maximum float voltage (135.5 Vdc, Ref. 5.9) will be used when performing the short circuit calculation. Battery short circuit impedance is obtained from cell manufacturer documentation.

3.2.4 The maximum battery short circuit contribution will be determined using battery specific vendor data (attachment W) in accordance with IEEE946-1992 (ref 5.4). For the data provided, the equation becomes:

$I_C = E_C / (V_1 - V_2) / (I_2 - I_1)$ where

I_C is the available short circuit current (in amperes)
E_C is the nominal cell voltage (2.00 volts)

Substituting 1.75 as V_1 and 1.50 as V_2 results in

$I_C = 2.0 / ((1.75 - 1.50) / (4430-2100))$

$I_C = 18640$ Amps.

3.3 Battery Sizing Assumptions

3.3.1 The minimum assumed battery temperature for Battery 22 is ~~60~~ 59°F (Ref. 5.21). and 5.9 HL

3.3.2 The design margin for the battery is assumed to be 1.0 since the battery sizing calculations are being performed on an existing battery. Actual available battery margin is calculated as part of the battery sizing calculation.

3.3.3 An aging factor of ~~1.11~~ 1.176 (representing a ~~90%~~ 85% aged battery) is assumed for the battery calculations. HL

3.4 Scenario and Load Profile Development Assumptions

3.4.1 An electric fault (single line to ground, double line to ground or three phase) on the AC electrical distribution system does not occur prior to or during the DBA.

3.4.2 An electric fault (positive to ground, negative to ground, or positive to negative) on the DC electrical distribution system does not occur prior to or during the DBA.

3.4.3 Only the equipment failures indicated in the scenario will occur. All other

equipment will operate as designed within the design tolerances of the equipment.

3.4.4 Testing of a system or equipment prior to or during the DBA will not be considered in the battery system analysis.

3.4.5 All buses are assumed to be supplied from their normal source prior to the DBA.

3.4.6 All transfer switches and relays are aligned to their normal source prior to ~~and during~~ the DBA. All automatic transfers will occur based on the scenario being considered. NR

3.4.7 The pre-DBA status of mechanically and electrically operated breakers with only local control (without any auto or remote control) will only be changed during the DBA if procedures dictate repositioning the breaker.

3.4.8 A fire will not occur concurrently with the scenarios postulated in this calculation.

3.4.9 Loads for which the exact time of operation cannot be determined are assigned to multiple time steps so that their expected range of operating times is covered. Breaker operations associated with SBO recovery are known not to occur within the first minute, so they are all modeled in the last minute which is where they have the most severe impact on the battery.

3.4.10 The EDG output breaker will close (assuming bus is not powered) 10 seconds after receipt of a start signal from either an under-voltage or safety injection signal. (Ref. 5.12)

3.4.11 A unit trip is assumed to occur simultaneously with a loss of off-site power.

3.4.12 Battery charger failure will not cause breaker or other significant equipment operations other than the trip of its own input breaker.

3.4.13 The AC circuit breakers are conservatively modeled as taking one second to operate.

3.4.15. Switchover to SI Recirculation Phase occurs at t=20 minutes. (Ref. 5.12)

3.5 Battery 22 Initial Condition Assumptions

3.5.1 The AC circuit breakers are assumed to be in the following positions just prior to the event ($t=0^-$):

3.5.1.1 52/RCP22 is Closed (Reactor Coolant Pump 22 is Running)

3.5.1.2 52/CP23 is Closed (Condensate Pump 23 is Running)

3.5.1.3 52/CWP26 is Closed (Circ Water Pump 26 is Running)

3.5.1.4 52/UT3 is Closed (Bus 3 Supplied by UAT)

3.5.1.5 52/UT3-ST6 is Open (Bus 3-6 Tie Open)

3.5.1.6 52/22RW3 is Closed (Sub Sta 22RW3 XFMR is Energized from Bus 1)

3.5.1.7 52/UT4-ST6 is Open (Bus 4-6 Tie Open)

3.5.1.8 52/SS3 is Closed (Station Transformer 3 is Energized)

3.5.1.9 52/CWP24 is Closed (Circ Water Pump 24 is Running)

3.5.1.10 52/RCP23 is Closed (Reactor Cooling Pump 23 is Running)

3.5.1.11 52/UT4 is Closed (Bus 4 Supplied by UAT)

3.5.1.12 52/SS6 is Closed (Station Service Transformer 6 is Energized)

3.5.1.13 52/GT26 is Open (Gas Turbine Gen 1 & Bus 6 Tie)

3.5.1.14 52/CWP22 is Closed (Circ Water Pump 22 is Running)

3.5.1.15 52/ST6 is Closed (Supply to Bus 6 from Station Aux Transformer)

3.5.1.16 52/2A is Closed (Supply breaker from Station Service XFMR 2)

3.5.1.17 52/EG2A is Open (EDG 22 Output Breaker is Open)

3.5.1.18 52/SI2A is Open (Safety Injection Pump 22 is Off)

3.5.1.19 52/CRF3 is Closed (Containment Recirc Fan 23 is Running)

3.5.1.20 52/PBU2 is Closed (Pressurizer Heater B/U Grp 22 Distribution Panel is Energized)

3.5.1.21 52/MCC8A is Closed (MCC 28A is Energized)

3.5.1.22 52/CC2 is Closed (Component Cooling Pump #22 is Running)

3.5.1.23 52/MCC1 is Closed (MCC 21 is Energized)

3.5.1.24 52/LT1N is Closed (Normal Supply to Lighting Transfer Switch 22 is Closed)

3.5.1.25 52/MCC24A-MCC24 is Closed (MCC 24 and 24A are Energized)

3.5.1.26 52/SW2 is Closed (Service Water Pump 22 is Running)

3.5.1.27 52S/W5B is Closed (Service Water Pump 25 is Running)

3.5.1.28 52/MCC3 is Closed (MCC 23 is Energized)

3.5.1.29 52/HDP21 is Closed (Heater Drain Pump 21 is Running)

3.5.1.30 52/MG1 is Closed (Rod Power MG Set 21 is Running)

3.5.1.31 52/2AT5A is Open (Bus 2A-5A Tie Open)

3.5.1.32 52/2AT3A is Open (Bus 2A-3A Tie Open)

3.5.1.33 52/HDP22 is Closed (Heater Drain Pump 22 is Running)

3.5.1.34 52/MCC10 is Closed (MCC 210 is Energized)

4. Input and Design Criteria

The following acceptance criteria will be used:

4.1 Battery Size

The required battery size, as calculated using the IEEE-485-1997 (Ref. 5.3) methodology, must be less than or equal to the installed battery size. This is determined by comparing the number of positive plates calculated to the actual number of positive plates for the installed battery. Battery 22 consists of 58 Exide GN-23 cells. These cells have 11 positive plates, therefore the positive plates required must be less than or equal to 11. Additionally, it is desirable that the battery has a design margin greater than 5% to allow for slightly diminished battery capacity immediately following recharge from a discharged state.

4.2 Device Voltage

Device voltage calculations fall into one of two categories. For some devices, voltage was calculated at the device terminals using the methodology described in Section 2.1. For these devices, the acceptance criteria is that the calculated available voltage at the device must be equal to or greater than the minimum rated operating voltage of the device plus one volt. The minimum rated operating

voltage for each device is identified in the DCSDM Component Library with the appropriate reference.

The balance of devices are typically located at or near the node, for example breaker closing solenoids and auxiliary relays are located at the switchgear. For these devices, the calculated available voltage at the node must be equal to or greater than the minimum rated operating voltage plus one volt. One volt is added to account for inter-panel wiring and contact resistance.

For individual devices with coils (e.g. relays, solenoid valves, etc.), the minimum required pickup voltage will be used as the required operating voltage (hold-in voltage is not used).

4.3 Short Circuit

The equipment and protective device short circuit ratings at the selected nodes must be greater than the maximum calculated short circuit values. The short circuit values and limiting ratings at each node are provided in Attachment I.

The limiting short circuit rating for each node is based on the protective device with the lowest interrupting capability.

The short circuit capability of the cables is not evaluated as part of this calculation.

4.4 Charger Sizing

Battery Charger 22 is sized such that it is capable of restoring Battery 22 from the discharged condition resulting from the accident scenario to its fully charged condition within 15 hours while supplying the steady state system load. (Section 8.2.3.5 of Ref. 5.2)

5. References

5.1 Indian Point 2 Technical Specifications

5.2 UFSAR Chapter 8, Rev. 16

5.3 IEEE 485-1997, "Recommended Practice for Sizing Large Lead Storage Batteries for Generating Stations and Substations"

5.4 IEEE 946-1992, "Recommended Practice for the Design of DC Auxiliary Power Systems for Generating Stations"

5.5 "DCSDM User's Guide" Version 3.0, Rev. 1

5.6 National Electrical Code – 1999, Chapter 9 Table 8

5.7 Component Specific Data Sheets (Attachment S)

5.8 PT-A35A, "22 Station Battery Intercell Resistance Checks", Rev. 0

5.9 PT-Q 1A, "22 Station Battery Surveillance and Charging", Rev. 1

5.10 Solid State Controls, Instruction Manual for Battery Charger Model BCS12250

5.11 Document No. 125V DBD, "Design Bases Document for the 125V DC Batteries and Distribution System", Rev. 0, Dated May 1999

5.12 FEX-00148 "Emergency Diesel Generator Loading Study", Rev. 00

5.13 Specific drawing references utilized in the scenario development are located in Attachment O.

5.14 References used in the DCSDM database for Battery 22 are contained in Attachment R.

5.15 Letter dated November 21, 1991 from Francis J. Williams, Jr. of the NRR to Mr. Stephen B. Bram of Consolidated Edison Company, "Safety Evaluation of the Indian Point Nuclear Generating Unit No. 2, Response to the Station Blackout Rule (TAC No. M68556)"

5.16 IEEE 450-1995, "IEEE Recommended Practice for Maintenance, Testing, and Replacement of Vented Lead-Acid Batteries for Stationary Applications"

5.17 Letter dated September 18, 2003 from Richard Milici of Entergy to Jim Hausser of Framatome, " DBI CLC-2-3-1 125 VDC Load Study Open Item Resolution" (Attachment X)

5.18 System Description No. 27.3, Rev. 7, "Emergency Diesels"

5.19 Inverter Loading from SOMs Operator Logs (Attachment V)

5.20 Exide Battery Information for GNB-23 Cells (Attachment W)

5.21 UE&C Calculation 9321-01 Page G6228

5.22 United Engineers & Construction Specification 9321-01-113-8, "600V, Single Conductor, Power Cable For General Use In All Areas Other Than The Reactor Containment Building"

5.23 United Engineers & Construction Specification 9321-01-113-7, "600V, Multi-Conductor, Control And Small Power Cable For General Use In All Areas Other Than The Reactor Containment Building"

5.24 Letter dated July 1, 2004 from Tom Horner (IP2) to Robert Fletcher (FANP), Nuclear Design Information Transmittal (Attachment T)

Except for those documents provided as attachments to this calculation or generated by FANP, all documents referenced in this calculation and within the DCSDM Database (used to perform these calculations) are not available for entering into the FANP Records Management and have been used for design information with the Project Manager's written approval.

P.M. Concurrence: _____ John F Michael 4/5/06 Date

6. Analysis

The calculation is performed by DCSDM.

6.1 Node Definitions

Attachment A provides the node numbers, names and description.

6.2 Node Voltages & Currents

Attachment F provides the node voltages and Attachment G provides the node currents for scenario (CMP22).

6.3 Scenario and Load Profile Development

6.3.1 Scenario Identification

A review of the FSAR, Technical Specifications, DBD, and Station Blackout (SBO) Documentation was performed to determine the specific licensing commitments for the battery.

The scenarios to be examined for the Indian Point Unit 2 DC system are:

1. Normal Operation
2. Startup, Shutdown, and Refueling Operations
3. SI with Off-Site Power Available
4. Loss of Off-Site Power (LOOP) with no SI
5. Loss of Off-Site Power (LOOP) concurrent with a Safety Injection (SI)
6. Station Blackout (SBO)

Section 8.1.2.1 of the FSAR (Ref. 5.2) states that, under normal conditions, each battery charger supplies its DC loads while keeping the battery fully charged. The battery provides power to the DC loads when the battery charger is not available. Section 8.2.3.5 of the UFSAR states that each battery is sized to carry its expected shutdown loads for a period of 2 hours following a plant trip and loss of all AC power. In addition, a requirement exists for the battery to supply the shutdown loads for one hour in the event of a Station Blackout (SBO). In this case, restoration of power to the battery chargers should be assumed from a gas turbine, return of normal off-site power, or successful start of the emergency diesel generator.

6.3.2 Normal Operation and Startup, Shutdown, and Refueling Operations Scenarios

Battery Sizing and System Minimum Voltage Study

The battery charger is assumed to be available for these scenarios as they do not involve a loss of AC power to the charger. A failure of the battery charger will not cause breaker or other significant equipment operations. The batteries will be subjected to loading that is enveloped by an accident scenario involving multiple breaker operations associated with load sequencing (safety injection or loss of off-site power).

6.3.3 SI with Off-Site Power Available

The sequence of events for this scenario begins with receipt of a SI signal. The initial conditions for the 6.9kV system are the same as those assumed for the other events. Since off-site power is still available, the EDG starts but the output breaker does not close. The loading sequence for the SI loads begins at t=0s instead of t=10 seconds since there is no undervoltage signal present for the essential buses. The switchover to SI recirculation phase is modeled at t=20 minutes. The details of the breaker timing are located in Attachment O.

Battery Sizing and System Minimum Voltage Study

The battery charger is assumed to be available for this scenario as it does not involve a loss of AC power to the charger. However, for the purposes of this analysis, the battery charger will be assumed to fail concurrently with the SI signal. The failure of the battery charger will not cause breaker or other significant equipment operations.

The equipment operations are depicted in the attached tables. The equipment operation due to this scenario will be compared to the operations associated with the other accident scenarios to generate an enveloping composite scenario.

6.3.4 Loss of Off-Site Power (LOOP) Without a Concurrent Safety Injection (SI)

The sequence of events for this scenario begins with a loss of offsite power. The 6.9kV buses are assumed to be aligned to their normal power sources as described in the FSAR. Buses 1, 2, 3, and 4 are supplied by the Unit Aux Transformer. Buses 5 and 6 are assumed to be supplied by the

Station Aux. Transformer. The individual operations of the 6.9kV breakers are documented in Attachment O.

The EDG receives a start signal at t=0 due to an undervoltage condition on the essential 480 volt bus concurrent with a unit trip. The individual breaker operations are modeled as described for the LOOP with SI case with the breaker closures that are expected from a SI signals removed. The details of the breaker timing are located in Attachment O.

Since the EDGs are assumed to be operational for this event, termination of the event is modeled to occur with closure of the breaker feeding the MCC that supplies the battery charger. The charger is then assumed to supply the DC loads and begin charging the battery.

Battery Sizing and System Minimum Voltage Study

The battery charger is not available for this scenario due to the loss of AC power to the charger.

The equipment operations are depicted in the attached tables. The equipment operation due to this scenario will be compared to the operations associated with the other accident scenarios to generate a composite enveloping scenario.

6.3.5 Loss of Off-Site Power (LOOP) concurrent with a Safety Injection (SI)

The sequence of events for this scenario begins with a simultaneous loss of offsite power and a safety injection signal. The 6.9kV buses are assumed to be aligned to their normal power sources as described in the FSAR. Buses 1, 2, 3, and 4 are supplied by the Unit Aux Transformer. Buses 5 and 6 are assumed to be supplied by the Station Aux. Transformer. The individual operations of the 6.9kV breakers are documented in Attachment O.

The load sequencing on the EDG is controlled by time delay relays that actuate upon restoration of power to the essential 480 Volt Buses. Bus 2A is energized ten seconds into the event when the EDG output breaker closes (Assumption 3.4.11). The time delay relays are then assumed to start timing at t=10 seconds. Switchover to SI recirculation phase is modeled at t=20 minutes. The breaker closures are modeled using two time steps that total one second. The close relay is modeled as energized for the first tenth of a second to allow the voltage to be calculated at this relay prior to actuation of the closing solenoid. Both the close relay and

the closing solenoid are assumed energized for the remainder of the second. The time delay relays provide for a minimum of three seconds between breaker closures during the sequencing. Since the actual operation of the breaker will be much less than 1 second in duration and the time delay relays provide for at least three seconds separation in breaker closures, concurrent breaker operations during the load sequencing will not be modeled. Additionally, the manual operations required to restore power to the charger will not be modeled to occur concurrently with automatic breaker operations.

Since the EDGs are assumed to be operational for this event, termination of the event is modeled to occur with closure of the breaker feeding the MCC that supplies the battery charger. The charger is then assumed to supply the DC loads and begin charging the battery.

Battery Sizing and System Minimum Voltage Study

The battery charger is not available for this scenario due to the loss of AC power to the charger.

The equipment operations are depicted in the attached tables. The equipment operation due to this scenario will be compared to the operations associated with the other accident scenarios to generate a composite enveloping scenario.

6.3.6 Station Blackout (SBO)

The Indian Point Unit 2 DC system is expected to mitigate a one-hour Station Blackout (LOOP and the EDG fails to start/develop voltage), with AC power restoration from an off-site gas turbine at the end of the hour. The EDG is assumed to fail to start with the field flash energized until the start sequence is terminated by detection of the EDG failure to start. The generator field flash is conservatively modeled to be energized for the first minute of the event. The event is terminated with breaker closures restoring AC power to the charger from an off-site gas turbine supply or other off-site source or a successful start of the EDG.

The initial positions for the 6.9kV breakers are the same as described for the other design basis scenarios. The individual operations of the 6.9kV breakers are documented in Attachment O.

Battery Sizing and System Minimum Voltage Study

The battery charger is not available for this scenario due to the loss of AC power to the charger.

The equipment operations are depicted in the attached tables. The equipment operation due to this scenario will be compared to the operations associated with the other accident scenarios to generate a composite enveloping scenario.

6.3.7 Composite Scenario Development

The operation of major equipment associated with each battery is depicted in spreadsheets located in Attachment O. The spreadsheets were developed to detail the operation of circuit breakers and other significant equipment during the scenarios discussed above. For some busses, more than one load may be shown as operating during a specified time step. If these loads are known to operate non-simultaneously, the higher magnitude load will be modeled as energized for battery sizing. If the loads are equal, the operating load is chosen at random. The other load will not be shown as energized but will have a voltage analysis performed. These loads are identified within the spreadsheets as having "Voltage Analysis Only".

Battery Sizing and System Minimum Voltage

For the Battery Sizing and System Minimum Voltage Analysis, it is clear that the *Normal Operation* and *Startup, Shutdown, and Refueling Operations* scenarios are enveloped by the each of the other five scenarios as described above.

From a review of Attachment O for the respective scenarios, it can also be shown that merging the *Loss of Off-Site Power (LOOP) Without SI* scenario and the *Loss of Off-Site Power (LOOP) Concurrent With a Safety Injection (SI)* will provide a limiting (enveloping) scenario with minimal difficulty. There are a few breaker operations that are different between the two scenarios. Otherwise, the conditions between the two scenarios are identical. The *SI With Off-site Power Available* scenario is enveloped by this scenario since the breaker sequencing is simply shifted by 10 seconds. Also, there are fewer 6.9kV breaker operations since no under voltage condition exists for this scenario

This leaves the *Station Blackout (SBO)* scenario to be addressed. The *Station Blackout (SBO)* is clearly enveloped by the *Loss of Off-Site Power (LOOP) Without SI* scenario. The SBO event only lasts for one hour while the other scenarios are two-hour scenarios. The breaker operations to restore offsite power modeled at the end of two hours in the composite scenario are similar to the breakers utilized in the SBO scenario. The

operation of these breakers at two hours is more conservative than operating them at one hour (as required in the SBO scenario).

6.4 Minimum Acceptable Battery Terminal Voltage

A review of all node voltages and required device voltages was performed to determine which devices have the lowest voltage margins. In order to provide a reasonable assurance that this voltage margin will be maintained for the critical devices, all devices with a positive voltage margin of less than 6.0 Vdc were examined. From this review, there are several devices that merit further investigation.

A list of devices with a positive voltage margin of less than 6 Vdc was developed from a review of Attachment B. A list of these devices sorted by node, then circuit and schematic is located in Attachment U. Notes documenting the acceptability of these loads are provided in this attachment.

A review of these loads shows the GEN REG INVERTER is the limiting device with a margin of ~~3.97~~ 1.36 volts. The minimum battery terminal voltage from Attachment F during the two hour scenario is ~~113.01~~ 110.60 volts. The minimum required battery terminal voltage as determined by the methodology outlined in Section 2.2 is then ~~113.01 – 3.97 = 109.04~~ 110.60 – 1.36 = 109.24 Vdc which will be rounded up to ~~109.1~~ 109.3 Vdc for the composite profile. HR

6.5 Battery Sizing

The battery sizing results for the scenario are provided in Attachment H. The battery sizing calculation is performed using the vendor performance curves for GN-23 cells. The minimum battery terminal voltage determined in Section 6.4 is utilized in determining the installed design margin.

6.6 Device Voltages

A listing of all devices for which voltage was calculated is provided as Attachment B. This listing is sorted by Node, then Circuit, then Schematic. This listing provides the calculated voltage for each device, the scenario and time steps for which it was analyzed, the required voltage, the difference between required voltage and calculated voltage and a column which lists whether the general acceptance criteria was met. A "W" in the time step listing means that the device is assumed energized in all time steps for a scenario and the lowest (Worst) node voltage for the scenario is being used in the analysis. Note that some fields contain data that is provided for information purposes only. In some cases this information exceeds the space allocated in the report field and thus some information becomes truncated. This information is available for review within the DCSDM Database (a controlled Class A database).

A listing of those devices which did not meet the general acceptance criteria and require additional analysis would be provided as Attachment C. However, all devices met the general acceptance criteria, so attachment C is not required.

6.7 Short Circuit

The result of the short circuit analysis is provided as Attachment I. The maximum available current under short circuit conditions for each node is listed.

6.8 Load Tabulation

Attachment J provides the load tabulation for the evaluated scenario.

6.9 Charger Sizing

From Section 2.5, the minimum charger rating is determined by two possible methods:

Equation 1: $A = \frac{AH * 1.1}{T} + L$

Equation 2: $A = L + L_n$

Where:

A = Required battery charger rating in amperes (Larger of the values determined by Equation 1 and Equation 2)

AH = Total ampere-hours discharged from battery

1.1 = Constant to compensate for battery losses

L = Continuous DC load in amperes

L_n = Largest combination of noncontinuous loads that would likely be connected to the bus simultaneously during plant operation

T = Required minimum time to recharge the battery in hours (15 hours per Section 8.2.3.5 of Ref. 5.2)

Time step 31 of scenario CMP22 represents a steady state condition for the battery system. This time step is the time following the first hour of the event where only the steady state loads are energized. The continuous load (L) for Battery 22 after charger restoration is represented by this steady state load during discharge (time step 31) less any loads that will not be present once the charger is restored. The remaining load consists of constant power and constant resistance loads. The inverters are the largest constant power loads. The load currents for the constant power loads are corrected for the equalize condition by decreasing by the ratio of the battery voltage (at time 31) to the equalizing voltage. The balance of the load is primarily resistive, therefore this load value will be increased (conservatively) by the ratio of the equalizing voltage to the inverter voltage during time step 31.

Thus, $L = (L_{31}-L_{INV}) * (V_{EQ} / V_{31}) + (L_{INV}) *(V_{31} / V_{EQ})$

Where:

V_{EQ} (Equalizing Voltage) (Ref. 5.9)	=	135.5 Vdc
V_{31} (Battery voltage at time step 31)	=	~~114.4~~ Vdc 112.7
L_{31} (Load at node 1 at time step 31)	=	~~187.7~~ Adc 198.2
L_{INV} (Load from the inverters at time step 31)	=	~~103.0~~ Adc 104.7

198.2 - 104.7 112.7 104.7 112.7

L = (~~187.7~~-~~103.0~~) * (135.5 / ~~114.4~~) + (~~103~~)*(~~114.4~~ / 135.5)

Therefore, L = ~~187.3~~ 199.5 amps

HR

From attachment L, the amp-hours removed from the battery during the composite scenario is ~~454.2~~ amp-hours. The charger current required to restore the battery to its fully charged state is then:

Utilizing Equation 1:

$$A = \frac{\cancel{467.2}\ 660.2 * 1.1}{15} + \cancel{187.3}\ 199.5$$

A = ~~221.5~~ amps 247.9

The battery charger rated output is 250 amps. The battery charger size is adequate using this method.

Solving Equation 1 for recharge time T and utilizing the rated charger current of 250 amps:

$$T_a = \frac{AH * 1.1}{A - L}$$

$$T = \frac{\cancel{467.2}\ 660.2 * 1.1}{250 - \cancel{187.3}\ 198.2}$$

T = ~~8.2~~ hours 14.0

Utilizing Equation 2:

L_n = The largest non-continuous load

= Close Solenoid from 480 Volt Breaker = 32A

$$A = \cancel{187.3}\ 198.2 + 32 = \cancel{219}\ 230.2 \text{Amps}$$

The calculated required current of ~~219~~ 230.2 Adc is less than the battery charger rated output of 250 amps.

The battery charger will be adequate to supply the system load while recharging the battery following a design basis event using either sizing method.

7. CONCLUSIONS

7.1 Scenario and Load Profile

A composite scenario and load profile has been developed as discussed in Section 6. The last minute of the composite scenario includes analysis for restoring power to the emergency buses via the emergency diesel generator or from an offsite power source. Scenario matrices for the various scenarios as well as the composite scenario are provided in Attachment O.

7.2 Battery Sizing

Battery 22 was shown to be adequately sized for the evaluated scenario and corresponding load profile. The acceptability of the GN-23 cells is based on the results of Attachment H. The battery size is determined using a minimum required battery terminal voltage of ~~109.1~~ 109.3 Vdc as determined in Section 6.4.

Scenario	Required Battery Size	Actual Battery Size	Spare Capacity
CMP22	~~7.00~~ 9.74 Positive Plates	11 Positive Plates	~~57.1~~ 12.9%

The installed design margin is greater than the acceptance criteria of 5% described in Section 4.1. The additional margin available (above the required 5%) is ~~52.1%~~. 7.9% This equates to approximately 115 amps of additional load applied throughout the profile.

The installed GN-23 cells are acceptable.

7.3 Device Voltage

All devices analyzed meet the acceptance criteria defined in Section 4.2. As described in Section 2.1, path voltage drop analysis to calculate the voltage at each device is not performed for all devices on Battery 22. For these devices, a comparison is made between the worst case node voltage and a conservative pickup voltage.

7.4 Short Circuit

The calculated short circuit current for each node is shown in Attachment I. The maximum available short circuit currents calculated for each node are below the maximum acceptable value.

7.5 Charger Sizing

Battery Charger 22 is capable of supplying all normal continuous loads while simultaneously restoring Battery 22 from its end of duty cycle condition to its fully charged condition.

Based on battery charger sizing calculation shown in Section 6.9, the recharge time for Battery 22 is ~~8.2~~ 14.0 hours with normal DC loads on the charger. This is less than the maximum allowed time of 15 hours and therefore acceptable.

Attachment A
Node Names and Description

By: Robert J. Fletcher Date: 8/26/05

Check: [illegible] Date: 8-26-05

Node Names and Description

Print Date: 08/24/2005 03:25 pm

Battery: 22

Node ID	Node Name	Breaker	Circuit ID	Circuit Description
1	B-22	BATTERY 22	BATT-22	BATTERY 22
2	PP-22	POWER PANEL 22 (PC2)	PP22	125V D.C. POWER PANEL 22 (PC2)
			PP22-13	SPACE
3	BC-22	BATTERY CHARGER 22	BC-22	BATTERY CHARGER 22
4	DP-22AA	DIST. PNL 22AA (EPF2)	DP22AA-01	POST ACCIDENT SOVS
			DP22AA-02	POST ACCIDENT SOVS
			DP22AA-03	POST ACCIDENT SOVS
			DP22AA-04	POST ACCIDENT SOVS
			DP22AA-05	POST ACCIDENT SOVS
			DP22AA-06	VARIOUS SOVS
			DP22AA-07	IVSWS VALVE 3518 LIMIT SW. & AUX RELAY 33X/3518
			PP22-01	125V D.C. DIST. PNL 22AA (EPF2)
5	DA5 XFR SW	DA5 TRANSFER SWITCH	DA5 XFR SW	DA5 TRANSFER SWITCH
6	PG5	EMERG LTG NO. 213 (PG5)	PP22-02-PG5	EMERG LTG NO. 213 (PG5)
7	PG9	EMERG LTG NO. 218 (PG9)	PP22-02-PG9	EMERG LTG NO. 218 (PG9)
8	DP-22A	DIST. PNL 22A (EPB1)	DP22A-02	RCS-OPS TRAN B RELAY PANEL
			DP22A-03	AFP #22 SOV 1311
			PP22-03	125V D.C. DIST PNL 22A (PC2)
9	INV-EGA6	1KVA INVERTER EGA6	DP22A-01	1KVA INVERTER EGA6
10	BUS 2A	480V SWGR 21 BUS 2A (NORMAL SUPPLY)	BUS 2A	480V SWGR 21 BUS 2A
11	EDG-23-E	DSL GEN 23 (EMERG SUPPLY)	DG23-CONTROL	DIESEL GEN 23
12	BUS 6A	480V SWGR 22 BUS 6A (EMERG. SUPPLY)	BUS 6A	480V SWGR 22 BUS 6A
13	REG-INV-1	REGULATOR INVERTER 1	PP22-07	REGULATOR CUBICLE INVERTER 1
14	SWGR 22	6900V SWGR 22 CONTROL UF/UV	PP22-09	6900V SWGR 22 CONTROL UF/UV
15	EXC-CTL	EXCITER CUBICLE	PP22-10	EXCITER CUBICLE SHORTING BKR CORNTROL
16	RTB-BYA	REACTOR TRIP SWGR RTB & BYA	PP22-11	REACTOR TRIP SWGR RTB & BYA
17	DP-22	DIST. PNL 22 (PC4)	DP22-01	345KV & 138KV PILOT WIRE RELAYS BACKUP & 6.9KV LOW FREQ RECP TRIP RELAY
			DP22-02	CONTROL FOR 345KV BKR #7
			DP22-03	UNIT AUX TRANSF RELAY & STATION AUX TRANSF BACKUP RELAYS
			DP22-04	SAMPLING SYSTEM SOLENOIDS
			DP22-05	GAS ANALYZER CAB & 9SGIS BRR. & 10SGIS BRR. RELAYS
			DP22-08	REACTOR TRIP RELAY TRAIN B (RACK F2)
			DP22-09	B.F.P. TURBINE 22 GOVERNOR STOP & RECIRC. VALVES & TRIP RESET CKT.

Node Names and Description

Print Date: 08/24/2005 03:25 pm

Battery: 22

Node ID	Node Name	Breaker	Circuit ID	Circuit Description
17	DP-22	DIST. PNL 22 (PC4)	DP22-11	PNL SB1 & SG1
			DP22-12	WASTE DISPOSAL SOLENOIDS & POST ACCIDENT VENT SYS
			DP22-13	AUXILLARY B.F. PUMP #23 RECIRCULATION VALVE SOV 1323 CT-6 CT-64 INDICATING LIGHTS
			DP22-14	TURBINE & REACTOR FIRST OUT ANNUNCIATORS
			DP22-15	DSL GEN TROUBLE RELAYS
			DP22-16	T/G LOAD LIMIT VAIVE & ANY RES OPS TRAIN ARMED
			DP22-17	GENERATOR RELAYS BACKUP
			DP22-18	MISC. RELAY RACK G2 & PROTECTION RACK F7
			DP22-19	T/G AUTO-STOP TRIP BACK-UP SOLENOID & ChII L.P. STEAM DUMP VALVES
			DP22-20	TURBINE REDUNDANT OVERSPEED TRIP (TRAIN B)
			PP22-12	125V D.C. DIST. PNL 22 (PC4)
18	SI-SOV	SAFETY INJECTION VALVE SOVs	DP22-06	S.I. VALVES
19	EDG-22-CTL	DSL GEN 22 CONTROL (EMERG. SUPPLY)	DG22-CONTROL	DIESEL GEN 22
20	INV-PA	10KVA INVERTER PA	PP22-14	10KVA STATIC INVERTER PA
21	INV-22	10KVA INVERTER 22	PP22-15	10KVA STATIC INVERTER 22

Attachment B
Path Voltage Drop Summary

Appendix revised
to account for
Transfer Switch loading

By: H Robinson Date:
Check: Date:

Path Voltage Drop Summary

Generation Date: 03/06/2008 11:01 am

Battery: 22 **Node:** 3 **Circuit:** BC-22 **Schematic:** IP2-S-000358

Device ID	Mfgr/Model	Path	Scenario	Time	Node Voltage	Path VD	Device Voltage	Required Voltage	Voltage Delta	Y/N
27/B22	ABB / CAT. NO. 439U6345	1	CMP22	W	110.08	0.00	110.08	88.50	21.58	Y

Path Voltage Drop Summary

Generation Date: 03/06/2008 11:01 am

Battery: 22 **Node:** 4 **Circuit:** DP22AA-01 **Schematic:** A208548

Device ID	Mfgr/Model	Path	Scenario	Time	Node Voltage	Path VD	Device Voltage	Required Voltage	Voltage Delta	Y/N
SOVE-5	ASCO / CAT. NO. NP831655E	1	CMP22	W	109.93	0.00	109.93	91.00	18.93	Y
SOVEW-2	ASCO / CAT. NO. 206-381-3FR	1	CMP22	W	109.93	0.00	109.93	91.00	18.93	Y

Path Voltage Drop Summary

Generation Date: 03/06/2008 11:01 am

Battery: 22 **Node:** 4 **Circuit:** DP22AA-02 **Schematic:** A208551

Device ID	Mfgr/Model	Path	Scenario	Time	Node Voltage	Path VD	Device Voltage	Required Voltage	Voltage Delta	Y/N
SOV3401	VALCOR / V526 Series	1	CMP22	W	109.93	0.00	109.93	91.00	18.93	Y
SOV3402	VALCOR / V526 Series	1	CMP22	W	109.93	0.00	109.93	91.00	18.93	Y
SOV3412	VALCOR / V526 Series	1	CMP22	W	109.93	0.00	109.93	91.00	18.93	Y
SOV3413	VALCOR / V526 Series	1	CMP22	W	109.93	0.00	109.93	91.00	18.93	Y

Path Voltage Drop Summary

Generation Date: 03/06/2008 11:01 am

Battery: 22 **Node:** 4 **Circuit:** DP22AA-03 **Schematic:** A208551

Device ID	Mfgr/Model	Path	Scenario	Time	Node Voltage	Path VD	Device Voltage	Required Voltage	Voltage Delta	Y/N
SOV3403	VALCOR / V526 Series	1	CMP22	W	109.93	0.00	109.93	91.00	18.93	Y
SOV3404	UNKNOWN / UNKNOWN	1	CMP22	W	109.93	0.00	109.93	103.00	6.93	Y
SOV3405	VALCOR / V526 Series	1	CMP22	W	109.93	0.00	109.93	91.00	18.93	Y
SOV3406	VALCOR / V526 Series	1	CMP22	W	109.93	0.00	109.93	91.00	18.93	Y

Path Voltage Drop Summary

Generation Date: 03/06/2008 11:01 am

Battery: 22 **Node:** 4 **Circuit:** DP22AA-04 **Schematic:** A208551

Device ID	Mfgr/Model	Path	Scenario	Time	Node Voltage	Path VD	Device Voltage	Required Voltage	Voltage Delta	Y/N
SOV3407	VALCOR / V526 Series	1	CMP22	W	109.93	0.00	109.93	91.00	18.93	Y
SOV3408	VALCOR / V526 Series	1	CMP22	W	109.93	0.00	109.93	91.00	18.93	Y
SOV3409	VALCOR / V526 Series	1	CMP22	W	109.93	0.00	109.93	91.00	18.93	Y
SOV3410	VALCOR / V526 Series	1	CMP22	W	109.93	0.00	109.93	91.00	18.93	Y
SOV3411	VALCOR / V526 Series	1	CMP22	W	109.93	0.00	109.93	91.00	18.93	Y

Path Voltage Drop Summary

Generation Date: 03/06/2008 11:01 am

Battery: 22 **Node:** 4 **Circuit:** DP22AA-05 **Schematic:** IP2-S-000092

Device ID	Mfgr/Model	Path	Scenario	Time	Node Voltage	Path VD	Device Voltage	Required Voltage	Voltage Delta	Y/N
SOV5019	VALCOR / V526 Series	1	CMP22	W	109.93	0.00	109.93	91.00	18.93	Y
SOV5023	VALCOR / V526 Series	1	CMP22	W	109.93	0.00	109.93	91.00	18.93	Y

Path Voltage Drop Summary

Generation Date: 03/06/2008 11:01 am

Battery: 22 **Node:** 4 **Circuit:** DP22AA-06 **Schematic:** B209543

Device ID	Mfgr/Model	Path	Scenario	Time	Node Voltage	Path VD	Device Voltage	Required Voltage	Voltage Delta	Y/N
SOV5046	ASCO / CAT. NO. NP8316A54E	1	CMP22	W	109.93	0.00	109.93	91.00	18.93	Y
SOV5050	ASCO / CAT. NO. NP8320A187E	1	CMP22	W	109.93	0.00	109.93	91.00	18.93	Y

Path Voltage Drop Summary

Generation Date: 03/06/2008 11:01 am

Battery: 22 **Node:** 4 **Circuit:** DP22AA-06 **Schematic:** B209545

Device ID	Mfgr/Model	Path	Scenario	Time	Node Voltage	Path VD	Device Voltage	Required Voltage	Voltage Delta	Y/N
SOV5047	ASCO / CAT. NO. NP8316A54E	1	CMP22	W	109.93	0.00	109.93	91.00	18.93	Y
SOV5051	ASCO / CAT. NO. NP8320A187E	1	CMP22	W	109.93	0.00	109.93	91.00	18.93	Y

Path Voltage Drop Summary

Generation Date: 03/06/2008 11:01 am

Battery: 22 **Node:** 4 **Circuit:** DP22AA-06 **Schematic:** B209546

Device ID	Mfgr/Model	Path	Scenario	Time	Node Voltage	Path VD	Device Voltage	Required Voltage	Voltage Delta	Y/N
SOV5048	ASCO / CAT. NO. NP8316A54E	1	CMP22	W	109.93	0.00	109.93	91.00	18.93	Y
SOV5052	ASCO / CAT. NO. NP8320A187E	1	CMP22	W	109.93	0.00	109.93	91.00	18.93	Y

Path Voltage Drop Summary

Generation Date: 03/06/2008 11:01 am

Battery: 22 **Node:** 4 **Circuit:** DP22AA-06 **Schematic:** B209547

Device ID	Mfgr/Model	Path	Scenario	Time	Node Voltage	Path VD	Device Voltage	Required Voltage	Voltage Delta	Y/N
SOV5049	ASCO / CAT. NO. NP8316A54E	1	CMP22	W	109.93	0.00	109.93	91.00	18.93	Y
SOV5053	ASCO / CAT. NO. NP8320A187E	1	CMP22	W	109.93	0.00	109.93	91.00	18.93	Y

Path Voltage Drop Summary

Generation Date: 03/06/2008 11:01 am

Battery: 22 **Node:** 4 **Circuit:** DP22AA-07 **Schematic:** 322462

Device ID	Mfgr/Model	Path	Scenario	Time	Node Voltage	Path VD	Device Voltage	Required Voltage	Voltage Delta	Y/N
33X/3518-EPFP3518	WHSE / NBFD	1	CMP22	W	109.93	0.00	109.93	101.00	8.93	Y

Path Voltage Drop Summary

Generation Date: 03/06/2008 11:01 am

Battery: 22 **Node:** 5 **Circuit:** DA5 XFR SW **Schematic:** 195B47

Device ID	Mfgr/Model	Path	Scenario	Time	Node Voltage	Path VD	Device Voltage	Required Voltage	Voltage Delta	Y/N
DA5	ASCO / TYPE BULLETIN 908, A	1	CMP22	W	108.41	0.00	108.41	1.00	107.41	Y

Path Voltage Drop Summary

Generation Date: 03/06/2008 11:01 am

Battery: 22 **Node:** 6 **Circuit:** PP22-02-PG5 **Schematic:** A251037

Device ID	Mfgr/Model	Path	Scenario	Time	Node Voltage	Path VD	Device Voltage	Required Voltage	Voltage Delta	Y/N
LP-213	UNKNOWN / EMERGENCY LTG PANEL	1	CMP22	W	107.87	0.00	107.87	1.00	106.87	Y

Path Voltage Drop Summary

Generation Date: 03/06/2008 11:01 am

Battery: 22 **Node:** 8 **Circuit:** DP22A-02 **Schematic:** 206799

Device ID	Mfgr/Model	Path	Scenario	Time	Node Voltage	Path VD	Device Voltage	Required Voltage	Voltage Delta	Y/N
OPXB-RCS OPS	WHSE / BFD	1	CMP22	W	109.59	0.00	109.59	97.00	12.59	Y
OPXB1-RCS OPS	WHSE / BFD	1	CMP22	W	109.59	0.00	109.59	97.00	12.59	Y
OPXB2-RCS OPS	WHSE / BFD	1	CMP22	W	109.59	0.00	109.59	97.00	12.59	Y

Path Voltage Drop Summary

Generation Date: 03/06/2008 11:01 am

Battery: 22 **Node:** 8 **Circuit:** DP22A-03 **Schematic:** B235113

Device ID	Mfgr/Model	Path	Scenario	Time	Node Voltage	Path VD	Device Voltage	Required Voltage	Voltage Delta	Y/N
SOV1311	ASCO / CAT. NO. NP831665E	1	CMP22	W	109.59	0.00	109.59	91.00	18.59	Y
TC1113S/X-V1311	UNKNOWN / UNKNOWN	1	CMP22	W	109.59	0.00	109.59	97.00	12.59	Y

Path Voltage Drop Summary

Generation Date: 03/06/2008 11:01 am

Battery: 22 **Node:** 9 **Circuit:** DP22A-01 **Schematic:** A206900

Device ID	Mfgr/Model	Path	Scenario	Time	Node Voltage	Path VD	Device Voltage	Required Voltage	Voltage Delta	Y/N
INVERTER.EGA6	TOPAZ / 1 KVA INVERTER	1	CMP22	W	108.17	0.00	108.17	101.00	7.17	Y

Path Voltage Drop Summary

Generation Date: 03/06/2008 11:01 am

Battery: 22 **Node:** 10 **Circuit:** BUS 2A **Schematic:** 9321-LL-3117 SH 03A

Device ID	Mfgr/Model	Path	Scenario	Time	Node Voltage	Path VD	Device Voltage	Required Voltage	Voltage Delta	Y/N
27-S1/2A-2A	ABB / TYPE 27N, SERIES 411	1	CMP22	W	106.36	0.00	106.36	101.00	5.36	Y
27-S2/2A-2A	ABB / TYPE 27N, SERIES 411	1	CMP22	W	106.36	0.00	106.36	101.00	5.36	Y
47X-SG21-U26A	WHSE / SG	1	CMP22	W	106.36	0.00	106.36	101.00	5.36	Y
62-1/2A-2A	AGASTAT / UNKNOWN	1	CMP22	W	106.36	0.00	106.36	101.00	5.36	Y
62/2A-2A	AGASTAT / UNKNOWN	1	CMP22	W	106.36	0.00	106.36	101.00	5.36	Y

Path Voltage Drop Summary

Generation Date: 03/06/2008 11:01 am

Battery: 22 **Node:** 10 **Circuit:** BUS 2A **Schematic:** 9321-LL-3117 SH 06

Device ID	Mfgr/Model	Path	Scenario	Time	Node Voltage	Path VD	Device Voltage	Required Voltage	Voltage Delta	Y/N
26BX/O-2A	UNKNOWN / UNKNOWN	1	CMP22	W	106.36	0.00	106.36	97.00	9.36	Y
26BX/R-2A	UNKNOWN / UNKNOWN	1	CMP22	W	106.36	0.00	106.36	97.00	9.36	Y
52CC-2A	WHSE / DB-75-CC	1	CMP22	33	106.36	0.00	106.36	91.00	15.36	Y
52TC-2A	WHSE / DB-75-TC	1	CMP22	09	113.63	0.22	113.41	71.00	42.41	Y
52TC-2A	WHSE / DB-75-TC	1	CMP22	10	108.22	0.21	108.01	71.00	37.01	Y
52TC-2A	WHSE / DB-75-TC	2	CMP22	01	109.19	1.60	107.59	71.00	36.59	Y
52X-2A	WHSE / X- CLOSING RELAY (0.	1	CMP22	32	109.69	0.00	109.69	91.00	18.69	Y
52X-2A	WHSE / X- CLOSING RELAY (0.	1	CMP22	33	106.36	0.00	106.36	91.00	15.36	Y
74/2A-2A	WHSE / BFD	1	CMP22	W	106.36	0.00	106.36	97.00	9.36	Y

Path Voltage Drop Summary

Generation Date: 03/06/2008 11:01 am

Battery: 22 **Node:** 10 **Circuit:** BUS 2A **Schematic:** 9321-LL-3117 SH 08

Device ID	Mfgr/Model	Path	Scenario	Time	Node Voltage	Path VD	Device Voltage	Required Voltage	Voltage Delta	Y/N
21BX/O-EG2A	UNKNOWN / UNKNOWN	1	CMP22	W	106.36	0.00	106.36	97.00	9.36	Y
21BX/R-EG2A	UNKNOWN / UNKNOWN	1	CMP22	W	106.36	0.00	106.36	97.00	9.36	Y
21BX1/O-EG2A	UNKNOWN / UNKNOWN	1	CMP22	W	106.36	0.00	106.36	97.00	9.36	Y
21BX1/R-EG2A	UNKNOWN / UNKNOWN	1	CMP22	W	106.36	0.00	106.36	97.00	9.36	Y
52CC-EG2A	WHSE / DB-75-CC	1	CMP22	10	108.22	0.00	108.22	91.00	17.22	Y
52CC-EG2A	WHSE / DB-75-CC	1	CMP22	33	106.36	0.00	106.36	91.00	15.36	Y
52TC-EG2A	WHSE / DB-75-TC	1	CMP22	W	106.36	0.00	106.36	71.00	35.36	Y
52X-EG2A	WHSE / X- CLOSING RELAY (0.	1	CMP22	09	113.63	0.00	113.63	91.00	22.63	Y
52X-EG2A	WHSE / X- CLOSING RELAY (0.	1	CMP22	10	108.22	0.00	108.22	91.00	17.22	Y
52X-EG2A	WHSE / X- CLOSING RELAY (0.	1	CMP22	32	109.69	0.00	109.69	91.00	18.69	Y
52X-EG2A	WHSE / X- CLOSING RELAY (0.	1	CMP22	33	106.36	0.00	106.36	91.00	15.36	Y
74/EG2A-EG2A	WHSE / BFD	1	CMP22	W	106.36	0.00	106.36	97.00	9.36	Y

Path Voltage Drop Summary

Generation Date: 03/06/2008 11:01 am

Battery: 22 **Node:** 10 **Circuit:** BUS 2A **Schematic:** 9321-LL-3117 SH 11

Device ID	Mfgr/Model	Path	Scenario	Time	Node Voltage	Path VD	Device Voltage	Required Voltage	Voltage Delta	Y/N
52CC-LT1N	WHSE / DB-50-CC	1	CMP22	W	106.36	0.00	106.36	91.00	15.36	Y
52CC-MCC1	WHSE / DB-50-CC	1	CMP22	W	106.36	0.00	106.36	91.00	15.36	Y
52CC-MCC10	WHSE / DB-50-CC	1	CMP22	W	106.36	0.00	106.36	91.00	15.36	Y
52CC-MCC3	WHSE / DB-50-CC	1	CMP22	W	106.36	0.00	106.36	91.00	15.36	Y
52CC-MCC4A	WHSE / DB-50-CC	1	CMP22	33	106.36	0.00	106.36	91.00	15.36	Y
52CC-MCC8A	WHSE / DB-50-CC	1	CMP22	W	106.36	0.00	106.36	91.00	15.36	Y
52TC-LT1N	WHSE / DB-50-TC	1	CMP22	01	109.19	0.72	108.46	71.00	37.46	Y
52TC-MCC1	WHSE / DB-50-TC	1	CMP22	01	109.19	0.74	108.45	71.00	37.45	Y
52TC-MCC10	WHSE / DB-50-TC	1	CMP22	01	109.19	0.72	108.46	71.00	37.46	Y
52TC-MCC3	WHSE / DB-50-TC	1	CMP22	01	109.19	0.72	108.46	71.00	37.46	Y
52TC-MCC4A	WHSE / DB-50-TC	1	CMP22	01	109.19	0.80	108.38	71.00	37.38	Y
52TC-MCC8A	WHSE / DB-50-TC	1	CMP22	01	109.19	1.00	108.18	71.00	37.18	Y
52X-LT1N	WHSE / X- CLOSING RELAY (0.	1	CMP22	W	106.36	0.00	106.36	91.00	15.36	Y
52X-MCC1	WHSE / X- CLOSING RELAY (0.	1	CMP22	W	106.36	0.00	106.36	91.00	15.36	Y
52X-MCC10	WHSE / X- CLOSING RELAY (0.	1	CMP22	W	106.36	0.00	106.36	91.00	15.36	Y
52X-MCC3	WHSE / X- CLOSING RELAY (0.	1	CMP22	W	106.36	0.00	106.36	91.00	15.36	Y
52X-MCC4A	WHSE / X- CLOSING RELAY (0.	1	CMP22	32	109.69	0.00	109.69	91.00	18.69	Y
52X-MCC4A	WHSE / X- CLOSING RELAY (0.	1	CMP22	33	106.36	0.00	106.36	91.00	15.36	Y
52X-MCC8A	WHSE / X- CLOSING RELAY (0.	1	CMP22	W	106.36	0.00	106.36	91.00	15.36	Y

Path Voltage Drop Summary

Generation Date: 03/06/2008 11:01 am

Battery: 22 **Node:** 10 **Circuit:** BUS 2A **Schematic:** A208088

Device ID	Mfgr/Model	Path	Scenario	Time	Node Voltage	Path VD	Device Voltage	Required Voltage	Voltage Delta	Y/N
EDD2	ASCO / AUTO TRANSFER P/N 30	1	CMP22	W	106.36	0.00	106.36	101.00	5.36	Y

Path Voltage Drop Summary

Generation Date: 03/06/2008 11:01 am

Battery: 22 **Node:** 10 **Circuit:** BUS 2A **Schematic:** B225135

Device ID	Mfgr/Model	Path	Scenario	Time	Node Voltage	Path VD	Device Voltage	Required Voltage	Voltage Delta	Y/N
2/SI2A-SI2A	UNKNOWN / UNKNOWN	1	CMP22	W	106.36	0.00	106.36	97.00	9.36	Y
52CC-SI2A	WHSE / DB-50-CC	1	CMP22	06	110.16	0.00	110.16	91.00	19.16	Y
52CC-SI2A	WHSE / DB-50-CC	1	CMP22	13	110.19	0.00	110.19	91.00	19.19	Y
52TC-SI2A	WHSE / DB-50-TC	1	CMP22	01	109.19	2.21	106.97	71.00	35.97	Y
52TC-SI2A	WHSE / DB-50-TC	1	CMP22	25	113.38	2.30	111.08	71.00	40.08	Y
52X-SI2A	WHSE / X- CLOSING RELAY (0.	1	CMP22	05	113.58	0.00	113.58	91.00	22.58	Y
52X-SI2A	WHSE / X- CLOSING RELAY (0.	1	CMP22	06	110.16	0.00	110.16	91.00	19.16	Y
52X-SI2A	WHSE / X- CLOSING RELAY (0.	1	CMP22	12	113.63	0.00	113.63	91.00	22.63	Y
52X-SI2A	WHSE / X- CLOSING RELAY (0.	1	CMP22	13	110.19	0.00	110.19	91.00	19.19	Y
74-SI2A	WHSE / BFD	1	CMP22	W	106.36	0.00	106.36	97.00	9.36	Y

Path Voltage Drop Summary

Generation Date: 03/06/2008 11:01 am

Battery: 22 **Node:** 10 **Circuit:** BUS 2A **Schematic:** B225141

Device ID	Mfgr/Model	Path	Scenario	Time	Node Voltage	Path VD	Device Voltage	Required Voltage	Voltage Delta	Y/N
2/SW5B-SW5B	UNKNOWN / UNKNOWN	1	CMP22	W	106.36	0.00	106.36	97.00	9.36	Y
52CC-SW5B	WHSE / DB-50-CC	1	CMP22	16	110.19	0.00	110.19	91.00	19.19	Y
52TC-SW5B	WHSE / DB-50-TC	1	CMP22	01	109.19	2.26	106.93	71.00	35.93	Y
52X-SW5B	WHSE / X- CLOSING RELAY (0.	1	CMP22	15	113.63	0.00	113.63	91.00	22.63	Y
52X-SW5B	WHSE / X- CLOSING RELAY (0.	1	CMP22	16	110.19	0.00	110.19	91.00	19.19	Y
74/SW5B	UNKNOWN / UNKNOWN	1	CMP22	W	106.36	0.00	106.36	97.00	9.36	Y
M-SW5B	UNKNOWN / TIME METER	1	CMP22	W	106.36	0.00	106.36	101.00	5.36	Y
S25A-SW5B	UNKNOWN / UNKNOWN	1	CMP22	W	106.36	0.00	106.36	97.00	9.36	Y

Path Voltage Drop Summary

Generation Date: 03/06/2008 11:01 am

Battery: 22 **Node:** 10 **Circuit:** BUS 2A **Schematic:** B225145

Device ID	Mfgr/Model	Path	Scenario	Time	Node Voltage	Path VD	Device Voltage	Required Voltage	Voltage Delta	Y/N
52CC-PBU2	WHSE / DB-50-CC	1	CMP22	W	106.36	0.00	106.36	91.00	15.36	Y
52TC-PBU2	WHSE / DB-50-TC	1	CMP22	01	109.19	1.03	108.16	71.00	37.16	Y
52X-PBU2	WHSE / X- CLOSING RELAY (0.	1	CMP22	W	106.36	0.00	106.36	91.00	15.36	Y
74/PBU2-PBU2	WHSE / BFD	1	CMP22	W	106.36	0.00	106.36	97.00	9.36	Y
86-PBU2	WHSE / BFD	1	CMP22	W	106.36	0.12	106.24	97.00	9.24	Y

Path Voltage Drop Summary

Generation Date: 03/06/2008 11:01 am

Battery: 22 **Node:** 10 **Circuit:** BUS 2A **Schematic:** B225147

Device ID	Mfgr/Model	Path	Scenario	Time	Node Voltage	Path VD	Device Voltage	Required Voltage	Voltage Delta	Y/N
2/SW2A-SW2A	UNKNOWN / UNKNOWN	1	CMP22	W	106.36	0.00	106.36	97.00	9.36	Y
52CC-SW2A	WHSE / DB-50-CC	1	CMP22	16	110.19	0.00	110.19	91.00	19.19	Y
52TC-SW2A	WHSE / DB-50-TC	1	CMP22	01	109.19	2.18	107.00	71.00	36.00	Y
52X-SW2A	WHSE / X- CLOSING RELAY (0.	1	CMP22	15	113.63	0.00	113.63	91.00	22.63	Y
52X-SW2A	WHSE / X- CLOSING RELAY (0.	1	CMP22	16	110.19	0.00	110.19	91.00	19.19	Y
74/SW2A	UNKNOWN / UNKNOWN	1	CMP22	W	106.36	0.00	106.36	97.00	9.36	Y
M-SW2A	UNKNOWN / TIME METER	1	CMP22	W	106.36	0.00	106.36	101.00	5.36	Y
S24A-SW2A	UNKNOWN / UNKNOWN	1	CMP22	W	106.36	0.00	106.36	97.00	9.36	Y

Path Voltage Drop Summary

Generation Date: 03/06/2008 11:01 am

Battery: 22 **Node:** 10 **Circuit:** BUS 2A **Schematic:** B225150

Device ID	Mfgr/Model	Path	Scenario	Time	Node Voltage	Path VD	Device Voltage	Required Voltage	Voltage Delta	Y/N
52CC-CC2	WHSE / DB-50-CC	1	CMP22	27	110.28	0.00	110.28	91.00	19.28	Y
52TC-CC2	WHSE / DB-50-TC	1	CMP22	01	109.19	0.00	109.19	71.00	38.19	Y
52X-CC2	WHSE / X- CLOSING RELAY (0.	1	CMP22	26	113.73	0.00	113.73	91.00	22.73	Y
52X-CC2	WHSE / X- CLOSING RELAY (0.	1	CMP22	27	110.28	0.00	110.28	91.00	19.28	Y
74-CC2	UNKNOWN / UNKNOWN	1	CMP22	W	106.36	0.00	106.36	97.00	9.36	Y
86-CC2	WHSE / 86 LOCKOUT RELAY (0.	1	CMP22	W	106.36	0.00	106.36	71.00	35.36	Y
CC2/2TD-CC2	UNKNOWN / UNKNOWN	1	CMP22	W	106.36	0.00	106.36	97.00	9.36	Y

Path Voltage Drop Summary

Generation Date: 03/06/2008 11:01 am

Battery: 22 **Node:** 10 **Circuit:** BUS 2A **Schematic:** B225152

Device ID	Mfgr/Model	Path	Scenario	Time	Node Voltage	Path VD	Device Voltage	Required Voltage	Voltage Delta	Y/N
2-CRF3-CRF 23	UNKNOWN / UNKNOWN	1	CMP22	W	106.36	0.00	106.36	97.00	9.36	Y
52CC-CRF 23	WHSE / DB-50-CC	1	CMP22	22	110.19	0.00	110.19	91.00	19.19	Y
52TC-CRF 23	WHSE / DB-50-TC	1	CMP22	01	109.19	1.45	107.73	71.00	36.73	Y
52X-CRF 23	WHSE / X- CLOSING RELAY (0.	1	CMP22	21	113.63	0.00	113.63	91.00	22.63	Y
52X-CRF 23	WHSE / X- CLOSING RELAY (0.	1	CMP22	22	110.19	0.00	110.19	91.00	19.19	Y
74-CRF 23	WHSE / BFD	1	CMP22	W	106.36	0.00	106.36	97.00	9.36	Y

Path Voltage Drop Summary

Generation Date: 03/06/2008 11:01 am

Battery: 22 **Node:** 10 **Circuit:** BUS 2A **Schematic:** B253867

Device ID	Mfgr/Model	Path	Scenario	Time	Node Voltage	Path VD	Device Voltage	Required Voltage	Voltage Delta	Y/N
52CC-MG1	WHSE / DB-50-CC	1	CMP22	W	106.36	0.00	106.36	91.00	15.36	Y
52TC-MG1	WHSE / DB-50-TC	1	CMP22	01	109.19	2.34	106.85	71.00	35.85	Y
52X-MG1	WHSE / X- CLOSING RELAY (0.	1	CMP22	W	106.36	0.00	106.36	91.00	15.36	Y
74/1-MG1	WHSE / BFD	1	CMP22	W	106.36	0.00	106.36	97.00	9.36	Y

Path Voltage Drop Summary

Generation Date: 03/06/2008 11:01 am

Battery: 22 **Node:** 11 **Circuit:** DG23-CONTR **Schematic:** A208540

Device ID	Mfgr/Model	Path	Scenario	Time	Node Voltage	Path VD	Device Voltage	Required Voltage	Voltage Delta	Y/N
86-EDG 23	UNKNOWN / UNKNOWN	1	CMP22	W	105.72	0.00	105.72	97.00	8.72	Y
86X-EDG 23	UNKNOWN / UNKNOWN	1	CMP22	W	105.72	0.00	105.72	97.00	8.72	Y
CVX-EDG 23	WHSE / MG-6	1	CMP22	W	105.72	0.00	105.72	101.00	4.72	Y
VBR-EDG 23	WHSE / CV	1	CMP22	W	105.72	0.00	105.72	101.00	4.72	Y

Path Voltage Drop Summary

Generation Date: 03/06/2008 11:01 am

Battery: 22 **Node:** 11 **Circuit:** DG23-CONTR **Schematic:** IP2-S-000286

Device ID	Mfgr/Model	Path	Scenario	Time	Node Voltage	Path VD	Device Voltage	Required Voltage	Voltage Delta	Y/N
32X-EDG 23	UNKNOWN / UNKNOWN	1	CMP22	W	105.72	0.00	105.72	97.00	8.72	Y
51VX-EDG 23	UNKNOWN / UNKNOWN	1	CMP22	W	105.72	0.00	105.72	97.00	8.72	Y
AGA/1-EDG 23	AGASTAT / UNKNOWN	1	CMP22	W	105.72	0.00	105.72	101.00	4.72	Y
AGA/2-EDG 23	AGASTAT / UNKNOWN	1	CMP22	W	105.72	0.00	105.72	101.00	4.72	Y
ANNUNHORN-EDG 23	PANALARM / HORN FOR ANNUNCIATOR	1	CMP22	W	105.72	0.00	105.72	101.00	4.72	Y
ASR-EDG 23	UNKNOWN / UNKNOWN	1	CMP22	W	105.72	0.00	105.72	97.00	8.72	Y
ASV/1-EDG 23	ROSS / SERIES 27	1	CMP22	W	105.72	0.04	105.68	75.00	30.68	Y
ASV/2-EDG 23	ROSS / SERIES 27	1	CMP22	W	105.72	0.04	105.68	75.00	30.68	Y
CR/1-EDG 23	UNKNOWN / UNKNOWN W/ DIODE IN	1	CMP22	W	105.72	0.00	105.72	97.00	8.72	Y
CR/2-EDG 23	UNKNOWN / UNKNOWN W/ DIODE IN	1	CMP22	W	105.72	0.00	105.72	97.00	8.72	Y
EDD7	ASCO / AUTO TRANSFER P/N 30	1	CMP22	W	105.72	0.00	105.72	101.00	4.72	Y
ESR/1-EDG 23	UNKNOWN / UNKNOWN W/ DIODE IN	1	CMP22	W	105.72	0.00	105.72	97.00	8.72	Y
ESR/2-EDG 23	UNKNOWN / UNKNOWN W/ DIODE IN	1	CMP22	W	105.72	0.00	105.72	97.00	8.72	Y
ESRX/1-EDG 23	WHSE / NBFD	1	CMP22	W	105.72	0.10	105.62	101.00	4.62	Y
ESRX/1-EDG 23	WHSE / NBFD	2	CMP22	W	105.72	0.09	105.64	101.00	4.64	Y
ESRX/2-EDG 23	WHSE / NBFD	1	CMP22	W	105.72	0.10	105.62	101.00	4.62	Y
ESRX/2-EDG 23	WHSE / NBFD	2	CMP22	W	105.72	0.09	105.64	101.00	4.64	Y
ESS-EDG 23	UNKNOWN / 1 PUSHBUTTON LT	1	CMP22	W	105.72	0.00	105.72	101.00	4.72	Y
FLD FLASH-EDG 23	ALCO / FIELD FLASH	1	CMP22	W	105.72	0.00	105.72	1.00	104.72	Y
FODPR-EDG 23	UNKNOWN / UNKNOWN W/ DIODE IN	1	CMP22	W	105.72	0.00	105.72	97.00	8.72	Y
FODSR-EDG 23	UNKNOWN / UNKNOWN W/ DIODE IN	1	CMP22	W	105.72	0.00	105.72	97.00	8.72	Y
FR-EDG 23	UNKNOWN / UNKNOWN	1	CMP22	W	105.72	0.00	105.72	97.00	8.72	Y
H/HWTR-EDG 23	UNKNOWN / UNKNOWN W/ DIODE IN	1	CMP22	W	105.72	0.00	105.72	97.00	8.72	Y
HL/LOTR-EDG 23	UNKNOWN / UNKNOWN W/ DIODE IN	1	CMP22	W	105.72	0.00	105.72	97.00	8.72	Y
HLOTR/1-EDG 23	UNKNOWN / UNKNOWN W/ DIODE IN	1	CMP22	W	105.72	0.00	105.72	97.00	8.72	Y
HR-EDG 23	UNKNOWN / UNKNOWN	1	CMP22	W	105.72	0.00	105.72	97.00	8.72	Y
HWTR-EDG 23	UNKNOWN / UNKNOWN W/ DIODE IN	1	CMP22	W	105.72	0.00	105.72	97.00	8.72	Y
HWTR/1-EDG 23	UNKNOWN / UNKNOWN W/ DIODE IN	1	CMP22	W	105.72	0.00	105.72	97.00	8.72	Y
K1X-EDG 23	UNKNOWN / UNKNOWN W/ DIODE IN	1	CMP22	W	105.72	0.00	105.72	97.00	8.72	Y
LAPR-EDG 23	UNKNOWN / UNKNOWN W/ DIODE IN	1	CMP22	W	105.72	0.00	105.72	97.00	8.72	Y
LFLR-EDG 23	UNKNOWN / UNKNOWN W/ DIODE IN	1	CMP22	W	105.72	0.00	105.72	97.00	8.72	Y
LODFR-EDG 23	UNKNOWN / UNKNOWN W/ DIODE IN	1	CMP22	W	105.72	0.00	105.72	97.00	8.72	Y
LODSR-EDG 23	UNKNOWN / UNKNOWN W/ DIODE IN	1	CMP22	W	105.72	0.00	105.72	97.00	8.72	Y
NST-EDG 23	UNKNOWN / UNKNOWN TIME DELAY	1	CMP22	W	105.72	0.00	105.72	101.00	4.72	Y
OCR-EDG 23	UNKNOWN / UNKNOWN	1	CMP22	W	105.72	0.00	105.72	97.00	8.72	Y
OCT/1-EDG 23	AGASTAT / AGA 2412	1	CMP22	W	105.72	0.00	105.72	97.00	8.72	Y
OCT/2-EDG 23	AMERACE / CAT. NO. 7012PD	1	CMP22	W	105.72	0.00	105.72	101.00	4.72	Y
OPR-EDG 23	UNKNOWN / UNKNOWN W/ DIODE IN	1	CMP22	W	105.72	0.00	105.72	97.00	8.72	Y
OPT1-EDG 23	UNKNOWN / UNKNOWN TIME DELAY	1	CMP22	W	105.72	0.00	105.72	101.00	4.72	Y
OPT2-EDG 23	UNKNOWN / UNKNOWN TIME DELAY	1	CMP22	W	105.72	0.00	105.72	101.00	4.72	Y
OSR-EDG 23	UNKNOWN / UNKNOWN W/ DIODE IN	1	CMP22	W	105.72	0.00	105.72	97.00	8.72	Y
PDT-EDG 23	UNKNOWN / UNKNOWN TIME DELAY	1	CMP22	W	105.72	0.00	105.72	101.00	4.72	Y
R1-EDG 23	WHSE / BFD	1	CMP22	W	105.72	0.00	105.72	97.00	8.72	Y
R2-EDG 23	WHSE / BFD	1	CMP22	W	105.72	0.00	105.72	97.00	8.72	Y
RR-EDG 23	UNKNOWN / UNKNOWN W/ DIODE IN	1	CMP22	W	105.72	0.00	105.72	97.00	8.72	Y

Path Voltage Drop Summary

Generation Date: 03/06/2008 11:01 am

Battery: 22 **Node:** 11 **Circuit:** DG23-CONTR **Schematic:** IP2-S-000286

Device ID	Mfgr/Model	Path	Scenario	Time	Node Voltage	Path VD	Device Voltage	Required Voltage	Voltage Delta	Y/N
SDR-EDG 23	UNKNOWN / UNKNOWN TIME DELAY	1	CMP22	W	105.72	0.00	105.72	101.00	4.72	Y
UPR-EDG 23	UNKNOWN / UNKNOWN	1	CMP22	W	105.72	0.00	105.72	97.00	8.72	Y

Path Voltage Drop Summary

Generation Date: 03/06/2008 11:01 am

Battery: 22 **Node:** 11 **Circuit:** DG23-CONTR **Schematic:** IP2-S-000366

Device ID	Mfgr/Model	Path	Scenario	Time	Node Voltage	Path VD	Device Voltage	Required Voltage	Voltage Delta	Y/N
JWPS(3,4)X-EDG 23	WHSE / NBFD	1	CMP22	W	105.72	0.00	105.72	101.00	4.72	Y
K1-EDG 23	WHSE / TYPE MLLO-2H	1	CMP22	W	105.72	0.00	105.72	101.00	4.72	Y
K2-EDG 23	WHSE / TYPE MLLO-2H	1	CMP22	W	105.72	0.00	105.72	101.00	4.72	Y
K4-EDG 23	UNKNOWN / UNKNOWN W/ DIODE IN	1	CMP22	W	105.72	0.00	105.72	97.00	8.72	Y

Path Voltage Drop Summary

Generation Date: 03/06/2008 11:01 am

Battery: 22 **Node:** 12 **Circuit:** BUS 6A **Schematic:** 300925

Device ID	Mfgr/Model	Path	Scenario	Time	Node Voltage	Path VD	Device Voltage	Required Voltage	Voltage Delta	Y/N
2/SI3-SI3	UNKNOWN / UNKNOWN	1	CMP22	W	106.71	0.00	106.71	97.00	9.71	Y
52CC-SI3	WHSE / DB-50-CC	1	CMP22	W	106.71	0.00	106.71	91.00	15.71	Y
52TC-SI3	WHSE / DB-50-TC	1	CMP22	W	106.71	1.67	105.04	71.00	34.04	Y
52X-SI3	WHSE / DB-50-TC	1	CMP22	W	106.71	0.00	106.71	71.00	35.71	Y
74-SI3	WHSE / BFD	1	CMP22	W	106.71	0.00	106.71	97.00	9.71	Y

Path Voltage Drop Summary

Generation Date: 03/06/2008 11:01 am

Battery: 22 **Node:** 12 **Circuit:** BUS 6A **Schematic:** 9321-LL-3118 SH 03B

Device ID	Mfgr/Model	Path	Scenario	Time	Node Voltage	Path VD	Device Voltage	Required Voltage	Voltage Delta	Y/N
27-S1/6A-6A	ABB / TYPE 27N, SERIES 411	1	CMP22	W	106.71	0.00	106.71	101.00	5.71	Y
27-S2/6A-6A	ABB / TYPE 27N, SERIES 411	1	CMP22	W	106.71	0.00	106.71	101.00	5.71	Y
47X-SG22-U13A	WHSE / SG	1	CMP22	W	106.71	0.00	106.71	101.00	5.71	Y
62-1/6A-6A	AGASTAT / UNKNOWN	1	CMP22	W	106.71	0.00	106.71	101.00	5.71	Y
62/6A-6A	AGASTAT / UNKNOWN	1	CMP22	W	106.71	0.00	106.71	101.00	5.71	Y

Path Voltage Drop Summary

Generation Date: 03/06/2008 11:01 am

Battery: 22 **Node:** 12 **Circuit:** BUS 6A **Schematic:** 9321-LL-3118 SH 04

Device ID	Mfgr/Model	Path	Scenario	Time	Node Voltage	Path VD	Device Voltage	Required Voltage	Voltage Delta	Y/N
13BX/O-6A	UNKNOWN / UNKNOWN	1	CMP22	W	106.71	0.00	106.71	97.00	9.71	Y
13BX/R-6A	UNKNOWN / UNKNOWN	1	CMP22	W	106.71	0.00	106.71	97.00	9.71	Y
52CC-6A	WHSE / DB-75-CC	1	CMP22	W	106.71	0.00	106.71	91.00	15.71	Y
52TC-6A	WHSE / DB-75-TC	1	CMP22	W	106.71	0.00	106.71	71.00	35.71	Y
52X-6A	WHSE / X- CLOSING RELAY (0.	1	CMP22	W	106.71	0.00	106.71	91.00	15.71	Y
74/6A-6A	WHSE / BFD	1	CMP22	W	106.71	0.00	106.71	97.00	9.71	Y

Path Voltage Drop Summary

Generation Date: 03/06/2008 11:01 am

Battery: 22 **Node:** 12 **Circuit:** BUS 6A **Schematic:** 9321-LL-3118 SH 05

Device ID	Mfgr/Model	Path	Scenario	Time	Node Voltage	Path VD	Device Voltage	Required Voltage	Voltage Delta	Y/N
52CC-3AT6A	WHSE / DB-75-CC	1	CMP22	W	106.71	0.00	106.71	91.00	15.71	Y
52LO-3AT6A	UNKNOWN / UNKNOWN	1	CMP22	W	106.71	0.00	106.71	97.00	9.71	Y
52TC-3AT6A	WHSE / DB-75-TC	1	CMP22	W	106.71	0.00	106.71	71.00	35.71	Y
52X-3AT6A	WHSE / X- CLOSING RELAY (0.	1	CMP22	W	106.71	0.00	106.71	91.00	15.71	Y
74/3AT6A-3AT6A	WHSE / BFD	1	CMP22	W	106.71	0.00	106.71	97.00	9.71	Y
7BX/O-3AT6A	UNKNOWN / UNKNOWN	1	CMP22	W	106.71	0.00	106.71	97.00	9.71	Y
7BX/R-3AT6A	UNKNOWN / UNKNOWN	1	CMP22	W	106.71	0.00	106.71	97.00	9.71	Y
7BX1/O-3AT6A	UNKNOWN / UNKNOWN	1	CMP22	W	106.71	0.00	106.71	97.00	9.71	Y
7BX1/R-3AT6A	UNKNOWN / UNKNOWN	1	CMP22	W	106.71	0.00	106.71	97.00	9.71	Y

Path Voltage Drop Summary

Generation Date: 03/06/2008 11:01 am

Battery: 22 **Node:** 12 **Circuit:** BUS 6A **Schematic:** 9321-LL-3118 SH 07

Device ID	Mfgr/Model	Path	Scenario	Time	Node Voltage	Path VD	Device Voltage	Required Voltage	Voltage Delta	Y/N
13CX/O-EG3	UNKNOWN / UNKNOWN	1	CMP22	W	106.71	0.00	106.71	97.00	9.71	Y
13CX/R-EG3	UNKNOWN / UNKNOWN	1	CMP22	W	106.71	0.00	106.71	97.00	9.71	Y
13CX1/O-EG3	UNKNOWN / UNKNOWN	1	CMP22	W	106.71	0.00	106.71	97.00	9.71	Y
13CX1/R-EG3	UNKNOWN / UNKNOWN	1	CMP22	W	106.71	0.00	106.71	97.00	9.71	Y
52CC-EG3	WHSE / DB-75-CC	1	CMP22	W	106.71	0.00	106.71	91.00	15.71	Y
52TC-EG3	WHSE / DB-75-TC	1	CMP22	W	106.71	0.00	106.71	71.00	35.71	Y
52X-EG3	WHSE / X- CLOSING RELAY (0.	1	CMP22	W	106.71	0.00	106.71	91.00	15.71	Y
74/EG3-EG3	WHSE / BFD	1	CMP22	W	106.71	0.00	106.71	97.00	9.71	Y

Path Voltage Drop Summary

Generation Date: 03/06/2008 11:01 am

Battery: 22 **Node:** 12 **Circuit:** BUS 6A **Schematic:** 9321-LL-3118 SH 09

Device ID	Mfgr/Model	Path	Scenario	Time	Node Voltage	Path VD	Device Voltage	Required Voltage	Voltage Delta	Y/N
52CC-MCC6B	WHSE / DB-50-CC	1	CMP22	W	106.71	0.00	106.71	91.00	15.71	Y
52TC-MCC6B	WHSE / DB-50-TC	1	CMP22	W	106.71	0.00	106.71	71.00	35.71	Y
52X-MCC6B	WHSE / X- CLOSING RELAY (0.	1	CMP22	W	106.71	0.00	106.71	91.00	15.71	Y

Path Voltage Drop Summary

Generation Date: 03/06/2008 11:01 am

Battery: 22 **Node:** 12 **Circuit:** BUS 6A **Schematic:** 9321-LL-3118 SH 10

Device ID	Mfgr/Model	Path	Scenario	Time	Node Voltage	Path VD	Device Voltage	Required Voltage	Voltage Delta	Y/N
52CC-LTIE	WHSE / DB-50-CC	1	CMP22	W	106.71	0.00	106.71	91.00	15.71	Y
52CC-MCC7A	WHSE / DB-50-CC	1	CMP22	W	106.71	0.00	106.71	91.00	15.71	Y
52TC-LTIE	WHSE / DB-50-TC	1	CMP22	W	106.71	0.00	106.71	71.00	35.71	Y
52TC-MCC7A	WHSE / DB-50-TC	1	CMP22	W	106.71	0.00	106.71	71.00	35.71	Y
52X-LTIE	WHSE / X- CLOSING RELAY (0.	1	CMP22	W	106.71	0.00	106.71	91.00	15.71	Y
52X-MCC7A	WHSE / X- CLOSING RELAY (0.	1	CMP22	W	106.71	0.00	106.71	91.00	15.71	Y

Path Voltage Drop Summary

Generation Date: 03/06/2008 11:01 am

Battery: 22 **Node:** 12 **Circuit:** BUS 6A **Schematic:** 9321-LL-3118 SH 16

Device ID	Mfgr/Model	Path	Scenario	Time	Node Voltage	Path VD	Device Voltage	Required Voltage	Voltage Delta	Y/N
2-1/AF3-AF3	UNKNOWN / UNKNOWN	1	CMP22	W	106.71	0.00	106.71	97.00	9.71	Y
2-2/AF3-AF3	A-B / 700-RTC	1	CMP22	W	106.71	0.00	106.71	97.00	9.71	Y
52CC-AF3	WHSE / DB-50-CC	1	CMP22	W	106.71	0.00	106.71	91.00	15.71	Y
52TC-AF3	WHSE / DB-50-TC	1	CMP22	W	106.71	0.00	106.71	71.00	35.71	Y
52X-AF3	WHSE / X- CLOSING RELAY (0.	1	CMP22	W	106.71	0.00	106.71	91.00	15.71	Y
74/AF3-AF3	WHSE / BFD	1	CMP22	W	106.71	0.00	106.71	97.00	9.71	Y
BFD/3-AF3	UNKNOWN / UNKNOWN	1	CMP22	W	106.71	0.00	106.71	97.00	9.71	Y

Path Voltage Drop Summary

Generation Date: 03/06/2008 11:01 am

Battery: 22 **Node:** 12 **Circuit:** BUS 6A **Schematic:** 9321-LL-3118 SH 18

Device ID	Mfgr/Model	Path	Scenario	Time	Node Voltage	Path VD	Device Voltage	Required Voltage	Voltage Delta	Y/N
52CC-TAO	WHSE / DB-50-CC	1	CMP22	W	106.71	0.00	106.71	91.00	15.71	Y
52TC-TAO	WHSE / DB-50-TC	1	CMP22	W	106.71	0.00	106.71	71.00	35.71	Y
52X-TAO	WHSE / X- CLOSING RELAY (0.	1	CMP22	W	106.71	0.00	106.71	91.00	15.71	Y
74/TAO-TAO	WHSE / BFD	1	CMP22	W	106.71	0.00	106.71	97.00	9.71	Y
86/TAO-TAO	WHSE / BFD	1	CMP22	W	106.71	0.00	106.71	97.00	9.71	Y
BFD/1-TAO	UNKNOWN / UNKNOWN	1	CMP22	W	106.71	0.00	106.71	97.00	9.71	Y

Path Voltage Drop Summary

Generation Date: 03/06/2008 11:01 am

Battery: 22 **Node:** 12 **Circuit:** BUS 6A **Schematic:** A208088

Device ID	Mfgr/Model	Path	Scenario	Time	Node Voltage	Path VD	Device Voltage	Required Voltage	Voltage Delta	Y/N
EDD1	ASCO / AUTO TRANSFER P/N 30	1	CMP22	W	106.71	0.00	106.71	101.00	5.71	Y

Path Voltage Drop Summary

Generation Date: 03/06/2008 11:01 am

Battery: 22 **Node:** 12 **Circuit:** BUS 6A **Schematic:** B225131

Device ID	Mfgr/Model	Path	Scenario	Time	Node Voltage	Path VD	Device Voltage	Required Voltage	Voltage Delta	Y/N
52CC-MG2	WHSE / DB-50-CC	1	CMP22	W	106.71	0.00	106.71	91.00	15.71	Y
52TC-MG2	WHSE / DB-50-TC	1	CMP22	W	106.71	0.00	106.71	71.00	35.71	Y
52X-MG2	WHSE / X- CLOSING RELAY (0.	1	CMP22	W	106.71	0.00	106.71	91.00	15.71	Y
74/2-MG2	WHSE / BFD	1	CMP22	W	106.71	0.00	106.71	97.00	9.71	Y

Path Voltage Drop Summary

Generation Date: 03/06/2008 11:01 am

Battery: 22 **Node:** 12 **Circuit:** BUS 6A **Schematic:** B225132

Device ID	Mfgr/Model	Path	Scenario	Time	Node Voltage	Path VD	Device Voltage	Required Voltage	Voltage Delta	Y/N
2/C3	AGASTAT / 7000 SERIES	1	CMP22	W	106.71	0.00	106.71	101.00	5.71	Y
52CC-C3	WHSE / DB-50-CC	1	CMP22	W	106.71	0.00	106.71	91.00	15.71	Y
52TC-C3	WHSE / DB-50-TC	1	CMP22	W	106.71	7.20	99.51	71.00	28.51	Y
52X-C3	WHSE / X- CLOSING RELAY (0.	1	CMP22	W	106.71	0.00	106.71	91.00	15.71	Y

Path Voltage Drop Summary

Generation Date: 03/06/2008 11:01 am

Battery: 22 **Node:** 12 **Circuit:** BUS 6A **Schematic:** B225137

Device ID	Mfgr/Model	Path	Scenario	Time	Node Voltage	Path VD	Device Voltage	Required Voltage	Voltage Delta	Y/N
2/RHR2	UNKNOWN / UNKNOWN	1	CMP22	W	106.71	0.00	106.71	97.00	9.71	Y
52CC-RHR2	WHSE / DB-50-CC	1	CMP22	W	106.71	0.00	106.71	91.00	15.71	Y
52TC-RHR2	WHSE / DB-50-TC	1	CMP22	W	106.71	0.00	106.71	71.00	35.71	Y
52X-RHR2	WHSE / X- CLOSING RELAY (0.	1	CMP22	W	106.71	0.00	106.71	91.00	15.71	Y
74-RHR2	WHSE / BFD	1	CMP22	W	106.71	0.00	106.71	97.00	9.71	Y

Path Voltage Drop Summary

Generation Date: 03/06/2008 11:01 am

Battery: 22 **Node:** 12 **Circuit:** BUS 6A **Schematic:** B225142

Device ID	Mfgr/Model	Path	Scenario	Time	Node Voltage	Path VD	Device Voltage	Required Voltage	Voltage Delta	Y/N
52CC-R2	WHSE / DB-50-CC	1	CMP22	W	106.71	0.00	106.71	91.00	15.71	Y
52TC-R2	WHSE / DB-50-TC	1	CMP22	W	106.71	0.00	106.71	71.00	35.71	Y
52X-R2	WHSE / X- CLOSING RELAY (0.	1	CMP22	W	106.71	0.00	106.71	91.00	15.71	Y
74-R2	WHSE / BFD	1	CMP22	W	106.71	0.00	106.71	97.00	9.71	Y

Path Voltage Drop Summary

Generation Date: 03/06/2008 11:01 am

Battery: 22 **Node:** 12 **Circuit:** BUS 6A **Schematic:** B225143

Device ID	Mfgr/Model	Path	Scenario	Time	Node Voltage	Path VD	Device Voltage	Required Voltage	Voltage Delta	Y/N
2/CRF5	UNKNOWN / UNKNOWN	1	CMP22	W	106.71	0.00	106.71	97.00	9.71	Y
52CC-CRF5	WHSE / DB-50-CC	1	CMP22	W	106.71	0.00	106.71	91.00	15.71	Y
52TC-CRF5	WHSE / DB-50-TC	1	CMP22	W	106.71	0.00	106.71	71.00	35.71	Y
52X-CRF5	WHSE / X- CLOSING RELAY (0.	1	CMP22	W	106.71	0.00	106.71	91.00	15.71	Y
74-CRF5	UNKNOWN / UNKNOWN	1	CMP22	W	106.71	0.00	106.71	97.00	9.71	Y

Path Voltage Drop Summary

Generation Date: 03/06/2008 11:01 am

Battery: 22 **Node:** 12 **Circuit:** BUS 6A **Schematic:** B225144

Device ID	Mfgr/Model	Path	Scenario	Time	Node Voltage	Path VD	Device Voltage	Required Voltage	Voltage Delta	Y/N
52CC-PC	WHSE / DB-50-CC	1	CMP22	W	106.71	0.00	106.71	91.00	15.71	Y
52TC-PC	WHSE / DB-50-TC	1	CMP22	W	106.71	0.00	106.71	71.00	35.71	Y
52X-PC	WHSE / X- CLOSING RELAY (0.	1	CMP22	W	106.71	0.00	106.71	91.00	15.71	Y

Path Voltage Drop Summary

Generation Date: 03/06/2008 11:01 am

Battery: 22 **Node:** 12 **Circuit:** BUS 6A **Schematic:** B225146

Device ID	Mfgr/Model	Path	Scenario	Time	Node Voltage	Path VD	Device Voltage	Required Voltage	Voltage Delta	Y/N
2/CS2-CS2	UNKNOWN / UNKNOWN	1	CMP22	W	106.71	0.00	106.71	97.00	9.71	Y
52CC-CS2	WHSE / DB-50-CC	1	CMP22	W	106.71	0.00	106.71	91.00	15.71	Y
52TC-CS2	WHSE / DB-50-TC	1	CMP22	W	106.71	1.74	104.97	71.00	33.97	Y
52X-CS2	WHSE / X- CLOSING RELAY (0.	1	CMP22	W	106.71	0.00	106.71	91.00	15.71	Y
74-CS2	WHSE / BFD	1	CMP22	W	106.71	0.00	106.71	97.00	9.71	Y

Path Voltage Drop Summary

Generation Date: 03/06/2008 11:01 am

Battery: 22 **Node:** 12 **Circuit:** BUS 6A **Schematic:** B225149

Device ID	Mfgr/Model	Path	Scenario	Time	Node Voltage	Path VD	Device Voltage	Required Voltage	Voltage Delta	Y/N
2/SW3-SW3	UNKNOWN / UNKNOWN	1	CMP22	W	106.71	0.00	106.71	97.00	9.71	Y
52CC-SW3	WHSE / DB-50-CC	1	CMP22	W	106.71	0.00	106.71	91.00	15.71	Y
52TC-SW3	WHSE / DB-50-TC	1	CMP22	W	106.71	0.00	106.71	71.00	35.71	Y
52X-SW3	WHSE / X- CLOSING RELAY (0.	1	CMP22	W	106.71	0.00	106.71	91.00	15.71	Y
74/SW3	UNKNOWN / UNKNOWN	1	CMP22	W	106.71	0.00	106.71	97.00	9.71	Y
M-SW3	UNKNOWN / TIME METER	1	CMP22	W	106.71	0.00	106.71	101.00	5.71	Y
S8C-SW3	UNKNOWN / UNKNOWN	1	CMP22	W	106.71	0.00	106.71	97.00	9.71	Y

Path Voltage Drop Summary

Generation Date: 03/06/2008 11:01 am

Battery: 22 **Node:** 12 **Circuit:** BUS 6A **Schematic:** B225151

Device ID	Mfgr/Model	Path	Scenario	Time	Node Voltage	Path VD	Device Voltage	Required Voltage	Voltage Delta	Y/N
52CC-CC3	WHSE / DB-50-CC	1	CMP22	W	106.71	0.00	106.71	91.00	15.71	Y
52TC-CC3	WHSE / DB-50-TC	1	CMP22	W	106.71	0.00	106.71	71.00	35.71	Y
52X-CC3	WHSE / X- CLOSING RELAY (0.	1	CMP22	W	106.71	0.00	106.71	91.00	15.71	Y
74-CC3	UNKNOWN / UNKNOWN	1	CMP22	W	106.71	0.00	106.71	97.00	9.71	Y
86-CC3	UNKNOWN / UNKNOWN	1	CMP22	W	106.71	0.00	106.71	97.00	9.71	Y
CC3-2TD-CC3	UNKNOWN / UNKNOWN	1	CMP22	W	106.71	0.00	106.71	97.00	9.71	Y

Path Voltage Drop Summary

Generation Date: 03/06/2008 11:01 am

Battery: 22 **Node:** 12 **Circuit:** BUS 6A **Schematic:** IP2-S-000194

Device ID	Mfgr/Model	Path	Scenario	Time	Node Voltage	Path VD	Device Voltage	Required Voltage	Voltage Delta	Y/N
2/SW6-SW6	UNKNOWN / UNKNOWN	1	CMP22	W	106.71	0.00	106.71	97.00	9.71	Y
52CC-SW6	WHSE / DB-50-CC	1	CMP22	W	106.71	0.00	106.71	91.00	15.71	Y
52TC-SW6	WHSE / DB-50-TC	1	CMP22	W	106.71	0.00	106.71	71.00	35.71	Y
52X-SW6	WHSE / X- CLOSING RELAY (0.	1	CMP22	W	106.71	0.00	106.71	91.00	15.71	Y
74/SW6	UNKNOWN / UNKNOWN	1	CMP22	W	106.71	0.00	106.71	97.00	9.71	Y
M-SW6	UNKNOWN / TIME METER	1	CMP22	W	106.71	0.00	106.71	101.00	5.71	Y
S8B-SW6	UNKNOWN / UNKNOWN	1	CMP22	W	106.71	0.00	106.71	97.00	9.71	Y

Path Voltage Drop Summary

Generation Date: 03/06/2008 11:01 am

Battery: 22 **Node:** 13 **Circuit:** PP22-07 **Schematic:** IP2--S-000054

Device ID	Mfgr/Model	Path	Scenario	Time	Node Voltage	Path VD	Device Voltage	Required Voltage	Voltage Delta	Y/N
GEN REG INV1	UNKNOWN / GEN REG. INVERTER	1	CMP22	W	106.36	0.00	106.36	105.00	1.36	Y

Path Voltage Drop Summary

Generation Date: 03/06/2008 11:01 am

Battery: 22 **Node:** 14 **Circuit:** PP22-09 **Schematic:** 9321-LL-3114 SH 02

Device ID	Mfgr/Model	Path	Scenario	Time	Node Voltage	Path VD	Device Voltage	Required Voltage	Voltage Delta	Y/N
52CC-UT3	WHSE / 75DH500-CC	1	CMP22	W	103.53	0.00	103.53	76.00	27.53	Y
52TC-UT3	WHSE / 75DH500-TC	1	CMP22	01	113.03	0.00	113.03	71.00	42.03	Y
52X-UT3	WHSE / 75DH500 Solenoid Ope	1	CMP22	W	103.53	0.00	103.53	76.00	27.53	Y
52Y-UT3	UNKNOWN / Y- CUT-OFF RELAY/0.0	1	CMP22	W	103.53	0.00	103.53	101.00	2.53	Y

Path Voltage Drop Summary

Generation Date: 03/06/2008 11:01 am

Battery: 22 **Node:** 14 **Circuit:** PP22-09 **Schematic:** 9321-LL-3114 SH 03

Device ID	Mfgr/Model	Path	Scenario	Time	Node Voltage	Path VD	Device Voltage	Required Voltage	Voltage Delta	Y/N
52M-UT3-ST6	WHSE / M-SPRING CHARGING MT	1	CMP22	04	113.06	0.00	113.06	91.00	22.06	Y
52M-UT3-ST6	WHSE / M-SPRING CHARGING MT	1	CMP22	05	113.06	0.00	113.06	91.00	22.06	Y
52M-UT3-ST6	WHSE / M-SPRING CHARGING MT	1	CMP22	06	113.03	0.00	113.03	91.00	22.03	Y
52M-UT3-ST6	WHSE / M-SPRING CHARGING MT	1	CMP22	07	113.06	0.00	113.06	91.00	22.06	Y
52M-UT3-ST6-I	WHSE / M-SPRING CHARGING MT	1	CMP22	03	107.70	0.00	107.70	91.00	16.70	Y
52MR-UT3-ST6	UNKNOWN / MR- MECH RELEASE RELAY	1	CMP22	W	103.53	0.00	103.53	101.00	2.53	Y
52MX-UT3-ST6	UNKNOWN / MX-CHARGING MTR ATUX	1	CMP22	02	113.20	0.00	113.20	101.00	12.20	Y
52MX-UT3-ST6	UNKNOWN / MX-CHARGING MTR ATUX	1	CMP22	03	107.70	0.00	107.70	101.00	6.70	Y
52MX-UT3-ST6	UNKNOWN / MX-CHARGING MTR ATUX	1	CMP22	36	109.55	0.00	109.55	101.00	8.55	Y
52MX-UT3-ST6	UNKNOWN / MX-CHARGING MTR ATUX	1	CMP22	37	106.82	0.00	106.82	101.00	5.82	Y
52TC-UT3-ST6	WHSE / 75DH500-TC	1	CMP22	W	103.53	0.00	103.53	71.00	32.53	Y
52X-UT3-ST6	WHSE / 75DH500 Stored Energ	1	CMP22	02	113.20	4.49	108.71	91.00	17.71	Y
52X-UT3-ST6	WHSE / 75DH500 Stored Energ	1	CMP22	03	107.70	4.28	103.43	91.00	12.43	Y
52X-UT3-ST6	WHSE / 75DH500 Stored Energ	1	CMP22	36	109.55	4.35	105.20	91.00	14.20	Y
52X-UT3-ST6	WHSE / 75DH500 Stored Energ	1	CMP22	37	106.82	4.24	102.58	91.00	11.58	Y
52Y-UT3-ST6	UNKNOWN / Y- CUT-OFF RELAY/S 0	1	CMP22	02	113.20	0.00	113.20	101.00	12.20	Y
52Y-UT3-ST6	UNKNOWN / Y- CUT-OFF RELAY/S 0	1	CMP22	03	107.70	0.00	107.70	101.00	6.70	Y
52Y-UT3-ST6	UNKNOWN / Y- CUT-OFF RELAY/S 0	1	CMP22	04	113.06	0.00	113.06	101.00	12.06	Y
52Y-UT3-ST6	UNKNOWN / Y- CUT-OFF RELAY/S 0	1	CMP22	05	113.06	0.00	113.06	101.00	12.06	Y
52Y-UT3-ST6	UNKNOWN / Y- CUT-OFF RELAY/S 0	1	CMP22	06	113.03	0.00	113.03	101.00	12.03	Y
52Y-UT3-ST6	UNKNOWN / Y- CUT-OFF RELAY/S 0	1	CMP22	07	113.06	0.00	113.06	101.00	12.06	Y
52Y-UT3-ST6	UNKNOWN / Y- CUT-OFF RELAY/S 0	1	CMP22	36	109.55	0.00	109.55	101.00	8.55	Y
52Y-UT3-ST6	UNKNOWN / Y- CUT-OFF RELAY/S 0	1	CMP22	37	106.82	0.00	106.82	101.00	5.82	Y

Path Voltage Drop Summary

Generation Date: 03/06/2008 11:01 am

Battery: 22 **Node:** 14 **Circuit:** PP22-09 **Schematic:** 9321-LL-3114 SH 04

Device ID	Mfgr/Model	Path	Scenario	Time	Node Voltage	Path VD	Device Voltage	Required Voltage	Voltage Delta	Y/N
52CC-UT4	WHSE / 75DH500-CC	1	CMP22	W	103.53	0.00	103.53	76.00	27.53	Y
52TC-UT4	WHSE / 75DH500-TC	1	CMP22	01	113.03	0.00	113.03	71.00	42.03	Y
52X-UT4	WHSE / 75DH500 Solenoid Ope	1	CMP22	W	103.53	0.00	103.53	76.00	27.53	Y
52Y-UT4	UNKNOWN / Y- CUT-OFF RELAY/6 0	1	CMP22	W	103.53	0.00	103.53	101.00	2.53	Y

Path Voltage Drop Summary

Generation Date: 03/06/2008 11:01 am

Battery: 22 **Node:** 14 **Circuit:** PP22-09 **Schematic:** 9321-LL-3114 SH 05

Device ID	Mfgr/Model	Path	Scenario	Time	Node Voltage	Path VD	Device Voltage	Required Voltage	Voltage Delta	Y/N
52M-UT4-ST6	WHSE / M-SPRING CHARGING MT	1	CMP22	04	113.06	0.00	113.06	91.00	22.06	Y
52M-UT4-ST6	WHSE / M-SPRING CHARGING MT	1	CMP22	05	113.06	0.00	113.06	91.00	22.06	Y
52M-UT4-ST6	WHSE / M-SPRING CHARGING MT	1	CMP22	06	113.03	0.00	113.03	91.00	22.03	Y
52M-UT4-ST6	WHSE / M-SPRING CHARGING MT	1	CMP22	07	113.06	0.00	113.06	91.00	22.06	Y
52M-UT4-ST6-I	WHSE / M-SPRING CHARGING MT	1	CMP22	03	107.70	0.00	107.70	91.00	16.70	Y
52MR-UT4-ST6	UNKNOWN / MR- MECH RELEASE REL	1	CMP22	W	103.53	0.00	103.53	101.00	2.53	Y
52MX-UT4-ST6	UNKNOWN / MX-CHARGING MTR AUX	1	CMP22	02	113.20	0.00	113.20	101.00	12.20	Y
52MX-UT4-ST6	UNKNOWN / MX-CHARGING MTR AUX	1	CMP22	03	107.70	0.00	107.70	101.00	6.70	Y
52TC-UT4-ST6	WHSE / 75DH500-TC	1	CMP22	W	103.53	0.00	103.53	71.00	32.53	Y
52X-UT4-ST6	WHSE / 75DH500 Stored Energ	1	CMP22	02	113.20	4.04	109.16	91.00	18.16	Y
52X-UT4-ST6	WHSE / 75DH500 Stored Energ	1	CMP22	03	107.70	3.84	103.86	91.00	12.86	Y
52Y-UT4-ST6	UNKNOWN / Y- CUT-OFF RELAY/S 0	1	CMP22	02	113.20	0.00	113.20	101.00	12.20	Y
52Y-UT4-ST6	UNKNOWN / Y- CUT-OFF RELAY/S 0	1	CMP22	03	107.70	0.00	107.70	101.00	6.70	Y
52Y-UT4-ST6	UNKNOWN / Y- CUT-OFF RELAY/S 0	1	CMP22	04	113.06	0.00	113.06	101.00	12.06	Y
52Y-UT4-ST6	UNKNOWN / Y- CUT-OFF RELAY/S 0	1	CMP22	05	113.06	0.00	113.06	101.00	12.06	Y
52Y-UT4-ST6	UNKNOWN / Y- CUT-OFF RELAY/S 0	1	CMP22	06	113.03	0.00	113.03	101.00	12.03	Y
52Y-UT4-ST6	UNKNOWN / Y- CUT-OFF RELAY/S 0	1	CMP22	07	113.06	0.00	113.06	101.00	12.06	Y

Path Voltage Drop Summary

Generation Date: 03/06/2008 11:01 am

Battery: 22 **Node:** 14 **Circuit:** PP22-09 **Schematic:** 9321-LL-3114 SH 06

Device ID	Mfgr/Model	Path	Scenario	Time	Node Voltage	Path VD	Device Voltage	Required Voltage	Voltage Delta	Y/N
52CC-ST6	WHSE / 75DH500-CC	1	CMP22	35	103.53	0.00	103.53	76.00	27.53	Y
52TC-ST6	WHSE / 75DH500-TC	1	CMP22	01	113.03	0.00	113.03	71.00	42.03	Y
52X-ST6	WHSE / 75DH500 Solenoid Ope	1	CMP22	34	109.83	0.00	109.83	76.00	33.83	Y
52X-ST6	WHSE / 75DH500 Solenoid Ope	1	CMP22	35	103.53	0.00	103.53	76.00	27.53	Y
52Y-ST6	UNKNOWN / Y- CUT-OFF RELAY/6-0	1	CMP22	34	109.83	0.00	109.83	101.00	8.83	Y
52Y-ST6	UNKNOWN / Y- CUT-OFF RELAY/6-0	1	CMP22	35	103.53	0.00	103.53	101.00	2.53	Y

Path Voltage Drop Summary

Generation Date: 03/06/2008 11:01 am

Battery: 22 **Node:** 14 **Circuit:** PP22-09 **Schematic:** 9321-LL-3114 SH 07

Device ID	Mfgr/Model	Path	Scenario	Time	Node Voltage	Path VD	Device Voltage	Required Voltage	Voltage Delta	Y/N
52CC-RCP23	WHSE / 75DH500-CC	1	CMP22	W	103.53	0.00	103.53	76.00	27.53	Y
52TC-RCP23	WHSE / 75DH500-TC	1	CMP22	18	111.44	0.00	111.44	71.00	40.44	Y
52TC-RCP23	WHSE / 75DH500-TC	1	CMP22	19	111.42	0.00	111.42	71.00	40.42	Y
52X-RCP23	WHSE / 75DH500 Solenoid Ope	1	CMP22	W	103.53	0.00	103.53	76.00	27.53	Y
52Y-RCP23	UNKNOWN / Y- CUT-OFF RELAY/0.0	1	CMP22	W	103.53	0.00	103.53	101.00	2.53	Y
S4-RCP23	UNKNOWN / UNKNOWN	1	CMP22	W	103.53	0.00	103.53	97.00	6.53	Y

Path Voltage Drop Summary

Generation Date: 03/06/2008 11:01 am

Battery: 22 **Node:** 14 **Circuit:** PP22-09 **Schematic:** 9321-LL-3114 SH 09

Device ID	Mfgr/Model	Path	Scenario	Time	Node Voltage	Path VD	Device Voltage	Required Voltage	Voltage Delta	Y/N
52CC-HDP21	WHSE / 75DH500-CC	1	CMP22	W	103.53	0.00	103.53	76.00	27.53	Y
52TC-HDP21	WHSE / 75DH500-TC	1	CMP22	18	111.44	0.00	111.44	71.00	40.44	Y
52TC-HDP21	WHSE / 75DH500-TC	1	CMP22	19	111.42	0.00	111.42	71.00	40.42	Y
52X-HDP21	WHSE / 75DH500 Solenoid Ope	1	CMP22	W	103.53	0.00	103.53	76.00	27.53	Y
52Y-HDP21	UNKNOWN / Y- CUT-OFF RELAY/0.0	1	CMP22	W	103.53	0.00	103.53	101.00	2.53	Y

Path Voltage Drop Summary

Generation Date: 03/06/2008 11:01 am

Battery: 22 **Node:** 14 **Circuit:** PP22-09 **Schematic:** 9321-LL-3114 SH 10

Device ID	Mfgr/Model	Path	Scenario	Time	Node Voltage	Path VD	Device Voltage	Required Voltage	Voltage Delta	Y/N
52CC-SS3	WHSE / 75DH500-CC	1	CMP22	W	103.53	0.00	103.53	76.00	27.53	Y
52TC-SS3	WHSE / 75DH500-TC	1	CMP22	18	111.44	0.00	111.44	71.00	40.44	Y
52TC-SS3	WHSE / 75DH500-TC	1	CMP22	19	111.42	0.00	111.42	71.00	40.42	Y
52X-SS3	WHSE / 75DH500 Solenoid Ope	1	CMP22	W	103.53	0.00	103.53	76.00	27.53	Y
52Y-SS3	UNKNOWN / Y- CUT-OFF	1	CMP22	W	103.53	0.00	103.53	101.00	2.53	Y

Path Voltage Drop Summary

Generation Date: 03/06/2008 11:01 am

Battery: 22 **Node:** 14 **Circuit:** PP22-09 **Schematic:** 9321-LL-3114 SH 11

Device ID	Mfgr/Model	Path	Scenario	Time	Node Voltage	Path VD	Device Voltage	Required Voltage	Voltage Delta	Y/N
52CC-RCP22	WHSE / 75DH500-CC	1	CMP22	W	103.53	0.00	103.53	76.00	27.53	Y
52TC-RCP22	WHSE / 75DH500-TC	1	CMP22	18	111.44	0.00	111.44	71.00	40.44	Y
52TC-RCP22	WHSE / 75DH500-TC	1	CMP22	19	111.42	0.00	111.42	71.00	40.42	Y
52X-RCP22	WHSE / 75DH500 Solenoid Ope	1	CMP22	W	103.53	0.00	103.53	76.00	27.53	Y
52Y-RCP22	UNKNOWN / Y- CUT-OFF RELAY/C 0	1	CMP22	W	103.53	0.00	103.53	101.00	2.53	Y
S9-RCP22	UNKNOWN / UNKNOWN	1	CMP22	W	103.53	0.00	103.53	97.00	6.53	Y

Path Voltage Drop Summary

Generation Date: 03/06/2008 11:01 am

Battery: 22 **Node:** 14 **Circuit:** PP22-09 **Schematic:** 9321-LL-3114 SH 12

Device ID	Mfgr/Model	Path	Scenario	Time	Node Voltage	Path VD	Device Voltage	Required Voltage	Voltage Delta	Y/N
52CC-CP23	WHSE / 75DH500-CC	1	CMP22	W	103.53	0.00	103.53	76.00	27.53	Y
52TC-CP23	WHSE / 75DH500-TC	1	CMP22	18	111.44	0.00	111.44	71.00	40.44	Y
52TC-CP23	WHSE / 75DH500-TC	1	CMP22	19	111.42	0.00	111.42	71.00	40.42	Y
52X-CP23	WHSE / 75DH500 Solenoid Ope	1	CMP22	W	103.53	0.00	103.53	76.00	27.53	Y
52Y-CP23	UNKNOWN / Y- CUT-OFF DELAY/0.0	1	CMP22	W	103.53	0.00	103.53	101.00	2.53	Y
CPAS/23-CP23	UNKNOWN / UNKNOWN	1	CMP22	W	103.53	0.00	103.53	97.00	6.53	Y

Path Voltage Drop Summary

Generation Date: 03/06/2008 11:01 am

Battery: 22 **Node:** 14 **Circuit:** PP22-09 **Schematic:** 9321-LL-3114 SH 14

Device ID	Mfgr/Model	Path	Scenario	Time	Node Voltage	Path VD	Device Voltage	Required Voltage	Voltage Delta	Y/N
52CC-HDP22	WHSE / 75DH500-CC	1	CMP22	W	103.53	0.00	103.53	76.00	27.53	Y
52TC-HDP22	WHSE / 75DH500-TC	1	CMP22	18	111.44	0.00	111.44	71.00	40.44	Y
52TC-HDP22	WHSE / 75DH500-TC	1	CMP22	19	111.42	0.00	111.42	71.00	40.42	Y
52X-HDP22	WHSE / 75DH500 Solenoid Ope	1	CMP22	W	103.53	0.00	103.53	76.00	27.53	Y
52Y-HDP22	UNKNOWN / Y- CUT-OFF RELAY/C.O.	1	CMP22	W	103.53	0.00	103.53	101.00	2.53	Y

Path Voltage Drop Summary

Generation Date: 03/06/2008 11:01 am

Battery: 22 **Node:** 14 **Circuit:** PP22-09 **Schematic:** 9321-LL-3114 SH 17

Device ID	Mfgr/Model	Path	Scenario	Time	Node Voltage	Path VD	Device Voltage	Required Voltage	Voltage Delta	Y/N
62/ST6	UNKNOWN / TD-53 TIME DELAY DEL	1	CMP22	W	103.53	0.00	103.53	101.00	2.53	Y
62/UT3	UNKNOWN / TD-53 TIME DELAY DEL	1	CMP22	W	103.53	0.00	103.53	101.00	2.53	Y
62/UT4	UNKNOWN / TD-53 TIME DELAY DEL	1	CMP22	W	103.53	0.00	103.53	101.00	2.53	Y
86/ST6	WHSE / TYPE WL	1	CMP22	W	103.53	0.00	103.53	71.00	32.53	Y
86/UT3	WHSE / TYPE WL	1	CMP22	W	103.53	0.00	103.53	71.00	32.53	Y
86/UT4	WHSE / TYPE WL	1	CMP22	W	103.53	0.00	103.53	71.00	32.53	Y

Path Voltage Drop Summary

Generation Date: 03/06/2008 11:01 am

Battery: 22 **Node:** 14 **Circuit:** PP22-09 **Schematic:** 9321-LL-3114 SH 18

Device ID	Mfgr/Model	Path	Scenario	Time	Node Voltage	Path VD	Device Voltage	Required Voltage	Voltage Delta	Y/N
71X/HDT	WHSE / SG	1	CMP22	W	103.53	0.00	103.53	101.00	2.53	Y
86X/ST6-OP	WHSE / MG-6	1	CMP22	W	103.53	0.00	103.53	101.00	2.53	Y
86X/ST6-RESET	WHSE / MG-6	1	CMP22	W	103.53	0.00	103.53	101.00	2.53	Y

Path Voltage Drop Summary

Generation Date: 03/06/2008 11:01 am

Battery: 22 **Node:** 14 **Circuit:** PP22-09 **Schematic:** 9321-LL-3114 SH 19

Device ID	Mfgr/Model	Path	Scenario	Time	Node Voltage	Path VD	Device Voltage	Required Voltage	Voltage Delta	Y/N
52CC-GT26	WHSE / 75DH500-CC	1	CMP22	35	103.53	0.00	103.53	76.00	27.53	Y
52TC-GT26	WHSE / 75DH500-TC	1	CMP22	W	103.53	0.00	103.53	71.00	32.53	Y
52X-GT26	WHSE / 75DH500 Solenoid Ope	1	CMP22	34	109.83	0.00	109.83	76.00	33.83	Y
52X-GT26	WHSE / 75DH500 Solenoid Ope	1	CMP22	35	103.53	0.00	103.53	76.00	27.53	Y
52Y-GT26	UNKNOWN / Y- CUT-OFF RELAY/0.0	1	CMP22	34	109.83	0.00	109.83	101.00	8.83	Y
52Y-GT26	UNKNOWN / Y- CUT-OFF RELAY/0.0	1	CMP22	35	103.53	0.00	103.53	101.00	2.53	Y

Path Voltage Drop Summary

Generation Date: 03/06/2008 11:01 am

Battery: 22 **Node:** 14 **Circuit:** PP22-09 **Schematic:** 9321-LL-3114 SH 20

Device ID	Mfgr/Model	Path	Scenario	Time	Node Voltage	Path VD	Device Voltage	Required Voltage	Voltage Delta	Y/N
51N-SS22RW3	WHSE / 51N OVERCURRENT RELA	1	CMP22	W	103.53	0.00	103.53	101.00	2.53	Y
52CC-SS22RW3	WHSE / 75DH500-CC	1	CMP22	W	103.53	0.00	103.53	76.00	27.53	Y
52TC-SS22RW3	WHSE / 75DH500-TC	1	CMP22	W	103.53	0.00	103.53	71.00	32.53	Y
52X-SS22RW3	WHSE / 75DH500 Solenoid Ope	1	CMP22	W	103.53	0.00	103.53	76.00	27.53	Y
52Y-SS22RW3	UNKNOWN / Y- CUT-OFF RELAY/2-2	1	CMP22	W	103.53	0.00	103.53	101.00	2.53	Y

Path Voltage Drop Summary

Generation Date: 03/06/2008 11:01 am

Battery: 22 **Node:** 14 **Circuit:** PP22-09 **Schematic:** 9321-LL-3114 SH 16

Device ID	Mfgr/Model	Path	Scenario	Time	Node Voltage	Path VD	Device Voltage	Required Voltage	Voltage Delta	Y/N
52CC-SS6	WHSE / 75DH500-CC	1	CMP22	35	103.53	0.00	103.53	76.00	27.53	Y
52TC-SS6	WHSE / 75DH500-TC	1	CMP22	18	111.44	0.00	111.44	71.00	40.44	Y
52TC-SS6	WHSE / 75DH500-TC	1	CMP22	19	111.42	0.00	111.42	71.00	40.42	Y
52X-SS6	WHSE / 75DH500 Solenoid Ope	1	CMP22	34	109.83	0.00	109.83	76.00	33.83	Y
52X-SS6	WHSE / 75DH500 Solenoid Ope	1	CMP22	35	103.53	0.00	103.53	76.00	27.53	Y
52Y-SS6	UNKNOWN / Y- CUT-OFF RELAY/6.0	1	CMP22	34	109.83	0.00	109.83	101.00	8.83	Y
52Y-SS6	UNKNOWN / Y- CUT-OFF RELAY/6.0	1	CMP22	35	103.53	0.00	103.53	101.00	2.53	Y

Path Voltage Drop Summary

Generation Date: 03/06/2008 11:01 am

Battery: 22 **Node:** 14 **Circuit:** PP22-09 **Schematic:** B225123

Device ID	Mfgr/Model	Path	Scenario	Time	Node Voltage	Path VD	Device Voltage	Required Voltage	Voltage Delta	Y/N
27-3/62-BUS 3 UV/UF	UNKNOWN / UNKNOWN	1	CMP22	W	103.53	0.00	103.53	97.00	6.53	Y
27-3/62X-BUS 3 UV/UF	WHSE / MG-6	1	CMP22	W	103.53	0.00	103.53	101.00	2.53	Y
27-3/ICS-BUS 3 UV/UF	WHSE / CV	1	CMP22	W	103.53	0.00	103.53	101.00	2.53	Y
27-3/X1-BUS 3 UV/UF	WHSE / MG-6, 24 V, W/ 300 O	1	CMP22	W	103.53	0.00	103.53	101.00	2.53	Y
27-3/X2-BUS 3 UV/UF	WHSE / MG-6	1	CMP22	W	103.53	0.00	103.53	101.00	2.53	Y
27-3/X3-BUS 3 UV/UF	WHSE / SG	1	CMP22	W	103.53	0.00	103.53	101.00	2.53	Y
81-3/ICS-BUS 3 UV/UF	WHSE / KF	1	CMP22	W	103.53	0.00	103.53	101.00	2.53	Y
81-3/X1-BUS 3 UV/UF	WHSE / MG-6	1	CMP22	W	103.53	0.00	103.53	101.00	2.53	Y

Path Voltage Drop Summary

Generation Date: 03/06/2008 11:01 am

Battery: 22 **Node:** 14 **Circuit:** PP22-09 **Schematic:** B225124

Device ID	Mfgr/Model	Path	Scenario	Time	Node Voltage	Path VD	Device Voltage	Required Voltage	Voltage Delta	Y/N
27-4/62-BUS 4 UV/UF	UNKNOWN / UNKNOWN	1	CMP22	W	103.53	0.00	103.53	97.00	6.53	Y
27-4/62X-BUS 4 UV/UF	WHSE / MG-6	1	CMP22	W	103.53	0.00	103.53	101.00	2.53	Y
27-4/ICS-BUS 4 UV/UF	WHSE / CV	1	CMP22	W	103.53	0.00	103.53	101.00	2.53	Y
27-4/X1-BUS 4 UV/UF	WHSE / MG-6, 24 V, W/ 300 O	1	CMP22	W	103.53	0.00	103.53	101.00	2.53	Y
27-4/X2-BUS 4 UV/UF	WHSE / MG-6	1	CMP22	W	103.53	0.00	103.53	101.00	2.53	Y
27-4/X3-BUS 4 UV/UF	WHSE / SG	1	CMP22	W	103.53	0.00	103.53	101.00	2.53	Y
81-4/ICS-BUS 4 UV/UF	WHSE / KF	1	CMP22	W	103.53	0.00	103.53	101.00	2.53	Y
81-4/X1-BUS 4 UV/UF	WHSE / MG-6	1	CMP22	W	103.53	0.00	103.53	101.00	2.53	Y

Path Voltage Drop Summary

Generation Date: 03/06/2008 11:01 am

Battery: 22 **Node:** 14 **Circuit:** PP22-09 **Schematic:** B225173

Device ID	Mfgr/Model	Path	Scenario	Time	Node Voltage	Path VD	Device Voltage	Required Voltage	Voltage Delta	Y/N
27-3/62A-BUS 3 UV/UF	AGASTAT / 2122DH39YC	1	CMP22	W	103.53	0.00	103.53	101.00	2.53	Y
27-3A-BUS 3 UV/UF	ABB / TYPE 27N, SERIES 411	1	CMP22	W	103.53	0.00	103.53	101.00	2.53	Y
27-4/62A-BUS 4 UV/UF	AGASTAT / 2122DH39YC	1	CMP22	W	103.53	0.00	103.53	101.00	2.53	Y
27-4A-BUS 4 UV/UF	ABB / TYPE 27N, SERIES 411	1	CMP22	W	103.53	0.00	103.53	101.00	2.53	Y

Path Voltage Drop Summary

Generation Date: 03/06/2008 11:01 am

Battery: 22 **Node:** 14 **Circuit:** PP22-09 **Schematic:** B231669

Device ID	Mfgr/Model	Path	Scenario	Time	Node Voltage	Path VD	Device Voltage	Required Voltage	Voltage Delta	Y/N
43/CWP22	UNKNOWN / UNKNOWN	1	CMP22	W	103.53	0.00	103.53	97.00	6.53	Y
49A/T-CWP22	UNKNOWN / UNKNOWN	1	CMP22	W	103.53	0.00	103.53	97.00	6.53	Y
49A/X-CWP22	UNKNOWN / UNKNOWN	1	CMP22	W	103.53	0.00	103.53	97.00	6.53	Y
49C/T-CWP22	UNKNOWN / UNKNOWN	1	CMP22	W	103.53	0.00	103.53	97.00	6.53	Y
49C/X-CWP22	UNKNOWN / UNKNOWN	1	CMP22	W	103.53	0.00	103.53	97.00	6.53	Y
52CC-CWP22	WHSE / 75DH500-CC	1	CMP22	W	103.53	0.00	103.53	76.00	27.53	Y
52TC-CWP22	WHSE / 75DH500-TC	1	CMP22	18	111.44	0.00	111.44	71.00	40.44	Y
52TC-CWP22	WHSE / 75DH500-TC	1	CMP22	19	111.42	0.00	111.42	71.00	40.42	Y
52X-CWP22	WHSE / 75DH500 Solenoid Ope	1	CMP22	W	103.53	0.00	103.53	76.00	27.53	Y
52Y-CWP22	UNKNOWN / Y- CUT-OFF	1	CMP22	W	103.53	0.00	103.53	101.00	2.53	Y
62/CWP22	UNKNOWN / UNKNOWN	1	CMP22	W	103.53	0.00	103.53	97.00	6.53	Y
62FLT/CWP22	UNKNOWN / UNKNOWN	1	CMP22	W	103.53	0.00	103.53	97.00	6.53	Y
63AR/CWP22	UNKNOWN / UNKNOWN	1	CMP22	W	103.53	0.00	103.53	97.00	6.53	Y

Path Voltage Drop Summary

Generation Date: 03/06/2008 11:01 am

Battery: 22 **Node:** 14 **Circuit:** PP22-09 **Schematic:** B231670

Device ID	Mfgr/Model	Path	Scenario	Time	Node Voltage	Path VD	Device Voltage	Required Voltage	Voltage Delta	Y/N
43/CWP24	UNKNOWN / UNKNOWN	1	CMP22	W	103.53	0.00	103.53	97.00	6.53	Y
49A/T-CWP24	UNKNOWN / UNKNOWN	1	CMP22	W	103.53	0.00	103.53	97.00	6.53	Y
49A/X-CWP24	UNKNOWN / UNKNOWN	1	CMP22	W	103.53	0.00	103.53	97.00	6.53	Y
49C/T-CWP24	UNKNOWN / UNKNOWN	1	CMP22	W	103.53	0.00	103.53	97.00	6.53	Y
49C/X-CWP24	UNKNOWN / UNKNOWN	1	CMP22	W	103.53	0.00	103.53	97.00	6.53	Y
52CC-CWP24	WHSE / 75DH500-CC	1	CMP22	W	103.53	0.00	103.53	76.00	27.53	Y
52TC-CWP24	WHSE / 75DH500-TC	1	CMP22	18	111.44	0.00	111.44	71.00	40.44	Y
52TC-CWP24	WHSE / 75DH500-TC	1	CMP22	19	111.42	0.00	111.42	71.00	40.42	Y
52X-CWP24	WHSE / 75DH500 Solenoid Ope	1	CMP22	W	103.53	0.00	103.53	76.00	27.53	Y
52Y-CWP24	UNKNOWN / Y- CUT-OFF RELAY/C.O.	1	CMP22	W	103.53	0.00	103.53	101.00	2.53	Y
62/CWP24	UNKNOWN / UNKNOWN	1	CMP22	W	103.53	0.00	103.53	97.00	6.53	Y
62FLT/CWP24	UNKNOWN / UNKNOWN	1	CMP22	W	103.53	0.00	103.53	97.00	6.53	Y
63AR/CWP24	UNKNOWN / UNKNOWN	1	CMP22	W	103.53	0.00	103.53	97.00	6.53	Y

Path Voltage Drop Summary

Generation Date: 03/06/2008 11:01 am

Battery: 22 **Node:** 14 **Circuit:** PP22-09 **Schematic:** B231671

Device ID	Mfgr/Model	Path	Scenario	Time	Node Voltage	Path VD	Device Voltage	Required Voltage	Voltage Delta	Y/N
43/CWP26	UNKNOWN / UNKNOWN	1	CMP22	W	103.53	0.00	103.53	97.00	6.53	Y
49A/T-CWP26	UNKNOWN / UNKNOWN	1	CMP22	W	103.53	0.00	103.53	97.00	6.53	Y
49A/X-CWP26	UNKNOWN / UNKNOWN	1	CMP22	W	103.53	0.00	103.53	97.00	6.53	Y
49C/T-CWP26	UNKNOWN / UNKNOWN	1	CMP22	W	103.53	0.00	103.53	97.00	6.53	Y
49C/X-CWP26	UNKNOWN / UNKNOWN	1	CMP22	W	103.53	0.00	103.53	97.00	6.53	Y
52CC-CWP26	WHSE / 75DH500-CC	1	CMP22	W	103.53	0.00	103.53	76.00	27.53	Y
52TC-CWP26	WHSE / 75DH500-TC	1	CMP22	18	111.44	0.00	111.44	71.00	40.44	Y
52TC-CWP26	WHSE / 75DH500-TC	1	CMP22	19	111.42	0.00	111.42	71.00	40.42	Y
52X-CWP26	WHSE / 75DH500 Solenoid Ope	1	CMP22	W	103.53	0.00	103.53	76.00	27.53	Y
52Y-CWP26	UNKNOWN / Y- CUT-OFF RELAY/S 2	1	CMP22	W	103.53	0.00	103.53	101.00	2.53	Y
62/CWP26	UNKNOWN / UNKNOWN	1	CMP22	W	103.53	0.00	103.53	97.00	6.53	Y
62FLT/CWP26	UNKNOWN / UNKNOWN	1	CMP22	W	103.53	0.00	103.53	97.00	6.53	Y
63AR/CWP26	UNKNOWN / UNKNOWN	1	CMP22	W	103.53	0.00	103.53	97.00	6.53	Y

Path Voltage Drop Summary

Generation Date: 03/06/2008 11:01 am

Battery: 22 **Node:** 15 **Circuit:** PP22-10 **Schematic:** 1986M03453

Device ID	Mfgr/Model	Path	Scenario	Time	Node Voltage	Path VD	Device Voltage	Required Voltage	Voltage Delta	Y/N
53A-GEN EXC BKR	UNKNOWN / UNKNOWN	1	CMP22	W	109.30	0.00	109.30	97.00	12.30	Y
53B-GEN EXC BKR	UNKNOWN / UNKNOWN	1	CMP22	W	109.30	0.00	109.30	97.00	12.30	Y
53TD-GEN EXC BKR	UNKNOWN / UNKNOWN	1	CMP22	W	109.30	0.00	109.30	97.00	12.30	Y
53X-GEN EXC BKR	UNKNOWN / UNKNOWN	1	CMP22	W	109.30	0.00	109.30	97.00	12.30	Y
FILTER 53A-GEN EXC BKR	UNKNOWN / FILTER FOR GEN FF	1	CMP22	W	109.30	0.00	109.30	101.00	8.30	Y
FILTER 53B-GEN EXC BKR	UNKNOWN / FILTER FOR GEN FF	1	CMP22	W	109.30	0.00	109.30	101.00	8.30	Y
FILTER 53TD-GEN EXC BKR	UNKNOWN / FILTER FOR GEN FF	1	CMP22	W	109.30	0.00	109.30	101.00	8.30	Y
FILTER 53X-GEN EXC BKR	UNKNOWN / FILTER FOR GEN FF	1	CMP22	W	109.30	0.00	109.30	101.00	8.30	Y

Path Voltage Drop Summary

Generation Date: 03/06/2008 11:01 am

Battery: 22 **Node:** 15 **Circuit:** PP22-10 **Schematic:** 1986M03496

Device ID	Mfgr/Model	Path	Scenario	Time	Node Voltage	Path VD	Device Voltage	Required Voltage	Voltage Delta	Y/N
57/CC-GEN EXC BKR	GE / Close Solenoid AKR-4	1	CMP22	W	109.30	0.00	109.30	101.00	8.30	Y
57/MTR-GEN EXC BKR	GE / Motor AKR-4B-50, GE	1	CMP22	W	109.30	0.00	109.30	101.00	8.30	Y
57/TC-GEN EXC BKR	GE / TC AKR-4B-50, GE BRE	1	CMP22	W	109.30	0.00	109.30	71.00	38.30	Y
57/W-GEN EXC BKR	GE / W AKR-4B-50, GE BREA	1	CMP22	W	109.30	0.00	109.30	86.00	23.30	Y
57/X-GEN EXC BKR	GE / X AKR-4B-50, GE BREA	1	CMP22	W	109.30	0.00	109.30	91.00	18.30	Y
BATTERY LINE FILTER PNL	GE / BATTERY LINE FILTER	1	CMP22	W	109.30	0.00	109.30	101.00	8.30	Y

Path Voltage Drop Summary

Generation Date: 03/06/2008 11:01 am

Battery: 22 **Node:** 15 **Circuit:** PP22-10 **Schematic:** 1986M03516

Device ID	Mfgr/Model	Path	Scenario	Time	Node Voltage	Path VD	Device Voltage	Required Voltage	Voltage Delta	Y/N
74T-GEN EXC BKR	UNKNOWN / UNKNOWN	1	CMP22	W	109.30	0.00	109.30	97.00	12.30	Y
TLED-1-GEN EXC BKR	UNKNOWN / LED	1	CMP22	W	109.30	0.00	109.30	1.00	108.30	Y
TLED-2-GEN EXC BKR	UNKNOWN / LED	1	CMP22	W	109.30	0.00	109.30	1.00	108.30	Y
TLED-3-GEN EXC BKR	UNKNOWN / LED	1	CMP22	W	109.30	0.00	109.30	1.00	108.30	Y
TLED-4-GEN EXC BKR	UNKNOWN / LED	1	CMP22	W	109.30	0.00	109.30	1.00	108.30	Y
ZD-GEN EXC BKR	UNKNOWN / ZENER DIODE 24V, 10W	1	CMP22	W	109.30	0.00	109.30	1.00	108.30	Y

Path Voltage Drop Summary

Generation Date: 03/06/2008 11:01 am

Battery: 22 **Node:** 15 **Circuit:** PP22-10 **Schematic:** 9321-LL-3130 SH 05

Device ID	Mfgr/Model	Path	Scenario	Time	Node Voltage	Path VD	Device Voltage	Required Voltage	Voltage Delta	Y/N
59T/TDPU-GEN EXC BKR	UNKNOWN / UNKNOWN	1	CMP22	W	109.30	0.00	109.30	97.00	12.30	Y

Path Voltage Drop Summary

Generation Date: 03/06/2008 11:01 am

Battery: 22 **Node:** 16 **Circuit:** PP22-11 **Schematic:** 110E073 SH 11

Device ID	Mfgr/Model	Path	Scenario	Time	Node Voltage	Path VD	Device Voltage	Required Voltage	Voltage Delta	Y/N
52CC-BYA	WHSE / DB-50-CC	1	CMP22	W	110.07	0.00	110.07	91.00	19.07	Y
52CC-RTB	WHSE / DB-50-CC	1	CMP22	W	110.07	0.00	110.07	91.00	19.07	Y
52R-RTB	UNKNOWN / R- 52R, RESET Rx	1	CMP22	W	110.07	0.00	110.07	101.00	9.07	Y
52TC-BYA	WHSE / DB-50-TC	1	CMP22	01	113.71	0.00	113.71	71.00	42.71	Y
52TC-RTB	WHSE / DB-50-TC	1	CMP22	01	113.71	0.00	113.71	71.00	42.71	Y
52X-BYA	WHSE / X- CLOSING RELAY (0.	1	CMP22	W	110.07	0.00	110.07	91.00	19.07	Y
52X-RTB	WHSE / X- CLOSING RELAY (0.	1	CMP22	W	110.07	0.00	110.07	91.00	19.07	Y

Path Voltage Drop Summary

Generation Date: 03/06/2008 11:01 am

Battery: 22 **Node:** 17 **Circuit:** DP22-01 **Schematic:** 9321-LL-3132 SH 07

Device ID	Mfgr/Model	Path	Scenario	Time	Node Voltage	Path VD	Device Voltage	Required Voltage	Voltage Delta	Y/N
85L2/345-345kV LINE	UNKNOWN / PILOT WIRE RECIEVER	1	CMP22	W	108.17	0.00	108.17	97.00	11.17	Y
86X1-345kV LINE	WHSE / BFD	1	CMP22	W	108.17	0.00	108.17	97.00	11.17	Y
87L2/345-345kV LINE	WHSE / TYPE HCB, DIFF CURRE	1	CMP22	W	108.17	0.00	108.17	101.00	7.17	Y
TD1/345-345kV LINE	UNKNOWN / UNKNOWN	1	CMP22	W	108.17	0.00	108.17	97.00	11.17	Y
TD2/345-345kV LINE	UNKNOWN / UNKNOWN	1	CMP22	W	108.17	0.00	108.17	97.00	11.17	Y
TD2X-345kV LINE	WHSE / BFD	1	CMP22	W	108.17	0.00	108.17	97.00	11.17	Y
TD3/345-345kV LINE	UNKNOWN / UNKNOWN	1	CMP22	W	108.17	0.00	108.17	97.00	11.17	Y

Path Voltage Drop Summary

Generation Date: 03/06/2008 11:01 am

Battery: 22 **Node:** 17 **Circuit:** DP22-01 **Schematic:** 9321-LL-3132 SH 09

Device ID	Mfgr/Model	Path	Scenario	Time	Node Voltage	Path VD	Device Voltage	Required Voltage	Voltage Delta	Y/N
85L2/138-138kV LINE	UNKNOWN / PILOT WIRE RECIEVER	1	CMP22	W	108.17	0.00	108.17	97.00	11.17	Y
87L2/138-138kV LINE	WHSE / TYPE HCB, DIFF CURRE	1	CMP22	W	108.17	0.00	108.17	101.00	7.17	Y
TD1-138kV LINE	UNKNOWN / UNKNOWN	1	CMP22	W	108.17	0.00	108.17	97.00	11.17	Y
TD2-138kV LINE	UNKNOWN / UNKNOWN	1	CMP22	W	108.17	0.00	108.17	97.00	11.17	Y
TD2X-138kV LINE	WHSE / BFD	1	CMP22	W	108.17	0.00	108.17	97.00	11.17	Y
TD3-138kV LINE	UNKNOWN / UNKNOWN	1	CMP22	W	108.17	0.00	108.17	97.00	11.17	Y

Path Voltage Drop Summary

Generation Date: 03/06/2008 11:01 am

Battery: 22 **Node:** 17 **Circuit:** DP22-01 **Schematic:** B225122

Device ID	Mfgr/Model	Path	Scenario	Time	Node Voltage	Path VD	Device Voltage	Required Voltage	Voltage Delta	Y/N
81T2-UVUF	WHSE / MG-6	1	CMP22	W	108.17	0.00	108.17	101.00	7.17	Y

Path Voltage Drop Summary

Generation Date: 03/06/2008 11:01 am

Battery: 22 **Node:** 17 **Circuit:** DP22-01 **Schematic:** B225125

Device ID	Mfgr/Model	Path	Scenario	Time	Node Voltage	Path VD	Device Voltage	Required Voltage	Voltage Delta	Y/N
27-6/62-UVUF	UNKNOWN / UNKNOWN	1	CMP22	W	108.17	0.00	108.17	97.00	11.17	Y
27-6/62X-UVUF	WHSE / MG-6	1	CMP22	W	108.17	0.00	108.17	101.00	7.17	Y
27-6/ICS-UVUF	WHSE / CV	1	CMP22	W	108.17	0.00	108.17	101.00	7.17	Y
27-6/X1-UVUF	WHSE / MG-6, 24 V, W/ 300 O	1	CMP22	W	108.17	0.00	108.17	101.00	7.17	Y

Path Voltage Drop Summary

Generation Date: 03/06/2008 11:01 am

Battery: 22 **Node:** 17 **Circuit:** DP22-02 **Schematic:** 9321-LL-3132 SH 11

Device ID	Mfgr/Model	Path	Scenario	Time	Node Voltage	Path VD	Device Voltage	Required Voltage	Voltage Delta	Y/N
201/C-BKR-7	UNKNOWN / UNKNOWN	1	CMP22	W	108.17	0.00	108.17	97.00	11.17	Y
294/T-BKR-7	UNKNOWN / UNKNOWN	1	CMP22	W	108.17	0.00	108.17	97.00	11.17	Y

Path Voltage Drop Summary

Generation Date: 03/06/2008 11:01 am

Battery: 22 **Node:** 17 **Circuit:** DP22-03 **Schematic:** 9321-LL-3132 SH 02

Device ID	Mfgr/Model	Path	Scenario	Time	Node Voltage	Path VD	Device Voltage	Required Voltage	Voltage Delta	Y/N
62/UT	UNKNOWN / TD-53 TIME DELAY	1	CMP22	W	108.17	0.00	108.17	101.00	7.17	Y
86/UT	WHSE / TYPE WL	1	CMP22	W	108.17	0.00	108.17	71.00	37.17	Y

Path Voltage Drop Summary

Generation Date: 03/06/2008 11:01 am

Battery: 22 **Node:** 17 **Circuit:** DP22-03 **Schematic:** 9321-LL-3132 SH 04

Device ID	Mfgr/Model	Path	Scenario	Time	Node Voltage	Path VD	Device Voltage	Required Voltage	Voltage Delta	Y/N
86/STBU	WHSE / TYPE WL	1	CMP22	W	108.17	0.00	108.17	71.00	37.17	Y

Path Voltage Drop Summary

Generation Date: 03/06/2008 11:01 am

Battery: 22 **Node:** 17 **Circuit:** DP22-03 **Schematic:** 9321-LL-3132 SH 05

Device ID	Mfgr/Model	Path	Scenario	Time	Node Voltage	Path VD	Device Voltage	Required Voltage	Voltage Delta	Y/N
25X2-MISC LO RLY	WHSE / MG-6	1	CMP22	W	108.17	0.00	108.17	101.00	7.17	Y

Path Voltage Drop Summary

Generation Date: 03/06/2008 11:01 am

Battery: 22 **Node:** 17 **Circuit:** DP22-03 **Schematic:** 9321-LL-3132 SH 13

Device ID	Mfgr/Model	Path	Scenario	Time	Node Voltage	Path VD	Device Voltage	Required Voltage	Voltage Delta	Y/N
86/STBU-A	WHSE / TYPE WL	1	CMP22	W	108.17	0.00	108.17	71.00	37.17	Y

Path Voltage Drop Summary

Generation Date: 03/06/2008 11:01 am

Battery: 22 **Node:** 17 **Circuit:** DP22-04 **Schematic:** B209518

Device ID	Mfgr/Model	Path	Scenario	Time	Node Voltage	Path VD	Device Voltage	Required Voltage	Voltage Delta	Y/N
SOV951	ASCO / CAT. NO. NP8320A183V	1	CMP22	W	108.17	0.00	108.17	91.00	17.17	Y

Path Voltage Drop Summary

Generation Date: 03/06/2008 11:01 am

Battery: 22 **Node:** 17 **Circuit:** DP22-04 **Schematic:** B209519

Device ID	Mfgr/Model	Path	Scenario	Time	Node Voltage	Path VD	Device Voltage	Required Voltage	Voltage Delta	Y/N
SOV953	ASCO / CAT. NO. NP8320A183V	1	CMP22	W	108.17	0.00	108.17	91.00	17.17	Y

Path Voltage Drop Summary

Generation Date: 03/06/2008 11:01 am

Battery: 22 **Node:** 17 **Circuit:** DP22-04 **Schematic:** B209520

Device ID	Mfgr/Model	Path	Scenario	Time	Node Voltage	Path VD	Device Voltage	Required Voltage	Voltage Delta	Y/N
SOV955C	UNKNOWN / UNKNOWN	1	CMP22	W	108.17	0.00	108.17	103.00	5.17	Y

Path Voltage Drop Summary

Generation Date: 03/06/2008 11:01 am

Battery: 22 **Node:** 17 **Circuit:** DP22-04 **Schematic:** B209521

Device ID	Mfgr/Model	Path	Scenario	Time	Node Voltage	Path VD	Device Voltage	Required Voltage	Voltage Delta	Y/N
SOV955D	UNKNOWN / UNKNOWN	1	CMP22	W	108.17	0.00	108.17	103.00	5.17	Y

Path Voltage Drop Summary

Generation Date: 03/06/2008 11:01 am

Battery: 22 **Node:** 17 **Circuit:** DP22-04 **Schematic:** B209522

Device ID	Mfgr/Model	Path	Scenario	Time	Node Voltage	Path VD	Device Voltage	Required Voltage	Voltage Delta	Y/N
SOV955E	UNKNOWN / UNKNOWN	1	CMP22	W	108.17	0.00	108.17	103.00	5.17	Y

Path Voltage Drop Summary

Generation Date: 03/06/2008 11:01 am

Battery: 22 **Node:** 17 **Circuit:** DP22-04 **Schematic:** B209523

Device ID	Mfgr/Model	Path	Scenario	Time	Node Voltage	Path VD	Device Voltage	Required Voltage	Voltage Delta	Y/N
SOV955F	ASCO / CAT. NO. NP8320A183E	1	CMP22	W	108.17	0.00	108.17	91.00	17.17	Y

Path Voltage Drop Summary

Generation Date: 03/06/2008 11:01 am

Battery: 22 **Node:** 17 **Circuit:** DP22-05 **Schematic:** 208416

Device ID	Mfgr/Model	Path	Scenario	Time	Node Voltage	Path VD	Device Voltage	Required Voltage	Voltage Delta	Y/N
1789/BRR-V1789	WHSE / BFD	1	CMP22	W	108.17	0.00	108.17	97.00	11.17	Y
SOV1789	ASCO / CAT. NO. NP8320A183V	1	CMP22	W	108.17	0.00	108.17	91.00	17.17	Y

Path Voltage Drop Summary

Generation Date: 03/06/2008 11:01 am

Battery: 22 **Node:** 17 **Circuit:** DP22-05 **Schematic:** 208417

Device ID	Mfgr/Model	Path	Scenario	Time	Node Voltage	Path VD	Device Voltage	Required Voltage	Voltage Delta	Y/N
1788/ARR-V1788	WHSE / BFD	1	CMP22	W	108.17	0.00	108.17	97.00	11.17	Y
SOV1788	ASCO / CAT. NO. NP8320A183V	1	CMP22	W	108.17	0.00	108.17	91.00	17.17	Y

Path Voltage Drop Summary

Generation Date: 03/06/2008 11:01 am

Battery: 22 **Node:** 17 **Circuit:** DP22-05 **Schematic:** 208419

Device ID	Mfgr/Model	Path	Scenario	Time	Node Voltage	Path VD	Device Voltage	Required Voltage	Voltage Delta	Y/N
548/ARR-V548	WHSE / BFD	1	CMP22	W	108.17	0.00	108.17	97.00	11.17	Y
SOV548	ASCO / CAT. NO. NP8314C28V	1	CMP22	W	108.17	0.00	108.17	91.00	17.17	Y

Path Voltage Drop Summary

Generation Date: 03/06/2008 11:01 am

Battery: 22 **Node:** 17 **Circuit:** DP22-05 **Schematic:** 208421

Device ID	Mfgr/Model	Path	Scenario	Time	Node Voltage	Path VD	Device Voltage	Required Voltage	Voltage Delta	Y/N
549/BRR-V549	WHSE / BFD	1	CMP22	W	108.17	0.00	108.17	97.00	11.17	Y
SOV549	ASCO / CAT. NO. NP8314C28V	1	CMP22	W	108.17	0.00	108.17	91.00	17.17	Y

Path Voltage Drop Summary

Generation Date: 03/06/2008 11:01 am

Battery: 22 **Node:** 17 **Circuit:** DP22-05 **Schematic:** 303686

Device ID	Mfgr/Model	Path	Scenario	Time	Node Voltage	Path VD	Device Voltage	Required Voltage	Voltage Delta	Y/N
SOV1600A	ASCO / CAT. NO. HCX8262220	1	CMP22	W	108.17	0.00	108.17	103.00	5.17	Y
SOV1600B	ASCO / CAT. NO. HCX8262220	1	CMP22	W	108.17	0.00	108.17	103.00	5.17	Y
SOV1600D	ASCO / CAT. NO. HCX8262220	1	CMP22	W	108.17	0.00	108.17	103.00	5.17	Y
SOV265	UNKNOWN / UNKNOWN	1	CMP22	W	108.17	0.00	108.17	103.00	5.17	Y

Path Voltage Drop Summary

Generation Date: 03/06/2008 11:01 am

Battery: 22 **Node:** 17 **Circuit:** DP22-05 **Schematic:** 303845

Device ID	Mfgr/Model	Path	Scenario	Time	Node Voltage	Path VD	Device Voltage	Required Voltage	Voltage Delta	Y/N
SOV1286	UNKNOWN / UNKNOWN	1	CMP22	W	108.17	0.00	108.17	103.00	5.17	Y
SOV1600E	ASCO / CAT. NO. HCX8262220	1	CMP22	W	108.17	0.00	108.17	103.00	5.17	Y
SOV1600F	ASCO / CAT. NO. HCX8262220	1	CMP22	W	108.17	0.00	108.17	103.00	5.17	Y
SOV1600G	ASCO / CAT. NO. HCX8262220	1	CMP22	W	108.17	0.00	108.17	103.00	5.17	Y

Path Voltage Drop Summary

Generation Date: 03/06/2008 11:01 am

Battery: 22 **Node:** 17 **Circuit:** DP22-05 **Schematic:** 304159

Device ID	Mfgr/Model	Path	Scenario	Time	Node Voltage	Path VD	Device Voltage	Required Voltage	Voltage Delta	Y/N
SOV1284	UNKNOWN / UNKNOWN	1	CMP22	W	108.17	0.00	108.17	103.00	5.17	Y
SOV1285	UNKNOWN / UNKNOWN	1	CMP22	W	108.17	0.00	108.17	103.00	5.17	Y
SOV1600H	ASCO / CAT. NO. HCX8262220	1	CMP22	W	108.17	0.00	108.17	103.00	5.17	Y
SOV1600J	ASCO / CAT. NO. HCX8262220	1	CMP22	W	108.17	0.00	108.17	103.00	5.17	Y
SOV1600K	ASCO / CAT. NO. HCX8262220	1	CMP22	W	108.17	0.00	108.17	103.00	5.17	Y

Path Voltage Drop Summary

Generation Date: 03/06/2008 11:01 am

Battery: 22 **Node:** 17 **Circuit:** DP22-05 **Schematic:** A207559

Device ID	Mfgr/Model	Path	Scenario	Time	Node Voltage	Path VD	Device Voltage	Required Voltage	Voltage Delta	Y/N
1/SJAE-X	WHSE / BFD	1	CMP22	W	108.17	0.00	108.17	97.00	11.17	Y
33-2X	WHSE / BFD	1	CMP22	W	108.17	0.00	108.17	97.00	11.17	Y
33-4X	WHSE / BFD	1	CMP22	W	108.17	0.00	108.17	97.00	11.17	Y

Path Voltage Drop Summary

Generation Date: 03/06/2008 11:01 am

Battery: 22 **Node:** 17 **Circuit:** DP22-05 **Schematic:** B207571

Device ID	Mfgr/Model	Path	Scenario	Time	Node Voltage	Path VD	Device Voltage	Required Voltage	Voltage Delta	Y/N
SOV1430	ASCO / CAT. NO. NP8321A5DE	1	CMP22	W	108.17	0.00	108.17	91.00	17.17	Y
SOV1433	ASCO / CAT. NO. 8300C58RF	1	CMP22	W	108.17	0.00	108.17	103.00	5.17	Y

Path Voltage Drop Summary

Generation Date: 03/06/2008 11:01 am

Battery: 22 **Node:** 17 **Circuit:** DP22-05 **Schematic:** B208435

Device ID	Mfgr/Model	Path	Scenario	Time	Node Voltage	Path VD	Device Voltage	Required Voltage	Voltage Delta	Y/N
10SGIS/BRR	UNKNOWN / UNKNOWN	1	CMP22	W	108.17	0.00	108.17	97.00	11.17	Y
9SGIS/BRR	UNKNOWN / UNKNOWN	1	CMP22	W	108.17	0.00	108.17	97.00	11.17	Y

Path Voltage Drop Summary

Generation Date: 03/06/2008 11:01 am

Battery: 22 **Node:** 17 **Circuit:** DP22-08 **Schematic:** 110E073 SH 11

Device ID	Mfgr/Model	Path	Scenario	Time	Node Voltage	Path VD	Device Voltage	Required Voltage	Voltage Delta	Y/N
BYA/RT/BX-RX TRIP TR B	WHSE / BFD	1	CMP22	W	108.17	0.00	108.17	97.00	11.17	Y
S166/ST-52/RTB	GE / TYPE HGA	1	CMP22	W	108.17	0.00	108.17	101.00	7.17	Y
S167/ST1-52/RTB	GE / TYPE HGA	1	CMP22	W	108.17	0.00	108.17	101.00	7.17	Y
UV-52/BYA-RX TRIP TR B	UNKNOWN / UV RELAY	1	CMP22	W	108.17	0.00	108.17	101.00	7.17	Y
UV-52/RTB-RX TRIP TR B	UNKNOWN / UV RELAY	1	CMP22	W	108.17	0.00	108.17	101.00	7.17	Y

Path Voltage Drop Summary

Generation Date: 03/06/2008 11:01 am

Battery: 22 **Node:** 17 **Circuit:** DP22-08 **Schematic:** 110E073 SH 9

Device ID	Mfgr/Model	Path	Scenario	Time	Node Voltage	Path VD	Device Voltage	Required Voltage	Voltage Delta	Y/N
27/2/X-1/X-RX TRIP TR B	UNKNOWN / UNKNOWN	1	CMP22	W	108.17	0.00	108.17	97.00	11.17	Y
27/3/X-1/X-RX TRIP TR B	UNKNOWN / UNKNOWN	1	CMP22	W	108.17	0.00	108.17	97.00	11.17	Y
52/RCP21X-RX TRIP TR B	WHSE / TYPE BFD, STYLE 5072	1	CMP22	W	108.17	0.00	108.17	97.00	11.17	Y
52/RCP22X-RX TRIP TR B	WHSE / TYPE BFD, STYLE 5072	1	CMP22	W	108.17	0.00	108.17	97.00	11.17	Y
52/RCP23X-RX TRIP TR B	WHSE / TYPE BFD, STYLE 5072	1	CMP22	W	108.17	0.00	108.17	97.00	11.17	Y
52/RCP24X-RX TRIP TR B	WHSE / TYPE BFD, STYLE 5072	1	CMP22	W	108.17	0.00	108.17	97.00	11.17	Y

Path Voltage Drop Summary

Generation Date: 03/06/2008 11:01 am

Battery: 22 **Node:** 17 **Circuit:** DP22-08 **Schematic:** 110E073 SH 2

Device ID	Mfgr/Model	Path	Scenario	Time	Node Voltage	Path VD	Device Voltage	Required Voltage	Voltage Delta	Y/N
15-RX TRIP TR B	WHSE / TYPE BFD, STYLE 5072	1	CMP22	W	108.17	0.00	108.17	97.00	11.17	Y
16-RX TRIP TR B	WHSE / TYPE BFD, STYLE 5072	1	CMP22	W	108.17	0.00	108.17	97.00	11.17	Y
17-RX TRIP TR B	WHSE / TYPE BFD, STYLE 5072	1	CMP22	W	108.17	0.00	108.17	97.00	11.17	Y
18-RX TRIP TR B	WHSE / TYPE BFD, STYLE 5072	1	CMP22	W	108.17	0.00	108.17	97.00	11.17	Y
21-RX TRIP TR B	WHSE / TYPE BFD, STYLE 5072	1	CMP22	W	108.17	0.00	108.17	97.00	11.17	Y
22-RX TRIP TR B	WHSE / TYPE BFD, STYLE 5072	1	CMP22	W	108.17	0.00	108.17	97.00	11.17	Y
LF/1X-RX TRIP TR B	WHSE / TYPE BFD, STYLE 5072	1	CMP22	W	108.17	0.00	108.17	97.00	11.17	Y
LF/2X-RX TRIP TR B	WHSE / TYPE BFD, STYLE 5072	1	CMP22	W	108.17	0.00	108.17	97.00	11.17	Y
LF/3X-RX TRIP TR B	WHSE / TYPE BFD, STYLE 5072	1	CMP22	W	108.17	0.00	108.17	97.00	11.17	Y
LF/4X-RX TRIP TR B	WHSE / TYPE BFD, STYLE 5072	1	CMP22	W	108.17	0.00	108.17	97.00	11.17	Y
P-10-1-RX TRIP TR B	WHSE / TYPE BFD, STYLE 5072	1	CMP22	W	108.17	0.00	108.17	97.00	11.17	Y
P-10-2-RX TRIP TR B	WHSE / TYPE BFD, STYLE 5072	1	CMP22	W	108.17	0.00	108.17	97.00	11.17	Y
P-7-1-RX TRIP TR B	WHSE / TYPE BFD, STYLE 5072	1	CMP22	W	108.17	0.00	108.17	97.00	11.17	Y
P-7-2-RX TRIP TR B	WHSE / TYPE BFD, STYLE 5072	1	CMP22	W	108.17	0.00	108.17	97.00	11.17	Y
P-7-3-RX TRIP TR B	WHSE / TYPE BFD, STYLE 5072	1	CMP22	W	108.17	0.00	108.17	97.00	11.17	Y
P-7-4-RX TRIP TR B	WHSE / TYPE BFD, STYLE 5072	1	CMP22	W	108.17	0.00	108.17	97.00	11.17	Y
P8-1-RX TRIP TR B	WHSE / TYPE BFD, STYLE 5072	1	CMP22	W	108.17	0.00	108.17	97.00	11.17	Y
P8-2-RX TRIP TR B	WHSE / TYPE BFD, STYLE 5072	1	CMP22	W	108.17	0.00	108.17	97.00	11.17	Y
RT1-RX TRIP TR B	WHSE / TYPE BFD, STYLE 5072	1	CMP22	W	108.17	0.00	108.17	97.00	11.17	Y
RT10-RX TRIP TR B	WHSE / TYPE BFD, STYLE 5072	1	CMP22	W	108.17	0.00	108.17	97.00	11.17	Y
RT11-RX TRIP TR B	WHSE / TYPE BFD, STYLE 5072	1	CMP22	W	108.17	0.00	108.17	97.00	11.17	Y
RT12-RX TRIP TR B	WHSE / TYPE BFD, STYLE 5072	1	CMP22	W	108.17	0.00	108.17	97.00	11.17	Y
RT13-RX TRIP TR B	WHSE / TYPE BFD, STYLE 5072	1	CMP22	W	108.17	0.00	108.17	97.00	11.17	Y
RT14-RX TRIP TR B	WHSE / TYPE BFD, STYLE 5072	1	CMP22	W	108.17	0.00	108.17	97.00	11.17	Y
RT15-RX TRIP TR B	WHSE / TYPE BFD, STYLE 5072	1	CMP22	W	108.17	0.00	108.17	97.00	11.17	Y
RT16-RX TRIP TR B	WHSE / TYPE BFD, STYLE 5072	1	CMP22	W	108.17	0.00	108.17	97.00	11.17	Y
RT17-RX TRIP TR B	WHSE / BFD	1	CMP22	W	108.17	0.00	108.17	97.00	11.17	Y
RT18-RX TRIP TR B	WHSE / BFD	1	CMP22	W	108.17	0.00	108.17	97.00	11.17	Y
RT2-RX TRIP TR B	WHSE / TYPE BFD, STYLE 5072	1	CMP22	W	108.17	0.00	108.17	97.00	11.17	Y
RT3-RX TRIP TR B	WHSE / TYPE BFD, STYLE 5072	1	CMP22	W	108.17	0.00	108.17	97.00	11.17	Y
RT4-RX TRIP TR B	WHSE / TYPE BFD, STYLE 5072	1	CMP22	W	108.17	0.00	108.17	97.00	11.17	Y
RT5-RX TRIP TR B	WHSE / TYPE BFD, STYLE 5072	1	CMP22	W	108.17	0.00	108.17	97.00	11.17	Y
RT6-RX TRIP TR B	WHSE / TYPE BFD, STYLE 5072	1	CMP22	W	108.17	0.00	108.17	97.00	11.17	Y
RT7-RX TRIP TR B	WHSE / TYPE BFD, STYLE 5072	1	CMP22	W	108.17	0.00	108.17	97.00	11.17	Y
RT8-RX TRIP TR B	WHSE / TYPE BFD, STYLE 5072	1	CMP22	W	108.17	0.00	108.17	97.00	11.17	Y
RT9-RX TRIP TR B	WHSE / TYPE BFD, STYLE 5072	1	CMP22	W	108.17	0.00	108.17	97.00	11.17	Y

Path Voltage Drop Summary

Generation Date: 03/06/2008 11:01 am

Battery: 22 **Node:** 17 **Circuit:** DP22-08 **Schematic:** 110E073 SH 3

Device ID	Mfgr/Model	Path	Scenario	Time	Node Voltage	Path VD	Device Voltage	Required Voltage	Voltage Delta	Y/N
1/NC32B/X-RX TRIP TR B	UNKNOWN / UNKNOWN	1	CMP22	W	108.17	0.00	108.17	97.00	11.17	Y
1/NC32B/Y-RX TRIP TR B	UNKNOWN / UNKNOWN	1	CMP22	W	108.17	0.00	108.17	97.00	11.17	Y
1/NC32B/Z-RX TRIP TR B	UNKNOWN / UNKNOWN	1	CMP22	W	108.17	0.00	108.17	97.00	11.17	Y
1/NC33B/X-RX TRIP TR B	UNKNOWN / UNKNOWN	1	CMP22	W	108.17	0.00	108.17	97.00	11.17	Y
1/NC33B/Z-RX TRIP TR B	UNKNOWN / UNKNOWN	1	CMP22	W	108.17	0.00	108.17	97.00	11.17	Y
1/NC35A/X-RX TRIP TR B	UNKNOWN / UNKNOWN	1	CMP22	W	108.17	0.00	108.17	97.00	11.17	Y
1/NC35A/Y-RX TRIP TR B	UNKNOWN / UNKNOWN	1	CMP22	W	108.17	0.00	108.17	97.00	11.17	Y
1/NC35A/Z-RX TRIP TR B	UNKNOWN / UNKNOWN	1	CMP22	W	108.17	0.00	108.17	97.00	11.17	Y
1/NC36A/X- RX TRIP TR B	UNKNOWN / UNKNOWN	1	CMP22	W	108.17	0.00	108.17	97.00	11.17	Y
1/NC36A/Y- RX TRIP TR B	UNKNOWN / UNKNOWN	1	CMP22	W	108.17	0.00	108.17	97.00	11.17	Y
1/NC36A/Z- RX TRIP TR B	UNKNOWN / UNKNOWN	1	CMP22	W	108.17	0.00	108.17	97.00	11.17	Y
1/NC38B/X-RX TRIP TR B	UNKNOWN / UNKNOWN	1	CMP22	W	108.17	0.00	108.17	97.00	11.17	Y
1/NC38B/Z-RX TRIP TR B	UNKNOWN / UNKNOWN	1	CMP22	W	108.17	0.00	108.17	97.00	11.17	Y
1/NC39A/X-RX TRIP TR B	UNKNOWN / UNKNOWN	1	CMP22	W	108.17	0.00	108.17	97.00	11.17	Y
1/NC39B/X-RX TRIP TR B	UNKNOWN / UNKNOWN	1	CMP22	W	108.17	0.00	108.17	97.00	11.17	Y
1/NC47B/X-RX TRIP TR B	UNKNOWN / UNKNOWN	1	CMP22	W	108.17	0.00	108.17	97.00	11.17	Y
1/NC47B/Z-RX TRIP TR B	UNKNOWN / UNKNOWN	1	CMP22	W	108.17	0.00	108.17	97.00	11.17	Y

Path Voltage Drop Summary

Generation Date: 03/06/2008 11:01 am

Battery: 22 **Node:** 17 **Circuit:** DP22-08 **Schematic:** 110E073 SH 5

Device ID	Mfgr/Model	Path	Scenario	Time	Node Voltage	Path VD	Device Voltage	Required Voltage	Voltage Delta	Y/N
SIAM/1-X-RX TRIP TR B	WHSE / TYPE BFD, STYLE 5072	1	CMP22	W	108.17	0.00	108.17	97.00	11.17	Y
SIAM/2-X-RX TRIP TR B	WHSE / TYPE BFD, STYLE 5072	1	CMP22	W	108.17	0.00	108.17	97.00	11.17	Y

Path Voltage Drop Summary

Generation Date: 03/06/2008 11:01 am

Battery: 22 **Node:** 17 **Circuit:** DP22-08 **Schematic:** 110E073 SH 8

Device ID	Mfgr/Model	Path	Scenario	Time	Node Voltage	Path VD	Device Voltage	Required Voltage	Voltage Delta	Y/N
1/MT/1-X-RX TRIP TR B	WHSE / TYPE BFD, STYLE 5072	1	CMP22	W	108.17	0.00	108.17	97.00	11.17	Y
1/MT/2-X-RX TRIP TR B	WHSE / TYPE BFD, STYLE 5072	1	CMP22	W	108.17	0.00	108.17	97.00	11.17	Y

Path Voltage Drop Summary

Generation Date: 03/06/2008 11:01 am

Battery: 22 **Node:** 17 **Circuit:** DP22-09 **Schematic:** 9321-LL-3140 SH 12

Device ID	Mfgr/Model	Path	Scenario	Time	Node Voltage	Path VD	Device Voltage	Required Voltage	Voltage Delta	Y/N
1X/RS-BFP22 TT	WHSE / BFD	1	CMP22	W	108.17	0.00	108.17	97.00	11.17	Y
20/RSV-BFP22 TT	UNKNOWN / UNKNOWN	1	CMP22	W	108.17	0.00	108.17	103.00	5.17	Y
20/TT-1-BFP22 TT	UNKNOWN / UNKNOWN	1	CMP22	W	108.17	0.00	108.17	103.00	5.17	Y
20/TT-2-BFP22 TT	UNKNOWN / UNKNOWN	1	CMP22	W	108.17	0.00	108.17	103.00	5.17	Y
3RS/BFP2	WHSE / BFD	1	CMP22	W	108.17	0.00	108.17	97.00	11.17	Y
63/BOX-BFP22 TT	UNKNOWN / UNKNOWN	1	CMP22	W	108.17	0.00	108.17	97.00	11.17	Y
63/DPX-BFP22 TT	UNKNOWN / UNKNOWN	1	CMP22	W	108.17	0.00	108.17	97.00	11.17	Y
63X/BFP2	UNKNOWN / UNKNOWN	1	CMP22	W	108.17	0.00	108.17	97.00	11.17	Y
63X/LV-BFP22 TT	WHSE / BFD	1	CMP22	W	108.17	0.00	108.17	97.00	11.17	Y
63X/SCMIN-BFP22 TT	UNKNOWN / UNKNOWN	1	CMP22	W	108.17	0.00	108.17	97.00	11.17	Y
63X1/BFP2	WHSE / BFD	1	CMP22	W	108.17	0.00	108.17	97.00	11.17	Y
63X2/BFP2	WHSE / BFD	1	CMP22	W	108.17	0.00	108.17	97.00	11.17	Y
74-BFP22 T T	WHSE / BFD	1	CMP22	W	108.17	0.00	108.17	97.00	11.17	Y
UNKWN-RELAY-BFP22 T T	UNKNOWN / UNKNOWN	1	CMP22	W	108.17	0.00	108.17	97.00	11.17	Y

Path Voltage Drop Summary

Generation Date: 03/06/2008 11:01 am

Battery: 22 **Node:** 17 **Circuit:** DP22-09 **Schematic:** 9321-LL-3140 SH 14

Device ID	Mfgr/Model	Path	Scenario	Time	Node Voltage	Path VD	Device Voltage	Required Voltage	Voltage Delta	Y/N
20/LP-SVC2	UNKNOWN / SOV - OPERATES AS W	1	CMP22	W	108.17	0.00	108.17	103.00	5.17	Y
33X-BFP22 LPSVC2	UNKNOWN / UNKNOWN	1	CMP22	W	108.17	0.00	108.17	97.00	11.17	Y
33X/1-BFP22 LPSVC2	UNKNOWN / UNKNOWN	1	CMP22	W	108.17	0.00	108.17	97.00	11.17	Y
33X/2-BFP22 LPSVC2	UNKNOWN / UNKNOWN	1	CMP22	W	108.17	0.00	108.17	97.00	11.17	Y
33X/3-BFP22 LPSVC2	UNKNOWN / UNKNOWN	1	CMP22	W	108.17	0.00	108.17	97.00	11.17	Y
72L/BFP22 LPSVC2	UNKNOWN / UNKNOWN	1	CMP22	W	108.17	0.00	108.17	97.00	11.17	Y
72R/BFP22 LPSVC2	UNKNOWN / UNKNOWN	1	CMP22	W	108.17	0.00	108.17	97.00	11.17	Y

Path Voltage Drop Summary

Generation Date: 03/06/2008 11:01 am

Battery: 22 **Node:** 17 **Circuit:** DP22-09 **Schematic:** 9321-LL-3140 SH 15

Device ID	Mfgr/Model	Path	Scenario	Time	Node Voltage	Path VD	Device Voltage	Required Voltage	Voltage Delta	Y/N
20/HP-SVC2	UNKNOWN / SOV - OPERATES AS VI	1	CMP22	W	108.17	0.00	108.17	103.00	5.17	Y
33X/1-BFP22 HPSVC2	UNKNOWN / UNKNOWN	1	CMP22	W	108.17	0.00	108.17	97.00	11.17	Y
33X/2-BFP22 HPSVC2	UNKNOWN / UNKNOWN	1	CMP22	W	108.17	0.00	108.17	97.00	11.17	Y
33X/3-BFP22 HPSVC2	UNKNOWN / UNKNOWN	1	CMP22	W	108.17	0.00	108.17	97.00	11.17	Y
72L/BFP22 HPSVC2	UNKNOWN / UNKNOWN	1	CMP22	W	108.17	0.00	108.17	97.00	11.17	Y
72R/BFP22 HPSVC2	UNKNOWN / UNKNOWN	1	CMP22	W	108.17	0.00	108.17	97.00	11.17	Y

Path Voltage Drop Summary

Generation Date: 03/06/2008 11:01 am

Battery: 22 **Node:** 17 **Circuit:** DP22-09 **Schematic:** 9321-LL-3140 SH 16

Device ID	Mfgr/Model	Path	Scenario	Time	Node Voltage	Path VD	Device Voltage	Required Voltage	Voltage Delta	Y/N
20/BFPR2	UNKNOWN / UNKNOWN	1	CMP22	W	108.17	0.00	108.17	103.00	5.17	Y
80X1/BFPR2	UNKNOWN / FLOW SWITCH	1	CMP22	W	108.17	0.00	108.17	97.00	11.17	Y
TD/BFPR2	UNKNOWN / UNKNOWN	1	CMP22	W	108.17	0.00	108.17	97.00	11.17	Y

Path Voltage Drop Summary

Generation Date: 03/06/2008 11:01 am

Battery: 22 **Node:** 17 **Circuit:** DP22-11 **Schematic:** 225232

Device ID	Mfgr/Model	Path	Scenario	Time	Node Voltage	Path VD	Device Voltage	Required Voltage	Voltage Delta	Y/N
2/CC1-1	AGASTAT / AGA 2412	1	CMP22	W	108.17	0.00	108.17	97.00	11.17	Y
2/CC5	AGASTAT / UNKNOWN	1	CMP22	W	108.17	0.00	108.17	101.00	7.17	Y
2/SW3-2	AGASTAT / AGA 2412	1	CMP22	W	108.17	0.00	108.17	97.00	11.17	Y
2/SW6-2	AGASTAT / AGA 2412	1	CMP22	W	108.17	0.00	108.17	97.00	11.17	Y
52/EGX	WHSE / BFD	1	CMP22	W	108.17	0.00	108.17	97.00	11.17	Y
52/SWX	WHSE / BFD	1	CMP22	W	108.17	0.00	108.17	97.00	11.17	Y

Path Voltage Drop Summary

Generation Date: 03/06/2008 11:01 am

Battery: 22 **Node:** 17 **Circuit:** DP22-11 **Schematic:** B225227

Device ID	Mfgr/Model	Path	Scenario	Time	Node Voltage	Path VD	Device Voltage	Required Voltage	Voltage Delta	Y/N
52/CS1X	WHSE / BFD	1	CMP22	W	108.17	0.00	108.17	97.00	11.17	Y
52/CS2X	WHSE / BFD	1	CMP22	W	108.17	0.00	108.17	97.00	11.17	Y
52/SI1X	WHSE / BFD	1	CMP22	W	108.17	0.00	108.17	97.00	11.17	Y
52/SI2X	WHSE / BFD	1	CMP22	W	108.17	0.00	108.17	97.00	11.17	Y
52/SI3X	WHSE / BFD	1	CMP22	W	108.17	0.00	108.17	97.00	11.17	Y
SI/RL	WHSE / BFD	1	CMP22	W	108.17	0.00	108.17	97.00	11.17	Y

Path Voltage Drop Summary

Generation Date: 03/06/2008 11:01 am

Battery: 22 **Node:** 17 **Circuit:** DP22-11 **Schematic:** B225228

Device ID	Mfgr/Model	Path	Scenario	Time	Node Voltage	Path VD	Device Voltage	Required Voltage	Voltage Delta	Y/N
2/CC1	AGASTAT / AGA 2412	1	CMP22	W	108.17	0.00	108.17	97.00	11.17	Y
2/CC2	AGASTAT / AGA 2412	1	CMP22	W	108.17	0.00	108.17	97.00	11.17	Y
2/CC4	AGASTAT / AGA 2412	1	CMP22	W	108.17	0.00	108.17	97.00	11.17	Y
2/SW2	AGASTAT / AGA 2412	1	CMP22	W	108.17	0.00	108.17	97.00	11.17	Y
2/SW3-1	AGASTAT / AGA 2412	1	CMP22	W	108.17	0.00	108.17	97.00	11.17	Y
2/SW5	AGASTAT / AGA 2412	1	CMP22	W	108.17	0.00	108.17	97.00	11.17	Y
2/SW6-1	AGASTAT / AGA 2412	1	CMP22	W	108.17	0.00	108.17	97.00	11.17	Y
52/CC1X	WHSE / BFD	1	CMP22	W	108.17	0.00	108.17	97.00	11.17	Y
52/CC2X	WHSE / BFD	1	CMP22	W	108.17	0.00	108.17	97.00	11.17	Y
52/CC3X	WHSE / BFD	1	CMP22	W	108.17	0.00	108.17	97.00	11.17	Y

Path Voltage Drop Summary

Generation Date: 03/06/2008 11:01 am

Battery: 22 **Node:** 17 **Circuit:** DP22-11 **Schematic:** B225229

Device ID	Mfgr/Model	Path	Scenario	Time	Node Voltage	Path VD	Device Voltage	Required Voltage	Voltage Delta	Y/N
52/RHR2/X	WHSE / BFD	1	CMP22	W	108.17	0.00	108.17	97.00	11.17	Y

Path Voltage Drop Summary

Generation Date: 03/06/2008 11:01 am

Battery: 22 **Node:** 17 **Circuit:** DP22-11 **Schematic:** B225231

Device ID	Mfgr/Model	Path	Scenario	Time	Node Voltage	Path VD	Device Voltage	Required Voltage	Voltage Delta	Y/N
52/SW1X	WHSE / BFD	1	CMP22	W	108.17	0.00	108.17	97.00	11.17	Y
52/SW2X	WHSE / BFD	1	CMP22	W	108.17	0.00	108.17	97.00	11.17	Y
52/SW3X	WHSE / BFD	1	CMP22	W	108.17	0.00	108.17	97.00	11.17	Y
52/SW4X	WHSE / BFD	1	CMP22	W	108.17	0.00	108.17	97.00	11.17	Y
52/SW5X	WHSE / BFD	1	CMP22	W	108.17	0.00	108.17	97.00	11.17	Y
52/SW6X	WHSE / BFD	1	CMP22	W	108.17	0.00	108.17	97.00	11.17	Y

Path Voltage Drop Summary

Generation Date: 03/06/2008 11:01 am

Battery: 22 **Node:** 17 **Circuit:** DP22-11 **Schematic:** B225233

Device ID	Mfgr/Model	Path	Scenario	Time	Node Voltage	Path VD	Device Voltage	Required Voltage	Voltage Delta	Y/N
RS6/X	WHSE / BFD	1	CMP22	W	108.17	0.00	108.17	97.00	11.17	Y

Path Voltage Drop Summary

Generation Date: 03/06/2008 11:01 am

Battery: 22 **Node:** 17 **Circuit:** DP22-11 **Schematic:** B225234

Device ID	Mfgr/Model	Path	Scenario	Time	Node Voltage	Path VD	Device Voltage	Required Voltage	Voltage Delta	Y/N
1810/X	WHSE / BFD	1	CMP22	W	108.17	0.00	108.17	97.00	11.17	Y

Path Voltage Drop Summary

Generation Date: 03/06/2008 11:01 am

Battery: 22 **Node:** 17 **Circuit:** DP22-12 **Schematic:** 225188

Device ID	Mfgr/Model	Path	Scenario	Time	Node Voltage	Path VD	Device Voltage	Required Voltage	Voltage Delta	Y/N
SOV1629	ASCO / CAT. NO. LB-83146	1	CMP22	W	108.17	0.00	108.17	103.00	5.17	Y
SOV1630	ASCO / CAT. NO. LB-83146	1	CMP22	W	108.17	0.00	108.17	103.00	5.17	Y
SOV1631	ASCO / CAT. NO. LB-83146	1	CMP22	W	108.17	0.00	108.17	103.00	5.17	Y

Path Voltage Drop Summary

Generation Date: 03/06/2008 11:01 am

Battery: 22 **Node:** 17 **Circuit:** DP22-12 **Schematic:** 225209

Device ID	Mfgr/Model	Path	Scenario	Time	Node Voltage	Path VD	Device Voltage	Required Voltage	Voltage Delta	Y/N
SOV1003A	UNKNOWN / UNKNOWN	1	CMP22	W	108.17	0.00	108.17	103.00	5.17	Y
SOV1003B	UNKNOWN / UNKNOWN	1	CMP22	W	108.17	0.00	108.17	103.00	5.17	Y
SOV1609	ASCO / CAT. NO. NP831655V	1	CMP22	W	108.17	0.00	108.17	91.00	17.17	Y
TD-LCV1003A	AGASTAT / UNKNOWN	1	CMP22	W	108.17	0.00	108.17	101.00	7.17	Y
TD-LCV1003B	AGASTAT / UNKNOWN	1	CMP22	W	108.17	0.00	108.17	101.00	7.17	Y

Path Voltage Drop Summary

Generation Date: 03/06/2008 11:01 am

Battery: 22 **Node:** 17 **Circuit:** DP22-12 **Schematic:** B209864

Device ID	Mfgr/Model	Path	Scenario	Time	Node Voltage	Path VD	Device Voltage	Required Voltage	Voltage Delta	Y/N
SOV523	ASCO / CAT. NO. NP8314C28V	1	CMP22	W	108.17	0.00	108.17	91.00	17.17	Y

Path Voltage Drop Summary

Generation Date: 03/06/2008 11:01 am

Battery: 22 **Node:** 17 **Circuit:** DP22-12 **Schematic:** B225205

Device ID	Mfgr/Model	Path	Scenario	Time	Node Voltage	Path VD	Device Voltage	Required Voltage	Voltage Delta	Y/N
SOV018	ASCO / CAT. NO. LB-83146	1	CMP22	W	108.17	0.00	108.17	103.00	5.17	Y
SOV1036A	ASCO / CAT. NO. LB-83146	1	CMP22	W	108.17	0.00	108.17	103.00	5.17	Y
SOV1037A	ASCO / CAT. NO. LB-83146	1	CMP22	W	108.17	0.00	108.17	103.00	5.17	Y
SOV1038A	ASCO / CAT. NO. LB-83146	1	CMP22	W	108.17	0.00	108.17	103.00	5.17	Y
SOV1039A	ASCO / CAT. NO. LB-83146	1	CMP22	W	108.17	0.00	108.17	103.00	5.17	Y
SOV1632	ASCO / CAT. NO. LB-83146	1	CMP22	W	108.17	0.00	108.17	103.00	5.17	Y
SOV1677	ASCO / CAT. NO. LB-83146	1	CMP22	W	108.17	0.00	108.17	103.00	5.17	Y

Path Voltage Drop Summary

Generation Date: 03/06/2008 11:01 am

Battery: 22 **Node:** 17 **Circuit:** DP22-12 **Schematic:** B225207

Device ID	Mfgr/Model	Path	Scenario	Time	Node Voltage	Path VD	Device Voltage	Required Voltage	Voltage Delta	Y/N
SOV1036B	ASCO / CAT. NO. LB-83146	1	CMP22	W	108.17	0.00	108.17	103.00	5.17	Y
SOV1037B	ASCO / CAT. NO. LB-83146	1	CMP22	W	108.17	0.00	108.17	103.00	5.17	Y
SOV1038B	ASCO / CAT. NO. LB-83146	1	CMP22	W	108.17	0.00	108.17	103.00	5.17	Y
SOV1039B	ASCO / CAT. NO. LB-83146	1	CMP22	W	108.17	0.00	108.17	103.00	5.17	Y

Path Voltage Drop Summary

Generation Date: 03/06/2008 11:01 am

Battery: 22 **Node:** 17 **Circuit:** DP22-12 **Schematic:** UNKNOWN

Device ID	Mfgr/Model	Path	Scenario	Time	Node Voltage	Path VD	Device Voltage	Required Voltage	Voltage Delta	Y/N
ANNUN-WASTE CP	UNKNOWN / UNKNOWN ANNUNCIATOR	1	CMP22	W	108.17	0.00	108.17	101.00	7.17	Y

Path Voltage Drop Summary

Generation Date: 03/06/2008 11:01 am

Battery: 22 **Node:** 17 **Circuit:** DP22-13 **Schematic:** 9321-LL-3131 SH 11

Device ID	Mfgr/Model	Path	Scenario	Time	Node Voltage	Path VD	Device Voltage	Required Voltage	Voltage Delta	Y/N
1X/AF3-AFPR3	WHSE / BFD	1	CMP22	W	108.17	0.00	108.17	97.00	11.17	Y
20/AFPR3	ASCO / CAT. NO. NP8316A55V	1	CMP22	W	108.17	0.00	108.17	91.00	17.17	Y

Path Voltage Drop Summary

Generation Date: 03/06/2008 11:01 am

Battery: 22 **Node:** 17 **Circuit:** DP22-13 **Schematic:** 9321-LL-3131 SH 11A

Device ID	Mfgr/Model	Path	Scenario	Time	Node Voltage	Path VD	Device Voltage	Required Voltage	Voltage Delta	Y/N
80X1A/AFPR3	GE / TYPE HGA	1	CMP22	W	108.17	0.00	108.17	101.00	7.17	Y
80X2A/AFPR3	GE / TYPE HGA	1	CMP22	W	108.17	0.00	108.17	101.00	7.17	Y

Path Voltage Drop Summary

Generation Date: 03/06/2008 11:01 am

Battery: 22 **Node:** 17 **Circuit:** DP22-14 **Schematic:** 9321-LL-3135 SH 02

Device ID	Mfgr/Model	Path	Scenario	Time	Node Voltage	Path VD	Device Voltage	Required Voltage	Voltage Delta	Y/N
30/4-TRFOA	UNKNOWN / UNKNOWN	1	CMP22	W	108.17	0.00	108.17	97.00	11.17	Y
30/X1-TRFOA	WHSE / BFD	1	CMP22	W	108.17	0.00	108.17	97.00	11.17	Y
30/X2-TRFOA	WHSE / BFD	1	CMP22	W	108.17	0.00	108.17	97.00	11.17	Y
30/X3-TRFOA	WHSE / BFD	1	CMP22	W	108.17	0.00	108.17	97.00	11.17	Y
30/X4-TRFOA	WHSE / BFD	1	CMP22	W	108.17	0.00	108.17	97.00	11.17	Y
30/X5-TRFOA	WHSE / BFD	1	CMP22	W	108.17	0.00	108.17	97.00	11.17	Y
30/X6-TRFOA	WHSE / BFD	1	CMP22	W	108.17	0.00	108.17	97.00	11.17	Y
30/X7-TRFOA	WHSE / BFD	1	CMP22	W	108.17	0.00	108.17	97.00	11.17	Y
30/X8-TRFOA	WHSE / BFD	1	CMP22	W	108.17	0.00	108.17	97.00	11.17	Y
30FX-TRFOA	UNKNOWN / UNKNOWN	1	CMP22	W	108.17	0.00	108.17	97.00	11.17	Y
30X1-TRFOA	UNKNOWN / UNKNOWN	1	CMP22	W	108.17	0.00	108.17	97.00	11.17	Y
HORN-TRFOA	PANALARM / HORN FOR ANNUNCIATOR	1	CMP22	W	108.17	0.00	108.17	101.00	7.17	Y
M4-TRFOA	PANALARM / FLASHER RELAY, MODEL	1	CMP22	W	108.17	0.00	108.17	101.00	7.17	Y
REACTOR-FIRST OUT ANN	PANALARM / SERIES 10, MODEL 11	1	CMP22	W	108.17	0.00	108.17	94.75	13.42	Y
TURB-FIRST OUT ANN	PANALARM / SERIES 10, MODEL 11	1	CMP22	W	108.17	0.00	108.17	94.75	13.42	Y

Path Voltage Drop Summary

Generation Date: 03/06/2008 11:01 am

Battery: 22 **Node:** 17 **Circuit:** DP22-15 **Schematic:** 311906

Device ID	Mfgr/Model	Path	Scenario	Time	Node Voltage	Path VD	Device Voltage	Required Voltage	Voltage Delta	Y/N
33X/PCV455C-PCV455C	UNKNOWN / UNKNOWN	1	CMP22	W	108.17	0.00	108.17	97.00	11.17	Y
SOV455C	ASCO / CAT. NO. NP8316A55V	1	CMP22	W	108.17	0.00	108.17	91.00	17.17	Y

Path Voltage Drop Summary

Generation Date: 03/06/2008 11:01 am

Battery: 22 **Node:** 17 **Circuit:** DP22-15 **Schematic:** 9321-LL-3131 SH 15A

Device ID	Mfgr/Model	Path	Scenario	Time	Node Voltage	Path VD	Device Voltage	Required Voltage	Voltage Delta	Y/N
20-4-SW CNTL VLVS	ASCO / CAT. NO. NPK8316A74V	1	CMP22	W	108.17	0.00	108.17	91.00	17.17	Y
20-6-SW CNTL VLVS	ASCO / CAT. NO. NP8316A55V	1	CMP22	W	108.17	0.00	108.17	91.00	17.17	Y
20-8-SW CNTL VLVS	ASCO / CAT. NO. 8211D3	1	CMP22	W	108.17	0.00	108.17	103.00	5.17	Y

Path Voltage Drop Summary

Generation Date: 03/06/2008 11:01 am

Battery: 22 **Node:** 17 **Circuit:** DP22-15 **Schematic:** B207581

Device ID	Mfgr/Model	Path	Scenario	Time	Node Voltage	Path VD	Device Voltage	Required Voltage	Voltage Delta	Y/N
SOV1171-TCV1105	ASCO / CAT. NO. NP831655E	1	CMP22	W	108.17	0.00	108.17	91.00	17.17	Y
SOV5005-TCV1105	ASCO / CAT. NO. 8211D3	1	CMP22	W	108.17	0.00	108.17	103.00	5.17	Y

Path Voltage Drop Summary

Generation Date: 03/06/2008 11:01 am

Battery: 22 **Node:** 17 **Circuit:** DP22-15 **Schematic:** B225181

Device ID	Mfgr/Model	Path	Scenario	Time	Node Voltage	Path VD	Device Voltage	Required Voltage	Voltage Delta	Y/N
20-V204B	UNKNOWN / UNKNOWN	1	CMP22	W	108.17	0.00	108.17	103.00	5.17	Y
SOV213	ASCO / CAT. NO. NP8316A55V	1	CMP22	W	108.17	0.00	108.17	91.00	17.17	Y
SOV246	ASCO / CAT. NO. NP831655V	1	CMP22	W	108.17	0.00	108.17	91.00	17.17	Y
SOV261A (2)	ASCO / CAT. NO. NP831655V	1	CMP22	W	108.17	0.00	108.17	91.00	17.17	Y

Path Voltage Drop Summary

Generation Date: 03/06/2008 11:01 am

Battery: 22 **Node:** 17 **Circuit:** DP22-15 **Schematic:** B225182

Device ID	Mfgr/Model	Path	Scenario	Time	Node Voltage	Path VD	Device Voltage	Required Voltage	Voltage Delta	Y/N
S0V261D	ASCO / CAT. NO. NP831655V	1	CMP22	W	108.17	0.00	108.17	91.00	17.17	Y
SOV1870	UNKNOWN / UNKNOWN	1	CMP22	W	108.17	0.00	108.17	103.00	5.17	Y
SOV310	ASCO / CAT. NO. LBX-831614	1	CMP22	W	108.17	0.00	108.17	103.00	5.17	Y

Path Voltage Drop Summary

Generation Date: 03/06/2008 11:01 am

Battery: 22 **Node:** 17 **Circuit:** DP22-15 **Schematic:** B225183

Device ID	Mfgr/Model	Path	Scenario	Time	Node Voltage	Path VD	Device Voltage	Required Voltage	Voltage Delta	Y/N
SOV839C	ASCO / CAT. NO. LBX-831614	1	CMP22	W	108.17	0.00	108.17	103.00	5.17	Y
SOV839D	ASCO / CAT. NO. LBX-831614	1	CMP22	W	108.17	0.00	108.17	103.00	5.17	Y
SOV839G	ASCO / CAT. NO. LBX-831614	1	CMP22	W	108.17	0.00	108.17	103.00	5.17	Y
SOV839H	ASCO / CAT. NO. LBX-831614	1	CMP22	W	108.17	0.00	108.17	103.00	5.17	Y

Path Voltage Drop Summary

Generation Date: 03/06/2008 11:01 am

Battery: 22 **Node:** 17 **Circuit:** DP22-15 **Schematic:** B225184

Device ID	Mfgr/Model	Path	Scenario	Time	Node Voltage	Path VD	Device Voltage	Required Voltage	Voltage Delta	Y/N
SOV553B	ASCO / CAT. NO. LB-83146	1	CMP22	W	108.17	0.00	108.17	103.00	5.17	Y
SOV553D	ASCO / CAT. NO. LB-83146	1	CMP22	W	108.17	0.00	108.17	103.00	5.17	Y
SOV560	ASCO / CAT. NO. LB-83146	1	CMP22	W	108.17	0.00	108.17	103.00	5.17	Y

Path Voltage Drop Summary

Generation Date: 03/06/2008 11:01 am

Battery: 22 **Node:** 17 **Circuit:** DP22-15 **Schematic:** B225185

Device ID	Mfgr/Model	Path	Scenario	Time	Node Voltage	Path VD	Device Voltage	Required Voltage	Voltage Delta	Y/N
SOV890B	ASCO / CAT. NO. LBX-831614	1	CMP22	W	108.17	0.00	108.17	103.00	5.17	Y
SOV890D	ASCO / CAT. NO. LBX-831614	1	CMP22	W	108.17	0.00	108.17	103.00	5.17	Y
SOV891B	ASCO / CAT. NO. LBX-831614	1	CMP22	W	108.17	0.00	108.17	103.00	5.17	Y
SOV891D	ASCO / CAT. NO. LBX-831614	1	CMP22	W	108.17	0.00	108.17	103.00	5.17	Y
SOV896B	ASCO / CAT. NO. LBX-831614	1	CMP22	W	108.17	0.00	108.17	103.00	5.17	Y
SOV896D	ASCO / CAT. NO. NP8316A55V	1	CMP22	W	108.17	0.00	108.17	91.00	17.17	Y

Path Voltage Drop Summary

Generation Date: 03/06/2008 11:01 am

Battery: 22 **Node:** 17 **Circuit:** DP22-15 **Schematic:** B225191

Device ID	Mfgr/Model	Path	Scenario	Time	Node Voltage	Path VD	Device Voltage	Required Voltage	Voltage Delta	Y/N
LCV112B	UNKNOWN / UNKNOWN	1	CMP22	W	108.17	0.00	108.17	103.00	5.17	Y
SOV017	ASCO / CAT. NO. NP8316A55V	1	CMP22	W	108.17	0.00	108.17	91.00	17.17	Y

Path Voltage Drop Summary

Generation Date: 03/06/2008 11:01 am

Battery: 22 **Node:** 17 **Circuit:** DP22-15 **Schematic:** B225192

Device ID	Mfgr/Model	Path	Scenario	Time	Node Voltage	Path VD	Device Voltage	Required Voltage	Voltage Delta	Y/N
SOV149-TCV149	ASCO / CAT. NO. NP8316A55V	1	CMP22	W	108.17	0.00	108.17	91.00	17.17	Y

Path Voltage Drop Summary

Generation Date: 03/06/2008 11:01 am

Battery: 22 **Node:** 17 **Circuit:** DP22-15 **Schematic:** B225193

Device ID	Mfgr/Model	Path	Scenario	Time	Node Voltage	Path VD	Device Voltage	Required Voltage	Voltage Delta	Y/N
LVC459	UNKNOWN / UNKNOWN	1	CMP22	W	108.17	0.00	108.17	103.00	5.17	Y
SOV1276A	ASCO / CAT. NO. NP8316A55V	1	CMP22	W	108.17	0.00	108.17	91.00	17.17	Y

Path Voltage Drop Summary

Generation Date: 03/06/2008 11:01 am

Battery: 22 **Node:** 17 **Circuit:** DP22-15 **Schematic:** B228092

Device ID	Mfgr/Model	Path	Scenario	Time	Node Voltage	Path VD	Device Voltage	Required Voltage	Voltage Delta	Y/N
74/DG21-21 DG TROUB	WHSE / SG	1	CMP22	W	108.17	0.00	108.17	101.00	7.17	Y
74/DG22-22 DG TROUB	WHSE / SG	1	CMP22	W	108.17	0.00	108.17	101.00	7.17	Y
74/DG23-23 DG TROUB	WHSE / SG	1	CMP22	W	108.17	0.00	108.17	101.00	7.17	Y

Path Voltage Drop Summary

Generation Date: 03/06/2008 11:01 am

Battery: 22 **Node:** 17 **Circuit:** DP22-16 **Schematic:** 9321-LL-3130 SH 03

Device ID	Mfgr/Model	Path	Scenario	Time	Node Voltage	Path VD	Device Voltage	Required Voltage	Voltage Delta	Y/N
1/30 HP MOTOR-LLV1	UNKNOWN / 1/30 HP MOTOR,	1	CMP22	W	108.17	0.00	108.17	101.00	7.17	Y
LRB1-LLV1	WHSE / MG-6	1	CMP22	W	108.17	0.00	108.17	101.00	7.17	Y
M/LLV1-LLV1	UNKNOWN / FIELD FOR 1/30 HP	1	CMP22	W	108.17	0.00	108.17	101.00	7.17	Y
TD/LRB1	AGASTAT / AGA 2412	1	CMP22	W	108.17	0.00	108.17	97.00	11.17	Y
TD1-LRB1	AGASTAT / 7000 SERIES	1	CMP22	W	108.17	0.00	108.17	101.00	7.17	Y
TD1X/LRB-1	UNKNOWN / UNKNOWN	1	CMP22	W	108.17	0.00	108.17	97.00	11.17	Y
TD2X/LRB-1	SCCA / MODEL 1080811, TIME	1	CMP22	W	108.17	0.00	108.17	101.00	7.17	Y
TDX/LRB1	WHSE / SG	1	CMP22	W	108.17	0.00	108.17	101.00	7.17	Y

Path Voltage Drop Summary

Generation Date: 03/06/2008 11:01 am

Battery: 22 **Node:** 17 **Circuit:** DP22-17 **Schematic:** 9321-LL-3130 SH 06

Device ID	Mfgr/Model	Path	Scenario	Time	Node Voltage	Path VD	Device Voltage	Required Voltage	Voltage Delta	Y/N
40-GEN BU LO	UNKNOWN / UNKNOWN	1	CMP22	W	108.17	0.00	108.17	97.00	11.17	Y
40X-GEN BU LO	WHSE / SG	1	CMP22	W	108.17	0.00	108.17	101.00	7.17	Y
46/1-GEN BU LO	UNKNOWN / UNKNOWN	1	CMP22	W	108.17	0.00	108.17	101.00	7.17	Y
60-GEN BU LO	UNKNOWN / UNKNOWN	1	CMP22	W	108.17	0.00	108.17	97.00	11.17	Y
62/BU	UNKNOWN / UNKNOWN	1	CMP22	W	108.17	0.00	108.17	97.00	11.17	Y
62BU1/AUX	AGASTAT / TYPE TR-5	1	CMP22	W	108.17	0.00	108.17	101.00	7.17	Y
63X/BU	UNKNOWN / UNKNOWN	1	CMP22	W	108.17	0.00	108.17	97.00	11.17	Y
81BU/1	UNKNOWN / UNKNOWN	1	CMP22	W	108.17	0.00	108.17	97.00	11.17	Y
81BU/2	UNKNOWN / UNKNOWN	1	CMP22	W	108.17	0.00	108.17	97.00	11.17	Y
81BU/62X	AGASTAT / UNKNOWN	1	CMP22	W	108.17	0.00	108.17	101.00	7.17	Y
86/BU	WHSE / TYPE WL	1	CMP22	W	108.17	0.00	108.17	71.00	37.17	Y
86X-1/BU	UNKNOWN / UNKNOWN	1	CMP22	W	108.17	0.00	108.17	97.00	11.17	Y
TR 1-GEN BU LO	UNKNOWN / UNKNOWN	1	CMP22	W	108.17	0.00	108.17	97.00	11.17	Y

Path Voltage Drop Summary

Generation Date: 03/06/2008 11:01 am

Battery: 22 **Node:** 17 **Circuit:** DP22-17 **Schematic:** A207325

Device ID	Mfgr/Model	Path	Scenario	Time	Node Voltage	Path VD	Device Voltage	Required Voltage	Voltage Delta	Y/N
86X/BU	WHSE / TYPE WL	1	CMP22	W	108.17	0.00	108.17	71.00	37.17	Y

Path Voltage Drop Summary

Generation Date: 03/06/2008 11:01 am

Battery: 22 **Node:** 17 **Circuit:** DP22-18 **Schematic:** 199B23

Device ID	Mfgr/Model	Path	Scenario	Time	Node Voltage	Path VD	Device Voltage	Required Voltage	Voltage Delta	Y/N
717-FW-ISOL-B	WHSE / BFD	1	CMP22	W	108.17	0.00	108.17	97.00	11.17	Y
F/11X	WHSE / BFD	1	CMP22	W	108.17	0.00	108.17	97.00	11.17	Y
F/12X	WHSE / BFD	1	CMP22	W	108.17	0.00	108.17	97.00	11.17	Y
F/13X	WHSE / BFD	1	CMP22	W	108.17	0.00	108.17	97.00	11.17	Y
F/14X	WHSE / BFD	1	CMP22	W	108.17	0.00	108.17	97.00	11.17	Y
F/15X	WHSE / BFD	1	CMP22	W	108.17	0.00	108.17	97.00	11.17	Y
F/16X	WHSE / BFD	1	CMP22	W	108.17	0.00	108.17	97.00	11.17	Y

Path Voltage Drop Summary

Generation Date: 03/06/2008 11:01 am

Battery: 22 **Node:** 17 **Circuit:** DP22-18 **Schematic:** 225018

Device ID	Mfgr/Model	Path	Scenario	Time	Node Voltage	Path VD	Device Voltage	Required Voltage	Voltage Delta	Y/N
2/SI/D2-B SI ACT	AGASTAT / AGA 2412	1	CMP22	W	108.17	0.00	108.17	97.00	11.17	Y
74X10-B SI ACT	WHSE / BFD	1	CMP22	W	108.17	0.00	108.17	97.00	11.17	Y
SI/20X-B SI ACT	WHSE / BFD	1	CMP22	W	108.17	0.00	108.17	97.00	11.17	Y
SI/21X-B SI ACT	WHSE / BFD	1	CMP22	W	108.17	0.00	108.17	97.00	11.17	Y
SI/22X-B SI ACT	WHSE / BFD	1	CMP22	W	108.17	0.00	108.17	97.00	11.17	Y
SI/23X-B SI ACT	WHSE / BFD	1	CMP22	W	108.17	0.00	108.17	97.00	11.17	Y
SI/24X-B SI ACT	WHSE / BFD	1	CMP22	W	108.17	0.00	108.17	97.00	11.17	Y
SI/25AX-B SI ACT	WHSE / BFD	1	CMP22	W	108.17	0.00	108.17	97.00	11.17	Y
SI/25X-B SI ACT	WHSE / BFD	1	CMP22	W	108.17	0.00	108.17	97.00	11.17	Y
SI/26X-B SI ACT	WHSE / BFD	1	CMP22	W	108.17	0.00	108.17	97.00	11.17	Y
SI/27X-B SI ACT	WHSE / BFD	1	CMP22	W	108.17	0.00	108.17	97.00	11.17	Y
SI/28X-B SI ACT	WHSE / BFD	1	CMP22	W	108.17	0.00	108.17	97.00	11.17	Y
SIA/2-K1-B SI ACT	ELECTROSW / ER-LOR, K1 COIL	1	CMP22	W	108.17	0.00	108.17	101.00	7.17	Y
SIA/2-R-B SI ACT	ELECTROSW / ER-LOR, R COIL	1	CMP22	W	108.17	0.00	108.17	101.00	7.17	Y
SIA/2-T-B SI ACT	ELECTROSW / ER-LOR, T COIL	1	CMP22	W	108.17	0.00	108.17	91.00	17.17	Y
SIB2-B SI ACT	WHSE / BFD	1	CMP22	W	108.17	0.00	108.17	97.00	11.17	Y
SIM/2-K1-B SI ACT	ELECTROSW / ER-LOR, K1 COIL	1	CMP22	W	108.17	0.00	108.17	101.00	7.17	Y
SIM/2-R-B SI ACT	ELECTROSW / ER-LOR, R COIL	1	CMP22	W	108.17	0.00	108.17	101.00	7.17	Y
SIM/2-T-B SI ACT	ELECTROSW / ER-LOR, T COIL	1	CMP22	W	108.17	0.00	108.17	91.00	17.17	Y

Path Voltage Drop Summary

Generation Date: 03/06/2008 11:01 am

Battery: 22 **Node:** 17 **Circuit:** DP22-18 **Schematic:** 225026

Device ID	Mfgr/Model	Path	Scenario	Time	Node Voltage	Path VD	Device Voltage	Required Voltage	Voltage Delta	Y/N
AS2	WHSE / BFD	1	CMP22	W	108.17	0.00	108.17	97.00	11.17	Y
CA2-1X	WHSE / BFD	1	CMP22	W	108.17	0.00	108.17	97.00	11.17	Y
CA2-2X	WHSE / BFD	1	CMP22	W	108.17	0.00	108.17	97.00	11.17	Y
CA2-3X	WHSE / BFD	1	CMP22	W	108.17	0.00	108.17	97.00	11.17	Y
CA2-4X	WHSE / BFD	1	CMP22	W	108.17	0.00	108.17	97.00	11.17	Y
CA2-K1	ELECTROSW / ER-LOR, K1 COIL	1	CMP22	W	108.17	0.00	108.17	101.00	7.17	Y
CA2-R	ELECTROSW / ER-LOR, R COIL	1	CMP22	W	108.17	0.00	108.17	101.00	7.17	Y
CA2-T	ELECTROSW / ER-LOR, T COIL	1	CMP22	W	108.17	0.00	108.17	91.00	17.17	Y
CB2-1X	WHSE / BFD	1	CMP22	W	108.17	0.00	108.17	97.00	11.17	Y
CB2-K1	ELECTROSW / ER-LOR, K1 COIL	1	CMP22	W	108.17	0.00	108.17	101.00	7.17	Y
CB2-R	ELECTROSW / ER-LOR, R COIL	1	CMP22	W	108.17	0.00	108.17	101.00	7.17	Y
CB2-T	ELECTROSW / ER-LOR, T COIL	1	CMP22	W	108.17	0.00	108.17	91.00	17.17	Y
S2-1X	WHSE / BFD	1	CMP22	W	108.17	0.00	108.17	97.00	11.17	Y
S2-K1	ELECTROSW / ER-LOR, K1 COIL	1	CMP22	W	108.17	0.00	108.17	101.00	7.17	Y
S2-R	ELECTROSW / ER-LOR, R COIL	1	CMP22	W	108.17	0.00	108.17	101.00	7.17	Y
S2-T	ELECTROSW / ER-LOR, T COIL	1	CMP22	W	108.17	0.00	108.17	91.00	17.17	Y
V2-K1	ELECTROSW / ER-LOR, K1 COIL	1	CMP22	W	108.17	0.00	108.17	101.00	7.17	Y
V2-R	ELECTROSW / ER-LOR, R COIL	1	CMP22	W	108.17	0.00	108.17	101.00	7.17	Y
V2-T	ELECTROSW / ER-LOR, T COIL	1	CMP22	W	108.17	0.00	108.17	91.00	17.17	Y

Path Voltage Drop Summary

Generation Date: 03/06/2008 11:01 am

Battery: 22 **Node:** 17 **Circuit:** DP22-18 **Schematic:** 9321-LL-3117 SH 02

Device ID	Mfgr/Model	Path	Scenario	Time	Node Voltage	Path VD	Device Voltage	Required Voltage	Voltage Delta	Y/N
27/2/2A-ICS-SG21B2A-U26A	WHSE / CV	1	CMP22	W	108.17	0.00	108.17	101.00	7.17	Y
27/2/5A-ICS-SG21B5A-U14A	WHSE / CV	1	CMP22	W	108.17	0.00	108.17	101.00	7.17	Y
27/2A/X11-SG21B2A-U26A	WHSE / TYPE SG, 12V COIL, W	1	CMP22	W	108.17	0.00	108.17	101.00	7.17	Y
27/2A/X12-SG21B2A-U26A	WHSE / BFD	1	CMP22	W	108.17	0.00	108.17	97.00	11.17	Y
27/2A/X13	WHSE / BFD	1	CMP22	W	108.17	0.00	108.17	97.00	11.17	Y
27/5A/X11-SG21B5A-U14A	WHSE / TYPE SG, 12V COIL, W	1	CMP22	W	108.17	0.00	108.17	101.00	7.17	Y
27/5A/X12-SG21B5A-U14A	WHSE / BFD	1	CMP22	W	108.17	0.00	108.17	97.00	11.17	Y
27/5A/X13	WHSE / BFD	1	CMP22	W	108.17	0.00	108.17	97.00	11.17	Y

Path Voltage Drop Summary

Generation Date: 03/06/2008 11:01 am

Battery: 22 **Node:** 17 **Circuit:** DP22-18 **Schematic:** 9321-LL-3117 SH 22

Device ID	Mfgr/Model	Path	Scenario	Time	Node Voltage	Path VD	Device Voltage	Required Voltage	Voltage Delta	Y/N
27-61-ICS	WHSE / CV	1	CMP22	W	108.17	0.00	108.17	101.00	7.17	Y
27-61/X1	WHSE / TYPE SG, 12V COIL, W	1	CMP22	W	108.17	0.00	108.17	101.00	7.17	Y
27-61/X2	WHSE / BFD	1	CMP22	W	108.17	0.00	108.17	97.00	11.17	Y
27-61/X3	WHSE / BFD	1	CMP22	W	108.17	0.00	108.17	97.00	11.17	Y
27-62-ICS	WHSE / CV	1	CMP22	W	108.17	0.00	108.17	101.00	7.17	Y
27-62/X1	WHSE / TYPE SG, 12V COIL, W	1	CMP22	W	108.17	0.00	108.17	101.00	7.17	Y
27-62/X2	WHSE / BFD	1	CMP22	W	108.17	0.00	108.17	97.00	11.17	Y
27-62/X3	WHSE / BFD	1	CMP22	W	108.17	0.00	108.17	97.00	11.17	Y
27-63-ICS	WHSE / CV	1	CMP22	W	108.17	0.00	108.17	101.00	7.17	Y
27-63/X1	WHSE / TYPE SG, 12V COIL, W	1	CMP22	W	108.17	0.00	108.17	101.00	7.17	Y
27-63/X2	WHSE / BFD	1	CMP22	W	108.17	0.00	108.17	97.00	11.17	Y
27-63/X3	WHSE / BFD	1	CMP22	W	108.17	0.00	108.17	97.00	11.17	Y

Path Voltage Drop Summary

Generation Date: 03/06/2008 11:01 am

Battery: 22 **Node:** 17 **Circuit:** DP22-18 **Schematic:** 9321-LL-3118 SH 02

Device ID	Mfgr/Model	Path	Scenario	Time	Node Voltage	Path VD	Device Voltage	Required Voltage	Voltage Delta	Y/N
2/11/11X-SG22B6A/3A	WHSE / BFD	1	CMP22	W	108.17	0.00	108.17	97.00	11.17	Y
2/12-SG22B6A/3A	AGASTAT / AGA 2414	1	CMP22	W	108.17	0.00	108.17	97.00	11.17	Y
2/13-SG22B6A/3A	AGASTAT / AGA 2412	1	CMP22	W	108.17	0.00	108.17	97.00	11.17	Y
27/1/3A-ICS-SG22B3A-U1A	WHSE / CV	1	CMP22	W	108.17	0.00	108.17	101.00	7.17	Y
27/1/6A-ICS-SG22B6A-U13A	WHSE / CV	1	CMP22	W	108.17	0.00	108.17	101.00	7.17	Y
27/3A/X1-SG22B3A-U1A	WHSE / TYPE SG, 12V COIL, W	1	CMP22	W	108.17	0.00	108.17	101.00	7.17	Y
27/3A/X2-SG22B3A-U1A	WHSE / BFD	1	CMP22	W	108.17	0.00	108.17	97.00	11.17	Y
27/3A/X3-SG22B3A-U1A	WHSE / BFD	1	CMP22	W	108.17	0.00	108.17	97.00	11.17	Y
27/3A/X4-SG22B3A-U1A	WHSE / BFD	1	CMP22	W	108.17	0.00	108.17	97.00	11.17	Y
27/6A/X1-SG22B6A-U13A	WHSE / TYPE SG, 12V COIL, W	1	CMP22	W	108.17	0.00	108.17	101.00	7.17	Y
27/6A/X2-SG22B6A-U13A	WHSE / BFD	1	CMP22	W	108.17	0.00	108.17	97.00	11.17	Y
27/6A/X3-SG22B6A-U13A	WHSE / BFD	1	CMP22	W	108.17	0.00	108.17	97.00	11.17	Y
27/6A/X4-SG22B6A-U13A	WHSE / BFD	1	CMP22	W	108.17	0.00	108.17	97.00	11.17	Y
3/11-SG22B6A/3A	WHSE / BFD	1	CMP22	W	108.17	0.00	108.17	97.00	11.17	Y
3/12-SG22B6A/3A	WHSE / BFD	1	CMP22	W	108.17	0.00	108.17	97.00	11.17	Y
3/13-SG22B6A/3A	WHSE / BFD	1	CMP22	W	108.17	0.00	108.17	97.00	11.17	Y
3/13A-SG22B6A/3A	WHSE / BFD	1	CMP22	W	108.17	0.00	108.17	97.00	11.17	Y
3/14-SG22B6A/3A	WHSE / BFD	1	CMP22	W	108.17	0.00	108.17	97.00	11.17	Y
3/14A-SG22B6A/3A	WHSE / BFD	1	CMP22	W	108.17	0.00	108.17	97.00	11.17	Y
3/15-SG22B6A/3A	WHSE / BFD	1	CMP22	W	108.17	0.00	108.17	97.00	11.17	Y
5/12-SG22B6A/3A	WHSE / BFD	1	CMP22	W	108.17	0.00	108.17	97.00	11.17	Y
5/13-SG22B6A/3A	WHSE / BFD	1	CMP22	W	108.17	0.00	108.17	97.00	11.17	Y
86/3A/O-SG22B3A-U1A	UNKNOWN / UNKNOWN	1	CMP22	W	108.17	0.00	108.17	97.00	11.17	Y
86/3A/R-SG22B3A-U1A	UNKNOWN / UNKNOWN	1	CMP22	W	108.17	0.00	108.17	97.00	11.17	Y
86/6A/O-SG22B6A-U13A	UNKNOWN / UNKNOWN	1	CMP22	W	108.17	0.00	108.17	97.00	11.17	Y
86/6A/R-SG22B6A-U13A	UNKNOWN / UNKNOWN	1	CMP22	W	108.17	0.00	108.17	97.00	11.17	Y

Path Voltage Drop Summary

Generation Date: 03/06/2008 11:01 am

Battery: 22 **Node:** 17 **Circuit:** DP22-18 **Schematic:** 9321-LL-3118 SH 20

Device ID	Mfgr/Model	Path	Scenario	Time	Node Voltage	Path VD	Device Voltage	Required Voltage	Voltage Delta	Y/N
1X/BFPT2-ABFP 21/23	WHSE / BFD	1	CMP22	W	108.17	0.00	108.17	97.00	11.17	Y
71/1X-ABFP 21/23	WHSE / BFD	1	CMP22	W	108.17	0.00	108.17	97.00	11.17	Y
71/2X-ABFP 21/23	WHSE / BFD	1	CMP22	W	108.17	0.00	108.17	97.00	11.17	Y
71/3X-ABFP 21/23	WHSE / BFD	1	CMP22	W	108.17	0.00	108.17	97.00	11.17	Y
71/4X-ABFP 21/23	WHSE / BFD	1	CMP22	W	108.17	0.00	108.17	97.00	11.17	Y
BFP2-ABFP 21/23	WHSE / BFD	1	CMP22	W	108.17	0.00	108.17	97.00	11.17	Y
BFPB-ABFP 21/23	WHSE / BFD	1	CMP22	W	108.17	0.00	108.17	97.00	11.17	Y
BFPB/2-ABFP 21/23	WHSE / BFD	1	CMP22	W	108.17	0.00	108.17	97.00	11.17	Y

Path Voltage Drop Summary

Generation Date: 03/06/2008 11:01 am

Battery: 22 **Node:** 17 **Circuit:** DP22-18 **Schematic:** 9321-LL-3118 SH 20A

Device ID	Mfgr/Model	Path	Scenario	Time	Node Voltage	Path VD	Device Voltage	Required Voltage	Voltage Delta	Y/N
R1-ABFP 21/23	WHSE / BFD	1	CMP22	W	108.17	0.00	108.17	97.00	11.17	Y

Path Voltage Drop Summary

Generation Date: 03/06/2008 11:01 am

Battery: 22 **Node:** 17 **Circuit:** DP22-18 **Schematic:** 9321-LL-3131 SH 21

Device ID	Mfgr/Model	Path	Scenario	Time	Node Voltage	Path VD	Device Voltage	Required Voltage	Voltage Delta	Y/N
20/21-2	ASCO / CAT. NO. WJNP831666V	1	CMP22	W	108.17	0.00	108.17	91.00	17.17	Y
20/21-4	ASCO / CAT. NO. WJNP8316E34	1	CMP22	W	108.17	0.00	108.17	91.00	17.17	Y
20/22-2	ASCO / CAT. NO. WJNP831666V	1	CMP22	W	108.17	0.00	108.17	91.00	17.17	Y
20/22-4	ASCO / CAT. NO. WJNP8316E34	1	CMP22	W	108.17	0.00	108.17	91.00	17.17	Y
20/23-2	ASCO / CAT. NO. WJNP831666V	1	CMP22	W	108.17	0.00	108.17	91.00	17.17	Y
20/23-4	ASCO / CAT. NO. WJNP8316E34	1	CMP22	W	108.17	0.00	108.17	91.00	17.17	Y
20/24-2	ASCO / CAT. NO. WJNP831666V	1	CMP22	W	108.17	0.00	108.17	91.00	17.17	Y
20/24-4	ASCO / CAT. NO. WJNP8316E34	1	CMP22	W	108.17	0.00	108.17	91.00	17.17	Y
74X8	UNKNOWN / UNKNOWN	1	CMP22	W	108.17	0.00	108.17	97.00	11.17	Y

Path Voltage Drop Summary

Generation Date: 03/06/2008 11:01 am

Battery: 22 **Node:** 17 **Circuit:** DP22-18 **Schematic:** A241685

Device ID	Mfgr/Model	Path	Scenario	Time	Node Voltage	Path VD	Device Voltage	Required Voltage	Voltage Delta	Y/N
2/TD2/SL2-MS ISOL B	AGASTAT / 7000 SERIES	1	CMP22	W	108.17	0.00	108.17	101.00	7.17	Y
74X2	WHSE / BFD	1	CMP22	W	108.17	0.00	108.17	97.00	11.17	Y
74X4	WHSE / BFD	1	CMP22	W	108.17	0.00	108.17	97.00	11.17	Y
74X6	WHSE / BFD	1	CMP22	W	108.17	0.00	108.17	97.00	11.17	Y
MS11-MS ISOL B	WHSE / BFD	1	CMP22	W	108.17	0.00	108.17	97.00	11.17	Y
MS12-MS ISOL B	WHSE / BFD	1	CMP22	W	108.17	0.00	108.17	97.00	11.17	Y
MS13-MS ISOL B	WHSE / BFD	1	CMP22	W	108.17	0.00	108.17	97.00	11.17	Y
MS14-MS ISOL B	WHSE / BFD	1	CMP22	W	108.17	0.00	108.17	97.00	11.17	Y
SL2	WHSE / BFD	1	CMP22	W	108.17	0.00	108.17	97.00	11.17	Y
TR2-MS ISOL B	WHSE / BFD	1	CMP22	W	108.17	0.00	108.17	97.00	11.17	Y
TR2-X-MS ISOL B	WHSE / BFD	1	CMP22	W	108.17	0.00	108.17	97.00	11.17	Y

Path Voltage Drop Summary

Generation Date: 03/06/2008 11:01 am

Battery: 22 **Node:** 17 **Circuit:** DP22-19 **Schematic:** 9321-LL-3130 SH 02B

Device ID	Mfgr/Model	Path	Scenario	Time	Node Voltage	Path VD	Device Voltage	Required Voltage	Voltage Delta	Y/N
20/ASB-T/G A-S TRIP	UNKNOWN / UNKNOWN	1	CMP22	W	108.17	0.00	108.17	103.00	5.17	Y
63X1/AST3-T/G A-S TRIP	WHSE / MG-6	1	CMP22	W	108.17	0.00	108.17	101.00	7.17	Y
63X2/AST3-T/G A-S TRIP	WHSE / MG-6	1	CMP22	W	108.17	0.00	108.17	101.00	7.17	Y
F15X/1-T/G A-S TRIP	WHSE / BFD	1	CMP22	W	108.17	0.00	108.17	97.00	11.17	Y

Path Voltage Drop Summary

Generation Date: 03/06/2008 11:01 am

Battery: 22 **Node:** 17 **Circuit:** DP22-19 **Schematic:** A207325

Device ID	Mfgr/Model	Path	Scenario	Time	Node Voltage	Path VD	Device Voltage	Required Voltage	Voltage Delta	Y/N
20/DV1B	ASCO / CAT. NO. FT8316E36	1	CMP22	W	108.17	0.00	108.17	103.00	5.17	Y
20/DV2B	ASCO / CAT. NO. FT8316E36	1	CMP22	W	108.17	0.00	108.17	103.00	5.17	Y
20/DV3B	ASCO / CAT. NO. FT8316E36	1	CMP22	W	108.17	0.00	108.17	103.00	5.17	Y
20/DV4B	ASCO / CAT. NO. FT8316E36	1	CMP22	W	108.17	0.00	108.17	103.00	5.17	Y
20/DV5B	ASCO / CAT. NO. FT8316E36	1	CMP22	W	108.17	0.00	108.17	103.00	5.17	Y
20/DV6B	ASCO / CAT. NO. FT8316E36	1	CMP22	W	108.17	0.00	108.17	103.00	5.17	Y
AST/X-LP STM DMPII	WHSE / BFD	1	CMP22	W	108.17	0.00	108.17	97.00	11.17	Y

Path Voltage Drop Summary

Generation Date: 03/06/2008 11:01 am

Battery: 22 **Node:** 17 **Circuit:** DP22-20 **Schematic:** 307670

Device ID	Mfgr/Model	Path	Scenario	Time	Node Voltage	Path VD	Device Voltage	Required Voltage	Voltage Delta	Y/N
74/22-TB OS TRIP B	UNKNOWN / UNKNOWN	1	CMP22	W	108.17	0.00	108.17	97.00	11.17	Y

Path Voltage Drop Summary

Generation Date: 03/06/2008 11:01 am

Battery: 22 **Node:** 17 **Circuit:** DP22-20 **Schematic:** A236330

Device ID	Mfgr/Model	Path	Scenario	Time	Node Voltage	Path VD	Device Voltage	Required Voltage	Voltage Delta	Y/N
20/GLLB	UNKNOWN / UNKNOWN	1	CMP22	W	108.17	0.00	108.17	103.00	5.17	Y
20/GLRB	UNKNOWN / UNKNOWN	1	CMP22	W	108.17	0.00	108.17	103.00	5.17	Y
20/GULB	UNKNOWN / UNKNOWN	1	CMP22	W	108.17	0.00	108.17	103.00	5.17	Y
20/GURB	UNKNOWN / UNKNOWN	1	CMP22	W	108.17	0.00	108.17	103.00	5.17	Y
20/SLLB	UNKNOWN / UNKNOWN	1	CMP22	W	108.17	0.00	108.17	103.00	5.17	Y
20/SLRB	UNKNOWN / UNKNOWN	1	CMP22	W	108.17	0.00	108.17	103.00	5.17	Y
20/SULB	UNKNOWN / UNKNOWN	1	CMP22	W	108.17	0.00	108.17	103.00	5.17	Y
20/SURB	UNKNOWN / UNKNOWN	1	CMP22	W	108.17	0.00	108.17	103.00	5.17	Y
20X/GLLB	UNKNOWN / UNKNOWN	1	CMP22	W	108.17	0.00	108.17	97.00	11.17	Y
20X/GLRB	UNKNOWN / UNKNOWN	1	CMP22	W	108.17	0.00	108.17	97.00	11.17	Y
20X/GULB	UNKNOWN / UNKNOWN	1	CMP22	W	108.17	0.00	108.17	97.00	11.17	Y
20X/GURB	UNKNOWN / UNKNOWN	1	CMP22	W	108.17	0.00	108.17	97.00	11.17	Y
20X/SLLB	UNKNOWN / UNKNOWN	1	CMP22	W	108.17	0.00	108.17	97.00	11.17	Y
20X/SLRB	UNKNOWN / UNKNOWN	1	CMP22	W	108.17	0.00	108.17	97.00	11.17	Y
20X/SULB	UNKNOWN / UNKNOWN	1	CMP22	W	108.17	0.00	108.17	97.00	11.17	Y
20X/SURB	UNKNOWN / UNKNOWN	1	CMP22	W	108.17	0.00	108.17	97.00	11.17	Y
LTB1-TB OS TRIP B	UNKNOWN / UNKNOWN	1	CMP22	W	108.17	0.00	108.17	97.00	11.17	Y
LTB2-TB OS TRIP B	UNKNOWN / UNKNOWN	1	CMP22	W	108.17	0.00	108.17	97.00	11.17	Y
R/ROP2	UNKNOWN / UNKNOWN	1	CMP22	W	108.17	0.00	108.17	97.00	11.17	Y
VB1-TB OS TRIP B	UNKNOWN / UNKNOWN W/ DIODE IN	1	CMP22	W	108.17	0.00	108.17	97.00	11.17	Y
VB2-TB OS TRIP B	UNKNOWN / UNKNOWN W/ DIODE IN	1	CMP22	W	108.17	0.00	108.17	97.00	11.17	Y
VB3-TB OS TRIP B	UNKNOWN / UNKNOWN W/ DIODE IN	1	CMP22	W	108.17	0.00	108.17	97.00	11.17	Y
VB4-TB OS TRIP B	WHSE / TYPE ARD4S	1	CMP22	W	108.17	0.00	108.17	97.00	11.17	Y
VTB1-TB OS TRIP B	UNKNOWN / UNKNOWN	1	CMP22	W	108.17	0.00	108.17	97.00	11.17	Y
VTB2-TB OS TRIP B	UNKNOWN / UNKNOWN	1	CMP22	W	108.17	0.00	108.17	97.00	11.17	Y
VTB3-TB OS TRIP B	SIEMENS / CODE 82E TYPE 3TH4	1	CMP22	W	108.17	0.00	108.17	101.00	7.17	Y

Path Voltage Drop Summary

Generation Date: 03/06/2008 11:01 am

Battery: 22 **Node:** 18 **Circuit:** DP22-06 **Schematic:** 9321-LL-3131 SH 25

Device ID	Mfgr/Model	Path	Scenario	Time	Node Voltage	Path VD	Device Voltage	Required Voltage	Voltage Delta	Y/N
20/1-CRMIV-B	ASCO / CAT. NO. 206-381-2RV	1	CMP22	W	106.39	0.00	106.39	91.00	15.39	Y
20/2-CRMIV-B	ASCO / CAT. NO. 206-381-2RV	1	CMP22	W	106.39	0.00	106.39	91.00	15.39	Y
20/3-CRMIV-B	ASCO / CAT. NO. 206-381-2RV	1	CMP22	W	106.39	0.00	106.39	91.00	15.39	Y
20/4-CRMIV-B	ASCO / CAT. NO. 206-381-2RV	1	CMP22	W	106.39	0.00	106.39	91.00	15.39	Y
RM/BRR-CRMIV-B	UNKNOWN / UNKNOWN	1	CMP22	W	106.39	0.00	106.39	97.00	9.39	Y

Path Voltage Drop Summary

Generation Date: 03/06/2008 11:01 am

Battery: 22 **Node:** 18 **Circuit:** DP22-06 **Schematic:** 9321-LL-3601 SH 03

Device ID	Mfgr/Model	Path	Scenario	Time	Node Voltage	Path VD	Device Voltage	Required Voltage	Voltage Delta	Y/N
SOV417L-C	ASCO / CAT. NO. 206-381-6RG	1	CMP22	W	106.39	0.00	106.39	91.00	15.39	Y
SOV417L-D	ASCO / CAT. NO. 206-381-6RF	1	CMP22	W	106.39	0.00	106.39	91.00	15.39	Y
SOV427L-C	ASCO / CAT. NO. 206-381-6RG	1	CMP22	W	106.39	0.00	106.39	91.00	15.39	Y
SOV427L-D	ASCO / CAT. NO. 206-381-6RF	1	CMP22	W	106.39	0.00	106.39	91.00	15.39	Y
SOV437L-C	ASCO / CAT. NO. 206-381-6RG	1	CMP22	W	106.39	0.00	106.39	91.00	15.39	Y
SOV437L-D	ASCO / CAT. NO. 206-381-6RF	1	CMP22	W	106.39	0.00	106.39	91.00	15.39	Y
SOV447L-C	ASCO / CAT. NO. 206-381-6RG	1	CMP22	W	106.39	0.00	106.39	91.00	15.39	Y
SOV447L-D	ASCO / CAT. NO. 206-381-6RF	1	CMP22	W	106.39	0.00	106.39	91.00	15.39	Y

Path Voltage Drop Summary

Generation Date: 03/06/2008 11:01 am

Battery: 22 **Node:** 18 **Circuit:** DP22-06 **Schematic:** A208425

Device ID	Mfgr/Model	Path	Scenario	Time	Node Voltage	Path VD	Device Voltage	Required Voltage	Voltage Delta	Y/N
796BRR-V796	WHSE / BFD	1	CMP22	W	106.39	0.00	106.39	97.00	9.39	Y
SOV796	ASCO / CAT. NO. NPK831654V	1	CMP22	W	106.39	0.00	106.39	91.00	15.39	Y

Path Voltage Drop Summary

Generation Date: 03/06/2008 11:01 am

Battery: 22 **Node:** 18 **Circuit:** DP22-06 **Schematic:** A209515

Device ID	Mfgr/Model	Path	Scenario	Time	Node Voltage	Path VD	Device Voltage	Required Voltage	Voltage Delta	Y/N
20/5-SGI2	ASCO / CAT. NO. NPK8316A54V	1	CMP22	W	106.39	0.00	106.39	91.00	15.39	Y
20/6-SGI2	ASCO / CAT. NO. NPK8316A54V	1	CMP22	W	106.39	0.00	106.39	91.00	15.39	Y
20/7-SGI2	ASCO / CAT. NO. NPK8316A54V	1	CMP22	W	106.39	0.00	106.39	91.00	15.39	Y
20/8-SGI2	ASCO / CAT. NO. NPK8316A54V	1	CMP22	W	106.39	0.00	106.39	91.00	15.39	Y
SG2X-SGI2	UNKNOWN / UNKNOWN	1	CMP22	W	106.39	0.00	106.39	97.00	9.39	Y

Path Voltage Drop Summary

Generation Date: 03/06/2008 11:01 am

Battery: 22 **Node:** 18 **Circuit:** DP22-06 **Schematic:** B209524

Device ID	Mfgr/Model	Path	Scenario	Time	Node Voltage	Path VD	Device Voltage	Required Voltage	Voltage Delta	Y/N
956BRR-V956B	WHSE / BFD	1	CMP22	W	106.39	0.00	106.39	97.00	9.39	Y
SOV956B	ASCO / CAT. NO. NP8314C28V	1	CMP22	W	106.39	0.00	106.39	91.00	15.39	Y

Path Voltage Drop Summary

Generation Date: 03/06/2008 11:01 am

Battery: 22 **Node:** 18 **Circuit:** DP22-06 **Schematic:** B209525

Device ID	Mfgr/Model	Path	Scenario	Time	Node Voltage	Path VD	Device Voltage	Required Voltage	Voltage Delta	Y/N
SOV956D	ASCO / CAT. NO. NP8314C28V	1	CMP22	W	106.39	0.00	106.39	91.00	15.39	Y

Path Voltage Drop Summary

Generation Date: 03/06/2008 11:01 am

Battery: 22 **Node:** 18 **Circuit:** DP22-06 **Schematic:** B209526

Device ID	Mfgr/Model	Path	Scenario	Time	Node Voltage	Path VD	Device Voltage	Required Voltage	Voltage Delta	Y/N
956HBRR-V956H	WHSE / BFD	1	CMP22	W	106.39	0.00	106.39	97.00	9.39	Y
SOV956H	ASCO / CAT. NO.206-381-4RVU	1	CMP22	W	106.39	0.00	106.39	91.00	15.39	Y

Path Voltage Drop Summary

Generation Date: 03/06/2008 11:01 am

Battery: 22 **Node:** 18 **Circuit:** DP22-06 **Schematic:** B225206

Device ID	Mfgr/Model	Path	Scenario	Time	Node Voltage	Path VD	Device Voltage	Required Voltage	Voltage Delta	Y/N
1705BRR-V1705	WHSE / BFD	1	CMP22	W	106.39	0.00	106.39	97.00	9.39	Y
1728BRR-V1728	WHSE / BFD	1	CMP22	W	106.39	0.00	106.39	97.00	9.39	Y
1787BRR-V1787	WHSE / BFD	1	CMP22	W	106.39	0.00	106.39	97.00	9.39	Y
202BRR-V202	WHSE / BFD	1	CMP22	W	106.39	0.00	106.39	97.00	9.39	Y
552BRR-V552	UNKNOWN / UNKNOWN	1	CMP22	W	106.39	0.00	106.39	97.00	9.39	Y
798BRR-V798	WHSE / BFD	1	CMP22	W	106.39	0.00	106.39	97.00	9.39	Y
SOV1705	ASCO / CAT. NO. NP831655V	1	CMP22	W	106.39	0.00	106.39	91.00	15.39	Y
SOV1728	ASCO / CAT. NO. NPK831654V	1	CMP22	W	106.39	0.00	106.39	91.00	15.39	Y
SOV1787	ASCO / CAT. NO. NP8320A183V	1	CMP22	W	106.39	0.00	106.39	91.00	15.39	Y
SOV202	ASCO / CAT. NO. NP8320A185V	1	CMP22	W	106.39	0.00	106.39	91.00	15.39	Y
SOV552	ASCO / CAT. NO. 206-381-6RF	1	CMP22	W	106.39	0.00	106.39	91.00	15.39	Y
SOV798	ASCO / CAT. NO.206-381-4RVU	1	CMP22	W	106.39	0.00	106.39	91.00	15.39	Y

Path Voltage Drop Summary

Generation Date: 03/06/2008 11:01 am

Battery: 22 **Node:** 18 **Circuit:** DP22-06 **Schematic:** B226967

Device ID	Mfgr/Model	Path	Scenario	Time	Node Voltage	Path VD	Device Voltage	Required Voltage	Voltage Delta	Y/N
IVSW3518	VALCOR / V526 Series	1	CMP22	W	106.39	0.00	106.39	91.00	15.39	Y

Path Voltage Drop Summary

Generation Date: 03/06/2008 11:01 am

Battery: 22 **Node:** 18 **Circuit:** DP22-06 **Schematic:** IP2-S-000006

Device ID	Mfgr/Model	Path	Scenario	Time	Node Voltage	Path VD	Device Voltage	Required Voltage	Voltage Delta	Y/N
SOV1413-V1413	UNKNOWN / UNKNOWN	1	CMP22	W	106.39	0.00	106.39	103.00	3.39	Y

Path Voltage Drop Summary

Generation Date: 03/06/2008 11:01 am

Battery: 22 **Node:** 19 **Circuit:** DG22-CONTR **Schematic:** A208540

Device ID	Mfgr/Model	Path	Scenario	Time	Node Voltage	Path VD	Device Voltage	Required Voltage	Voltage Delta	Y/N
86-EDG 22	WHSE / MG-6	1	CMP22	W	104.35	0.00	104.35	101.00	3.35	Y
86X-EDG 22	UNKNOWN / UNKNOWN	1	CMP22	W	104.35	0.00	104.35	97.00	7.35	Y
CVX-EDG 22	WHSE / MG-6	1	CMP22	W	104.35	0.00	104.35	101.00	3.35	Y
VBR-EDG 22	WHSE / CV	1	CMP22	W	104.35	0.00	104.35	101.00	3.35	Y

Path Voltage Drop Summary

Generation Date: 03/06/2008 11:01 am

Battery: 22 **Node:** 19 **Circuit:** DG22-CONTR **Schematic:** IP2-S-000285

Device ID	Mfgr/Model	Path	Scenario	Time	Node Voltage	Path VD	Device Voltage	Required Voltage	Voltage Delta	Y/N
32X-EDG 22	UNKNOWN / UNKNOWN	1	CMP22	W	104.35	0.00	104.35	97.00	7.35	Y
51VX-EDG 22	UNKNOWN / UNKNOWN	1	CMP22	W	104.35	0.00	104.35	97.00	7.35	Y
AGA/1-EDG 22	AGASTAT / UNKNOWN	1	CMP22	W	104.35	0.00	104.35	101.00	3.35	Y
AGA/2-EDG 22	AGASTAT / UNKNOWN	1	CMP22	W	104.35	0.00	104.35	101.00	3.35	Y
ANNUNHORN-EDG 22	PANALARM / HORN FOR ANNUNCIATOR	1	CMP22	W	104.35	0.00	104.35	101.00	3.35	Y
ASR-EDG 22	UNKNOWN / UNKNOWN	1	CMP22	W	104.35	0.00	104.35	97.00	7.35	Y
ASV/1-EDG 22	ROSS / SERIES 27	1	CMP22	W	104.35	0.03	104.32	75.00	29.32	Y
ASV/2-EDG 22	ROSS / SERIES 27	1	CMP22	W	104.35	0.03	104.32	75.00	29.32	Y
CR/1-EDG 22	UNKNOWN / UNKNOWN W/ DIODE IN	1	CMP22	W	104.35	0.00	104.35	97.00	7.35	Y
CR/2-EDG 22	UNKNOWN / UNKNOWN W/ DIODE IN	1	CMP22	W	104.35	0.00	104.35	97.00	7.35	Y
EDD6	ASCO / AUTO TRANSFER P/N 30	1	CMP22	W	104.35	0.00	104.35	101.00	3.35	Y
ESR/1-EDG 22	UNKNOWN / UNKNOWN W/ DIODE IN	1	CMP22	W	104.35	0.00	104.35	97.00	7.35	Y
ESR/2-EDG 22	UNKNOWN / UNKNOWN W/ DIODE IN	1	CMP22	W	104.35	0.00	104.35	97.00	7.35	Y
ESRX/1-EDG 22	WHSE / NBFD	1	CMP22	W	104.35	0.10	104.25	101.00	3.25	Y
ESRX/1-EDG 22	WHSE / NBFD	2	CMP22	W	104.35	0.08	104.27	101.00	3.27	Y
ESRX/2-EDG 22	WHSE / NBFD	1	CMP22	W	104.35	0.10	104.25	101.00	3.25	Y
ESRX/2-EDG 22	WHSE / NBFD	2	CMP22	W	104.35	0.09	104.26	101.00	3.26	Y
ESS-EDG 22	UNKNOWN / 1 PUSHBUTTON LT	1	CMP22	W	104.35	0.00	104.35	101.00	3.35	Y
FLD FLASH-EDG 22	ALCO / FIELD FLASH	1	CMP22	W	104.35	0.00	104.35	1.00	103.35	Y
FODPR-EDG 22	UNKNOWN / UNKNOWN W/ DIODE IN	1	CMP22	W	104.35	0.00	104.35	97.00	7.35	Y
FODSR-EDG 22	UNKNOWN / UNKNOWN W/ DIODE IN	1	CMP22	W	104.35	0.00	104.35	97.00	7.35	Y
FR-EDG 22	UNKNOWN / UNKNOWN	1	CMP22	W	104.35	0.00	104.35	97.00	7.35	Y
H/HWTR-EDG 22	UNKNOWN / UNKNOWN W/ DIODE IN	1	CMP22	W	104.35	0.00	104.35	97.00	7.35	Y
HL/LOTR-EDG 22	UNKNOWN / UNKNOWN W/ DIODE IN	1	CMP22	W	104.35	0.00	104.35	97.00	7.35	Y
HLOTR/1-EDG 22	UNKNOWN / UNKNOWN W/ DIODE IN	1	CMP22	W	104.35	0.00	104.35	97.00	7.35	Y
HR-EDG 22	UNKNOWN / UNKNOWN	1	CMP22	W	104.35	0.00	104.35	97.00	7.35	Y
HWTR-EDG 22	UNKNOWN / UNKNOWN W/ DIODE IN	1	CMP22	W	104.35	0.00	104.35	97.00	7.35	Y
HWTR/1-EDG 22	UNKNOWN / UNKNOWN W/ DIODE IN	1	CMP22	W	104.35	0.00	104.35	97.00	7.35	Y
K1X-EDG 22	UNKNOWN / UNKNOWN W/ DIODE IN	1	CMP22	W	104.35	0.00	104.35	97.00	7.35	Y
LAPR-EDG 22	UNKNOWN / UNKNOWN W/ DIODE IN	1	CMP22	W	104.35	0.00	104.35	97.00	7.35	Y
LFLR-EDG 22	UNKNOWN / UNKNOWN W/ DIODE IN	1	CMP22	W	104.35	0.00	104.35	97.00	7.35	Y
LODFR-EDG 22	UNKNOWN / UNKNOWN W/ DIODE IN	1	CMP22	W	104.35	0.00	104.35	97.00	7.35	Y
LODSR-EDG 22	UNKNOWN / UNKNOWN W/ DIODE IN	1	CMP22	W	104.35	0.00	104.35	97.00	7.35	Y
NST-EDG 22	UNKNOWN / UNKNOWN TIME DELAY	1	CMP22	W	104.35	0.00	104.35	101.00	3.35	Y
OCR-EDG 22	UNKNOWN / UNKNOWN	1	CMP22	W	104.35	0.00	104.35	97.00	7.35	Y
OCT/1-EDG 22	AMERACE / CAT. NO. 7012PD	1	CMP22	W	104.35	0.00	104.35	101.00	3.35	Y
OCT/2-EDG 22	AMERACE / CAT. NO. 7012PD	1	CMP22	W	104.35	0.00	104.35	101.00	3.35	Y
OPR-EDG 22	UNKNOWN / UNKNOWN W/ DIODE IN	1	CMP22	W	104.35	0.00	104.35	97.00	7.35	Y
OPT1-EDG 22	AMERACE / CAT. NO. 7012PD	1	CMP22	W	104.35	0.00	104.35	101.00	3.35	Y
OPT2-EDG 22	AMERACE / CAT. NO. 7012PD	1	CMP22	W	104.35	0.00	104.35	101.00	3.35	Y
OSR-EDG 22	UNKNOWN / UNKNOWN W/ DIODE IN	1	CMP22	W	104.35	0.00	104.35	97.00	7.35	Y
PDT-EDG 22	UNKNOWN / UNKNOWN TIME DELAY	1	CMP22	W	104.35	0.00	104.35	101.00	3.35	Y
R1-EDG 22	WHSE / BFD	1	CMP22	W	104.35	0.00	104.35	97.00	7.35	Y
R2-EDG 22	WHSE / BFD	1	CMP22	W	104.35	0.00	104.35	97.00	7.35	Y
RR-EDG 22	UNKNOWN / UNKNOWN W/ DIODE IN	1	CMP22	W	104.35	0.00	104.35	97.00	7.35	Y

Path Voltage Drop Summary

Generation Date: 03/06/2008 11:01 am

Battery: 22 **Node:** 19 **Circuit:** DG22-CONTR **Schematic:** IP2-S-000285

Device ID	Mfgr/Model	Path	Scenario	Time	Node Voltage	Path VD	Device Voltage	Required Voltage	Voltage Delta	Y/N
SDR-EDG 22	AMERACE / CAT. NO.	1	CMP22	W	104.35	0.00	104.35	101.00	3.35	Y
UPR-EDG 22	UNKNOWN / UNKNOWN	1	CMP22	W	104.35	0.00	104.35	97.00	7.35	Y

Path Voltage Drop Summary

Generation Date: 03/06/2008 11:01 am

Battery: 22 **Node:** 19 **Circuit:** DG22-CONTR **Schematic:** IP2-S-000365

Device ID	Mfgr/Model	Path	Scenario	Time	Node Voltage	Path VD	Device Voltage	Required Voltage	Voltage Delta	Y/N
JWPS(3,4)X-EDG 22	WHSE / NBFD	1	CMP22	W	104.35	0.00	104.35	101.00	3.35	Y
K1-EDG 22	WHSE / TYPE MLLO-2H	1	CMP22	W	104.35	0.00	104.35	101.00	3.35	Y
K1T-EDG 22	UNKNOWN / UNKNOWN	1	CMP22	W	104.35	0.00	104.35	97.00	7.35	Y
K2-EDG 22	WHSE / TYPE MLLO-2H	1	CMP22	W	104.35	0.00	104.35	101.00	3.35	Y
K4-EDG 22	UNKNOWN / UNKNOWN W/ DIODE IN	1	CMP22	W	104.35	0.00	104.35	97.00	7.35	Y

Path Voltage Drop Summary

Generation Date: 03/06/2008 11:01 am

Battery: 22 **Node:** 20 **Circuit:** PP22-14 **Schematic:** 011D13784

Device ID	Mfgr/Model	Path	Scenario	Time	Node Voltage	Path VD	Device Voltage	Required Voltage	Voltage Delta	Y/N
INVERTER PA	SCI / 10 KVA INV, SV12100/	1	CMP22	W	107.64	0.00	107.64	105.00	2.64	Y

Path Voltage Drop Summary

Generation Date: 03/06/2008 11:01 am

Battery: 22 **Node:** 21 **Circuit:** PP22-15 **Schematic:** 1975M1487

Device ID	Mfgr/Model	Path	Scenario	Time	Node Voltage	Path VD	Device Voltage	Required Voltage	Voltage Delta	Y/N
INVERTER 22	SCI / INV 22	1	CMP22	W	109.67	0.00	109.67	105.00	4.67	Y

Attachment B
Path Voltage Drop Summary

Revised pages

By: Robert J Fletcher Date: 8/26/05
Check: [illegible] Date: 8-26-05

Path Voltage Drop Summary

Generation Date: 08/23/2005 06:30 pm

Battery: 22 **Node:** 3 **Circuit:** BC-22 **Schematic:** IP2-S-000358

Device ID	Mfgr/Model	Path	Scenario	Time	Node Voltage	Path VD	Device Voltage	Required Voltage	Voltage Delta	Y/N
27/B22	ABB / CAT. NO. 439U6345	1	CMP22	W	112.59	0.00	112.59	88.50	24.09	Y

Path Voltage Drop Summary

Generation Date: 08/23/2005 06:30 pm

Battery: 22 **Node:** 4 **Circuit:** DP22AA-01 **Schematic:** A208548

Device ID	Mfgr/Model	Path	Scenario	Time	Node Voltage	Path VD	Device Voltage	Required Voltage	Voltage Delta	Y/N
SOVE-5	ASCO / CAT. NO. NP831655E	1	CMP22	W	112.44	0.00	112.44	91.00	21.44	Y
SOVEW-2	ASCO / CAT. NO. 206-381-3FR	1	CMP22	W	112.44	0.00	112.44	91.00	21.44	Y

Path Voltage Drop Summary

Generation Date: 08/23/2005 06:30 pm

Battery: 22 **Node:** 4 **Circuit:** DP22AA-02 **Schematic:** A208551

Device ID	Mfgr/Model	Path	Scenario	Time	Node Voltage	Path VD	Device Voltage	Required Voltage	Voltage Delta	Y/N
SOV3401	VALCOR / V526 Series	1	CMP22	W	112.44	0.00	112.44	91.00	21.44	Y
SOV3402	VALCOR / V526 Series	1	CMP22	W	112.44	0.00	112.44	91.00	21.44	Y
SOV3412	VALCOR / V526 Series	1	CMP22	W	112.44	0.00	112.44	91.00	21.44	Y
SOV3413	VALCOR / V526 Series	1	CMP22	W	112.44	0.00	112.44	91.00	21.44	Y

Path Voltage Drop Summary

Generation Date: 08/23/2005 06:30 pm

Battery: 22 **Node:** 4 **Circuit:** DP22AA-03 **Schematic:** A208551

Device ID	Mfgr/Model	Path	Scenario	Time	Node Voltage	Path VD	Device Voltage	Required Voltage	Voltage Delta	Y/N
SOV3403	VALCOR / V526 Series	1	CMP22	W	112.44	0.00	112.44	91.00	21.44	Y
SOV3404	UNKNOWN / UNKNOWN	1	CMP22	W	112.44	0.00	112.44	103.00	9.44	Y
SOV3405	VALCOR / V526 Series	1	CMP22	W	112.44	0.00	112.44	91.00	21.44	Y
SOV3406	VALCOR / V526 Series	1	CMP22	W	112.44	0.00	112.44	91.00	21.44	Y

Path Voltage Drop Summary

Generation Date: 08/23/2005 06:30 pm

Battery: 22 **Node:** 4 **Circuit:** DP22AA-04 **Schematic:** A208551

Device ID	Mfgr/Model	Path	Scenario	Time	Node Voltage	Path VD	Device Voltage	Required Voltage	Voltage Delta	Y/N
SOV3407	VALCOR / V526 Series	1	CMP22	W	112.44	0.00	112.44	91.00	21.44	Y
SOV3408	VALCOR / V526 Series	1	CMP22	W	112.44	0.00	112.44	91.00	21.44	Y
SOV3409	VALCOR / V526 Series	1	CMP22	W	112.44	0.00	112.44	91.00	21.44	Y
SOV3410	VALCOR / V526 Series	1	CMP22	W	112.44	0.00	112.44	91.00	21.44	Y
SOV3411	VALCOR / V526 Series	1	CMP22	W	112.44	0.00	112.44	91.00	21.44	Y

Path Voltage Drop Summary

Generation Date: 08/23/2005 06:30 pm

Battery: 22 **Node:** 4 **Circuit:** DP22AA-05 **Schematic:** IP2-S-000092

Device ID	Mfgr/Model	Path	Scenario	Time	Node Voltage	Path VD	Device Voltage	Required Voltage	Voltage Delta	Y/N
SOV5019	VALCOR / V526 Series	1	CMP22	W	112.44	0.00	112.44	91.00	21.44	Y
SOV5023	VALCOR / V526 Series	1	CMP22	W	112.44	0.00	112.44	91.00	21.44	Y

Path Voltage Drop Summary

Generation Date: 08/23/2005 06:30 pm

Battery: 22 **Node:** 4 **Circuit:** DP22AA-06 **Schematic:** B209543

Device ID	Mfgr/Model	Path	Scenario	Time	Node Voltage	Path VD	Device Voltage	Required Voltage	Voltage Delta	Y/N
SOV5046	ASCO / CAT. NO. NP8316A54E	1	CMP22	W	112.44	0.00	112.44	91.00	21.44	Y
SOV5050	ASCO / CAT. NO. NP8320A187E	1	CMP22	W	112.44	0.00	112.44	91.00	21.44	Y

Path Voltage Drop Summary

Generation Date: 08/23/2005 06:30 pm

Battery: 22 **Node:** 4 **Circuit:** DP22AA-06 **Schematic:** B209545

Device ID	Mfgr/Model	Path	Scenario	Time	Node Voltage	Path VD	Device Voltage	Required Voltage	Voltage Delta	Y/N
SOV5047	ASCO / CAT. NO. NP8316A54E	1	CMP22	W	112.44	0.00	112.44	91.00	21.44	Y
SOV5051	ASCO / CAT. NO. NP8320A187E	1	CMP22	W	112.44	0.00	112.44	91.00	21.44	Y

Path Voltage Drop Summary

Generation Date: 08/23/2005 06:30 pm

Battery: 22 **Node:** 4 **Circuit:** DP22AA-06 **Schematic:** B209546

Device ID	Mfgr/Model	Path	Scenario	Time	Node Voltage	Path VD	Device Voltage	Required Voltage	Voltage Delta	Y/N
SOV5048	ASCO / CAT. NO. NP8316A54E	1	CMP22	W	112.44	0.00	112.44	91.00	21.44	Y
SOV5052	ASCO / CAT. NO. NP8320A187E	1	CMP22	W	112.44	0.00	112.44	91.00	21.44	Y

Path Voltage Drop Summary

Generation Date: 08/23/2005 06:30 pm

Battery: 22 **Node:** 4 **Circuit:** DP22AA-06 **Schematic:** B209547

Device ID	Mfgr/Model	Path	Scenario	Time	Node Voltage	Path VD	Device Voltage	Required Voltage	Voltage Delta	Y/N
SOV5049	ASCO / CAT. NO. NP8316A54E	1	CMP22	W	112.44	0.00	112.44	91.00	21.44	Y
SOV5053	ASCO / CAT. NO. NP8320A187E	1	CMP22	W	112.44	0.00	112.44	91.00	21.44	Y

Path Voltage Drop Summary

Generation Date: 08/23/2005 06:30 pm

Battery: 22 **Node:** 4 **Circuit:** DP22AA-07 **Schematic:** 322462

Device ID	Mfgr/Model	Path	Scenario	Time	Node Voltage	Path VD	Device Voltage	Required Voltage	Voltage Delta	Y/N
33X/3518-EPFP3518	WHSE / NBFD	1	CMP22	W	112.44	0.00	112.44	101.00	11.44	Y

Path Voltage Drop Summary

Generation Date: 08/23/2005 06:30 pm

Battery: 22 **Node:** 5 **Circuit:** DA5 XFR SW **Schematic:** 195B47

Device ID	Mfgr/Model	Path	Scenario	Time	Node Voltage	Path VD	Device Voltage	Required Voltage	Voltage Delta	Y/N
DA5	ASCO / TYPE BULLETIN 908, A	1	CMP22	W	112.57	0.00	112.57	1.00	111.57	Y

Path Voltage Drop Summary

Generation Date: 08/23/2005 06:30 pm

Battery: 22 **Node:** 8 **Circuit:** DP22A-02 **Schematic:** 206799

Device ID	Mfgr/Model	Path	Scenario	Time	Node Voltage	Path VD	Device Voltage	Required Voltage	Voltage Delta	Y/N
OPXB-RCS OPS	WHSE / BFD	1	CMP22	W	112.12	0.00	112.12	97.00	15.12	Y
OPXB1-RCS OPS	WHSE / BFD	1	CMP22	W	112.12	0.00	112.12	97.00	15.12	Y
OPXB2-RCS OPS	WHSE / BFD	1	CMP22	W	112.12	0.00	112.12	97.00	15.12	Y

Path Voltage Drop Summary

Generation Date: 08/23/2005 06:30 pm

Battery: 22 **Node:** 8 **Circuit:** DP22A-03 **Schematic:** B235113

Device ID	Mfgr/Model	Path	Scenario	Time	Node Voltage	Path VD	Device Voltage	Required Voltage	Voltage Delta	Y/N
SOV1311	ASCO / CAT. NO. NP831665E	1	CMP22	W	112.12	0.00	112.12	91.00	21.12	Y
TC1113S/X-V1311	UNKNOWN / UNKNOWN	1	CMP22	W	112.12	0.00	112.12	101.00	11.12	Y

Path Voltage Drop Summary

Generation Date: 08/23/2005 06:30 pm

Battery: 22 **Node:** 9 **Circuit:** DP22A-01 **Schematic:** A206900

Device ID	Mfgr/Model	Path	Scenario	Time	Node Voltage	Path VD	Device Voltage	Required Voltage	Voltage Delta	Y/N
INVERTER EGA6	TOPAZ / 1 KVA INVERTER	1	CMP22	W	110.73	0.00	110.73	101.00	9.73	Y

Path Voltage Drop Summary

Generation Date: 08/23/2005 06:30 pm

Battery: 22 **Node:** 10 **Circuit:** BUS 2A **Schematic:** 9321-LL-3117 SH 03A

Device ID	Mfgr/Model	Path	Scenario	Time	Node Voltage	Path VD	Device Voltage	Required Voltage	Voltage Delta	Y/N
27-S1/2A-2A	ABB / TYPE 27N, SERIES 411	1	CMP22	W	108.81	0.00	108.81	101.00	7.81	Y
27-S2/2A-2A	ABB / TYPE 27N, SERIES 411	1	CMP22	W	108.81	0.00	108.81	101.00	7.81	Y
47X-SG21-U26A	WHSE / SG	1	CMP22	W	108.81	0.00	108.81	101.00	7.81	Y
62-1/2A-2A	AGASTAT / UNKNOWN	1	CMP22	W	108.81	0.00	108.81	101.00	7.81	Y
62/2A-2A	AGASTAT / UNKNOWN	1	CMP22	W	108.81	0.00	108.81	101.00	7.81	Y

Path Voltage Drop Summary

Generation Date: 08/23/2005 06:30 pm

Battery: 22 **Node:** 10 **Circuit:** BUS 2A **Schematic:** 9321-LL-3117 SH 06

Device ID	Mfgr/Model	Path	Scenario	Time	Node Voltage	Path VD	Device Voltage	Required Voltage	Voltage Delta	Y/N
26BX/O-2A	UNKNOWN / UNKNOWN	1	CMP22	W	108.81	0.00	108.81	101.00	7.81	Y
26BX/R-2A	UNKNOWN / UNKNOWN	1	CMP22	W	108.81	0.00	108.81	101.00	7.81	Y
52CC-2A	WHSE / DB-75-CC	1	CMP22	33	108.81	0.00	108.81	91.00	17.81	Y
52TC-2A	WHSE / DB-75-TC	1	CMP22	09	115.17	0.23	114.94	71.00	43.94	Y
52TC-2A	WHSE / DB-75-TC	1	CMP22	10	109.72	0.22	109.51	71.00	38.51	Y
52TC-2A	WHSE / DB-75-TC	2	CMP22	01	110.69	1.62	109.07	71.00	38.07	Y
52X-2A	WHSE / X- CLOSING RELAY (0.	1	CMP22	32	112.19	0.00	112.19	91.00	21.19	Y
52X-2A	WHSE / X- CLOSING RELAY (0.	1	CMP22	33	108.81	0.00	108.81	91.00	17.81	Y
74/2A-2A	WHSE / BFD	1	CMP22	W	108.81	0.00	108.81	97.00	11.81	Y

Path Voltage Drop Summary

Generation Date: 08/23/2005 06:30 pm

Battery: 22 **Node:** 10 **Circuit:** BUS 2A **Schematic:** 9321-LL-3117 SH 08

Device ID	Mfgr/Model	Path	Scenario	Time	Node Voltage	Path VD	Device Voltage	Required Voltage	Voltage Delta	Y/N
21BX/O-EG2A	UNKNOWN / UNKNOWN	1	CMP22	W	108.81	0.00	108.81	101.00	7.81	Y
21BX/R-EG2A	UNKNOWN / UNKNOWN	1	CMP22	W	108.81	0.00	108.81	101.00	7.81	Y
21BX1/O-EG2A	UNKNOWN / UNKNOWN	1	CMP22	W	108.81	0.00	108.81	101.00	7.81	Y
21BX1/R-EG2A	UNKNOWN / UNKNOWN	1	CMP22	W	108.81	0.00	108.81	101.00	7.81	Y
52CC-EG2A	WHSE / DB-75-CC	1	CMP22	10	109.72	0.00	109.72	91.00	18.72	Y
52CC-EG2A	WHSE / DB-75-CC	1	CMP22	33	108.81	0.00	108.81	91.00	17.81	Y
52TC-EG2A	WHSE / DB-75-TC	1	CMP22	W	108.81	0.00	108.81	71.00	37.81	Y
52X-EG2A	WHSE / X- CLOSING RELAY (0.	1	CMP22	09	115.17	0.00	115.17	91.00	24.17	Y
52X-EG2A	WHSE / X- CLOSING RELAY (0.	1	CMP22	10	109.72	0.00	109.72	91.00	18.72	Y
52X-EG2A	WHSE / X- CLOSING RELAY (0.	1	CMP22	32	112.19	0.00	112.19	91.00	21.19	Y
52X-EG2A	WHSE / X- CLOSING RELAY (0.	1	CMP22	33	108.81	0.00	108.81	91.00	17.81	Y
74/EG2A-EG2A	WHSE / BFD	1	CMP22	W	108.81	0.00	108.81	97.00	11.81	Y

Path Voltage Drop Summary

Generation Date: 08/23/2005 06:30 pm

Battery: 22 **Node:** 10 **Circuit:** BUS 2A **Schematic:** 9321-LL-3117 SH 11

Device ID	Mfgr/Model	Path	Scenario	Time	Node Voltage	Path VD	Device Voltage	Required Voltage	Voltage Delta	Y/N
52CC-LT1N	WHSE / DB-50-CC	1	CMP22	W	108.81	0.00	108.81	91.00	17.81	Y
52CC-MCC1	WHSE / DB-50-CC	1	CMP22	W	108.81	0.00	108.81	91.00	17.81	Y
52CC-MCC10	WHSE / DB-50-CC	1	CMP22	W	108.81	0.00	108.81	91.00	17.81	Y
52CC-MCC3	WHSE / DB-50-CC	1	CMP22	W	108.81	0.00	108.81	91.00	17.81	Y
52CC-MCC4A	WHSE / DB-50-CC	1	CMP22	33	108.81	0.00	108.81	91.00	17.81	Y
52CC-MCC8A	WHSE / DB-50-CC	1	CMP22	W	108.81	0.00	108.81	91.00	17.81	Y
52TC-LT1N	WHSE / DB-50-TC	1	CMP22	01	110.69	0.73	109.95	71.00	38.95	Y
52TC-MCC1	WHSE / DB-50-TC	1	CMP22	01	110.69	0.75	109.94	71.00	38.94	Y
52TC-MCC10	WHSE / DB-50-TC	1	CMP22	01	110.69	0.73	109.95	71.00	38.95	Y
52TC-MCC3	WHSE / DB-50-TC	1	CMP22	01	110.69	0.73	109.95	71.00	38.95	Y
52TC-MCC4A	WHSE / DB-50-TC	1	CMP22	01	110.69	0.81	109.87	71.00	38.87	Y
52TC-MCC8A	WHSE / DB-50-TC	1	CMP22	01	110.69	1.02	109.67	71.00	38.67	Y
52X-LT1N	WHSE / X- CLOSING RELAY (0.	1	CMP22	W	108.81	0.00	108.81	91.00	17.81	Y
52X-MCC1	WHSE / X- CLOSING RELAY (0.	1	CMP22	W	108.81	0.00	108.81	91.00	17.81	Y
52X-MCC10	WHSE / X- CLOSING RELAY (0.	1	CMP22	W	108.81	0.00	108.81	91.00	17.81	Y
52X-MCC3	WHSE / X- CLOSING RELAY (0.	1	CMP22	W	108.81	0.00	108.81	91.00	17.81	Y
52X-MCC4A	WHSE / X- CLOSING RELAY (0.	1	CMP22	32	112.19	0.00	112.19	91.00	21.19	Y
52X-MCC4A	WHSE / X- CLOSING RELAY (0.	1	CMP22	33	108.81	0.00	108.81	91.00	17.81	Y
52X-MCC8A	WHSE / X- CLOSING RELAY (0.	1	CMP22	W	108.81	0.00	108.81	91.00	17.81	Y

Path Voltage Drop Summary

Generation Date: 08/23/2005 06:30 pm

Battery: 22 **Node:** 10 **Circuit:** BUS 2A **Schematic:** A208088

Device ID	Mfgr/Model	Path	Scenario	Time	Node Voltage	Path VD	Device Voltage	Required Voltage	Voltage Delta	Y/N
EDD2	ASCO / AUTO TRANSFER P/N 30	1	CMP22	W	108.81	0.00	108.81	101.00	7.81	Y

Path Voltage Drop Summary

Generation Date: 08/23/2005 06:30 pm

Battery: 22 **Node:** 10 **Circuit:** BUS 2A **Schematic:** B225135

Device ID	Mfgr/Model	Path	Scenario	Time	Node Voltage	Path VD	Device Voltage	Required Voltage	Voltage Delta	Y/N
2/SI2A-SI2A	UNKNOWN / UNKNOWN	1	CMP22	W	108.81	0.00	108.81	101.00	7.81	Y
52CC-SI2A	WHSE / DB-50-CC	1	CMP22	06	111.69	0.00	111.69	91.00	20.69	Y
52CC-SI2A	WHSE / DB-50-CC	1	CMP22	13	111.70	0.00	111.70	91.00	20.70	Y
52TC-SI2A	WHSE / DB-50-TC	1	CMP22	01	110.69	2.24	108.44	71.00	37.44	Y
52TC-SI2A	WHSE / DB-50-TC	1	CMP22	25	114.82	2.33	112.49	71.00	41.49	Y
52X-SI2A	WHSE / X- CLOSING RELAY (0.	1	CMP22	05	115.15	0.00	115.15	91.00	24.15	Y
52X-SI2A	WHSE / X- CLOSING RELAY (0.	1	CMP22	06	111.69	0.00	111.69	91.00	20.69	Y
52X-SI2A	WHSE / X- CLOSING RELAY (0.	1	CMP22	12	115.17	0.00	115.17	91.00	24.17	Y
52X-SI2A	WHSE / X- CLOSING RELAY (0.	1	CMP22	13	111.70	0.00	111.70	91.00	20.70	Y
74-SI2A	WHSE / BFD	1	CMP22	W	108.81	0.00	108.81	97.00	11.81	Y

Path Voltage Drop Summary

Generation Date: 08/23/2005 06:30 pm

Battery: 22 **Node:** 10 **Circuit:** BUS 2A **Schematic:** B225141

Device ID	Mfgr/Model	Path	Scenario	Time	Node Voltage	Path VD	Device Voltage	Required Voltage	Voltage Delta	Y/N
2/SW5B-SW5B	UNKNOWN / UNKNOWN	1	CMP22	W	108.81	0.00	108.81	101.00	7.81	Y
52CC-SW5B	WHSE / DB-50-CC	1	CMP22	16	111.70	0.00	111.70	91.00	20.70	Y
52TC-SW5B	WHSE / DB-50-TC	1	CMP22	01	110.69	2.29	108.40	71.00	37.40	Y
52X-SW5B	WHSE / X- CLOSING RELAY (0.	1	CMP22	15	115.17	0.00	115.17	91.00	24.17	Y
52X-SW5B	WHSE / X- CLOSING RELAY (0.	1	CMP22	16	111.70	0.00	111.70	91.00	20.70	Y
74/SW5B	UNKNOWN / UNKNOWN	1	CMP22	W	108.81	0.00	108.81	101.00	7.81	Y
M-SW5B	UNKNOWN / TIME METER	1	CMP22	W	108.81	0.00	108.81	101.00	7.81	Y
S25A-SW5B	UNKNOWN / UNKNOWN	1	CMP22	W	108.81	0.00	108.81	101.00	7.81	Y

Path Voltage Drop Summary

Generation Date: 08/23/2005 06:30 pm

Battery: 22 **Node:** 10 **Circuit:** BUS 2A **Schematic:** B225145

Device ID	Mfgr/Model	Path	Scenario	Time	Node Voltage	Path VD	Device Voltage	Required Voltage	Voltage Delta	Y/N
52CC-PBU2	WHSE / DB-50-CC	1	CMP22	W	108.81	0.00	108.81	91.00	17.81	Y
52TC-PBU2	WHSE / DB-50-TC	1	CMP22	01	110.69	1.04	109.65	71.00	38.65	Y
52X-PBU2	WHSE / X- CLOSING RELAY (0.	1	CMP22	W	108.81	0.00	108.81	91.00	17.81	Y
74/PBU2-PBU2	WHSE / BFD	1	CMP22	W	108.81	0.00	108.81	97.00	11.81	Y
86-PBU2	WHSE / BFD	1	CMP22	W	108.81	0.12	108.69	97.00	11.69	Y

Path Voltage Drop Summary

Generation Date: 08/23/2005 06:30 pm

Battery: 22 **Node:** 10 **Circuit:** BUS 2A **Schematic:** B225147

Device ID	Mfgr/Model	Path	Scenario	Time	Node Voltage	Path VD	Device Voltage	Required Voltage	Voltage Delta	Y/N
2/SW2A-SW2A	UNKNOWN / UNKNOWN	1	CMP22	W	108.81	0.00	108.81	101.00	7.81	Y
52CC-SW2A	WHSE / DB-50-CC	1	CMP22	16	111.70	0.00	111.70	91.00	20.70	Y
52TC-SW2A	WHSE / DB-50-TC	1	CMP22	01	110.69	2.21	108.47	71.00	37.47	Y
52X-SW2A	WHSE / X- CLOSING RELAY (0.	1	CMP22	15	115.17	0.00	115.17	91.00	24.17	Y
52X-SW2A	WHSE / X- CLOSING RELAY (0.	1	CMP22	16	111.70	0.00	111.70	91.00	20.70	Y
74/SW2A	UNKNOWN / UNKNOWN	1	CMP22	W	108.81	0.00	108.81	101.00	7.81	Y
M-SW2A	UNKNOWN / TIME METER	1	CMP22	W	108.81	0.00	108.81	101.00	7.81	Y
S24A-SW2A	UNKNOWN / UNKNOWN	1	CMP22	W	108.81	0.00	108.81	101.00	7.81	Y

Path Voltage Drop Summary

Generation Date: 08/23/2005 06:30 pm

Battery: 22 **Node:** 10 **Circuit:** BUS 2A **Schematic:** B225150

Device ID	Mfgr/Model	Path	Scenario	Time	Node Voltage	Path VD	Device Voltage	Required Voltage	Voltage Delta	Y/N
52CC-CC2	WHSE / DB-50-CC	1	CMP22	27	111.70	0.00	111.70	91.00	20.70	Y
52TC-CC2	WHSE / DB-50-TC	1	CMP22	01	110.69	0.00	110.69	71.00	39.69	Y
52X-CC2	WHSE / X- CLOSING RELAY (0.	1	CMP22	26	115.17	0.00	115.17	91.00	24.17	Y
52X-CC2	WHSE / X- CLOSING RELAY (0.	1	CMP22	27	111.70	0.00	111.70	91.00	20.70	Y
74-CC2	UNKNOWN / UNKNOWN	1	CMP22	W	108.81	0.00	108.81	101.00	7.81	Y
86-CC2	WHSE / 86 LOCKOUT RELAY (0.	1	CMP22	W	108.81	0.00	108.81	71.00	37.81	Y
CC2/2TD-CC2	UNKNOWN / UNKNOWN	1	CMP22	W	108.81	0.00	108.81	101.00	7.81	Y

Path Voltage Drop Summary

Generation Date: 08/23/2005 06:30 pm

Battery: 22 **Node:** 10 **Circuit:** BUS 2A **Schematic:** B225152

Device ID	Mfgr/Model	Path	Scenario	Time	Node Voltage	Path VD	Device Voltage	Required Voltage	Voltage Delta	Y/N
2-CRF3-CRF 23	UNKNOWN / UNKNOWN	1	CMP22	W	108.81	0.00	108.81	101.00	7.81	Y
52CC-CRF 23	WHSE / DB-50-CC	1	CMP22	22	111.70	0.00	111.70	91.00	20.70	Y
52TC-CRF 23	WHSE / DB-50-TC	1	CMP22	01	110.69	1.47	109.21	71.00	38.21	Y
52X-CRF 23	WHSE / X- CLOSING RELAY (0.	1	CMP22	21	115.17	0.00	115.17	91.00	24.17	Y
52X-CRF 23	WHSE / X- CLOSING RELAY (0.	1	CMP22	22	111.70	0.00	111.70	91.00	20.70	Y
74-CRF 23	WHSE / BFD	1	CMP22	W	108.81	0.00	108.81	97.00	11.81	Y

Path Voltage Drop Summary

Generation Date: 08/23/2005 06:30 pm

Battery: 22 **Node:** 10 **Circuit:** BUS 2A **Schematic:** B253867

Device ID	Mfgr/Model	Path	Scenario	Time	Node Voltage	Path VD	Device Voltage	Required Voltage	Voltage Delta	Y/N
52CC-MG1	WHSE / DB-50-CC	1	CMP22	W	108.81	0.00	108.81	91.00	17.81	Y
52TC-MG1	WHSE / DB-50-TC	1	CMP22	01	110.69	2.37	108.32	71.00	37.32	Y
52X-MG1	WHSE / X- CLOSING RELAY (0.	1	CMP22	W	108.81	0.00	108.81	91.00	17.81	Y
74/1-MG1	WHSE / BFD	1	CMP22	W	108.81	0.00	108.81	97.00	11.81	Y

Path Voltage Drop Summary

Generation Date: 08/23/2005 06:30 pm

Battery: 22 **Node:** 11 **Circuit:** DG23-CONTR **Schematic:** A208540

Device ID	Mfgr/Model	Path	Scenario	Time	Node Voltage	Path VD	Device Voltage	Required Voltage	Voltage Delta	Y/N
86-EDG 23	UNKNOWN / UNKNOWN	1	CMP22	W	112.44	0.00	112.44	101.00	11.44	Y
86X-EDG 23	UNKNOWN / UNKNOWN	1	CMP22	W	112.44	0.00	112.44	101.00	11.44	Y
CVX-EDG 23	WHSE / MG-6	1	CMP22	W	112.44	0.00	112.44	101.00	11.44	Y
VBR-EDG 23	WHSE / CV	1	CMP22	W	112.44	0.00	112.44	101.00	11.44	Y

Path Voltage Drop Summary

Generation Date: 08/23/2005 06:30 pm

Battery: 22 **Node:** 11 **Circuit:** DG23-CONTR **Schematic:** IP2-S-000286

Device ID	Mfgr/Model	Path	Scenario	Time	Node Voltage	Path VD	Device Voltage	Required Voltage	Voltage Delta	Y/N
32X-EDG 23	UNKNOWN / UNKNOWN	1	CMP22	W	112.44	0.00	112.44	101.00	11.44	Y
51VX-EDG 23	UNKNOWN / UNKNOWN	1	CMP22	W	112.44	0.00	112.44	101.00	11.44	Y
AGA/1-EDG 23	AGASTAT / UNKNOWN	1	CMP22	W	112.44	0.00	112.44	101.00	11.44	Y
AGA/2-EDG 23	AGASTAT / UNKNOWN	1	CMP22	W	112.44	0.00	112.44	101.00	11.44	Y
ANNUNHORN-EDG 23	PANALARM / HORN FOR ANNUNCIATOR	1	CMP22	W	112.44	0.00	112.44	101.00	11.44	Y
ASR-EDG 23	UNKNOWN / UNKNOWN	1	CMP22	W	112.44	0.00	112.44	101.00	11.44	Y
ASV/1-EDG 23	ROSS / SERIES 27	1	CMP22	W	112.44	0.04	112.40	75.00	37.40	Y
ASV/2-EDG 23	ROSS / SERIES 27	1	CMP22	W	112.44	0.04	112.40	75.00	37.40	Y
CR/1-EDG 23	UNKNOWN / UNKNOWN W/ DIODE IN	1	CMP22	W	112.44	0.00	112.44	101.00	11.44	Y
CR/2-EDG 23	UNKNOWN / UNKNOWN W/ DIODE IN	1	CMP22	W	112.44	0.00	112.44	101.00	11.44	Y
EDD7	ASCO / AUTO TRANSFER P/N 30	1	CMP22	W	112.44	0.00	112.44	101.00	11.44	Y
ESR/1-EDG 23	UNKNOWN / UNKNOWN W/ DIODE IN	1	CMP22	W	112.44	0.00	112.44	101.00	11.44	Y
ESR/2-EDG 23	UNKNOWN / UNKNOWN W/ DIODE IN	1	CMP22	W	112.44	0.00	112.44	101.00	11.44	Y
ESRX/1-EDG 23	WHSE / NBFD	1	CMP22	W	112.44	0.11	112.33	101.00	11.33	Y
ESRX/1-EDG 23	WHSE / NBFD	2	CMP22	W	112.44	0.09	112.35	101.00	11.35	Y
ESRX/2-EDG 23	WHSE / NBFD	1	CMP22	W	112.44	0.11	112.33	101.00	11.33	Y
ESRX/2-EDG 23	WHSE / NBFD	2	CMP22	W	112.44	0.09	112.35	101.00	11.35	Y
ESS-EDG 23	UNKNOWN / 1 PUSHBUTTON LT	1	CMP22	W	112.44	0.00	112.44	101.00	11.44	Y
FLD FLASH-EDG 23	ALCO / FIELD FLASH	1	CMP22	W	112.44	0.00	112.44	1.00	111.44	Y
FODPR-EDG 23	UNKNOWN / UNKNOWN W/ DIODE IN	1	CMP22	W	112.44	0.00	112.44	101.00	11.44	Y
FODSR-EDG 23	UNKNOWN / UNKNOWN W/ DIODE IN	1	CMP22	W	112.44	0.00	112.44	101.00	11.44	Y
FR-EDG 23	UNKNOWN / UNKNOWN	1	CMP22	W	112.44	0.00	112.44	101.00	11.44	Y
H/HWTR-EDG 23	UNKNOWN / UNKNOWN W/ DIODE IN	1	CMP22	W	112.44	0.00	112.44	101.00	11.44	Y
HL/LOTR-EDG 23	UNKNOWN / UNKNOWN W/ DIODE IN	1	CMP22	W	112.44	0.00	112.44	101.00	11.44	Y
HLOTR/1-EDG 23	UNKNOWN / UNKNOWN W/ DIODE IN	1	CMP22	W	112.44	0.00	112.44	101.00	11.44	Y
HR-EDG 23	UNKNOWN / UNKNOWN	1	CMP22	W	112.44	0.00	112.44	101.00	11.44	Y
HWTR-EDG 23	UNKNOWN / UNKNOWN W/ DIODE IN	1	CMP22	W	112.44	0.00	112.44	101.00	11.44	Y
HWTR/1-EDG 23	UNKNOWN / UNKNOWN W/ DIODE IN	1	CMP22	W	112.44	0.00	112.44	101.00	11.44	Y
K1X-EDG 23	UNKNOWN / UNKNOWN W/ DIODE IN	1	CMP22	W	112.44	0.00	112.44	101.00	11.44	Y
LAPR-EDG 23	UNKNOWN / UNKNOWN W/ DIODE IN	1	CMP22	W	112.44	0.00	112.44	101.00	11.44	Y
LFLR-EDG 23	UNKNOWN / UNKNOWN W/ DIODE IN	1	CMP22	W	112.44	0.00	112.44	101.00	11.44	Y
LODFR-EDG 23	UNKNOWN / UNKNOWN W/ DIODE IN	1	CMP22	W	112.44	0.00	112.44	101.00	11.44	Y
LODSR-EDG 23	UNKNOWN / UNKNOWN W/ DIODE IN	1	CMP22	W	112.44	0.00	112.44	101.00	11.44	Y
NST-EDG 23	UNKNOWN / UNKNOWN TIME DELAY	1	CMP22	W	112.44	0.00	112.44	101.00	11.44	Y
OCR-EDG 23	UNKNOWN / UNKNOWN	1	CMP22	W	112.44	0.00	112.44	101.00	11.44	Y
OCT/1-EDG 23	UNKNOWN / UNKNOWN TIME DELAY	1	CMP22	W	112.44	0.00	112.44	101.00	11.44	Y
OCT/2-EDG 23	UNKNOWN / UNKNOWN TIME DELAY	1	CMP22	W	112.44	0.00	112.44	101.00	11.44	Y
OPR-EDG 23	UNKNOWN / UNKNOWN W/ DIODE IN	1	CMP22	W	112.44	0.00	112.44	101.00	11.44	Y
OPT1-EDG 23	UNKNOWN / UNKNOWN TIME DELAY	1	CMP22	W	112.44	0.00	112.44	101.00	11.44	Y
OPT2-EDG 23	UNKNOWN / UNKNOWN TIME DELAY	1	CMP22	W	112.44	0.00	112.44	101.00	11.44	Y
OSR-EDG 23	UNKNOWN / UNKNOWN W/ DIODE IN	1	CMP22	W	112.44	0.00	112.44	101.00	11.44	Y
PDT-EDG 23	UNKNOWN / UNKNOWN TIME DELAY	1	CMP22	W	112.44	0.00	112.44	101.00	11.44	Y
R1-EDG 23	WHSE / BFD	1	CMP22	W	112.44	0.00	112.44	97.00	15.44	Y
R2-EDG 23	WHSE / BFD	1	CMP22	W	112.44	0.00	112.44	97.00	15.44	Y
RR-EDG 23	UNKNOWN / UNKNOWN W/ DIODE IN	1	CMP22	W	112.44	0.00	112.44	101.00	11.44	Y

Path Voltage Drop Summary

Generation Date: 08/23/2005 06:30 pm

Battery: 22 **Node:** 11 **Circuit:** DG23-CONTR **Schematic:** IP2-S-000286

Device ID	Mfgr/Model	Path	Scenario	Time	Node Voltage	Path VD	Device Voltage	Required Voltage	Voltage Delta	Y/N
SDR-EDG 23	UNKNOWN / UNKNOWN TIME DELAY	1	CMP22	W	112.44	0.00	112.44	101.00	11.44	Y
UPR-EDG 23	UNKNOWN / UNKNOWN	1	CMP22	W	112.44	0.00	112.44	101.00	11.44	Y

Path Voltage Drop Summary

Generation Date: 08/23/2005 06:30 pm

Battery: 22 **Node:** 11 **Circuit:** DG23-CONTR **Schematic:** IP2-S-000366

Device ID	Mfgr/Model	Path	Scenario	Time	Node Voltage	Path VD	Device Voltage	Required Voltage	Voltage Delta	Y/N
JWPS(3,4)X-EDG 23	WHSE / NBFD	1	CMP22	W	112.44	0.00	112.44	101.00	11.44	Y
K1-EDG 23	WHSE / TYPE MLLO-2H	1	CMP22	W	112.44	0.00	112.44	101.00	11.44	Y
K2-EDG 23	WHSE / TYPE MLLO-2H	1	CMP22	W	112.44	0.00	112.44	101.00	11.44	Y
K4-EDG 23	UNKNOWN / UNKNOWN W/ DIODE IN	1	CMP22	W	112.44	0.00	112.44	101.00	11.44	Y

Path Voltage Drop Summary

Generation Date: 08/23/2005 06:30 pm

Battery: 22 **Node:** 12 **Circuit:** BUS 6A **Schematic:** 300925

Device ID	Mfgr/Model	Path	Scenario	Time	Node Voltage	Path VD	Device Voltage	Required Voltage	Voltage Delta	Y/N
2/SI3-SI3	UNKNOWN / UNKNOWN	1	CMP22	W	112.59	0.00	112.59	101.00	11.59	Y
52CC-SI3	WHSE / DB-50-CC	1	CMP22	W	112.59	0.00	112.59	91.00	21.59	Y
52TC-SI3	WHSE / DB-50-TC	1	CMP22	W	112.59	1.77	110.83	71.00	39.83	Y
52X-SI3	WHSE / DB-50-TC	1	CMP22	W	112.59	0.00	112.59	71.00	41.59	Y
74-SI3	WHSE / BFD	1	CMP22	W	112.59	0.00	112.59	97.00	15.59	Y

Path Voltage Drop Summary

Generation Date: 08/23/2005 06:30 pm

Battery: 22 **Node:** 12 **Circuit:** BUS 6A **Schematic:** 9321-LL-3118 SH 03B

Device ID	Mfgr/Model	Path	Scenario	Time	Node Voltage	Path VD	Device Voltage	Required Voltage	Voltage Delta	Y/N
27-S1/6A-6A	ABB / TYPE 27N, SERIES 411	1	CMP22	W	112.59	0.00	112.59	101.00	11.59	Y
27-S2/6A-6A	ABB / TYPE 27N, SERIES 411	1	CMP22	W	112.59	0.00	112.59	101.00	11.59	Y
47X-SG22-U13A	WHSE / SG	1	CMP22	W	112.59	0.00	112.59	101.00	11.59	Y
62-1/6A-6A	AGASTAT / UNKNOWN	1	CMP22	W	112.59	0.00	112.59	101.00	11.59	Y
62/6A-6A	AGASTAT / UNKNOWN	1	CMP22	W	112.59	0.00	112.59	101.00	11.59	Y

Path Voltage Drop Summary

Generation Date: 08/23/2005 06:30 pm

Battery: 22 **Node:** 12 **Circuit:** BUS 6A **Schematic:** 9321-LL-3118 SH 04

Device ID	Mfgr/Model	Path	Scenario	Time	Node Voltage	Path VD	Device Voltage	Required Voltage	Voltage Delta	Y/N
13BX/O-6A	UNKNOWN / UNKNOWN	1	CMP22	W	112.59	0.00	112.59	101.00	11.59	Y
13BX/R-6A	UNKNOWN / UNKNOWN	1	CMP22	W	112.59	0.00	112.59	101.00	11.59	Y
52CC-6A	WHSE / DB-75-CC	1	CMP22	W	112.59	0.00	112.59	91.00	21.59	Y
52TC-6A	WHSE / DB-75-TC	1	CMP22	W	112.59	0.00	112.59	71.00	41.59	Y
52X-6A	WHSE / X- CLOSING RELAY (0.	1	CMP22	W	112.59	0.00	112.59	91.00	21.59	Y
74/6A-6A	WHSE / BFD	1	CMP22	W	112.59	0.00	112.59	97.00	15.59	Y

Path Voltage Drop Summary

Generation Date: 08/23/2005 06:30 pm

Battery: 22 **Node:** 12 **Circuit:** BUS 6A **Schematic:** 9321-LL-3118 SH 05

Device ID	Mfgr/Model	Path	Scenario	Time	Node Voltage	Path VD	Device Voltage	Required Voltage	Voltage Delta	Y/N
52CC-3AT6A	WHSE / DB-75-CC	1	CMP22	W	112.59	0.00	112.59	91.00	21.59	Y
52LO-3AT6A	UNKNOWN / UNKNOWN	1	CMP22	W	112.59	0.00	112.59	101.00	11.59	Y
52TC-3AT6A	WHSE / DB-75-TC	1	CMP22	W	112.59	0.00	112.59	71.00	41.59	Y
52X-3AT6A	WHSE / X- CLOSING RELAY (0.	1	CMP22	W	112.59	0.00	112.59	91.00	21.59	Y
74/3AT6A-3AT6A	WHSE / BFD	1	CMP22	W	112.59	0.00	112.59	97.00	15.59	Y
7BX/O-3AT6A	UNKNOWN / UNKNOWN	1	CMP22	W	112.59	0.00	112.59	101.00	11.59	Y
7BX/R-3AT6A	UNKNOWN / UNKNOWN	1	CMP22	W	112.59	0.00	112.59	101.00	11.59	Y
7BX1/O-3AT6A	UNKNOWN / UNKNOWN	1	CMP22	W	112.59	0.00	112.59	101.00	11.59	Y
7BX1/R-3AT6A	UNKNOWN / UNKNOWN	1	CMP22	W	112.59	0.00	112.59	101.00	11.59	Y

Path Voltage Drop Summary

Generation Date: 08/23/2005 06:30 pm

Battery: 22 **Node:** 12 **Circuit:** BUS 6A **Schematic:** 9321-LL-3118 SH 07

Device ID	Mfgr/Model	Path	Scenario	Time	Node Voltage	Path VD	Device Voltage	Required Voltage	Voltage Delta	Y/N
13CX/O-EG3	UNKNOWN / UNKNOWN	1	CMP22	W	112.59	0.00	112.59	101.00	11.59	Y
13CX/R-EG3	UNKNOWN / UNKNOWN	1	CMP22	W	112.59	0.00	112.59	101.00	11.59	Y
13CX1/O-EG3	UNKNOWN / UNKNOWN	1	CMP22	W	112.59	0.00	112.59	101.00	11.59	Y
13CX1/R-EG3	UNKNOWN / UNKNOWN	1	CMP22	W	112.59	0.00	112.59	101.00	11.59	Y
52CC-EG3	WHSE / DB-75-CC	1	CMP22	W	112.59	0.00	112.59	91.00	21.59	Y
52TC-EG3	WHSE / DB-75-TC	1	CMP22	W	112.59	0.00	112.59	71.00	41.59	Y
52X-EG3	WHSE / X- CLOSING RELAY (0.	1	CMP22	W	112.59	0.00	112.59	91.00	21.59	Y
74/EG3-EG3	WHSE / BFD	1	CMP22	W	112.59	0.00	112.59	97.00	15.59	Y

Path Voltage Drop Summary

Generation Date: 08/23/2005 06:30 pm

Battery: 22 **Node:** 12 **Circuit:** BUS 6A **Schematic:** 9321-LL-3118 SH 09

Device ID	Mfgr/Model	Path	Scenario	Time	Node Voltage	Path VD	Device Voltage	Required Voltage	Voltage Delta	Y/N
52CC-MCC6B	WHSE / DB-50-CC	1	CMP22	W	112.59	0.00	112.59	91.00	21.59	Y
52TC-MCC6B	WHSE / DB-50-TC	1	CMP22	W	112.59	0.00	112.59	71.00	41.59	Y
52X-MCC6B	WHSE / X- CLOSING RELAY (0.	1	CMP22	W	112.59	0.00	112.59	91.00	21.59	Y

Path Voltage Drop Summary

Generation Date: 08/23/2005 06:30 pm

Battery: 22 **Node:** 12 **Circuit:** BUS 6A **Schematic:** 9321-LL-3118 SH 10

Device ID	Mfgr/Model	Path	Scenario	Time	Node Voltage	Path VD	Device Voltage	Required Voltage	Voltage Delta	Y/N
52CC-LTIE	WHSE / DB-50-CC	1	CMP22	W	112.59	0.00	112.59	91.00	21.59	Y
52CC-MCC7A	WHSE / DB-50-CC	1	CMP22	W	112.59	0.00	112.59	91.00	21.59	Y
52TC-LTIE	WHSE / DB-50-TC	1	CMP22	W	112.59	0.00	112.59	71.00	41.59	Y
52TC-MCC7A	WHSE / DB-50-TC	1	CMP22	W	112.59	0.00	112.59	71.00	41.59	Y
52X-LTIE	WHSE / X- CLOSING RELAY (0.	1	CMP22	W	112.59	0.00	112.59	91.00	21.59	Y
52X-MCC7A	WHSE / X- CLOSING RELAY (0.	1	CMP22	W	112.59	0.00	112.59	91.00	21.59	Y

Path Voltage Drop Summary

Generation Date: 08/23/2005 06:30 pm

Battery: 22 **Node:** 12 **Circuit:** BUS 6A **Schematic:** 9321-LL-3118 SH 16

Device ID	Mfgr/Model	Path	Scenario	Time	Node Voltage	Path VD	Device Voltage	Required Voltage	Voltage Delta	Y/N
2-1/AF3-AF3	UNKNOWN / UNKNOWN	1	CMP22	W	112.59	0.00	112.59	101.00	11.59	Y
2-2/AF3-AF3	A-B / 700-RTC	1	CMP22	W	112.59	0.00	112.59	97.00	15.59	Y
52CC-AF3	WHSE / DB-50-CC	1	CMP22	W	112.59	0.00	112.59	91.00	21.59	Y
52TC-AF3	WHSE / DB-50-TC	1	CMP22	W	112.59	0.00	112.59	71.00	41.59	Y
52X-AF3	WHSE / X- CLOSING RELAY (0.	1	CMP22	W	112.59	0.00	112.59	91.00	21.59	Y
74/AF3-AF3	WHSE / BFD	1	CMP22	W	112.59	0.00	112.59	97.00	15.59	Y
BFD/3-AF3	UNKNOWN / UNKNOWN	1	CMP22	W	112.59	0.00	112.59	101.00	11.59	Y

Path Voltage Drop Summary

Generation Date: 08/23/2005 06:30 pm

Battery: 22 **Node:** 12 **Circuit:** BUS 6A **Schematic:** 9321-LL-3118 SH 18

Device ID	Mfgr/Model	Path	Scenario	Time	Node Voltage	Path VD	Device Voltage	Required Voltage	Voltage Delta	Y/N
52CC-TAO	WHSE / DB-50-CC	1	CMP22	W	112.59	0.00	112.59	91.00	21.59	Y
52TC-TAO	WHSE / DB-50-TC	1	CMP22	W	112.59	0.00	112.59	71.00	41.59	Y
52X-TAO	WHSE / X- CLOSING RELAY (0.	1	CMP22	W	112.59	0.00	112.59	91.00	21.59	Y
74/TAO-TAO	WHSE / BFD	1	CMP22	W	112.59	0.00	112.59	97.00	15.59	Y
86/TAO-TAO	WHSE / BFD	1	CMP22	W	112.59	0.00	112.59	97.00	15.59	Y
BFD/1-TAO	UNKNOWN / UNKNOWN	1	CMP22	W	112.59	0.00	112.59	101.00	11.59	Y

Path Voltage Drop Summary

Generation Date: 08/23/2005 06:30 pm

Battery: 22 **Node:** 12 **Circuit:** BUS 6A **Schematic:** A208088

Device ID	Mfgr/Model	Path	Scenario	Time	Node Voltage	Path VD	Device Voltage	Required Voltage	Voltage Delta	Y/N
EDD1	ASCO / AUTO TRANSFER P/N 30	1	CMP22	W	112.59	0.00	112.59	101.00	11.59	Y

Path Voltage Drop Summary

Generation Date: 08/23/2005 06:30 pm

Battery: 22 **Node:** 12 **Circuit:** BUS 6A **Schematic:** B225131

Device ID	Mfgr/Model	Path	Scenario	Time	Node Voltage	Path VD	Device Voltage	Required Voltage	Voltage Delta	Y/N
52CC-MG2	WHSE / DB-50-CC	1	CMP22	W	112.59	0.00	112.59	91.00	21.59	Y
52TC-MG2	WHSE / DB-50-TC	1	CMP22	W	112.59	0.00	112.59	71.00	41.59	Y
52X-MG2	WHSE / X- CLOSING RELAY (0,	1	CMP22	W	112.59	0.00	112.59	91.00	21.59	Y
74/2-MG2	WHSE / BFD	1	CMP22	W	112.59	0.00	112.59	97.00	15.59	Y

Path Voltage Drop Summary

Generation Date: 08/23/2005 06:30 pm

Battery: 22 **Node:** 12 **Circuit:** BUS 6A **Schematic:** B225132

Device ID	Mfgr/Model	Path	Scenario	Time	Node Voltage	Path VD	Device Voltage	Required Voltage	Voltage Delta	Y/N
2/C3	AGASTAT / 7000 SERIES	1	CMP22	W	112.59	0.00	112.59	101.00	11.59	Y
52CC-C3	WHSE / DB-50-CC	1	CMP22	W	112.59	0.00	112.59	91.00	21.59	Y
52TC-C3	WHSE / DB-50-TC	1	CMP22	W	112.59	7.60	104.99	71.00	33.99	Y
52X-C3	WHSE / X- CLOSING RELAY (0.	1	CMP22	W	112.59	0.00	112.59	91.00	21.59	Y

Path Voltage Drop Summary

Generation Date: 08/23/2005 06:30 pm

Battery: 22 **Node:** 12 **Circuit:** BUS 6A **Schematic:** B225137

Device ID	Mfgr/Model	Path	Scenario	Time	Node Voltage	Path VD	Device Voltage	Required Voltage	Voltage Delta	Y/N
2/RHR2	UNKNOWN / UNKNOWN	1	CMP22	W	112.59	0.00	112.59	101.00	11.59	Y
52CC-RHR2	WHSE / DB-50-CC	1	CMP22	W	112.59	0.00	112.59	91.00	21.59	Y
52TC-RHR2	WHSE / DB-50-TC	1	CMP22	W	112.59	0.00	112.59	71.00	41.59	Y
52X-RHR2	WHSE / X- CLOSING RELAY (0.	1	CMP22	W	112.59	0.00	112.59	91.00	21.59	Y
74-RHR2	WHSE / BFD	1	CMP22	W	112.59	0.00	112.59	97.00	15.59	Y

Path Voltage Drop Summary

Generation Date: 08/23/2005 06:30 pm

Battery: 22 **Node:** 12 **Circuit:** BUS 6A **Schematic:** B225142

Device ID	Mfgr/Model	Path	Scenario	Time	Node Voltage	Path VD	Device Voltage	Required Voltage	Voltage Delta	Y/N
52CC-R2	WHSE / DB-50-CC	1	CMP22	W	112.59	0.00	112.59	91.00	21.59	Y
52TC-R2	WHSE / DB-50-TC	1	CMP22	W	112.59	0.00	112.59	71.00	41.59	Y
52X-R2	WHSE / X- CLOSING RELAY (0.	1	CMP22	W	112.59	0.00	112.59	91.00	21.59	Y
74-R2	WHSE / BFD	1	CMP22	W	112.59	0.00	112.59	97.00	15.59	Y

Path Voltage Drop Summary

Generation Date: 08/23/2005 06:30 pm

Battery: 22 **Node:** 12 **Circuit:** BUS 6A **Schematic:** B225143

Device ID	Mfgr/Model	Path	Scenario	Time	Node Voltage	Path VD	Device Voltage	Required Voltage	Voltage Delta	Y/N
2/CRF5	UNKNOWN / UNKNOWN	1	CMP22	W	112.59	0.00	112.59	101.00	11.59	Y
52CC-CRF5	WHSE / DB-50-CC	1	CMP22	W	112.59	0.00	112.59	91.00	21.59	Y
52TC-CRF5	WHSE / DB-50-TC	1	CMP22	W	112.59	0.00	112.59	71.00	41.59	Y
52X-CRF5	WHSE / X- CLOSING RELAY (0.	1	CMP22	W	112.59	0.00	112.59	91.00	21.59	Y
74-CRF5	UNKNOWN / UNKNOWN	1	CMP22	W	112.59	0.00	112.59	101.00	11.59	Y

Path Voltage Drop Summary

Generation Date: 08/23/2005 06:30 pm

Battery: 22 **Node:** 12 **Circuit:** BUS 6A **Schematic:** B225144

Device ID	Mfgr/Model	Path	Scenario	Time	Node Voltage	Path VD	Device Voltage	Required Voltage	Voltage Delta	Y/N
52CC-PC	WHSE / DB-50-CC	1	CMP22	W	112.59	0.00	112.59	91.00	21.59	Y
52TC-PC	WHSE / DB-50-TC	1	CMP22	W	112.59	0.00	112.59	71.00	41.59	Y
52X-PC	WHSE / X- CLOSING RELAY (0.	1	CMP22	W	112.59	0.00	112.59	91.00	21.59	Y

Path Voltage Drop Summary

Generation Date: 08/23/2005 06:30 pm

Battery: 22 **Node:** 12 **Circuit:** BUS 6A **Schematic:** B225146

Device ID	Mfgr/Model	Path	Scenario	Time	Node Voltage	Path VD	Device Voltage	Required Voltage	Voltage Delta	Y/N
2/CS2-CS2	UNKNOWN / UNKNOWN	1	CMP22	W	112.59	0.00	112.59	101.00	11.59	Y
52CC-CS2	WHSE / DB-50-CC	1	CMP22	W	112.59	0.00	112.59	91.00	21.59	Y
52TC-CS2	WHSE / DB-50-TC	1	CMP22	W	112.59	1.84	110.75	71.00	39.75	Y
52X-CS2	WHSE / X- CLOSING RELAY (0.	1	CMP22	W	112.59	0.00	112.59	91.00	21.59	Y
74-CS2	WHSE / BFD	1	CMP22	W	112.59	0.00	112.59	97.00	15.59	Y

Path Voltage Drop Summary

Generation Date: 08/23/2005 06:30 pm

Battery: 22 **Node:** 12 **Circuit:** BUS 6A **Schematic:** B225149

Device ID	Mfgr/Model	Path	Scenario	Time	Node Voltage	Path VD	Device Voltage	Required Voltage	Voltage Delta	Y/N
2/SW3-SW3	UNKNOWN / UNKNOWN	1	CMP22	W	112.59	0.00	112.59	101.00	11.59	Y
52CC-SW3	WHSE / DB-50-CC	1	CMP22	W	112.59	0.00	112.59	91.00	21.59	Y
52TC-SW3	WHSE / DB-50-TC	1	CMP22	W	112.59	0.00	112.59	71.00	41.59	Y
52X-SW3	WHSE / X-CLOSING RELAY (0.	1	CMP22	W	112.59	0.00	112.59	91.00	21.59	Y
74/SW3	UNKNOWN / UNKNOWN	1	CMP22	W	112.59	0.00	112.59	101.00	11.59	Y
M-SW3	UNKNOWN / TIME METER	1	CMP22	W	112.59	0.00	112.59	101.00	11.59	Y
S8C-SW3	UNKNOWN / UNKNOWN	1	CMP22	W	112.59	0.00	112.59	101.00	11.59	Y

Path Voltage Drop Summary

Generation Date: 08/23/2005 06:30 pm

Battery: 22 **Node:** 12 **Circuit:** BUS 6A **Schematic:** B225151

Device ID	Mfgr/Model	Path	Scenario	Time	Node Voltage	Path VD	Device Voltage	Required Voltage	Voltage Delta	Y/N
52CC-CC3	WHSE / DB-50-CC	1	CMP22	W	112.59	0.00	112.59	91.00	21.59	Y
52TC-CC3	WHSE / DB-50-TC	1	CMP22	W	112.59	0.00	112.59	71.00	41.59	Y
52X-CC3	WHSE / X- CLOSING RELAY (0.	1	CMP22	W	112.59	0.00	112.59	91.00	21.59	Y
74-CC3	UNKNOWN / UNKNOWN	1	CMP22	W	112.59	0.00	112.59	101.00	11.59	Y
86-CC3	UNKNOWN / UNKNOWN	1	CMP22	W	112.59	0.00	112.59	101.00	11.59	Y
CC3-2TD-CC3	UNKNOWN / UNKNOWN	1	CMP22	W	112.59	0.00	112.59	101.00	11.59	Y

Path Voltage Drop Summary

Generation Date: 08/23/2005 06:30 pm

Battery: 22 **Node:** 12 **Circuit:** BUS 6A **Schematic:** IP2-S-000194

Device ID	Mfgr/Model	Path	Scenario	Time	Node Voltage	Path VD	Device Voltage	Required Voltage	Voltage Delta	Y/N
2/SW6-SW6	UNKNOWN / UNKNOWN	1	CMP22	W	112.59	0.00	112.59	101.00	11.59	Y
52CC-SW6	WHSE / DB-50-CC	1	CMP22	W	112.59	0.00	112.59	91.00	21.59	Y
52TC-SW6	WHSE / DB-50-TC	1	CMP22	W	112.59	0.00	112.59	71.00	41.59	Y
52X-SW6	WHSE / X- CLOSING RELAY (0.	1	CMP22	W	112.59	0.00	112.59	91.00	21.59	Y
74/SW6	UNKNOWN / UNKNOWN	1	CMP22	W	112.59	0.00	112.59	101.00	11.59	Y
M-SW6	UNKNOWN / TIME METER	1	CMP22	W	112.59	0.00	112.59	101.00	11.59	Y
S8B-SW6	UNKNOWN / UNKNOWN	1	CMP22	W	112.59	0.00	112.59	101.00	11.59	Y

Path Voltage Drop Summary

Generation Date: 08/23/2005 06:30 pm

Battery: 22 **Node:** 13 **Circuit:** PP22-07 **Schematic:** IP2--S-000054

Device ID	Mfgr/Model	Path	Scenario	Time	Node Voltage	Path VD	Device Voltage	Required Voltage	Voltage Delta	Y/N
GEN REG INV1	UNKNOWN / GEN REG. INVERTER	1	CMP22	W	108.97	0.00	108.97	105.00	3.97	Y

Path Voltage Drop Summary

Generation Date: 08/23/2005 06:30 pm

Battery: 22 **Node:** 14 **Circuit:** PP22-09 **Schematic:** 9321-LL-3114 SH 02

Device ID	Mfgr/Model	Path	Scenario	Time	Node Voltage	Path VD	Device Voltage	Required Voltage	Voltage Delta	Y/N
52CC-UT3	WHSE / 75DH500-CC	1	CMP22	W	105.91	0.00	105.91	76.00	29.91	Y
52TC-UT3	WHSE / 75DH500-TC	1	CMP22	01	114.57	0.00	114.57	71.00	43.57	Y
52X-UT3	WHSE / 75DH500 Solenoid Ope	1	CMP22	W	105.91	0.00	105.91	76.00	29.91	Y
52Y-UT3	UNKNOWN / Y- CUT-OFF RELAY/S 0	1	CMP22	W	105.91	0.00	105.91	101.00	4.91	Y

Path Voltage Drop Summary

Generation Date: 08/23/2005 06:30 pm

Battery: 22 **Node:** 14 **Circuit:** PP22-09 **Schematic:** 9321-LL-3114 SH 03

Device ID	Mfgr/Model	Path	Scenario	Time	Node Voltage	Path VD	Device Voltage	Required Voltage	Voltage Delta	Y/N
52M-UT3-ST6	WHSE / M-SPRING CHARGING MT	1	CMP22	04	114.64	0.00	114.64	91.00	23.64	Y
52M-UT3-ST6	WHSE / M-SPRING CHARGING MT	1	CMP22	05	114.64	0.00	114.64	91.00	23.64	Y
52M-UT3-ST6	WHSE / M-SPRING CHARGING MT	1	CMP22	06	114.61	0.00	114.61	91.00	23.61	Y
52M-UT3-ST6	WHSE / M-SPRING CHARGING MT	1	CMP22	07	114.64	0.00	114.64	91.00	23.64	Y
52M-UT3-ST6-I	WHSE / M-SPRING CHARGING MT	1	CMP22	03	109.19	0.00	109.19	91.00	18.19	Y
52MR-UT3-ST6	UNKNOWN / MR- MECH RELEASE REL	1	CMP22	W	105.91	0.00	105.91	101.00	4.91	Y
52MX-UT3-ST6	UNKNOWN / MX-CHARGING MTR AUX	1	CMP22	02	114.75	0.00	114.75	101.00	13.75	Y
52MX-UT3-ST6	UNKNOWN / MX-CHARGING MTR AUX	1	CMP22	03	109.19	0.00	109.19	101.00	8.19	Y
52MX-UT3-ST6	UNKNOWN / MX-CHARGING MTR AUX	1	CMP22	36	112.06	0.00	112.06	101.00	11.06	Y
52MX-UT3-ST6	UNKNOWN / MX-CHARGING MTR AUX	1	CMP22	37	109.28	0.00	109.28	101.00	8.28	Y
52TC-UT3-ST6	WHSE / 75DH500-TC	1	CMP22	W	105.91	0.00	105.91	71.00	34.91	Y
52X-UT3-ST6	WHSE / 75DH500 Stored Energ	1	CMP22	02	114.75	4.56	110.19	91.00	19.19	Y
52X-UT3-ST6	WHSE / 75DH500 Stored Energ	1	CMP22	03	109.19	4.34	104.86	91.00	13.86	Y
52X-UT3-ST6	WHSE / 75DH500 Stored Energ	1	CMP22	36	112.06	4.45	107.61	91.00	16.61	Y
52X-UT3-ST6	WHSE / 75DH500 Stored Energ	1	CMP22	37	109.28	4.34	104.94	91.00	13.94	Y
52Y-UT3-ST6	UNKNOWN / Y- CUT-OFF RELAYS 0	1	CMP22	02	114.75	0.00	114.75	101.00	13.75	Y
52Y-UT3-ST6	UNKNOWN / Y- CUT-OFF RELAYS 0	1	CMP22	03	109.19	0.00	109.19	101.00	8.19	Y
52Y-UT3-ST6	UNKNOWN / Y- CUT-OFF RELAYS 0	1	CMP22	04	114.64	0.00	114.64	101.00	13.64	Y
52Y-UT3-ST6	UNKNOWN / Y- CUT-OFF RELAYS 0	1	CMP22	05	114.64	0.00	114.64	101.00	13.64	Y
52Y-UT3-ST6	UNKNOWN / Y- CUT-OFF RELAYS 0	1	CMP22	06	114.61	0.00	114.61	101.00	13.61	Y
52Y-UT3-ST6	UNKNOWN / Y- CUT-OFF RELAYS 0	1	CMP22	07	114.64	0.00	114.64	101.00	13.64	Y
52Y-UT3-ST6	UNKNOWN / Y- CUT-OFF RELAYS 0	1	CMP22	36	112.06	0.00	112.06	101.00	11.06	Y
52Y-UT3-ST6	UNKNOWN / Y- CUT-OFF RELAYS 0	1	CMP22	37	109.28	0.00	109.28	101.00	8.28	Y

Path Voltage Drop Summary

Generation Date: 08/23/2005 06:30 pm

Battery: 22 **Node:** 14 **Circuit:** PP22-09 **Schematic:** 9321-LL-3114 SH 04

Device ID	Mfgr/Model	Path	Scenario	Time	Node Voltage	Path VD	Device Voltage	Required Voltage	Voltage Delta	Y/N
52CC-UT4	WHSE / 75DH500-CC	1	CMP22	W	105.91	0.00	105.91	76.00	29.91	Y
52TC-UT4	WHSE / 75DH500-TC	1	CMP22	01	114.57	0.00	114.57	71.00	43.57	Y
52X-UT4	WHSE / 75DH500 Solenoid Ope	1	CMP22	W	105.91	0.00	105.91	76.00	29.91	Y
52Y-UT4	UNKNOWN / Y- CUT-OFF RELAY/S.O.	1	CMP22	W	105.91	0.00	105.91	101.00	4.91	Y

Path Voltage Drop Summary

Generation Date: 08/23/2005 06:30 pm

Battery: 22 **Node:** 14 **Circuit:** PP22-09 **Schematic:** 9321-LL-3114 SH 05

Device ID	Mfgr/Model	Path	Scenario	Time	Node Voltage	Path VD	Device Voltage	Required Voltage	Voltage Delta	Y/N
52M-UT4-ST6	WHSE / M-SPRING CHARGING MT	1	CMP22	04	114.64	0.00	114.64	91.00	23.64	Y
52M-UT4-ST6	WHSE / M-SPRING CHARGING MT	1	CMP22	05	114.64	0.00	114.64	91.00	23.64	Y
52M-UT4-ST6	WHSE / M-SPRING CHARGING MT	1	CMP22	06	114.61	0.00	114.61	91.00	23.61	Y
52M-UT4-ST6	WHSE / M-SPRING CHARGING MT	1	CMP22	07	114.64	0.00	114.64	91.00	23.64	Y
52M-UT4-ST6-I	WHSE / M-SPRING CHARGING MT	1	CMP22	03	109.19	0.00	109.19	91.00	18.19	Y
52MR-UT4-ST6	UNKNOWN / MR- MECH RELEASE REL	1	CMP22	W	105.91	0.00	105.91	101.00	4.91	Y
52MX-UT4-ST6	UNKNOWN / MX-CHARGING MTR AUX	1	CMP22	02	114.75	0.00	114.75	101.00	13.75	Y
52MX-UT4-ST6	UNKNOWN / MX-CHARGING MTR AUX	1	CMP22	03	109.19	0.00	109.19	101.00	8.19	Y
52TC-UT4-ST6	WHSE / 75DH500-TC	1	CMP22	W	105.91	0.00	105.91	71.00	34.91	Y
52X-UT4-ST6	WHSE / 75DH500 Stored Energ	1	CMP22	02	114.75	4.10	110.65	91.00	19.65	Y
52X-UT4-ST6	WHSE / 75DH500 Stored Energ	1	CMP22	03	109.19	3.90	105.29	91.00	14.29	Y
52Y-UT4-ST6	UNKNOWN / Y- CUT-OFF RELAY/6 0	1	CMP22	02	114.75	0.00	114.75	101.00	13.75	Y
52Y-UT4-ST6	UNKNOWN / Y- CUT-OFF RELAY/6 0	1	CMP22	03	109.19	0.00	109.19	101.00	8.19	Y
52Y-UT4-ST6	UNKNOWN / Y- CUT-OFF RELAY/6 0	1	CMP22	04	114.64	0.00	114.64	101.00	13.64	Y
52Y-UT4-ST6	UNKNOWN / Y- CUT-OFF RELAY/6 0	1	CMP22	05	114.64	0.00	114.64	101.00	13.64	Y
52Y-UT4-ST6	UNKNOWN / Y- CUT-OFF RELAY/6 0	1	CMP22	06	114.61	0.00	114.61	101.00	13.61	Y
52Y-UT4-ST6	UNKNOWN / Y- CUT-OFF RELAY/6 0	1	CMP22	07	114.64	0.00	114.64	101.00	13.64	Y

Path Voltage Drop Summary

Generation Date: 08/23/2005 06:30 pm

Battery: 22 **Node:** 14 **Circuit:** PP22-09 **Schematic:** 9321-LL-3114 SH 06

Device ID	Mfgr/Model	Path	Scenario	Time	Node Voltage	Path VD	Device Voltage	Required Voltage	Voltage Delta	Y/N
52CC-ST6	WHSE / 75DH500-CC	1	CMP22	35	105.91	0.00	105.91	76.00	29.91	Y
52TC-ST6	WHSE / 75DH500-TC	1	CMP22	01	114.57	0.00	114.57	71.00	43.57	Y
52X-ST6	WHSE / 75DH500 Solenoid Ope	1	CMP22	34	112.35	0.00	112.35	76.00	36.35	Y
52X-ST6	WHSE / 75DH500 Solenoid Ope	1	CMP22	35	105.91	0.00	105.91	76.00	29.91	Y
52Y-ST6	UNKNOWN / Y- CUT-OFF RELAYS 0	1	CMP22	34	112.35	0.00	112.35	101.00	11.35	Y
52Y-ST6	UNKNOWN / Y- CUT-OFF RELAYS 0	1	CMP22	35	105.91	0.00	105.91	101.00	4.91	Y

Path Voltage Drop Summary

Generation Date: 08/23/2005 06:30 pm

Battery: 22 **Node:** 14 **Circuit:** PP22-09 **Schematic:** 9321-LL-3114 SH 07

Device ID	Mfgr/Model	Path	Scenario	Time	Node Voltage	Path VD	Device Voltage	Required Voltage	Voltage Delta	Y/N
52CC-RCP23	WHSE / 75DH500-CC	1	CMP22	W	105.91	0.00	105.91	76.00	29.91	Y
52TC-RCP23	WHSE / 75DH500-TC	1	CMP22	18	112.94	0.00	112.94	71.00	41.94	Y
52TC-RCP23	WHSE / 75DH500-TC	1	CMP22	19	112.94	0.00	112.94	71.00	41.94	Y
52X-RCP23	WHSE / 75DH500 Solenoid Ope	1	CMP22	W	105.91	0.00	105.91	76.00	29.91	Y
52Y-RCP23	UNKNOWN / Y- CUT-OFF RELAYS 0	1	CMP22	W	105.91	0.00	105.91	101.00	4.91	Y
S4-RCP23	UNKNOWN / UNKNOWN	1	CMP22	W	105.91	0.00	105.91	101.00	4.91	Y

Path Voltage Drop Summary

Generation Date: 08/23/2005 06:30 pm

Battery: 22 **Node:** 14 **Circuit:** PP22-09 **Schematic:** 9321-LL-3114 SH 09

Device ID	Mfgr/Model	Path	Scenario	Time	Node Voltage	Path VD	Device Voltage	Required Voltage	Voltage Delta	Y/N
52CC-HDP21	WHSE / 75DH500-CC	1	CMP22	W	105.91	0.00	105.91	76.00	29.91	Y
52TC-HDP21	WHSE / 75DH500-TC	1	CMP22	18	112.94	0.00	112.94	71.00	41.94	Y
52TC-HDP21	WHSE / 75DH500-TC	1	CMP22	19	112.94	0.00	112.94	71.00	41.94	Y
52X-HDP21	WHSE / 75DH500 Solenoid Ope	1	CMP22	W	105.91	0.00	105.91	76.00	29.91	Y
52Y-HDP21	UNKNOWN / Y- CUT-OFF RELAY(S.O.	1	CMP22	W	105.91	0.00	105.91	101.00	4.91	Y

Path Voltage Drop Summary

Generation Date: 08/23/2005 06:30 pm

Battery: 22 **Node:** 14 **Circuit:** PP22-09 **Schematic:** 9321-LL-3114 SH 10

Device ID	Mfgr/Model	Path	Scenario	Time	Node Voltage	Path VD	Device Voltage	Required Voltage	Voltage Delta	Y/N
52CC-SS3	WHSE / 75DH500-CC	1	CMP22	W	105.91	0.00	105.91	76.00	29.91	Y
52TC-SS3	WHSE / 75DH500-TC	1	CMP22	18	112.94	0.00	112.94	71.00	41.94	Y
52TC-SS3	WHSE / 75DH500-TC	1	CMP22	19	112.94	0.00	112.94	71.00	41.94	Y
52X-SS3	WHSE / 75DH500 Solenoid Ope	1	CMP22	W	105.91	0.00	105.91	76.00	29.91	Y
52Y-SS3	UNKNOWN / Y- CUT-OFF RELAY(S)	1	CMP22	W	105.91	0.00	105.91	101.00	4.91	Y

Path Voltage Drop Summary

Generation Date: 08/23/2005 06:30 pm

Battery: 22 **Node:** 14 **Circuit:** PP22-09 **Schematic:** 9321-LL-3114 SH 11

Device ID	Mfgr/Model	Path	Scenario	Time	Node Voltage	Path VD	Device Voltage	Required Voltage	Voltage Delta	Y/N
52CC-RCP22	WHSE / 75DH500-CC	1	CMP22	W	105.91	0.00	105.91	76.00	29.91	Y
52TC-RCP22	WHSE / 75DH500-TC	1	CMP22	18	112.94	0.00	112.94	71.00	41.94	Y
52TC-RCP22	WHSE / 75DH500-TC	1	CMP22	19	112.94	0.00	112.94	71.00	41.94	Y
52X-RCP22	WHSE / 75DH500 Solenoid Ope	1	CMP22	W	105.91	0.00	105.91	76.00	29.91	Y
52Y-RCP22	UNKNOWN / Y- CUT-OFF RELAYS 0	1	CMP22	W	105.91	0.00	105.91	101.00	4.91	Y
S9-RCP22	UNKNOWN / UNKNOWN	1	CMP22	W	105.91	0.00	105.91	101.00	4.91	Y

Path Voltage Drop Summary

Generation Date: 08/23/2005 06:30 pm

Battery: 22 **Node:** 14 **Circuit:** PP22-09 **Schematic:** 9321-LL-3114 SH 12

Device ID	Mfgr/Model	Path	Scenario	Time	Node Voltage	Path VD	Device Voltage	Required Voltage	Voltage Delta	Y/N
52CC-CP23	WHSE / 75DH500-CC	1	CMP22	W	105.91	0.00	105.91	76.00	29.91	Y
52TC-CP23	WHSE / 75DH500-TC	1	CMP22	18	112.94	0.00	112.94	71.00	41.94	Y
52TC-CP23	WHSE / 75DH500-TC	1	CMP22	19	112.94	0.00	112.94	71.00	41.94	Y
52X-CP23	WHSE / 75DH500 Solenoid Ope	1	CMP22	W	105.91	0.00	105.91	76.00	29.91	Y
52Y-CP23	UNKNOWN / Y- CUT-OFF RELAYS	1	CMP22	W	105.91	0.00	105.91	101.00	4.91	Y
CPAS/23-CP23	UNKNOWN / UNKNOWN	1	CMP22	W	105.91	0.00	105.91	101.00	4.91	Y

Path Voltage Drop Summary

Generation Date: 08/23/2005 06:30 pm

Battery: 22 **Node:** 14 **Circuit:** PP22-09 **Schematic:** 9321-LL-3114 SH 14

Device ID	Mfgr/Model	Path	Scenario	Time	Node Voltage	Path VD	Device Voltage	Required Voltage	Voltage Delta	Y/N
52CC-HDP22	WHSE / 75DH500-CC	1	CMP22	W	105.91	0.00	105.91	76.00	29.91	Y
52TC-HDP22	WHSE / 75DH500-TC	1	CMP22	18	112.94	0.00	112.94	71.00	41.94	Y
52TC-HDP22	WHSE / 75DH500-TC	1	CMP22	19	112.94	0.00	112.94	71.00	41.94	Y
52X-HDP22	WHSE / 75DH500 Solenoid Ope	1	CMP22	W	105.91	0.00	105.91	76.00	29.91	Y
52Y-HDP22	UNKNOWN / Y- CUT-OFF RELAY/6-0	1	CMP22	W	105.91	0.00	105.91	101.00	4.91	Y

Path Voltage Drop Summary

Generation Date: 08/23/2005 06:30 pm

Battery: 22 **Node:** 14 **Circuit:** PP22-09 **Schematic:** 9321-LL-3114 SH 17

Device ID	Mfgr/Model	Path	Scenario	Time	Node Voltage	Path VD	Device Voltage	Required Voltage	Voltage Delta	Y/N
62/ST6	UNKNOWN / TD-53 TIME DELAY	1	CMP22	W	105.91	0.00	105.91	101.00	4.91	Y
62/UT3	UNKNOWN / TD-53 TIME DELAY	1	CMP22	W	105.91	0.00	105.91	101.00	4.91	Y
62/UT4	UNKNOWN / TD-53 TIME DELAY	1	CMP22	W	105.91	0.00	105.91	101.00	4.91	Y
86/ST6	WHSE / TYPE WL	1	CMP22	W	105.91	0.00	105.91	71.00	34.91	Y
86/UT3	WHSE / TYPE WL	1	CMP22	W	105.91	0.00	105.91	71.00	34.91	Y
86/UT4	WHSE / TYPE WL	1	CMP22	W	105.91	0.00	105.91	71.00	34.91	Y

Path Voltage Drop Summary

Generation Date: 08/23/2005 06:30 pm

Battery: 22 **Node:** 14 **Circuit:** PP22-09 **Schematic:** 9321-LL-3114 SH 18

Device ID	Mfgr/Model	Path	Scenario	Time	Node Voltage	Path VD	Device Voltage	Required Voltage	Voltage Delta	Y/N
71X/HDT	WHSE / SG	1	CMP22	W	105.91	0.00	105.91	101.00	4.91	Y
86X/ST6-OP	WHSE / MG-6	1	CMP22	W	105.91	0.00	105.91	101.00	4.91	Y
86X/ST6-RESET	WHSE / MG-6	1	CMP22	W	105.91	0.00	105.91	101.00	4.91	Y

Path Voltage Drop Summary

Generation Date: 08/23/2005 06:30 pm

Battery: 22 **Node:** 14 **Circuit:** PP22-09 **Schematic:** 9321-LL-3114 SH 19

Device ID	Mfgr/Model	Path	Scenario	Time	Node Voltage	Path VD	Device Voltage	Required Voltage	Voltage Delta	Y/N
52CC-GT26	WHSE / 75DH500-CC	1	CMP22	35	105.91	0.00	105.91	76.00	29.91	Y
52TC-GT26	WHSE / 75DH500-TC	1	CMP22	W	105.91	0.00	105.91	71.00	34.91	Y
52X-GT26	WHSE / 75DH500 Solenoid Ope	1	CMP22	34	112.35	0.00	112.35	76.00	36.35	Y
52X-GT26	WHSE / 75DH500 Solenoid Ope	1	CMP22	35	105.91	0.00	105.91	76.00	29.91	Y
52Y-GT26	UNKNOWN / Y- CUT-OFF RELAY/6.0	1	CMP22	34	112.35	0.00	112.35	101.00	11.35	Y
52Y-GT26	UNKNOWN / Y- CUT-OFF RELAY/6.0	1	CMP22	35	105.91	0.00	105.91	101.00	4.91	Y

Path Voltage Drop Summary

Generation Date: 08/23/2005 06:30 pm

Battery: 22 **Node:** 14 **Circuit:** PP22-09 **Schematic:** 9321-LL-3114 SH 20

Device ID	Mfgr/Model	Path	Scenario	Time	Node Voltage	Path VD	Device Voltage	Required Voltage	Voltage Delta	Y/N
51N-SS22RW3	WHSE / 51N OVERCURRENT RELA	1	CMP22	W	105.91	0.00	105.91	101.00	4.91	Y
52CC-SS22RW3	WHSE / 75DH500-CC	1	CMP22	W	105.91	0.00	105.91	76.00	29.91	Y
52TC-SS22RW3	WHSE / 75DH500-TC	1	CMP22	W	105.91	0.00	105.91	71.00	34.91	Y
52X-SS22RW3	WHSE / 75DH500 Solenoid Ope	1	CMP22	W	105.91	0.00	105.91	76.00	29.91	Y
52Y-SS22RW3	UNKNOWN / Y- CUT-OFF RELAY/6.0	1	CMP22	W	105.91	0.00	105.91	101.00	4.91	Y

Path Voltage Drop Summary

Generation Date: 08/23/2005 06:30 pm

Battery: 22 **Node:** 14 **Circuit:** PP22-09 **Schematic:** 9321-LL-3114 SH 16

Device ID	Mfgr/Model	Path	Scenario	Time	Node Voltage	Path VD	Device Voltage	Required Voltage	Voltage Delta	Y/N
52CC-SS6	WHSE / 75DH500-CC	1	CMP22	35	105.91	0.00	105.91	76.00	29.91	Y
52TC-SS6	WHSE / 75DH500-TC	1	CMP22	18	112.94	0.00	112.94	71.00	41.94	Y
52TC-SS6	WHSE / 75DH500-TC	1	CMP22	19	112.94	0.00	112.94	71.00	41.94	Y
52X-SS6	WHSE / 75DH500 Solenoid Ope	1	CMP22	34	112.35	0.00	112.35	76.00	36.35	Y
52X-SS6	WHSE / 75DH500 Solenoid Ope	1	CMP22	35	105.91	0.00	105.91	76.00	29.91	Y
52Y-SS6	UNKNOWN / Y- CUT-OFF RELAY/6 P	1	CMP22	34	112.35	0.00	112.35	101.00	11.35	Y
52Y-SS6	UNKNOWN / Y- CUT-OFF RELAY/6 P	1	CMP22	35	105.91	0.00	105.91	101.00	4.91	Y

Path Voltage Drop Summary

Generation Date: 08/23/2005 06:30 pm

Battery: 22 **Node:** 14 **Circuit:** PP22-09 **Schematic:** B225123

Device ID	Mfgr/Model	Path	Scenario	Time	Node Voltage	Path VD	Device Voltage	Required Voltage	Voltage Delta	Y/N
27-3/62-BUS 3 UV/UF	UNKNOWN / UNKNOWN	1	CMP22	W	105.91	0.00	105.91	101.00	4.91	Y
27-3/62X-BUS 3 UV/UF	WHSE / MG-6	1	CMP22	W	105.91	0.00	105.91	101.00	4.91	Y
27-3/ICS-BUS 3 UV/UF	WHSE / CV	1	CMP22	W	105.91	0.00	105.91	101.00	4.91	Y
27-3/X1-BUS 3 UV/UF	WHSE / MG-6, 24 V, W/ 300 O	1	CMP22	W	105.91	0.00	105.91	101.00	4.91	Y
27-3/X2-BUS 3 UV/UF	WHSE / MG-6	1	CMP22	W	105.91	0.00	105.91	101.00	4.91	Y
27-3/X3-BUS 3 UV/UF	WHSE / SG	1	CMP22	W	105.91	0.00	105.91	101.00	4.91	Y
81-3/ICS-BUS 3 UV/UF	WHSE / KF	1	CMP22	W	105.91	0.00	105.91	101.00	4.91	Y
81-3/X1-BUS 3 UV/UF	WHSE / MG-6	1	CMP22	W	105.91	0.00	105.91	101.00	4.91	Y

Path Voltage Drop Summary

Generation Date: 08/23/2005 06:30 pm

Battery: 22 **Node:** 14 **Circuit:** PP22-09 **Schematic:** B225124

Device ID	Mfgr/Model	Path	Scenario	Time	Node Voltage	Path VD	Device Voltage	Required Voltage	Voltage Delta	Y/N
27-4/62-BUS 4 UV/UF	UNKNOWN / UNKNOWN	1	CMP22	W	105.91	0.00	105.91	101.00	4.91	Y
27-4/62X-BUS 4 UV/UF	WHSE / MG-6	1	CMP22	W	105.91	0.00	105.91	101.00	4.91	Y
27-4/ICS-BUS 4 UV/UF	WHSE / CV	1	CMP22	W	105.91	0.00	105.91	101.00	4.91	Y
27-4/X1-BUS 4 UV/UF	WHSE / MG-6, 24 V, W/ 300 O	1	CMP22	W	105.91	0.00	105.91	101.00	4.91	Y
27-4/X2-BUS 4 UV/UF	WHSE / MG-6	1	CMP22	W	105.91	0.00	105.91	101.00	4.91	Y
27-4/X3-BUS 4 UV/UF	WHSE / SG	1	CMP22	W	105.91	0.00	105.91	101.00	4.91	Y
81-4/ICS-BUS 4 UV/UF	WHSE / KF	1	CMP22	W	105.91	0.00	105.91	101.00	4.91	Y
81-4/X1-BUS 4 UV/UF	WHSE / MG-6	1	CMP22	W	105.91	0.00	105.91	101.00	4.91	Y

Path Voltage Drop Summary

Generation Date: 08/23/2005 06:30 pm

Battery: 22 **Node:** 14 **Circuit:** PP22-09 **Schematic:** B225173

Device ID	Mfgr/Model	Path	Scenario	Time	Node Voltage	Path VD	Device Voltage	Required Voltage	Voltage Delta	Y/N
27-3/62A-BUS 3 UV/UF	AGASTAT / 2122DH39YC	1	CMP22	W	105.91	0.00	105.91	101.00	4.91	Y
27-3A-BUS 3 UV/UF	ABB / TYPE 27N, SERIES 411	1	CMP22	W	105.91	0.00	105.91	101.00	4.91	Y
27-4/62A-BUS 4 UV/UF	AGASTAT / 2122DH39YC	1	CMP22	W	105.91	0.00	105.91	101.00	4.91	Y
27-4A-BUS 4 UV/UF	ABB / TYPE 27N, SERIES 411	1	CMP22	W	105.91	0.00	105.91	101.00	4.91	Y

Path Voltage Drop Summary

Generation Date: 08/23/2005 06:30 pm

Battery: 22 **Node:** 14 **Circuit:** PP22-09 **Schematic:** B231669

Device ID	Mfgr/Model	Path	Scenario	Time	Node Voltage	Path VD	Device Voltage	Required Voltage	Voltage Delta	Y/N
43/CWP22	UNKNOWN / UNKNOWN	1	CMP22	W	105.91	0.00	105.91	101.00	4.91	Y
49A/T-CWP22	UNKNOWN / UNKNOWN	1	CMP22	W	105.91	0.00	105.91	101.00	4.91	Y
49A/X-CWP22	UNKNOWN / UNKNOWN	1	CMP22	W	105.91	0.00	105.91	101.00	4.91	Y
49C/T-CWP22	UNKNOWN / UNKNOWN	1	CMP22	W	105.91	0.00	105.91	101.00	4.91	Y
49C/X-CWP22	UNKNOWN / UNKNOWN	1	CMP22	W	105.91	0.00	105.91	101.00	4.91	Y
52CC-CWP22	WHSE / 75DH500-CC	1	CMP22	W	105.91	0.00	105.91	76.00	29.91	Y
52TC-CWP22	WHSE / 75DH500-TC	1	CMP22	18	112.94	0.00	112.94	71.00	41.94	Y
52TC-CWP22	WHSE / 75DH500-TC	1	CMP22	19	112.94	0.00	112.94	71.00	41.94	Y
52X-CWP22	WHSE / 75DH500 Solenoid Ope	1	CMP22	W	105.91	0.00	105.91	76.00	29.91	Y
52Y-CWP22	UNKNOWN / Y- CUT-OFF RELAY/6-8	1	CMP22	W	105.91	0.00	105.91	101.00	4.91	Y
62/CWP22	UNKNOWN / UNKNOWN	1	CMP22	W	105.91	0.00	105.91	101.00	4.91	Y
62FLT/CWP22	UNKNOWN / UNKNOWN	1	CMP22	W	105.91	0.00	105.91	101.00	4.91	Y
63AR/CWP22	UNKNOWN / UNKNOWN	1	CMP22	W	105.91	0.00	105.91	101.00	4.91	Y

Path Voltage Drop Summary

Generation Date: 08/23/2005 06:30 pm

Battery: 22 **Node:** 14 **Circuit:** PP22-09 **Schematic:** B231670

Device ID	Mfgr/Model	Path	Scenario	Time	Node Voltage	Path VD	Device Voltage	Required Voltage	Voltage Delta	Y/N
43/CWP24	UNKNOWN / UNKNOWN	1	CMP22	W	105.91	0.00	105.91	101.00	4.91	Y
49A/T-CWP24	UNKNOWN / UNKNOWN	1	CMP22	W	105.91	0.00	105.91	101.00	4.91	Y
49A/X-CWP24	UNKNOWN / UNKNOWN	1	CMP22	W	105.91	0.00	105.91	101.00	4.91	Y
49C/T-CWP24	UNKNOWN / UNKNOWN	1	CMP22	W	105.91	0.00	105.91	101.00	4.91	Y
49C/X-CWP24	UNKNOWN / UNKNOWN	1	CMP22	W	105.91	0.00	105.91	101.00	4.91	Y
52CC-CWP24	WHSE / 75DH500-CC	1	CMP22	W	105.91	0.00	105.91	76.00	29.91	Y
52TC-CWP24	WHSE / 75DH500-TC	1	CMP22	18	112.94	0.00	112.94	71.00	41.94	Y
52TC-CWP24	WHSE / 75DH500-TC	1	CMP22	19	112.94	0.00	112.94	71.00	41.94	Y
52X-CWP24	WHSE / 75DH500 Solenoid Ope	1	CMP22	W	105.91	0.00	105.91	76.00	29.91	Y
52Y-CWP24	UNKNOWN / Y- CUT-OFF RELAY/6-0	1	CMP22	W	105.91	0.00	105.91	101.00	4.91	Y
62/CWP24	UNKNOWN / UNKNOWN	1	CMP22	W	105.91	0.00	105.91	101.00	4.91	Y
62FLT/CWP24	UNKNOWN / UNKNOWN	1	CMP22	W	105.91	0.00	105.91	101.00	4.91	Y
63AR/CWP24	UNKNOWN / UNKNOWN	1	CMP22	W	105.91	0.00	105.91	101.00	4.91	Y

Path Voltage Drop Summary

Generation Date: 08/23/2005 06:30 pm

Battery: 22 **Node:** 14 **Circuit:** PP22-09 **Schematic:** B231671

Device ID	Mfgr/Model	Path	Scenario	Time	Node Voltage	Path VD	Device Voltage	Required Voltage	Voltage Delta	Y/N
43/CWP26	UNKNOWN / UNKNOWN	1	CMP22	W	105.91	0.00	105.91	101.00	4.91	Y
49A/T-CWP26	UNKNOWN / UNKNOWN	1	CMP22	W	105.91	0.00	105.91	101.00	4.91	Y
49A/X-CWP26	UNKNOWN / UNKNOWN	1	CMP22	W	105.91	0.00	105.91	101.00	4.91	Y
49C/T-CWP26	UNKNOWN / UNKNOWN	1	CMP22	W	105.91	0.00	105.91	101.00	4.91	Y
49C/X-CWP26	UNKNOWN / UNKNOWN	1	CMP22	W	105.91	0.00	105.91	101.00	4.91	Y
52CC-CWP26	WHSE / 75DH500-CC	1	CMP22	W	105.91	0.00	105.91	76.00	29.91	Y
52TC-CWP26	WHSE / 75DH500-TC	1	CMP22	18	112.94	0.00	112.94	71.00	41.94	Y
52TC-CWP26	WHSE / 75DH500-TC	1	CMP22	19	112.94	0.00	112.94	71.00	41.94	Y
52X-CWP26	WHSE / 75DH500 Solenoid Ope	1	CMP22	W	105.91	0.00	105.91	76.00	29.91	Y
52Y-CWP26	UNKNOWN / Y- CUT-OFF RELAYS 0	1	CMP22	W	105.91	0.00	105.91	101.00	4.91	Y
62/CWP26	UNKNOWN / UNKNOWN	1	CMP22	W	105.91	0.00	105.91	101.00	4.91	Y
62FLT/CWP26	UNKNOWN / UNKNOWN	1	CMP22	W	105.91	0.00	105.91	101.00	4.91	Y
63AR/CWP26	UNKNOWN / UNKNOWN	1	CMP22	W	105.91	0.00	105.91	101.00	4.91	Y

Path Voltage Drop Summary

Generation Date: 08/23/2005 06:30 pm

Battery: 22 **Node:** 15 **Circuit:** PP22-10 **Schematic:** 1986M03453

Device ID	Mfgr/Model	Path	Scenario	Time	Node Voltage	Path VD	Device Voltage	Required Voltage	Voltage Delta	Y/N
53A-GEN EXC BKR	UNKNOWN / UNKNOWN	1	CMP22	W	111.82	0.00	111.82	101.00	10.82	Y
53B-GEN EXC BKR	UNKNOWN / UNKNOWN	1	CMP22	W	111.82	0.00	111.82	101.00	10.82	Y
53TD-GEN EXC BKR	UNKNOWN / UNKNOWN	1	CMP22	W	111.82	0.00	111.82	101.00	10.82	Y
53X-GEN EXC BKR	UNKNOWN / UNKNOWN	1	CMP22	W	111.82	0.00	111.82	101.00	10.82	Y
FILTER 53A-GEN EXC BKR	UNKNOWN / FILTER FOR GEN FF	1	CMP22	W	111.82	0.00	111.82	101.00	10.82	Y
FILTER 53B-GEN EXC BKR	UNKNOWN / FILTER FOR GEN FF	1	CMP22	W	111.82	0.00	111.82	101.00	10.82	Y
FILTER 53TD-GEN EXC BKR	UNKNOWN / FILTER FOR GEN FF	1	CMP22	W	111.82	0.00	111.82	101.00	10.82	Y
FILTER 53X-GEN EXC BKR	UNKNOWN / FILTER FOR GEN FF	1	CMP22	W	111.82	0.00	111.82	101.00	10.82	Y

Path Voltage Drop Summary

Generation Date: 08/23/2005 06:30 pm

Battery: 22 **Node:** 15 **Circuit:** PP22-10 **Schematic:** 1986M03496

Device ID	Mfgr/Model	Path	Scenario	Time	Node Voltage	Path VD	Device Voltage	Required Voltage	Voltage Delta	Y/N
57/CC-GEN EXC BKR	GE / Close Solenoid AKR-4	1	CMP22	W	111.82	0.00	111.82	101.00	10.82	Y
57/MTR-GEN EXC BKR	GE / Motor AKR-4B-50, GE	1	CMP22	W	111.82	0.00	111.82	101.00	10.82	Y
57/TC-GEN EXC BKR	GE / TC AKR-4B-50, GE BRE	1	CMP22	W	111.82	0.00	111.82	71.00	40.82	Y
57/W-GEN EXC BKR	GE / W AKR-4B-50, GE BREA	1	CMP22	W	111.82	0.00	111.82	86.00	25.82	Y
57/X-GEN EXC BKR	GE / X AKR-4B-50, GE BREA	1	CMP22	W	111.82	0.00	111.82	91.00	20.82	Y
BATTERY LINE FILTER PNL	GE / BATTERY LINE FILTER	1	CMP22	W	111.82	0.00	111.82	101.00	10.82	Y

Path Voltage Drop Summary

Generation Date: 08/23/2005 06:30 pm

Battery: 22 **Node:** 15 **Circuit:** PP22-10 **Schematic:** 1986M03516

Device ID	Mfgr/Model	Path	Scenario	Time	Node Voltage	Path VD	Device Voltage	Required Voltage	Voltage Delta	Y/N
74T-GEN EXC BKR	UNKNOWN / UNKNOWN	1	CMP22	W	111.82	0.00	111.82	101.00	10.82	Y
TLED-1-GEN EXC BKR	UNKNOWN / LED	1	CMP22	W	111.82	0.00	111.82	1.00	110.82	Y
TLED-2-GEN EXC BKR	UNKNOWN / LED	1	CMP22	W	111.82	0.00	111.82	1.00	110.82	Y
TLED-3-GEN EXC BKR	UNKNOWN / LED	1	CMP22	W	111.82	0.00	111.82	1.00	110.82	Y
TLED-4-GEN EXC BKR	UNKNOWN / LED	1	CMP22	W	111.82	0.00	111.82	1.00	110.82	Y
ZD-GEN EXC BKR	UNKNOWN / ZENER DIODE 24V,	1	CMP22	W	111.82	0.00	111.82	1.00	110.82	Y

Path Voltage Drop Summary

Generation Date: 08/23/2005 06:30 pm

Battery: 22 **Node:** 15 **Circuit:** PP22-10 **Schematic:** 9321-LL-3130 SH 05

Device ID	Mfgr/Model	Path	Scenario	Time	Node Voltage	Path VD	Device Voltage	Required Voltage	Voltage Delta	Y/N
59T/TDPU-GEN EXC BKR	UNKNOWN / UNKNOWN	1	CMP22	W	111.82	0.00	111.82	101.00	10.82	Y

Path Voltage Drop Summary

Generation Date: 08/23/2005 06:30 pm

Battery: 22 **Node:** 16 **Circuit:** PP22-11 **Schematic:** 110E073 SH 11

Device ID	Mfgr/Model	Path	Scenario	Time	Node Voltage	Path VD	Device Voltage	Required Voltage	Voltage Delta	Y/N
52CC-BYA	WHSE / DB-50-CC	1	CMP22	W	112.58	0.00	112.58	91.00	21.58	Y
52CC-RTB	WHSE / DB-50-CC	1	CMP22	W	112.58	0.00	112.58	91.00	21.58	Y
52R-RTB	UNKNOWN / R- 52R, RESET Rx	1	CMP22	W	112.58	0.00	112.58	101.00	11.58	Y
52TC-BYA	WHSE / DB-50-TC	1	CMP22	01	115.25	0.00	115.25	71.00	44.25	Y
52TC-RTB	WHSE / DB-50-TC	1	CMP22	01	115.25	0.00	115.25	71.00	44.25	Y
52X-BYA	WHSE / X- CLOSING RELAY (0.	1	CMP22	W	112.58	0.00	112.58	91.00	21.58	Y
52X-RTB	WHSE / X- CLOSING RELAY (0.	1	CMP22	W	112.58	0.00	112.58	91.00	21.58	Y

Path Voltage Drop Summary

Generation Date: 08/23/2005 06:30 pm

Battery: 22 **Node:** 17 **Circuit:** DP22-01 **Schematic:** 9321-LL-3132 SH 07

Device ID	Mfgr/Model	Path	Scenario	Time	Node Voltage	Path VD	Device Voltage	Required Voltage	Voltage Delta	Y/N
85L2/345-345kV LINE	UNKNOWN / PILOT WIRE RECIEVER	1	CMP22	W	110.80	0.00	110.80	97.00	13.80	Y
86X1-345kV LINE	WHSE / BFD	1	CMP22	W	110.80	0.00	110.80	97.00	13.80	Y
87L2/345-345kV LINE	WHSE / TYPE HCB, DIFF CURRE	1	CMP22	W	110.80	0.00	110.80	101.00	9.80	Y
TD1/345-345kV LINE	UNKNOWN / UNKNOWN	1	CMP22	W	110.80	0.00	110.80	101.00	9.80	Y
TD2/345-345kV LINE	UNKNOWN / UNKNOWN	1	CMP22	W	110.80	0.00	110.80	101.00	9.80	Y
TD2X-345kV LINE	WHSE / BFD	1	CMP22	W	110.80	0.00	110.80	97.00	13.80	Y
TD3/345-345kV LINE	UNKNOWN / UNKNOWN	1	CMP22	W	110.80	0.00	110.80	101.00	9.80	Y

Path Voltage Drop Summary

Generation Date: 08/23/2005 06:30 pm

Battery: 22 **Node:** 17 **Circuit:** DP22-01 **Schematic:** 9321-LL-3132 SH 09

Device ID	Mfgr/Model	Path	Scenario	Time	Node Voltage	Path VD	Device Voltage	Required Voltage	Voltage Delta	Y/N
85L2/138-138kV LINE	UNKNOWN / PILOT WIRE RECIEVER	1	CMP22	W	110.80	0.00	110.80	97.00	13.80	Y
87L2/138-138kV LINE	WHSE / TYPE HCB, DIFF CURRE	1	CMP22	W	110.80	0.00	110.80	101.00	9.80	Y
TD1-138kV LINE	UNKNOWN / UNKNOWN	1	CMP22	W	110.80	0.00	110.80	101.00	9.80	Y
TD2-138kV LINE	UNKNOWN / UNKNOWN	1	CMP22	W	110.80	0.00	110.80	101.00	9.80	Y
TD2X-138kV LINE	WHSE / BFD	1	CMP22	W	110.80	0.00	110.80	97.00	13.80	Y
TD3-138kV LINE	UNKNOWN / UNKNOWN	1	CMP22	W	110.80	0.00	110.80	101.00	9.80	Y

Path Voltage Drop Summary

Generation Date: 08/23/2005 06:30 pm

Battery: 22 **Node:** 17 **Circuit:** DP22-01 **Schematic:** B225122

Device ID	Mfgr/Model	Path	Scenario	Time	Node Voltage	Path VD	Device Voltage	Required Voltage	Voltage Delta	Y/N
81T2-UVUF	WHSE / MG-6	1	CMP22	W	110.80	0.00	110.80	101.00	9.80	Y

Path Voltage Drop Summary

Generation Date: 08/23/2005 06:30 pm

Battery: 22 **Node:** 17 **Circuit:** DP22-01 **Schematic:** B225125

Device ID	Mfgr/Model	Path	Scenario	Time	Node Voltage	Path VD	Device Voltage	Required Voltage	Voltage Delta	Y/N
27-6/62-UVUF	UNKNOWN / UNKNOWN	1	CMP22	W	110.80	0.00	110.80	101.00	9.80	Y
27-6/62X-UVUF	WHSE / MG-6	1	CMP22	W	110.80	0.00	110.80	101.00	9.80	Y
27-6/ICS-UVUF	WHSE / CV	1	CMP22	W	110.80	0.00	110.80	101.00	9.80	Y
27-6/X1-UVUF	WHSE / MG-6, 24 V, W/ 300 O	1	CMP22	W	110.80	0.00	110.80	101.00	9.80	Y

Path Voltage Drop Summary

Generation Date: 08/23/2005 06:30 pm

Battery: 22 **Node:** 17 **Circuit:** DP22-02 **Schematic:** 9321-LL-3132 SH 11

Device ID	Mfgr/Model	Path	Scenario	Time	Node Voltage	Path VD	Device Voltage	Required Voltage	Voltage Delta	Y/N
201/C-BKR-7	UNKNOWN / UNKNOWN	1	CMP22	W	110.80	0.00	110.80	101.00	9.80	Y
294/T-BKR-7	UNKNOWN / UNKNOWN	1	CMP22	W	110.80	0.00	110.80	101.00	9.80	Y

Path Voltage Drop Summary

Generation Date: 08/23/2005 06:30 pm

Battery: 22 **Node:** 17 **Circuit:** DP22-03 **Schematic:** 9321-LL-3132 SH 02

Device ID	Mfgr/Model	Path	Scenario	Time	Node Voltage	Path VD	Device Voltage	Required Voltage	Voltage Delta	Y/N
62/UT	UNKNOWN / TD-53 TIME DELAY RELAY	1	CMP22	W	110.80	0.00	110.80	101.00	9.80	Y
86/UT	WHSE / TYPE WL	1	CMP22	W	110.80	0.00	110.80	71.00	39.80	Y

Path Voltage Drop Summary

Generation Date: 08/23/2005 06:30 pm

Battery: 22 **Node:** 17 **Circuit:** DP22-03 **Schematic:** 9321-LL-3132 SH 04

Device ID	Mfgr/Model	Path	Scenario	Time	Node Voltage	Path VD	Device Voltage	Required Voltage	Voltage Delta	Y/N
86/STBU	WHSE / TYPE WL	1	CMP22	W	110.80	0.00	110.80	71.00	39.80	Y

Path Voltage Drop Summary

Generation Date: 08/23/2005 06:30 pm

Battery: 22 **Node:** 17 **Circuit:** DP22-03 **Schematic:** 9321-LL-3132 SH 05

Device ID	Mfgr/Model	Path	Scenario	Time	Node Voltage	Path VD	Device Voltage	Required Voltage	Voltage Delta	Y/N
25X2-MISC LO RLY	WHSE / MG-6	1	CMP22	W	110.80	0.00	110.80	101.00	9.80	Y

Path Voltage Drop Summary

Generation Date: 08/23/2005 06:30 pm

Battery: 22 **Node:** 17 **Circuit:** DP22-03 **Schematic:** 9321-LL-3132 SH 13

Device ID	Mfgr/Model	Path	Scenario	Time	Node Voltage	Path VD	Device Voltage	Required Voltage	Voltage Delta	Y/N
86/STBU-A	WHSE / TYPE WL	1	CMP22	W	110.80	0.00	110.80	71.00	39.80	Y

Path Voltage Drop Summary

Generation Date: 08/23/2005 06:30 pm

Battery: 22 **Node:** 17 **Circuit:** DP22-04 **Schematic:** B209518

Device ID	Mfgr/Model	Path	Scenario	Time	Node Voltage	Path VD	Device Voltage	Required Voltage	Voltage Delta	Y/N
SOV951	ASCO / CAT. NO. NP8320A183V	1	CMP22	W	110.80	0.00	110.80	91.00	19.80	Y

Path Voltage Drop Summary

Generation Date: 08/23/2005 06:30 pm

Battery: 22 **Node:** 17 **Circuit:** DP22-04 **Schematic:** B209519

Device ID	Mfgr/Model	Path	Scenario	Time	Node Voltage	Path VD	Device Voltage	Required Voltage	Voltage Delta	Y/N
SOV953	ASCO / CAT. NO. NP8320A183V	1	CMP22	W	110.80	0.00	110.80	91.00	19.80	Y

Path Voltage Drop Summary

Generation Date: 08/23/2005 06:30 pm

Battery: 22 **Node:** 17 **Circuit:** DP22-04 **Schematic:** B209520

Device ID	Mfgr/Model	Path	Scenario	Time	Node Voltage	Path VD	Device Voltage	Required Voltage	Voltage Delta	Y/N
SOV955C	UNKNOWN / UNKNOWN	1	CMP22	W	110.80	0.00	110.80	103.00	7.80	Y

Path Voltage Drop Summary

Generation Date: 08/23/2005 06:30 pm

Battery: 22 **Node:** 17 **Circuit:** DP22-04 **Schematic:** B209521

Device ID	Mfgr/Model	Path	Scenario	Time	Node Voltage	Path VD	Device Voltage	Required Voltage	Voltage Delta	Y/N
SOV955D	UNKNOWN / UNKNOWN	1	CMP22	W	110.80	0.00	110.80	103.00	7.80	Y

Path Voltage Drop Summary

Generation Date: 08/23/2005 06:30 pm

Battery: 22 **Node:** 17 **Circuit:** DP22-04 **Schematic:** B209522

Device ID	Mfgr/Model	Path	Scenario	Time	Node Voltage	Path VD	Device Voltage	Required Voltage	Voltage Delta	Y/N
SOV955E	UNKNOWN / UNKNOWN	1	CMP22	W	110.80	0.00	110.80	103.00	7.80	Y

Path Voltage Drop Summary

Generation Date: 08/23/2005 06:30 pm

Battery: 22 **Node:** 17 **Circuit:** DP22-04 **Schematic:** B209523

Device ID	Mfgr/Model	Path	Scenario	Time	Node Voltage	Path VD	Device Voltage	Required Voltage	Voltage Delta	Y/N
SOV955F	ASCO / CAT. NO. NP8320A183E	1	CMP22	W	110.80	0.00	110.80	91.00	19.80	Y

Path Voltage Drop Summary

Generation Date: 08/23/2005 06:30 pm

Battery: 22 **Node:** 17 **Circuit:** DP22-05 **Schematic:** 208416

Device ID	Mfgr/Model	Path	Scenario	Time	Node Voltage	Path VD	Device Voltage	Required Voltage	Voltage Delta	Y/N
1789/BRR-V1789	WHSE / BFD	1	CMP22	W	110.80	0.00	110.80	97.00	13.80	Y
SOV1789	ASCO / CAT. NO. NP8320A183V	1	CMP22	W	110.80	0.00	110.80	91.00	19.80	Y

Path Voltage Drop Summary

Generation Date: 08/23/2005 06:30 pm

Battery: 22 **Node:** 17 **Circuit:** DP22-05 **Schematic:** 208417

Device ID	Mfgr/Model	Path	Scenario	Time	Node Voltage	Path VD	Device Voltage	Required Voltage	Voltage Delta	Y/N
1788/ARR-V1788	WHSE / BFD	1	CMP22	W	110.80	0.00	110.80	97.00	13.80	Y
SOV1788	ASCO / CAT. NO. NP8320A183V	1	CMP22	W	110.80	0.00	110.80	91.00	19.80	Y

Path Voltage Drop Summary

Generation Date: 08/23/2005 06:30 pm

Battery: 22 **Node:** 17 **Circuit:** DP22-05 **Schematic:** 208419

Device ID	Mfgr/Model	Path	Scenario	Time	Node Voltage	Path VD	Device Voltage	Required Voltage	Voltage Delta	Y/N
548/ARR-V548	WHSE / BFD	1	CMP22	W	110.80	0.00	110.80	97.00	13.80	Y
SOV548	ASCO / CAT. NO. NP8314C28V	1	CMP22	W	110.80	0.00	110.80	91.00	19.80	Y

Path Voltage Drop Summary

Generation Date: 08/23/2005 06:30 pm

Battery: 22 **Node:** 17 **Circuit:** DP22-05 **Schematic:** 208421

Device ID	Mfgr/Model	Path	Scenario	Time	Node Voltage	Path VD	Device Voltage	Required Voltage	Voltage Delta	Y/N
549/BRR-V549	WHSE / BFD	1	CMP22	W	110.80	0.00	110.80	97.00	13.80	Y
SOV549	ASCO / CAT. NO. NP8314C28V	1	CMP22	W	110.80	0.00	110.80	91.00	19.80	Y

Path Voltage Drop Summary

Generation Date: 08/23/2005 06:30 pm

Battery: 22 **Node:** 17 **Circuit:** DP22-05 **Schematic:** 303686

Device ID	Mfgr/Model	Path	Scenario	Time	Node Voltage	Path VD	Device Voltage	Required Voltage	Voltage Delta	Y/N
SOV1600A	ASCO / CAT. NO. HCX8262220	1	CMP22	W	110.80	0.00	110.80	103.00	7.80	Y
SOV1600B	ASCO / CAT. NO. HCX8262220	1	CMP22	W	110.80	0.00	110.80	103.00	7.80	Y
SOV1600D	ASCO / CAT. NO. HCX8262220	1	CMP22	W	110.80	0.00	110.80	103.00	7.80	Y
SOV265	UNKNOWN / UNKNOWN	1	CMP22	W	110.80	0.00	110.80	103.00	7.80	Y

Path Voltage Drop Summary

Generation Date: 08/23/2005 06:30 pm

Battery: 22 **Node:** 17 **Circuit:** DP22-05 **Schematic:** 303845

Device ID	Mfgr/Model	Path	Scenario	Time	Node Voltage	Path VD	Device Voltage	Required Voltage	Voltage Delta	Y/N
SOV1286	UNKNOWN / UNKNOWN	1	CMP22	W	110.80	0.00	110.80	103.00	7.80	Y
SOV1600E	ASCO / CAT. NO. HCX8262220	1	CMP22	W	110.80	0.00	110.80	103.00	7.80	Y
SOV1600F	ASCO / CAT. NO. HCX8262220	1	CMP22	W	110.80	0.00	110.80	103.00	7.80	Y
SOV1600G	ASCO / CAT. NO. HCX8262220	1	CMP22	W	110.80	0.00	110.80	103.00	7.80	Y

Path Voltage Drop Summary

Generation Date: 08/23/2005 06:30 pm

Battery: 22 **Node:** 17 **Circuit:** DP22-05 **Schematic:** 304159

Device ID	Mfgr/Model	Path	Scenario	Time	Node Voltage	Path VD	Device Voltage	Required Voltage	Voltage Delta	Y/N
SOV1284	UNKNOWN / UNKNOWN	1	CMP22	W	110.80	0.00	110.80	103.00	7.80	Y
SOV1285	UNKNOWN / UNKNOWN	1	CMP22	W	110.80	0.00	110.80	103.00	7.80	Y
SOV1600H	ASCO / CAT. NO. HCX8262220	1	CMP22	W	110.80	0.00	110.80	103.00	7.80	Y
SOV1600J	ASCO / CAT. NO. HCX8262220	1	CMP22	W	110.80	0.00	110.80	103.00	7.80	Y
SOV1600K	ASCO / CAT. NO. HCX8262220	1	CMP22	W	110.80	0.00	110.80	103.00	7.80	Y

Path Voltage Drop Summary

Generation Date: 08/23/2005 06:30 pm

Battery: 22 **Node:** 17 **Circuit:** DP22-05 **Schematic:** A207559

Device ID	Mfgr/Model	Path	Scenario	Time	Node Voltage	Path VD	Device Voltage	Required Voltage	Voltage Delta	Y/N
1/SJAE-X	WHSE / BFD	1	CMP22	W	110.80	0.00	110.80	97.00	13.80	Y
33-2X	WHSE / BFD	1	CMP22	W	110.80	0.00	110.80	97.00	13.80	Y
33-4X	WHSE / BFD	1	CMP22	W	110.80	0.00	110.80	97.00	13.80	Y

Path Voltage Drop Summary

Generation Date: 08/23/2005 06:30 pm

Battery: 22 **Node:** 17 **Circuit:** DP22-05 **Schematic:** B207571

Device ID	Mfgr/Model	Path	Scenario	Time	Node Voltage	Path VD	Device Voltage	Required Voltage	Voltage Delta	Y/N
SOV1430	ASCO / CAT. NO. NP8321A5DE	1	CMP22	W	110.80	0.00	110.80	91.00	19.80	Y
SOV1433	ASCO / CAT. NO. 8300C58RF	1	CMP22	W	110.80	0.00	110.80	103.00	7.80	Y

Path Voltage Drop Summary

Generation Date: 08/23/2005 06:30 pm

Battery: 22 **Node:** 17 **Circuit:** DP22-05 **Schematic:** B208435

Device ID	Mfgr/Model	Path	Scenario	Time	Node Voltage	Path VD	Device Voltage	Required Voltage	Voltage Delta	Y/N
10SGIS/BRR	UNKNOWN / UNKNOWN	1	CMP22	W	110.80	0.00	110.80	101.00	9.80	Y
9SGIS/BRR	UNKNOWN / UNKNOWN	1	CMP22	W	110.80	0.00	110.80	101.00	9.80	Y

Path Voltage Drop Summary

Generation Date: 08/23/2005 06:30 pm

Battery: 22 **Node:** 17 **Circuit:** DP22-08 **Schematic:** 110E073 SH 11

Device ID	Mfgr/Model	Path	Scenario	Time	Node Voltage	Path VD	Device Voltage	Required Voltage	Voltage Delta	Y/N
BYA/RT/BX-RX TRIP TR B	WHSE / BFD	1	CMP22	W	110.80	0.00	110.80	97.00	13.80	Y
S166/ST-52/RTB	GE / TYPE HGA	1	CMP22	W	110.80	0.00	110.80	101.00	9.80	Y
S167/ST1-52/RTB	GE / TYPE HGA	1	CMP22	W	110.80	0.00	110.80	101.00	9.80	Y
UV-52/BYA-RX TRIP TR B	UNKNOWN / UV RELAY	1	CMP22	W	110.80	0.00	110.80	101.00	9.80	Y
UV-52/RTB-RX TRIP TR B	UNKNOWN / UV RELAY	1	CMP22	W	110.80	0.00	110.80	101.00	9.80	Y

Path Voltage Drop Summary

Generation Date: 08/23/2005 06:30 pm

Battery: 22 **Node:** 17 **Circuit:** DP22-08 **Schematic:** 110E073 SH 9

Device ID	Mfgr/Model	Path	Scenario	Time	Node Voltage	Path VD	Device Voltage	Required Voltage	Voltage Delta	Y/N
27/2/X-1/X-RX TRIP TR B	UNKNOWN / UNKNOWN	1	CMP22	W	110.80	0.00	110.80	101.00	9.80	Y
27/3/X-1/X-RX TRIP TR B	UNKNOWN / UNKNOWN	1	CMP22	W	110.80	0.00	110.80	101.00	9.80	Y
52/RCP21X-RX TRIP TR B	WHSE / TYPE BFD, STYLE 5072	1	CMP22	W	110.80	0.00	110.80	97.00	13.80	Y
52/RCP22X-RX TRIP TR B	WHSE / TYPE BFD, STYLE 5072	1	CMP22	W	110.80	0.00	110.80	97.00	13.80	Y
52/RCP23X-RX TRIP TR B	WHSE / TYPE BFD, STYLE 5072	1	CMP22	W	110.80	0.00	110.80	97.00	13.80	Y
52/RCP24X-RX TRIP TR B	WHSE / TYPE BFD, STYLE 5072	1	CMP22	W	110.80	0.00	110.80	97.00	13.80	Y

Path Voltage Drop Summary

Generation Date: 08/23/2005 06:30 pm

Battery: 22 **Node:** 17 **Circuit:** DP22-08 **Schematic:** 110E073 SH 2

Device ID	Mfgr/Model	Path	Scenario	Time	Node Voltage	Path VD	Device Voltage	Required Voltage	Voltage Delta	Y/N
15-RX TRIP TR B	WHSE / TYPE BFD, STYLE 5072	1	CMP22	W	110.80	0.00	110.80	97.00	13.80	Y
16-RX TRIP TR B	WHSE / TYPE BFD, STYLE 5072	1	CMP22	W	110.80	0.00	110.80	97.00	13.80	Y
17-RX TRIP TR B	WHSE / TYPE BFD, STYLE 5072	1	CMP22	W	110.80	0.00	110.80	97.00	13.80	Y
18-RX TRIP TR B	WHSE / TYPE BFD, STYLE 5072	1	CMP22	W	110.80	0.00	110.80	97.00	13.80	Y
21-RX TRIP TR B	WHSE / TYPE BFD, STYLE 5072	1	CMP22	W	110.80	0.00	110.80	97.00	13.80	Y
22-RX TRIP TR B	WHSE / TYPE BFD, STYLE 5072	1	CMP22	W	110.80	0.00	110.80	97.00	13.80	Y
LF/1X-RX TRIP TR B	WHSE / TYPE BFD, STYLE 5072	1	CMP22	W	110.80	0.00	110.80	97.00	13.80	Y
LF/2X-RX TRIP TR B	WHSE / TYPE BFD, STYLE 5072	1	CMP22	W	110.80	0.00	110.80	97.00	13.80	Y
LF/3X-RX TRIP TR B	WHSE / TYPE BFD, STYLE 5072	1	CMP22	W	110.80	0.00	110.80	97.00	13.80	Y
LF/4X-RX TRIP TR B	WHSE / TYPE BFD, STYLE 5072	1	CMP22	W	110.80	0.00	110.80	97.00	13.80	Y
P-10-1-RX TRIP TR B	WHSE / TYPE BFD, STYLE 5072	1	CMP22	W	110.80	0.00	110.80	97.00	13.80	Y
P-10-2-RX TRIP TR B	WHSE / TYPE BFD, STYLE 5072	1	CMP22	W	110.80	0.00	110.80	97.00	13.80	Y
P-7-1-RX TRIP TR B	WHSE / TYPE BFD, STYLE 5072	1	CMP22	W	110.80	0.00	110.80	97.00	13.80	Y
P-7-2-RX TRIP TR B	WHSE / TYPE BFD, STYLE 5072	1	CMP22	W	110.80	0.00	110.80	97.00	13.80	Y
P-7-3-RX TRIP TR B	WHSE / TYPE BFD, STYLE 5072	1	CMP22	W	110.80	0.00	110.80	97.00	13.80	Y
P-7-4-RX TRIP TR B	WHSE / TYPE BFD, STYLE 5072	1	CMP22	W	110.80	0.00	110.80	97.00	13.80	Y
P8-1-RX TRIP TR B	WHSE / TYPE BFD, STYLE 5072	1	CMP22	W	110.80	0.00	110.80	97.00	13.80	Y
P8-2-RX TRIP TR B	WHSE / TYPE BFD, STYLE 5072	1	CMP22	W	110.80	0.00	110.80	97.00	13.80	Y
RT1-RX TRIP TR B	WHSE / TYPE BFD, STYLE 5072	1	CMP22	W	110.80	0.00	110.80	97.00	13.80	Y
RT10-RX TRIP TR B	WHSE / TYPE BFD, STYLE 5072	1	CMP22	W	110.80	0.00	110.80	97.00	13.80	Y
RT11-RX TRIP TR B	WHSE / TYPE BFD, STYLE 5072	1	CMP22	W	110.80	0.00	110.80	97.00	13.80	Y
RT12-RX TRIP TR B	WHSE / TYPE BFD, STYLE 5072	1	CMP22	W	110.80	0.00	110.80	97.00	13.80	Y
RT13-RX TRIP TR B	WHSE / TYPE BFD, STYLE 5072	1	CMP22	W	110.80	0.00	110.80	97.00	13.80	Y
RT14-RX TRIP TR B	WHSE / TYPE BFD, STYLE 5072	1	CMP22	W	110.80	0.00	110.80	97.00	13.80	Y
RT15-RX TRIP TR B	WHSE / TYPE BFD, STYLE 5072	1	CMP22	W	110.80	0.00	110.80	97.00	13.80	Y
RT16-RX TRIP TR B	WHSE / TYPE BFD, STYLE 5072	1	CMP22	W	110.80	0.00	110.80	97.00	13.80	Y
RT17-RX TRIP TR B	WHSE / BFD	1	CMP22	W	110.80	0.00	110.80	97.00	13.80	Y
RT18-RX TRIP TR B	WHSE / BFD	1	CMP22	W	110.80	0.00	110.80	97.00	13.80	Y
RT2-RX TRIP TR B	WHSE / TYPE BFD, STYLE 5072	1	CMP22	W	110.80	0.00	110.80	97.00	13.80	Y
RT3-RX TRIP TR B	WHSE / TYPE BFD, STYLE 5072	1	CMP22	W	110.80	0.00	110.80	97.00	13.80	Y
RT4-RX TRIP TR B	WHSE / TYPE BFD, STYLE 5072	1	CMP22	W	110.80	0.00	110.80	97.00	13.80	Y
RT5-RX TRIP TR B	WHSE / TYPE BFD, STYLE 5072	1	CMP22	W	110.80	0.00	110.80	97.00	13.80	Y
RT6-RX TRIP TR B	WHSE / TYPE BFD, STYLE 5072	1	CMP22	W	110.80	0.00	110.80	97.00	13.80	Y
RT7-RX TRIP TR B	WHSE / TYPE BFD, STYLE 5072	1	CMP22	W	110.80	0.00	110.80	97.00	13.80	Y
RT8-RX TRIP TR B	WHSE / TYPE BFD, STYLE 5072	1	CMP22	W	110.80	0.00	110.80	97.00	13.80	Y
RT9-RX TRIP TR B	WHSE / TYPE BFD, STYLE 5072	1	CMP22	W	110.80	0.00	110.80	97.00	13.80	Y

Path Voltage Drop Summary

Generation Date: 08/23/2005 06:30 pm

Battery: 22 **Node:** 17 **Circuit:** DP22-08 **Schematic:** 110E073 SH 3

Device ID	Mfgr/Model	Path	Scenario	Time	Node Voltage	Path VD	Device Voltage	Required Voltage	Voltage Delta	Y/N
1/NC32B/X-RX TRIP TR B	UNKNOWN / UNKNOWN	1	CMP22	W	110.80	0.00	110.80	101.00	9.80	Y
1/NC32B/Y-RX TRIP TR B	UNKNOWN / UNKNOWN	1	CMP22	W	110.80	0.00	110.80	101.00	9.80	Y
1/NC32B/Z-RX TRIP TR B	UNKNOWN / UNKNOWN	1	CMP22	W	110.80	0.00	110.80	101.00	9.80	Y
1/NC33B/X-RX TRIP TR B	UNKNOWN / UNKNOWN	1	CMP22	W	110.80	0.00	110.80	101.00	9.80	Y
1/NC33B/Z-RX TRIP TR B	UNKNOWN / UNKNOWN	1	CMP22	W	110.80	0.00	110.80	101.00	9.80	Y
1/NC35A/X-RX TRIP TR B	UNKNOWN / UNKNOWN	1	CMP22	W	110.80	0.00	110.80	101.00	9.80	Y
1/NC35A/Y-RX TRIP TR B	UNKNOWN / UNKNOWN	1	CMP22	W	110.80	0.00	110.80	101.00	9.80	Y
1/NC35A/Z-RX TRIP TR B	UNKNOWN / UNKNOWN	1	CMP22	W	110.80	0.00	110.80	101.00	9.80	Y
1/NC36A/X- RX TRIP TR B	UNKNOWN / UNKNOWN	1	CMP22	W	110.80	0.00	110.80	101.00	9.80	Y
1/NC36A/Y- RX TRIP TR B	UNKNOWN / UNKNOWN	1	CMP22	W	110.80	0.00	110.80	101.00	9.80	Y
1/NC36A/Z- RX TRIP TR B	UNKNOWN / UNKNOWN	1	CMP22	W	110.80	0.00	110.80	101.00	9.80	Y
1/NC38B/X-RX TRIP TR B	UNKNOWN / UNKNOWN	1	CMP22	W	110.80	0.00	110.80	101.00	9.80	Y
1/NC38B/Z-RX TRIP TR B	UNKNOWN / UNKNOWN	1	CMP22	W	110.80	0.00	110.80	101.00	9.80	Y
1/NC39A/X-RX TRIP TR B	UNKNOWN / UNKNOWN	1	CMP22	W	110.80	0.00	110.80	101.00	9.80	Y
1/NC39B/X-RX TRIP TR B	UNKNOWN / UNKNOWN	1	CMP22	W	110.80	0.00	110.80	101.00	9.80	Y
1/NC47B/X-RX TRIP TR B	UNKNOWN / UNKNOWN	1	CMP22	W	110.80	0.00	110.80	101.00	9.80	Y
1/NC47B/Z-RX TRIP TR B	UNKNOWN / UNKNOWN	1	CMP22	W	110.80	0.00	110.80	101.00	9.80	Y

Path Voltage Drop Summary

Generation Date: 08/23/2005 06:30 pm

Battery: 22 **Node:** 17 **Circuit:** DP22-08 **Schematic:** 110E073 SH 5

Device ID	Mfgr/Model	Path	Scenario	Time	Node Voltage	Path VD	Device Voltage	Required Voltage	Voltage Delta	Y/N
SIAM/1-X-RX TRIP TR B	WHSE / TYPE BFD, STYLE 5072	1	CMP22	W	110.80	0.00	110.80	97.00	13.80	Y
SIAM/2-X-RX TRIP TR B	WHSE / TYPE BFD, STYLE 5072	1	CMP22	W	110.80	0.00	110.80	97.00	13.80	Y

Path Voltage Drop Summary

Generation Date: 08/23/2005 06:30 pm

Battery: 22 **Node:** 17 **Circuit:** DP22-08 **Schematic:** 110E073 SH 8

Device ID	Mfgr/Model	Path	Scenario	Time	Node Voltage	Path VD	Device Voltage	Required Voltage	Voltage Delta	Y/N
1/MT/1-X-RX TRIP TR B	WHSE / TYPE BFD, STYLE 5072	1	CMP22	W	110.80	0.00	110.80	97.00	13.80	Y
1/MT/2-X-RX TRIP TR B	WHSE / TYPE BFD, STYLE 5072	1	CMP22	W	110.80	0.00	110.80	97.00	13.80	Y

Path Voltage Drop Summary

Generation Date: 08/23/2005 06:30 pm

Battery: 22 **Node:** 17 **Circuit:** DP22-09 **Schematic:** 9321-LL-3140 SH 12

Device ID	Mfgr/Model	Path	Scenario	Time	Node Voltage	Path VD	Device Voltage	Required Voltage	Voltage Delta	Y/N
1X/RS-BFP22 TT	WHSE / BFD	1	CMP22	W	110.80	0.00	110.80	97.00	13.80	Y
20/RSV-BFP22 TT	UNKNOWN / UNKNOWN	1	CMP22	W	110.80	0.00	110.80	103.00	7.80	Y
20/TT-1-BFP22 TT	UNKNOWN / UNKNOWN	1	CMP22	W	110.80	0.00	110.80	103.00	7.80	Y
20/TT-2-BFP22 TT	UNKNOWN / UNKNOWN	1	CMP22	W	110.80	0.00	110.80	103.00	7.80	Y
3RS/BFP2	WHSE / BFD	1	CMP22	W	110.80	0.00	110.80	97.00	13.80	Y
63/BOX-BFP22 TT	UNKNOWN / UNKNOWN	1	CMP22	W	110.80	0.00	110.80	101.00	9.80	Y
63/DPX-BFP22 TT	UNKNOWN / UNKNOWN	1	CMP22	W	110.80	0.00	110.80	101.00	9.80	Y
63X/BFP2	UNKNOWN / UNKNOWN	1	CMP22	W	110.80	0.00	110.80	101.00	9.80	Y
63X/LV-BFP22 TT	WHSE / BFD	1	CMP22	W	110.80	0.00	110.80	97.00	13.80	Y
63X/SCMIN-BFP22 TT	UNKNOWN / UNKNOWN	1	CMP22	W	110.80	0.00	110.80	101.00	9.80	Y
63X1/BFP2	WHSE / BFD	1	CMP22	W	110.80	0.00	110.80	97.00	13.80	Y
63X2/BFP2	WHSE / BFD	1	CMP22	W	110.80	0.00	110.80	97.00	13.80	Y
74-BFP22 T T	WHSE / BFD	1	CMP22	W	110.80	0.00	110.80	97.00	13.80	Y
UNKWN-RELAY-BFP22 T T	UNKNOWN / UNKNOWN	1	CMP22	W	110.80	0.00	110.80	101.00	9.80	Y

Path Voltage Drop Summary

Generation Date: 08/23/2005 06:30 pm

Battery: 22 **Node:** 17 **Circuit:** DP22-09 **Schematic:** 9321-LL-3140 SH 14

Device ID	Mfgr/Model	Path	Scenario	Time	Node Voltage	Path VD	Device Voltage	Required Voltage	Voltage Delta	Y/N
20/LP-SVC2	UNKNOWN / SOV - OPERATES AS VI	1	CMP22	W	110.80	0.00	110.80	103.00	7.80	Y
33X-BFP22 LPSVC2	UNKNOWN / UNKNOWN	1	CMP22	W	110.80	0.00	110.80	101.00	9.80	Y
33X/1-BFP22 LPSVC2	UNKNOWN / UNKNOWN	1	CMP22	W	110.80	0.00	110.80	101.00	9.80	Y
33X/2-BFP22 LPSVC2	UNKNOWN / UNKNOWN	1	CMP22	W	110.80	0.00	110.80	101.00	9.80	Y
33X/3-BFP22 LPSVC2	UNKNOWN / UNKNOWN	1	CMP22	W	110.80	0.00	110.80	101.00	9.80	Y
72L/BFP22 LPSVC2	UNKNOWN / UNKNOWN	1	CMP22	W	110.80	0.00	110.80	101.00	9.80	Y
72R/BFP22 LPSVC2	UNKNOWN / UNKNOWN	1	CMP22	W	110.80	0.00	110.80	101.00	9.80	Y

Path Voltage Drop Summary

Generation Date: 08/23/2005 06:30 pm

Battery: 22 **Node:** 17 **Circuit:** DP22-09 **Schematic:** 9321-LL-3140 SH 15

Device ID	Mfgr/Model	Path	Scenario	Time	Node Voltage	Path VD	Device Voltage	Required Voltage	Voltage Delta	Y/N
20/HP-SVC2	UNKNOWN / SOV - OPERATES	1	CMP22	W	110.80	0.00	110.80	103.00	7.80	Y
33X/1-BFP22 HPSVC2	UNKNOWN / UNKNOWN	1	CMP22	W	110.80	0.00	110.80	101.00	9.80	Y
33X/2-BFP22 HPSVC2	UNKNOWN / UNKNOWN	1	CMP22	W	110.80	0.00	110.80	101.00	9.80	Y
33X/3-BFP22 HPSVC2	UNKNOWN / UNKNOWN	1	CMP22	W	110.80	0.00	110.80	101.00	9.80	Y
72L/BFP22 HPSVC2	UNKNOWN / UNKNOWN	1	CMP22	W	110.80	0.00	110.80	101.00	9.80	Y
72R/BFP22 HPSVC2	UNKNOWN / UNKNOWN	1	CMP22	W	110.80	0.00	110.80	101.00	9.80	Y

Path Voltage Drop Summary

Generation Date: 08/23/2005 06:30 pm

Battery: 22 **Node:** 17 **Circuit:** DP22-09 **Schematic:** 9321-LL-3140 SH 16

Device ID	Mfgr/Model	Path	Scenario	Time	Node Voltage	Path VD	Device Voltage	Required Voltage	Voltage Delta	Y/N
20/BFPR2	UNKNOWN / UNKNOWN	1	CMP22	W	110.80	0.00	110.80	103.00	7.80	Y
80X1/BFPR2	UNKNOWN / FLOW SWITCH	1	CMP22	W	110.80	0.00	110.80	97.00	13.80	Y
TD/BFPR2	UNKNOWN / UNKNOWN	1	CMP22	W	110.80	0.00	110.80	101.00	9.80	Y

Path Voltage Drop Summary

Generation Date: 08/23/2005 06:30 pm

Battery: 22 **Node:** 17 **Circuit:** DP22-11 **Schematic:** 225232

Device ID	Mfgr/Model	Path	Scenario	Time	Node Voltage	Path VD	Device Voltage	Required Voltage	Voltage Delta	Y/N
2/CC1-1	AGASTAT / AGA 2412	1	CMP22	W	110.80	0.00	110.80	97.00	13.80	Y
2/CC5	AGASTAT / UNKNOWN	1	CMP22	W	110.80	0.00	110.80	101.00	9.80	Y
2/SW3-2	AGASTAT / AGA 2412	1	CMP22	W	110.80	0.00	110.80	97.00	13.80	Y
2/SW6-2	AGASTAT / AGA 2412	1	CMP22	W	110.80	0.00	110.80	97.00	13.80	Y
52/EGX	WHSE / BFD	1	CMP22	W	110.80	0.00	110.80	97.00	13.80	Y
52/SWX	WHSE / BFD	1	CMP22	W	110.80	0.00	110.80	97.00	13.80	Y

Path Voltage Drop Summary

Generation Date: 08/23/2005 06:30 pm

Battery: 22 **Node:** 17 **Circuit:** DP22-11 **Schematic:** B225227

Device ID	Mfgr/Model	Path	Scenario	Time	Node Voltage	Path VD	Device Voltage	Required Voltage	Voltage Delta	Y/N
52/CS1X	WHSE / BFD	1	CMP22	W	110.80	0.00	110.80	97.00	13.80	Y
52/CS2X	WHSE / BFD	1	CMP22	W	110.80	0.00	110.80	97.00	13.80	Y
52/SI1X	WHSE / BFD	1	CMP22	W	110.80	0.00	110.80	97.00	13.80	Y
52/SI2X	WHSE / BFD	1	CMP22	W	110.80	0.00	110.80	97.00	13.80	Y
52/SI3X	WHSE / BFD	1	CMP22	W	110.80	0.00	110.80	97.00	13.80	Y
SI/RL	WHSE / BFD	1	CMP22	W	110.80	0.00	110.80	97.00	13.80	Y

Path Voltage Drop Summary

Generation Date: 08/23/2005 06:30 pm

Battery: 22 **Node:** 17 **Circuit:** DP22-11 **Schematic:** B225228

Device ID	Mfgr/Model	Path	Scenario	Time	Node Voltage	Path VD	Device Voltage	Required Voltage	Voltage Delta	Y/N
2/CC1	AGASTAT / AGA 2412	1	CMP22	W	110.80	0.00	110.80	97.00	13.80	Y
2/CC2	AGASTAT / AGA 2412	1	CMP22	W	110.80	0.00	110.80	97.00	13.80	Y
2/CC4	AGASTAT / AGA 2412	1	CMP22	W	110.80	0.00	110.80	97.00	13.80	Y
2/SW2	AGASTAT / AGA 2412	1	CMP22	W	110.80	0.00	110.80	97.00	13.80	Y
2/SW3-1	AGASTAT / AGA 2412	1	CMP22	W	110.80	0.00	110.80	97.00	13.80	Y
2/SW5	AGASTAT / AGA 2412	1	CMP22	W	110.80	0.00	110.80	97.00	13.80	Y
2/SW6-1	AGASTAT / AGA 2412	1	CMP22	W	110.80	0.00	110.80	97.00	13.80	Y
52/CC1X	WHSE / BFD	1	CMP22	W	110.80	0.00	110.80	97.00	13.80	Y
52/CC2X	WHSE / BFD	1	CMP22	W	110.80	0.00	110.80	97.00	13.80	Y
52/CC3X	WHSE / BFD	1	CMP22	W	110.80	0.00	110.80	97.00	13.80	Y

Path Voltage Drop Summary

Generation Date: 08/23/2005 06:30 pm

Battery: 22 **Node:** 17 **Circuit:** DP22-11 **Schematic:** B225229

Device ID	Mfgr/Model	Path	Scenario	Time	Node Voltage	Path VD	Device Voltage	Required Voltage	Voltage Delta	Y/N
52/RHR2/X	WHSE / BFD	1	CMP22	W	110.80	0.00	110.80	97.00	13.80	Y

Path Voltage Drop Summary

Generation Date: 08/23/2005 06:30 pm

Battery: 22 **Node:** 17 **Circuit:** DP22-11 **Schematic:** B225231

Device ID	Mfgr/Model	Path	Scenario	Time	Node Voltage	Path VD	Device Voltage	Required Voltage	Voltage Delta	Y/N
52/SW1X	WHSE / BFD	1	CMP22	W	110.80	0.00	110.80	97.00	13.80	Y
52/SW2X	WHSE / BFD	1	CMP22	W	110.80	0.00	110.80	97.00	13.80	Y
52/SW3X	WHSE / BFD	1	CMP22	W	110.80	0.00	110.80	97.00	13.80	Y
52/SW4X	WHSE / BFD	1	CMP22	W	110.80	0.00	110.80	97.00	13.80	Y
52/SW5X	WHSE / BFD	1	CMP22	W	110.80	0.00	110.80	97.00	13.80	Y
52/SW6X	WHSE / BFD	1	CMP22	W	110.80	0.00	110.80	97.00	13.80	Y

Path Voltage Drop Summary

Generation Date: 08/23/2005 06:30 pm

Battery: 22 **Node:** 17 **Circuit:** DP22-11 **Schematic:** B225233

Device ID	Mfgr/Model	Path	Scenario	Time	Node Voltage	Path VD	Device Voltage	Required Voltage	Voltage Delta	Y/N
RS6/X	WHSE / BFD	1	CMP22	W	110.80	0.00	110.80	97.00	13.80	Y

Path Voltage Drop Summary

Generation Date: 08/23/2005 06:30 pm

Battery: 22 **Node:** 17 **Circuit:** DP22-11 **Schematic:** B225234

Device ID	Mfgr/Model	Path	Scenario	Time	Node Voltage	Path VD	Device Voltage	Required Voltage	Voltage Delta	Y/N
1810/X	WHSE / BFD	1	CMP22	W	110.80	0.00	110.80	97.00	13.80	Y

Path Voltage Drop Summary

Generation Date: 08/23/2005 06:30 pm

Battery: 22 **Node:** 17 **Circuit:** DP22-12 **Schematic:** 225188

Device ID	Mfgr/Model	Path	Scenario	Time	Node Voltage	Path VD	Device Voltage	Required Voltage	Voltage Delta	Y/N
SOV1629	ASCO / CAT. NO. LB-83146	1	CMP22	W	110.80	0.00	110.80	103.00	7.80	Y
SOV1630	ASCO / CAT. NO. LB-83146	1	CMP22	W	110.80	0.00	110.80	103.00	7.80	Y
SOV1631	ASCO / CAT. NO. LB-83146	1	CMP22	W	110.80	0.00	110.80	103.00	7.80	Y

Path Voltage Drop Summary

Generation Date: 08/23/2005 06:30 pm

Battery: 22 **Node:** 17 **Circuit:** DP22-12 **Schematic:** 225209

Device ID	Mfgr/Model	Path	Scenario	Time	Node Voltage	Path VD	Device Voltage	Required Voltage	Voltage Delta	Y/N
SOV1003A	UNKNOWN / UNKNOWN	1	CMP22	W	110.80	0.00	110.80	103.00	7.80	Y
SOV1003B	UNKNOWN / UNKNOWN	1	CMP22	W	110.80	0.00	110.80	103.00	7.80	Y
SOV1609	ASCO / CAT. NO. NP831655V	1	CMP22	W	110.80	0.00	110.80	91.00	19.80	Y
TD-LCV1003A	AGASTAT / UNKNOWN	1	CMP22	W	110.80	0.00	110.80	101.00	9.80	Y
TD-LCV1003B	AGASTAT / UNKNOWN	1	CMP22	W	110.80	0.00	110.80	101.00	9.80	Y

Path Voltage Drop Summary

Generation Date: 08/23/2005 06:30 pm

Battery: 22 **Node:** 17 **Circuit:** DP22-12 **Schematic:** B209864

Device ID	Mfgr/Model	Path	Scenario	Time	Node Voltage	Path VD	Device Voltage	Required Voltage	Voltage Delta	Y/N
SOV523	ASCO / CAT. NO. NP8314C28V	1	CMP22	W	110.80	0.00	110.80	91.00	19.80	Y

Path Voltage Drop Summary

Generation Date: 08/23/2005 06:30 pm

Battery: 22 **Node:** 17 **Circuit:** DP22-12 **Schematic:** B225205

Device ID	Mfgr/Model	Path	Scenario	Time	Node Voltage	Path VD	Device Voltage	Required Voltage	Voltage Delta	Y/N
SOV018	ASCO / CAT. NO. LB-83146	1	CMP22	W	110.80	0.00	110.80	103.00	7.80	Y
SOV1036A	ASCO / CAT. NO. LB-83146	1	CMP22	W	110.80	0.00	110.80	103.00	7.80	Y
SOV1037A	ASCO / CAT. NO. LB-83146	1	CMP22	W	110.80	0.00	110.80	103.00	7.80	Y
SOV1038A	ASCO / CAT. NO. LB-83146	1	CMP22	W	110.80	0.00	110.80	103.00	7.80	Y
SOV1039A	ASCO / CAT. NO. LB-83146	1	CMP22	W	110.80	0.00	110.80	103.00	7.80	Y
SOV1632	ASCO / CAT. NO. LB-83146	1	CMP22	W	110.80	0.00	110.80	103.00	7.80	Y
SOV1677	ASCO / CAT. NO. LB-83146	1	CMP22	W	110.80	0.00	110.80	103.00	7.80	Y

Path Voltage Drop Summary

Generation Date: 08/23/2005 06:30 pm

Battery: 22 **Node:** 17 **Circuit:** DP22-12 **Schematic:** B225207

Device ID	Mfgr/Model	Path	Scenario	Time	Node Voltage	Path VD	Device Voltage	Required Voltage	Voltage Delta	Y/N
SOV1036B	ASCO / CAT. NO. LB-83146	1	CMP22	W	110.80	0.00	110.80	103.00	7.80	Y
SOV1037B	ASCO / CAT. NO. LB-83146	1	CMP22	W	110.80	0.00	110.80	103.00	7.80	Y
SOV1038B	ASCO / CAT. NO. LB-83146	1	CMP22	W	110.80	0.00	110.80	103.00	7.80	Y
SOV1039B	ASCO / CAT. NO. LB-83146	1	CMP22	W	110.80	0.00	110.80	103.00	7.80	Y

Path Voltage Drop Summary

Generation Date: 08/23/2005 06:30 pm

Battery: 22 **Node:** 17 **Circuit:** DP22-12 **Schematic:** UNKNOWN

Device ID	Mfgr/Model	Path	Scenario	Time	Node Voltage	Path VD	Device Voltage	Required Voltage	Voltage Delta	Y/N
ANNUN-WASTE CP	UNKNOWN / UNKNOWN ANNUNCIATOR	1	CMP22	W	110.80	0.00	110.80	101.00	9.80	Y

Path Voltage Drop Summary

Generation Date: 08/23/2005 06:30 pm

Battery: 22 **Node:** 17 **Circuit:** DP22-13 **Schematic:** 9321-LL-3131 SH 11

Device ID	Mfgr/Model	Path	Scenario	Time	Node Voltage	Path VD	Device Voltage	Required Voltage	Voltage Delta	Y/N
1X/AF3-AFPR3	WHSE / BFD	1	CMP22	W	110.80	0.00	110.80	97.00	13.80	Y
20/AFPR3	ASCO / CAT. NO. NP8316A55V	1	CMP22	W	110.80	0.00	110.80	91.00	19.80	Y

Path Voltage Drop Summary

Generation Date: 08/23/2005 06:30 pm

Battery: 22 **Node:** 17 **Circuit:** DP22-13 **Schematic:** 9321-LL-3131 SH 11A

Device ID	Mfgr/Model	Path	Scenario	Time	Node Voltage	Path VD	Device Voltage	Required Voltage	Voltage Delta	Y/N
80X1A/AFPR3	GE / TYPE HGA	1	CMP22	W	110.80	0.00	110.80	101.00	9.80	Y
80X2A/AFPR3	GE / TYPE HGA	1	CMP22	W	110.80	0.00	110.80	101.00	9.80	Y

Path Voltage Drop Summary

Generation Date: 08/23/2005 06:30 pm

Battery: 22 **Node:** 17 **Circuit:** DP22-14 **Schematic:** 9321-LL-3135 SH 02

Device ID	Mfgr/Model	Path	Scenario	Time	Node Voltage	Path VD	Device Voltage	Required Voltage	Voltage Delta	Y/N
30/4-TRFOA	UNKNOWN / UNKNOWN	1	CMP22	W	110.80	0.00	110.80	101.00	9.80	Y
30/X1-TRFOA	WHSE / BFD	1	CMP22	W	110.80	0.00	110.80	97.00	13.80	Y
30/X2-TRFOA	WHSE / BFD	1	CMP22	W	110.80	0.00	110.80	97.00	13.80	Y
30/X3-TRFOA	WHSE / BFD	1	CMP22	W	110.80	0.00	110.80	97.00	13.80	Y
30/X4-TRFOA	WHSE / BFD	1	CMP22	W	110.80	0.00	110.80	97.00	13.80	Y
30/X5-TRFOA	WHSE / BFD	1	CMP22	W	110.80	0.00	110.80	97.00	13.80	Y
30/X6-TRFOA	WHSE / BFD	1	CMP22	W	110.80	0.00	110.80	97.00	13.80	Y
30/X7-TRFOA	WHSE / BFD	1	CMP22	W	110.80	0.00	110.80	97.00	13.80	Y
30/X8-TRFOA	WHSE / BFD	1	CMP22	W	110.80	0.00	110.80	97.00	13.80	Y
30FX-TRFOA	UNKNOWN / UNKNOWN	1	CMP22	W	110.80	0.00	110.80	101.00	9.80	Y
30X1-TRFOA	UNKNOWN / UNKNOWN	1	CMP22	W	110.80	0.00	110.80	101.00	9.80	Y
HORN-TRFOA	PANALARM / HORN FOR ANNUNCIATOR	1	CMP22	W	110.80	0.00	110.80	101.00	9.80	Y
M4-TRFOA	PANALARM / FLASHER RELAY, MODEL	1	CMP22	W	110.80	0.00	110.80	101.00	9.80	Y
REACTOR-FIRST OUT ANN	PANALARM / SERIES 10, MODEL 44	1	CMP22	W	110.80	0.00	110.80	94.75	16.05	Y
TURB-FIRST OUT ANN	PANALARM / SERIES 10, MODEL 44	1	CMP22	W	110.80	0.00	110.80	94.75	16.05	Y

Path Voltage Drop Summary

Generation Date: 08/23/2005 06:30 pm

Battery: 22 **Node:** 17 **Circuit:** DP22-15 **Schematic:** 311906

Device ID	Mfgr/Model	Path	Scenario	Time	Node Voltage	Path VD	Device Voltage	Required Voltage	Voltage Delta	Y/N
33X/PCV455C-PCV455C	UNKNOWN / UNKNOWN	1	CMP22	W	110.80	0.00	110.80	101.00	9.80	Y
SOV455C	ASCO / CAT. NO. NP8316A55V	1	CMP22	W	110.80	0.00	110.80	91.00	19.80	Y

Path Voltage Drop Summary

Generation Date: 08/23/2005 06:30 pm

Battery: 22 **Node:** 17 **Circuit:** DP22-15 **Schematic:** 9321-LL-3131 SH 15A

Device ID	Mfgr/Model	Path	Scenario	Time	Node Voltage	Path VD	Device Voltage	Required Voltage	Voltage Delta	Y/N
20-4-SW CNTL VLVS	ASCO / CAT. NO. NPK8316A74V	1	CMP22	W	110.80	0.00	110.80	91.00	19.80	Y
20-6-SW CNTL VLVS	ASCO / CAT. NO. NP8316A55V	1	CMP22	W	110.80	0.00	110.80	91.00	19.80	Y
20-8-SW CNTL VLVS	ASCO / CAT. NO. 8211D3	1	CMP22	W	110.80	0.00	110.80	103.00	7.80	Y

Path Voltage Drop Summary

Generation Date: 08/23/2005 06:30 pm

Battery: 22 **Node:** 17 **Circuit:** DP22-15 **Schematic:** B207581

Device ID	Mfgr/Model	Path	Scenario	Time	Node Voltage	Path VD	Device Voltage	Required Voltage	Voltage Delta	Y/N
SOV1171-TCV1105	ASCO / CAT. NO. NP831655E	1	CMP22	W	110.80	0.00	110.80	91.00	19.80	Y
SOV5005-TCV1105	ASCO / CAT. NO. 8211D3	1	CMP22	W	110.80	0.00	110.80	103.00	7.80	Y

Path Voltage Drop Summary

Generation Date: 08/23/2005 06:30 pm

Battery: 22 **Node:** 17 **Circuit:** DP22-15 **Schematic:** B225181

Device ID	Mfgr/Model	Path	Scenario	Time	Node Voltage	Path VD	Device Voltage	Required Voltage	Voltage Delta	Y/N
20-V204B	UNKNOWN / UNKNOWN	1	CMP22	W	110.80	0.00	110.80	103.00	7.80	Y
SOV213	ASCO / CAT. NO. NP8316A55V	1	CMP22	W	110.80	0.00	110.80	91.00	19.80	Y
SOV246	ASCO / CAT. NO. NP831655V	1	CMP22	W	110.80	0.00	110.80	91.00	19.80	Y
SOV261A (2)	ASCO / CAT. NO. NP831655V	1	CMP22	W	110.80	0.00	110.80	91.00	19.80	Y

Path Voltage Drop Summary

Generation Date: 08/23/2005 06:30 pm

Battery: 22 **Node:** 17 **Circuit:** DP22-15 **Schematic:** B225182

Device ID	Mfgr/Model	Path	Scenario	Time	Node Voltage	Path VD	Device Voltage	Required Voltage	Voltage Delta	Y/N
S0V261D	ASCO / CAT. NO. NP831655V	1	CMP22	W	110.80	0.00	110.80	91.00	19.80	Y
SOV1870	UNKNOWN / UNKNOWN	1	CMP22	W	110.80	0.00	110.80	103.00	7.80	Y
SOV310	ASCO / CAT. NO. LBX-831614	1	CMP22	W	110.80	0.00	110.80	103.00	7.80	Y

Path Voltage Drop Summary

Generation Date: 08/23/2005 06:30 pm

Battery: 22 **Node:** 17 **Circuit:** DP22-15 **Schematic:** B225183

Device ID	Mfgr/Model	Path	Scenario	Time	Node Voltage	Path VD	Device Voltage	Required Voltage	Voltage Delta	Y/N
SOV839C	ASCO / CAT. NO. LBX-831614	1	CMP22	W	110.80	0.00	110.80	103.00	7.80	Y
SOV839D	ASCO / CAT. NO. LBX-831614	1	CMP22	W	110.80	0.00	110.80	103.00	7.80	Y
SOV839G	ASCO / CAT. NO. LBX-831614	1	CMP22	W	110.80	0.00	110.80	103.00	7.80	Y
SOV839H	ASCO / CAT. NO. LBX-831614	1	CMP22	W	110.80	0.00	110.80	103.00	7.80	Y

Path Voltage Drop Summary

Generation Date: 08/23/2005 06:30 pm

Battery: 22 **Node:** 17 **Circuit:** DP22-15 **Schematic:** B225184

Device ID	Mfgr/Model	Path	Scenario	Time	Node Voltage	Path VD	Device Voltage	Required Voltage	Voltage Delta	Y/N
SOV553B	ASCO / CAT. NO. LB-83146	1	CMP22	W	110.80	0.00	110.80	103.00	7.80	Y
SOV553D	ASCO / CAT. NO. LB-83146	1	CMP22	W	110.80	0.00	110.80	103.00	7.80	Y
SOV560	ASCO / CAT. NO. LB-83146	1	CMP22	W	110.80	0.00	110.80	103.00	7.80	Y

Path Voltage Drop Summary

Generation Date: 08/23/2005 06:30 pm

Battery: 22 **Node:** 17 **Circuit:** DP22-15 **Schematic:** B225185

Device ID	Mfgr/Model	Path	Scenario	Time	Node Voltage	Path VD	Device Voltage	Required Voltage	Voltage Delta	Y/N
SOV890B	ASCO / CAT. NO. LBX-831614	1	CMP22	W	110.80	0.00	110.80	103.00	7.80	Y
SOV890D	ASCO / CAT. NO. LBX-831614	1	CMP22	W	110.80	0.00	110.80	103.00	7.80	Y
SOV891B	ASCO / CAT. NO. LBX-831614	1	CMP22	W	110.80	0.00	110.80	103.00	7.80	Y
SOV891D	ASCO / CAT. NO. LBX-831614	1	CMP22	W	110.80	0.00	110.80	103.00	7.80	Y
SOV896B	ASCO / CAT. NO. LBX-831614	1	CMP22	W	110.80	0.00	110.80	103.00	7.80	Y
SOV896D	ASCO / CAT. NO. NP8316A55V	1	CMP22	W	110.80	0.00	110.80	91.00	19.80	Y

Path Voltage Drop Summary

Generation Date: 08/23/2005 06:30 pm

Battery: 22 **Node:** 17 **Circuit:** DP22-15 **Schematic:** B225191

Device ID	Mfgr/Model	Path	Scenario	Time	Node Voltage	Path VD	Device Voltage	Required Voltage	Voltage Delta	Y/N
LCV112B	UNKNOWN / UNKNOWN	1	CMP22	W	110.80	0.00	110.80	103.00	7.80	Y
SOV017	ASCO / CAT. NO. NP8316A55V	1	CMP22	W	110.80	0.00	110.80	91.00	19.80	Y

Path Voltage Drop Summary

Generation Date: 08/23/2005 06:30 pm

Battery: 22 **Node:** 17 **Circuit:** DP22-15 **Schematic:** B225192

Device ID	Mfgr/Model	Path	Scenario	Time	Node Voltage	Path VD	Device Voltage	Required Voltage	Voltage Delta	Y/N
SOV149-TCV149	ASCO / CAT. NO. NP8316A55V	1	CMP22	W	110.80	0.00	110.80	91.00	19.80	Y

Path Voltage Drop Summary

Generation Date: 08/23/2005 06:30 pm

Battery: 22 **Node:** 17 **Circuit:** DP22-15 **Schematic:** B225193

Device ID	Mfgr/Model	Path	Scenario	Time	Node Voltage	Path VD	Device Voltage	Required Voltage	Voltage Delta	Y/N
LVC459	UNKNOWN / UNKNOWN	1	CMP22	W	110.80	0.00	110.80	103.00	7.80	Y
SOV1276A	ASCO / CAT. NO. NP8316A55V	1	CMP22	W	110.80	0.00	110.80	91.00	19.80	Y

Path Voltage Drop Summary

Generation Date: 08/23/2005 06:30 pm

Battery: 22 **Node:** 17 **Circuit:** DP22-15 **Schematic:** B228092

Device ID	Mfgr/Model	Path	Scenario	Time	Node Voltage	Path VD	Device Voltage	Required Voltage	Voltage Delta	Y/N
74/DG21-21 DG TROUB	WHSE / SG	1	CMP22	W	110.80	0.00	110.80	101.00	9.80	Y
74/DG22-22 DG TROUB	WHSE / SG	1	CMP22	W	110.80	0.00	110.80	101.00	9.80	Y
74/DG23-23 DG TROUB	WHSE / SG	1	CMP22	W	110.80	0.00	110.80	101.00	9.80	Y

Path Voltage Drop Summary

Generation Date: 08/23/2005 06:30 pm

Battery: 22 **Node:** 17 **Circuit:** DP22-16 **Schematic:** 9321-LL-3130 SH 03

Device ID	Mfgr/Model	Path	Scenario	Time	Node Voltage	Path VD	Device Voltage	Required Voltage	Voltage Delta	Y/N
1/30 HP MOTOR-LLV1	UNKNOWN / 1/30 HP MOTOR,	1	CMP22	W	110.80	0.00	110.80	101.00	9.80	Y
LRB1-LLV1	WHSE / MG-6	1	CMP22	W	110.80	0.00	110.80	101.00	9.80	Y
M/LLV1-LLV1	UNKNOWN / FIELD FOR 1/30 HP	1	CMP22	W	110.80	0.00	110.80	101.00	9.80	Y
TD/LRB1	AGASTAT / AGA 2412	1	CMP22	W	110.80	0.00	110.80	97.00	13.80	Y
TD1-LRB1	AGASTAT / 7000 SERIES	1	CMP22	W	110.80	0.00	110.80	101.00	9.80	Y
TD1X/LRB-1	UNKNOWN / UNKNOWN	1	CMP22	W	110.80	0.00	110.80	101.00	9.80	Y
TD2X/LRB-1	SCCA / MODEL 1080811, TIME	1	CMP22	W	110.80	0.00	110.80	101.00	9.80	Y
TDX/LRB1	WHSE / SG	1	CMP22	W	110.80	0.00	110.80	101.00	9.80	Y

Path Voltage Drop Summary

Generation Date: 08/23/2005 06:30 pm

Battery: 22 **Node:** 17 **Circuit:** DP22-17 **Schematic:** 9321-LL-3130 SH 06

Device ID	Mfgr/Model	Path	Scenario	Time	Node Voltage	Path VD	Device Voltage	Required Voltage	Voltage Delta	Y/N
40-GEN BU LO	UNKNOWN / UNKNOWN	1	CMP22	W	110.80	0.00	110.80	101.00	9.80	Y
40X-GEN BU LO	WHSE / SG	1	CMP22	W	110.80	0.00	110.80	101.00	9.80	Y
46/1-GEN BU LO	UNKNOWN / UNKNOWN	1	CMP22	W	110.80	0.00	110.80	101.00	9.80	Y
60-GEN BU LO	UNKNOWN / UNKNOWN	1	CMP22	W	110.80	0.00	110.80	101.00	9.80	Y
62/BU	UNKNOWN / UNKNOWN	1	CMP22	W	110.80	0.00	110.80	101.00	9.80	Y
62BU1/AUX	AGASTAT / TYPE TR-5	1	CMP22	W	110.80	0.00	110.80	101.00	9.80	Y
63X/BU	UNKNOWN / UNKNOWN	1	CMP22	W	110.80	0.00	110.80	101.00	9.80	Y
81BU/1	UNKNOWN / UNKNOWN	1	CMP22	W	110.80	0.00	110.80	101.00	9.80	Y
81BU/2	UNKNOWN / UNKNOWN	1	CMP22	W	110.80	0.00	110.80	101.00	9.80	Y
81BU/62X	AGASTAT / UNKNOWN	1	CMP22	W	110.80	0.00	110.80	101.00	9.80	Y
86/BU	WHSE / TYPE WL	1	CMP22	W	110.80	0.00	110.80	71.00	39.80	Y
86X-1/BU	UNKNOWN / UNKNOWN	1	CMP22	W	110.80	0.00	110.80	101.00	9.80	Y
TR 1-GEN BU LO	UNKNOWN / UNKNOWN	1	CMP22	W	110.80	0.00	110.80	101.00	9.80	Y

Path Voltage Drop Summary

Generation Date: 08/23/2005 06:30 pm

Battery: 22 **Node:** 17 **Circuit:** DP22-17 **Schematic:** A207325

Device ID	Mfgr/Model	Path	Scenario	Time	Node Voltage	Path VD	Device Voltage	Required Voltage	Voltage Delta	Y/N
86X/BU	WHSE / TYPE WL	1	CMP22	W	110.80	0.00	110.80	71.00	39.80	Y

Path Voltage Drop Summary

Generation Date: 08/23/2005 06:30 pm

Battery: 22 **Node:** 17 **Circuit:** DP22-18 **Schematic:** 199B23

Device ID	Mfgr/Model	Path	Scenario	Time	Node Voltage	Path VD	Device Voltage	Required Voltage	Voltage Delta	Y/N
717-FW-ISOL-B	WHSE / BFD	1	CMP22	W	110.80	0.00	110.80	97.00	13.80	Y
F/11X	WHSE / BFD	1	CMP22	W	110.80	0.00	110.80	97.00	13.80	Y
F/12X	WHSE / BFD	1	CMP22	W	110.80	0.00	110.80	97.00	13.80	Y
F/13X	WHSE / BFD	1	CMP22	W	110.80	0.00	110.80	97.00	13.80	Y
F/14X	WHSE / BFD	1	CMP22	W	110.80	0.00	110.80	97.00	13.80	Y
F/15X	WHSE / BFD	1	CMP22	W	110.80	0.00	110.80	97.00	13.80	Y
F/16X	WHSE / BFD	1	CMP22	W	110.80	0.00	110.80	97.00	13.80	Y

Path Voltage Drop Summary

Generation Date: 08/23/2005 06:30 pm

Battery: 22 **Node:** 17 **Circuit:** DP22-18 **Schematic:** 225018

Device ID	Mfgr/Model	Path	Scenario	Time	Node Voltage	Path VD	Device Voltage	Required Voltage	Voltage Delta	Y/N
2/SI/D2-B SI ACT	AGASTAT / AGA 2412	1	CMP22	W	110.80	0.00	110.80	97.00	13.80	Y
74X10-B SI ACT	WHSE / BFD	1	CMP22	W	110.80	0.00	110.80	97.00	13.80	Y
SI/20X-B SI ACT	WHSE / BFD	1	CMP22	W	110.80	0.00	110.80	97.00	13.80	Y
SI/21X-B SI ACT	WHSE / BFD	1	CMP22	W	110.80	0.00	110.80	97.00	13.80	Y
SI/22X-B SI ACT	WHSE / BFD	1	CMP22	W	110.80	0.00	110.80	97.00	13.80	Y
SI/23X-B SI ACT	WHSE / BFD	1	CMP22	W	110.80	0.00	110.80	97.00	13.80	Y
SI/24X-B SI ACT	WHSE / BFD	1	CMP22	W	110.80	0.00	110.80	97.00	13.80	Y
SI/25AX-B SI ACT	WHSE / BFD	1	CMP22	W	110.80	0.00	110.80	97.00	13.80	Y
SI/25X-B SI ACT	WHSE / BFD	1	CMP22	W	110.80	0.00	110.80	97.00	13.80	Y
SI/26X-B SI ACT	WHSE / BFD	1	CMP22	W	110.80	0.00	110.80	97.00	13.80	Y
SI/27X-B SI ACT	WHSE / BFD	1	CMP22	W	110.80	0.00	110.80	97.00	13.80	Y
SI/28X-B SI ACT	WHSE / BFD	1	CMP22	W	110.80	0.00	110.80	97.00	13.80	Y
SIA/2-K1-B SI ACT	ELECTROSW / ER-LOR, K1 COIL	1	CMP22	W	110.80	0.00	110.80	101.00	9.80	Y
SIA/2-R-B SI ACT	ELECTROSW / ER-LOR, R COIL	1	CMP22	W	110.80	0.00	110.80	101.00	9.80	Y
SIA/2-T-B SI ACT	ELECTROSW / ER-LOR, T COIL	1	CMP22	W	110.80	0.00	110.80	91.00	19.80	Y
SIB2-B SI ACT	WHSE / BFD	1	CMP22	W	110.80	0.00	110.80	97.00	13.80	Y
SIM/2-K1-B SI ACT	ELECTROSW / ER-LOR, K1 COIL	1	CMP22	W	110.80	0.00	110.80	101.00	9.80	Y
SIM/2-R-B SI ACT	ELECTROSW / ER-LOR, R COIL	1	CMP22	W	110.80	0.00	110.80	101.00	9.80	Y
SIM/2-T-B SI ACT	ELECTROSW / ER-LOR, T COIL	1	CMP22	W	110.80	0.00	110.80	91.00	19.80	Y

Path Voltage Drop Summary

Generation Date: 08/23/2005 06:30 pm

Battery: 22 **Node:** 17 **Circuit:** DP22-18 **Schematic:** 225026

Device ID	Mfgr/Model	Path	Scenario	Time	Node Voltage	Path VD	Device Voltage	Required Voltage	Voltage Delta	Y/N
AS2	WHSE / BFD	1	CMP22	W	110.80	0.00	110.80	97.00	13.80	Y
CA2-1X	WHSE / BFD	1	CMP22	W	110.80	0.00	110.80	97.00	13.80	Y
CA2-2X	WHSE / BFD	1	CMP22	W	110.80	0.00	110.80	97.00	13.80	Y
CA2-3X	WHSE / BFD	1	CMP22	W	110.80	0.00	110.80	97.00	13.80	Y
CA2-4X	WHSE / BFD	1	CMP22	W	110.80	0.00	110.80	97.00	13.80	Y
CA2-K1	ELECTROSW / ER-LOR, K1 COIL	1	CMP22	W	110.80	0.00	110.80	101.00	9.80	Y
CA2-R	ELECTROSW / ER-LOR, R COIL	1	CMP22	W	110.80	0.00	110.80	101.00	9.80	Y
CA2-T	ELECTROSW / ER-LOR, T COIL	1	CMP22	W	110.80	0.00	110.80	91.00	19.80	Y
CB2-1X	WHSE / BFD	1	CMP22	W	110.80	0.00	110.80	97.00	13.80	Y
CB2-K1	ELECTROSW / ER-LOR, K1 COIL	1	CMP22	W	110.80	0.00	110.80	101.00	9.80	Y
CB2-R	ELECTROSW / ER-LOR, R COIL	1	CMP22	W	110.80	0.00	110.80	101.00	9.80	Y
CB2-T	ELECTROSW / ER-LOR, T COIL	1	CMP22	W	110.80	0.00	110.80	91.00	19.80	Y
S2-1X	WHSE / BFD	1	CMP22	W	110.80	0.00	110.80	97.00	13.80	Y
S2-K1	ELECTROSW / ER-LOR, K1 COIL	1	CMP22	W	110.80	0.00	110.80	101.00	9.80	Y
S2-R	ELECTROSW / ER-LOR, R COIL	1	CMP22	W	110.80	0.00	110.80	101.00	9.80	Y
S2-T	ELECTROSW / ER-LOR, T COIL	1	CMP22	W	110.80	0.00	110.80	91.00	19.80	Y
V2-K1	ELECTROSW / ER-LOR, K1 COIL	1	CMP22	W	110.80	0.00	110.80	101.00	9.80	Y
V2-R	ELECTROSW / ER-LOR, R COIL	1	CMP22	W	110.80	0.00	110.80	101.00	9.80	Y
V2-T	ELECTROSW / ER-LOR, T COIL	1	CMP22	W	110.80	0.00	110.80	91.00	19.80	Y

Path Voltage Drop Summary

Generation Date: 08/23/2005 06:30 pm

Battery: 22 **Node:** 17 **Circuit:** DP22-18 **Schematic:** 9321-LL-3117 SH 02

Device ID	Mfgr/Model	Path	Scenario	Time	Node Voltage	Path VD	Device Voltage	Required Voltage	Voltage Delta	Y/N
27/2/2A-ICS-SG21B2A-U26A	WHSE / CV	1	CMP22	W	110.80	0.00	110.80	101.00	9.80	Y
27/2/5A-ICS-SG21B5A-U14A	WHSE / CV	1	CMP22	W	110.80	0.00	110.80	101.00	9.80	Y
27/2A/X11-SG21B2A-U26A	WHSE / TYPE SG, 12V COIL, W	1	CMP22	W	110.80	0.00	110.80	101.00	9.80	Y
27/2A/X12-SG21B2A-U26A	WHSE / BFD	1	CMP22	W	110.80	0.00	110.80	97.00	13.80	Y
27/2A/X13	WHSE / BFD	1	CMP22	W	110.80	0.00	110.80	97.00	13.80	Y
27/5A/X11-SG21B5A-U14A	WHSE / TYPE SG, 12V COIL, W	1	CMP22	W	110.80	0.00	110.80	101.00	9.80	Y
27/5A/X12-SG21B5A-U14A	WHSE / BFD	1	CMP22	W	110.80	0.00	110.80	97.00	13.80	Y
27/5A/X13	WHSE / BFD	1	CMP22	W	110.80	0.00	110.80	97.00	13.80	Y

Path Voltage Drop Summary

Generation Date: 08/23/2005 06:30 pm

Battery: 22 **Node:** 17 **Circuit:** DP22-18 **Schematic:** 9321-LL-3117 SH 22

Device ID	Mfgr/Model	Path	Scenario	Time	Node Voltage	Path VD	Device Voltage	Required Voltage	Voltage Delta	Y/N
27-61-ICS	WHSE / CV	1	CMP22	W	110.80	0.00	110.80	101.00	9.80	Y
27-61/X1	WHSE / TYPE SG, 12V COIL, W	1	CMP22	W	110.80	0.00	110.80	101.00	9.80	Y
27-61/X2	WHSE / BFD	1	CMP22	W	110.80	0.00	110.80	97.00	13.80	Y
27-61/X3	WHSE / BFD	1	CMP22	W	110.80	0.00	110.80	97.00	13.80	Y
27-62-ICS	WHSE / CV	1	CMP22	W	110.80	0.00	110.80	101.00	9.80	Y
27-62/X1	WHSE / TYPE SG, 12V COIL, W	1	CMP22	W	110.80	0.00	110.80	101.00	9.80	Y
27-62/X2	WHSE / BFD	1	CMP22	W	110.80	0.00	110.80	97.00	13.80	Y
27-62/X3	WHSE / BFD	1	CMP22	W	110.80	0.00	110.80	97.00	13.80	Y
27-63-ICS	WHSE / CV	1	CMP22	W	110.80	0.00	110.80	101.00	9.80	Y
27-63/X1	WHSE / TYPE SG, 12V COIL, W	1	CMP22	W	110.80	0.00	110.80	101.00	9.80	Y
27-63/X2	WHSE / BFD	1	CMP22	W	110.80	0.00	110.80	97.00	13.80	Y
27-63/X3	WHSE / BFD	1	CMP22	W	110.80	0.00	110.80	97.00	13.80	Y

Path Voltage Drop Summary

Generation Date: 08/23/2005 06:30 pm

Battery: 22 **Node:** 17 **Circuit:** DP22-18 **Schematic:** 9321-LL-3118 SH 02

Device ID	Mfgr/Model	Path	Scenario	Time	Node Voltage	Path VD	Device Voltage	Required Voltage	Voltage Delta	Y/N
2/11/11X-SG22B6A/3A	WHSE / BFD	1	CMP22	W	110.80	0.00	110.80	97.00	13.80	Y
2/12-SG22B6A/3A	AGASTAT / AGA 2414	1	CMP22	W	110.80	0.00	110.80	97.00	13.80	Y
2/13-SG22B6A/3A	AGASTAT / AGA 2412	1	CMP22	W	110.80	0.00	110.80	97.00	13.80	Y
27/1/3A-ICS-SG22B3A-U1A	WHSE / CV	1	CMP22	W	110.80	0.00	110.80	101.00	9.80	Y
27/1/6A-ICS-SG22B6A-U13A	WHSE / CV	1	CMP22	W	110.80	0.00	110.80	101.00	9.80	Y
27/3A/X1-SG22B3A-U1A	WHSE / TYPE SG, 12V COIL, W	1	CMP22	W	110.80	0.00	110.80	101.00	9.80	Y
27/3A/X2-SG22B3A-U1A	WHSE / BFD	1	CMP22	W	110.80	0.00	110.80	97.00	13.80	Y
27/3A/X3-SG22B3A-U1A	WHSE / BFD	1	CMP22	W	110.80	0.00	110.80	97.00	13.80	Y
27/3A/X4-SG22B3A-U1A	WHSE / BFD	1	CMP22	W	110.80	0.00	110.80	97.00	13.80	Y
27/6A/X1-SG22B6A-U13A	WHSE / TYPE SG, 12V COIL, W	1	CMP22	W	110.80	0.00	110.80	101.00	9.80	Y
27/6A/X2-SG22B6A-U13A	WHSE / BFD	1	CMP22	W	110.80	0.00	110.80	97.00	13.80	Y
27/6A/X3-SG22B6A-U13A	WHSE / BFD	1	CMP22	W	110.80	0.00	110.80	97.00	13.80	Y
27/6A/X4-SG22B6A-U13A	WHSE / BFD	1	CMP22	W	110.80	0.00	110.80	97.00	13.80	Y
3/11-SG22B6A/3A	WHSE / BFD	1	CMP22	W	110.80	0.00	110.80	97.00	13.80	Y
3/12-SG22B6A/3A	WHSE / BFD	1	CMP22	W	110.80	0.00	110.80	97.00	13.80	Y
3/13-SG22B6A/3A	WHSE / BFD	1	CMP22	W	110.80	0.00	110.80	97.00	13.80	Y
3/13A-SG22B6A/3A	WHSE / BFD	1	CMP22	W	110.80	0.00	110.80	97.00	13.80	Y
3/14-SG22B6A/3A	WHSE / BFD	1	CMP22	W	110.80	0.00	110.80	97.00	13.80	Y
3/14A-SG22B6A/3A	WHSE / BFD	1	CMP22	W	110.80	0.00	110.80	97.00	13.80	Y
3/15-SG22B6A/3A	WHSE / BFD	1	CMP22	W	110.80	0.00	110.80	97.00	13.80	Y
5/12-SG22B6A/3A	WHSE / BFD	1	CMP22	W	110.80	0.00	110.80	97.00	13.80	Y
5/13-SG22B6A/3A	WHSE / BFD	1	CMP22	W	110.80	0.00	110.80	97.00	13.80	Y
86/3A/O-SG22B3A-U1A	UNKNOWN / UNKNOWN	1	CMP22	W	110.80	0.00	110.80	101.00	9.80	Y
86/3A/R-SG22B3A-U1A	UNKNOWN / UNKNOWN	1	CMP22	W	110.80	0.00	110.80	101.00	9.80	Y
86/6A/O-SG22B6A-U13A	UNKNOWN / UNKNOWN	1	CMP22	W	110.80	0.00	110.80	101.00	9.80	Y
86/6A/R-SG22B6A-U13A	UNKNOWN / UNKNOWN	1	CMP22	W	110.80	0.00	110.80	101.00	9.80	Y

Path Voltage Drop Summary

Generation Date: 08/23/2005 06:30 pm

Battery: 22 **Node:** 17 **Circuit:** DP22-18 **Schematic:** 9321-LL-3118 SH 20

Device ID	Mfgr/Model	Path	Scenario	Time	Node Voltage	Path VD	Device Voltage	Required Voltage	Voltage Delta	Y/N
1X/BFPT2-ABFP 21/23	WHSE / BFD	1	CMP22	W	110.80	0.00	110.80	97.00	13.80	Y
71/1X-ABFP 21/23	WHSE / BFD	1	CMP22	W	110.80	0.00	110.80	97.00	13.80	Y
71/2X-ABFP 21/23	WHSE / BFD	1	CMP22	W	110.80	0.00	110.80	97.00	13.80	Y
71/3X-ABFP 21/23	WHSE / BFD	1	CMP22	W	110.80	0.00	110.80	97.00	13.80	Y
71/4X-ABFP 21/23	WHSE / BFD	1	CMP22	W	110.80	0.00	110.80	97.00	13.80	Y
BFP2-ABFP 21/23	WHSE / BFD	1	CMP22	W	110.80	0.00	110.80	97.00	13.80	Y
BFPB-ABFP 21/23	WHSE / BFD	1	CMP22	W	110.80	0.00	110.80	97.00	13.80	Y
BFPB/2-ABFP 21/23	WHSE / BFD	1	CMP22	W	110.80	0.00	110.80	97.00	13.80	Y

Path Voltage Drop Summary

Generation Date: 08/23/2005 06:30 pm

Battery: 22 **Node:** 17 **Circuit:** DP22-18 **Schematic:** 9321-LL-3118 SH 20A

Device ID	Mfgr/Model	Path	Scenario	Time	Node Voltage	Path VD	Device Voltage	Required Voltage	Voltage Delta	Y/N
R1-ABFP 21/23	WHSE / BFD	1	CMP22	W	110.80	0.00	110.80	97.00	13.80	Y

Path Voltage Drop Summary

Generation Date: 08/23/2005 06:30 pm

Battery: 22 **Node:** 17 **Circuit:** DP22-18 **Schematic:** 9321-LL-3131 SH 21

Device ID	Mfgr/Model	Path	Scenario	Time	Node Voltage	Path VD	Device Voltage	Required Voltage	Voltage Delta	Y/N
20/21-2	ASCO / CAT. NO. WJNP831666V	1	CMP22	W	110.80	0.00	110.80	91.00	19.80	Y
20/21-4	ASCO / CAT. NO. WJNP8316E34	1	CMP22	W	110.80	0.00	110.80	91.00	19.80	Y
20/22-2	ASCO / CAT. NO. WJNP831666V	1	CMP22	W	110.80	0.00	110.80	91.00	19.80	Y
20/22-4	ASCO / CAT. NO. WJNP8316E34	1	CMP22	W	110.80	0.00	110.80	91.00	19.80	Y
20/23-2	ASCO / CAT. NO. WJNP831666V	1	CMP22	W	110.80	0.00	110.80	91.00	19.80	Y
20/23-4	ASCO / CAT. NO. WJNP8316E34	1	CMP22	W	110.80	0.00	110.80	91.00	19.80	Y
20/24-2	ASCO / CAT. NO. WJNP831666V	1	CMP22	W	110.80	0.00	110.80	91.00	19.80	Y
20/24-4	ASCO / CAT. NO. WJNP8316E34	1	CMP22	W	110.80	0.00	110.80	91.00	19.80	Y
74X8	UNKNOWN / UNKNOWN	1	CMP22	W	110.80	0.00	110.80	101.00	9.80	Y

Path Voltage Drop Summary

Generation Date: 08/23/2005 06:30 pm

Battery: 22 **Node:** 17 **Circuit:** DP22-18 **Schematic:** A241685

Device ID	Mfgr/Model	Path	Scenario	Time	Node Voltage	Path VD	Device Voltage	Required Voltage	Voltage Delta	Y/N
2/TD2/SL2-MS ISOL B	AGASTAT / 7000 SERIES	1	CMP22	W	110.80	0.00	110.80	101.00	9.80	Y
74X2	WHSE / BFD	1	CMP22	W	110.80	0.00	110.80	97.00	13.80	Y
74X4	WHSE / BFD	1	CMP22	W	110.80	0.00	110.80	97.00	13.80	Y
74X6	WHSE / BFD	1	CMP22	W	110.80	0.00	110.80	97.00	13.80	Y
MS11-MS ISOL B	WHSE / BFD	1	CMP22	W	110.80	0.00	110.80	97.00	13.80	Y
MS12-MS ISOL B	WHSE / BFD	1	CMP22	W	110.80	0.00	110.80	97.00	13.80	Y
MS13-MS ISOL B	WHSE / BFD	1	CMP22	W	110.80	0.00	110.80	97.00	13.80	Y
MS14-MS ISOL B	WHSE / BFD	1	CMP22	W	110.80	0.00	110.80	97.00	13.80	Y
SL2	WHSE / BFD	1	CMP22	W	110.80	0.00	110.80	97.00	13.80	Y
TR2-MS ISOL B	WHSE / BFD	1	CMP22	W	110.80	0.00	110.80	97.00	13.80	Y
TR2-X-MS ISOL B	WHSE / BFD	1	CMP22	W	110.80	0.00	110.80	97.00	13.80	Y

Path Voltage Drop Summary

Generation Date: 08/23/2005 06:30 pm

Battery: 22 **Node:** 17 **Circuit:** DP22-19 **Schematic:** 9321-LL-3130 SH 02B

Device ID	Mfgr/Model	Path	Scenario	Time	Node Voltage	Path VD	Device Voltage	Required Voltage	Voltage Delta	Y/N
20/ASB-T/G A-S TRIP	UNKNOWN / UNKNOWN	1	CMP22	W	110.80	0.00	110.80	103.00	7.80	Y
63X1/AST3-T/G A-S TRIP	WHSE / MG-6	1	CMP22	W	110.80	0.00	110.80	101.00	9.80	Y
63X2/AST3-T/G A-S TRIP	WHSE / MG-6	1	CMP22	W	110.80	0.00	110.80	101.00	9.80	Y
F15X/1-T/G A-S TRIP	WHSE / BFD	1	CMP22	W	110.80	0.00	110.80	97.00	13.80	Y

Path Voltage Drop Summary

Generation Date: 08/23/2005 06:30 pm

Battery: 22 **Node:** 17 **Circuit:** DP22-19 **Schematic:** A207325

Device ID	Mfgr/Model	Path	Scenario	Time	Node Voltage	Path VD	Device Voltage	Required Voltage	Voltage Delta	Y/N
20/DV1B	ASCO / CAT. NO. FT8316E36	1	CMP22	W	110.80	0.00	110.80	103.00	7.80	Y
20/DV2B	ASCO / CAT. NO. FT8316E36	1	CMP22	W	110.80	0.00	110.80	103.00	7.80	Y
20/DV3B	ASCO / CAT. NO. FT8316E36	1	CMP22	W	110.80	0.00	110.80	103.00	7.80	Y
20/DV4B	ASCO / CAT. NO. FT8316E36	1	CMP22	W	110.80	0.00	110.80	103.00	7.80	Y
20/DV5B	ASCO / CAT. NO. FT8316E36	1	CMP22	W	110.80	0.00	110.80	103.00	7.80	Y
20/DV6B	ASCO / CAT. NO. FT8316E36	1	CMP22	W	110.80	0.00	110.80	103.00	7.80	Y
AST/X-LP STM DMPII	WHSE / BFD	1	CMP22	W	110.80	0.00	110.80	97.00	13.80	Y

Path Voltage Drop Summary

Generation Date: 08/23/2005 06:30 pm

Battery: 22 **Node:** 17 **Circuit:** DP22-20 **Schematic:** 307670

Device ID	Mfgr/Model	Path	Scenario	Time	Node Voltage	Path VD	Device Voltage	Required Voltage	Voltage Delta	Y/N
74/22-TB OS TRIP B	UNKNOWN / UNKNOWN	1	CMP22	W	110.80	0.00	110.80	101.00	9.80	Y

Path Voltage Drop Summary

Generation Date: 08/23/2005 06:30 pm

Battery: 22 **Node:** 17 **Circuit:** DP22-20 **Schematic:** A236330

Device ID	Mfgr/Model	Path	Scenario	Time	Node Voltage	Path VD	Device Voltage	Required Voltage	Voltage Delta	Y/N
20/GLLB	UNKNOWN / UNKNOWN	1	CMP22	W	110.80	0.00	110.80	103.00	7.80	Y
20/GLRB	UNKNOWN / UNKNOWN	1	CMP22	W	110.80	0.00	110.80	103.00	7.80	Y
20/GULB	UNKNOWN / UNKNOWN	1	CMP22	W	110.80	0.00	110.80	103.00	7.80	Y
20/GURB	UNKNOWN / UNKNOWN	1	CMP22	W	110.80	0.00	110.80	103.00	7.80	Y
20/SLLB	UNKNOWN / UNKNOWN	1	CMP22	W	110.80	0.00	110.80	103.00	7.80	Y
20/SLRB	UNKNOWN / UNKNOWN	1	CMP22	W	110.80	0.00	110.80	103.00	7.80	Y
20/SULB	UNKNOWN / UNKNOWN	1	CMP22	W	110.80	0.00	110.80	103.00	7.80	Y
20/SURB	UNKNOWN / UNKNOWN	1	CMP22	W	110.80	0.00	110.80	103.00	7.80	Y
20X/GLLB	UNKNOWN / UNKNOWN	1	CMP22	W	110.80	0.00	110.80	101.00	9.80	Y
20X/GLRB	UNKNOWN / UNKNOWN	1	CMP22	W	110.80	0.00	110.80	101.00	9.80	Y
20X/GULB	UNKNOWN / UNKNOWN	1	CMP22	W	110.80	0.00	110.80	101.00	9.80	Y
20X/GURB	UNKNOWN / UNKNOWN	1	CMP22	W	110.80	0.00	110.80	101.00	9.80	Y
20X/SLLB	UNKNOWN / UNKNOWN	1	CMP22	W	110.80	0.00	110.80	101.00	9.80	Y
20X/SLRB	UNKNOWN / UNKNOWN	1	CMP22	W	110.80	0.00	110.80	101.00	9.80	Y
20X/SULB	UNKNOWN / UNKNOWN	1	CMP22	W	110.80	0.00	110.80	101.00	9.80	Y
20X/SURB	UNKNOWN / UNKNOWN	1	CMP22	W	110.80	0.00	110.80	101.00	9.80	Y
LTB1-TB OS TRIP B	UNKNOWN / UNKNOWN	1	CMP22	W	110.80	0.00	110.80	101.00	9.80	Y
LTB2-TB OS TRIP B	UNKNOWN / UNKNOWN	1	CMP22	W	110.80	0.00	110.80	101.00	9.80	Y
R/ROP2	UNKNOWN / UNKNOWN	1	CMP22	W	110.80	0.00	110.80	101.00	9.80	Y
VB1-TB OS TRIP B	UNKNOWN / UNKNOWN W/ DIODE IN	1	CMP22	W	110.80	0.00	110.80	101.00	9.80	Y
VB2-TB OS TRIP B	UNKNOWN / UNKNOWN W/ DIODE IN	1	CMP22	W	110.80	0.00	110.80	101.00	9.80	Y
VB3-TB OS TRIP B	UNKNOWN / UNKNOWN W/ DIODE IN	1	CMP22	W	110.80	0.00	110.80	101.00	9.80	Y
VB4-TB OS TRIP B	WHSE / TYPE ARD4S	1	CMP22	W	110.80	0.00	110.80	97.00	13.80	Y
VTB1-TB OS TRIP B	UNKNOWN / UNKNOWN	1	CMP22	W	110.80	0.00	110.80	101.00	9.80	Y
VTB2-TB OS TRIP B	UNKNOWN / UNKNOWN	1	CMP22	W	110.80	0.00	110.80	101.00	9.80	Y
VTB3-TB OS TRIP B	SIEMENS / CODE 82E TYPE 3TH4	1	CMP22	W	110.80	0.00	110.80	101.00	9.80	Y

Path Voltage Drop Summary

Generation Date: 08/23/2005 06:30 pm

Battery: 22 **Node:** 18 **Circuit:** DP22-06 **Schematic:** 9321-LL-3131 SH 25

Device ID	Mfgr/Model	Path	Scenario	Time	Node Voltage	Path VD	Device Voltage	Required Voltage	Voltage Delta	Y/N
20/1-CRMIV-B	ASCO / CAT. NO. 206-381-2RV	1	CMP22	W	108.99	0.00	108.99	91.00	17.99	Y
20/2-CRMIV-B	ASCO / CAT. NO. 206-381-2RV	1	CMP22	W	108.99	0.00	108.99	91.00	17.99	Y
20/3-CRMIV-B	ASCO / CAT. NO. 206-381-2RV	1	CMP22	W	108.99	0.00	108.99	91.00	17.99	Y
20/4-CRMIV-B	ASCO / CAT. NO. 206-381-2RV	1	CMP22	W	108.99	0.00	108.99	91.00	17.99	Y
RM/BRR-CRMIV-B	UNKNOWN / UNKNOWN	1	CMP22	W	108.99	0.00	108.99	101.00	7.99	Y

Path Voltage Drop Summary

Generation Date: 08/23/2005 06:30 pm

Battery: 22 **Node:** 18 **Circuit:** DP22-06 **Schematic:** 9321-LL-3601 SH 03

Device ID	Mfgr/Model	Path	Scenario	Time	Node Voltage	Path VD	Device Voltage	Required Voltage	Voltage Delta	Y/N
SOV417L-C	ASCO / CAT. NO. 206-381-6RG	1	CMP22	W	108.99	0.00	108.99	91.00	17.99	Y
SOV417L-D	ASCO / CAT. NO. 206-381-6RF	1	CMP22	W	108.99	0.00	108.99	91.00	17.99	Y
SOV427L-C	ASCO / CAT. NO. 206-381-6RG	1	CMP22	W	108.99	0.00	108.99	91.00	17.99	Y
SOV427L-D	ASCO / CAT. NO. 206-381-6RF	1	CMP22	W	108.99	0.00	108.99	91.00	17.99	Y
SOV437L-C	ASCO / CAT. NO. 206-381-6RG	1	CMP22	W	108.99	0.00	108.99	91.00	17.99	Y
SOV437L-D	ASCO / CAT. NO. 206-381-6RF	1	CMP22	W	108.99	0.00	108.99	91.00	17.99	Y
SOV447L-C	ASCO / CAT. NO. 206-381-6RG	1	CMP22	W	108.99	0.00	108.99	91.00	17.99	Y
SOV447L-D	ASCO / CAT. NO. 206-381-6RF	1	CMP22	W	108.99	0.00	108.99	91.00	17.99	Y

Path Voltage Drop Summary

Generation Date: 08/23/2005 06:30 pm

Battery: 22 **Node:** 18 **Circuit:** DP22-06 **Schematic:** A208425

Device ID	Mfgr/Model	Path	Scenario	Time	Node Voltage	Path VD	Device Voltage	Required Voltage	Voltage Delta	Y/N
796BRR-V796	WHSE / BFD	1	CMP22	W	108.99	0.00	108.99	97.00	11.99	Y
SOV796	ASCO / CAT. NO. NPK831654V	1	CMP22	W	108.99	0.00	108.99	91.00	17.99	Y

Path Voltage Drop Summary

Generation Date: 08/23/2005 06:30 pm

Battery: 22 **Node:** 18 **Circuit:** DP22-06 **Schematic:** A209515

Device ID	Mfgr/Model	Path	Scenario	Time	Node Voltage	Path VD	Device Voltage	Required Voltage	Voltage Delta	Y/N
20/5-SGI2	ASCO / CAT. NO. NPK8316A54V	1	CMP22	W	108.99	0.00	108.99	91.00	17.99	Y
20/6-SGI2	ASCO / CAT. NO. NPK8316A54V	1	CMP22	W	108.99	0.00	108.99	91.00	17.99	Y
20/7-SGI2	ASCO / CAT. NO. NPK8316A54V	1	CMP22	W	108.99	0.00	108.99	91.00	17.99	Y
20/8-SGI2	ASCO / CAT. NO. NPK8316A54V	1	CMP22	W	108.99	0.00	108.99	91.00	17.99	Y
SG2X-SGI2	UNKNOWN / UNKNOWN	1	CMP22	W	108.99	0.00	108.99	101.00	7.99	Y

Path Voltage Drop Summary

Generation Date: 08/23/2005 06:30 pm

Battery: 22 **Node:** 18 **Circuit:** DP22-06 **Schematic:** B209524

Device ID	Mfgr/Model	Path	Scenario	Time	Node Voltage	Path VD	Device Voltage	Required Voltage	Voltage Delta	Y/N
956BRR-V956B	WHSE / BFD	1	CMP22	W	108.99	0.00	108.99	97.00	11.99	Y
SOV956B	ASCO / CAT. NO. NP8314C28V	1	CMP22	W	108.99	0.00	108.99	91.00	17.99	Y

Path Voltage Drop Summary

Generation Date: 08/23/2005 06:30 pm

Battery: 22 **Node:** 18 **Circuit:** DP22-06 **Schematic:** B209525

Device ID	Mfgr/Model	Path	Scenario	Time	Node Voltage	Path VD	Device Voltage	Required Voltage	Voltage Delta	Y/N
SOV956D	ASCO / CAT. NO. NP8314C28V	1	CMP22	W	108.99	0.00	108.99	91.00	17.99	Y

Path Voltage Drop Summary

Generation Date: 08/23/2005 06:30 pm

Battery: 22 **Node:** 18 **Circuit:** DP22-06 **Schematic:** B209526

Device ID	Mfgr/Model	Path	Scenario	Time	Node Voltage	Path VD	Device Voltage	Required Voltage	Voltage Delta	Y/N
956HBRR-V956H	WHSE / BFD	1	CMP22	W	108.99	0.00	108.99	97.00	11.99	Y
SOV956H	ASCO / CAT. NO.206-381-4RVU	1	CMP22	W	108.99	0.00	108.99	91.00	17.99	Y

Path Voltage Drop Summary

Generation Date: 08/23/2005 06:30 pm

Battery: 22 **Node:** 18 **Circuit:** DP22-06 **Schematic:** B225206

Device ID	Mfgr/Model	Path	Scenario	Time	Node Voltage	Path VD	Device Voltage	Required Voltage	Voltage Delta	Y/N
1705BRR-V1705	WHSE / BFD	1	CMP22	W	108.99	0.00	108.99	97.00	11.99	Y
1728BRR-V1728	WHSE / BFD	1	CMP22	W	108.99	0.00	108.99	97.00	11.99	Y
1787BRR-V1787	WHSE / BFD	1	CMP22	W	108.99	0.00	108.99	97.00	11.99	Y
202BRR-V202	WHSE / BFD	1	CMP22	W	108.99	0.00	108.99	97.00	11.99	Y
552BRR-V552	UNKNOWN / UNKNOWN	1	CMP22	W	108.99	0.00	108.99	101.00	7.99	Y
798BRR-V798	WHSE / BFD	1	CMP22	W	108.99	0.00	108.99	97.00	11.99	Y
SOV1705	ASCO / CAT. NO. NP831655V	1	CMP22	W	108.99	0.00	108.99	91.00	17.99	Y
SOV1728	ASCO / CAT. NO. NPK831654V	1	CMP22	W	108.99	0.00	108.99	91.00	17.99	Y
SOV1787	ASCO / CAT. NO. NP8320A183V	1	CMP22	W	108.99	0.00	108.99	91.00	17.99	Y
SOV202	ASCO / CAT. NO. NP8320A185V	1	CMP22	W	108.99	0.00	108.99	91.00	17.99	Y
SOV552	ASCO / CAT. NO. 206-381-6RF	1	CMP22	W	108.99	0.00	108.99	91.00	17.99	Y
SOV798	ASCO / CAT. NO.206-381-4RVU	1	CMP22	W	108.99	0.00	108.99	91.00	17.99	Y

Path Voltage Drop Summary

Generation Date: 08/23/2005 06:30 pm

Battery: 22 **Node:** 18 **Circuit:** DP22-06 **Schematic:** B226967

Device ID	Mfgr/Model	Path	Scenario	Time	Node Voltage	Path VD	Device Voltage	Required Voltage	Voltage Delta	Y/N
IVSW3518	VALCOR / V526 Series	1	CMP22	W	108.99	0.00	108.99	91.00	17.99	Y

Path Voltage Drop Summary

Generation Date: 08/23/2005 06:30 pm

Battery: 22 **Node:** 18 **Circuit:** DP22-06 **Schematic:** IP2-S-000006

Device ID	Mfgr/Model	Path	Scenario	Time	Node Voltage	Path VD	Device Voltage	Required Voltage	Voltage Delta	Y/N
SOV1413-V1413	UNKNOWN / UNKNOWN	1	CMP22	W	108.99	0.00	108.99	103.00	5.99	Y

Path Voltage Drop Summary

Generation Date: 08/23/2005 06:30 pm

Battery: 22 **Node:** 19 **Circuit:** DG22-CONTR **Schematic:** A208540

Device ID	Mfgr/Model	Path	Scenario	Time	Node Voltage	Path VD	Device Voltage	Required Voltage	Voltage Delta	Y/N
86-EDG 22	WHSE / MG-6	1	CMP22	W	110.68	0.00	110.68	101.00	9.68	Y
86X-EDG 22	UNKNOWN / UNKNOWN	1	CMP22	W	110.68	0.00	110.68	101.00	9.68	Y
CVX-EDG 22	WHSE / MG-6	1	CMP22	W	110.68	0.00	110.68	101.00	9.68	Y
VBR-EDG 22	WHSE / CV	1	CMP22	W	110.68	0.00	110.68	101.00	9.68	Y

Path Voltage Drop Summary

Generation Date: 08/23/2005 06:30 pm

Battery: 22 **Node:** 19 **Circuit:** DG22-CONTR **Schematic:** IP2-S-000285

Device ID	Mfgr/Model	Path	Scenario	Time	Node Voltage	Path VD	Device Voltage	Required Voltage	Voltage Delta	Y/N
32X-EDG 22	UNKNOWN / UNKNOWN	1	CMP22	W	110.68	0.00	110.68	101.00	9.68	Y
51VX-EDG 22	UNKNOWN / UNKNOWN	1	CMP22	W	110.68	0.00	110.68	101.00	9.68	Y
AGA/1-EDG 22	AGASTAT / UNKNOWN	1	CMP22	W	110.68	0.00	110.68	101.00	9.68	Y
AGA/2-EDG 22	AGASTAT / UNKNOWN	1	CMP22	W	110.68	0.00	110.68	101.00	9.68	Y
ANNUNHORN-EDG 22	PANALARM / HORN FOR ANNUNCIATOR	1	CMP22	W	110.68	0.00	110.68	101.00	9.68	Y
ASR-EDG 22	UNKNOWN / UNKNOWN	1	CMP22	W	110.68	0.00	110.68	101.00	9.68	Y
ASV/1-EDG 22	ROSS / SERIES 27	1	CMP22	W	110.68	0.03	110.64	75.00	35.64	Y
ASV/2-EDG 22	ROSS / SERIES 27	1	CMP22	W	110.68	0.04	110.64	75.00	35.64	Y
CR/1-EDG 22	UNKNOWN / UNKNOWN W/ DIODE IN	1	CMP22	W	110.68	0.00	110.68	101.00	9.68	Y
CR/2-EDG 22	UNKNOWN / UNKNOWN W/ DIODE IN	1	CMP22	W	110.68	0.00	110.68	101.00	9.68	Y
EDD6	ASCO / AUTO TRANSFER P/N 30	1	CMP22	W	110.68	0.00	110.68	101.00	9.68	Y
ESR/1-EDG 22	UNKNOWN / UNKNOWN W/ DIODE IN	1	CMP22	W	110.68	0.00	110.68	101.00	9.68	Y
ESR/2-EDG 22	UNKNOWN / UNKNOWN W/ DIODE IN	1	CMP22	W	110.68	0.00	110.68	101.00	9.68	Y
ESRX/1-EDG 22	WHSE / NBFD	1	CMP22	W	110.68	0.11	110.57	101.00	9.57	Y
ESRX/1-EDG 22	WHSE / NBFD	2	CMP22	W	110.68	0.09	110.59	101.00	9.59	Y
ESRX/2-EDG 22	WHSE / NBFD	1	CMP22	W	110.68	0.11	110.57	101.00	9.57	Y
ESRX/2-EDG 22	WHSE / NBFD	2	CMP22	W	110.68	0.09	110.58	101.00	9.58	Y
ESS-EDG 22	UNKNOWN / 1 PUSHBUTTON LT	1	CMP22	W	110.68	0.00	110.68	101.00	9.68	Y
FLD FLASH-EDG 22	ALCO / FIELD FLASH	1	CMP22	W	110.68	0.00	110.68	1.00	109.68	Y
FODPR-EDG 22	UNKNOWN / UNKNOWN W/ DIODE IN	1	CMP22	W	110.68	0.00	110.68	101.00	9.68	Y
FODSR-EDG 22	UNKNOWN / UNKNOWN W/ DIODE IN	1	CMP22	W	110.68	0.00	110.68	101.00	9.68	Y
FR-EDG 22	UNKNOWN / UNKNOWN	1	CMP22	W	110.68	0.00	110.68	101.00	9.68	Y
H/HWTR-EDG 22	UNKNOWN / UNKNOWN W/ DIODE IN	1	CMP22	W	110.68	0.00	110.68	101.00	9.68	Y
HL/LOTR-EDG 22	UNKNOWN / UNKNOWN W/ DIODE IN	1	CMP22	W	110.68	0.00	110.68	101.00	9.68	Y
HLOTR/1-EDG 22	UNKNOWN / UNKNOWN W/ DIODE IN	1	CMP22	W	110.68	0.00	110.68	101.00	9.68	Y
HR-EDG 22	UNKNOWN / UNKNOWN	1	CMP22	W	110.68	0.00	110.68	101.00	9.68	Y
HWTR-EDG 22	UNKNOWN / UNKNOWN W/ DIODE IN	1	CMP22	W	110.68	0.00	110.68	101.00	9.68	Y
HWTR/1-EDG 22	UNKNOWN / UNKNOWN W/ DIODE IN	1	CMP22	W	110.68	0.00	110.68	101.00	9.68	Y
K1X-EDG 22	UNKNOWN / UNKNOWN W/ DIODE IN	1	CMP22	W	110.68	0.00	110.68	101.00	9.68	Y
LAPR-EDG 22	UNKNOWN / UNKNOWN W/ DIODE IN	1	CMP22	W	110.68	0.00	110.68	101.00	9.68	Y
LFLR-EDG 22	UNKNOWN / UNKNOWN W/ DIODE IN	1	CMP22	W	110.68	0.00	110.68	101.00	9.68	Y
LODFR-EDG 22	UNKNOWN / UNKNOWN W/ DIODE IN	1	CMP22	W	110.68	0.00	110.68	101.00	9.68	Y
LODSR-EDG 22	UNKNOWN / UNKNOWN W/ DIODE IN	1	CMP22	W	110.68	0.00	110.68	101.00	9.68	Y
NST-EDG 22	UNKNOWN / UNKNOWN TIME DELAY	1	CMP22	W	110.68	0.00	110.68	101.00	9.68	Y
OCR-EDG 22	UNKNOWN / UNKNOWN	1	CMP22	W	110.68	0.00	110.68	101.00	9.68	Y
OCT/1-EDG 22	UNKNOWN / UNKNOWN TIME DELAY	1	CMP22	W	110.68	0.00	110.68	101.00	9.68	Y
OCT/2-EDG 22	UNKNOWN / UNKNOWN TIME DELAY	1	CMP22	W	110.68	0.00	110.68	101.00	9.68	Y
OPR-EDG 22	UNKNOWN / UNKNOWN W/ DIODE IN	1	CMP22	W	110.68	0.00	110.68	101.00	9.68	Y
OPT1-EDG 22	AMERACE / CAT. NO. 7012PD	1	CMP22	W	110.68	0.00	110.68	101.00	9.68	Y
OPT2-EDG 22	AMERACE / CAT. NO. 7012PD	1	CMP22	W	110.68	0.00	110.68	101.00	9.68	Y
OSR-EDG 22	UNKNOWN / UNKNOWN W/ DIODE IN	1	CMP22	W	110.68	0.00	110.68	101.00	9.68	Y
PDT-EDG 22	UNKNOWN / UNKNOWN TIME DELAY	1	CMP22	W	110.68	0.00	110.68	101.00	9.68	Y
R1-EDG 22	WHSE / BFD	1	CMP22	W	110.68	0.00	110.68	97.00	13.68	Y
R2-EDG 22	WHSE / BFD	1	CMP22	W	110.68	0.00	110.68	97.00	13.68	Y
RR-EDG 22	UNKNOWN / UNKNOWN W/ DIODE IN	1	CMP22	W	110.68	0.00	110.68	101.00	9.68	Y

Path Voltage Drop Summary

Generation Date: 08/23/2005 06:30 pm

Battery: 22 **Node:** 19 **Circuit:** DG22-CONTR **Schematic:** IP2-S-000285

Device ID	Mfgr/Model	Path	Scenario	Time	Node Voltage	Path VD	Device Voltage	Required Voltage	Voltage Delta	Y/N
SDR-EDG 22	AMERACE / CAT. NO.	1	CMP22	W	110.68	0.00	110.68	101.00	9.68	Y
UPR-EDG 22	UNKNOWN / UNKNOWN	1	CMP22	W	110.68	0.00	110.68	101.00	9.68	Y

Path Voltage Drop Summary

Generation Date: 08/23/2005 06:30 pm

Battery: 22 **Node:** 19 **Circuit:** DG22-CONTR **Schematic:** IP2-S-000365

Device ID	Mfgr/Model	Path	Scenario	Time	Node Voltage	Path VD	Device Voltage	Required Voltage	Voltage Delta	Y/N
JWPS(3,4)X-EDG 22	WHSE / NBFD	1	CMP22	W	110.68	0.00	110.68	101.00	9.68	Y
K1-EDG 22	WHSE / TYPE MLLO-2H	1	CMP22	W	110.68	0.00	110.68	101.00	9.68	Y
K1T-EDG 22	UNKNOWN / UNKNOWN	1	CMP22	W	110.68	0.00	110.68	101.00	9.68	Y
K2-EDG 22	WHSE / TYPE MLLO-2H	1	CMP22	W	110.68	0.00	110.68	101.00	9.68	Y
K4-EDG 22	UNKNOWN / UNKNOWN W/ DIODE IN	1	CMP22	W	110.68	0.00	110.68	101.00	9.68	Y

Path Voltage Drop Summary

Generation Date: 08/23/2005 06:30 pm

Battery: 22 **Node:** 20 **Circuit:** PP22-14 **Schematic:** 011D13784

Device ID	Mfgr/Model	Path	Scenario	Time	Node Voltage	Path VD	Device Voltage	Required Voltage	Voltage Delta	Y/N
INVERTER PA	SCI / 10 KVA INV, SV12100/	1	CMP22	W	110.21	0.00	110.21	105.00	5.21	Y

Path Voltage Drop Summary

Generation Date: 08/23/2005 06:30 pm

Battery: 22 **Node:** 21 **Circuit:** PP22-15 **Schematic:** 1975M1487

Device ID	Mfgr/Model	Path	Scenario	Time	Node Voltage	Path VD	Device Voltage	Required Voltage	Voltage Delta	Y/N
INVERTER 22	SCI / INV 22	1	CMP22	W	112.21	0.00	112.21	105.00	7.21	Y

N/A

N/A

N/A

Attachment F
Node Voltages

Attachment revised
to account for
Transfer Switch loading

By: H Robinson Date: _____
Check: _____ Date: _____

Node Voltages

Generation Date: 03/06/2008 10:50 am

Battery: 22

Scenario: CMP22

Scenario Description: Battery 22 Composite Scenario

Continued on Page 4

			Time Step: 1	2	3	4	5	6	7	8	9	10	11	12	13	14
			Time Step Range: 0:00:00.0 to 0:00:01.0	0:00:01.0 to 0:00:01.1	0:00:01.1 to 0:00:02.0	0:00:02.0 to 0:00:03.0	0:00:03.0 to 0:00:03.1	0:00:03.1 to 0:00:04.0	0:00:04.0 to 0:00:05.0	0:00:05.0 to 0:00:10.0	0:00:10.0 to 0:00:10.1	0:00:10.1 to 0:00:11.0	0:00:11.0 to 0:00:13.0	0:00:13.0 to 0:00:13.1	0:00:13.1 to 0:00:14.0	0:00:14.0 to 0:00:25.0
Node	Name	Description	Node Voltage (VDC)	Node Voltage (VDC)	Node Voltage (VDC)	Node Voltage (VDC)	Node Voltage (VDC)	Node Voltage (VDC)	Node Voltage (VDC)	Node Voltage (VDC)	Node Voltage (VDC)	Node Voltage (VDC)	Node Voltage (VDC)	Node Voltage (VDC)	Node Voltage (VDC)	Node Voltage (VDC)
1	B-22	BATTERY 22	114.567	114.567	114.567	114.567	114.567	114.567	114.567	114.567	114.567	114.567	114.567	114.567	114.567	114.567
2	PP-22	POWER PANEL 22 (PC2)	114.130	114.176	114.033	114.152	114.152	114.127	114.152	114.167	114.209	114.131	114.209	114.207	114.157	114.209
3	BC-22	BATTERY CHARGER 22	114.130	114.176	114.033	114.152	114.152	114.127	114.152	114.167	114.209	114.131	114.209	114.207	114.157	114.210
4	DP-22AA	DIST. PNL 22AA (EPF2)	113.979	114.025	113.883	114.001	114.001	113.976	114.001	114.016	114.058	113.980	114.058	114.056	114.006	114.058
5	DA5 XFR SW	DA5 TRANSFER SWITCH	112.391	112.439	112.308	112.413	112.415	112.396	112.416	112.431	112.471	112.403	112.469	112.470	112.430	112.471
6	PG5	EMERG LTG NO. 213 (PG5)	111.833	111.881	111.750	111.855	111.857	111.838	111.858	111.872	111.913	111.845	111.911	111.911	111.871	111.912
7	PG9	EMERG LTG NO. 218 (PG9)	112.374	112.428	112.325	112.396	112.406	112.403	112.409	112.421	112.460	112.420	112.452	112.461	112.447	112.457
8	DP-22A	DIST. PNL 22A (EPB1)	113.661	113.708	113.565	113.684	113.684	113.659	113.684	113.699	113.741	113.663	113.741	113.739	113.689	113.742
9	INV-EGA6	1KVA INVERTER EGA6	112.293	112.340	112.194	112.315	112.315	112.289	112.315	112.330	112.373	112.293	112.373	112.371	112.320	112.373
10	BUS 2A	480V SWGR 21 BUS 2A (NORMAL SUPPLY)	109.186	113.605	113.463	113.580	113.575	110.158	113.580	113.596	113.633	108.221	113.636	113.630	110.188	113.637
11	EDG-23-E	DSL GEN 23 (EMERG SUPPLY)	113.653	113.319	105.909	105.902	105.828	105.779	105.950	105.722	113.156	113.081	113.157	113.156	113.110	113.155
12	BUS 6A	480V SWGR 22 BUS 6A (EMERG. SUPPLY)	110.379	113.413	113.271	113.388	113.388	113.363	113.389	113.404	113.442	109.070	113.445	113.163	110.405	113.446
13	REG-INV-1	REGULATOR INVERTER 1	110.556	110.605	110.457	110.579	110.579	110.553	110.580	110.595	110.639	110.557	110.639	110.636	110.585	110.639
14	SWGR 22	6900V SWGR 22 CONTROL UF/UV	113.025	113.203	107.704	113.057	113.056	113.032	113.057	113.766	113.808	113.730	113.808	113.806	113.756	113.808
15	EXC-CTL	EXCITER CUBICLE	113.328	113.374	113.232	113.350	113.350	113.325	113.350	113.365	113.407	113.329	113.407	113.404	113.355	113.407
16	RTB-BYA	REACTOR TRIP SWGR RTB & BYA	113.710	114.169	114.026	114.144	114.144	114.119	114.144	114.159	114.202	114.123	114.202	114.199	114.149	114.202
17	DP-22	DIST. PNL 22 (PC4)	112.150	111.806	111.665	111.781	111.781	111.757	111.782	111.796	112.235	112.156	112.233	112.231	112.182	112.233
18	SI-SOV	SAFETY INJECTION VALVE SOVs	110.308	109.970	109.831	109.946	109.946	109.922	109.946	109.961	110.390	110.314	110.390	110.388	110.340	110.390
19	EDG-22-CTL	DSL GEN 22 CONTROL (EMERG. SUPPLY)	110.880	104.486	104.352	104.460	104.460	104.439	104.459	104.474	111.032	110.960	111.036	111.034	110.990	111.033
20	INV-PA	10KVA INVERTER PA	111.789	111.832	111.686	111.807	111.807	111.782	111.808	111.823	111.866	111.786	111.866	111.864	111.813	111.866
21	INV-22	10KVA INVERTER 22	113.737	113.784	113.640	113.759	113.759	113.734	113.760	113.775	113.817	113.738	113.817	113.815	113.765	113.817
22	WV8	BATTERY 22 JUNCTION BOX	114.251	114.285	114.182	114.267	114.267	114.249	114.267	114.278	114.309	114.252	114.309	114.307	114.271	114.309
23	EXK3	PP22-1 SPLICE BOX	114.118	114.164	114.021	114.140	114.140	114.115	114.140	114.155	114.197	114.119	114.197	114.195	114.145	114.197
24	EDD2	BUS 2A XFER SW	110.834	113.795	113.653	113.771	113.768	111.481	113.771	113.786	113.825	110.191	113.828	113.823	111.511	113.828
25	EDD7	EDG23 XFER SW	113.691	113.383	106.551	106.553	106.485	106.438	106.598	106.389	113.239	113.163	113.240	113.239	113.192	113.239
26	EDD1	BUS 6A XFER SW	111.942	113.731	113.588	113.706	113.706	113.683	113.707	113.722	113.761	111.179	113.764	113.599	111.969	113.764
27	EXW1	DP22-10 SPLICE BOX	111.390	107.426	107.288	107.400	107.400	107.378	107.400	107.414	111.514	111.440	111.516	111.515	111.469	111.514
28	EDD6	EDG 22 XFER SW	110.998	105.164	105.029	105.139	105.139	105.117	105.138	105.152	111.143	111.071	111.146	111.145	111.100	111.144
29	EDK12	DP22 SPLICE BOX	113.543	113.474	113.332	113.450	113.449	113.425	113.450	113.465	113.624	113.546	113.624	113.621	113.572	113.624

Node Voltages

Generation Date: 03/06/2008 10:50 am

Battery: 22

Scenario: CMP22

Scenario Description: Battery 22 Composite Scenario

Continued on Page 5

			Time Step:	1	2	3	4	5	6	7	8	9	10	11	12	13	14
			Time Step Range:	0:00:00.0 to 0:00:01.0	0:00:01.0 to 0:00:01.1	0:00:01.1 to 0:00:02.0	0:00:02.0 to 0:00:03.0	0:00:03.0 to 0:00:03.1	0:00:03.1 to 0:00:04.0	0:00:04.0 to 0:00:05.0	0:00:05.0 to 0:00:10.0	0:00:10.0 to 0:00:10.1	0:00:10.1 to 0:00:11.0	0:00:11.0 to 0:00:13.0	0:00:13.0 to 0:00:13.1	0:00:13.1 to 0:00:14.0	0:00:14.0 to 0:00:25.0
Node	Name	Description		Node Voltage (VDC)	Node Voltage (VDC)	Node Voltage (VDC)	Node Voltage (VDC)	Node Voltage (VDC)	Node Voltage (VDC)	Node Voltage (VDC)	Node Voltage (VDC)	Node Voltage (VDC)	Node Voltage (VDC)	Node Voltage (VDC)	Node Voltage (VDC)	Node Voltage (VDC)	Node Voltage (VDC)
30	EDK13	DP22A SPLICE BOX		114.036	114.082	113.939	114.058	114.058	114.033	114.058	114.073	114.116	114.037	114.116	114.113	114.063	114.116
31	EDA5	CKT BKR ENCL		112.383	112.434	112.316	112.405	112.411	112.399	112.413	112.426	112.466	112.411	112.462	112.466	112.438	112.464
32	EWD8	TERM BOX PAB EL 98		112.382	112.434	112.317	112.404	112.411	112.400	112.412	112.426	112.466	112.412	112.461	112.465	112.439	112.464
33	DA5-M	XFR SW - SAME AS DA5 - MODEL ONLY		112.377	112.430	112.322	112.399	112.408	112.402	112.410	112.423	112.462	112.417	112.455	112.462	112.444	112.459
34	H70	PENETRATION H70		112.374	112.429	112.324	112.396	112.407	112.403	112.409	112.421	112.460	112.420	112.453	112.461	112.447	112.457
35	WS6	SPLICE BOX		112.375	112.429	112.324	112.397	112.407	112.402	112.409	112.422	112.461	112.419	112.453	112.461	112.446	112.458

Node Voltages

Generation Date: 03/06/2008 10:50 am

Battery: 22

Scenario: CMP22

Scenario Description: Battery 22 Composite Scenario

Continued from Page 2

Continued on Page 6

Node	Name	Description	15	16	17	18	19	20	21	22	23	24	25	26	27	28
		Time Step Range:	0:00:25.0 to 0:00:25.1	0:00:25.1 to 0:00:26.0	0:00:26.0 to 0:00:30.0	0:00:30.0 to 0:00:30.1	0:00:30.1 to 0:00:31.0	0:00:31.0 to 0:00:35.0	0:00:35.0 to 0:00:35.1	0:00:35.1 to 0:00:36.0	0:00:36.0 to 0:01:00.0	0:01:00.0 to 0:20:00.0	0:20:00.0 to 0:20:01.0	0:20:01.0 to 0:20:01.1	0:20:01.1 to 0:21:00.0	0:21:00.0 to 0:30:00.0
			Node Voltage (VDC)	**Node Voltage (VDC)**	**Node Voltage (VDC)**	**Node Voltage (VDC)**	**Node Voltage (VDC)**	**Node Voltage (VDC)**	**Node Voltage (VDC)**	**Node Voltage (VDC)**	**Node Voltage (VDC)**	**Node Voltage (VDC)**	**Node Voltage (VDC)**	**Node Voltage (VDC)**	**Node Voltage (VDC)**	**Node Voltage (VDC)**
1	B-22	BATTERY 22	114.567	114.567	114.567	114.567	114.567	114.567	114.567	114.567	114.567	115.150	114.659	114.659	114.659	114.836
2	PP-22	POWER PANEL 22 (PC2)	114.210	114.160	114.209	114.157	114.132	114.209	114.209	114.160	114.209	114.793	114.300	114.302	114.252	114.479
3	BC-22	BATTERY CHARGER 22	114.210	114.160	114.209	114.157	114.132	114.209	114.209	114.160	114.209	114.793	114.300	114.302	114.252	114.479
4	DP-22AA	DIST. PNL 22AA (EPF2)	114.058	114.009	114.058	114.006	113.981	114.058	114.058	114.009	114.058	114.641	114.149	114.151	114.101	114.327
5	DA5 XFR SW	DA5 TRANSFER SWITCH	112.471	112.432	112.470	112.429	112.405	112.470	112.471	112.431	112.470	113.044	112.570	112.570	112.523	112.735
6	PG5	EMERG LTG NO. 213 (PG5)	111.913	111.873	111.912	111.870	111.846	111.911	111.912	111.873	111.912	112.483	112.011	112.011	111.964	112.175
7	PG9	EMERG LTG NO. 218 (PG9)	112.460	112.448	112.457	112.444	112.422	112.453	112.457	112.447	112.456	113.027	112.588	112.578	112.540	112.718
8	DP-22A	DIST. PNL 22A (EPB1)	113.742	113.692	113.741	113.689	113.664	113.742	113.742	113.692	113.741	114.327	113.833	113.835	113.785	114.012
9	INV-EGA6	1KVA INVERTER EGA6	112.373	112.323	112.373	112.320	112.295	112.373	112.373	112.323	112.373	112.966	112.465	112.468	112.417	112.647
10	BUS 2A	480V SWGR 21 BUS 2A (NORMAL SUPPLY)	113.632	110.190	113.637	113.586	113.561	113.638	113.632	110.190	113.637	114.218	113.379	113.726	110.279	113.906
11	EDG-23-E	DSL GEN 23 (EMERG SUPPLY)	113.157	113.112	113.155	113.109	113.083	113.157	113.158	113.112	113.155	113.580	113.093	113.095	113.046	113.269
12	BUS 6A	480V SWGR 22 BUS 6A (EMERG. SUPPLY)	113.441	110.669	113.446	113.390	110.642	113.445	113.441	110.669	113.446	114.025	113.536	113.534	110.759	113.713
13	REG-INV-1	REGULATOR INVERTER 1	110.639	110.587	110.639	110.585	110.559	110.639	110.639	110.587	110.639	111.242	110.732	110.735	110.683	110.917
14	SWGR 22	6900V SWGR 22 CONTROL UF/UV	113.808	113.759	113.808	111.444	111.419	113.808	113.808	113.758	113.808	114.390	113.898	113.901	113.851	114.076
15	EXC-CTL	EXCITER CUBICLE	113.407	113.358	113.407	113.355	113.330	113.407	113.407	113.357	113.407	113.986	113.497	113.499	113.449	113.674
16	RTB-BYA	REACTOR TRIP SWGR RTB & BYA	114.202	114.152	114.202	114.149	114.124	114.202	114.202	114.152	114.202	114.785	114.292	114.295	114.244	114.471
17	DP-22	DIST. PNL 22 (PC4)	112.233	112.184	112.233	112.182	112.157	112.233	112.233	112.184	112.233	112.824	112.338	112.340	112.291	112.514
18	SI-SOV	SAFETY INJECTION VALVE SOVs	110.390	110.342	110.390	110.340	110.315	110.390	110.390	110.342	110.390	110.972	110.493	110.495	110.447	110.666
19	EDG-22-CTL	DSL GEN 22 CONTROL (EMERG. SUPPLY)	111.035	110.992	111.032	110.988	110.962	111.035	111.036	110.992	111.032	111.858	111.376	111.378	111.330	111.551
20	INV-PA	10KVA INVERTER PA	111.866	111.815	111.866	111.813	111.787	111.866	111.866	111.815	111.866	112.462	111.959	111.961	111.910	112.141
21	INV-22	10KVA INVERTER 22	113.817	113.767	113.817	113.765	113.740	113.817	113.817	113.767	113.817	114.403	113.908	113.910	113.860	114.087
22	WV8	BATTERY 22 JUNCTION BOX	114.309	114.273	114.309	114.271	114.253	114.309	114.309	114.273	114.309	114.892	114.400	114.401	114.365	114.578
23	EXK3	PP22-1 SPLICE BOX	114.197	114.148	114.197	114.145	114.120	114.197	114.197	114.148	114.197	114.781	114.286	114.290	114.240	114.467
24	EDD2	BUS 2A XFER SW	113.828	111.513	113.828	113.776	113.751	113.828	113.828	111.513	113.828	114.410	113.686	113.918	111.603	114.097
25	EDD7	EDG23 XFER SW	113.240	113.195	113.238	113.191	113.165	113.240	113.241	113.195	113.238	113.676	113.188	113.190	113.141	113.365
26	EDD1	BUS 6A XFER SW	113.761	112.123	113.764	113.710	112.097	113.764	113.761	112.123	113.764	114.345	113.854	113.854	112.215	114.032
27	EXW1	DP22-10 SPLICE BOX	111.516	111.471	111.514	111.468	111.442	111.516	111.516	111.471	111.514	112.246	111.762	111.764	111.716	111.938
28	EDD6	EDG 22 XFER SW	111.146	111.102	111.143	111.099	111.073	111.146	111.147	111.102	111.143	111.948	111.465	111.467	111.419	111.640
29	EDK12	DP22 SPLICE BOX	113.624	113.574	113.624	113.573	113.547	113.624	113.624	113.574	113.624	114.210	113.719	113.721	113.671	113.897

Node Voltages

Generation Date: 03/06/2008 10:50 am

Continued from Page 3

Continued on Page 7

Battery: 22

Scenario: CMP22

Scenario Description: Battery 22 Composite Scenario

Node	Name	Description	15	16	17	18	19	20	21	22	23	24	25	26	27	28
		Time Step Range:	0:00:25.0 to 0:00:25.1	0:00:25.1 to 0:00:26.0	0:00:26.0 to 0:00:30.0	0:00:30.0 to 0:00:30.1	0:00:30.1 to 0:00:31.0	0:00:31.0 to 0:00:35.0	0:00:35.0 to 0:00:35.1	0:00:35.1 to 0:00:36.0	0:00:36.0 to 0:01:00.0	0:01:00.0 to 0:20:00.0	0:20:00.0 to 0:20:01.0	0:20:01.0 to 0:20:01.1	0:20:01.1 to 0:21:00.0	0:21:00.0 to 0:30:00.0
		Node Voltage (VDC)	Node Voltage (VDC)	Node Voltage (VDC)	Node Voltage (VDC)	Node Voltage (VDC)	Node Voltage (VDC)	Node Voltage (VDC)	Node Voltage (VDC)	Node Voltage (VDC)	Node Voltage (VDC)	Node Voltage (VDC)	Node Voltage (VDC)	Node Voltage (VDC)	Node Voltage (VDC)	Node Voltage (VDC)
30	EDK13	DP22A SPLICE BOX	114.116	114.066	114.116	114.063	114.038	114.116	114.116	114.066	114.116	114.700	114.206	114.209	114.158	114.385
31	EDA5	CKT BKR ENCL	112.466	112.439	112.464	112.436	112.413	112.462	112.464	112.438	112.464	113.036	112.578	112.574	112.531	112.727
32	EWD8	TERM BOX PAB EL 98	112.466	112.440	112.463	112.437	112.414	112.461	112.464	112.439	112.463	113.035	112.579	112.574	112.532	112.726
33	DA5-M	XFR SW - SAME AS DA5 - MODEL ONLY	112.462	112.446	112.459	112.441	112.419	112.456	112.459	112.444	112.456	113.030	112.585	112.577	112.537	112.720
34	H70	PENETRATION H70	112.460	112.448	112.457	112.443	112.421	112.454	112.457	112.446	112.456	113.028	112.587	112.578	112.540	112.718
35	WS6	SPLICE BOX	112.461	112.447	112.457	112.443	112.421	112.454	112.456	112.446	112.457	113.028	112.587	112.578	112.539	112.719

Node Voltages

Generation Date: 03/06/2008 10:50 am

Battery: 22

Scenario: CMP22

Scenario Description: Battery 22 Composite Scenario

Continued from Page 4

			Time Step: 29	30	31	32	33	34	35	36	37					
			Time Step Range: 0:30:00.0 to 1:00:00.0	1:00:00.0 to 1:30:00.0	1:30:00.0 to 1:59:00.0	1:59:00.0 to 1:59:00.1	1:59:00.1 to 1:59:01.0	1:59:01.0 to 1:59:01.1	1:59:01.1 to 1:59:02.0	1:59:02.0 to 1:59:02.1	1:59:02.1 to 2:00:00.0					
Node	Name	Description	Node Voltage (VDC)	Node Voltage (VDC)	Node Voltage (VDC)	Node Voltage (VDC)	Node Voltage (VDC)	Node Voltage (VDC)	Node Voltage (VDC)	Node Voltage (VDC)	Node Voltage (VDC)	Node Voltage (VDC)	Node Voltage (VDC)	Node Voltage (VDC)	Node Voltage (VDC)	Node Voltage (VDC)
1	B-22	BATTERY 22	113.783	113.222	112.668	110.597	110.597	110.597	110.597	110.597	110.597					
2	PP-22	POWER PANEL 22 (PC2)	113.428	112.866	112.313	110.242	110.193	110.217	110.077	110.211	110.150					
3	BC-22	BATTERY CHARGER 22	113.428	112.866	112.313	110.242	110.193	110.217	110.077	110.211	110.150					
4	DP-22AA	DIST. PNL 22AA (EPF2)	113.278	112.716	112.164	110.096	110.047	110.071	109.931	110.065	110.005					
5	DA5 XFR SW	DA5 TRANSFER SWITCH	111.711	111.158	110.612	108.573	108.526	108.543	108.411	108.531	108.484					
6	PG5	EMERG LTG NO. 213 (PG5)	111.156	110.605	110.064	108.034	107.986	108.003	107.873	107.992	107.945					
7	PG9	EMERG LTG NO. 218 (PG9)	111.726	111.174	110.631	108.590	108.542	108.540	108.429	108.514	108.500					
8	DP-22A	DIST. PNL 22A (EPB1)	112.957	112.393	111.838	109.758	109.709	109.733	109.592	109.727	109.666					
9	INV-EGA6	1KVA INVERTER EGA6	111.579	111.008	110.446	108.335	108.289	108.314	108.171	108.307	108.246					
10	BUS 2A	480V SWGR 21 BUS 2A (NORMAL SUPPLY)	112.860	112.301	111.751	109.685	106.361	109.664	109.526	109.659	109.599					
11	EDG-23-E	DSL GEN 23 (EMERG SUPPLY)	112.230	111.764	111.217	109.166	109.118	109.139	109.002	109.135	109.078					
12	BUS 6A	480V SWGR 22 BUS 6A (EMERG. SUPPLY)	112.669	112.111	111.562	109.501	106.824	106.847	106.712	106.841	106.783					
13	REG-INV-1	REGULATOR INVERTER 1	109.831	109.250	108.678	106.533	106.483	106.508	106.363	106.501	106.439					
14	SWGR 22	6900V SWGR 22 CONTROL UF/UV	113.029	112.469	111.918	109.854	109.806	109.827	103.528	109.546	106.823					
15	EXC-CTL	EXCITER CUBICLE	112.631	112.073	111.524	109.467	109.419	109.443	109.303	109.436	109.376					
16	RTB-BYA	REACTOR TRIP SWGR RTB & BYA	113.420	112.858	112.305	110.234	110.186	110.210	110.069	110.203	110.143					
17	DP-22	DIST. PNL 22 (PC4)	111.492	110.918	110.377	108.332	108.284	108.307	108.169	108.301	108.242					
18	SI-SOV	SAFETY INJECTION VALVE SOVs	109.661	109.096	108.564	106.553	106.506	106.529	106.393	106.523	106.465					
19	EDG-22-CTL	DSL GEN 22 CONTROL (EMERG. SUPPLY)	110.766	109.895	109.432	107.404	107.357	107.378	107.243	107.374	107.319					
20	INV-PA	10KVA INVERTER PA	111.068	110.493	109.928	107.810	107.761	107.785	107.642	107.778	107.717					
21	INV-22	10KVA INVERTER 22	113.033	112.469	111.914	109.839	109.787	109.810	109.670	109.804	109.744					
22	WV8	BATTERY 22 JUNCTION BOX	113.527	112.965	112.412	110.340	110.305	110.323	110.221	110.318	110.274					
23	EXK3	PP22-1 SPLICE BOX	113.416	112.854	112.301	110.230	110.181	110.205	110.065	110.199	110.139					
24	EDD2	BUS 2A XFER SW	113.049	112.489	111.938	109.871	107.638	109.849	109.710	109.843	109.783					
25	EDD7	EDG23 XFER SW	112.324	111.851	111.303	109.251	109.203	109.225	109.087	109.219	109.162					
26	EDD1	BUS 6A XFER SW	112.985	112.425	111.875	109.809	108.228	108.251	108.114	108.245	108.186					
27	EXW1	DP22-10 SPLICE BOX	111.058	110.306	109.811	107.777	107.730	107.751	107.615	107.746	107.690					
28	EDD6	EDG 22 XFER SW	110.834	109.990	109.519	107.490	107.443	107.464	107.329	107.460	107.404					
29	EDK12	DP22 SPLICE BOX	112.854	112.289	111.739	109.676	109.628	109.651	109.512	109.645	109.585					

Node Voltages

Generation Date: 03/06/2008 10:50 am

Battery: 22

Scenario: CMP22

Scenario Description: Battery 22 Composite Scenario

Continued from Page 5

			Time Step: 29	30	31	32	33	34	35	36	37					
			Time Step Range: 0:30:00.0 to 1:00:00.0	1:00:00.0 to 1:30:00.0	1:30:00.0 to 1:59:00.0	1:59:00.0 to 1:59:00.1	1:59:00.1 to 1:59:01.0	1:59:01.0 to 1:59:01.1	1:59:01.1 to 1:59:02.0	1:59:02.0 to 1:59:02.1	1:59:02.1 to 2:00:00.0					
Node	Name	Description	Node Voltage (VDC)	Node Voltage (VDC)	Node Voltage (VDC)	Node Voltage (VDC)	Node Voltage (VDC)	Node Voltage (VDC)	Node Voltage (VDC)	Node Voltage (VDC)	Node Voltage (VDC)	Node Voltage (VDC)	Node Voltage (VDC)	Node Voltage (VDC)	Node Voltage (VDC)	Node Voltage (VDC)
30	EDK13	DP22A SPLICE BOX	113.333	112.771	112.218	110.145	110.096	110.120	109.980	110.113	110.053					
31	EDA5	CKT BKR ENCL	111.719	111.165	110.621	108.581	108.533	108.541	108.419	108.523	108.491					
32	EWD8	TERM BOX PAB EL 98	111.720	111.166	110.622	108.582	108.534	108.541	108.420	108.522	108.492					
33	DA5-M	XFR SW - SAME AS DA5 - MODEL ONLY	111.726	111.172	110.626	108.587	108.540	108.540	108.426	108.517	108.498					
34	H70	PENETRATION H70	111.728	111.174	110.630	108.589	108.542	108.540	108.428	108.515	108.500					
35	WS6	SPLICE BOX	111.727	111.173	110.630	108.589	108.541	108.540	108.428	108.515	108.499					

Attachment F
Node Voltages

Revised pages

By: Robert Pitcher Date: 8/26/05
Check: [illegible] Date: 8-26-05

Node Voltages

Generation Date: 08/23/2005 06:12 pm

Battery: 22

Scenario: CMP22

Scenario Description: Battery 22 Composite Scenario

Continued on Page 4

Node	Name	Description	1 (0:00:00.0 to 0:00:01.0) Node Voltage (VDC)	2 (0:00:01.0 to 0:00:01.1) Node Voltage (VDC)	3 (0:00:01.1 to 0:00:02.0) Node Voltage (VDC)	4 (0:00:02.0 to 0:00:03.0) Node Voltage (VDC)	5 (0:00:03.0 to 0:00:03.1) Node Voltage (VDC)	6 (0:00:03.1 to 0:00:04.0) Node Voltage (VDC)	7 (0:00:04.0 to 0:00:05.0) Node Voltage (VDC)	8 (0:00:05.0 to 0:00:10.0) Node Voltage (VDC)	9 (0:00:10.0 to 0:00:10.1) Node Voltage (VDC)	10 (0:00:10.1 to 0:00:11.0) Node Voltage (VDC)	11 (0:00:11.0 to 0:00:13.0) Node Voltage (VDC)	12 (0:00:13.0 to 0:00:13.1) Node Voltage (VDC)	13 (0:00:13.1 to 0:00:14.0) Node Voltage (VDC)	14 (0:00:14.0 to 0:00:25.0) Node Voltage (VDC)
1	B-22	BATTERY 22	116.000	116.000	116.000	116.000	116.000	116.000	116.000	116.000	116.000	116.000	116.000	116.000	116.000	116.000
2	PP-22	POWER PANEL 22 (PC2)	115.677	115.718	115.595	115.716	115.716	115.691	115.716	115.732	115.732	115.692	115.732	115.732	115.706	115.732
3	BC-22	BATTERY CHARGER 22	115.677	115.718	115.595	115.716	115.716	115.691	115.716	115.732	115.732	115.692	115.732	115.732	115.706	115.732
4	DP-22AA	DIST. PNL 22AA (EPF2)	115.524	115.565	115.442	115.563	115.563	115.538	115.563	115.578	115.578	115.539	115.578	115.578	115.553	115.578
5	DA5 XFR SW	DA5 TRANSFER SWITCH	115.642	115.683	115.572	115.681	115.682	115.663	115.684	115.698	115.699	115.667	115.698	115.699	115.680	115.700
6	PG5	EMERG LTG NO. 213 (PG5)	115.642	115.683	115.572	115.681	115.682	115.663	115.684	115.698	115.699	115.667	115.699	115.699	115.680	115.700
7	PG9	EMERG LTG NO. 218 (PG9)	115.625	115.666	115.589	115.664	115.666	115.666	115.675	115.687	115.689	115.680	115.687	115.690	115.686	115.692
8	DP-22A	DIST. PNL 22A (EPB1)	115.219	115.260	115.136	115.258	115.258	115.233	115.258	115.274	115.274	115.234	115.274	115.274	115.248	115.274
9	INV-EGA6	1KVA INVERTER EGA6	113.869	113.911	113.785	113.908	113.908	113.883	113.908	113.924	113.924	113.884	113.924	113.924	113.899	113.924
10	BUS 2A	480V SWGR 21 BUS 2A (NORMAL SUPPLY)	110.688	115.162	115.035	115.180	115.154	111.690	115.159	115.175	115.170	109.724	115.174	115.170	111.705	115.175
11	EDG-23-E	DSL GEN 23 (EMERG SUPPLY)	115.523	115.564	115.441	115.562	115.562	115.539	115.560	115.576	115.577	115.541	115.575	115.577	115.555	115.576
12	BUS 6A	480V SWGR 22 BUS 6A (EMERG. SUPPLY)	115.677	115.718	115.595	115.716	115.716	115.691	115.716	115.732	115.732	115.692	115.732	115.732	115.706	115.732
13	REG-INV-1	REGULATOR INVERTER 1	112.155	112.197	112.070	112.195	112.195	112.169	112.195	112.211	112.211	112.170	112.211	112.211	112.185	112.211
14	SWGR 22	6900V SWGR 22 CONTROL UF/UV	114.571	114.745	109.191	114.638	114.638	114.613	114.638	115.339	115.338	115.299	115.338	115.339	115.313	115.339
15	EXC-CTL	EXCITER CUBICLE	114.884	114.925	114.802	114.922	114.922	114.897	114.922	114.938	114.938	114.899	114.938	114.938	114.913	114.938
16	RTB-BYA	REACTOR TRIP SWGR RTB & BYA	115.252	115.710	115.587	115.708	115.708	115.683	115.708	115.724	115.724	115.684	115.724	115.724	115.698	115.724
17	DP-22	DIST. PNL 22 (PC4)	113.849	113.889	113.767	113.887	113.887	113.862	113.887	113.902	113.902	113.864	113.902	113.902	113.878	113.902
18	SI-SOV	SAFETY INJECTION VALVE SOVs	111.985	112.025	111.905	112.022	112.022	111.998	112.022	112.037	112.037	111.999	112.037	112.037	112.013	112.037
19	EDG-22-CTL	DSL GEN 22 CONTROL (EMERG. SUPPLY)	113.720	113.760	113.639	113.758	113.758	113.736	113.756	113.772	113.773	113.738	113.770	113.772	113.751	113.771
20	INV-PA	10KVA INVERTER PA	113.365	113.407	113.281	113.404	113.404	113.379	113.405	113.420	113.420	113.380	113.420	113.420	113.399	113.420
21	INV-22	10KVA INVERTER 22	115.306	115.346	115.224	115.345	115.345	115.320	115.345	115.361	115.361	115.321	115.361	115.361	115.336	115.361
22	WV8	BATTERY 22 JUNCTION BOX	115.767	115.797	115.707	115.795	115.795	115.777	115.795	115.806	115.806	115.778	115.806	115.806	115.788	115.806
23	EXK3	PP22-1 SPLICE BOX	115.665	115.706	115.583	115.704	115.704	115.678	115.704	115.719	115.719	115.680	115.719	115.719	115.694	115.719
24	EDD2	BUS 2A XFER SW	112.351	115.348	115.225	115.345	115.341	113.023	115.345	115.361	115.357	111.713	115.360	115.357	113.039	115.360
25	EDD7	EDG23 XFER SW	115.536	115.576	115.454	115.574	115.574	115.551	115.573	115.589	115.590	115.553	115.588	115.589	115.566	115.589
26	EDD1	BUS 6A XFER SW	115.677	115.718	115.595	115.716	115.716	115.691	115.716	115.732	115.732	115.692	115.732	115.732	115.706	115.732
27	EXW1	DP22-10 SPLICE BOX	113.771	113.812	113.690	113.810	113.810	113.787	113.808	113.824	113.825	113.785	113.823	113.824	113.802	113.824
28	EDD6	EDG 22 XFER SW	113.732	113.772	113.651	113.770	113.770	113.747	113.768	113.784	113.785	113.750	113.783	113.784	113.763	113.784
29	EDK12	DP22 SPLICE BOX	115.135	115.176	115.053	115.174	115.174	115.149	115.174	115.190	115.190	115.150	115.190	115.190	115.165	115.190

Node Voltages

Generation Date: 08/23/2005 06:12 pm

Battery: 22

Scenario: CMP22

Scenario Description: Battery 22 Composite Scenario

Continued on Page 5

			Time Step: 1	2	3	4	5	6	7	8	9	10	11	12	13	14
			Time Step Range: 0:00:00.0 to 0:00:01.0	0:00:01.0 to 0:00:01.1	0:00:01.1 to 0:00:02.0	0:00:02.0 to 0:00:03.0	0:00:03.0 to 0:00:03.1	0:00:03.1 to 0:00:04.0	0:00:04.0 to 0:00:05.0	0:00:05.0 to 0:00:10.0	0:00:10.0 to 0:00:10.1	0:00:10.1 to 0:00:11.0	0:00:11.0 to 0:00:13.0	0:00:13.0 to 0:00:13.1	0:00:13.1 to 0:00:14.0	0:00:14.0 to 0:00:25.0
Node	**Name**	**Description**	**Node Voltage (VDC)**	**Node Voltage (VDC)**	**Node Voltage (VDC)**	**Node Voltage (VDC)**	**Node Voltage (VDC)**	**Node Voltage (VDC)**	**Node Voltage (VDC)**	**Node Voltage (VDC)**	**Node Voltage (VDC)**	**Node Voltage (VDC)**	**Node Voltage (VDC)**	**Node Voltage (VDC)**	**Node Voltage (VDC)**	**Node Voltage (VDC)**
30	EDK13	DP22A SPLICE BOX	115.588	115.629	115.506	115.627	115.627	115.602	115.627	115.643	115.643	115.603	115.643	115.643	115.618	115.643
31	EDA5	CKT BKR ENCL	115.634	115.675	115.580	115.673	115.676	115.665	115.680	115.693	115.695	115.673	115.693	115.695	115.683	115.696
32	EWD8	TERM BOX PAB EL 98	115.633	115.674	115.581	115.672	115.675	115.666	115.679	115.692	115.694	115.674	115.693	115.694	115.683	115.696
33	DA5-M	XFR SW - SAME AS DA5 - MODEL ONLY	115.628	115.669	115.586	115.667	115.670	115.667	115.676	115.688	115.691	115.676	115.689	115.691	115.685	115.693
34	H70	PENETRATION H70	115.626	115.667	115.588	115.665	115.668	115.668	115.675	115.687	115.690	115.680	115.687	115.690	115.686	115.692
35	WS6	SPLICE BOX	115.626	115.667	115.588	115.665	115.669	115.668	115.675	115.687	115.690	115.680	115.688	115.690	115.686	115.692

Node Voltages

Generation Date: 08/23/2005 06:12 pm

Battery: 22

Scenario: CMP22

Scenario Description: Battery 22 Composite Scenario

Continued from Page 2

Continued on Page 6

Node	Name	Description	15	16	17	18	19	20	21	22	23	24	25	26	27	28
		Time Step Range:	0:00:25.0 to 0:00:25.1	0:00:25.1 to 0:00:26.0	0:00:26.0 to 0:00:30.0	0:00:30.0 to 0:00:30.1	0:00:30.1 to 0:00:31.0	0:00:31.0 to 0:00:35.0	0:00:35.0 to 0:00:35.1	0:00:35.1 to 0:00:36.0	0:00:36.0 to 0:01:00.0	0:01:00.0 to 0:20:00.0	0:20:00.0 to 0:20:01.0	0:20:01.0 to 0:20:01.1	0:20:01.1 to 0:21:00.0	0:21:00.0 to 0:30:00.0
			Node Voltage (VDC)	Node Voltage (VDC)	Node Voltage (VDC)	Node Voltage (VDC)	Node Voltage (VDC)	Node Voltage (VDC)	Node Voltage (VDC)	Node Voltage (VDC)	Node Voltage (VDC)	Node Voltage (VDC)	Node Voltage (VDC)	Node Voltage (VDC)	Node Voltage (VDC)	Node Voltage (VDC)
1	B-22	BATTERY 22	116.000	116.000	116.000	116.000	116.000	116.000	116.000	116.000	116.000	116.000	116.000	116.000	116.000	116.000
2	PP-22	POWER PANEL 22 (PC2)	115.732	115.706	115.732	115.679	115.679	115.732	115.732	115.706	115.732	115.732	115.729	115.732	115.707	115.732
3	BC-22	BATTERY CHARGER 22	115.732	115.706	115.732	115.679	115.679	115.732	115.732	115.706	115.732	115.732	115.729	115.732	115.707	115.732
4	DP-22AA	DIST. PNL 22AA (EPF2)	115.578	115.553	115.578	115.526	115.525	115.578	115.578	115.553	115.578	115.578	115.576	115.579	115.553	115.578
5	DA5 XFR SW	DA5 TRANSFER SWITCH	115.700	115.680	115.700	115.656	115.655	115.697	115.698	115.679	115.700	115.700	115.699	115.701	115.681	115.700
6	PG5	EMERG LTG NO. 213 (PG5)	115.700	115.680	115.700	115.655	115.655	115.697	115.698	115.679	115.700	115.700	115.699	115.701	115.681	115.700
7	PG9	EMERG LTG NO. 218 (PG9)	115.694	115.688	115.693	115.673	115.672	115.683	115.686	115.685	115.691	115.692	115.696	115.698	115.690	115.694
8	DP-22A	DIST. PNL 22A (EPB1)	115.274	115.248	115.274	115.221	115.221	115.274	115.274	115.248	115.274	115.274	115.271	115.274	115.249	115.274
9	INV-EGA6	1KVA INVERTER EGA6	113.924	113.899	113.924	113.870	113.870	113.924	113.924	113.899	113.924	113.924	113.922	113.924	113.899	113.924
10	BUS 2A	480V SWGR 21 BUS 2A (NORMAL SUPPLY)	115.170	111.705	115.175	115.123	115.123	115.175	115.170	111.705	115.175	115.175	114.819	115.171	111.705	115.175
11	EDG-23-E	DSL GEN 23 (EMERG SUPPLY)	115.577	115.555	115.576	115.527	115.526	115.575	115.577	115.555	115.576	115.577	115.578	115.578	115.555	115.576
12	BUS 6A	480V SWGR 22 BUS 6A (EMERG. SUPPLY)	115.732	115.706	115.732	115.679	115.679	115.732	115.732	115.706	115.732	115.732	115.729	115.732	115.706	115.732
13	REG-INV-1	REGULATOR INVERTER 1	112.211	112.185	112.211	112.156	112.156	112.211	112.211	112.185	112.211	112.211	112.208	112.211	112.185	112.211
14	SWGR 22	6900V SWGR 22 CONTROL UF/UV	115.339	115.313	115.339	112.942	112.942	115.339	115.338	115.313	115.339	115.339	115.336	115.339	115.313	115.339
15	EXC-CTL	EXCITER CUBICLE	114.938	114.913	114.938	114.885	114.885	114.938	114.938	114.913	114.938	114.938	114.935	114.938	114.913	114.938
16	RTB-BYA	REACTOR TRIP SWGR RTB & BYA	115.724	115.699	115.724	115.671	115.671	115.724	115.724	115.698	115.724	115.724	115.721	115.724	115.699	115.724
17	DP-22	DIST. PNL 22 (PC4)	113.902	113.878	113.902	113.850	113.850	113.902	113.902	113.878	113.902	113.902	113.900	113.902	113.878	113.902
18	SI-SOV	SAFETY INJECTION VALVE SOVs	112.038	112.013	112.037	111.986	111.986	112.037	112.037	112.013	112.037	112.037	112.035	112.038	112.013	112.037
19	EDG-22-CTL	DSL GEN 22 CONTROL (EMERG. SUPPLY)	113.773	113.751	113.771	113.724	113.723	113.770	113.772	113.751	113.771	113.772	113.771	113.773	113.751	113.771
20	INV-PA	10KVA INVERTER PA	113.420	113.395	113.420	113.366	113.366	113.420	113.420	113.395	113.420	113.420	113.418	113.421	113.395	113.421
21	INV-22	10KVA INVERTER 22	115.361	115.336	115.361	115.306	115.306	115.361	115.361	115.336	115.361	115.361	115.359	115.361	115.336	115.361
22	WV8	BATTERY 22 JUNCTION BOX	115.806	115.788	115.806	115.768	115.768	115.806	115.806	115.788	115.806	115.806	115.804	115.806	115.788	115.806
23	EXK3	PP22-1 SPLICE BOX	115.719	115.694	115.719	115.666	115.666	115.719	115.719	115.694	115.719	115.719	115.717	115.719	115.694	115.719
24	EDD2	BUS 2A XFER SW	115.357	113.039	115.360	115.308	115.308	115.361	115.357	113.039	115.360	115.361	115.122	115.358	113.039	115.360
25	EDD7	EDG23 XFER SW	115.589	115.566	115.589	115.539	115.538	115.588	115.589	115.566	115.589	115.589	115.586	115.590	115.566	115.589
26	EDD1	BUS 6A XFER SW	115.732	115.706	115.732	115.679	115.679	115.732	115.732	115.706	115.732	115.732	115.729	115.732	115.706	115.732
27	EXW1	DP22-10 SPLICE BOX	113.825	113.802	113.824	113.775	113.774	113.823	113.824	113.802	113.824	113.824	113.823	113.825	113.802	113.824
28	EDD6	EDG 22 XFER SW	113.785	113.763	113.784	113.735	113.735	113.782	113.784	113.763	113.784	113.784	113.783	113.785	113.763	113.784
29	EDK12	DP22 SPLICE BOX	115.190	115.165	115.190	115.137	115.137	115.189	115.190	115.165	115.190	115.190	115.187	115.190	115.165	115.190

Node Voltages

Generation Date: 08/23/2005 06:12 pm

Battery: 22

Scenario: CMP22

Scenario Description: Battery 22 Composite Scenario

Continued from Page 3

Continued on Page 7

			Time Step:	15	16	17	18	19	20	21	22	23	24	25	26	27	28
			Time Step Range:	0:00:25.0 to 0:00:25.1	0:00:25.1 to 0:00:26.0	0:00:26.0 to 0:00:30.0	0:00:30.0 to 0:00:30.1	0:00:30.1 to 0:00:31.0	0:00:31.0 to 0:00:35.0	0:00:35.0 to 0:00:35.1	0:00:35.1 to 0:00:36.0	0:00:36.0 to 0:01:00.0	0:01:00.0 to 0:20:00.0	0:20:00.0 to 0:20:01.0	0:20:01.0 to 0:20:01.1	0:20:01.1 to 0:21:00.0	0:21:00.0 to 0:30:00.0
Node	**Name**	**Description**		**Node Voltage (VDC)**	**Node Voltage (VDC)**	**Node Voltage (VDC)**	**Node Voltage (VDC)**	**Node Voltage (VDC)**	**Node Voltage (VDC)**	**Node Voltage (VDC)**	**Node Voltage (VDC)**	**Node Voltage (VDC)**	**Node Voltage (VDC)**	**Node Voltage (VDC)**	**Node Voltage (VDC)**	**Node Voltage (VDC)**	**Node Voltage (VDC)**
30	EDK13	DP22A SPLICE BOX		115.643	115.618	115.643	115.590	115.590	115.643	115.643	115.618	115.643	115.643	115.640	115.643	115.618	115.643
31	EDA5	CKT BKR ENCL		115.697	115.684	115.697	115.664	115.663	115.691	115.693	115.682	115.696	115.696	115.697	115.700	115.685	115.697
32	EWD8	TERM BOX PAB EL 98		115.697	115.684	115.696	115.665	115.664	115.690	115.692	115.682	115.695	115.695	115.697	115.700	115.686	115.697
33	DA5-M	XFR SW - SAME AS DA5 - MODEL ONLY		115.695	115.687	115.694	115.670	115.669	115.685	115.688	115.684	115.692	115.693	115.696	115.699	115.689	115.695
34	H70	PENETRATION H70		115.694	115.688	115.693	115.672	115.671	115.683	115.687	115.685	115.691	115.692	115.696	115.698	115.690	115.694
35	WS6	SPLICE BOX		115.694	115.688	115.693	115.672	115.671	115.684	115.687	115.684	115.691	115.692	115.696	115.698	115.690	115.694

Node Voltages

Generation Date: 08/23/2005 06:12 pm

Battery: 22

Continued from Page 4

Scenario: CMP22

Scenario Description: Battery 22 Composite Scenario

Node	Name	Description	Node Voltage (VDC)	Node Voltage (VDC)	Node Voltage (VDC)	Node Voltage (VDC)	Node Voltage (VDC)	Node Voltage (VDC)	Node Voltage (VDC)	Node Voltage (VDC)	Node Voltage (VDC)	Node Voltage (VDC)	Node Voltage (VDC)	Node Voltage (VDC)	Node Voltage (VDC)	Node Voltage (VDC)
		Time Step:	29	30	31	32	33	34	35	36	37					
		Time Step Range:	0:30:00.0 to 1:00:00.0	1:00:00.0 to 1:30:00.0	1:30:00.0 to 1:59:00.0	1:59:00.0 to 1:59:00.1	1:59:00.1 to 1:59:01.0	1:59:01.0 to 1:59:01.1	1:59:01.1 to 1:59:02.0	1:59:02.0 to 1:59:02.1	1:59:02.1 to 2:00:00.0					
1	B-22	BATTERY 22	115.039	114.689	114.439	113.006	113.006	113.006	113.006	113.006	113.006					
2	PP-22	POWER PANEL 22 (PC2)	114.771	114.420	114.170	112.737	112.712	112.736	112.593	112.730	112.668					
3	BC-22	BATTERY CHARGER 22	114.771	114.420	114.170	112.737	112.712	112.736	112.593	112.730	112.668					
4	DP-22AA	DIST. PNL 22AA (EPF2)	114.619	114.269	114.019	112.587	112.563	112.587	112.444	112.580	112.519					
5	DA5 XFR SW	DA5 TRANSFER SWITCH	114.748	114.397	114.147	112.714	112.689	112.707	112.570	112.695	112.645					
6	PG5	EMERG LTG NO. 213 (PG5)	114.748	114.397	114.147	112.714	112.689	112.707	112.570	112.695	112.645					
7	PG9	EMERG LTG NO. 218 (PG9)	114.765	114.414	114.164	112.731	112.706	112.704	112.587	112.678	112.662					
8	DP-22A	DIST. PNL 22A (EPB1)	114.310	113.958	113.706	112.267	112.242	112.267	112.123	112.260	112.198					
9	INV-EGA6	1KVA INVERTER EGA6	112.948	112.592	112.338	110.881	110.855	110.880	110.734	110.873	110.811					
10	BUS 2A	480V SWGR 21 BUS 2A (NORMAL SUPPLY)	114.220	113.870	113.622	112.190	108.813	112.193	112.052	112.188	112.126					
11	EDG-23-E	DSL GEN 23 (EMERG SUPPLY)	114.619	114.268	114.019	112.587	112.563	112.585	112.443	112.580	112.521					
12	BUS 6A	480V SWGR 22 BUS 6A (EMERG. SUPPLY)	114.771	114.420	114.170	112.737	112.712	112.736	112.593	112.730	112.668					
13	REG-INV-1	REGULATOR INVERTER 1	111.219	110.857	110.598	109.116	109.090	109.116	108.967	109.109	109.045					
14	SWGR 22	6900V SWGR 22 CONTROL UF/UV	114.381	114.032	113.782	112.354	112.329	112.350	105.906	112.063	109.277					
15	EXC-CTL	EXCITER CUBICLE	113.984	113.636	113.387	111.963	111.939	111.963	111.820	111.956	111.895					
16	RTB-BYA	REACTOR TRIP SWGR RTB & BYA	114.763	114.412	114.162	112.729	112.704	112.728	112.585	112.722	112.660					
17	DP-22	DIST. PNL 22 (PC4)	112.953	112.607	112.360	110.943	110.919	110.942	110.801	110.936	110.875					
18	SI-SOV	SAFETY INJECTION VALVE SOVs	111.104	110.763	110.520	109.127	109.103	109.126	108.987	109.120	109.060					
19	EDG-22-CTL	DSL GEN 22 CONTROL (EMERG. SUPPLY)	112.826	112.479	112.233	110.817	110.794	110.815	110.675	110.810	110.753					
20	INV-PA	10KVA INVERTER PA	112.440	112.082	111.826	110.361	110.336	110.361	110.214	110.354	110.291					
21	INV-22	10KVA INVERTER 22	114.397	114.045	113.794	112.356	112.331	112.356	112.212	112.349	112.287					
22	WV8	BATTERY 22 JUNCTION BOX	114.846	114.495	114.245	112.811	112.793	112.811	112.707	112.806	112.762					
23	EXK3	PP22-1 SPLICE BOX	114.759	114.408	114.158	112.725	112.700	112.724	112.581	112.718	112.656					
24	EDD2	BUS 2A XFER SW	114.403	114.054	113.804	112.372	110.112	112.374	112.232	112.368	112.307					
25	EDD7	EDG23 XFER SW	114.631	114.280	114.031	112.599	112.575	112.597	112.455	112.592	112.532					
26	EDD1	BUS 6A XFER SW	114.771	114.420	114.170	112.737	112.712	112.736	112.593	112.730	112.668					
27	EXW1	DP22-10 SPLICE BOX	112.877	112.531	112.284	110.868	110.844	110.866	110.726	110.861	110.802					
28	EDD6	EDG 22 XFER SW	112.837	112.491	112.244	110.829	110.806	110.827	110.687	110.822	110.764					
29	EDK12	DP22 SPLICE BOX	114.233	113.883	113.634	112.205	112.180	112.205	112.062	112.198	112.137					

Node Voltages

Generation Date: 08/23/2005 06:12 pm

Battery: 22

Scenario: CMP22

Scenario Description: Battery 22 Composite Scenario

Continued from Page 5

			Time Step:	29	30	31	32	33	34	35	36	37					
			Time Step Range:	0:30:00.0 to 1:00:00.0	1:00:00.0 to 1:30:00.0	1:30:00.0 to 1:59:00.0	1:59:00.0 to 1:59:00.1	1:59:00.1 to 1:59:01.0	1:59:01.0 to 1:59:01.1	1:59:01.1 to 1:59:02.0	1:59:02.0 to 1:59:02.1	1:59:02.1 to 2:00:00.0					
Node	Name	Description		Node Voltage (VDC)	Node Voltage (VDC)	Node Voltage (VDC)	Node Voltage (VDC)	Node Voltage (VDC)	Node Voltage (VDC)	Node Voltage (VDC)	Node Voltage (VDC)	Node Voltage (VDC)	Node Voltage (VDC)	Node Voltage (VDC)	Node Voltage (VDC)	Node Voltage (VDC)	Node Voltage (VDC)
30	EDK13	DP22A SPLICE BOX		114.683	114.331	114.080	112.646	112.621	112.645	112.503	112.639	112.577					
31	EDA5	CKT BKR ENCL		114.758	114.405	114.155	112.722	112.697	112.705	112.578	112.687	112.653					
32	EWD8	TERM BOX PAB EL 98		114.757	114.400	114.156	112.723	112.698	112.705	112.579	112.686	112.654					
33	DA5-M	XFR SW - SAME AS DA5 - MODEL ONLY		114.763	114.411	114.161	112.728	112.703	112.704	112.584	112.681	112.659					
34	H70	PENETRATION H70		114.765	114.414	114.163	112.731	112.706	112.704	112.587	112.679	112.662					
35	WS6	SPLICE BOX		114.764	114.413	114.163	112.730	112.705	112.704	112.586	112.679	112.661					

Attachment G
Node Currents

Appendix revised
to account for
Transfer Switch loading

By: H Robinson Date: _____
Check: _____ Date: _____

Node Currents

Generation Date: 03/06/2008 10:50 am

Battery: 22

Scenario: CMP22

Scenario Description: Battery 22 Composite Scenario

Continued on Page 4

Node	Name	Description	Node Currents (ADC)	Node Currents (ADC)	Node Currents (ADC)	Node Currents (ADC)	Node Currents (ADC)	Node Currents (ADC)	Node Currents (ADC)	Node Currents (ADC)	Node Currents (ADC)	Node Currents (ADC)	Node Currents (ADC)	Node Currents (ADC)	Node Currents (ADC)	Node Currents (ADC)
		Time Step:	1	2	3	4	5	6	7	8	9	10	11	12	13	14
		Time Step Range:	0:00:00.0 to 0:00:01.0	0:00:01.0 to 0:00:01.1	0:00:01.1 to 0:00:02.0	0:00:02.0 to 0:00:03.0	0:00:03.0 to 0:00:03.1	0:00:03.1 to 0:00:04.0	0:00:04.0 to 0:00:05.0	0:00:05.0 to 0:00:10.0	0:00:10.0 to 0:00:10.1	0:00:10.1 to 0:00:11.0	0:00:11.0 to 0:00:13.0	0:00:13.0 to 0:00:13.1	0:00:13.1 to 0:00:14.0	0:00:14.0 to 0:00:25.0
1	B-22	BATTERY 22	305.10	272.58	372.77	289.59	289.77	307.35	289.48	278.93	249.41	304.70	249.36	251.19	286.22	249.36
2	PP-22	POWER PANEL 22 (PC2)	0.00	0.00	0.00	0.00	0.00	0.00	0.00	0.00	0.00	0.00	0.00	0.00	0.00	0.00
3	BC-22	BATTERY CHARGER 22	0.00	0.00	0.00	0.00	0.00	0.00	0.00	0.00	0.00	0.00	0.00	0.00	0.00	0.00
4	DP-22AA	DIST. PNL 22AA (EPF2)	3.03	3.03	3.03	3.03	3.03	3.03	3.03	3.03	3.03	3.03	3.03	3.03	3.03	3.03
5	DA5 XFR SW	DA5 TRANSFER SWITCH	0.85	0.85	0.85	0.85	0.85	0.85	0.85	0.85	0.85	0.85	0.85	0.85	0.85	0.85
6	PG5	EMERG LTG NO. 213 (PG5)	51.17	51.20	51.14	51.18	51.19	51.18	51.19	51.19	51.21	51.18	51.21	51.21	51.19	51.21
7	PG9	EMERG LTG NO. 218 (PG9)	0.00	0.00	0.00	0.00	0.00	0.00	0.00	0.00	0.00	0.00	0.00	0.00	0.00	0.00
8	DP-22A	DIST. PNL 22A (EPB1)	0.51	0.51	0.51	0.51	0.51	0.51	0.51	0.51	0.51	0.51	0.51	0.51	0.51	0.51
9	INV-EGA6	1KVA INVERTER EGA6	11.13	11.13	11.14	11.13	11.13	11.13	11.13	11.13	11.12	11.13	11.12	11.12	11.13	11.12
10	BUS 2A	480V SWGR 21 BUS 2A (NORMAL SUPPLY)	25.55	2.95	2.95	2.95	2.98	20.51	2.95	2.95	2.98	30.54	2.95	2.98	20.52	2.95
11	EDG-23-E	DSL GEN 23 (EMERG SUPPLY)	0.97	1.76	16.57	16.83	16.99	17.03	16.72	17.24	2.14	2.14	2.14	2.14	2.14	2.14
12	BUS 6A	480V SWGR 22 BUS 6A (EMERG. SUPPLY)	24.23	4.93	4.93	4.93	4.93	4.93	4.93	4.93	4.96	32.69	4.94	6.73	24.23	4.94
13	REG-INV-1	REGULATOR INVERTER 1	5.65	5.65	5.66	5.65	5.65	5.65	5.65	5.65	5.65	5.65	5.65	5.65	5.65	5.65
14	SWGR 22	6900V SWGR 22 CONTROL UF/UV	17.61	15.52	100.93	17.47	17.47	17.47	17.47	6.40	6.40	6.40	6.40	6.40	6.40	6.40
15	EXC-CTL	EXCITER CUBICLE	1.84	1.84	1.83	1.84	1.84	1.84	1.84	1.84	1.84	1.84	1.84	1.84	1.84	1.84
16	RTB-BYA	REACTOR TRIP SWGR RTB & BYA	3.71	0.07	0.07	0.07	0.07	0.07	0.07	0.07	0.07	0.07	0.07	0.07	0.07	0.07
17	DP-22	DIST. PNL 22 (PC4)	62.44	62.30	62.25	62.29	62.29	62.28	62.29	62.30	62.47	62.44	62.47	62.47	62.45	62.47
18	SI-SOV	SAFETY INJECTION VALVE SOVs	7.13	7.11	7.10	7.11	7.11	7.11	7.11	7.11	7.14	7.13	7.14	7.14	7.13	7.14
19	EDG-22-CTL	DSL GEN 22 CONTROL (EMERG. SUPPLY)	3.04	17.54	17.51	17.53	17.53	17.53	17.53	17.53	2.87	2.86	2.87	2.87	2.87	2.87
20	INV-PA	10KVA INVERTER PA	30.70	30.69	30.73	30.70	30.70	30.70	30.70	30.69	30.68	30.70	30.68	30.68	30.69	30.68
21	INV-22	10KVA INVERTER 22	55.53	55.51	55.58	55.52	55.52	55.53	55.52	55.51	55.49	55.53	55.49	55.50	55.52	55.49
22	WV8	BATTERY 22 JUNCTION BOX	0.00	0.00	0.00	0.00	0.00	0.00	0.00	0.00	0.00	0.00	0.00	0.00	0.00	0.00
23	EXK3	PP22-1 SPLICE BOX	0.00	0.00	0.00	0.00	0.00	0.00	0.00	0.00	0.00	0.00	0.00	0.00	0.00	0.00
24	EDD2	BUS 2A XFER SW	0.00	0.00	0.00	0.00	0.00	0.00	0.00	0.00	0.00	0.00	0.00	0.00	0.00	0.00
25	EDD7	EDG23 XFER SW	0.00	0.00	0.00	0.00	0.00	0.00	0.00	0.00	0.00	0.00	0.00	0.00	0.00	0.00
26	EDD1	BUS 6A XFER SW	0.00	0.00	0.00	0.00	0.00	0.00	0.00	0.00	0.00	0.00	0.00	0.00	0.00	0.00
27	EXW1	DP22-10 SPLICE BOX	0.00	0.00	0.00	0.00	0.00	0.00	0.00	0.00	0.00	0.00	0.00	0.00	0.00	0.00
28	EDD6	EDG 22 XFER SW	0.00	0.00	0.00	0.00	0.00	0.00	0.00	0.00	0.00	0.00	0.00	0.00	0.00	0.00
29	EDK12	DP22 SPLICE BOX	0.00	0.00	0.00	0.00	0.00	0.00	0.00	0.00	0.00	0.00	0.00	0.00	0.00	0.00

Node Currents

Generation Date: 03/06/2008 10:50 am

Battery: 22

Scenario: CMP22

Scenario Description: Battery 22 Composite Scenario

Continued on Page 5

			Time Step:	1	2	3	4	5	6	7	8	9	10	11	12	13	14
			Time Step Range:	0:00:00.0 to 0:00:01.0	0:00:01.0 to 0:00:01.1	0:00:01.1 to 0:00:02.0	0:00:02.0 to 0:00:03.0	0:00:03.0 to 0:00:03.1	0:00:03.1 to 0:00:04.0	0:00:04.0 to 0:00:05.0	0:00:05.0 to 0:00:10.0	0:00:10.0 to 0:00:10.1	0:00:10.1 to 0:00:11.0	0:00:11.0 to 0:00:13.0	0:00:13.0 to 0:00:13.1	0:00:13.1 to 0:00:14.0	0:00:14.0 to 0:00:25.0
Node	Name	Description		Node Currents (ADC)	Node Currents (ADC)	Node Currents (ADC)	Node Currents (ADC)	Node Currents (ADC)	Node Currents (ADC)	Node Currents (ADC)	Node Currents (ADC)	Node Currents (ADC)	Node Currents (ADC)	Node Currents (ADC)	Node Currents (ADC)	Node Currents (ADC)	Node Currents (ADC)
30	EDK13	DP22A SPLICE BOX		0.00	0.00	0.00	0.00	0.00	0.00	0.00	0.00	0.00	0.00	0.00	0.00	0.00	0.00
31	EDA5	CKT BKR ENCL		0.00	0.00	0.00	0.00	0.00	0.00	0.00	0.00	0.00	0.00	0.00	0.00	0.00	0.00
32	EWD8	TERM BOX PAB EL 98		0.00	0.00	0.00	0.00	0.00	0.00	0.00	0.00	0.00	0.00	0.00	0.00	0.00	0.00
33	DA5-M	XFR SW - SAME AS DA5 - MODEL ONLY		0.00	0.00	0.00	0.00	0.00	0.00	0.00	0.00	0.00	0.00	0.00	0.00	0.00	0.00
34	H70	PENETRATION H70		0.00	0.00	0.00	0.00	0.00	0.00	0.00	0.00	0.00	0.00	0.00	0.00	0.00	0.00
35	WS6	SPLICE BOX		0.00	0.00	0.00	0.00	0.00	0.00	0.00	0.00	0.00	0.00	0.00	0.00	0.00	0.00

Node Currents

Generation Date: 03/06/2008 10:50 am

Battery: 22

Scenario: CMP22

Scenario Description: Battery 22 Composite Scenario

Continued from Page 2

Continued on Page 6

Node	Name	Description	15	16	17	18	19	20	21	22	23	24	25	26	27	28
		Time Step:	15	16	17	18	19	20	21	22	23	24	25	26	27	28
		Time Step Range:	0:00:25.0 to 0:00:25.1	0:00:25.1 to 0:00:26.0	0:00:26.0 to 0:00:30.0	0:00:30.0 to 0:00:30.1	0:00:30.1 to 0:00:31.0	0:00:31.0 to 0:00:35.0	0:00:35.0 to 0:00:35.1	0:00:35.1 to 0:00:36.0	0:00:36.0 to 0:01:00.0	0:01:00.0 to 0:20:00.0	0:20:00.0 to 0:20:01.0	0:20:01.0 to 0:20:01.1	0:20:01.1 to 0:21:00.0	0:21:00.0 to 0:30:00.0
Node	Name	Description	Node Currents (ADC)	Node Currents (ADC)	Node Currents (ADC)	Node Currents (ADC)	Node Currents (ADC)	Node Currents (ADC)	Node Currents (ADC)	Node Currents (ADC)	Node Currents (ADC)	Node Currents (ADC)	Node Currents (ADC)	Node Currents (ADC)	Node Currents (ADC)	Node Currents (ADC)
1	B-22	BATTERY 22	249.41	284.54	249.36	286.25	303.82	249.36	249.41	284.54	249.36	249.24	250.95	249.19	284.34	249.18
2	PP-22	POWER PANEL 22 (PC2)	0.00	0.00	0.00	0.00	0.00	0.00	0.00	0.00	0.00	0.00	0.00	0.00	0.00	0.00
3	BC-22	BATTERY CHARGER 22	0.00	0.00	0.00	0.00	0.00	0.00	0.00	0.00	0.00	0.00	0.00	0.00	0.00	0.00
4	DP-22AA	DIST. PNL 22AA (EPF2)	3.03	3.03	3.03	3.03	3.03	3.03	3.03	3.03	3.03	3.05	3.03	3.03	3.03	3.04
5	DA5 XFR SW	DA5 TRANSFER SWITCH	0.85	0.85	0.85	0.85	0.85	0.85	0.85	0.85	0.85	0.85	0.85	0.85	0.85	0.85
6	PG5	EMERG LTG NO. 213 (PG5)	51.21	51.19	51.21	51.19	51.18	51.21	51.21	51.19	51.21	51.47	51.26	51.26	51.23	51.33
7	PG9	EMERG LTG NO. 218 (PG9)	0.00	0.00	0.00	0.00	0.00	0.00	0.00	0.00	0.00	0.00	0.00	0.00	0.00	0.00
8	DP-22A	DIST. PNL 22A (EPB1)	0.51	0.51	0.51	0.51	0.51	0.51	0.51	0.51	0.51	0.51	0.51	0.51	0.51	0.51
9	INV-EGA6	1KVA INVERTER EGA6	11.12	11.13	11.12	11.13	11.13	11.12	11.12	11.13	11.12	11.07	11.11	11.11	11.12	11.10
10	BUS 2A	480V SWGR 21 BUS 2A (NORMAL SUPPLY)	2.98	20.52	2.95	2.95	2.95	2.95	2.98	20.52	2.95	2.97	4.76	2.98	20.54	2.96
11	EDG-23-E	DSL GEN 23 (EMERG SUPPLY)	2.14	2.14	2.14	2.14	2.14	2.14	2.14	2.14	2.14	2.47	2.46	2.46	2.46	2.47
12	BUS 6A	480V SWGR 22 BUS 6A (EMERG. SUPPLY)	4.96	22.55	4.94	4.96	22.54	4.94	4.96	22.55	4.94	4.96	4.94	4.96	22.57	4.95
13	REG-INV-1	REGULATOR INVERTER 1	5.65	5.65	5.65	5.65	5.65	5.65	5.65	5.65	5.65	5.63	5.64	5.64	5.65	5.63
14	SWGR 22	5900V SWGR 22 CONTROL UF/UV	6.40	6.40	6.40	43.27	43.26	6.40	6.40	6.40	6.40	6.43	6.41	6.41	6.40	6.42
15	EXC-CTL	EXCITER CUBICLE	1.84	1.84	1.84	1.84	1.84	1.84	1.84	1.84	1.84	1.85	1.84	1.84	1.84	1.84
16	RTB-BYA	REACTOR TRIP SWGR RTB & BYA	0.07	0.07	0.07	0.07	0.07	0.07	0.07	0.07	0.07	0.07	0.07	0.07	0.07	0.07
17	DP-22	DIST. PNL 22 (PC4)	62.47	62.45	62.47	62.45	62.44	62.47	62.47	62.45	62.47	62.71	62.51	62.51	62.49	62.58
18	SI-SOV	SAFETY INJECTION VALVE SOVs	7.14	7.13	7.14	7.13	7.13	7.14	7.14	7.13	7.14	7.17	7.14	7.14	7.14	7.15
19	EDG-22-CTL	DSL GEN 22 CONTROL (EMERG. SUPPLY)	2.87	2.87	2.87	2.87	2.86	2.87	2.87	2.87	2.87	2.31	2.30	2.30	2.30	2.31
20	INV-PA	10KVA INVERTER PA	30.68	30.69	30.68	30.69	30.70	30.68	30.68	30.69	30.68	30.52	30.65	30.65	30.67	30.60
21	INV-22	10KVA INVERTER 22	55.49	55.52	55.49	55.52	55.53	55.49	55.49	55.52	55.49	55.21	55.45	55.45	55.47	55.36
22	WV8	BATTERY 22 JUNCTION BOX	0.00	0.00	0.00	0.00	0.00	0.00	0.00	0.00	0.00	0.00	0.00	0.00	0.00	0.00
23	EXK3	PP22-1 SPLICE BOX	0.00	0.00	0.00	0.00	0.00	0.00	0.00	0.00	0.00	0.00	0.00	0.00	0.00	0.00
24	EDD2	BUS 2A XFER SW	0.00	0.00	0.00	0.00	0.00	0.00	0.00	0.00	0.00	0.00	0.00	0.00	0.00	0.00
25	EDD7	EDG23 XFER SW	0.00	0.00	0.00	0.00	0.00	0.00	0.00	0.00	0.00	0.00	0.00	0.00	0.00	0.00
26	EDD1	BUS 6A XFER SW	0.00	0.00	0.00	0.00	0.00	0.00	0.00	0.00	0.00	0.00	0.00	0.00	0.00	0.00
27	EXW1	DP22-10 SPLICE BOX	0.00	0.00	0.00	0.00	0.00	0.00	0.00	0.00	0.00	0.00	0.00	0.00	0.00	0.00
28	EDD6	EDG 22 XFER SW	0.00	0.00	0.00	0.00	0.00	0.00	0.00	0.00	0.00	0.00	0.00	0.00	0.00	0.00
29	EDK12	DP22 SPLICE BOX	0.00	0.00	0.00	0.00	0.00	0.00	0.00	0.00	0.00	0.00	0.00	0.00	0.00	0.00

Node Currents

Generation Date: 03/06/2008 10:50 am

Battery: 22

Scenario: CMP22

Scenario Description: Battery 22 Composite Scenario

Continued from Page 3

Continued on Page 7

			Time Step:	15	16	17	18	19	20	21	22	23	24	25	26	27	28
			Time Step Range:	0:00:25.0 to 0:00:25.1	0:00:25.1 to 0:00:26.0	0:00:26.0 to 0:00:30.0	0:00:30.0 to 0:00:30.1	0:00:30.1 to 0:00:31.0	0:00:31.0 to 0:00:35.0	0:00:35.0 to 0:00:35.1	0:00:35.1 to 0:00:36.0	0:00:36.0 to 0:01:00.0	0:01:00.0 to 0:20:00.0	0:20:00.0 to 0:20:01.0	0:20:01.0 to 0:20:01.1	0:20:01.1 to 0:21:00.0	0:21:00.0 to 0:30:00.0
Node	Name	Description		Node Currents (ADC)	Node Currents (ADC)	Node Currents (ADC)	Node Currents (ADC)	Node Currents (ADC)	Node Currents (ADC)	Node Currents (ADC)	Node Currents (ADC)	Node Currents (ADC)	Node Currents (ADC)	Node Currents (ADC)	Node Currents (ADC)	Node Currents (ADC)	Node Currents (ADC)
30	EDK13	DP22A SPLICE BOX		0.00	0.00	0.00	0.00	0.00	0.00	0.00	0.00	0.00	0.00	0.00	0.00	0.00	0.00
31	EDA5	CKT BKR ENCL		0.00	0.00	0.00	0.00	0.00	0.00	0.00	0.00	0.00	0.00	0.00	0.00	0.00	0.00
32	EWD8	TERM BOX PAB EL 98		0.00	0.00	0.00	0.00	0.00	0.00	0.00	0.00	0.00	0.00	0.00	0.00	0.00	0.00
33	DA5-M	XFR SW - SAME AS DA5 - MODEL ONLY		0.00	0.00	0.00	0.00	0.00	0.00	0.00	0.00	0.00	0.00	0.00	0.00	0.00	0.00
34	H70	PENETRATION H70		0.00	0.00	0.00	0.00	0.00	0.00	0.00	0.00	0.00	0.00	0.00	0.00	0.00	0.00
35	WS6	SPLICE BOX		0.00	0.00	0.00	0.00	0.00	0.00	0.00	0.00	0.00	0.00	0.00	0.00	0.00	0.00

Node Currents

Generation Date: 03/06/2008 10:50 am

Battery: 22

Scenario: CMP22

Scenario Description: Battery 22 Composite Scenario

Continued from Page 4

Node	Name	Description	Node Currents (ADC)	Node Currents (ADC)	Node Currents (ADC)	Node Currents (ADC)	Node Currents (ADC)	Node Currents (ADC)	Node Currents (ADC)	Node Currents (ADC)	Node Currents (ADC)	Node Currents (ADC)	Node Currents (ADC)	Node Currents (ADC)	Node Currents (ADC)	Node Currents (ADC)
		Time Step:	29	30	31	32	33	34	35	36	37					
		Time Step Range:	0:30:00.0 to 1:00:00.0	1:00:00.0 to 1:30:00.0	1:30:00.0 to 1:59:00.0	1:59:00.0 to 1:59:00.1	1:59:00.1 to 1:59:01.0	1:59:01.0 to 1:59:01.1	1:59:01.1 to 1:59:02.0	1:59:02.0 to 1:59:02.1	1:59:02.1 to 2:00:00.0					
1	B-22	BATTERY 22	248.43	248.85	248.59	248.33	282.23	265.33	363.50	269.69	312.15					
2	PP-22	POWER PANEL 22 (PC2)	0.00	0.00	0.00	0.00	0.00	0.00	0.00	0.00	0.00					
3	BC-22	BATTERY CHARGER 22	0.00	0.00	0.00	0.00	0.00	0.00	0.00	0.00	0.00					
4	DP-22AA	DIST. PNL 22AA (EPF2)	3.01	3.00	2.98	2.93	2.93	2.93	2.92	2.93	2.92					
5	DA5 XFR SW	DA5 TRANSFER SWITCH	0.84	0.84	0.84	0.82	0.82	0.82	0.82	0.82	0.82					
6	PG5	EMERG LTG NO. 213 (PG5)	50.87	50.61	50.37	49.44	49.41	49.42	49.36	49.42	49.40					
7	PG9	EMERG LTG NO. 218 (PG9)	0.00	0.00	0.00	0.00	0.00	0.00	0.00	0.00	0.00					
8	DP-22A	DIST. PNL 22A (EPB1)	0.50	0.50	0.50	0.49	0.49	0.49	0.49	0.49	0.49					
9	INV-EGA6	1KVA INVERTER EGA6	11.20	11.26	11.32	11.54	11.54	11.54	11.56	11.54	11.55					
10	BUS 2A	480V SWGR 21 BUS 2A (NORMAL SUPPLY)	2.93	2.92	2.91	2.88	19.81	2.85	2.85	2.85	2.85					
11	EDG-23-E	DSL GEN 23 (EMERG SUPPLY)	2.44	2.25	2.24	2.20	2.19	2.20	2.19	2.19	2.19					
12	BUS 6A	480V SWGR 22 BUS 6A (EMERG. SUPPLY)	4.90	4.88	4.85	4.79	21.76	21.77	21.74	21.77	21.75					
13	REG-INV-1	REGULATOR INVERTER 1	5.69	5.72	5.75	5.87	5.87	5.87	5.88	5.87	5.87					
14	SWGR 22	6900V SWGR 22 CONTROL UF/UV	6.36	6.33	6.29	6.18	6.18	6.23	104.43	10.59	53.06					
15	EXC-CTL	EXCITER CUBICLE	1.82	1.82	1.81	1.77	1.77	1.77	1.77	1.77	1.77					
16	RTB-BYA	REACTOR TRIP SWGR RTB & BYA	0.07	0.07	0.07	0.07	0.07	0.07	0.07	0.07	0.07					
17	DP-22	DIST. PNL 22 (PC4)	62.18	61.95	61.73	60.92	60.91	60.92	60.86	60.91	60.89					
18	SI-SOV	SAFETY INJECTION VALVE SOVs	7.09	7.05	7.02	6.89	6.88	6.89	6.88	6.89	6.88					
19	EDG-22-CTL	DSL GEN 22 CONTROL (EMERG. SUPPLY)	1.74	2.45	2.26	2.22	2.22	2.23	2.22	2.22	2.22					
20	INV-PA	10KVA INVERTER PA	30.90	31.06	31.22	31.83	31.85	31.84	31.88	31.84	31.86					
21	INV-22	10KVA INVERTER 22	55.88	56.16	56.44	57.51	57.53	57.52	57.59	57.52	57.55					
22	WV8	BATTERY 22 JUNCTION BOX	0.00	0.00	0.00	0.00	0.00	0.00	0.00	0.00	0.00					
23	EXK3	PP22-1 SPLICE BOX	0.00	0.00	0.00	0.00	0.00	0.00	0.00	0.00	0.00					
24	EDD2	BUS 2A XFER SW	0.00	0.00	0.00	0.00	0.00	0.00	0.00	0.00	0.00					
25	EDD7	EDG23 XFER SW	0.00	0.00	0.00	0.00	0.00	0.00	0.00	0.00	0.00					
26	EDD1	BUS 6A XFER SW	0.00	0.00	0.00	0.00	0.00	0.00	0.00	0.00	0.00					
27	EXW1	DP22-10 SPLICE BOX	0.00	0.00	0.00	0.00	0.00	0.00	0.00	0.00	0.00					
28	EDD6	EDG 22 XFER SW	0.00	0.00	0.00	0.00	0.00	0.00	0.00	0.00	0.00					
29	EDK12	DP22 SPLICE BOX	0.00	0.00	0.00	0.00	0.00	0.00	0.00	0.00	0.00					

Node Currents

Generation Date: 03/06/2008 10:50 am

Battery: 22

Scenario: CMP22

Scenario Description: Battery 22 Composite Scenario

Continued from Page 5

		Time Step:	29	30	31	32	33	34	35	36	37					
		Time Step Range:	0:30:00.0 to 1:00:00.0	1:00:00.0 to 1:30:00.0	1:30:00.0 to 1:59:00.0	1:59:00.0 to 1:59:00.1	1:59:00.1 to 1:59:01.0	1:59:01.0 to 1:59:01.1	1:59:01.1 to 1:59:02.0	1:59:02.0 to 1:59:02.1	1:59:02.1 to 2:00:00.0					
Node	**Name**	**Description**	**Node Currents (ADC)**	**Node Currents (ADC)**	**Node Currents (ADC)**	**Node Currents (ADC)**	**Node Currents (ADC)**	**Node Currents (ADC)**	**Node Currents (ADC)**	**Node Currents (ADC)**	**Node Currents (ADC)**	**Node Currents (ADC)**	**Node Currents (ADC)**	**Node Currents (ADC)**	**Node Currents (ADC)**	**Node Currents (ADC)**
30	EDK13	DP22A SPLICE BOX	0.00	0.00	0.00	0.00	0.00	0.00	0.00	0.00	0.00					
31	EDA5	CKT BKR ENCL	0.00	0.00	0.00	0.00	0.00	0.00	0.00	0.00	0.00					
32	EWD8	TERM BOX PAB EL 98	0.00	0.00	0.00	0.00	0.00	0.00	0.00	0.00	0.00					
33	DA5-M	XFR SW - SAME AS DA5 - MODEL ONLY	0.00	0.00	0.00	0.00	0.00	0.00	0.00	0.00	0.00					
34	H70	PENETRATION H70	0.00	0.00	0.00	0.00	0.00	0.00	0.00	0.00	0.00					
35	WS6	SPLICE BOX	0.00	0.00	0.00	0.00	0.00	0.00	0.00	0.00	0.00					

Attachment G
Node Currents

Revised pages

By: Robert J Fletcher Date: 8/26/05
Check: [illegible] Date: 0-26-05

Node Currents

Generation Date: 08/23/2005 06:12 pm

Battery: 22

Scenario: CMP22

Scenario Description: Battery 22 Composite Scenario

Continued on Page 4

Node	Name	Description	Node Currents (ADC)	Node Currents (ADC)	Node Currents (ADC)	Node Currents (ADC)	Node Currents (ADC)	Node Currents (ADC)	Node Currents (ADC)	Node Currents (ADC)	Node Currents (ADC)	Node Currents (ADC)	Node Currents (ADC)	Node Currents (ADC)	Node Currents (ADC)	Node Currents (ADC)
Time Step:			1	2	3	4	5	6	7	8	9	10	11	12	13	14
Time Step Range:			0:00:00.0 to 0:00:01.0	0:00:01.0 to 0:00:01.1	0:00:01.1 to 0:00:02.0	0:00:02.0 to 0:00:03.0	0:00:03.0 to 0:00:03.1	0:00:03.1 to 0:00:04.0	0:00:04.0 to 0:00:05.0	0:00:05.0 to 0:00:10.0	0:00:10.0 to 0:00:10.1	0:00:10.1 to 0:00:11.0	0:00:11.0 to 0:00:13.0	0:00:13.0 to 0:00:13.1	0:00:13.1 to 0:00:14.0	0:00:14.0 to 0:00:25.0
1	B-22	BATTERY 22	225.40	196.66	283.31	198.33	198.36	216.15	198.33	187.41	187.43	215.40	187.41	187.43	205.23	187.41
2	PP-22	POWER PANEL 22 (PC2)	0.00	0.00	0.00	0.00	0.00	0.00	0.00	0.00	0.00	0.00	0.00	0.00	0.00	0.00
3	BC-22	BATTERY CHARGER 22	0.00	0.00	0.00	0.00	0.00	0.00	0.00	0.00	0.00	0.00	0.00	0.00	0.00	0.00
4	DP-22AA	DIST. PNL 22AA (EPF2)	3.07	3.07	3.07	3.07	3.07	3.07	3.07	3.07	3.07	3.07	3.07	3.07	3.07	3.07
5	DA5 XFR SW	DA5 TRANSFER SWITCH	0.87	0.87	0.87	0.87	0.87	0.87	0.87	0.87	0.87	0.87	0.87	0.87	0.87	0.87
6	PG5	EMERG LTG NO. 213 (PG5)	0.00	0.00	0.00	0.00	0.00	0.00	0.00	0.00	0.00	0.00	0.00	0.00	0.00	0.00
7	PG9	EMERG LTG NO. 218 (PG9)	0.00	0.00	0.00	0.00	0.00	0.00	0.00	0.00	0.00	0.00	0.00	0.00	0.00	0.00
8	DP-22A	DIST. PNL 22A (EPB1)	0.50	0.51	0.50	0.51	0.51	0.50	0.51	0.51	0.51	0.50	0.51	0.51	0.50	0.51
9	INV-EGA6	1KVA INVERTER EGA6	10.98	10.97	10.99	10.97	10.97	10.98	10.97	10.97	10.97	10.98	10.97	10.97	10.97	10.97
10	BUS 2A	480V SWGR 21 BUS 2A (NORMAL SUPPLY)	25.79	2.87	2.87	2.87	2.90	20.68	2.87	2.87	2.90	30.85	2.87	2.90	20.69	2.87
11	EDG-23-E	DSL GEN 23 (EMERG SUPPLY)	0.31	0.31	0.31	0.31	0.31	0.31	0.31	0.31	0.31	0.31	0.31	0.31	0.31	0.31
12	BUS 6A	480V SWGR 22 BUS 6A (EMERG. SUPPLY)	0.00	0.00	0.00	0.00	0.00	0.00	0.00	0.00	0.00	0.00	0.00	0.00	0.00	0.00
13	REG-INV-1	REGULATOR INVERTER 1	5.57	5.57	5.58	5.57	5.57	5.57	5.57	5.57	5.57	5.57	5.57	5.57	5.57	5.57
14	SWGR 22	6900V SWGR 22 CONTROL UF/UV	17.64	15.52	102.12	17.19	17.19	17.19	17.19	6.27	6.27	6.27	6.27	6.27	6.27	6.27
15	EXC-CTL	EXCITER CUBICLE	1.82	1.82	1.81	1.82	1.82	1.82	1.82	1.82	1.82	1.82	1.82	1.82	1.82	1.82
16	RTB-BYA	REACTOR TRIP SWGR RTB & BYA	3.76	0.07	0.07	0.07	0.07	0.07	0.07	0.07	0.07	0.07	0.07	0.07	0.07	0.07
17	DP-22	DIST. PNL 22 (PC4)	62.51	62.53	62.48	62.52	62.52	62.51	62.52	62.53	62.53	62.51	62.53	62.53	62.52	62.53
18	SI-SOV	SAFETY INJECTION VALVE SOVs	7.22	7.22	7.21	7.22	7.22	7.22	7.22	7.22	7.22	7.22	7.22	7.22	7.22	7.22
19	EDG-22-CTL	DSL GEN 22 CONTROL (EMERG. SUPPLY)	0.31	0.31	0.31	0.31	0.31	0.31	0.31	0.31	0.31	0.31	0.31	0.31	0.31	0.31
20	INV-PA	10KVA INVERTER PA	30.27	30.26	30.30	30.26	30.26	30.27	30.26	30.26	30.26	30.27	30.26	30.26	30.27	30.26
21	INV-22	10KVA INVERTER 22	54.76	54.76	54.83	54.76	54.76	54.77	54.76	54.75	54.75	54.77	54.75	54.75	54.76	54.75
22	WV8	BATTERY 22 JUNCTION BOX	0.00	0.00	0.00	0.00	0.00	0.00	0.00	0.00	0.00	0.00	0.00	0.00	0.00	0.00
23	EXK3	DP22-1 SPLICE BOX	0.00	0.00	0.00	0.00	0.00	0.00	0.00	0.00	0.00	0.00	0.00	0.00	0.00	0.00
24	EDD2	BUS 2A XFER SW	0.00	0.00	0.00	0.00	0.00	0.00	0.00	0.00	0.00	0.00	0.00	0.00	0.00	0.00
25	EDD7	EDG23 XFER SW	0.00	0.00	0.00	0.00	0.00	0.00	0.00	0.00	0.00	0.00	0.00	0.00	0.00	0.00
26	EDD1	BUS 6A XFER SW	0.00	0.00	0.00	0.00	0.00	0.00	0.00	0.00	0.00	0.00	0.00	0.00	0.00	0.00
27	EXW1	DP22-10 SPLICE BOX	0.00	0.00	0.00	0.00	0.00	0.00	0.00	0.00	0.00	0.00	0.00	0.00	0.00	0.00
28	EDD6	EDG 22 XFER SW	0.00	0.00	0.00	0.00	0.00	0.00	0.00	0.00	0.00	0.00	0.00	0.00	0.00	0.00
29	EDK12	DP22 SPLICE BOX	0.00	0.00	0.00	0.00	0.00	0.00	0.00	0.00	0.00	0.00	0.00	0.00	0.00	0.00

Node Currents

Generation Date: 08/23/2005 06:12 pm

Battery: 22

Scenario: CMP22

Scenario Description: Battery 22 Composite Scenario

Continued on Page 5

			Time Step: 1	2	3	4	5	6	7	8	9	10	11	12	13	14
			Time Step Range: 0:00:00.0 to 0:00:01.0	0:00:01.0 to 0:00:01.1	0:00:01.1 to 0:00:02.0	0:00:02.0 to 0:00:03.0	0:00:03.0 to 0:00:03.1	0:00:03.1 to 0:00:04.0	0:00:04.0 to 0:00:05.0	0:00:05.0 to 0:00:10.0	0:00:10.0 to 0:00:10.1	0:00:10.1 to 0:00:11.0	0:00:11.0 to 0:00:13.0	0:00:13.0 to 0:00:13.1	0:00:13.1 to 0:00:14.0	0:00:14.0 to 0:00:25.0
Node	**Name**	**Description**	**Node Currents (ADC)**	**Node Currents (ADC)**	**Node Currents (ADC)**	**Node Currents (ADC)**	**Node Currents (ADC)**	**Node Currents (ADC)**	**Node Currents (ADC)**	**Node Currents (ADC)**	**Node Currents (ADC)**	**Node Currents (ADC)**	**Node Currents (ADC)**	**Node Currents (ADC)**	**Node Currents (ADC)**	**Node Currents (ADC)**
30	EDK13	DP22A SPLICE BOX	0.00	0.00	0.00	0.00	0.00	0.00	0.00	0.00	0.00	0.00	0.00	0.00	0.00	0.00
31	EDA5	CKT BKR ENCL	0.00	0.00	0.00	0.00	0.00	0.00	0.00	0.00	0.00	0.00	0.00	0.00	0.00	0.00
32	EWD8	TERM BOX PAB EL 98	0.00	0.00	0.00	0.00	0.00	0.00	0.00	0.00	0.00	0.00	0.00	0.00	0.00	0.00
33	DA5-M	XFR SW - SAME AS DA5 - MODEL ONLY	0.00	0.00	0.00	0.00	0.00	0.00	0.00	0.00	0.00	0.00	0.00	0.00	0.00	0.00
34	H70	PENETRATION H70	0.00	0.00	0.00	0.00	0.00	0.00	0.00	0.00	0.00	0.00	0.00	0.00	0.00	0.00
35	WS6	SPLICE BOX	0.00	0.00	0.00	0.00	0.00	0.00	0.00	0.00	0.00	0.00	0.00	0.00	0.00	0.00

Node Currents

Generation Date: 08/23/2005 06:12 pm

Battery: 22

Scenario: CMP22

Scenario Description: Battery 22 Composite Scenario

Continued from Page 2

Continued on Page 6

Node	Name	Description	Node Currents (ADC)	Node Currents (ADC)	Node Currents (ADC)	Node Currents (ADC)	Node Currents (ADC)	Node Currents (ADC)	Node Currents (ADC)	Node Currents (ADC)	Node Currents (ADC)	Node Currents (ADC)	Node Currents (ADC)	Node Currents (ADC)	Node Currents (ADC)	Node Currents (ADC)
		Time Step:	15	16	17	18	19	20	21	22	23	24	25	26	27	28
		Time Step Range:	0:00:25.0 to 0:00:25.1	0:00:25.1 to 0:00:26.0	0:00:26.0 to 0:00:30.0	0:00:30.0 to 0:00:30.1	0:00:30.1 to 0:00:31.0	0:00:31.0 to 0:00:35.0	0:00:35.0 to 0:00:35.1	0:00:35.1 to 0:00:36.0	0:00:36.0 to 0:01:00.0	0:01:00.0 to 0:20:00.0	0:20:00.0 to 0:20:01.0	0:20:01.0 to 0:20:01.1	0:20:01.1 to 0:21:00.0	0:21:00.0 to 0:30:00.0
1	B-22	BATTERY 22	187.43	205.23	187.41	224.79	224.79	187.41	187.43	205.23	187.41	187.41	189.24	187.43	205.23	187.41
2	PP-22	POWER PANEL 22 (PC2)	0.00	0.00	0.00	0.00	0.00	0.00	0.00	0.00	0.00	0.00	0.00	0.00	0.00	0.00
3	BC-22	BATTERY CHARGER 22	0.00	0.00	0.00	0.00	0.00	0.00	0.00	0.00	0.00	0.00	0.00	0.00	0.00	0.00
4	DP-22AA	DIST. PNL 22AA (EPF2)	3.07	3.07	3.07	3.07	3.07	3.07	3.07	3.07	3.07	3.07	3.07	3.07	3.07	3.07
5	DA5 XFR SW	DA5 TRANSFER SWITCH	0.87	0.87	0.87	0.87	0.87	0.87	0.87	0.87	0.87	0.87	0.87	0.87	0.87	0.87
6	PG5	EMERG LTG NO. 213 (PG5)	0.00	0.00	0.00	0.00	0.00	0.00	0.00	0.00	0.00	0.00	0.00	0.00	0.00	0.00
7	PG9	EMERG LTG NO. 218 (PG9)	0.00	0.00	0.00	0.00	0.00	0.00	0.00	0.00	0.00	0.00	0.00	0.00	0.00	0.00
8	DP-22A	DIST. PNL 22A (EPB1)	0.51	0.50	0.51	0.50	0.50	0.51	0.51	0.50	0.51	0.51	0.51	0.51	0.50	0.51
9	INV-EGA6	1KVA INVERTER EGA6	10.97	10.97	10.97	10.98	10.98	10.97	10.97	10.97	10.97	10.97	10.97	10.97	10.97	10.97
10	BUS 2A	480V SWGR 21 BUS 2A (NORMAL SUPPLY)	2.90	20.69	2.87	2.87	2.87	2.87	2.90	20.69	2.87	2.87	4.70	2.90	20.69	2.87
11	EDG-23-E	DSL GEN 23 (EMERG SUPPLY)	0.31	0.31	0.31	0.31	0.31	0.31	0.31	0.31	0.31	0.31	0.31	0.31	0.31	0.31
12	BUS 6A	480V SWGR 22 BUS 6A (EMERG. SUPPLY)	0.00	0.00	0.00	0.00	0.00	0.00	0.00	0.00	0.00	0.00	0.00	0.00	0.00	0.00
13	REG-INV-1	REGULATOR INVERTER 1	5.57	5.57	5.57	5.57	5.57	5.57	5.57	5.57	5.57	5.57	5.57	5.57	5.57	5.57
14	SWGR 22	3900V SWGR 22 CONTROL UF/UV	6.27	6.27	6.27	43.64	43.64	6.27	6.27	6.27	6.27	6.27	6.27	6.27	6.27	6.27
15	EXC-CTL	EXCITER CUBICLE	1.82	1.82	1.82	1.82	1.82	1.82	1.82	1.82	1.82	1.82	1.82	1.82	1.82	1.82
16	RTB-BYA	REACTOR TRIP SWGR RTB & BYA	0.07	0.07	0.07	0.07	0.07	0.07	0.07	0.07	0.07	0.07	0.07	0.07	0.07	0.07
17	DP-22	DIST. PNL 22 (PC4)	62.53	62.52	62.53	62.51	62.51	62.53	62.53	62.52	62.53	62.53	62.53	62.53	62.53	62.53
18	SI-SOV	SAFETY INJECTION VALVE SOVs	7.22	7.22	7.22	7.22	7.22	7.22	7.22	7.22	7.22	7.22	7.22	7.22	7.22	7.22
19	EDG-22-CTL	DSL GEN 22 CONTROL (EMERG. SUPPLY)	0.31	0.31	0.31	0.31	0.31	0.31	0.31	0.31	0.31	0.31	0.31	0.31	0.31	0.31
20	INV-PA	10KVA INVERTER PA	30.26	30.27	30.26	30.27	30.27	30.26	30.26	30.27	30.26	30.26	30.26	30.26	30.27	30.26
21	INV-22	10KVA INVERTER 22	54.75	54.76	54.75	54.76	54.76	54.75	54.75	54.76	54.75	54.75	54.75	54.75	54.76	54.75
22	WV8	BATTERY 22 JUNCTION BOX	0.00	0.00	0.00	0.00	0.00	0.00	0.00	0.00	0.00	0.00	0.00	0.00	0.00	0.00
23	EXK3	PP22-1 SPLICE BOX	0.00	0.00	0.00	0.00	0.00	0.00	0.00	0.00	0.00	0.00	0.00	0.00	0.00	0.00
24	EDD2	BUS 2A XFER SW	0.00	0.00	0.00	0.00	0.00	0.00	0.00	0.00	0.00	0.00	0.00	0.00	0.00	0.00
25	EDD7	EDG23 XFER SW	0.00	0.00	0.00	0.00	0.00	0.00	0.00	0.00	0.00	0.00	0.00	0.00	0.00	0.00
26	EDD1	BUS 6A XFER SW	0.00	0.00	0.00	0.00	0.00	0.00	0.00	0.00	0.00	0.00	0.00	0.00	0.00	0.00
27	EXW1	DP22-10 SPLICE BOX	0.00	0.00	0.00	0.00	0.00	0.00	0.00	0.00	0.00	0.00	0.00	0.00	0.00	0.00
28	EDD6	EDG 22 XFER SW	0.00	0.00	0.00	0.00	0.00	0.00	0.00	0.00	0.00	0.00	0.00	0.00	0.00	0.00
29	EDK12	DP22 SPLICE BOX	0.00	0.00	0.00	0.00	0.00	0.00	0.00	0.00	0.00	0.00	0.00	0.00	0.00	0.00

Node Currents

Generation Date: 08/23/2005 06:12 pm

Battery: 22

Scenario: CMP22

Scenario Description: Battery 22 Composite Scenario

Continued from Page 3

Continued on Page 7

			Time Step:	15	16	17	18	19	20	21	22	23	24	25	26	27	28
			Time Step Range:	0:00:25.0 to 0:00:25.1	0:00:25.1 to 0:00:26.0	0:00:26.0 to 0:00:30.0	0:00:30.0 to 0:00:30.1	0:00:30.1 to 0:00:31.0	0:00:31.0 to 0:00:35.0	0:00:35.0 to 0:00:35.1	0:00:35.1 to 0:00:36.0	0:00:36.0 to 0:01:00.0	0:01:00.0 to 0:20:00.0	0:20:00.0 to 0:20:01.0	0:20:01.0 to 0:20:01.1	0:20:01.1 to 0:21:00.0	0:21:00.0 to 0:30:00.0
Node	Name	Description		Node Currents (ADC)	Node Currents (ADC)	Node Currents (ADC)	Node Currents (ADC)	Node Currents (ADC)	Node Currents (ADC)	Node Currents (ADC)	Node Currents (ADC)	Node Currents (ADC)	Node Currents (ADC)	Node Currents (ADC)	Node Currents (ADC)	Node Currents (ADC)	Node Currents (ADC)
30	EDK13	DP22A SPLICE BOX		0.00	0.00	0.00	0.00	0.00	0.00	0.00	0.00	0.00	0.00	0.00	0.00	0.00	0.00
31	EDA5	CKT BKR ENCL		0.00	0.00	0.00	0.00	0.00	0.00	0.00	0.00	0.00	0.00	0.00	0.00	0.00	0.00
32	EWD8	TERM BOX PAB EL 98		0.00	0.00	0.00	0.00	0.00	0.00	0.00	0.00	0.00	0.00	0.00	0.00	0.00	0.00
33	DA5-M	XFR SW - SAME AS DA5 - MODEL ONLY		0.00	0.00	0.00	0.00	0.00	0.00	0.00	0.00	0.00	0.00	0.00	0.00	0.00	0.00
34	H70	PENETRATION H70		0.00	0.00	0.00	0.00	0.00	0.00	0.00	0.00	0.00	0.00	0.00	0.00	0.00	0.00
35	WS6	SPLICE BOX		0.00	0.00	0.00	0.00	0.00	0.00	0.00	0.00	0.00	0.00	0.00	0.00	0.00	0.00

Node Currents

Generation Date: 08/23/2005 06:12 pm

Battery: 22

Scenario: CMP22

Scenario Description: Battery 22 Composite Scenario

Continued from Page 4

Node	Name	Description	Node Currents (ADC)	Node Currents (ADC)	Node Currents (ADC)	Node Currents (ADC)	Node Currents (ADC)	Node Currents (ADC)	Node Currents (ADC)	Node Currents (ADC)	Node Currents (ADC)	Node Currents (ADC)	Node Currents (ADC)	Node Currents (ADC)	Node Currents (ADC)	Node Currents (ADC)
		Time Step:	29	30	31	32	33	34	35	36	37					
		Time Step Range:	0:30:00.0 to 1:00:00.0	1:00:00.0 to 1:30:00.0	1:30:00.0 to 1:59:00.0	1:59:00.0 to 1:59:00.1	1:59:00.1 to 1:59:01.0	1:59:01.0 to 1:59:01.1	1:59:01.1 to 1:59:02.0	1:59:02.0 to 1:59:02.1	1:59:02.1 to 2:00:00.0					
1	B-22	BATTERY 22	187.71	187.82	187.90	188.42	205.76	188.49	288.98	192.92	236.39					
2	PP-22	POWER PANEL 22 (PC2)	0.00	0.00	0.00	0.00	0.00	0.00	0.00	0.00	0.00					
3	BC-22	BATTERY CHARGER 22	0.00	0.00	0.00	0.00	0.00	0.00	0.00	0.00	0.00					
4	DP-22AA	DIST. PNL 22AA (EPF2)	3.05	3.04	3.03	2.99	2.99	2.99	2.99	2.99	2.99					
5	DA5 XFR SW	DA5 TRANSFER SWITCH	0.87	0.87	0.86	0.85	0.85	0.85	0.85	0.85	0.85					
6	PG5	EMERG LTG NO. 213 (PG5)	0.00	0.00	0.00	0.00	0.00	0.00	0.00	0.00	0.00					
7	PG9	EMERG LTG NO. 218 (PG9)	0.00	0.00	0.00	0.00	0.00	0.00	0.00	0.00	0.00					
8	DP-22A	DIST. PNL 22A (EPB1)	0.50	0.50	0.50	0.49	0.49	0.49	0.49	0.49	0.49					
9	INV-EGA6	1KVA INVERTER EGA6	11.07	11.10	11.13	11.27	11.28	11.27	11.29	11.27	11.28					
10	BUS 2A	480V SWGR 21 BUS 2A (NORMAL SUPPLY)	2.85	2.84	2.84	2.83	20.15	2.80	2.80	2.80	2.80					
11	EDG-23-E	DSL GEN 23 (EMERG SUPPLY)	0.31	0.31	0.31	0.31	0.31	0.31	0.31	0.31	0.31					
12	BUS 6A	480V SWGR 22 BUS 6A (EMERG. SUPPLY)	0.00	0.00	0.00	0.00	0.00	0.00	0.00	0.00	0.00					
13	REG-INV-1	REGULATOR INVERTER 1	5.62	5.64	5.65	5.73	5.73	5.73	5.74	5.73	5.73					
14	SWGR 22	6900V SWGR 22 CONTROL UF/UV	6.22	6.20	6.18	6.11	6.10	6.16	106.63	10.52	54.07					
15	EXC-CTL	EXCITER CUBICLE	1.80	1.80	1.79	1.77	1.77	1.77	1.77	1.77	1.77					
16	RTB-BYA	REACTOR TRIP SWGR RTB & BYA	0.07	0.07	0.07	0.07	0.07	0.07	0.07	0.07	0.07					
17	DP-22	DIST. PNL 22 (PC4)	62.15	62.02	61.92	61.36	61.35	61.36	61.31	61.36	61.34					
18	SI-SOV	SAFETY INJECTION VALVE SOVs	7.16	7.14	7.12	7.03	7.03	7.03	7.02	7.03	7.03					
19	EDG-22-CTL	DSL GEN 22 CONTROL (EMERG. SUPPLY)	0.31	0.31	0.30	0.30	0.30	0.30	0.30	0.30	0.30					
20	INV-PA	10KVA INVERTER PA	30.52	30.62	30.69	31.10	31.10	31.10	31.14	31.10	31.12					
21	INV-22	10KVA INVERTER 22	55.21	55.38	55.51	56.22	56.23	56.22	56.29	56.22	56.25					
22	WV8	BATTERY 22 JUNCTION BOX	0.00	0.00	0.00	0.00	0.00	0.00	0.00	0.00	0.00					
23	EXK3	PP22-1 SPLICE BOX	0.00	0.00	0.00	0.00	0.00	0.00	0.00	0.00	0.00					
24	EDD2	BUS 2A XFER SW	0.00	0.00	0.00	0.00	0.00	0.00	0.00	0.00	0.00					
25	EDD7	EDG23 XFER SW	0.00	0.00	0.00	0.00	0.00	0.00	0.00	0.00	0.00					
26	EDD1	BUS 6A XFER SW	0.00	0.00	0.00	0.00	0.00	0.00	0.00	0.00	0.00					
27	EXW1	DP22-10 SPLICE BOX	0.00	0.00	0.00	0.00	0.00	0.00	0.00	0.00	0.00					
28	EDD6	EDG 22 XFER SW	0.00	0.00	0.00	0.00	0.00	0.00	0.00	0.00	0.00					
29	EDK12	DP22 SPLICE BOX	0.00	0.00	0.00	0.00	0.00	0.00	0.00	0.00	0.00					

Node Currents

Generation Date: 08/23/2005 06:12 pm

Battery: 22

Scenario: CMP22

Scenario Description: Battery 22 Composite Scenario

Continued from Page 5

			Time Step:	29	30	31	32	33	34	35	36	37					
			Time Step Range:	0:30:00.0 to 1:00:00.0	1:00:00.0 to 1:30:00.0	1:30:00.0 to 1:59:00.0	1:59:00.0 to 1:59:00.1	1:59:00.1 to 1:59:01.0	1:59:01.0 to 1:59:01.1	1:59:01.1 to 1:59:02.0	1:59:02.0 to 1:59:02.1	1:59:02.1 to 2:00:00.0					
Node	Name	Description		Node Currents (ADC)	Node Currents (ADC)	Node Currents (ADC)	Node Currents (ADC)	Node Currents (ADC)	Node Currents (ADC)	Node Currents (ADC)	Node Currents (ADC)	Node Currents (ADC)	Node Currents (ADC)	Node Currents (ADC)	Node Currents (ADC)	Node Currents (ADC)	Node Currents (ADC)
30	EDK13	DP22A SPLICE BOX		0.00	0.00	0.00	0.00	0.00	0.00	0.00	0.00	0.00					
31	EDA5	CKT BKR ENCL		0.00	0.00	0.00	0.00	0.00	0.00	0.00	0.00	0.00					
32	EWD8	TERM BOX PAB EL 98		0.00	0.00	0.00	0.00	0.00	0.00	0.00	0.00	0.00					
33	DA5-M	XFR SW - SAME AS DA5 - MODEL ONLY		0.00	0.00	0.00	0.00	0.00	0.00	0.00	0.00	0.00					
34	H70	PENETRATION H70		0.00	0.00	0.00	0.00	0.00	0.00	0.00	0.00	0.00					
35	WS6	SPLICE BOX		0.00	0.00	0.00	0.00	0.00	0.00	0.00	0.00	0.00					

Attachment H
Battery Sizing Results

Appendix revised
to account for
Transfer Switch loading

By: H Robinson Date: _____
Check: _____ Date: _____

Battery Sizing Results

Generation Date: 03/06/2008 10:51 am

Battery: 22

Scenario ID	Description	Required Plates	Actual Plates	Margin	Comments
CMP22	Battery 22 Composite Scenario	9.74	11	12.94%	

Battery Data:

Minimum Electrolyte Temperature (degF):	59
Cell Manufacturer:	EXIDE
Cell Type:	GN 23
Battery Float Voltage:	135.5
Battery Nominal Voltage:	125
Battery Minimum Volts per Cell:	1.88448275862069
Number of Cells:	58
1 minute Rating (ADC):	127.93
Design Margin:	1
Aging Factor:	1.176

Attachment H
Battery Sizing Results

Revised pages

By: Robert J Hetteler Date: 8/26/05
Check: [illegible] Date: 8-26-05

Battery Sizing Results

Generation Date: 08/23/2005 08:19 pm

Battery: 22

Scenario ID	Description	Required Plates	Actual Plates	Margin	Comments
CMP22	Battery 22 Composite Scenario	7.00	11	57.14%	

Battery Data:

Minimum Electrolyte Temperature (degF):	60
Cell Manufacturer:	EXIDE
Cell Type:	GN 23
Battery Float Voltage:	130.5
Battery Nominal Voltage:	125
Battery Minimum Volts per Cell:	1.881034482758621
Number of Cells:	58
1 minute Rating (ADC):	127.93
Design Margin:	1
Aging Factor:	1.11

Attachment I
Short Circuit Results

By: Robert J. Letteter Date: 8/26/05
Check: [illegible] Date: 8-26-05

Short Circuit Results

Generation Date: 08/23/2005 06:01 pm

Battery: 22

Node	Name	Description	Node Rating (Amps)	Short Circuit Amps
1	B-22	BATTERY 22	0.	18926.
2	PP-22	POWER PANEL 22 (PC2)	20000.	16943.
3	BC-22	BATTERY CHARGER 22	0.	11383.
4	DP-22AA	DIST. PNL 22AA (EPF2)	10000.	2812.
5	DA5 XFR SW	DA5 TRANSFER SWITCH	0.	3890.
6	PG5	EMERG LTG NO. 213 (PG5)	0.	3081.
7	PG9	EMERG LTG NO. 218 (PG9)	0.	756.
8	DP-22A	DIST. PNL 22A (EPB1)	10000.	3321.
9	INV-EGA6	1KVA INVERTER EGA6	0.	983.
10	BUS 2A	480V SWGR 21 BUS 2A (NORMAL SUPPLY)	0.	846.
11	EDG-23-E	DSL GEN 23 (EMERG SUPPLY)	0.	344.
12	BUS 6A	480V SWGR 22 BUS 6A (EMERG. SUPPLY)	0.	1044.
13	REG-INV-1	REGULATOR INVERTER 1	0.	268.
14	SWGR 22	6900V SWGR 22 CONTROL UF/UV	0.	2306.
15	EXC-CTL	EXCITER CUBICLE	0.	383.
16	RTB-BYA	REACTOR TRIP SWGR RTB & BYA	0.	1387.
17	DP-22	DIST. PNL 22 (PC4)	10000.	4390.
18	SI-SOV	SAFETY INJECTION VALVE SOVs	0.	577.
19	EDG-22-CTL	DSL GEN 22 CONTROL (EMERG. SUPPLY)	0.	372.
20	INV-PA	10KVA INVERTER PA	0.	1941.
21	INV-22	10KVA INVERTER 22	0.	9730.
22	WV8	BATTERY 22 JUNCTION BOX	0.	17635.
23	EXK3	PP22-1 SPLICE BOX	0.	12044.
24	EDD2	BUS 2A XFER SW	0.	1238.
25	EDD7	EDG23 XFER SW	0.	373.
26	EDD1	BUS 6A XFER SW	0.	1715.
27	EXW1	DP22-10 SPLICE BOX	0.	583.
28	EDD6	EDG 22 XFER SW	0.	406.
29	EDK12	DP22 SPLICE BOX	0.	9172.
30	EDK13	DP22A SPLICE BOX	0.	9172.
31	EDA5	CKT BKR ENCL	0.	1783.
32	EWD8	TERM BOX PAB EL 98	0.	1608.
33	DA5-M	XFR SW - SAME AS DA5 - MODEL ONLY	0.	1080.
34	H70	PENETRATION H70	0.	916.
35	WS6	SPLICE BOX	0.	889.