3.0 LIMITING CONDITION FOR OPERATION (LCO) APPLICABILITY

LCO 3.0.1 LCOs shall be met during the MODES or other specified conditions in the Applicability, except as provided in LCO 3.0.2 and LCO 3.0.7.

LCO 3.0.2 Upon discovery of a failure to meet an LCO, the Required Actions of the associated Conditions shall be met, except as provided in LCO 3.0.5 and LCO 3.0.6.

If the LCO is met or is no longer applicable prior to expiration of the specified Completion Time(s), completion of the Required Action(s) is not required, unless otherwise stated.

LCO 3.0.3 When an LCO is not met and the associated ACTIONS are not met, an associated ACTION is not provided, or if directed by the associated ACTIONS, the unit shall be placed in a MODE or other specified condition in which the LCO is not applicable. Action shall be initiated within 1 hour to place the unit, as applicable, in:

a. MODE 2 within 7 hours;

b. MODE 3 within 13 hours; and

c. MODE 4 within 37 hours.

Exceptions to this Specification are stated in the individual Specifications.

Where corrective measures are completed that permit operation in accordance with the LCO or ACTIONS, completion of the actions required by LCO 3.0.3 is not required.

LCO 3.0.3 is only applicable in MODES 1, 2, and 3.

LCO 3.0.4 When an LCO is not met, entry into a MODE or other specified condition in the Applicability shall not be made except when the associated ACTIONS to be entered permit continued operation in the MODE or other specified condition in the Applicability for an unlimited period of time. This Specification shall not prevent changes in MODES or other specified conditions in the Applicability that are required to comply with ACTIONS.

LCO APPLICABILITY

LCO 3.0.4 (continued)	Exceptions to this Specification are stated in the individual Specifications. These exceptions allow entry into MODES or other specified conditions in the Applicability when the associated ACTIONS to be entered allow unit operation in the MODE or other specified condition in the Applicability only for a limited period of time.
LCO 3.0.5	Equipment removed from service or declared inoperable to comply with ACTIONS may be returned to service under administrative control solely to perform testing required to demonstrate its OPERABILITY, or the OPERABILITY of other equipment. This is an exception to LCO 3.0.2 for the system returned to service under administrative control to perform the testing required to demonstrate OPERABILITY.
LCO 3.0.6	When a supported system LCO is not met solely due to a support system LCO not being met, the Conditions and Required Actions associated with this supported system are not required to be entered. Only the support system LCO ACTIONS are required to be entered. This is an exception to LCO 3.0.2 for the supported system. In this event, additional evaluations and limitations may be required in accordance with Specification 5.6, “Safety Function Determination Program (SFDP).” If a loss of safety function is determined to exist by this program, the appropriate Conditions and Required Actions of the LCO in which the loss of safety function exists are required to be entered. When a support system’s Required Action directs a supported system to be declared inoperable or directs entry into Conditions and Required Actions for a supported system, the applicable Conditions and Required Actions shall be entered in accordance with LCO 3.0.2.
LCO 3.0.7	Special Operations LCOs in Section 3.10 allow specified Technical Specifications (TS) requirements to be changed to permit performance of special tests and operations. Unless otherwise specified, all other TS requirements remain unchanged. Compliance with Special Operations LCOs is optional. When a Special Operations LCO is desired to be met but is not met, the ACTIONS of the Special Operations LCO shall be met. When a Special Operations LCO is not desired to be met, entry into a MODE or other specified condition in the Applicability shall only be made in accordance with the other applicable Specifications.

3.0 SURVEILLANCE REQUIREMENT (SR) APPLICABILITY

SR 3.0.1

SRs shall be met during the MODES or other specified conditions in the Applicability for individual LCOs, unless otherwise stated in the SR. Failure to meet a Surveillance, whether such failure is experienced during the performance of the Surveillance or between performances of the Surveillance, shall be failure to meet the LCO. Failure to perform a Surveillance within the specified Frequency shall be failure to meet the LCO except as provided in SR 3.0.3. Surveillances do not have to be performed on inoperable equipment or variables outside specified limits.

SR 3.0.2

The specified Frequency for each SR is met if the Surveillance is performed within 1.25 times the interval specified in the Frequency, as measured from the previous performance or as measured from the time a specified condition of the Frequency is met.

For Frequencies specified as “once,” the above interval extension does not apply.

If a Completion Time requires periodic performance on a “once per ... ” basis, the above Frequency extension applies to each performance after the initial performance.

Exceptions to this Specification are stated in the individual Specifications.

SR 3.0.3

If it is discovered that a Surveillance was not performed within its specified Frequency, then compliance with the requirement to declare the LCO not met may be delayed, from the time of discovery, up to 24 hours or up to the limit of the specified Frequency, whichever is less. This delay period is permitted to allow performance of the Surveillance.

If the Surveillance is not performed within the delay period, the LCO must immediately be declared not met, and the applicable Condition(s) must be entered.

When the Surveillance is performed within the delay period and the Surveillance is not met, the LCO must immediately be declared not met, and the applicable Condition(s) must be entered.

3.0 SR APPLICABILITY

SR 3.0.4 Entry into a MODE or other specified condition in the Applicability of an LCO shall not be made unless the LCO's Surveillances have been met within their specified Frequency. This provision shall not prevent entry into MODES or other specified conditions in the Applicability that are required to comply with ACTIONS.

3.1 REACTIVITY CONTROL SYSTEMS

3.1.1 SHUTDOWN MARGIN (SDM)

LCO 3.1.1 SDM shall be:

a. ≥ 0.38% Δk/k, with the highest worth control rod or rod pair analytically determined; or

b. ≥ 0.28% Δk/k, with the highest worth control rod or rod pair determined by test.

APPLICABILITY: MODES 1, 2, 3, 4, and 5.

ACTIONS

CONDITION	REQUIRED ACTION	COMPLETION TIME
A. SDM not within limits in MODE 1 or 2.	A.1 Restore SDM to within limits.	6 hours
B. Required Action and associated Completion Time of Condition A not met.	B.1 Be in MODE 3.	12 hours
C. SDM not within limits in MODE 3.	C.1 Initiate action to fully insert all insertable control rods.	Immediately
D. SDM not within limits in MODE 4.	D.1 Initiate action to fully insert all insertable control rods. AND D.2 Initiate action to restore secondary containment to OPERABLE status.	Immediately 1 hour

(continued)

ACTIONS (continued)

CONDITION	REQUIRED ACTION		COMPLETION TIME
D. (continued)	AND		
	D.3	Initiate action to restore one standby gas treatment (SGT) subsystem to OPERABLE status.	1 hour
	AND		
	D.4	Initiate action to restore one isolation valve and associated instrumentation to OPERABLE status in each required secondary containment penetration flow path not isolated.	1 hour
E. SDM not within limits in MODE 5.	E.1	Suspend CORE ALTERATIONS except for control rod insertion and fuel assembly removal.	Immediately
	AND		
	E.2	Initiate action to fully insert all insertable control rods in core cells containing one or more fuel assemblies.	Immediately
	AND		
	E.3	Initiate action to restore secondary containment to OPERABLE status.	1 hour
	AND		

(continued)

ACTIONS (continued)

CONDITION	REQUIRED ACTION	COMPLETION TIME
E. (continued)	E.4 Initiate action to restore one SGT subsystem to OPERABLE status.	1 hour
	AND	
	E.5 Initiate action to restore one isolation valve and associated instrumentation to OPERABLE status in each required secondary containment penetration flow path not isolated.	1 hour

SURVEILLANCE REQUIREMENTS

SURVEILLANCE		FREQUENCY
SR 3.1.1.1	Verify SDM is: a. $\geq$ 0.38% Δk/k with the highest worth control rod or control rod pair analytically determined; or b. $\geq$ 0.28% Δk/k with the highest worth control rod or control rod pair determined by test.	Prior to each in vessel fuel movement during fuel loading sequence AND Once within 4 hours after criticality following fuel movement within the reactor pressure vessel or control rod replacement

3.1 REACTIVITY CONTROL SYSTEMS

3.1.2 Reactivity Anomalies

LCO 3.1.2 The reactivity difference between the monitored core k_{eff} and the predicted core k_{eff} shall be within ± 1% $\Delta k/k$.

APPLICABILITY: MODES 1 and 2.

ACTIONS

CONDITION	REQUIRED ACTION	COMPLETION TIME
A. Core reactivity difference not within limit.	A.1 Restore core reactivity difference to within limit.	72 hours
B. Required Action and associated Completion Time not met.	B.1 Be in MODE 3.	12 hours

SURVEILLANCE REQUIREMENTS

SURVEILLANCE		FREQUENCY
SR 3.1.2.1	Verify core reactivity difference between the monitored core k_{eff} and the predicted core k_{eff} is within ± 1% $\Delta k/k$.	Once within 24 hours after reaching equilibrium conditions following startup after fuel movement within the reactor pressure vessel or control rod replacement AND 1000 MW • d/t thereafter during operations in MODE 1

3.1 REACTIVITY CONTROL SYSTEMS

3.1.3 Control Rod OPERABILITY

LCO 3.1.3 Each control rod shall be OPERABLE.

APPLICABILITY: MODES 1 and 2.

ACTIONS

----------NOTE----------
Separate Condition entry is allowed for each control rod.

CONDITION	REQUIRED ACTION	COMPLETION TIME
A. One withdrawn control rod stuck.	----------NOTE---------- A stuck rod may be bypassed in the Rod Action and Position Information (RAPI) Subsystem in accordance with SR 3.3.5.1.7 required to allow continued operation. ---------- A.1 Disarm the associated control rod drive (CRD). <u>AND</u> A.2 ----------NOTE---------- Not applicable when less than or equal to the low power setpoint (LPSP) of the Rod Control and Information System (RCIS). ----------	2 hours

(continued)

ACTIONS (continued)

CONDITION	REQUIRED ACTION	COMPLETION TIME
A. (continued)	Perform SR 3.1.3.2 and SR 3.1.3.3 for each withdrawn OPERABLE control rod.	24 hours
	AND	
	A.3 Perform SR 3.1.1.1.	72 hours
B. Two or more withdrawn control rods stuck.	B.1 Disarm the associated CRD.	2 hour
	AND	
	B.2 Be in MODE 3.	12 hours
C. One or more control rods inoperable for reasons other than Condition A or B.	----------NOTE---------- 1. Inoperable control rods may be bypassed in the RAPI Subsystem in accordance with SR 3.3.5.1.7, if required, to allow insertion of inoperable control rod and continued operation. 2. Inoperable control rods with failed motor drives can only be fully inserted by individual scram. ----------	
	C.1 Fully insert inoperable control rod	3 hours
	AND	
	C.2 Disarm the associated CRD.	4 hours

(continued)

ACTIONS (continued)

CONDITION	REQUIRED ACTION	COMPLETION TIME
D. ----------NOTE---------- Not applicable when THERMAL POWER > 10% RTP. ---------- Two or more inoperable control rods not in compliance with Ganged Withdrawal Sequence Restrictions (GWSR) and not separated by two or more OPERABLE control rods.	D.1 Restore compliance with GWSR. OR D.2 Restore control rod to OPERABLE status.	4 hours 4 hours
E. Required Action and associated Completion Time of Condition A, C, or D not met. OR Nine or more control rods inoperable.	E.1 Be in MODE 3.	12 hours

SURVEILLANCE REQUIREMENTS

SURVEILLANCE		FREQUENCY
SR 3.1.3.1	Determine the position of each control rod.	24 hours
SR 3.1.3.2	----------NOTE---------- Not required to be performed until 7 days after the control rod is withdrawn and THERMAL POWER is greater than the LPSP of the RCIS. ---------- Insert each fully withdrawn control rod two notches.	7 days
SR 3.1.3.3	----------NOTE---------- Not required to be performed until 31 days after the control rod is withdrawn and THERMAL POWER is greater than the LPSP of the RCIS. ---------- Insert each partially withdrawn control rod two notches.	31 days
SR 3.1.3.4	Verify each control rod scram time from fully withdrawn to 60% rod insertion position is ≤ 1.44 seconds.	In accordance with SR 3.1.4.1, SR 3.1.4.2, SR 3.1.4.3, and SR 3.1.4.4
SR 3.1.3.5	Verify each control rod does not go to the withdrawn overtravel position.	Prior to declaring control rod OPERABLE after work on control rod or CRD System that could affect coupling <u>AND</u> Once the first time the control rod is withdrawn to “full out” position after the associated orificed fuel support has been moved

3.1 REACTIVITY CONTROL SYSTEMS

3.1.4 Control Rod Scram Times

LCO 3.1.4

a. No more than 8 OPERABLE control rods shall be “slow,” in accordance with Table 3.1.4-1; and

b. No more than 2 OPERABLE control rods that are “slow” shall occupy adjacent locations.

APPLICABILITY: MODES 1 and 2.

ACTIONS

CONDITION	REQUIRED ACTION	COMPLETION TIME
A. Requirements of the LCO not met.	A.1 Be in MODE 3.	12 hours

SURVEILLANCE REQUIREMENTS

----------NOTE----------

During single or pair control rod scram time Surveillances, the control rod drive (CRD) pumps shall be isolated from the associated scram accumulator.

SURVEILLANCE		FREQUENCY
SR 3.1.4.1	Verify each control rod scram time is within the limits of Table 3.1.4-1 with reactor steam dome pressure ≥ 6.55 MPaG.	Prior to exceeding 40% RTP after fuel movement within the reactor pressure vessel AND Prior to exceeding 40% RTP after each reactor shutdown ≥ 120 days
SR 3.1.4.2	Verify, for a representative sample, each tested control rod scram time is within the limits of Table 3.1.4-1 with reactor steam dome pressure ≥ 6.55 MPaG.	120 days cumulative operation in MODE 1
SR 3.1.4.3	Verify each affected control rod scram time is within the limits of Table 3.1.4-1.	Prior to declaring control rod OPERABLE after work on control rod or CRD System that could affect scram time
SR 3.1.4.4	Verify each affected control rod scram time is within the limits of Table 3.1.4-1 with reactor steam dome pressure ≥ 6.55 MPaG.	Prior to exceeding 40% RTP after work on control rod or CRD System that could affect scram time

Table 3.1.4-1
Control Rod Scram Times

----------NOTES----------

1. OPERABLE control rods with scram times not within the limits of this Table are considered "slow."

2. Enter applicable Conditions and Required Actions of LCO 3.1.3, "Control Rod Operability," for control rods with scram times > 1.44 seconds to 60% rod insertion position. These control rods are inoperable, in accordance with SR 3.1.3.4, and are not considered "slow."

ROD POSITION PERCENT INSERTION (%)	SCRAM TIMES[a] (seconds)		
	REACTOR STEAM DOME PRESSURE[b] 0 MPaG	REACTOR STEAM DOME PRESSURE[b] 6.55 MPaG	REACTOR STEAM DOME PRESSURE[b] 7.24 MPaG
10	(c)	0.42	0.42
40	(c)	1.00	1.00
60		1.44	1.44

(a) Maximum scram time from fully withdrawn position, based on de-energization of scram pilot valve solenoids as time zero.

(b) For intermediate reactor steam dome pressures, the scram time criteria are determined by linear interpolation.

(c) For reactor steam dome pressure ≤ 6.55 MPaG, only 60% rod insertion position scram time limit applies.

3.1 REACTIVITY CONTROL SYSTEMS

3.1.5 Control Rod Scram Accumulators

LCO 3.1.5 Each control rod scram accumulator shall be OPERABLE.

APPLICABILITY: MODES 1 and 2.

ACTIONS

----------NOTE----------
Separate Condition entry is allowed for each control rod scram accumulator.

CONDITION	REQUIRED ACTION	COMPLETION TIME
A. One control rod scram accumulator inoperable.	A.1 Declare the associated control rod(s) inoperable.	8 hours
B. Two or more control rod scram accumulators inoperable.	B.1 Declare the associated control rod(s) inoperable.	1 hour
C. Required Action and associated Completion Time of Required Action A.1 or B.1 not met.	C.1 ----------NOTE---------- Not applicable if all inoperable control rod scram accumulators are associated with fully inserted control rods. ---------- Place the reactor mode switch in the shutdown position.	Immediately

SURVEILLANCE REQUIREMENTS

SURVEILLANCE		FREQUENCY
SR 3.1.5.1	Verify each control rod scram accumulator pressure is ≥ 12.75 MPaG.	7 days

3.1 REACTIVITY CONTROL SYSTEMS

3.1.6 Rod Pattern Control

LCO 3.1.6 OPERABLE control rods shall comply with the requirements of the Ganged Withdrawal Sequence Restrictions (GWSR).

APPLICABILITY: MODES 1 and 2 with THERMAL POWER ≤ 10% RTP.

ACTIONS

CONDITION	REQUIRED ACTION	COMPLETION TIME
A. One or more OPERABLE control rods not in compliance with GWSR.	A.1 ----------NOTE---------- Affected control rods may be bypassed in the Rod Action and Position Information (RAPI) Subsystem in accordance with SR 3.3.5.1.7. ---------- Move associated control rod(s) to correct position.	8 hours
	OR	
	A.2 Declare associated control rod(s) inoperable.	8 hours
B. Nine or more OPERABLE control rods not in compliance with GWSR.	B.1 ----------NOTE---------- Affected control rods may be bypassed in the RAPI Subsystem in accordance with SR 3.3.5.1.7 for insertion only. ---------- Suspend withdrawal of control rods.	Immediately
	AND	

(continued)

ACTIONS (continued)

CONDITION	REQUIRED ACTION	COMPLETION TIME
B. (continued)	B.2 Place the reactor mode switch in the Shutdown position.	1 hour

SURVEILLANCE REQUIREMENTS

SURVEILLANCE		FREQUENCY
SR 3.1.6.1	Verify all OPERABLE control rods comply with GWSR.	24 hours

3.1 REACTIVITY CONTROL SYSTEMS

3.1.7 Standby Liquid Control (SLC) System

LCO 3.1.7 Two SLC subsystems shall be OPERABLE.

APPLICABILITY: MODES 1 and 2.

ACTIONS

CONDITION	REQUIRED ACTION	COMPLETION TIME
A. Concentration of boron in solution not within limits.	A.1 Restore concentration of boron in solution to within limits.	72 hours AND 10 days from discovery of failure to meet the LCO
B. One SLC subsystem inoperable for reasons other than Condition A.	B.1 Restore SLC subsystem to OPERABLE status.	7 days AND 10 days from discovery of failure to meet the LCO
C. Two SLC subsystems inoperable for reasons other than Condition A.	C.1 Restore one SLC subsystem to OPERABLE status.	8 hours
D. Required Action and associated Completion Time not met.	D.1 Be in MODE 3.	12 hours

SURVEILLANCE REQUIREMENTS

SURVEILLANCE		FREQUENCY
SR 3.1.7.1	Verify available volume of sodium pentaborate solution is ≥ 23.1 m^3.	24 hours
SR 3.1.7.2	Verify temperature of sodium pentaborate solution is within the limits of Figure 3.1.7-1.	24 hours
SR 3.1.7.3	Verify the concentration of boron in solution is within the limits of Figure 3.1.7-1.	31 days AND Once within 24 hours after water or boron is added to solution AND Once within 24 hours after solution temperature is restored within the limits of Figure 3.1.7-1
SR 3.1.7.4	Verify each SLC subsystem manual, power operated, and automatic valve in the flow path that is not locked, sealed, or otherwise secured in position is in the correct position, or can be aligned to the correct position.	31 days
SR 3.1.7.5	Verify each pump develops a flow rate ≥ 11.4 m^3/h at a discharge pressure ≥ 8.43 MPaG.	92 days

(continued)

SURVEILLANCE REQUIREMENTS (continued)

SURVEILLANCE		FREQUENCY
SR 3.1.7.6	Verify one complete cycle of each motor operated valve.	92 days
SR 3.1.7.7	Verify flow through one SLC subsystem from pump into reactor pressure vessel.	18 months on a STAGGERED TEST BASIS
SR 3.1.7.8	Verify that simultaneous operation of both pumps develop a flow rate $\geq$ 22.7 m^3/h at a pressure $\geq$ 8.43 MPaG.	18 months

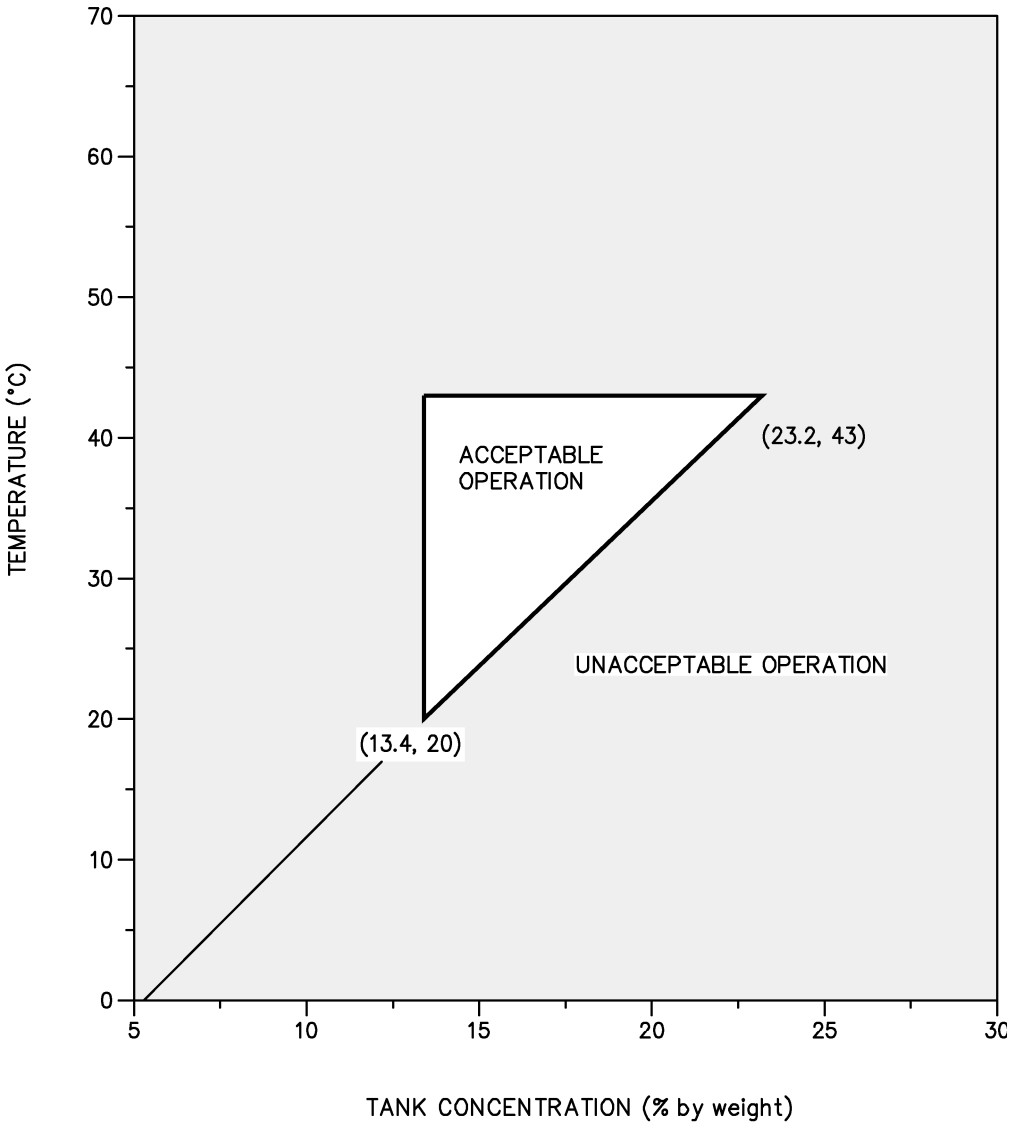

Figure 3.1.7-1 (Page 1 of 1)
Sodium Pentaborate Solution Temperature / Concentration Requirements

3.2 POWER DISTRIBUTION LIMITS

3.2.1 AVERAGE PLANAR LINEAR HEAT GENERATION RATE (APLHGR)

LCO 3.2.1 All APLHGRs shall be less than or equal to the limits specified in the COLR.

APPLICABILITY: THERMAL POWER ≥ 25% RTP.

ACTIONS

CONDITION	REQUIRED ACTION	COMPLETION TIME
A. Any APLHGR not within limits.	A.1 Restore APLHGR(s) to within limits.	2 hours
B. Required Action and associated Completion Time not met.	B.1 Reduce THERMAL POWER to < 25% RTP.	4 hours

SURVEILLANCE REQUIREMENTS

SURVEILLANCE		FREQUENCY
SR 3.2.1.1	Verify all APLHGRs are less than or equal to the limits specified in the COLR.	Once within 12 hours after ≥ 25% RTP AND 24 hours thereafter

3.2 POWER DISTRIBUTION LIMITS

3.2.2 MINIMUM CRITICAL POWER RATIO (MCPR)

LCO 3.2.2 All MCPRs shall be greater than or equal to the MCPR operating limits specified in the COLR.

APPLICABILITY: THERMAL POWER ≥ 25% RTP.

ACTIONS

CONDITION	REQUIRED ACTION	COMPLETION TIME
A. Any MCPR not within limits.	A.1 Restore MCPR(s) to within limits.	2 hours
B. Required Action and associated Completion Time not met.	B.1 Reduce THERMAL POWER to < 25% RTP.	4 hours

SURVEILLANCE REQUIREMENTS

SURVEILLANCE		FREQUENCY
SR 3.2.2.1	Verify all MCPRs are greater than or equal to the limits specified in the COLR.	Once within 12 hours after ≥ 25% RTP AND 24 hours thereafter

3.2 POWER DISTRIBUTION LIMITS

3.2.3 LINEAR HEAT GENERATION RATE (LHGR) (Non-GE Fuel)

Not Used.

3.3 INSTRUMENTATION

3.3.1.1 Safety System Logic and Control (SSLC) Sensor Instrumentation

LCO 3.3.1.1 The SSLC instrumentation for each Function in Table 3.3.1.1-1 shall be OPERABLE.

APPLICABILITY: According to Table 3.3.1.1-1.

ACTIONS

----------NOTE----------
Separate Condition entry is allowed for each channel.

CONDITION	REQUIRED ACTION	COMPLETION TIME
A. One or more Functions with one required SENSOR CHANNEL inoperable.	A.1 Place SENSOR CHANNEL in trip.	6 hours
	OR	
	A.2.1.1 ----------NOTE---------- Applies only to Functions 3 through 33. ----------	
	Place affected division in division of sensors bypass	6 hours
	OR	
	A.2.1.2 ----------NOTE---------- Applies only to Functions 1 & 2. ----------	
	Place channel in bypass at Neutron Monitoring System.	6 hours
	AND	

ACTIONS (continued)

CONDITION	REQUIRED ACTION	COMPLETION TIME
A. (continued)	A.2.2.1 Restore required channel to OPERABLE status. <u>OR</u> A.2.2.2 ----------NOTE---------- 1. Remove division of sensors bypass or NMS channel bypass after placing channel in trip. 2. Division of sensor bypass or NMS bypass is allowed for 6 hours for restoring channel to OPERABLE status. 3. SENSOR CHANNEL(s) may be considered to remain in a tripped condition when a division containing tripped channel(s) is placed in division of sensors bypass due to subsequent entries into this condition. ---------- Place channel in trip.	30 days

ACTIONS (continued)

CONDITION	REQUIRED ACTION	COMPLETION TIME
B. One or more Functions with two required SENSOR CHANNELS inoperable.	B.1 Place one channel in trip.	3 hours
	AND	
	B.2.1 ----------NOTE---------- Applies only to Functions 3 through 33. ----------	
	Place the other affected division in division of sensors bypass.	6 hours
	OR	
	B.2.2 ----------NOTE---------- Applies only to Functions 1 & 2. ----------	
	Place the other affected channel in bypass.	6 hours
	AND	
	B.3 Restore at least one required channel to OPERABLE status.	30 days
C. One or more Functions with three required SENSOR CHANNELS inoperable.	C.1 Place one channel in trip.	Immediately
	AND	
	C.2 Restore at least one required channel to OPERABLE status.	6 hours

ACTIONS (continued)

CONDITION	REQUIRED ACTION	COMPLETION TIME
D. One or more Functions with four required SENSOR CHANNELS inoperable.	D.1 Place one channel in trip. AND D.2 Restore at least one required channel to OPERABLE status.	Immediately 1 hour
E. Required Action and associated Completion Time of Condition A, B, C, or D not met.	E.1 Enter the Condition referenced in Table 3.3.1.1-1 for the Function.	Immediately
F. As required by Required Action E.1 and referenced in Table 3.3.1.1-1.	F.1 Reduce THERMAL POWER to below the level listed in Table 3.3.1.1-1 for the Function.	4 hours
G. As required by Required Action E.1 and referenced in Table 3.3.1.1-1.	G.1 Be in MODE 2.	6 hours
H. As required by Required Action E.1 and referenced in Table 3.3.1.1-1.	H.1 Be in MODE 3.	12 hours
I. As required by Required Action E.1 and referenced in Table 3.3.1.1-1.	I.1 Initiate action to insert all insertable control rods in core cells containing one or more fuel assemblies.	Immediately

ACTIONS (continued)

CONDITION	REQUIRED ACTION	COMPLETION TIME
J. As required by Required Action E.1 and referenced in Table 3.3.1.1-1.	J.1 Initiate action to place the reactor power/flow relationship outside of the region of applicability shown in Figure 3.3.1.1-1.	Immediately
K. As required by Required Action E.1 and referenced in Table 3.3.1.1-1.	K.1 Isolate the affected penetration flow path(s).	1 hour
L. As required by Required Action E.1 and referenced in Table 3.3.1.1-1.	L.1 Isolate the affected penetration flow path(s).	Immediately
	OR	
	L.2.1 Suspend CORE ALTERATIONS.	Immediately
	AND	
	L.2.2 ----------NOTE---------- Applies only to Function 24. ---------- Suspend movement of irradiated fuel assemblies in the containment.	Immediately
	AND	
	L.2.3 Initiate action to suspend operations with a potential for draining the reactor vessel.	Immediately

ACTIONS (continued)

CONDITION	REQUIRED ACTION	COMPLETION TIME
M. As required by Required Action E.1 and referenced in Table 3.3.1.1-1.	----------NOTE---------- Only applicable if RCIC and/or HPCF pump suction is not aligned to the suppression pool. ----------	
	M.1 Align RCIC and HPCF suction to the suppression pool.	1 hour from discovery of loss of transfer capability.
N. As required by Required Action E.1 and referenced in Table 3.3.1.1-1.	N.1 Declare supported feature(s) inoperable.	1 hour
O. Required Action and associated Completion Time of Condition M.1 not met.	O.1 Declare supported feature(s) inoperable.	Immediately
P. As required by Required Action E.1 and referenced in Table 3.3.1.1-1.	P.1 Be in MODE 3.	12 hours
	AND	
	P.2 Be in MODE 4.	36 hours
Q. As required by Required Action E.1 and referenced in Table 3.3.1.1-1.	Q.1 Isolate the associated penetration flow path(s)	12 hours
	OR	
	Q.2.1 Be in MODE 3.	12 hours
	AND	
	Q.2.2 Be in MODE 4.	36 hours

ACTIONS (continued)

CONDITION	REQUIRED ACTION	COMPLETION TIME
R. Required Action and associated Completion Time of Condition K.1 not met.	R.1 Be in MODE 3. AND R.2 Be in MODE 4.	12 hours 36 hours

SURVEILLANCE REQUIREMENTS

----------NOTE----------

Refer to Table 3.3.1.1-1 to determine which SRs apply for each SSLC Sensor Instrumentation Function.

SURVEILLANCE		FREQUENCY
SR 3.3.1.1.1	Perform SENSOR CHANNEL CHECK.	12 hours
SR 3.3.1.1.2	----------NOTE---------- Only required to be met with THERMAL POWER ≥ 25% RTP. --- Verify the absolute difference between the average power range monitor (APRM) channels and the calculated power is ≤ 2% RTP	7 days
SR 3.3.1.1.3	----------NOTE---------- Not required to be performed when entering MODE 2 from MODE 1 until 12 hours after entering MODE 2. --- Perform DIVISION FUNCTIONAL TEST.	7 days
SR 3.3.1.1.4	Perform DIVISION FUNCTIONAL TEST.	31 days
SR 3.3.1.1.5	Perform DIVISION FUNCTIONAL TEST	92 days
SR 3.3.1.1.6	Perform CHANNEL FUNCTIONAL TEST	92 days

SURVEILLANCE REQUIREMENTS (continued)

SURVEILLANCE		FREQUENCY
SR 3.3.1.1.7	Calibrate the local power range monitors.	1000 MW·d/t average core exposure
SR 3.3.1.1.8	----------NOTE---------- 1. Required to be met with THERMAL POWER ≤ 5% RTP prior to entry into MODE 1 from MODE 2. 2. Required to be met prior to entry into MODE 2 from MODE 1. ---------- Verify the SRNM and APRM channels overlap within at least 1/2 decade.	7 days
SR 3.3.1.1.9	----------NOTE---------- Radiation and Neutron detectors are excluded. ---------- Perform COMPREHENSIVE FUNCTIONAL TEST.	18 months
SR 3.3.1.1.10	----------NOTES---------- 1. Neutron detectors are excluded. 2. SENSOR CHANNEL CALIBRATION shall include calibration of all parameters used to calculate setpoints (e.g., recirculation flow for TPM setpoint) and all parameters used for trip function bypasses (e.g., Turbine first stage pressure for TSV closure bypass). ---------- Perform SENSOR CHANNEL CALIBRATION.	18 months

SURVEILLANCE REQUIREMENTS (continued)

SURVEILLANCE		FREQUENCY
SR 3.3.1.1.11	Perform CHANNEL CALIBRATION	18 months
SR 3.3.1.1.12	----------NOTE---------- Neutron detectors are excluded. ---------- Verify RPS RESPONSE TIME is within limits.	18 months
SR 3.3.1.1.13	Verify ECCS RESPONSE TIME is within limits.	18 months
SR 3.3.1.1.14	----------NOTE---------- Neutron detectors are excluded. ---------- Verify ISOLATION RESPONSE TIME is within limits.	18 months

Table 3.3.1.1-1 (Page 1 of 9)
SSLC Sensor Instrumentation

FUNCTION	APPLICABLE MODES OR OTHER SPECIFIED CONDITIONS	REQUIRED CHANNELS	CONDITIONS REFERENCED FROM REQUIRED ACTIONS	SURVEILLANCE REQUIREMENTS	ALLOWABLE VALUE
1. Startup Range Neutron Monitors					
1a. SRNM Neutron Flux – High	2	4	H	SR 3.3.1.1.1 SR 3.3.1.1.3 SR 3.3.1.1.8 SR 3.3.1.1.9 SR 3.3.1.1.10	≤ (i)% RTP
	5[a]	4	I	SR 3.3.1.1.1 SR 3.3.1.1.4 SR 3.3.1.1.9 SR 3.3.1.1.10	≤ (i)% RTP
1b. SRNM Neutron Flux – Short Period	2[b]	4	H	SR 3.3.1.1.1 SR 3.3.1.1.3 SR 3.3.1.1.8	≤ (i) Seconds
	5[a] [b]	4	I	SR 3.3.1.1.1 SR 3.3.1.1.4 SR 3.3.1.1.9 SR 3.3.1.1.10	≤ (i) Seconds
1c. SRNM ATWS Permissive	1,2	4	H	SR 3.3.1.1.5 SR 3.3.1.1.9	≤ (i) RTP for ≥ (i) min
1d. SRNM - Inop	1,2	4	H	SR 3.3.1.1.3	NA
	5[a]	4	I	SR 3.3.1.1.4 SR 3.3.1.1.9	
2. Average Power Range Monitors					
2a. APRM Neutron Flux – High, Setdown	2	4	H	SR 3.3.1.1.1 SR 3.3.1.1.3 SR 3.3.1.1.7 SR 3.3.1.1.8	≤ (i)% RTP

Table 3.3.1.1-1 (Page 2 of 9)
SSLC Sensor Instrumentation

	FUNCTION	APPLICABLE MODES OR OTHER SPECIFIED CONDITIONS	REQUIRED CHANNELS	CONDITIONS REFERENCED FROM REQUIRED ACTIONS	SURVEILLANCE REQUIREMENTS	ALLOWABLE VALUE
2b.	APRM Simulated Thermal Power – High, Flow Biased	1	4	G	SR 3.3.1.1.1 SR 3.3.1.1.2 SR 3.3.1.1.5 SR 3.3.1.1.7 SR 3.3.1.1.9 SR 3.3.1.1.10 SR 3.3.1.1.12	≤ (i)% RTP and ≤ (i)% RTP
2c.	APRM Fixed Neutron Flux – High	1	4	G	SR 3.3.1.1.1 SR 3.3.1.1.2 SR 3.3.1.1.5 SR 3.3.1.1.7 SR 3.3.1.1.9 SR 3.3.1.1.10 SR 3.3.1.1.12	(i)% RTP
2d.	APRM - Inop	1,2	4	H	SR 3.3.1.1.5 SR 3.3.1.1.7	NA
2e.	Rapid Core Flow Decrease	≥ 75% RTP	4	F	SR 3.3.1.1.1 SR 3.3.1.1.5 SR 3.3.1.1.9 SR 3.3.1.1.10 SR 3.3.1.1.12	≥ (i)%/s
2f.	Oscillation Power Range Monitor.	Per Figure 3.3.1.1-1	4	J	SR 3.3.1.1.1 SR 3.3.1.1.5 SR 3.3.1.1.9 SR 3.3.1.1.10 SR 3.3.1.1.12	See footnote (c)
2g.	APRM ATWS ADS Permissive	1,2	4	H	SR 3.3.1.1.5 SR 3.3.1.1.9	≤ (i) RTP for ≥ (i) min
3.	Reactor Vessel Steam Dome Pressure – High					
3a.	RPS Trip Initiation	1,2	4	H	SR 3.3.1.1.1 SR 3.3.1.1.5 SR 3.3.1.1.9 SR 3.3.1.1.10 SR 3.3.1.1.12	≤ (i) MPaG

Table 3.3.1.1-1 (Page 3 of 9)
SSLC Sensor Instrumentation

FUNCTION	APPLICABLE MODES OR OTHER SPECIFIED CONDITIONS	REQUIRED CHANNELS	CONDITIONS REFERENCED FROM REQUIRED ACTIONS	SURVEILLANCE REQUIREMENTS	ALLOWABLE VALUE
3b. Isolation Initiation	1,2,3	4	K	SR 3.3.1.1.1 SR 3.3.1.1.5 SR 3.3.1.1.9 SR 3.3.1.1.10 SR 3.3.1.1.14	≤ (i) MPaG
3c. SLCS and FWRB Initiation	1,2	4	H	SR 3.3.1.1.1 SR 3.3.1.1.6 SR 3.3.1.1.11	≤ (i) MPaG
4. Reactor Steam Dome Pressure – Low (Injection Permissive)	1,2,3	4	N	SR 3.3.1.1.1 SR 3.3.1.1.5 SR 3.3.1.1.9 SR 3.3.1.1.10 SR 3.3.1.1.13	≤ (i) MPaG
5. Reactor Vessel Water Level – High, Level 8	1,2,3 4[e],5[e]	4	N	SR 3.3.1.1.1 SR 3.3.1.1.5 SR 3.3.1.1.9 SR 3.3.1.1.10	≤ (i) cm
6. Reactor Vessel Water Level – Low, Level 3					
6a. RPS Trip Initiation.	1,2	4	H	SR 3.3.1.1.1 SR 3.3.1.1.5 SR 3.3.1.1.9 SR 3.3.1.1.10 SR 3.3.1.1.12	≥ (i) cm
6b. Isolation Initiation.	1,2,3	4	K	SR 3.3.1.1.1 SR 3.3.1.1.5 SR 3.3.1.1.9 SR 3.3.1.1.10 SR 3.3.1.1.14	≥ (i) cm
	(f)	4	L	SR 3.3.1.1.1 SR 3.3.1.1.5 SR 3.3.1.1.9 SR 3.3.1.1.10 SR 3.3.1.1.14	

Table 3.3.1.1-1 (Page 4 of 9)
SSLC Sensor Instrumentation

FUNCTION	APPLICABLE MODES OR OTHER SPECIFIED CONDITIONS	REQUIRED CHANNELS	CONDITIONS REFERENCED FROM REQUIRED ACTIONS	SURVEILLANCE REQUIREMENTS	ALLOWABLE VALUE
7. Reactor Vessel Water Level - Low, Level 2					
7a. ESF Initiation	1,2,3	4	N	SR 3.3.1.1.1 SR 3.3.1.1.5 SR 3.3.1.1.9 SR 3.3.1.1.10 SR 3.3.1.1.13	≥ (i) cm
7b. Isolation Initiation.	1,2,3	4	K	SR 3.3.1.1.1 SR 3.3.1.1.5 SR 3.3.1.1.9 SR 3.3.1.1.10 SR 3.3.1.1.14	≥ (i) cm
	(f)	4	L	SR 3.3.1.1.1 SR 3.3.1.1.5 SR 3.3.1.1.9 SR 3.3.1.1.10 SR 3.3.1.1.14	
7c. SLCS and FWRB Initiation	1,2	4	H	SR 3.3.1.1.1 SR 3.3.1.1.6 SR 3.3.1.1.11	≥ (i) cm
8. Reactor Vessel Water Level – Low, Level 1.5					
8a. ESF Initiation.	1,2,3 4[e],5[e]	4	N	SR 3.3.1.1.1 SR 3.3.1.1.5 SR 3.3.1.1.9 SR 3.3.1.1.10 SR 3.3.1.1.13	≥ (i) cm
8b. Isolation Initiation.	1,2,3	4	Q	SR 3.3.1.1.1 SR 3.3.1.1.5 SR 3.3.1.1.9 SR 3.3.1.1.10 SR 3.3.1.1.14	≥ (i) cm
8c. ATWS ADS Inhibit.	1,2	4	H	SR 3.3.1.1.1 SR 3.3.1.1.5 SR 3.3.1.1.9 SR 3.3.1.1.10	≥ (i) cm

Table 3.3.1.1-1 (Page 5 of 9)
SSLC Sensor Instrumentation

FUNCTION	APPLICABLE MODES OR OTHER SPECIFIED CONDITIONS	REQUIRED CHANNELS	CONDITIONS REFERENCED FROM REQUIRED ACTIONS	SURVEILLANCE REQUIREMENTS	ALLOWABLE VALUE
9. Reactor Vessel Water Level – Low, Level 1					
9a. ADS A, CAMS A, LPFL A & LPFL C Initiation	1,2,3 4[e],5[e]	4	N	SR 3.3.1.1.1 SR 3.3.1.1.5 SR 3.3.1.1.9 SR 3.3.1.1.10 SR 3.3.1.1.13	≥ (i) cm
9b. ADS B, Diesel Generator, RCW, CAMS B, & LPFL B Initiation	1,2,3 4[e],5[e]	4	N	SR 3.3.1.1.1 SR 3.3.1.1.5 SR 3.3.1.1.9 SR 3.3.1.1.10 SR 3.3.1.1.13	≥ (i) cm
9c. Isolation Initiation	1,2,3	4	Q	SR 3.3.1.1.1 SR 3.3.1.1.5 SR 3.3.1.1.9 SR 3.3.1.1.10 SR 3.3.1.1.14	≥ (i) cm
10. Main Steam Isolation Valve - Closure	1	4	G	SR 3.3.1.1.5 SR 3.3.1.1.9 SR 3.3.1.1.10 SR 3.3.1.1.12	≤ (i)% closed
11. Drywell Pressure – High					
11a. RPS Initiation.	1,2	4	H	SR 3.3.1.1.1 SR 3.3.1.1.5 SR 3.3.1.1.9 SR 3.3.1.1.10 SR 3.3.1.1.12	≤ (i) MPaG
11b. ESF Initiation.	1,2,3	4	P	SR 3.3.1.1.1 SR 3.3.1.1.5 SR 3.3.1.1.9 SR 3.3.1.1.10 SR 3.3.1.1.13	≤ (i) MPaG
11c. Isolation Initiation.	1,2,3	4	Q	SR 3.3.1.1.1 SR 3.3.1.1.5 SR 3.3.1.1.9 SR 3.3.1.1.10 SR 3.3.1.1.14	≤ (i) MPaG

Table 3.3.1.1-1 (Page 6 of 9)
SSLC Sensor Instrumentation

FUNCTION	APPLICABLE MODES OR OTHER SPECIFIED CONDITIONS	REQUIRED CHANNELS	CONDITIONS REFERENCED FROM REQUIRED ACTIONS	SURVEILLANCE REQUIREMENTS	ALLOWABLE VALUE
11d. Feedwater Line Break Mitigation Initiation.	1,2,3	4	P	SR 3.3.1.1.1 SR 3.3.1.1.5 SR 3.3.1.1.9 SR 3.3.1.1.10 SR 3.3.1.1.13	≤ (i) MPaG
12. CRD Water Header Charging Pressure - Low	1,2	4	H	SR 3.3.1.1.1 SR 3.3.1.1.5	≤ (i) MPaG
	5[(a)]	4	I	SR 3.3.1.1.1 SR 3.3.1.1.5 SR 3.3.1.1.9 SR 3.3.1.1.10	
13. Turbine Stop Valve - Closure	≥ 40% RTP	4	F	SR 3.3.1.1.5 SR 3.3.1.1.9 SR 3.3.1.1.10 SR 3.3.1.1.12	≤ (i)% closed
14. Turbine Control Valve Fast Closure, Trip Oil Pressure – Low	≥ 40% RTP	4	F	SR 3.3.1.1.1 SR 3.3.1.1.5 SR 3.3.1.1.9 SR 3.3.1.1.10 SR 3.3.1.1.12	≥ (i) MPaG oil pressure
15. Feedwater Line Differential Pressure - High	1,2,3	4	P	SR 3.3.1.1.1 SR 3.3.1.1.5 SR 3.3.1.1.9 SR 3.3.1.1.10 SR 3.3.1.1.13	≤ (i) MPaD
16. Suppression Pool Temperature - High					
16a. RPS Initiation.	1,2	4	H	SR 3.3.1.1.1 SR 3.3.1.1.5 SR 3.3.1.1.9 SR 3.3.1.1.10 SR 3.3.1.1.12	≤ (i) °C
16b. ESF Initiation.	1,2,3	4	N	SR 3.3.1.1.1 SR 3.3.1.1.5 SR 3.3.1.1.9 SR 3.3.1.1.10	≤ (i) °C

Table 3.3.1.1-1 (Page 7 of 9)
SSLC Sensor Instrumentation

FUNCTION	APPLICABLE MODES OR OTHER SPECIFIED CONDITIONS	REQUIRED CHANNELS	CONDITIONS REFERENCED FROM REQUIRED ACTIONS	SURVEILLANCE REQUIREMENTS	ALLOWABLE VALUE
17. Condensate Storage Tank Level - Low	1,2,3 4[e],5[e]	4	M	SR 3.3.1.1.1 SR 3.3.1.1.5 SR 3.3.1.1.9 SR 3.3.1.1.10	≥ (i) cm
18. Suppression Pool Water Level - High	1,2,3 4[e],5[e]	4	M	SR 3.3.1.1.1 SR 3.3.1.1.5 SR 3.3.1.1.9 SR 3.3.1.1.10	≤ (i) cm
19. Main Steam Line Pressure – Low	1	4	G	SR 3.3.1.1.1 SR 3.3.1.1.5 SR 3.3.1.1.9 SR 3.3.1.1.10	≤ (i) MPaG
20. Main Steam Line Flow –- High	1,2,3	4 per MSL	Q	SR 3.3.1.1.1 SR 3.3.1.1.5 SR 3.3.1.1.9 SR 3.3.1.1.10 SR 3.3.1.1.14	≥ (i) kg/hr
21. Condenser Vacuum – Low	1,2[d],3[d]	4	Q	SR 3.3.1.1.1 SR 3.3.1.1.5 SR 3.3.1.1.9 SR 3.3.1.1.10	≥ (i) MPaG
22. Main Steam Tunnel Temperature – High	1,2,3	4	Q	SR 3.3.1.1.1 SR 3.3.1.1.5 SR 3.3.1.1.9 SR 3.3.1.1.10	≤ (i) °C
23. Main Turbine Area Temperature - High	1,2,3	4	Q	SR 3.3.1.1.1 SR 3.3.1.1.5 SR 3.3.1.1.9 SR 3.3.1.1.10	≤ (i) °C
24a. Reactor Building Area Exhaust Air Radiation - High	1,2,3	4	K	SR 3.3.1.1.1 SR 3.3.1.1.5	≤ (i) gray
	(f), (g)	4	L	SR 3.3.1.1.1 SR 3.3.1.1.5 SR 3.3.1.1.9 SR 3.3.1.1.10 SR 3.3.1.1.14	

Table 3.3.1.1-1 (Page 8 of 9)
SSLC Sensor Instrumentation

FUNCTION	APPLICABLE MODES OR OTHER SPECIFIED CONDITIONS	REQUIRED CHANNELS	CONDITIONS REFERENCED FROM REQUIRED ACTIONS	SURVEILLANCE REQUIREMENTS	ALLOWABLE VALUE
24b. Fuel Handling Area Exhaust Air Radiation - High	1,2,3	4	K	SR 3.3.1.1.1 SR 3.3.1.1.5	≤ (i) gray
	(f),(g)	4	L	SR 3.3.1.1.1 SR 3.3.1.1.5 SR 3.3.1.1.9 SR 3.3.1.1.10 SR 3.3.1.1.14	
25. RCIC Steam Line Flow – High	1,2,3	4	K	SR 3.3.1.1.1 SR 3.3.1.1.5 SR 3.3.1.1.9 SR 3.3.1.1.10	≥ (i) kg/hr
26. RCIC Steam Supply Line Pressure — Low	1,2,3	4	K	SR 3.3.1.1.1 SR 3.3.1.1.5 SR 3.3.1.1.9 SR 3.3.1.1.10	≤ (i) MPaG
27. RCIC Equipment Area Temperature – High	1,2,3	4	K	SR 3.3.1.1.1 SR 3.3.1.1.5 SR 3.3.1.1.9 SR 3.3.1.1.10	≤ (i) °C
28. RHR Area Temperature - High	2,3	4 each RHR area	K	SR 3.3.1.1.1 SR 3.3.1.1.5 SR 3.3.1.1.9 SR 3.3.1.1.10	≤ (i) °C
29. CUW Differential Flow – High	1,2,3	4	K	SR 3.3.1.1.1 SR 3.3.1.1.5 SR 3.3.1.1.9 SR 3.3.1.1.10	≤ (i) Liters/min for ≤ (i) Seconds
30. CUW Regenerative Heat Exchanger Area Temperature – High	1,2,3	4	K	SR 3.3.1.1.1 SR 3.3.1.1.5 SR 3.3.1.1.9 SR 3.3.1.1.10	≤ (i) °C
31. CUW non-regenerative Heat Exchanger Area Temperature – High	1,2,3	4	K	SR 3.3.1.1.1 SR 3.3.1.1.5 SR 3.3.1.1.9 SR 3.3.1.1.10	≤ (i) °C

Table 3.3.1.1-1 (Page 9 of 9)
SSLC Sensor Instrumentation

FUNCTION	APPLICABLE MODES OR OTHER SPECIFIED CONDITIONS	REQUIRED CHANNELS	CONDITIONS REFERENCED FROM REQUIRED ACTIONS	SURVEILLANCE REQUIREMENTS	ALLOWABLE VALUE
32. CUW Equipment Area Temperature – High	1,2,3	4	K	SR 3.3.1.1.1 SR 3.3.1.1.5 SR 3.3.1.1.9 SR 3.3.1.1.10	≤ (i) °C
33. RCW/RSW Heat Exchanger Room Water Level – High	(h)	4 each RCW/RSW HX Room	K	SR 3.3.1.1.1 SR 3.3.1.1.5 SR 3.3.1.1.9 SR 3.3.1.1.10	≤ (i) m

(a) With any control rod withdrawn from a core cell containing one or more fuel assemblies.

(b) Trip automatically bypassed within each SRNM and not required to be OPERABLE at reactor power levels ≤ 0.0001% RTP.

(c) 1. Neutron flux oscillations within any OPRM cell have a period between 1.15 seconds and 3.35 seconds that persists for 10 cycles with a peak to peak amplitude of that is 10% of point or greater.

2. Neutron flux oscillations within any OPRM cell that have a period between 0.31 and 2.2 seconds become larger than 30% of point within 3 periods or oscillations with the specified period range that are greater than 10% of point grow by 30% of point within 3 cycles.

(d) With any Turbine Stop Valve not fully closed.

(e) When associated features are required to be operable.

(f) During CORE ALTERATIONS or operations with a potential for draining the reactor vessel.

(g) During movement of irradiated fuel assemblies in the secondary containment.

(h) When RSW pumps are required to be OPERABLE or in operation.

(i) In accordance with TS 5.5.2.11, “Setpoint Control Program.”

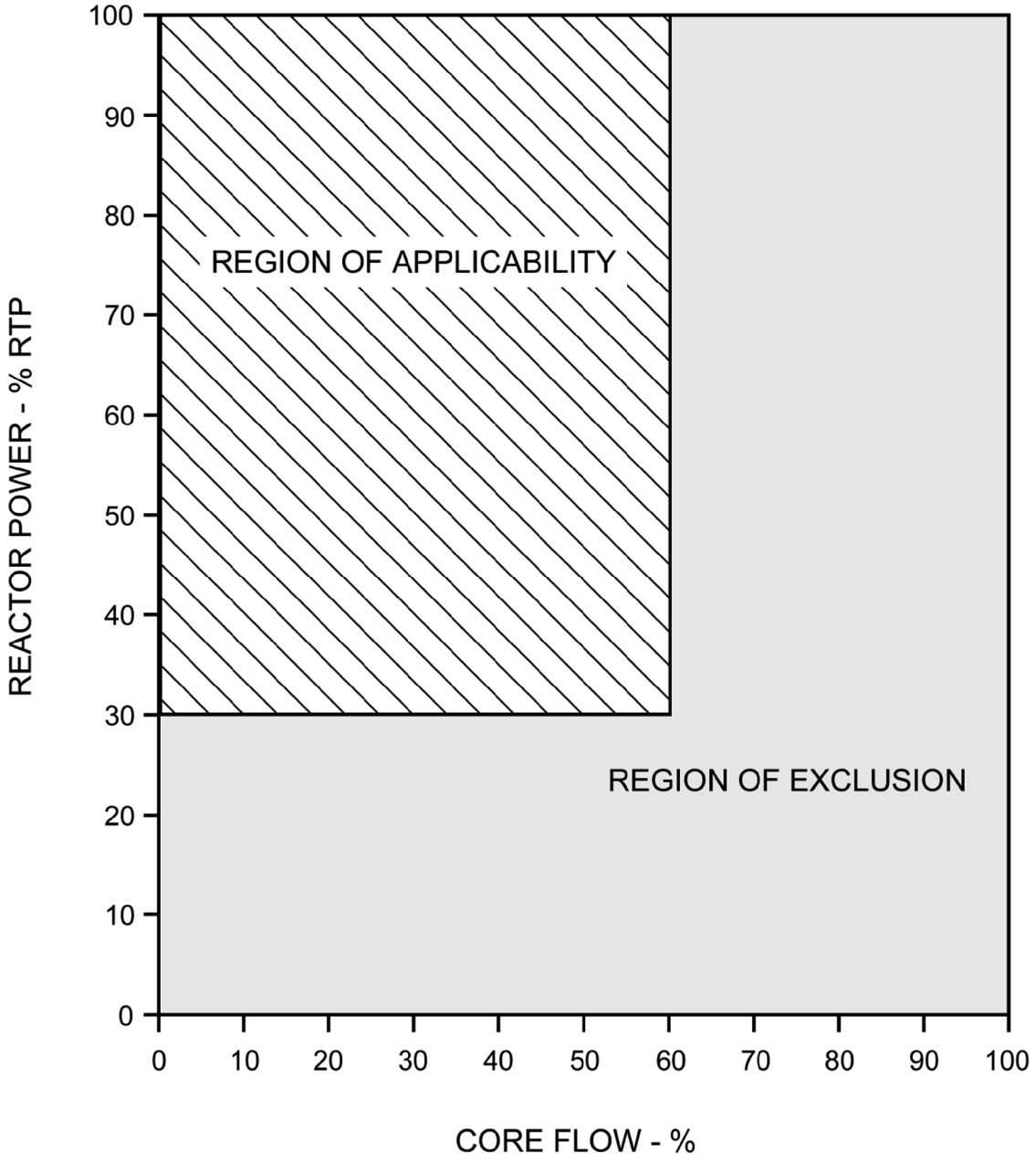

FIGURE 3.3.1.1-1
OSCILLATION POWER RANGE FUNCTION CONDITIONS OF OPERABILITY

3.3 INSTRUMENTATION

3.3.1.2 Reactor Protection System (RPS) and Main Steam Isolation Valve (MSIV) Actuation

LCO 3.3.1.2 The RPS and MSIV Actuation Functions in Table 3.3.1.2-1 shall be OPERABLE.

APPLICABILITY: According to Table 3.3.1.2-1.

----------NOTE----------
Separate condition entry is allowed for each channel.

ACTIONS

CONDITION	REQUIRED ACTION	COMPLETION TIME
A. One or more Functions with one channel inoperable.	----------NOTE---------- Only applicable to Functions 1a, 2a, and 5. ----------	
	A.1 Place affected division in trip.	6 hours
	<u>OR</u>	
	A.2.1 Place affected division in TLU logic output bypass.	6 hours
	<u>AND</u>	
	A.2.2.1 Restore required channel(s) to OPERABLE status	30 days
	<u>OR</u>	
	A.2.2.2 Place affected division in trip.	30 days

ACTIONS (continued)

CONDITION	REQUIRED ACTION	COMPLETION TIME
B. One or more Functions with two channels inoperable.	----------NOTE---------- Only applicable to Functions 1a, 2a, and 5. ----------	
	B.1 Place one affected division in trip.	3 hours
	AND	
	B.2 Place the other affected division in TLU logic output bypass.	6 hours
	AND	
	B.3 Restore at least one inoperable channel to OPERABLE status.	30 days
C. One or more Functions with three channels inoperable.	----------NOTE---------- Only applicable to Functions 1a, 2a, and 5. ----------	
	C.1 Place one affected division in trip.	Immediately
	AND	
	C.2 Restore at least one inoperable channel to OPERABLE status	6 hours

ACTIONS (continued)

CONDITION	REQUIRED ACTION	COMPLETION TIME
D. One or more Functions with four channels inoperable.	----------NOTE---------- Only applicable to Functions 1a, 2a, and 5. ----------	
	D.1 Place one affected division in trip.	Immediately
	AND	
	D.2 Restore at least one inoperable channel to OPERABLE status	1 hour
E. One or more Functions with one OUTPUT CHANNEL inoperable.	----------NOTE---------- Only applicable to Functions 1.b and 2.b. ----------	
	E.1 Place inoperable channel in trip	6 hours
F. One or more Functions with two OUTPUT CHANNELs inoperable.	----------NOTE---------- Only applicable to Functions 1b and 2b. ----------	
	F.1 Place one inoperable channel in trip.	1 hour
	AND	
	F.2 Restore at least one inoperable channel to OPERABLE status.	7 days

ACTIONS (continued)

CONDITION	REQUIRED ACTION	COMPLETION TIME
G. One or more Functions with three or more OUTPUT CHANNELs inoperable.	----------NOTE---------- Only applicable to Functions 1b and 2b. ----------	
	G.1 Restore at least two channels to OPERABLE status.	1 hour
H. One or more Reactor Mode Switch-Shutdown Position channels inoperable.	H.1 Restore required channel to OPERABLE status.	1 hour
I. One RPS manual scram channel inoperable.	I.1 Place affected division in trip.	1 hour
	AND	
	I.2 Restore required channel to OPERABLE status.	30 days
J. Required Action and associated Completion Time not met for Conditions A, B, C, D, E, F, G, H, or I in MODE 1 or 2.	----------NOTE---------- Only applicable to Functions 1, 3 and 4. ----------	
	J.1 Be in MODE 3.	12 hours
K. Required Action and associated Completion Time not met for Conditions A, B, C, D, E, F, G, H, or I in MODE 5 with any control rod withdrawn in a core cell containing at least one fuel assembly.	----------NOTE---------- Only applicable to Functions 1, 3 and 4. ----------	
	K.1 Initiate action to insert all insertable control rods in core cells containing one or more fuel assemblies.	Immediately

ACTIONS (continued)

CONDITION	REQUIRED ACTION	COMPLETION TIME
L. Required Action and associated Completion Time not met for Conditions A, B, C, D, E, F or G.	----------NOTE---------- Only applicable to Functions 2 and 5. ----------	
	L.1 Isolate the associated penetration flow path(s).	12 hours
	OR	
	L.2.1 Be in MODE 3.	12 hours
	AND	
	L.2.2 Be in MODE 4.	36 hours

SURVEILLANCE REQUIREMENTS

----------NOTE----------
Refer to Table 3.3.1.2-1 to determine which SRs apply for each RPS and MSIV Actuation Function.

SURVEILLANCE		FREQUENCY
SR 3.3.1.2.1	Perform CHANNEL FUNCTIONAL TEST.	7 days
SR 3.3.1.2.2	Perform DIVISION FUNCTIONAL TEST.	92 days
SR 3.3.1.2.3	Perform CHANNEL FUNCTIONAL TEST.	92 days
SR 3.3.1.2.4	Perform COMPREHENSIVE FUNCTIONAL TEST.	18 months
SR 3.3.1.2.5	Perform OUTPUT CHANNEL FUNCTIONAL TEST.	18 months

SURVEILLANCE REQUIREMENTS (continued)

SURVEILLANCE		FREQUENCY
SR 3.3.1.2.6	Verify RPS RESPONSE TIME is within limits.	18 months
SR 3.3.1.2.7	Verify ISOLATION RESPONSE TIME is within limits	18 months

Table 3.3.1.2-1 (Page 1 of 1)
RPS and MSIV Actuation

FUNCTION	APPLICABLE MODES OR OTHER SPECIFIED CONDITIONS	REQUIRED CHANNELS	SURVEILLANCE REQUIREMENTS
1. RPS Actuation.			
a. LOGIC CHANNELs	1, 2, 5[a][b]	4	SR 3.3.1.2.2 SR 3.3.1.2.4 SR 3.3.1.2.6
b. OUTPUT CHANNELs	1, 2, 5[a]	4	SR 3.3.1.2.4 SR 3.3.1.2.5 SR 3.3.1.2.6
2. MSIVs and MSL Drain Valves Actuation.			
a. LOGIC CHANNELs	1, 2, 3	4	SR 3.3.1.2.2 SR 3.3.1.2.4 SR 3.3.1.2.7
b. OUTPUT CHANNELs	1, 2, 3	4	SR 3.3.1.2.4 SR 3.3.1.2.5 SR 3.3.1.2.7
3. Manual RPS Scram.	1, 2, 5[a]	2	SR 3.3.1.2.1
4. Reactor Mode Switch-Shutdown Position.	1, 2, 5[a]	2	SR 3.3.1.2.4
5. Manual MSIV Actuation.	1, 2, 3	4	SR 3.3.1.2.3 SR 3.3.1.2.4

(a) With any control rod withdrawn in a core cell containing at least one fuel assembly.
(b) SRNM and APRM LOGIC CHANNELS are only required to be OPERABLE when the associated Functions in LCO 3.3.1.1 are required to be OPERABLE.

3.3 INSTRUMENTATION

3.3.1.3 Standby Liquid Control (SLC) and Feedwater Runback (FWRB) Actuation

LCO 3.3.1.3 The SLC and FWRB Actuation Functions in Table 3.3.1.3-1 shall be OPERABLE.

APPLICABILITY: MODES 1 AND 2.

----------NOTE----------
Separate condition entry is allowed for each channel.

ACTIONS

CONDITION	REQUIRED ACTION	COMPLETION TIME
A. One or more Functions with one LOGIC CHANNEL inoperable. <u>OR</u> One division with one or two manual ARI channels inoperable.	----------NOTE---------- Only applicable to Functions 1.a, 2.a, and 3. ---------- A.1 Place affected division in ATWS logic output bypass. <u>AND</u> A.2 Restore channel to OPERABLE status.	 6 hours 30 days
B. One or more Functions with two LOGIC CHANNELS inoperable. <u>OR</u> Two divisions with one or more manual ARI channels inoperable.	----------NOTE---------- Only applicable to Functions 1.a, 2.a, and 3. ---------- B.1 Place one affected division in ATWS logic output bypass. <u>AND</u> B.2 Restore the bypassed inoperable division to OPERABLE status.	 6 hours 7 days

ACTIONS (continued)

CONDITION	REQUIRED ACTION	COMPLETION TIME
C. One or more Functions with one OUTPUT CHANNEL inoperable.	----------NOTE---------- Only applicable to Functions 1.b and 2.b. ---------- C.1 Restore channel to OPERABLE status.	30 days
D. One or more Functions with two OUTPUT CHANNELs inoperable.	----------NOTE---------- Only applicable to Functions 1.b and 2.b. ---------- D.1 Restore at least one inoperable channel to OPERABLE status.	7 days
E. Required Action and associated Completion Time not met for Conditions A, B, C, or D. OR One or more Functions with three or more LOGIC CHANNELS or OUTPUT CHANNELS inoperable. OR Three or more divisions with one or more manual ARI channels inoperable	E.1 Declare SLC System inoperable.	1 hour

SURVEILLANCE REQUIREMENTS

----------NOTE----------
Refer to Table 3.3.1.3-1 to determine which SRs apply for each function.

SURVEILLANCE		FREQUENCY
SR 3.3.1.3.1	Perform DIVISION FUNCTIONAL TEST.	92 days
SR 3.3.1.3.2	Perform LOGIC SYSTEM FUNCTIONAL TEST.	18 months
SR 3.3.1.3.3	Perform OUTPUT CHANNEL FUNCTIONAL TEST.	18 months

Table 3.3.1.3-1 (Page 1 of 1)
SLC and FWRB Actuation

FUNCTION	REQUIRED CHANNELS	SURVEILLANCE REQUIREMENTS
1. SLC Actuation.		
a. LOGIC CHANNELs	4	SR 3.3.1.3.1 SR 3.3.1.3.2
b. OUTPUT CHANNELs	4	SR 3.3.1.3.2 SR 3.3.1.3.3
2. FWRB Actuation.		
a. LOGIC CHANNELs	4	SR 3.3.1.3.1 SR 3.3.1.3.2
b. OUTPUT CHANNELs	4	SR 3.3.1.3.2 SR 3.3.1.3.3
3. Manual ATWS-ARI/SLCS Initiation.	2/division	SR 3.3.1.3.1 SR 3.3.1.3.2

3.3 INSTRUMENTATION

3.3.1.4 ESF Actuation Instrumentation

LCO 3.3.1.4 The ESF Actuation Instrumentation for each Function in Table 3.3.1.4-1 shall be OPERABLE.

APPLICABILITY: According to Table 3.3.1.4-1.

ACTIONS

----------NOTE----------
Separate Condition entry is allowed for each channel.

CONDITION	REQUIRED ACTION	COMPLETION TIME
A. One or more Functions with one or more channels inoperable.	A.1 Enter the Conditions referenced in Table 3.3.1.4-1.	Immediately
B. One or more Functions with one or more LOGIC CHANNELS inoperable. <u>OR</u> One or more Functions with one or more OUTPUT CHANNELS inoperable.	B.1 Restore channel(s) to OPERABLE status.	1 hour
C. One or more Functions with one or more SENSOR CHANNELS inoperable.	C.1 Restore channel(s) to OPERABLE status.	1 hour

ACTIONS (continued)

CONDITION	REQUIRED ACTION	COMPLETION TIME
D. One or more Functions with one or more OUTPUT CHANNELs inoperable. <u>OR</u> HPCF C diverse logic manual initiation channel inoperable.	D.1 Restore ESF actuation capability for the affected devices. <u>OR</u> D.2 ----------NOTE---------- This Action applies only to Functions 10.b, 12.b, 13.b, and 14.b. ---------- Actuate associated device(s).	1 hour 1 hour
E. One or more Functions with one or more inoperable SENSOR CHANNELS.	E.1 Restore inoperable channel. <u>OR</u> E.2 Declare associated device(s) inoperable.	24 hours 24 hours
F. One or more Functions with one or more manual initiation channels inoperable.	F.1 Restore manual initiation capability for the affected Functions.	7 days
G. Required Action and associated Completion Time not met for Condition B, C, D, E, or F.	G.1 Declare supported feature(s) inoperable.	1 hour

ACTIONS (continued)

CONDITION	REQUIRED ACTION	COMPLETION TIME
H. One or more ADS OUTPUT CHANNELS inoperable in one ADS division. <u>OR</u> One or more ADS LOGIC CHANNELS inoperable in one ADS division. <u>OR</u> One or more ADS manual initiation channels inoperable in one ADS division. <u>OR</u> One or more ATWS manual ADS inhibit channels inoperable in one ADS division. <u>OR</u> Five required ADS SENSOR CHANNELS inoperable in one ADS division.	H.1 Restore channel(s) to OPERABLE status.	3 days if only one high pressure ECCS subsystem is OPERABLE <u>AND</u> 7 days if two or more high pressure ECCS subsystems are OPERABLE.

ACTIONS (continued)

CONDITION	REQUIRED ACTION	COMPLETION TIME
I. One or more SENSOR CHANNELS inoperable. <u>OR</u> One or more ADS OUTPUT CHANNELS inoperable in two ADS divisions. <u>OR</u> One or more ADS LOGIC CHANNELS inoperable in two ADS divisions. <u>OR</u> One or more ADS manual initiation channels inoperable in two ADS divisions. <u>OR</u> One or more ATWS manual ADS inhibit channels inoperable in two ADS divisions. <u>OR</u> Required Action and associated Completion Time of Condition H not met.	I.1 Declare associated ESF features inoperable.	1 hour
J. One or two required SENSOR CHANNELS inoperable in one or more ADS divisions.	J.1 Restore required channel(s) to OPERABLE status.	Prior to entering MODE 2 following the next MODE 4 entry

ACTIONS (continued)

CONDITION	REQUIRED ACTION	COMPLETION TIME
K. Three required SENSOR CHANNELS inoperable in one or more ADS divisions.	K.1 Restore three required channels to OPERABLE status.	7 days.
L. Four required SENSOR CHANNELS inoperable in one or more ADS divisions.	L.1 Restore two required channels to OPERABLE status.	24 hours.
M. ADS initiation capability not maintained in both ADS divisions. <u>OR</u> Required Actions and associated Completion Times of Condition J, K, or L not met.	M.1 Declare ADS valves inoperable.	Immediately

SURVEILLANCE REQUIREMENTS

----------NOTE----------

Refer to Table 3.3.1.4-1 to determine which SRs apply for each ESF Actuation Instrumentation Functions.

SURVEILLANCE		FREQUENCY
SR 3.3.1.4.1	Perform SENSOR CHANNEL CHECK.	12 hours
SR 3.3.1.4.2	Perform OUTPUT CHANNEL FUNCTIONAL TEST.	18 months
SR 3.3.1.4.3	Perform DIVISIONAL FUNCTIONAL TEST.	92 days

SURVEILLANCE REQUIREMENTS (continued)

SURVEILLANCE		FREQUENCY
SR 3.3.1.4.4	Perform COMPREHENSIVE FUNCTIONAL TEST.	18 months
SR 3.3.1.4.5	Perform ECCS RESPONSE TIME TEST.	18 months
SR 3.3.1.4.6	Perform SENSOR CHANNEL CALIBRATION.	18 months
SR 3.3.1.4.7	Perform CHANNEL FUNCTIONAL TEST.	18 months

Table 3.3.1.4-1 (Page 1 of 7)
ESF Actuation Instrumentation

	FUNCTION	APPLICABLE MODES OR OTHER SPECIFIED CONDITIONS	REQUIRED CHANNELS	APPLICABLE CONDITIONS	SURVEILLANCE REQUIREMENTS	ALLOWABLE VALUE
1.	Low Pressure Core Flooder Actuation.					
1.a	LPFL Pump Discharge Pressure – High.	1,2,3, 4[g],5[g]	1 per pump[a]	C	SR 3.3.1.4.1 SR 3.3.1.4.3 SR 3.3.1.4.4 SR 3.3.1.4.6	≥ (k) MPaG
1.b	LPFL Pump Discharge Flow – Low.	1,2,3, 4[g],5[g]	1 per pump[a]	C	SR 3.3.1.4.1 SR 3.3.1.4.3 SR 3.3.1.4.4 SR 3.3.1.4.6	≤ (k) liters per min
1.c	LPFL System Initiation.	1,2,3, 4[g],5[g]	2 per subsystem[b]	B	SR 3.3.1.4.3 SR 3.3.1.4.4 SR 3.3.1.4.5	NA
1.d	LPFL Device Actuation.	1,2,3, 4[g],5[g]	1 per actuated device[c]	B	SR 3.3.1.4.2 SR 3.3.1.4.4 SR 3.3.1.4.5	NA
1.e	LPFL Manual Initiation.	1,2,3, 4[g],5[g]	2 per subsystem[d]	F	SR 3.3.1.4.3 SR 3.3.1.4.4 SR 3.3.1.4.7	NA
2.	High Pressure Core Flooder Actuation.					
2.a	HPCF Pump Discharge Pressure – High.	1,2,3, 4[g],5[g]	1 per pump[a]	C	SR 3.3.1.4.1 SR 3.3.1.4.3 SR 3.3.1.4.4 SR 3.3.1.4.6	≥ (k) MPaG
2.b	HPCF Pump Discharge Flow – Low.	1,2,3, 4[g],5[g]	1 per pump[a]	C	SR 3.3.1.4.1 SR 3.3.1.4.3 SR 3.3.1.4.4 SR 3.3.1.4.6	≤ (k) liters per min
2.c	HPCF Pump Suction Pressure – Low.	1,2,3, 4[g],5[g]	1 per pump[a]	C	SR 3.3.1.4.1 SR 3.3.1.4.3 SR 3.3.1.4.4 SR 3.3.1.4.6	≥ (k) MPaG
2.d	HPCF System Initiation.	1,2,3, 4[g],5[g]	2 per subsystem[b]	B	SR 3.3.1.4.3 SR 3.3.1.4.4 SR 3.3.1.4.5	NA

Table 3.3.1.4-1 (Page 2 of 7)
ESF Actuation Instrumentation

	FUNCTION	APPLICABLE MODES OR OTHER SPECIFIED CONDITIONS	REQUIRED CHANNELS	APPLICABLE CONDITIONS	SURVEILLANCE REQUIREMENTS	ALLOWABLE VALUE
2.e	HPCF Device Actuation.	1,2,3, 4[g],5[g]	1 per actuated device[c]	B	SR 3.3.1.4.2 SR 3.3.1.4.4 SR 3.3.1.4.5	NA
2.f	HPCF B Manual Initiation.	1,2,3, 4[g],5[g]	2[d]	F	SR 3.3.1.4.3 SR 3.3.1.4.4 SR 3.3.1.4.7	NA
2.g	HPCF C Diverse Logic Manual Initiation.	1,2,3, 4[g],5[g]	1[d]	D	SR 3.3.1.4.3 SR 3.3.1.4.4 SR 3.3.1.4.7	NA
3.	Reactor Core Isolation Cooling System Actuation.					
3.a	RCIC Pump Discharge Pressure – High.	1,2[e],3[e]	1[a]	C	SR 3.3.1.4.1 SR 3.3.1.4.3 SR 3.3.1.4.4 SR 3.3.1.4.6	≥ (k) MPaG
3.b	RCIC Pump Discharge Flow – Low.	1,2[e],3[e]	1[a]	C	SR 3.3.1.4.1 SR 3.3.1.4.3 SR 3.3.1.4.4 SR 3.3.1.4.6	≤ (k) liters per min
3.c	RCIC System Initiation.	1,2[e],3[e]	2[b]	B	SR 3.3.1.4.3 SR 3.3.1.4.4 SR 3.3.1.4.5	NA
3.d	RCIC Device Actuation.	1,2[e],3[e]	1 per actuated device[c]	B	SR 3.3.1.4.2 SR 3.3.1.4.4 SR 3.3.1.4.5	NA
3.e	RCIC Manual Initiation.	1,2[e],3[e]	2[d]	F	SR 3.3.1.4.3 SR 3.3.1.4.4 SR 3.3.1.4.7	NA

Table 3.3.1.4-1 (Page 3 of 7)
ESF Actuation Instrumentation

	FUNCTION	APPLICABLE MODES OR OTHER SPECIFIED CONDITIONS	REQUIRED CHANNELS	APPLICABLE CONDITIONS	SURVEILLANCE REQUIREMENTS	ALLOWABLE VALUE
4.	Automatic Depressurization System.					
4.a	ADS System Initiation.	1, 2[f],3[f]	2 per subsystem[b]	H, I	SR 3.3.1.4.3 SR 3.3.1.4.4	NA
4.b	ADS Device Actuation.	1, 2[f],3[f]	2 per ADS valve[c]	H, I	SR 3.3.1.4.2 SR 3.3.1.4.4 SR 3.3.1.4.5	NA
4.c	ADS Manual Initiation.	1, 2[f],3[f]	2 per subsystem[d]	H, I	SR 3.3.1.4.3 SR 3.3.1.4.4 SR 3.3.1.4.7	NA
4.d	ADS Division I ECCS Pump Discharge Pressure – High (permissive)	1,2[f],3[f]	1 per each of 5 pumps[a]	H, J, K, L, M	SR 3.3.1.4.3 SR 3.3.1.4.4 SR 3.3.1.4.6	≥ (k) MPaG
4.e	ADS Division II ECCS Pump Discharge Pressure – High (permissive)	1,2[f],3[f]	1 per each of 5 pumps[a]	H, J, K, L, M	SR 3.3.1.4.3 SR 3.3.1.4.4 SR 3.3.1.4.6	≥ (k) MPaG
4.f	ATWS Manual ADS Inhibit.	1,2	2 per subsystem[d]	H, I	SR 3.3.1.4.3 SR 3.3.1.4.4 SR 3.3.1.4.7	NA
5.	Diesel-Generator Actuation.					
5.a	Division I, II, & III Loss of Voltage – 4.16 kV.	1,2,3, 4[h],5[h]	1 per phase[a]	C	SR 3.3.1.4.1 SR 3.3.1.4.2 SR 3.3.1.4.3 SR 3.3.1.4.4 SR 3.3.1.4.5 SR 3.3.1.4.6	≥ (k) V and ≤ (k) V for ≥ (k) s and ≤ (k) s
5.b	Division I, II, & III Degraded Voltage – 4.16 kV.	1,2,3, 4[h],5[h]	1 per phase[a]	C	SR 3.3.1.4.1 SR 3.3.1.4.2 SR 3.3.1.4.3 SR 3.3.1.4.4 SR 3.3.1.4.5 SR 3.3.1.4.6	≥ (k) V and ≤ (k) V for ≥ (k) s and ≤ (k) s

Table 3.3.1.4-1 (Page 4 of 7)
ESF Actuation Instrumentation

	FUNCTION	APPLICABLE MODES OR OTHER SPECIFIED CONDITIONS	REQUIRED CHANNELS	APPLICABLE CONDITIONS	SURVEILLANCE REQUIREMENTS	ALLOWABLE VALUE
5.c	DG System Initiation.	1,2,3, 4[h],5[h]	1 per DG[b]	B	SR 3.3.1.4.3 SR 3.3.1.4.4 SR 3.3.1.4.5	NA
5.d	DG Device Actuation.	1,2,3, 4[h],5[h]	1 per actuated device[c]	D	SR 3.3.1.4.2 SR 3.3.1.4.4	NA
5.e	DG Manual Initiation.	1,2,3, 4[h],5[h]	1 per DG[d]	F	SR 3.3.1.4.3 SR 3.3.1.4.4 SR 3.3.1.4.7	NA
6.	Standby Gas Treatment System Actuation.					
6.a	SGTS Initiation.	1,2,3 (i)(j)	1 per subsystem[b]	B	SR 3.3.1.4.3 SR 3.3.1.4.4	NA
6.b	SGTS Device Actuation.	1,2,3 (i)(j)	1 per actuated device[c]	D	SR 3.3.1.4.2 SR 3.3.1.4.4	NA
7.	Reactor Building Cooling Water/Service Water Actuation.					
7.a	RCW/RSW System Initiation.	1,2,3, 4[g],5[g]	1 per subsystem[b]	B	SR 3.3.1.4.3 SR 3.3.1.4.4	NA
7.b	RCW/RSW Device Actuation.	1,2,3, 4[g],5[g]	1 per actuated device[c]	D	SR 3.3.1.4.2 SR 3.3.1.4.4	NA
7.c	RCW/RSW Manual Initiation.	1,2,3, 4[g],5[g]	1 per subsystem[d]	F	SR 3.3.1.4.3 SR 3.3.1.4.4 SR 3.3.1.4.7	NA
7.d	Division I, II, & III Loss of Voltage - 4.16 kV.	1,2,3, 4[h],5[h]	1 per phase[a]	C	SR 3.3.1.4.1 SR 3.3.1.4.2 SR 3.3.1.4.3 SR 3.3.1.4.4 SR 3.3.1.4.5 SR 3.3.1.4.6	≥ (k) V and ≤ (k) V for ≥ (k) s and ≤ (k) s

Table 3.3.1.4-1 (Page 5 of 7)
ESF Actuation Instrumentation

	FUNCTION	APPLICABLE MODES OR OTHER SPECIFIED CONDITIONS	REQUIRED CHANNELS	APPLICABLE CONDITIONS	SURVEILLANCE REQUIREMENTS	ALLOWABLE VALUE
7.e	Division I, II, & III Degraded Voltage - 4.16 kV.	1,2,3, 4[h],5[h]	1 per phase[a]	C	SR 3.3.1.4.1 SR 3.3.1.4.2 SR 3.3.1.4.3 SR 3.3.1.4.4 SR 3.3.1.4.5 SR 3.3.1.4.6	≥ (k) V and ≤ (k) V for ≥ (k) s and ≤ (k) s
8.	Containment Atmospheric Monitoring.					
8.a	CAM System Initiation.	1,2,3	1 per subsystem[b]	B	SR 3.3.1.4.3 SR 3.3.1.4.4	NA
8.b	CAM Device Actuation.	1,2,3	1 per actuated device[c]	D	SR 3.3.1.4.2 SR 3.3.1.4.4	NA
9.	Suppression Pool Cooling Actuation.					
9.a	SPC System Initiation.	1,2,3, 4[g],5[g]	1 per subsystem[b]	B	SR 3.3.1.4.3 SR 3.3.1.4.4	NA
9.b	SPC Device Actuation.	1,2,3, 4[g],5[g]	1 per actuated device[c]	D	SR 3.3.1.4.2 SR 3.3.1.4.4	NA
9.c	SPC Manual Initiation.	1,2,3, 4[g],5[g]	1 per subsystem[d]	F	SR 3.3.1.4.3 SR 3.3.1.4.4 SR 3.3.1.4.7	NA
10.	Containment Isolation Valves Actuation.					
10.a	CIV System Initiation.	1,2,3	1 per division[b]	B	SR 3.3.1.4.3 SR 3.3.1.4.4	NA
10.b	CIV Device Actuation.	1,2,3	1 per actuated device[c]	D	SR 3.3.1.4.2 SR 3.3.1.4.4	NA
10.c	Drywell Sump Drain LCW Radiation – High	1,2,3	1[a]	E	SR 3.3.1.4.3 SR 3.3.1.4.4 SR 3.3.1.4.6	≤ (k) gray

Table 3.3.1.4-1 (Page 6 of 7)
ESF Actuation Instrumentation

	FUNCTION	APPLICABLE MODES OR OTHER SPECIFIED CONDITIONS	REQUIRED CHANNELS	APPLICABLE CONDITIONS	SURVEILLANCE REQUIREMENTS	ALLOWABLE VALUE
10.d	Drywell Sump Drain HCW Radiation - High	1,2,3	1[a]	E	SR 3.3.1.4.3 SR 3.3.1.4.4 SR 3.3.1.4.6	≤ (k) gray
10.e	RCW Inside Drywell System Isolation Initiation.	1,2,3	2 per division[b]	B	SR 3.3.1.4.3 SR 3.3.1.4.4	NA
10.f	RCW Inside Drywell Isolation Device Actuation.	1,2,3	1 per actuated device[c]	D	SR 3.3.1.4.2 SR 3.3.1.4.4	NA
10.g	Exhaust Air Radiation – High Isolation Initiation.	1,2,3, (i),(j)	1 per division[b]	B	SR 3.3.1.4.3 SR 3.3.1.4.4	NA
10.h	Exhaust Air Radiation – High Isolation Device Actuation.	1,2,3. (i),(j)	1 per actuated device[c]	D	SR 3.3.1.4.2 SR 3.3.1.4.4	NA
11.	CIV Divisional Manual Initiation.	1,2,3 (j)	1 per division[d]	F	SR 3.3.1.4.3 SR 3.3.1.4.4 SR 3.3.1.4.7	NA
12.	Reactor Core Isolation Cooling Isolation Actuation.					
12.a	RCIC System Isolation Initiation	1,2,3	1 per division[b]	B	SR 3.3.1.4.3 SR 3.3.1.4.4	NA
12.b	RCIC Isolation Device Actuation.	1,2,3	1 per actuated device[c]	D	SR 3.3.1.4.2 SR 3.3.1.4.4	NA
12.c	RCIC Manual Isolation Initiation.	1,2,3	1 per division[d]	F	SR 3.3.1.4.3 SR 3.3.1.4.4 SR 3.3.1.4.7	NA
12.d	RCIC Turbine Exhaust Pressure-High.	1,2,3	2 per division[a]	I	SR 3.3.1.4.1 SR 3.3.1.4.3 SR 3.3.1.4.4 SR 3.3.1.4.6	≥ (k) MPaG

Table 3.3.1.4-1 (Page 7 of 7)
ESF Actuation Instrumentation

FUNCTION	APPLICABLE MODES OR OTHER SPECIFIED CONDITIONS	REQUIRED CHANNELS	APPLICABLE CONDITIONS	SURVEILLANCE REQUIREMENTS	ALLOWABLE VALUE
13. Reactor Water Cleanup Isolation Actuation.					
13.a CUW System Isolation Initiation.	1,2,3 (i)	1 per division[b]	B	SR 3.3.1.4.3 SR 3.3.1.4.4	NA
13.b CUW Isolation Device Actuation.	1,2,3 (i)	1 per actuated device[c]	D	SR 3.3.1.4.2 SR 3.3.1.4.4	NA
13.c CUW Isolation on SLC Initiation.	1,2	1 per SLC division[a]	E	SR 3.3.1.4.4	NA
14. Shutdown Cooling System Isolation Actuation.					
14.a SD Cooling System Isolation Initiation.	1,2,3, (i)	1 per division[b]	B	SR 3.3.1.4.3 SR 3.3.1.4.4	NA
14.b SD Cooling Isolation Device Actuation.	1,2,3, (i)	1 per actuated device[c]	D	SR 3.3.1.4.2 SR 3.3.1.4.4	NA
15. Feedwater Line Break Mitigation Actuation.					
15.a Feedwater Line Break Mitigation Initiation.	1,2,3	1 per division[b]	B	SR 3.3.1.4.3 SR 3.3.1.4.4 SR 3.3.1.4.5	NA
15.b Feedwater Line Break Mitigation Device Actuation.	1,2,3	1 per actuated device[c]	B	SR 3.3.1.4.2 SR 3.3.1.4.4 SR 3.3.1.4.5	NA

(a) These are SENSOR CHANNEL Functions.
(b) These are LOGIC CHANNEL Functions.
(c) These are OUTPUT CHANNEL Functions.
(d) These are manual channel Functions.
(e) With reactor pressure greater than 1.03 MPaG.
(f) With reactor pressure greater than 0.343 MPaG.
(g) When associated subsystems are required to be operable.
(h) When associated Diesel-Generator is required to be OPERABLE per LCO 3.8.2 “AC Sources – Shutdown”
(i) During CORE ALTERATIONS and operations with the potential for draining the reactor vessel.
(j) During movement of irradiated fuel assemblies in the secondary containment.
(k) In accordance with TS 5.5.2.11, Setpoint Control Program.

3.3 INSTRUMENTATION

3.3.2.1 Startup Range Monitor (SRNM) Instrumentation

LCO 3.3.2.1 The SRNM instrumentation for each Function in Table 3.3.2.1-1 shall be OPERABLE.

APPLICABILITY: According to Table 3.3.2.1-1.

----------NOTE----------
Separate Condition entry is allowed for each channel.

ACTIONS

CONDITION	REQUIRED ACTION	COMPLETION TIME
A. One required channel inoperable in one or more bypass groups.	----------NOTE---------- LCO 3.0.4 is not applicable. ---------- A.1 Place channel in bypass. <u>OR</u> A.2 Place channel in trip.	 1 hour
B. Required Action and associated Completion Time of Condition A not met. <u>OR</u> Four or more required channels inoperable.	B.1 Be in MODE 3.	12 hours
C. One or more required SRNMs inoperable in MODE 3 or 4.	C.1 Fully insert all insertable control rods. <u>AND</u>	1 hour

ACTIONS (continued)

CONDITION	REQUIRED ACTION	COMPLETION TIME
C. (continued)	C.2 Place reactor mode switch in the shutdown position.	1 hour
D. One required SRNM inoperable in MODE 5.	D.1 Suspend CORE ALTERATIONS except for control rod insertion.	Immediately
	AND	
	D.2 Initiate action to insert all insertable control rods in core cells containing one or more fuel assemblies.	Immediately
	And	
	D.3 Initiate action to restore required SRNM to OPERABLE status.	7 days
E. Two required SRNMs inoperable in MODE 5.	E.1 Initiate action to restore one required SRNM to OPERABLE status.	Immediately

SURVEILLANCE REQUIREMENTS

----------NOTE----------
Refer to Table 3.3.2.1-1 to determine which SRs apply for each applicable MOD or other specified conditions.

SURVEILLANCE		FREQUENCY
SR 3.3.2.1.1	Perform CHANNEL CHECK.	12 hours

SURVEILLANCE REQUIREMENTS (continued)

SURVEILLANCE		FREQUENCY
SR 3.3.2.1.2	----------NOTE---------- 1. Only required to be met during CORE ALTERATIONS. 2. Only part a. is required under the conditions specified in footnote (a) of Table 3.3.2.1-1. 3. One SRNM may be used to satisfy more than one of the following. ---------- Verify an OPERABLE SRNM detector is located in: a. The fueled region; b. The core quadrant where CORE ALTERATIONS are being performed when the associated SRNM is included in the fueled region; and c. A core quadrant adjacent to where CORE ALTERATIONS are being performed, when the associated SRNM is included in the fueled region.	12 hours <u>AND</u> Following a change in the core quadrant where CORE ALERATIONS are being performed.
SR 3.3.2.1.3	----------NOTE---------- Not required to be met with four or less fuel assemblies adjacent to the SRNM and no other fuel assemblies in the associated core quadrant. ---------- Verify count rate is ≥ 3.0 cps.	12 hours during CORE ALTERATIONS <u>AND</u> 24 hours

SURVEILLANCE REQUIREMENTS (continued)

SURVEILLANCE		FREQUENCY
SR 3.3.2.1.4	Perform CHANNEL FUNCTIONAL TEST.	7 days
SR 3.3.2.1.5	Perform CHANNEL FUNCTIONAL TEST.	31 days
SR 3.3.2.1.6	----------NOTE---------- Neutron detectors are excluded. ---------- Perform CHANNEL CALIBRATION.	 18 months

Table 3.3.2.1-1 (page 1 of 1)
Startup Range Neutron Monitor Instrumentation

FUNCTION	APPLICABLE MODES OR OTHER SPECIFIED CONDITIONS	REQUIRED CHANNELS	SURVEILLANCE REQUIREMENTS
1. Startup Range Neutron Monitor	2	Group # 1 - 4 Group # 2 - 3 Group # 3 - 3	SR 3.3.2.1.1 SR 3.3.2.1.3 SR 3.3.2.1.5 SR 3.3.2.1.6
	3,4	2	SR 3.3.2.1.1 SR 3.3.2.1.3 SR 3.3.2.1.5 SR 3.3.2.1.6
	5	2[(a),(b)]	SR 3.3.2.1.1 SR 3.3.2.1.2 SR 3.3.2.1.3 SR 3.3.2.1.4 SR 3.3.2.1.6

(a) Only one SRNM channel is required to be OPERABLE during spiral offload or reload when the fueled region includes only that SRNM detector.

(b) Special movable detectors may be used in place of SRNMs if connected to normal SRNM circuits.

3.3 INSTRUMENTATION

3.3.3.1 Essential Communication Function (ECF)

LCO 3.3.3.1 Four divisions of ECF data transmission shall be OPERABLE.

APPLICABILITY: MODES 1, 2, 3, 4, and 5.

----------NOTE----------
Separate Condition entry is allowed for each channel.

ACTIONS

CONDITION	REQUIRED ACTION	COMPLETION TIME
A. One or more data transmission segments inoperable in one ECF division with data transmission maintained.	----------NOTE---------- LCO 3.0.4 is not applicable. ---------- A.1 Restore all data transmission segments to OPERABLE status.	Prior to entering MODE 2 following next MODE 4 entry.
B. One or more data transmission segments inoperable in two or more ECF divisions with data transmission maintained in all divisions.	B.1 Restore all data transmission segments in at least three ECF divisions to OPERABLE status.	30 days
C. Required Actions and associated Completion Times of Condition B not met.	C.1 Verify data transmission capability. AND C.2 Initiate action in accordance with Specification 5.5.2.10.	1 hour AND Once per 24 hours thereafter. Immediately

ACTIONS (continued)

D. One or more ECF divisions inoperable.	----------NOTE---------- LCO 3.0.4 is not applicable. ---------- D.1 Declare affected Functions and supported Features inoperable.	 4 hours

SURVEILLANCE REQUIREMENTS

SURVEILLANCE		FREQUENCY
SR 3.3.3.1.1	Verify the required data transmission path segments are OPERABLE.	92 days
SR 3.3.3.1.2	Perform a comprehensive network performance test.	18 months

3.3 INSTRUMENTATION

3.3.4.1 Anticipated Transient Without Scram (ATWS) and End-of-Cycle Recirculation Pump Trip (EOC-RPT) Instrumentation

LCO 3.3.4.1 The channels for each Function listed in Table 3.3.4.1-1 shall be OPERABLE.

APPLICABILITY: According to Table 3.3.4.1-1.

----------NOTE----------
Separate Condition entry is allowed for each channel.

ACTIONS

CONDITION	REQUIRED ACTION	COMPLETION TIME
A. One or more Functions with one inoperable channel.	----------NOTE---------- Applies only to Functions 1, 3, 5, 11, and 14 in Table 3.3.4.1-1. ----------	
	A.1.1 Place channel(s) in bypass.	6 hours
	AND	
	A.1.2.1 Restore channel(s) to OPERABLE status.	14 days
	OR	
	A.1.2.2 Place channel(s) in trip.	14 days
	OR	
	A.2 Place channel(s) in trip.	6 hours

(continued)

ACTIONS (continued)

CONDITION	REQUIRED ACTION	COMPLETION TIME
B. One or more Functions with two or more channels inoperable.	----------NOTE---------- Applies only to Functions 1, 3, 5, 11, and 14 in Table 3.3.4.1-1. ---------- B.1 Restore two channels to OPERABLE status.	72 hours
C. One or more Functions with one channel inoperable.	----------NOTE---------- Applies only to Functions 2, 4, and 9 in Table 3.3.4.1-1. ---------- C.1.1 Place channel(s) in bypass. AND C.1.2.1 Restore channel(s) to OPERABLE status. OR C.1.2.2 Place channel(s) in trip. OR C.2 Place channel(s) in trip.	 6 hours 30 days 30 days 6 hours
D. One or more Functions with two channels inoperable.	----------NOTE---------- Applies only to Functions 2, 4, and 9 in Table 3.3.4.1-1. ---------- D.1 Restore one inoperable channel to OPERABLE status.	72 days

(continued)

ACTIONS (continued)

CONDITION	REQUIRED ACTION	COMPLETION TIME
E. One or more Functions with three or more channels inoperable.	----------NOTE---------- Applies only to Functions 2, 4, and 9 in Table 3.3.4.1-1. ---------- E.1 Restore at least one inoperable channel to OPERABLE status.	24 hours
F. Required Action and associated Completion Time of Condition C, D, or E not met.	----------NOTE---------- Applies only to Functions 4 in Table 3.3.4.1-1. ---------- F.1 Apply the MCPR limit for inoperable EOC-RPT as specified in the COLR. OR F.2 Reduce power to ≤ 40% RTP.	2 hours 2 hours
G. One or more Functions with one or more channels inoperable.	----------NOTE---------- Applies only to Functions 6, 7, 8, 10, 12, 13, 15, and 16 in Table 3.3.4.1-1. ---------- G.1 Restore channels to OPERABLE status.	24 hours

(continued)

ACTIONS (continued)

CONDITION	REQUIRED ACTION	COMPLETION TIME
H. Required Action and associated Completion Time not met.	H.1 ----------NOTE---------- Applies only to Functions 6, 7, 8, and 16 in Table 3.3.4.1-1. ---------- Declare affected Functions and supported Features inoperable.	Immediately
	OR	
	H.2 ----------NOTE---------- Applies only to Function 1, 2, 3, 5, 9, 10, 12, 13, 14, and 15 in Table 3.3.4.1-1. ---------- Be in MODE 3.	12 hours

SURVEILLANCE REQUIREMENTS

----------NOTE----------

Refer to Table 3.3.4.1-1 to determine the applicability of the SRs to each RPT Function.

SURVEILLANCE		FREQUENCY
SR 3.3.4.1.1	Perform SENSOR CHANNEL CHECK.	12 hours
SR 3.3.4.1.2	Perform CHANNEL FUNCTIONAL TEST.	92 days
SR 3.3.4.1.3	Perform SENSOR CHANNEL CALIBRATION.	18 months
SR 3.3.4.1.4	Perform LOGIC SYSTEM FUNCTIONAL TEST.	18 months
SR 3.3.4.1.5	Verify the RPT SYSTEM RESPONSE TIME is within limits.	18 months
SR 3.3.4.1.6	Perform COMPREHENSIVE FUNCTIONAL TEST.	18 months
SR 3.3.4.1.7	Perform CHANNEL FUNCTIONAL TEST	7 days

Table 3.3.4.1-1 (page 1 of 2)
ATWS and EOC-RPT Instrumentation

FUNCTION	REQUIRED CHANNELS	APPLICABLE MODES OR OTHER SPECIFIED CONDITIONS	SURVEILLANCE REQUIREMENTS	ALLOWABLE VALUES
1. Feedwater Reactor Vessel Water Level-Low, Level 3.	3	1,2	SR 3.3.4.1.1 SR 3.3.4.1.2 SR 3.3.4.1.3 SR 3.3.4.1.4 SR 3.3.4.1.5	≥ (b) cm
2. Reactor Water Vessel Level-Low, Level 2.	4	1,2	SR 3.3.4.1.1 SR 3.3.4.1.2 SR 3.3.4.1.3 SR 3.3.4.1.4 SR 3.3.4.1.5 SR 3.3.4.1.6	≥ (b) cm
3. SB&PC Reactor Steam Dome Pressure – High.	3	1,2	SR 3.3.4.1.1 SR 3.3.4.1.2 SR 3.3.4.1.3 SR 3.3.4.1.4 SR 3.3.4.1.5	≤ (b) MPaG
4. EOC-RPT Initiation	4	≥ 40% RTP.	SR 3.3.4.1.2 SR 3.3.4.1.5 SR 3.3.4.1.6	NA
5. RPT Trip Initiation Function of the RFC.	3	1,2	SR 3.3.4.1.2 SR 3.3.4.1.4	NA
6. ASD Pump Trip Actuation.	1 per ASD	1,2	SR 3.3.4.1.4	NA
7. ASD Pump Trip Timers.	1 per ASD	1,2	SR 3.3.4.1.3 SR 3.3.4.1.4	footnote [(a)]
8. ASD Pump Trip Load Interruption	1 per ASD	1,2	SR 3.3.4.1.4	NA
9. RPS Scram Follow Signal.	4	1,2	SR 3.3.4.1.2 SR 3.3.4.1.4 SR 3.3.4.1.6	NA
10. Manual ATWS-ARI/SLCS Initiation.	2	1,2	SR 3.3.4.1.4 SR 3.3.4.1.7	NA
11. ATWS-ARI Trip Initiation Function of the RFC.	3	1,2	SR 3.3.4.1.4	NA
12. ATWS-FMCRD Initiation Function of the RCIS.	2	1,2	SR 3.3.4.1.4	NA

Table 3.3.4.1-1 (page 2 of 2)
ATWS and EOC-RPT Instrumentation

FUNCTION	REQUIRED CHANNELS	APPLICABLE MODES OR OTHER SPECIFIED CONDITIONS	SURVEILLANCE REQUIREMENTS	ALLOWABLE VALUES
13. FMCRD Insertion Confirmatory Logic.	1	1,2	SR 3.3.4.1.4	
14. ATWS-ARI Valve Actuation.	3	1,2	SR 3.3.4.1.4	NA
15. FMCRD Emergency Insertion Invertor Control Logic.	1 per rod	1,2	SR 3.3.4.1.4	NA
16. Recirculation Runback.	1 per pump	1,2	SR 3.3.4.1.4	NA

(a) ≤ 0 seconds for RIPs A, D, F, J, B, E, & H and ≤ 6 seconds for RIPs C, G, & K.

(b) In accordance with TS 5.5.2.11, “Setpoint Control Program.”

3.3 INSTRUMENTATION

3.3.4.2 Feedwater Pump and Main Turbine Trip Instrumentation

LCO 3.3.4.2 The following feedwater pump and main turbine trip instrumentation shall be OPERABLE:

a. Three instrumentation channels, and

b. Three digital controllers.

APPLICABILITY: THERMAL POWER ≥ 25% RTP.

----------NOTE----------

Separate Condition entry is allowed for each instrumentation channel, or digital controller.

ACTIONS

CONDITION	REQUIRED ACTION	COMPLETION TIME
A. One instrumentation channel inoperable.	A.1 Restore instrumentation channel to OPERABLE status.	14 days
B. One digital controller inoperable.	B.1 Restore digital controller to OPERABLE status.	14 days
C. Two or more instrumentation channels inoperable.	C.1 Restore two instrumentation channels to OPERABLE status.	72 hours
D. Two or more digital controllers inoperable.	D.1 Restore two digital controllers to OPERABLE status.	72 hours
E. Required Action and associated Completion Time not met.	E.1 Reduce THERMAL POWER to < 25% RTP.	4 hours

SURVEILLANCE REQUIREMENTS

SURVEILLANCE		FREQUENCY
SR 3.3.4.2.1	Perform CHANNEL CHECK.	24 hours
SR 3.3.4.2.2	----------NOTE---------- When performing the FUNCTIONAL TEST entry into associated Conditions and Required Actions may be delayed up to 2 hours. ---------- Perform CHANNEL FUNCTIONAL TEST.	92 days
SR 3.3.4.2.3	Perform CHANNEL CALIBRATION. The allowable value shall be ≤ (in accordance with TS 5.5.2.11, “Setpoint Control Program”) inches.	18 months
SR 3.3.4.2.4	Perform LOGIC SYSTEM FUNCTIONAL TEST including valve actuation.	18 months

3.3 INSTRUMENTATION

3.3.5.1 Control Rod Block Instrumentation

LCO 3.3.5.1 The control rod block instrumentation for each Function in Table 3.3.5.1-1 shall be OPERABLE.

APPLICABILITY: According to Table 3.3.5.1-1.

ACTIONS

CONDITION	REQUIRED ACTION	COMPLETION TIME
A. One Automated Thermal Limit Monitor (ATLM) channel inoperable.	A.1 Restore channel to OPERABLE status. OR A.2 Verify the thermal limits are met.	72 hours 4 hours AND Once per 4 hours thereafter
B. Two ATLM channels inoperable.	----------NOTE---------- Removal of ATLM block under administrative control is permitted provided manual control of rod movement and thermal limits are verified by a second licensed operator. ---------- B.1 Insert an ATLM block. AND B.2 Verify RCIS blocks control rod movement by attempting to withdraw one rod or one gang of rods.	 Immediately 4 hours AND Once per 4 hours thereafter

ACTIONS (continued)

CONDITION	REQUIRED ACTION	COMPLETION TIME
C. One Rod Worth Minimizer (RWM) channel inoperable.	C.1 Restore channel to OPERABLE status.	72 Hours
D. Two RWM channels inoperable. OR Required Actions and associated Completion Time of Condition C not met.	D.1 Suspend control rod movement, except by scram.	Immediately
E. One or more Reactor Mode Switch - Shutdown Position channels inoperable.	E.1 Suspend control rod withdrawal. AND E.2 Initiate action to fully insert all insertable control rods in core cells containing one or more fuel assemblies.	Immediately Immediately

SURVEILLANCE REQUIREMENTS

----------NOTE----------
Refer to Table 3.3.5.1-1 to determine which SRs apply for each Control Rod Block Function.

SURVEILLANCE		FREQUENCY
SR 3.3.5.1.1	----------NOTE---------- Not required to be performed until 1 hour after THERMAL POWER is > 30% RTP. ---------- Perform CHANNEL FUNCTIONAL TEST.	 92 days

SURVEILLANCE REQUIREMENTS (continued)

SR 3.3.5.1.2	----------NOTE---------- Not required to be performed until 1 hour after any control rod is withdrawn in MODE 2. ---------- Perform CHANNEL FUNCTIONAL TEST.	92 days
SR 3.3.5.1.3	Verify the RWM is not bypassed when THERMAL POWER is ≤ 10% RTP.	18 months
SR 3.3.5.1.4	Verify the ATLM is not bypassed when THERMAL POWER is ≥ 30% RTP.	18 months
SR 3.3.5.1.5	----------NOTE---------- Not required to be performed until 1 hour after reactor mode switch is in the shutdown position. ---------- Perform CHANNEL FUNCTIONAL TEST.	18 months
SR 3.3.5.1.6	Perform CHANNEL CHECK of process parameter and setpoint inputs to the ATLM.	24 hours
SR 3.3.5.1.7	Verify the bypassing and movement of control rods required to be bypassed in the Rod Action and Position Information (RAPI) Subsystem by a second licensed operator or other qualified member of the technical staff.	Prior to and during movement of control rods bypassed in the RAPI Subsystem

Table 3.3.5.1-1 (page 1 of 1)
Control Rod Block Instrumentation

FUNCTION	APPLICABLE MODES OR OTHER SPECIFIED CONDITIONS	REQUIRED CHANNELS	SURVEILLANCE REQUIREMENTS
1. Rod Control & Information System			
a. Automated Thermal Limit Monitor	(a)	2	SR 3.3.5.1.1 SR 3.3.5.1.4 SR 3.3.5.1.6
b. Rod Worth Minimizer	1[(b)], 2[(b)]	2	SR 3.3.5.1.2 SR 3.3.5.1.3
2. Reactor Mode Switch - Shutdown Position	(c)	4	SR 3.3.5.1.5

(a) THERMAL POWER > 30% RTP.

(b) With THERMAL POWER ≤ 10% RTP.

(c) Reactor mode switch in the shutdown position.

3.3 INSTRUMENTATION

3.3.6.1 Post Accident Monitoring (PAM) Instrumentation

LCO 3.3.6.1 The PAM instrumentation for each Function in Table 3.3.6.1-1 shall be OPERABLE.

APPLICABILITY: MODES 1 and 2.

----------NOTE----------
1. LCO 3.0.4 is not applicable.

2. Separate Condition entry is allowed for each Function.

ACTIONS

CONDITION	REQUIRED ACTION	COMPLETION TIME
A. One or more Functions with one required channel inoperable.	A.1 Restore required channel to OPERABLE status.	30 days
B. Required Action and associated Completion Time of Condition A not met.	B.1 Provide alternate method of monitoring, determine the cause of the inoperability, and submit plans and schedule for restoring the instrumentation channels of the Functions to OPERABLE status to the NRC.	14 days
C. One or more Functions with two required channels inoperable.	C.1 Restore at least one inoperable channel to OPERABLE status.	7 days

ACTIONS (continued)

CONDITION	REQUIRED ACTION	COMPLETION TIME
D. Required Action and associated Completion Time of Condition C not met.	D.1 Enter the Condition referenced in Table 3.3.6.1-1 for the channel.	Immediately
E. As required by Required Action D.1 and referenced in Table 3.3.6.1-1.	E.1 Be in MODE 3.	12 hours
F. As required by Required Action D.1 and referenced in Table 3.3.6.1-1.	F.1 Provide alternate method of monitoring, determine the cause of the inoperability, and submit plans and schedule for restoring the instrumentation channels of the Functions to OPERABLE status to the NRC.	14 days

SURVEILLANCE REQUIREMENTS

----------NOTE----------
1. These SRs apply to each Function in Table 3.3.6.1-1.

2. SR 3.3.6.1.1 does not apply to Function 8.

SURVEILLANCE		FREQUENCY
SR 3.3.6.1.1	Perform CHANNEL CHECK.	31 days
SR 3.3.6.1.2	----------NOTE---------- Neutron detectors are excluded. ---------- Perform CHANNEL CALIBRATION.	 18 months

Table 3.3.6.1-1 (page 1 of 1)
Post Accident Monitoring Instrumentation

FUNCTION	REQUIRED CHANNELS	CONDITIONS REFERENCED FROM REQUIRED ACTION E.1
1. Reactor Steam Dome Pressure.	2	E
2. Reactor Vessel Water Level - Wide Range.	2	E
3. Reactor Vessel Water Level - Fuel Zone.	2	E
4. Suppression Pool Water Level.	2	E
5. Containment Pressure.		
5a. Drywell Pressure.	2	E
5b. Wetwell Pressure.	2	E
6. Drywell Area Radiation.	2	F
7. Wetwell Area Radiation.	2	F
8. PCIV Position.	2 per penetration flow path [(a),(b)]	E
9. Startup Range Neutron Monitor - Neutron Flux.	2[(c)]	E
10. Average Power Range Monitor - Neutron Flux.	2[(d)]	E
11. Suppression Pool Water Temperature.	2[(e)]	E
12. Drywell Atmosphere Temperature.	2	E
13. Wetwell Atmosphere Temperature.	2	E

(a) Only one position indication channel is required for penetration flow paths with only one installed control room indication channel.

(b) Not required for isolation valves whose associated penetration flow path is isolated by at least one closed and de-activated automatic valve, closed manual valve, blind flange, or check valve with flow through the valve secured.

(c) When power is ≤ 10% RTP

(d) When power is > 10% RTP

(e) Bulk average temperature.

3.3 INSTRUMENTATION

3.3.6.2 Remote Shutdown System

LCO 3.3.6.2 The Remote Shutdown System (RSS) instrumentation for each Function listed in Table 3.3.6.2-1 shall be OPERABLE.

APPLICABILITY: MODES 1 and 2.

----------NOTE----------
1. LCO 3.0.4. is not applicable.

2. Separate Condition entry is allowed for each Function.

ACTIONS

CONDITION	REQUIRED ACTION	COMPLETION TIME
A. One RSS division with one or more required Functions inoperable.	A.1 Restore required Functions to OPERABLE status.	90 days
B. Two RSS divisions with one or more required Functions inoperable.	B.1 Restore required Functions to OPERABLE status.	30 days
C. Required Action and associated Completion Time not met.	C.1 Be in MODE 3.	12 hours

SURVEILLANCE REQUIREMENTS

SURVEILLANCE		FREQUENCY
SR 3.3.6.2.1	Perform CHANNEL CHECK for each required instrumentation channel.	31 days
SR 3.3.6.2.2	Verify each required control circuit and transfer switch is capable of performing the intended functions.	18 months
SR 3.3.6.2.3	Perform CHANNEL CALIBRATION for each required instrumentation channel.	18 months

Table 3.3.6.2-1 (page 1 of 1)
Remote Shutdown System Instrumentation

FUNCTION (INSTRUMENT OR CONTROL PARAMETER)	REQUIRED NUMBER OF DIVISIONS
1. Reactor Steam Dome Pressure.	2
2. HPCF B Flow.	1
3. HPCF B Controls.	1(c)
4. HPCF B Pump Discharge Pressure.	1
5. RHR Flow.	2(a)
6. RHR Hx Inlet Temperature.	2(a)
7. RHR Hx Outlet Temperature.	2(a)
8. RHR Hx Bypass Valve Position.	2(a)
9. RHR Hx Outlet Valve Position.	2(a)
10. RHR Pump Discharge Pressure.	2(a)
11. RHR Controls.	2(a)(c)
12. RPV Wide Range Water Level.	2
13. RPV Shutdown Range Water Level.	2
14. Reactor Building Cooling Water Flow.	2
15. Reactor Building Cooling Water Controls.	2(c)
16. Reactor Building Service Water System Controls.	2(c)
17. RSW Strainer Differential Pressure.	2
18. Suppression Pool Water Level.	2
19. Condensate Storage Tank Water Level.	1
20. Suppression Pool Temperature.	2
21. Electric Power Distribution Controls.	2(c)
22. Diesel Generator Interlock and Monitors.	2
23. SRV Controls.	(b)(c)

(a) RHR A for division I RSS panel, RHR B for division II RSS panel.

(b) Three on the Division I RSS, 1 on division II RSS.

(c) The specified number of channels are required to be OPERABLE for each device that can be controlled from the RSS panels.

3.3 INSTRUMENTATION

3.3.7.1 Control Room Habitability Area (CRHA) Emergency Filtration (EF) System Instrumentation

LCO 3.3.7.1 The CRHA EF System instrumentation for each Function in Table 3.3.7.1-1 shall be OPERABLE.

APPLICABILITY:

a. MODES 1, 2, and 3.

b. During movement of irradiated fuel assemblies in the secondary containment.

c. During CORE ALTERATIONS.

d. During operations with a potential for draining the reactor vessel.

----------NOTE----------
Separate Condition entry is allowed for each channel.

ACTIONS

CONDITION	REQUIRED ACTION	COMPLETION TIME
A. One or more EF divisions with one control room ventilation radiation monitor channel inoperable.	A.1 Place channel in trip. OR A.2 Place channel in bypass.	6 hours 6 hours
B. One or more EF divisions with two control room ventilation radiation monitor channels inoperable.	B.1 Place one channel in trip and the other in bypass. AND B.2 Restore one channel to OPERABLE status.	6 hours Prior to completion of next CHANNEL FUNCTIONAL TEST

ACTIONS (continued)

CONDITION	REQUIRED ACTION	COMPLETION TIME
C. Required Action and associated Completion Time of Condition A or B not met. OR One or more EF divisions with one or more Manual Switch channel or low flow actuation channel inoperable. OR One or more EF divisions with 3 or more control room radiation monitor channels inoperable.	C.1 Place the associated EF division in the emergency filtration mode of operation. OR C.2 Declare associated EF division inoperable.	1 hour 1 hour

SURVEILLANCE REQUIREMENTS

----------NOTE----------
Refer to Table 3.3.7.1-1 to determine which SRs apply for each Function.

SURVEILLANCE		FREQUENCY
SR 3.3.7.1.1	Perform CHANNEL CHECK.	24 hours
SR 3.3.7.1.2	Perform CHANNEL FUNCTIONAL TEST.	92 days
SR 3.3.7.1.3	Perform CHANNEL CALIBRATION.	18 months
SR 3.3.7.1.4	Perform LOGIC SYSTEM FUNCTIONAL TEST.	18 months

Table 3.3.7.1-1 (page 1 of 1)
Control Room Habitability Area - Emergency Filtration System Instrumentation

FUNCTION	REQUIRED CHANNELS	SURVEILLANCE REQUIREMENTS	ALLOWABLE VALUE
1. Control Room Ventilation Radiation Monitors	4 per EF division	SR 3.3.7.1.1 SR 3.3.7.1.2 SR 3.3.7.1.3 SR 3.3.7.1.4	≤ (a) mGy/h
2. Emergency Filtration System Low Flow	2 per EF division	SR 3.3.7.1.2 SR 3.3.7.1.3 SR 3.3.7.1.4	≤ (a) kg/h
3. Emergency Filtration System Manual Switch	1 per EF division	SR 3.3.7.1.2 SR 3.3.7.1.4	NA

(a) In accordance with TS 5.5.2.11, "Setpoint Control Program."

3.3 INSTRUMENTATION

3.3.8.1 Electric Power Monitoring

LCO 3.3.8.1 Two Electric Power Monitoring assemblies shall be OPERABLE for each inservice Class 1E Constant Voltage Constant Frequency (CVCF) power supply.

APPLICABILITY: MODES 1, 2, and 3,
MODES 4 and 5 with any control rod withdrawn from a core cell containing one or more fuel assemblies, or with both residual heat removal (RHR) shutdown cooling isolation valves open.

----------NOTE----------
Separate Condition entry is allowed for each CVCF power supply.

ACTIONS

CONDITION	REQUIRED ACTION	COMPLETION TIME
A. One or more inservice CVCF power supplies with one Electric Power Monitoring assembly inoperable.	A.1 Place the associated Electric Power Monitoring assembly circuit breaker in the tripped condition.	1 hour
B. One or more inservice CVCF power supplies with both Electric Power Monitoring assemblies inoperable.	B.1 Remove associated inservice power supply(s) from service.	72 hours
C. Required Action and associated Completion Time of Condition A or B not met in MODE 1, 2, or 3.	C.1 Be in MODE 3. AND C.2 Be in MODE 4.	12 hours 36 hours

ACTIONS (continued)

CONDITION	REQUIRED ACTION		COMPLETION TIME
D. Required Action and associated Completion Time of Condition A or B not met in MODE 4 or 5 with any control rod withdrawn from a core cell containing one or more fuel assemblies or with both RHR shutdown cooling isolation valves open.	D.1	Initiate action to fully insert all insertable control rods in core cells containing one or more fuel assemblies.	Immediately
	AND		
	D.2.1	Initiate action to restore one Electric Power Monitoring assembly to OPERABLE status for inservice power supply(s).	Immediately
	OR		
	D.2.2	Initiate action to isolate the Residual Heat Removal Shutdown Cooling Systems.	Immediately

SURVEILLANCE REQUIREMENTS

SURVEILLANCE		FREQUENCY
SR 3.3.8.1.1	Perform CHANNEL FUNCTIONAL TEST.	92 days
SR 3.3.8.1.2	Perform CHANNEL CALIBRATION. The Allowable Values for Divisions I, II, III, and IV shall be: a. Undervoltage: $\leq$ 108 VAC. b. Overvoltage: $\geq$ 132 VAC. c. Underfrequency: $\leq$ 57 Hz. d. Overfrequency: $\geq$ 63 Hz.	18 months
SR 3.3.8.1.3	Perform SYSTEM FUNCTIONAL TEST.	18 months

3.3 INSTRUMENTATION

3.3.8.2 Reactor Coolant Temperature Monitoring - Shutdown

LCO 3.3.8.2 One Reactor Coolant Temperature Monitoring channel associated with each RHR subsystem operating in the Shutdown Cooling Mode shall be OPERABLE.

APPLICABILITY: When RHR is operating in the Shutdown Cooling Mode.

ACTIONS

CONDITION	REQUIRED ACTION	COMPLETION TIME
A. One or more reactor coolant temperature monitoring channels inoperable.	A.1 Verify at least one RHR subsystem is operating in the Shutdown Cooling Mode. AND A.2 Verify an alternate method of reactor coolant temperature monitoring is available.	Immediately. 1 hour AND Once per 24 hours thereafter.
B. Required Action and associated Completion Time of Condition A not met.	B.1 Initiate action to restore reactor coolant temperature monitoring capability.	Immediately.

SURVEILLANCE REQUIREMENTS

SURVEILLANCE		FREQUENCY
SR 3.3.8.2.1	Perform CHANNEL CHECK.	7 days
SR 3.3.8.2.2	Perform CHANNEL FUNCTIONAL TEST.	92 days
SR 3.3.8.2.3	Perform CHANNEL CALIBRATION.	18 months

3.4 REACTOR COOLANT SYSTEM (RCS)

3.4.1 Reactor Internal Pumps (RIPs) - Operating

LCO 3.4.1 At least nine RIPs shall be in operation.

APPLICABILITY: MODES 1 and 2.

ACTIONS

CONDITION	REQUIRED ACTION	COMPLETION TIME
A. Requirements of the LCO not met.	A.1 Be in MODE 3.	12 hours

SURVEILLANCE REQUIREMENTS

SURVEILLANCE		FREQUENCY
SR 3.4.1.1	Verify at least the required number of RIPs are operating at any THERMAL POWER level.	24 hours

3.4 REACTOR COOLANT SYSTEM (RCS)

3.4.2 Safety/Relief Valves (S/RVs)

LCO 3.4.2 The safety function of twelve S/RVs shall be OPERABLE.

APPLICABILITY: MODES 1, 2, and 3.

ACTIONS

CONDITION	REQUIRED ACTION	COMPLETION TIME
A. One required S/RV inoperable.	A.1 Restore required S/RV to OPERABLE status.	14 days
B. Required Action and associated Completion Time of Condition A not met. OR Two or more required S/RVs inoperable.	B.1 Be in MODE 3. AND B.2 Be in MODE 4.	12 hours 36 hours

SURVEILLANCE REQUIREMENTS

SURVEILLANCE		FREQUENCY
SR 3.4.2.1	Verify the safety function lift setpoints of the required S/RVs are as follows: Number of S/RVs — Setpoint (MPaG) 2 — 7.92 ± 0.0792 4 — 7.99 ± 0.0799 4 — 8.06 ± 0.0806 4 — 8.13 ± 0.0813 4 — 8.19 ± 0.0819 Following testing, lift settings shall be within ± 1%.	In accordance with the Inservice Testing Program
SR 3.4.2.2	----------NOTE---------- Not required to be performed until 12 hours after reactor steam dome pressure is ≥ 6.55 MPaG. ---------- Verify each required S/RV opens when manually actuated.	18 months

3.4 REACTOR COOLANT SYSTEM (RCS)

3.4.3 RCS Operational LEAKAGE

LCO 3.4.3 RCS operational LEAKAGE shall be limited to:

a. No pressure boundary LEAKAGE;

b. ≤ 19 L/min unidentified LEAKAGE;

c. ≤ 114 L/min total LEAKAGE averaged over the previous 24 hour period; and

d. ≤ 8 L/min increase in unidentified LEAKAGE within previous 4 hour period in MODE 1.

APPLICABILITY: MODES 1, 2, and 3.

ACTIONS

CONDITION	REQUIRED ACTION	COMPLETION TIME
A. Unidentified LEAKAGE not within limit. OR Total LEAKAGE not within limit.	A.1 Reduce LEAKAGE to within limits.	4 hours
B. Unidentified LEAKAGE increase not within limit.	B.1 Reduce LEAKAGE to within limits. OR B.2 Verify source of unidentified LEAKAGE increase is not service sensitive type 304 or type 316 austenitic stainless steel.	4 hours

(continued)

ACTIONS (continued)

CONDITION	REQUIRED ACTION	COMPLETION TIME
C. Required Action and associated Completion Time of Condition A or B not met. OR Pressure boundary LEAKAGE exists.	C.1 Be in MODE 3. AND C.2 Be in MODE 4.	12 hours 36 hours

SURVEILLANCE REQUIREMENTS

SURVEILLANCE		FREQUENCY
SR 3.4.3.1	Verify RCS unidentified, total LEAKAGE and unidentified LEAKAGE increase are within limits.	8 hours

3.4 REACTOR COOLANT SYSTEM (RCS)

3.4.4 RCS Pressure Isolation Valve (PIV) Leakage

LCO 3.4.4 The leakage from each RCS PIV shall be within limit.

APPLICABILITY: MODES 1 and 2,
MODE 3, except valves in the residual heat removal (RHR) shutdown cooling flowpath are not required to meet the requirements of this LCO when in the shutdown cooling mode of operation.

ACTIONS

----------NOTES----------

1. Separate Condition entry is allowed for each flow path.

2. Enter applicable Conditions and Required Actions for systems made inoperable by PIVs.

CONDITION	REQUIRED ACTION	COMPLETION TIME
A. Leakage from one or more RCS PIVs not within limit.	----------NOTE---------- Each valve used to satisfy Required Action A.1 and Required Action A.2 shall have been verified to meet SR 3.4.4.1 and be in the reactor coolant pressure boundary. ----------	
	A.1 Isolate the high pressure portion of the affected system from the low pressure portion by use of one closed manual, deactivated automatic, or check valve.	4 hours
	AND	

(continued)

ACTIONS (continued)

CONDITION	REQUIRED ACTION	COMPLETION TIME
A. (continued)	A.2 Isolate the high pressure portion of the affected system from the low pressure portion by use of a second closed manual, deactivated automatic, or check valve.	72 hours
B. Required Action and associated Completion Time not met.	B.1 Be in MODE 3. AND B.2 Be in MODE 4.	12 hours 36 hours

SURVEILLANCE REQUIREMENTS

SURVEILLANCE		FREQUENCY
SR 3.4.4.1	----------NOTE---------- Not required to be performed in MODE 3. ---------- Verify equivalent leakage of each RCS PIV is ≤ 1.9 L/min per 2.54 cm (nominal inch) of valve size up to a maximum of 19 L/min, at an RCS pressure ≥ 7.17 MPaG and ≤ 7.31 MPaG.	18 months

3.4 REACTOR COOLANT SYSTEM (RCS)

3.4.5 RCS Leakage Detection Instrumentation

LCO 3.4.5 The following RCS leakage detection instrumentation shall be OPERABLE:

a. Drywell floor drain sump monitoring system;

b. The airborne particulate channel of the drywell fission products monitoring system; and

c. The gaseous radioactivity channel of the drywell fission products monitoring system or the drywell air cooler condensate flow monitoring system.

APPLICABILITY: MODES 1, 2, and 3.

ACTIONS

CONDITION	REQUIRED ACTION	COMPLETION TIME
A. Drywell floor drain sump monitoring system inoperable.	----------NOTE---------- LCO 3.0.4 is not applicable. ---------- A.1 Restore drywell floor drain sump monitoring system to OPERABLE status.	30 days
B. Airborne particulate channel of drywell fission products monitoring system inoperable.	----------NOTE---------- LCO 3.0.4 is not applicable. ---------- B.1 Analyze grab samples of drywell atmosphere. <u>AND</u>	Once per 12 hours

(continued)

ACTIONS (continued)

CONDITION	REQUIRED ACTION	COMPLETION TIME
B. (continued)	B.2 Restore airborne particulate channel of drywell fission product monitoring system to OPERABLE status.	30 days
C. Gaseous radioactivity channel of drywell fission products monitoring system inoperable. <u>AND</u> Drywell air cooler condensate flow monitoring system inoperable.	----------NOTE---------- LCO 3.0.4 is not applicable. ---------- C.1 Restore gaseous radioactivity channel of drywell fission products monitoring system to OPERABLE status. <u>OR</u> C.2 Restore drywell air cooler condensate flow monitoring system to OPERABLE status.	 30 days 30 days
D. Required Action and associated Completion Time of Condition A, B, or C not met.	D.1 Be in MODE 3. <u>AND</u> D.2 Be in MODE 4.	12 hours 36 hours
E. All required leakage detection systems inoperable.	E.1 Enter LCO 3.0.3.	Immediately

SURVEILLANCE REQUIREMENTS

SURVEILLANCE		FREQUENCY
SR 3.4.5.1	Perform CHANNEL CHECK of required drywell atmospheric monitoring system.	12 hours
SR 3.4.5.2	Perform CHANNEL FUNCTIONAL TEST of required leakage detection instrumentation.	31 days
SR 3.4.5.3	Perform CHANNEL CALIBRATION of required leakage detection instrumentation.	18 months

3.4 REACTOR COOLANT SYSTEM (RCS)

3.4.6 RCS Specific Activity

LCO 3.4.6 The specific activity of the reactor coolant shall be limited to:

a. DOSE EQUIVALENT I-131 specific activity ≤ 7400 Bq/g; and

b. Gross specific activity ≤ ($3.7 \times 10^6/\bar{E}$) Bq/g.

APPLICABILITY: MODE 1,
MODES 2 and 3 with any main steam line not isolated.

ACTIONS

CONDITION	REQUIRED ACTION	COMPLETION TIME
A. Reactor coolant specific activity > 7400 Bq/g and ≤ 148,000 Bq/g DOSE EQUIVALENT I-131.	----------NOTE---------- LCO 3.0.4 is not applicable. ----------	
	A.1 Determine DOSE EQUIVALENT I-131.	Once per 4 hours
	AND	
	A.2 Restore DOSE EQUIVALENT I-131 to within limits.	48 hours
B. Required Action and associated Completion Time of Condition A not met.	B.1 Determine DOSE EQUIVALENT I-131.	Once per 4 hours
	AND	
OR	B.2.1 Isolate all main steam lines.	12 hours
	OR	
Reactor coolant specific activity > 148,000 Bq/g DOSE EQUIVALENT I-131.	B.2.2.1 Be in MODE 3.	12 hours
	AND	
	B.2.2.2 Be in MODE 4.	36 hours

(continued)

ACTIONS (continued)

CONDITION	REQUIRED ACTION	COMPLETION TIME
C. Reactor coolant specific activity > $(3.7 \times 10^6/\bar{E})$ Bq/g.	C.1 Isolate all main steam lines.	12 hours
	OR	
	C.2.1 Be in MODE 3.	12 hours
	AND	
	C.2.2 Be in MODE 4.	36 hours

SURVEILLANCE REQUIREMENTS

SURVEILLANCE		FREQUENCY
SR 3.4.6.1	Verify reactor coolant gross specific activity is ≤ $(3.7 \times 10^6/\bar{E})$ Bq/g.	7 days
SR 3.4.6.2	----------NOTE---------- Only required to be performed in MODE 1. ----------	
	Verify reactor coolant DOSE EQUIVALENT I-131 specific activity is ≤ 7400 Bq/g.	31 days
SR 3.4.6.3	----------NOTE---------- Not required to be performed until 31 days after a minimum of 2 effective full power days and 20 days of MODE 1 operation have elapsed since the reactor was last subcritical for ≥ 48 hours. ----------	
	Determine $\bar{E}$ from a sample taken in MODE 1 after a minimum of 2 effective full power days and 20 days of MODE 1 operation have elapsed since the reactor was last subcritical for ≥ 48 hours.	184 days

3.4 REACTOR COOLANT SYSTEM (RCS)

3.4.7 Residual Heat Removal (RHR) Shutdown Cooling System – Hot Shutdown

LCO 3.4.7 Three RHR shutdown cooling subsystems shall be OPERABLE, and, with less than 5 reactor internal pumps (RIPs) in operation, at least one RHR shutdown cooling subsystem shall be in operation.

----------NOTES----------

1. All RHR shutdown cooling subsystems and reactor internal pumps may be removed from operation for up to 2 hours per 8 hour period.

2. One RHR shutdown cooling subsystem may be inoperable for up to 2 hours for performance of Surveillances provided one of the remaining RHR shutdown cooling subsystems is OPERABLE.

APPLICABILITY: MODE 3 with reactor steam dome pressure < 0.932 MPaG.

ACTIONS

----------NOTE----------

LCO 3.0.4 is not applicable.

CONDITION	REQUIRED ACTION	COMPLETION TIME
A. One or more required RHR shutdown cooling subsystems inoperable.	A.1 Initiate action to restore required RHR shutdown cooling subsystem(s) to OPERABLE status. AND A.2 Initiate action to be in MODE 4. AND	Immediately Immediately

(continued)

ACTIONS (continued)

CONDITION	REQUIRED ACTION	COMPLETION TIME
A. (continued)	A.3 Verify an alternate method of decay heat removal is available for each required inoperable RHR shutdown cooling subsystem.	1 hour
B. No RHR shutdown cooling subsystem in operation. AND Less than 5 RIPs in operation.	B.1.1 Initiate action to restore one RHR shutdown cooling subsystem to operation. OR B.1.2 Initiate action to restore at least 5 RIPs to operation. AND B.2 Verify reactor coolant circulation by an alternate method. AND B.3 Monitor reactor coolant temperature and pressure.	Immediately Immediately 1 hour from discovery of no reactor coolant circulation AND Once per 12 hours thereafter Once per hour

SURVEILLANCE REQUIREMENTS

SURVEILLANCE		FREQUENCY
SR 3.4.7.1	----------NOTE---------- Not required to be met until 2 hours after reactor steam dome pressure is < 0.932 MPaG. ---------- Verify one RHR shutdown cooling subsystem or at least 5 RIPs are operating.	12 hours

3.4 REACTOR COOLANT SYSTEM (RCS)

3.4.8 Residual Heat Removal (RHR) Shutdown Cooling System – Cold Shutdown

LCO 3.4.8 Three RHR shutdown cooling subsystems shall be OPERABLE, and, with less than 5 reactor internal pumps (RIPs) in operation, at least one RHR shutdown cooling subsystem shall be in operation.

----------NOTES----------

1. All RHR shutdown cooling subsystems and reactor internal pumps may be removed from operation for up to 2 hours per 8 hour period.

2. One RHR shutdown cooling subsystem may be inoperable for up to 2 hours for the performance of Surveillances.

3. One RHR shutdown cooling subsystem may be inoperable after 30 hours from initial entry into MODE 4 from MODE 3.

APPLICABILITY: MODE 4.

ACTIONS

CONDITION	REQUIRED ACTION	COMPLETION TIME
A. One or more required RHR shutdown cooling subsystems inoperable.	A.1 Verify an alternate method of decay heat removal is available for each required inoperable RHR shutdown cooling subsystem.	1 hour <u>AND</u> Once per 24 hours thereafter

(continued)

ACTIONS (continued)

CONDITION	REQUIRED ACTION	COMPLETION TIME
B. No RHR shutdown cooling subsystem in operation. AND Less than 5 RIPs in operation.	B.1 Verify reactor coolant circulating by an alternate method. AND B.2 Monitor reactor coolant temperature and pressure.	1 hour from discovery of no reactor coolant circulation AND Once per 12 hours thereafter Once per hour

SURVEILLANCE REQUIREMENTS

SURVEILLANCE		FREQUENCY
SR 3.4.8.1	Verify one RHR shutdown cooling subsystem or at least 5 RIPs are operating.	12 hours

3.4 REACTOR COOLANT SYSTEM (RCS)

3.4.9 RCS Pressure and Temperature (P/T) Limits

LCO 3.4.9 RCS pressure, RCS temperature, RCS heatup and cooldown rate requirements shall be maintained within the limits specified in the PTLR.

APPLICABILITY: At all times.

ACTIONS

CONDITION	REQUIRED ACTION	COMPLETION TIME
A. ----------NOTE---------- Required Action A.2 shall be completed if this Condition is entered. ---------- Requirements of the LCO not met in MODES 1, 2, and 3.	A.1 Restore parameter(s) to within limits. AND A.2 Determine RCS is acceptable for continued operation.	30 minutes 72 hours
B. Required Action and associated Completion Time of Condition A not met.	B.1 Be in MODE 3. AND B.3 Be in MODE 4.	12 hours 36 hours
C. ----------NOTE---------- Required Action C.2 shall be completed if this Condition is entered. ---------- Requirements of the LCO not met in other than MODES 1, 2, and 3.	C.1 Initiate action to restore parameter(s) to within limits. AND C.2 Determine RCS is acceptable for operation.	Immediately Prior to entering MODE 2 or 3

SURVEILLANCE REQUIREMENTS

SURVEILLANCE		FREQUENCY
SR 3.4.9.1	----------NOTE---------- Only required to be performed during RCS heatup and cooldown operations, and RCS inservice leak and hydrostatic testing. ---------- Verify RCS pressure, RCS temperature, and RCS heatup and cooldown rates are within the limits specified in the PTLR.	30 minutes
SR 3.4.9.2	Verify RCS pressure and RCS temperature are within the criticality limits specified in the PTLR.	Once within 15 minutes prior to control rod withdrawal for the purpose of achieving criticality
SR 3.4.9.3	----------NOTE---------- Only required to be performed when tensioning the reactor vessel head bolting studs. ---------- Verify reactor vessel flange and head flange temperatures are within the limits specified in the PTLR.	30 minutes
SR 3.4.9.4	----------NOTE---------- Not required to be performed until 30 minutes after RCS temperature ≤ 27°C in MODE 4. ---------- Verify reactor vessel flange and head flange temperatures are within the limits specified in the PTLR.	30 minutes

(continued)

SURVEILLANCE REQUIREMENTS (continued)

SURVEILLANCE		FREQUENCY
SR 3.4.9.5	----------NOTE---------- Not required to be performed until 12 hours after RCS temperature ≤ 38°C in MODE 4. ---------- Verify reactor vessel flange and head flange temperatures are within the limits specified in the PTLR.	12 hours

3.4 REACTOR COOLANT SYSTEM (RCS)

3.4.10 Reactor Steam Dome Pressure

LCO 3.4.10 The reactor steam dome pressure shall be ≤ 7.17 MPaG.

APPLICABILITY: MODES 1 and 2.

ACTIONS

CONDITION	REQUIRED ACTION	COMPLETION TIME
A. Reactor steam dome pressure not within limit.	A.1 Restore reactor steam dome pressure to within limit.	15 minutes
B. Required Action and associated Completion Time not met.	B.1 Be in MODE 3.	12 hours

SURVEILLANCE REQUIREMENTS

SURVEILLANCE		FREQUENCY
SR 3.4.10.1	Verify reactor steam dome pressure is ≤ 7.17 MPaG.	12 hours

3.5 EMERGENCY CORE COOLING SYSTEMS (ECCS)

3.5.1 ECCS – Operating

LCO 3.5.1 Each ECCS subsystem and the Automatic Depressurization System (ADS) function of eight safety/relief valves shall be OPERABLE.

APPLICABILITY: MODE 1,
MODES 2 and 3, except ADS valves and RCIC are not required to be OPERABLE with reactor steam dome pressure ≤ 0.343 MPaG for ADS and ≤ 1.03 MPaG for RCIC.

ACTIONS

CONDITION	REQUIRED ACTION	COMPLETION TIME
A. One or two ECCS subsystems inoperable provided RCIC is OPERABLE.	A.1 Restore ECCS subsystem(s) to OPERABLE status.	14 days
B. RCIC inoperable. OR RCIC and any one other ECCS subsystem inoperable.	B.1.1 Verify the CTG is functional by verifying the CTG starts and achieves steady state voltage and frequency in less than 10 minutes. AND B.1.2 Verify the CTG circuit breakers are capable of being aligned to each of the ESF buses OR B.2 Verify the ACIWA mode of RHR(C) subsystem is functional. AND	7 days 7 days AND Once per 8 hours thereafter 7 days

(continued)

ACTIONS (continued)

CONDITION	REQUIRED ACTION	COMPLETION TIME
B. (continued)	B.3 Restore ECCS subsystem(s) to OPERABLE status.	14 days
C. RCIC and any other two ECCS subsystems inoperable provided at least one HPCF subsystem is OPERABLE.	C.1.1.1 Verify the CTG is functional by verifying the CTG starts and achieves steady state voltage and frequency in less than 10 minutes. AND C.1.1.2 Verify the CTG circuit breakers are capable of being aligned to each of the ESF buses. OR C.1.2 Verify the ACIWA mode of RHR(C) subsystem is functional. AND C.2 Restore one ECCS subsystem to OPERABLE status.	72 hours 72 hours AND Once per 8 hours thereafter 72 hours 7 days
D. Any three ECCS subsystems inoperable provided RCIC is OPERABLE.	D.1 Restore one ECCS subsystem to OPERABLE status.	3 days
E. Three high pressure ECCS subsystems inoperable.	E.1 Restore one high pressure ECCS subsystem to OPERABLE status.	12 hours

(continued)

ACTIONS (continued)

CONDITION	REQUIRED ACTION	COMPLETION TIME
F. Required Action and associated Completion Time of Condition A, B, C, D or E not met. OR Any four ECCS subsystems inoperable.	F.1 Be in MODE 3. AND F.2 Be in MODE 4.	12 hours 36 hours
G. ----------NOTE---------- This Condition may exist concurrently with Conditions A through D. ---------- One or two ADS valves inoperable.	G.1 Restore ADS valves to OPERABLE status.	14 days
H. ----------NOTE---------- This Condition may exist concurrently with Conditions A through C. ---------- Three ADS valves inoperable.	H.1 Restore one ADS valve to OPERABLE status.	7 days
I. Four or more ADS valves inoperable. OR Required Action and associated Completion Time of Condition G or H not met.	I.1 Be in MODE 3. AND I.2 Reduce reactor steam dome pressure to ≤ 0.343 MPaG.	12 hours 36 hours

SURVEILLANCE REQUIREMENTS

SURVEILLANCE		FREQUENCY
SR 3.5.1.1	Verify, for each ECCS subsystem, the piping is filled with water from the pump discharge valve to the injection valve.	31 days
SR 3.5.1.2	----------NOTE---------- Low pressure core flooder (LPFL) subsystems may be considered OPERABLE during alignment and operation for decay heat removal with reactor steam dome pressure less than 0.932 MPaG in MODE 3, if capable of being manully realigned and not otherwise inoperable. ---------- Verify each ECCS subsystem manual, power operated, and automatic valve in the flow path, that is not locked, sealed, or otherwise secured in position, is in the correct position.	31 days
SR 3.5.1.3	Verify ADS nitrogen supply pressure is ≥ 1.11 MPaG.	31 days
SR 3.5.1.4	Verify each motor driven ECCS pump develops the specified flow rate against a system head corresponding to the specified reactor pressure. SYSTEM — FLOW RATE — SYSTEM HEAD CORRESPONDING TO A REACTOR PRESSURE OF LPFL — ≥ 954 m^3/h — ≥ 0.275 MPaG HPCF — ≥ 182 m^3/h — ≥ 8.12 MPaG	92 days

(continued)

SURVEILLANCE REQUIREMENTS (continued)

SURVEILLANCE		FREQUENCY
SR 3.5.1.5	----------NOTE---------- Not required to be performed until 12 hours after reactor steam dome pressure is ≥ 6.55 MPaG. ---------- Verify, with RCIC steam supply pressure ≤ 7.07 MPaG and ≥ 6.55 MPaG, the RCIC pump can develop a flow ≥ 182 m^3/h against a system head corresponding to reactor pressure.	92 days
SR 3.5.1.6	----------NOTE---------- Not required to be performed until 12 hours after reactor steam dome pressure is ≥ 1.03 MPaG. ---------- Verify, with RCIC steam supply pressure ≤ 1.14 MPaG, the RCIC pump can develop a flow rate ≥ 182 m^3/h against a system head corresponding to reactor pressure.	18 months
SR 3.5.1.7	----------NOTE---------- Vessel injection may be excluded. ---------- Verify each ECCS subsystem actuates on an actual or simulated automatic initiation signal.	18 months
SR 3.5.1.8	----------NOTE---------- Valve actuation may be excluded. ---------- Verify the ADS actuates on an actual or simulated automatic initiation signal.	18 months

(continued)

SURVEILLANCE REQUIREMENTS (continued)

SURVEILLANCE		FREQUENCY
SR 3.5.1.9	----------NOTE---------- Not required to be performed until 12 hours after reactor steam dome pressure is ≥ 6.55 MPaG. ---------- Verify each ADS valve opens when manually actuated.	18 months

3.5 EMERGENCY CORE COOLING SYSTEMS (ECCS)

3.5.2 ECCS – Shutdown

LCO 3.5.2 Two ECCS subsystems shall be OPERABLE.

APPLICABILITY: MODE 4,
MODE 5 except with the reactor cavity to dryer/separator storage pool gate removed and water level ≥ 7.0 m over the top of the reactor pressure vessel flange.

ACTIONS

CONDITION	REQUIRED ACTION		COMPLETION TIME
A. One required ECCS subsystem inoperable.	A.1	Restore required ECCS subsystem to OPERABLE status.	4 hours
B. Required Action and associated Completion Time of Condition A not met.	B.1	Initiate action to suspend operations with a potential for draining the reactor vessel (OPDRVs).	Immediately
C. Two required ECCS subsystems inoperable.	C.1	Initiate action to suspend OPDRVs.	Immediately
	<u>AND</u>		
	C.2	Restore one ECCS subsystem to OPERABLE status.	4 hours

(continued)

ACTIONS (continued)

CONDITION	REQUIRED ACTION		COMPLETION TIME
D. Required Action C.2 and associated Completion Time not met.	D.1	Initiate action to restore secondary containment to OPERABLE status.	Immediately
	AND		
	D.2	Initiate action to restore one standby gas treatment subsystem to OPERABLE status.	Immediately
	AND		
	D.3	Initiate action to restore one isolation valve and associated instrumentation to OPERABLE status in each secondary containment penetration flow path not isolated.	Immediately

SURVEILLANCE REQUIREMENTS

SURVEILLANCE		FREQUENCY
SR 3.5.2.1	Verify, for each required Low Pressure Core Flooder (LPFL) subsystem, the suppression pool water level is ≥ 7.0 m.	12 hours
SR 3.5.2.2	Verify, for the required High Pressure Core Flooder (HPCF) subsystem, the: a. Suppression pool water level is ≥ 7.0 m, or b. Condensate storage tank water level is ≥ 5.4 m.	12 hours

(continued)

SURVEILLANCE REQUIREMENTS (continued)

SURVEILLANCE		FREQUENCY
SR 3.5.2.3	Verify, for each required ECCS subsystem, the piping is filled with water from the pump discharge valve to the injection valve.	31 days
SR 3.5.2.4	----------NOTE---------- Low Pressure Core Flooder (LPFL) subsystem may be considered OPERABLE during alignment and operation in the decay heat removal shutdown cooling mode, if capable of being manually realigned and not otherwise inoperable. ---------- Verify each required ECCS subsystem manual, power operated, and automatic valve in the flow path, that is not locked, sealed, or otherwise secured in position, is in the correct position.	31 days
SR 3.5.2.5	Verify each required ECCS pump develops the specified flow rate against a system head corresponding to the specified reactor pressure. SYSTEM / FLOW RATE / NO OF PUMPS / SYSTEM HEAD CORRESPONDING TO A REACTOR PRESSURE OF LPFL / $\geq$ 954 m^3/h / 1 / $\geq$ 0.275 MPaG HPCF / $\geq$ 182 m^3/h / 1 / $\geq$ 8.12 MPaG	92 days
SR 3.5.2.6	----------NOTE---------- Vessel injection may be excluded. ---------- Verify each required ECCS subsystem actuates on an actual or simulated automatic initiation signal.	18 months

3.6 CONTAINMENT SYSTEMS

3.6.1.1 Primary Containment

LCO 3.6.1.1 Primary containment shall be OPERABLE.

APPLICABILITY: MODES 1, 2, and 3.

ACTIONS

CONDITION	REQUIRED ACTION	COMPLETION TIME
A. Primary containment inoperable.	A.1 Restore primary containment to OPERABLE status.	1 hour
B. Required Action and associated Completion Time not met.	B.1 Be in MODE 3. AND B.2 Be in MODE 4.	12 hours 36 hours

SURVEILLANCE REQUIREMENTS

SURVEILLANCE		FREQUENCY
SR 3.6.1.1.1	Perform required visual examinations and leakage rate testing except for primary containment air lock testing, in accordance with 10 CFR 50, Appendix J, as modified by approved exemptions. The maximum allowable leakage rate, L_a, is 0.5% of primary containment air weight per day at the calculated peak containment pressure, P_a.	-------NOTE------- SR 3.0.2 is not applicable ---------- In accordance with 10 CFR 50, Appendix J, as modified by approved exemptions
SR 3.6.1.1.2	Verify drywell to suppression chamber differential pressure does not decrease at a rate > 12 mm water gauge per minute tested over a 15 minute period at an initial differential pressure of 0.031 MPaD.	18 months AND -------NOTE------- Only required after two consecutive tests fail and continues until two consecutive tests pass ---------- 9 months

3.6 CONTAINMENT SYSTEMS

3.6.1.2 Primary Containment Air Locks

LCO 3.6.1.2 Two primary containment air locks shall be OPERABLE.

APPLICABILITY: MODES 1, 2, and 3.

ACTIONS

----------NOTES----------

1. Entry and exit is permissible to perform repairs of the affected air lock components.
2. Separate Condition entry is allowed for each air lock.
3. Enter applicable Conditions and Required Actions of LCO 3.6.1.1, “Primary Containment,” when air lock leakage results in exceeding overall containment leakage rate acceptance criteria.

CONDITION	REQUIRED ACTION	COMPLETION TIME
A. One or more primary containment air locks with one primary containment air lock door inoperable.	----------NOTES---------- 1. Required Actions A.1, A.2, and A.3 are not applicable if both doors in the same air lock are inoperable and Condition C is entered. 2. Entry and exit is permissible for 7 days under administrative controls if both air locks are inoperable. ----------	

ACTIONS

CONDITION	REQUIRED ACTION		COMPLETION TIME
A. (continued)	A.1	Verify the OPERABLE door is closed in the affected air lock(s).	1 hour
	AND		
	A.2	Lock the OPERABLE door closed in the affected air lock(s).	24 hours
	AND		
	A.3	----------NOTE---------- Air lock doors in high radiation areas or areas with limited access due to inerting may be verified locked closed by administrative means. ----------	
		Verify the OPERABLE door is locked closed in the affected air lock(s).	Once per 31 days

ACTIONS

CONDITION	REQUIRED ACTION	COMPLETION TIME
B. One or more primary containment air locks with primary containment air lock interlock mechanism inoperable.	----------NOTES---------- 1. Required Actions B.1, B.2, and B.3 are not applicable if both doors in the same air lock are inoperable and Condition C is entered. 2. Entry into and exit from containment is permissible under the control of a dedicated individual. ----------	
	B.1 Verify an OPERABLE door is closed in the affected air lock(s).	1 hour
	AND	
	B.2 Lock an OPERABLE door closed in the affected air lock(s).	24 hours
	AND	
	B.3 ----------NOTE---------- Air lock doors in high radiation areas or areas with limited access due to inerting may be verified locked closed by administrative means. ---------- Verify an OPERABLE door is locked closed in the affected air lock(s).	Once per 31 days

ACTIONS

CONDITION	REQUIRED ACTION		COMPLETION TIME
C. One or more primary containment air locks inoperable for reasons other than Condition A or B.	C.1	Initiate action to evaluate primary containment overall leakage rate per LCO 3.6.1.1, using current air lock test results.	Immediately
	AND		
	C.2	Verify a door is closed in the affected air lock(s).	1 hour
	AND		
	C.3	Restore air lock(s) to OPERABLE status.	24 hours
D. Required Action and associated Completion Time not met.	D.1	Be in MODE 3.	12 hours
	AND		
	D.2	Be in MODE 4.	36 hours

SURVEILLANCE REQUIREMENTS

SURVEILLANCE		FREQUENCY
SR 3.6.1.2.1	----------NOTES---------- 1. An inoperable air lock door does not invalidate the previous successful performance of the overall air lock leakage test. 2. Results shall be evaluated against acceptance criteria of SR 3.6.1.1.1 in accordance with 10 CFR 50, Appendix J, as modified by approved exemptions. ---------- Perform required primary containment air lock leakage rate testing in accordance with 10 CFR 50, Appendix J, as modified by approved exemptions. The acceptance criteria for air lock testing are: a. Overall air lock leakage rate is $\leq$ 0.05 L_a when tested at $\geq P_a$. b. For each door, leakage rate is $\leq$ 0.01 L_a when the gap between the door seals is pressurized to $\geq$ 0.0689 MPaG for at least 15 minutes.	--------NOTE-------- SR 3.0.2 is not applicable ---------- In accordance with 10 CFR 50, Appendix J, as modified by approved exemptions
SR 3.6.1.2.2	----------NOTE---------- Only required to be performed upon entry into primary containment when the primary containment is de-inerted. ---------- Verify only one door in the primary containment air lock can be opened at a time.	184 days

3.6 CONTAINMENT SYSTEMS

3.6.1.3 Primary Containment Isolation Valves (PCIVs)

LCO 3.6.1.3 Each PCIV shall be OPERABLE.

APPLICABILITY: MODES 1, 2, and 3,
When associated instrumentation is required to be OPERABLE per LCO 3.3.1.1, “SSLC Sensor Instrumentation,” and LCO 3.3.1.4, “ESF Actuation Instrumentation.”

ACTIONS

----------NOTES----------

1. Penetration flow paths may be unisolated intermittently under administrative controls.
2. Separate Condition entry is allowed for each penetration flow path.
3. Enter applicable Conditions and Required Actions for systems made inoperable by PCIVs.
4. Enter applicable Conditions and Required Actions of LCO 3.6.1.1, “Primary Containment,” when PCIV leakage results in exceeding overall containment leakage rate acceptance criteria.

CONDITION	REQUIRED ACTION	COMPLETION TIME
A. ----------NOTE---------- Only applicable to penetration flow paths with two PCIVs. ---------- One or more penetration flow paths with one PCIV inoperable except for purge valve leakage, main steam line isolation valve leakage, or hydrostatically tested line leakage, not within limit.	A.1 Isolate the affected penetration flow path by use of at least one closed and de-activated automatic valve, closed manual valve, blind flange, or check valve with flow through the valve secured. AND	4 hours except for main steam line AND 8 hours for main steam line

ACTIONS

CONDITION	REQUIRED ACTION	COMPLETION TIME
A. (continued)	A.2 ----------NOTE---------- Valves and blind flanges in high radiation areas may be verified by use of administrative means. ---------- Verify the affected penetration flow path is isolated.	Once per 31 days for isolation devices outside primary containment, drywell, and steam tunnel <u>AND</u> Prior to entering MODE 2 or 3 from MODE 4, if primary containment was de-inerted while in MODE 4, if not performed within the previous 92 days, for isolation devices inside primary containment
B. ----------NOTE---------- Only applicable to penetration flow paths with two PCIVs. ---------- One or more penetration flow paths with two PCIVs inoperable except for purge valve leakage, main steam isolation valve leakage, or hydrostatically tested line leakage not within limit.	B.1 Isolate the affected penetration flow path by use of at least one closed and de-activated automatic valve, closed manual valve, or blind flange.	1 hour

ACTIONS (continued)

CONDITION	REQUIRED ACTION	COMPLETION TIME
C. ----------NOTE---------- Only applicable to penetration flow paths with only one PCIV. ---------- One or more penetration flow paths with one PCIV inoperable.	C.1 Isolate the affected penetration flow path by use of at least one closed and de-activated automatic valve, closed manual valve, or blind flange. AND C.2 ----------NOTE---------- Valves and blind flanges in high radiation areas may be verified by use of administrative means. ---------- Verify the affected penetration flow path is isolated.	4 hours except for excess flow check valves (EFCVs) AND 12 hours for EFCVs Once per 31 days
D. Purge valve leakage rate, main steam isolation valve leakage, or hydrostatically tested line leakage not within limit.	D.1 Restore leakage to within limit.	4 hours except for main steam line isolation valve leakage AND 8 hours for main steam line isolation valve leakage
E. Required Action and associated Completion Time of Condition A, B, C, or D not met in MODE 1, 2, or 3.	E.1 Be in MODE 3. AND E.2 Be in MODE 4.	12 hours 36 hours

ACTIONS (continued)

CONDITION	REQUIRED ACTION		COMPLETION TIME
F. Required Action and associated Completion Time of Condition A, B, or C not met for PCIV(s) required to be OPERABLE during movement of irradiated fuel assemblies in the secondary containment.	F.1	----------NOTE---------- LCO 3.0.3 is not applicable. ---------- Suspend movement of irradiated fuel assemblies in the secondary containment.	Immediately
G. Required Action and associated Completion Time of Condition A, B, or C not met for PCIV(s) required to be OPERABLE during CORE ALTERATIONS.	G.1	Suspend CORE ALTERATIONS.	Immediately
H. Required Action and associated Completion Time of Condition A, B, or C not met for PCIV(s) required to be OPERABLE during MODE 4 or 5 or during operations with a potential for draining the reactor vessel (OPDRVs).	H.1	Initiate action to suspend OPDRVs.	Immediately
	OR		
	H.2	Initiate action to restore valve(s) to OPERABLE status.	Immediately

SURVEILLANCE REQUIREMENTS

SURVEILLANCE		FREQUENCY
SR 3.6.1.3.1	----------NOTES---------- 1. Only required to be met in MODES 1, 2, and 3. 2. Not required to be met when the 550 mm primary containment purge valves are open for inerting, de-inerting, pressure control, ALARA or air quality considerations for personnel entry, or Surveillances that require the valves to be open. ---------- Verify each 550 mm primary containment purge valve is closed.	31 days
SR 3.6.1.3.2	----------NOTES---------- 1. Valves and blind flanges in high radiation areas may be verified by use of administrative means. 2. Not required to be met for PCIVs that are open under administrative controls. ---------- Verify each primary containment isolation manual valve and blind flange that is located outside primary containment and is required to be closed during accident conditions is closed.	31 days

SURVEILLANCE REQUIREMENTS (continued)

SURVEILLANCE		FREQUENCY
SR 3.6.1.3.3	----------NOTES---------- 1. Valves and blind flanges in high radiation areas may be verified by use of administrative means. 2. Not required to be met for PCIVs that are open under administrative controls. ---------- Verify each primary containment isolation manual valve and blind flange that is located inside primary containment and is required to be closed during accident conditions is closed.	Prior to entering MODE 2 or 3 from MODE 4, if primary containment was de-inerted while in MODE 4, if not performed within the previous 92 days
SR 3.6.1.3.4	Verify continuity of the automatic traversing incore probe (ATIP) shear isolation valve explosive charge.	31 days
SR 3.6.1.3.5	Verify the isolation time of each power operated and each automatic PCIV, except MSIVs, is within limits.	In accordance with the Inservice Testing Program
SR 3.6.1.3.6	----------NOTES---------- 1. Only required to be met in MODES 1, 2, and 3. 2. Results shall be evaluated against acceptance criteria of SR 3.6.1.1.1 in accordance with 10 CFR 50, Appendix J, as modified by approved exemptions. ---------- Perform leakage rate testing for each primary containment purge valve with resilient seals.	184 days <u>AND</u> Once within 92 days after opening the valve

SURVEILLANCE REQUIREMENTS (continued)

SURVEILLANCE		FREQUENCY
SR 3.6.1.3.7	Verify the isolation time (i.e., total closure time exclusive of electrical delays) of each MSIV is ≥ 3 seconds and ≤ 4.5 seconds.	3 months
SR 3.6.1.3.8	Verify each automatic PCIV actuates to the isolation position on an actual or simulated isolation signal.	18 months
SR 3.6.1.3.9	Verify each reactor instrumentation line EFCV actuates on a simulated instrument line break to restrict flow to ≤ 1.05 cm^3/s.	18 months
SR 3.6.1.3.10	Remove and test the explosive squib from each shear isolation valve of the ATIP System.	18 months on a STAGGERED TEST BASIS
SR 3.6.1.3.11	----------NOTE---------- 1. Only required to be met in MODES 1, 2, and 3. 2. Results shall be evaluated against acceptance criteria of SR 3.6.1.1.1 in accordance with 10 CFR 50, Appendix J, as modified by approved exemptions. ---------- Verify the combined leakage rate of 0.277 cm^3/hr times the total number of PCIVs through hydrostatically tested lines that penetrate the primary containment is not exceeded when these isolation valves are tested at ≥ 0.294 MPaG.	18 months

SURVEILLANCE REQUIREMENTS (continued)

SURVEILLANCE		FREQUENCY
SR 3.6.1.3.12	Verify leakage rate through each MSIV is ≤ 1 m^3/h when tested at ≥ 0.170 MPaG.	--------NOTE-------- SR 3.0.2 is not applicable ---------- In accordance with 10 CFR 50, Appendix J, as modified by approved exemptions
SR 3.6.1.3.13	----------NOTE---------- Only required to be met in MODES 1, 2, and 3. ---------- Verify each 550 mm primary containment purge valve is blocked to restrict the valve from opening > 50%.	18 months

3.6 CONTAINMENT SYSTEMS

3.6.1.4 Drywell Pressure

LCO 3.6.1.4 Drywell pressure shall be ≤ 5.20 kPaG.

APPLICABILITY: MODES 1, 2, and 3.

ACTIONS

CONDITION	REQUIRED ACTION	COMPLETION TIME
A. Drywell pressure not within limit.	A.1 Restore drywell pressure to within limit.	1 hour
B. Required Action and associated Completion Time not met.	B.1 Be in MODE 3. AND B.2 Be in MODE 4.	12 hours 36 hours

SURVEILLANCE REQUIREMENTS

SURVEILLANCE		FREQUENCY
SR 3.6.1.4.1	Verify drywell pressure is within limit.	12 hours

3.6 CONTAINMENT SYSTEMS

3.6.1.5 Drywell Air Temperature

LCO 3.6.1.5 Drywell average air temperature shall be ≤ 57°C.

APPLICABILITY: MODES 1, 2, and 3.

ACTIONS

CONDITION	REQUIRED ACTION	COMPLETION TIME
A. Drywell average air temperature not within limit.	A.1 Restore drywell average air temperature to within limit.	8 hours
B. Required Action and associated Completion Time not met.	B.1 Be in MODE 3. AND B.2 Be in MODE 4.	12 hours 36 hours

SURVEILLANCE REQUIREMENTS

SURVEILLANCE		FREQUENCY
SR 3.6.1.5.1	Verify drywell average air temperature is within limit.	24 hours

3.6 CONTAINMENT SYSTEMS

3.6.1.6 Wetwell-to-Drywell Vacuum Breakers

LCO 3.6.1.6 Eight wetwell-to-drywell vacuum breakers shall be OPERABLE.

AND

Eight wetwell-to-drywell vacuum breakers shall be closed.

APPLICABILITY: MODES 1, 2, and 3.

ACTIONS

CONDITION	REQUIRED ACTION		COMPLETION TIME
A. One wetwell-to-drywell vacuum breaker inoperable for opening.	A.1	Restore the inoperable vacuum breaker to OPERABLE status.	72 hours
B. One or more wetwell-to-drywell vacuum breaker(s) not closed.	B.1	Verify closure of the vacuum breaker(s) by alternate methods.	12 hours
C. Required Action and associated Completion Time not met.	C.1	Be in MODE 3.	12 hours
	AND		
	C.2	Be in MODE 4.	36 hours

SURVEILLANCE REQUIREMENTS

SURVEILLANCE		FREQUENCY
SR 3.6.1.6.1	----------NOTE---------- Not required to be met for vacuum breakers when performing their intended function. ---------- Verify each vacuum breaker is closed.	14 days <u>AND</u> Within 2 hours after any discharge of steam to the wetwell from the safety/relief valves (S/RVs) or any operation that causes the wetwell-drywell differential pressure to be reduced by ≥ 0.69 kPaD.
SR 3.6.1.6.2	Perform a functional test of each vacuum breaker.	18 months
SR 3.6.1.6.3	Verify each required vacuum breaker fully opens at ≤ 3.43 kPaD.	18 months
SR 3.6.1.6.4	Perform CHANNEL CALIBRATION of vacuum breaker position indication channel.	18 months

3.6 CONTAINMENT SYSTEMS

3.6.2.1 Suppression Pool Average Temperature

LCO 3.6.2.1 Suppression pool average temperature shall be:

a. ≤ 35°C when THERMAL POWER is > 1% RTP and no testing that adds heat to the suppression pool is being performed;

b. ≤ 40.6°C when THERMAL POWER is > 1% RTP and testing that adds heat to the suppression pool is being performed; and

c. ≤ 43.3°C when THERMAL POWER is ≤ 1% RTP.

APPLICABILITY: MODES 1, 2, and 3.

ACTIONS

CONDITION	REQUIRED ACTION	COMPLETION TIME
A. Suppression pool average temperature > 35°C but ≤ 43.3°C. AND THERMAL POWER is > 1% RTP. AND Not performing testing that adds heat to the suppression pool.	A.1 Verify suppression pool average temperature ≤ 43.3°C. AND A.2 Restore suppression pool average temperature to ≤ 35°C.	Once per hour 24 hours

ACTIONS (continued)

CONDITION	REQUIRED ACTION	COMPLETION TIME
B. Required Action and associated Completion Time of Condition A not met.	B.1 Reduce THERMAL POWER to < 1% RTP.	12 hours
C. Suppression pool average temperature > 40.6°C. AND THERMAL POWER > 1% RTP. AND Performing testing that adds heat to the suppression pool.	C.1 Suspend all testing that adds heat to the suppression pool.	Immediately
D. Suppression pool average temperature > 43.3°C.	D.1 Determine suppression pool average temperature. AND D.2 Be in MODE 4.	Once per 30 minutes 36 hours
E. Suppression pool average temperature > 48.9°C.	E.1 Depressurize the reactor vessel to < 1.38 MPaG.	12 hours

SURVEILLANCE REQUIREMENTS

SURVEILLANCE		FREQUENCY
SR 3.6.2.1.1	Verify suppression pool average temperature is within the applicable limits.	24 hours AND 5 minutes when performing testing that adds heat to the suppression pool

3.6 CONTAINMENT SYSTEMS

3.6.2.2 Suppression Pool Water Level

LCO 3.6.2.2 Suppression pool water level shall be ≥ 7 meters and ≤ 7.1 meters.

APPLICABILITY: MODES 1, 2, and 3.

ACTIONS

CONDITION	REQUIRED ACTION	COMPLETION TIME
A. Suppression pool water level not within limits.	A.1 Restore suppression pool water level to within limits.	2 hours
B. Required Action and associated Completion Time not met.	B.1 Be in MODE 3. AND B.2 Be in MODE 4.	12 hours 36 hours

SURVEILLANCE REQUIREMENTS

SURVEILLANCE		FREQUENCY
SR 3.6.2.2.1	Verify suppression pool water level is within limits.	24 hours

3.6 CONTAINMENT SYSTEMS

3.6.2.3 Residual Heat Removal (RHR) Suppression Pool Cooling

LCO 3.6.2.3 Three RHR suppression pool cooling subsystems shall be OPERABLE.

APPLICABILITY: MODES 1, 2, and 3.

ACTIONS

CONDITION	REQUIRED ACTION	COMPLETION TIME
A. One RHR suppression pool cooling subsystem inoperable.	A.1 Restore RHR suppression pool cooling subsystem to OPERABLE status.	14 days
B. Required Action and associated Completion Time of Condition A not met. OR Two or more RHR suppression pool cooling subsystems inoperable.	B.1 Be in MODE 3. AND B.2 Be in MODE 4.	12 hours 36 hours

SURVEILLANCE REQUIREMENTS

SURVEILLANCE		FREQUENCY
SR 3.6.2.3.1	Verify each RHR suppression pool cooling subsystem manual, power operated, and automatic valve in the flow path that is not locked, sealed, or otherwise secured in position is in the correct position or can be aligned to the correct position.	31 days
SR 3.6.2.3.2	Verify each RHR pump develops a flow rate $\geq$ 954 m^3/h through the associated heat exchanger while operating in the suppression pool cooling mode.	92 days

3.6 CONTAINMENT SYSTEMS

3.6.2.4 Residual Heat Removal (RHR) Containment Spray

LCO 3.6.2.4 Two RHR containment spray subsystems shall be OPERABLE.

APPLICABILITY: MODES 1, 2, and 3.

ACTIONS

CONDITION	REQUIRED ACTION	COMPLETION TIME
A. One RHR containment spray subsystem inoperable.	A.1 Verify the ACIWA mode of RHR(C) subsystem is functional. AND A.2 Restore RHR containment spray subsystem to OPERABLE status.	7 days 14 days
B. Two RHR containment spray subsystems inoperable.	B.1 Restore one RHR containment spray subsystem to OPERABLE status.	8 hours
C. Required Action and associated Completion Time not met.	C.1 Be in MODE 3. AND C.2 Be in MODE 4.	12 hours 36 hours

SURVEILLANCE REQUIREMENTS

SURVEILLANCE		FREQUENCY
SR 3.6.2.4.1	Verify each RHR containment spray subsystem manual, power operated, and automatic valve in the flow path that is not locked, sealed, or otherwise secured in position is in the correct position or can be aligned to the correct position.	31 days
SR 3.6.2.4.2	Verify each associated (i.e., in subsystems B & C) RHR pump develops a flow rate $\geq$ 114 m^3/h and < 160 m^3/h through the wetwell spray sparger.	92 days

3.6 CONTAINMENT SYSTEMS

3.6.3.1 Primary Containment Hydrogen Recombiners

Not Used.

3.6 CONTAINMENT SYSTEMS

3.6.3.2 Primary Containment Oxygen Concentration

LCO 3.6.3.2 The primary containment oxygen concentration shall be < 3.5 volume percent.

APPLICABILITY: MODE 1 during the time period:

a. From 24 hours after THERMAL POWER is > 15% RTP following startup, to

b. 24 hours prior to reducing THERMAL POWER to < 15% RTP prior to the next scheduled reactor shutdown.

ACTIONS

CONDITION	REQUIRED ACTION	COMPLETION TIME
A. Primary containment oxygen concentration not within limit.	A.1 Restore oxygen concentration to within limit.	24 hours
B. Required Action and associated Completion Time not met.	B.1 Reduce THERMAL POWER to ≤ 15% RTP.	8 hours

SURVEILLANCE REQUIREMENTS

SURVEILLANCE		FREQUENCY
SR 3.6.3.2.1	Verify primary containment oxygen concentration is within limits.	7 days

3.6 CONTAINMENT SYSTEMS

3.6.4.1 Secondary Containment

LCO 3.6.4.1 The secondary containment shall be OPERABLE.

APPLICABILITY: MODES 1, 2, and 3,
During movement of irradiated fuel assemblies in the secondary containment,
During CORE ALTERATIONS,
During operations with a potential for draining the reactor vessel (OPDRVs).

ACTIONS

CONDITION	REQUIRED ACTION		COMPLETION TIME
A. Secondary containment inoperable in MODE 1, 2, or 3.	A.1	Restore secondary containment to OPERABLE status.	4 hours
B. Required Action and associated Completion Time of Condition A not met.	B.1	Be in MODE 3.	12 hours
	AND		
	B.2	Be in MODE 4.	36 hours
C. Secondary containment inoperable during movement of irradiated fuel assemblies in the secondary containment, during CORE ALTERATIONS, or during OPDRVs.	C.1	----------NOTE---------- LCO 3.0.3 is not applicable. ---------- Suspend movement of irradiated fuel assemblies in the secondary containment.	Immediately
	AND		
	C.2	Suspend CORE ALTERATIONS.	Immediately
	AND		
	C.3	Initiate action to suspend OPDRVs.	Immediately

SURVEILLANCE REQUIREMENTS

SURVEILLANCE		FREQUENCY
SR 3.6.4.1.1	Verify secondary containment vacuum is ≥ 6.4 mm water gauge.	24 hours
SR 3.6.4.1.2	Verify all secondary containment equipment hatches are closed and sealed.	31 days
SR 3.6.4.1.3	Verify each secondary containment access door is closed, except when the access opening is being used for entry and exit, then at least one door shall be closed.	31 days
SR 3.6.4.1.4	Verify each standby gas treatment (SGT) subsystem will draw down the secondary containment to ≥ 6.4 mm water gauge vacuum in ≤ 20 minutes.	18 months on a STAGGERED TEST BASIS
SR 3.6.4.1.5	Verify each SGT subsystem can maintain ≥ 6.4 mm water gauge vacuum in the secondary containment for 1 hour at a flow rate ≤ 6800 m^3/h.	18 months on a STAGGERED TEST BASIS

3.6 CONTAINMENT SYSTEMS

3.6.4.2 Secondary Containment Isolation Valves (SCIVs)

LCO 3.6.4.2 Each SCIV shall be OPERABLE.

APPLICABILITY: MODES 1, 2, and 3,
During movement of irradiated fuel assemblies in the secondary containment,
During CORE ALTERATIONS,
During operations with a potential for draining the reactor vessel (OPDRVs).

ACTIONS

----------NOTES----------

1. Penetration flow paths may be unisolated intermittently under administrative controls.

2. Separate Condition entry is allowed for each penetration flow path.

3. Enter applicable Conditions and Required Actions for systems made inoperable by SCIVs.

CONDITION	REQUIRED ACTION	COMPLETION TIME
A. One or more penetration flow paths with one SCIV inoperable.	A.1 Isolate the affected penetration flow path by use of at least one closed and de-activated automatic valve, closed manual valve, or blind flange. <u>AND</u>	8 hours

ACTIONS

CONDITION	REQUIRED ACTION	COMPLETION TIME
A. (continued)	A.2 ----------NOTE---------- Valves and blind flanges in high radiation areas may be verified by use of administrative means. ---------- Verify the affected penetration flow path is isolated.	Once per 31 days
B. ----------NOTE---------- Only applicable to penetration flow paths with two isolation valves. ---------- One or more penetration flow paths with two SCIVs inoperable.	B.1 Isolate the affected penetration flow path by use of at least one closed and de-activated automatic valve, closed manual valve, or blind flange.	4 hours
C. Required Action and associated Completion Time of Condition A or B not met in MODE 1, 2, or 3.	C.1 Be in MODE 3. AND C.2 Be in MODE 4.	12 hours 36 hours

ACTIONS (continued)

CONDITION	REQUIRED ACTION		COMPLETION TIME
D. Required Action and associated Completion Time of Condition A or B not met during movement of irradiated fuel assemblies in the secondary containment, during CORE ALTERATIONS, or during OPDRVs.	D.1	----------NOTE---------- LCO 3.0.3 is not applicable. ---------- Suspend movement of irradiated fuel assemblies in the secondary containment.	Immediately
	AND		
	D.2	Suspend CORE ALTERATIONS.	Immediately
	AND		
	D.3	Initiate action to suspend OPDRVs.	Immediately

SURVEILLANCE REQUIREMENTS

SURVEILLANCE		FREQUENCY
SR 3.6.4.2.1	----------NOTES---------- 1. Valves and blind flanges in high radiation areas may be verified by use of administrative means. 2. Not required to be met for SCIVs that are open under administrative controls. ---------- Verify each secondary containment isolation manual valve and blind flange that is required to be closed during accident conditions is closed.	31 days
SR 3.6.4.2.2	Verify the isolation time of each power operated and each automatic SCIV is within limits.	92 days

SURVEILLANCE REQUIREMENTS (continued)

SURVEILLANCE		FREQUENCY
SR 3.6.4.2.3	Verify each automatic SCIV actuates to the isolation position on an actual or simulated actuation signal.	18 months

3.6 CONTAINMENT SYSTEMS

3.6.4.3 Standby Gas Treatment (SGT) System

LCO 3.6.4.3 Two SGT trains shall be OPERABLE.

APPLICABILITY: MODES 1, 2, and 3,
During movement of irradiated fuel assemblies in the secondary containment,
During CORE ALTERATIONS,
During operations with a potential for draining the reactor vessel (OPDRVs).

ACTIONS

CONDITION	REQUIRED ACTION	COMPLETION TIME
A. One SGT subsystem inoperable.	A.1 Restore SGT train to OPERABLE status.	7 days
B. Two SGT trains inoperable in MODES 1, 2, or 3.	B.1 Restore one SGT train to OPERABLE status.	4 hours
C. Required Action and associated Completion Time of Condition A or B not met in MODE 1, 2, or 3.	C.1 Be in MODE 3. AND C.2 Be in MODE 4.	12 hours 36 hours

ACTIONS (continued)

D. Required Action and associated Completion Time of Condition A not met during movement of irradiated fuel assemblies in the secondary containment, during CORE ALTERATIONS, or during OPDRVs.	----------NOTE---------- LCO 3.0.3 is not applicable. ---------- D.1 Place OPERABLE SGT train in operation. OR D.2.1 Suspend movement of irradiated fuel assemblies in secondary containment. AND D.2.2 Suspend CORE ALTERATIONS. AND D.2.3 Initiate action to suspend OPDRVs.	 Immediately Immediately Immediately Immediately
E. Two SGT subsystems inoperable during movement of irradiated fuel assemblies in the secondary containment, during CORE ALTERATIONS, or during OPDRVs.	E.1 ----------NOTE---------- LCO 3.0.3 is not applicable. ---------- Suspend movement of irradiated fuel assemblies in secondary containment. AND E.2 Suspend CORE ALTERATIONS. AND E.3 Initiate action to suspend OPDRVs.	 Immediately Immediately Immediately

SURVEILLANCE REQUIREMENTS

SURVEILLANCE		FREQUENCY
SR 3.6.4.3.1	Operate each SGT train for ≥ 10 continuous hours with heaters operating.	31 days
SR 3.6.4.3.2	Perform required SGT filter testing in accordance with the Ventilation Filter Testing Program (VFTP).	In accordance with the VFTP
SR 3.6.4.3.3	Verify each SGT train actuates on an actual or simulated initiation signal.	18 months
SR 3.6.4.3.4	Verify each SGT filter cooler bypass damper can be opened and the fan started.	18 months

3.7 PLANT SYSTEMS

3.7.1 Reactor Building Cooling Water(RCW) System, Reactor Service Water (RSW) System and Ultimate Heat Sink (UHS) – Operating

LCO 3.7.1 Divisions A, B and C of the RCW/RSW System and the UHS shall be OPERABLE.

APPLICABILITY: MODES 1, 2, and 3.

ACTIONS

CONDITION	REQUIRED ACTION	COMPLETION TIME
A. One RCW pump and/or one RSW pump and/or one RCW/RSW heat exchanger and/or one cooling tower cell in the UHS inoperable in a single division.	A.1 Restore pump(s) and/or heat exchanger and/or UHS cooling tower cell to OPERABLE status.	14 days
B. One RCW/RSW division inoperable for reasons other than Condition A. <u>OR</u> Both cooling tower cells in one UHS division inoperable.	B.1 Declare associated supported required feature(s) inoperable and enter applicable Conditions and Required Actions of the LCOs for the inoperable required feature(s). <u>AND</u> B.2 Initiate action to restore RCW/RSW division or both UHS cooling tower cells to OPERABLE status.	Immediately Immediately

ACTIONS (continued)

CONDITION	REQUIRED ACTION	COMPLETION TIME
C. Condition A exists in two or more RCW/RSW or UHS cooling tower divisions.	C.1 Restore one inoperable RCW/RSW or UHS cooling tower division to OPERABLE status.	7 days
D. Required Action and associated Completion Time of Condition A, B or C not met. OR Two or more RCW/RSW divisions inoperable for reasons other than Condition C. OR UHS inoperable. OR Two or more UHS cooling tower divisions inoperable for reasons other than Condition C.	D.1 Be in MODE 3. AND D.2 Be in MODE 4.	12 hours 36 hours

SURVEILLANCE REQUIREMENTS

SURVEILLANCE		FREQUENCY
SR 3.7.1.1	Verify the water level in the UHS basin is ≥ 19.28 m.	24 hours
SR 3.7.1.2	Verify the water level in the UHS basin is ≥ 0.91 m.	24 hours
SR 3.7.1.3	Verify the RSW water temperature at the inlet to the RCW/RSW heat exchangers is ≤ 32.2°C.	24 hours
SR 3.7.1.4	Operate each cooling tower cell fan for ≥ 15 minutes.	31 days
SR 3.7.1.5	----------NOTE---------- Isolation of flow to individual components does not render RCW/RSW System inoperable. ---------- Verify each RCW/RSW division and associated UHS cooling tower division manual, power operated, and automatic valve in the flow path servicing safety related systems or components, that is not locked, sealed, or otherwise secured in position, is in the correct position.	31 days
SR 3.7.1.6	Verify each RCW/RSW division and associated UHS cooling tower division actuate on an actual or simulated initiation signal.	18 months

3.7 PLANT SYSTEMS

3.7.2 Reactor Building Cooling Water (RCW) System, Reactor Service Water (RSW) System and Ultimate Heat Sink (UHS) – Shutdown

LCO 3.7.2 Three RCW/RSW divisions and UHS shall be OPERABLE.

----------NOTE----------
One RCW/RSW division may be inoperable in MODE 5, and after 30 hours from initial entry into MODE 4 from MODE 3.

APPLICABILITY: MODE 4,
MODE 5 with irradiated fuel in the reactor pressure vessel (RPV) and water level < 7.0 m over the top of the reactor pressure vessel flange.

ACTIONS

CONDITION	REQUIRED ACTION	COMPLETION TIME
A. One RCW pump and/or one RSW pump and/or one RCW/RSW heat exchanger and/or one cooling tower cell in the UHS in one required division inoperable.	A.1 Restore pump(s) and/or heat exchanger and/or UHS cooling tower cell to OPERABLE status.	14 days
B. Condition A exists in two or more required RCW/RSW or UHS cooling tower divisions.	B.1 Restore one inoperable RCW/RSW or UHS cooling tower division to OPERABLE status.	7 days

ACTIONS (continued)

CONDITION	REQUIRED ACTION	COMPLETION TIME
C. One or more required RCW/RSW division or UHS cooling tower divisions inoperable for reasons other then Condition A or B. OR UHS inoperable. OR Required Action and associated Completion Time of Condition A or B not met.	C.1 Enter applicable Conditions and Required Actions of LCO 3.8.11, "AC Sources – Shutdown (Low Water Level)" for diesel generator(s) made inoperable by RCW/RSW. AND C.2 Enter applicable Conditions and Required Actions of LCO 3.4.8, "Residual Heat Removal (RHR) – MODE 4," or LCO 3.9.8, "RHR – Low Water Level", for RHR shutdown cooling made inoperable by RCW/RSW.	Immediately Immediately

SURVEILLANCE REQUIREMENTS

SURVEILLANCE		FREQUENCY
SR 3.7.2.1	Verify the water level in the UHS basin is ≥ 19.28 m.	24 hours
SR 3.7.2.2	Verify the water level in the UHS basin is ≥ 0.91 m.	24 hours
SR 3.7.2.3	Verify the RSW water temperature at the inlet to the RCW/RSW heat exchangers is ≤ 32.2°C.	24 hours

SURVEILLANCE REQUIREMENTS (continued)

SURVEILLANCE		FREQUENCY
SR 3.7.2.4	Operate each cooling tower cell fan for ≥ 15 minutes.	31 days
SR 3.7.2.5	----------NOTE---------- Isolation of flow to individual components does not render RCW/RSW System inoperable. ---------- Verify each RCW/RSW division and associated UHS cooling tower division manual, power operated, and automatic valve in the flow path servicing safety related systems or components, that is not locked, sealed, or otherwise secured in position, is in the correct position.	31 days
SR 3.7.2.6	Verify each RCW/RSW division and associated UHS cooling tower division actuate on an actual or simulated initiation signal.	18 months

3.7 PLANT SYSTEMS

3.7.3 Reactor Building Cooling Water (RCW) System and Reactor Service Water (RSW) System and Ultimate Heat Sink (UHS) – Refueling

LCO 3.7.3 One RCW/RSW division and UHS shall be OPERABLE.

APPLICABILITY: MODE 5 with irradiated fuel in the reactor pressure vessel and water level ≥ 7.0 m over the top of the reactor pressure vessel flange.

ACTIONS

CONDITION	REQUIRED ACTION	COMPLETION TIME
A. No RCW/RSW division OPERABLE. OR UHS inoperable. OR Associated divisional UHS cooling towers inoperable.	A.1 Enter applicable Conditions and Required Actions of LCO 3.8.2, "AC Sources-Refueling" for the diesel generator made inoperable by RCW/RSW. AND A.2 Enter applicable Conditions and Required Actions of LCO 3.9.7, "RHR-High Water Level", for RHR-Shutdown Cooling made inoperable by RCW/RSW.	Immediately Immediately

SURVEILLANCE REQUIREMENTS

SURVEILLANCE		FREQUENCY
SR 3.7.3.1	Verify the water level in the UHS basin is ≥ 19.28 m.	24 hours
SR 3.7.3.2	Verify the water level in the UHS basin is ≥ 0.91 m.	24 hours
SR 3.7.3.3	Verify the RSW water temperature at the inlet to the RCW/RSW heat exchangers is ≤ 32.2°C.	24 hours
SR 3.7.3.4	Operate each cooling tower cell fan for ≥ 15 minutes.	31 days
SR 3.7.3.5	----------NOTE---------- Isolation of flow to individual components does not render RCW/RSW System inoperable. ---------- Verify each RCW/RSW division and associated UHS cooling tower division manual, power operated, and automatic valve in the flow path servicing safety related systems or components, that is not locked, sealed, or otherwise secured in position is in the correct position.	31 days
SR 3.7.3.6	Verify each RCW/RSW division and associated UHS cooling tower division actuate on an actual or simulated initiation signal.	18 months

3.7 PLANT SYSTEMS

3.7.4 Control Room Habitability Area (CRHA) – Emergency Filtration (EF) System

LCO 3.7.4 Two divisions of the CRHA EF Systems shall be OPERABLE.

APPLICABILITY: MODES 1, 2, and 3,
During movement of irradiated fuel assemblies in the secondary containment,
During CORE ALTERATIONS,
During operations with a potential for draining the reactor vessel (OPDRVs).

ACTIONS

CONDITION	REQUIRED ACTION	COMPLETION TIME
A. One EF division inoperable.	A.1 Restore EF division to OPERABLE status.	7 days
B. Required Action and Associated Completion Time of Condition A not met in MODE 1, 2, or 3.	B.1 Be in MODE 3. AND B.2 Be in MODE 4.	12 hours 36 hours

ACTIONS (continued)

CONDITION	REQUIRED ACTION	COMPLETION TIME
C. Required Action and associated Completion Time of Condition A not met during movement of irradiated fuel assemblies in the secondary containment, during CORE ALTERATIONS, or during OPDRVs.	----------NOTE---------- LCO 3.0.3 is not applicable. ---------- C.1 Place OPERABLE EF division in standby mode. <u>OR</u> C.2.1 Suspend movement of irradiated fuel assemblies in the secondary containment. <u>AND</u> C.2.2 Suspend CORE ALTERATIONS. <u>AND</u> C.2.3 Initiate action to suspend OPDRVs.	 Immediately Immediately Immediately Immediately
D. Two EF divisions inoperable in MODE 1, 2, or 3.	D.1 Enter LCO 3.0.3.	Immediately

ACTIONS (continued)

CONDITION	REQUIRED ACTION	COMPLETION TIME
E. Two EF divisions inoperable during movement of irradiated fuel assemblies in the secondary containment, during CORE ALTERATIONS, or during OPDRVs.	----------NOTE---------- LCO 3.0.3 is not applicable. ----------	
	E.1 Suspend movement of irradiated fuel assemblies in the secondary containment.	Immediately
	AND	
	E.2 Suspend CORE ALTERATIONS.	Immediately
	AND	
	E.3 Initiate action to suspend OPDRVs.	Immediately

SURVEILLANCE REQUIREMENTS

SURVEILLANCE		FREQUENCY
SR 3.7.4.1	Operate each EF division for ≥ 10 continuous hours with the heaters operating.	31 days
SR 3.7.4.2	Perform required EF filter testing in accordance with the Ventilation Filter Testing Program (VFTP).	In accordance with the VFTP
SR 3.7.4.3	Verify each EF division actuates on an actual or simulated initiation signal.	18 months
SR 3.7.4.4	Verify each EF division can maintain a positive pressure of ≥ 3.2 mm water gauge relative to the atmosphere during the isolation mode of operation at a flow rate of ≤ 3400 m^3/h.	18 months on a STAGGERED TEST BASIS

3.7 PLANT SYSTEM

3.7.5 Control Room Habitability Area (CRHA) – Air Conditioning (AC) System

LCO 3.7.5 Two divisions of the CRHA AC System shall be OPERABLE.

APPLICABILITY: MODES 1, 2, and 3,
During movement of irradiated fuel assemblies in the secondary containment,
During CORE ALTERATIONS,
During operations with a potential for draining the reactor vessel (OPDRVs).

ACTIONS

CONDITION	REQUIRED ACTION	COMPLETION TIME
A. One AC division inoperable.	A.1 Restore AC division to OPERABLE status.	30 days
B. Required Action and Associated Completion Time of Condition A not met in MODE 1, 2, or 3.	B.1 Be in MODE 3. AND B.2 Be in MODE 4.	12 hours 36 hours
C. Required Action and associated Completion Time of Condition A not met during movement of irradiated fuel assemblies in the secondary containment, during CORE ALTERATIONS, or during OPDRVs.	----------NOTE---------- LCO 3.0.3 is not applicable. ---------- C.1 Place OPERABLE AC division in operation. OR	 Immediately

ACTIONS (continued)

CONDITION	REQUIRED ACTION	COMPLETION TIME
	C.2.1 Suspend movement of irradiated fuel assemblies in the secondary containment. AND C.2.2 Suspend CORE ALTERATIONS. AND C.2.3 Initiate action to suspend OPDRVs.	Immediately Immediately Immediately
D. Two AC divisions inoperable in MODE 1, 2, or 3.	D.1 Enter LCO 3.0.3.	Immediately
E. Two AC divisions inoperable during movement of irradiated fuel assemblies in the secondary containment, during CORE ALTERATIONS, or during OPDRVs.	----------NOTE---------- LCO 3.0.3 is not applicable. ---------- E.1 Suspend movement of irradiated fuel assemblies in the secondary containment. AND E.2 Suspend CORE ALTERATIONS. AND E.3 Initiate action to suspend OPDRVs.	 Immediately Immediately Immediately

SURVEILLANCE REQUIREMENTS

SURVEILLANCE		FREQUENCY
SR 3.7.5.1	Verify each CRHA AC division has the capability to remove the assumed heat load.	18 months
SR 3.7.5.2	Verify each CRHA AC division actuates on an actual or simulated initiation signal.	18 months

3.7 PLANT SYSTEMS

3.7.6 Main Condenser Offgas

LCO 3.7.6 The gross gamma activity rate of the noble gases measured at the offgas recombiner effluent shall be ≤ 14.8 GBq/second after decay of 30 minutes.

APPLICABILITY: MODE 1,
MODES 2 and 3 with any main steam line not isolated and steam jet air ejector (SJAE) in operation.

ACTIONS

CONDITION	REQUIRED ACTION	COMPLETION TIME
A. Gross gamma activity rate of the noble gases not within limit.	A.1 Restore gross gamma activity rate of the noble gases to within limit.	72 hours
B. Required Action and associated Completion Time not met.	B.1 Isolate all main steam lines.	12 hours
	OR	
	B.2 Isolate SJAE.	12 hours
	OR	
	B.3.1 Be in MODE 3.	12 hours
	AND	
	B.3.2 Be in MODE 4.	36 hours

SURVEILLANCE REQUIREMENTS

SURVEILLANCE		FREQUENCY
SR 3.7.6.1	----------NOTE---------- Not required to be performed until 31 days after any main steam line not isolated and SJAE in operation. ---------- Verify the gross gamma activity rate of the noble gases is ≤ 14.8 GBq/second after decay of 30 minutes.	31 days <u>AND</u> Once within 4 hours after a ≥ 50% increase in the nominal steady state fission gas release after factoring out increases due to changes in THERMAL POWER level

3.7 PLANT SYSTEMS

3.7.7 Main Turbine Bypass System

LCO 3.7.7 The Main Turbine Bypass System shall be OPERABLE.

OR

LCO 3.2.2, "MINIMUM CRITICAL POWER RATIO (MCPR)," limits for an inoperable Main Turbine Bypass System, as specified in the Core Operating Limits Report (COLR), are made applicable.

APPLICABILITY: THERMAL POWER ≥ 40% RTP.

ACTIONS

CONDITION	REQUIRED ACTION	COMPLETION TIME
A. Requirements of the LCO not met or Main Turbine Bypass System inoperable.	A.1 Satisfy the requirements of the LCO or restore Main Turbine Bypass System to OPERABLE status.	2 hours
B. Required Action and associated Completion Time not met.	B.1 Reduce THERMAL POWER to ≤ 40% RTP.	4 hours

SURVEILLANCE REQUIREMENTS

SURVEILLANCE		FREQUENCY
SR 3.7.7.1	Perform bypass valve opening test to ≥ 10% position for each turbine bypass valve.	31 days

SURVEILLANCE REQUIREMENTS (continued)

SURVEILLANCE		FREQUENCY
SR 3.7.7.2	Perform a system functional test.	18 months
SR 3.7.7.3	Verify the TURBINE BYPASS SYSTEM RESPONSE TIME is within limits.	18 months

3.7 PLANT SYSTEMS

3.7.8 Fuel Pool Water Level

LCO 3.7.8 The fuel pool water level shall be ≥ 7.0 m over the top of irradiated fuel assemblies seated in the spent fuel storage pool.

APPLICABILITY: During movement of irradiated fuel assemblies in the associated fuel storage pool.

ACTIONS

CONDITION	REQUIRED ACTION	COMPLETION TIME
A. Fuel pool water level not within limit.	A.1 ----------NOTE---------- LCO 3.0.3 is not applicable. ---------- Suspend movement of irradiated fuel assemblies in the associated fuel storage pool(s).	Immediately

SURVEILLANCE REQUIREMENTS

SURVEILLANCE		FREQUENCY
SR 3.7.8.1	Verify the fuel pool water level is ≥ 7.0 m over the top of irradiated fuel assemblies seated in the storage racks.	7 days

3.8 ELECTRICAL POWER SYSTEMS

3.8.1 AC Sources – Operating

LCO 3.8.1 The following AC electrical power sources shall be OPERABLE:

a. Two qualified circuits between the offsite transmission network and the onsite Class 1E AC Electrical Power Distribution System; and

b. Three diesel generators (DGs).

APPLICABILITY: MODES 1, 2, and 3.

ACTIONS

CONDITION	REQUIRED ACTION	COMPLETION TIME
A. One of two offsite AC power sources to one ESF bus inoperable.	A.1 Verify affected ESF bus is powered from the other operable offsite AC circuit.	72 hours AND Once per 8 hours thereafter
	AND	
	A.2 Verify the CTG is functional by verifying the CTG starts and achieves steady state voltage and frequency in less than 10 minutes.	72 hours AND Once per 7 days thereafter
	AND	
	A.3 Verify the CTG circuit breakers are aligned to the affected ESF bus.	72 hours AND Once per 8 hours thereafter
	AND	

ACTIONS (continued)

CONDITION	REQUIRED ACTION		COMPLETION TIME
A. (continued)	A.4	Restore inoperable offsite AC power to affected ESF bus.	30 days
B. One required offsite circuit inoperable.	B.1	Perform SR 3.8.1.1 for OPERABLE required offsite circuit.	1 hour AND Once per 8 hours thereafter
	AND		
	B.2	Declare required feature(s) with no power available from an OPERABLE offsite circuit inoperable when the redundant required feature(s) are inoperable.	24 hours from discovery of no power available from an OPERABLE offsite circuit to one division concurrent with inoperability of redundant required feature(s)
	AND		
	B.3	Verify the combustion turbine generator (CTG) is functional by verifying the CTG starts and achieves steady state voltage and frequency in less than 10 minutes.	72 hours
	AND		
	B.4	Verify the CTG circuit breakers are capable of being aligned to each of ESF buses.	72 hours AND Once per 8 hours thereafter
	AND		

ACTIONS (continued)

CONDITION	REQUIRED ACTION	COMPLETION TIME
B. (continued)	B.5 Restore required offsite circuit to OPERABLE status.	14 days AND 1 day from discovery of two divisions with no power available from an OPERABLE offsite circuit AND 15 days from discovery of failure to meet the LCO
C. ----------NOTE---------- Required Action C.3.1 or C.3.2 shall be completed if this Condition is entered. ---------- One required DG inoperable.	C.1 Perform SR 3.8.1.1 for OPERABLE required offsite circuit(s).	1 hour AND Once per 8 hours thereafter
	AND	
	C.2 Declare required feature(s), supported by the inoperable DG, inoperable when the redundant required features(s) are inoperable.	4 hours from discovery of Condition C concurrent with inoperability of redundant required feature(s)
	AND	
	C.3.1 Determine OPERABLE DG(s) are not inoperable due to common cause failure. OR	24 hours

ACTIONS (continued)

CONDITION	REQUIRED ACTION		COMPLETION TIME
C. (continued)	C.3.2	Perform SR 3.8.1.2 for OPERABLE DG(s).	24 hours
	AND		
	C.4	Verify the combustion turbine generator (CTG) is functional by verifying the CTG starts and achieves steady state voltage and frequency in less than 10 minutes.	72 hours
	AND		
	C.5	Verify the CTG circuit breakers are aligned to the ESF bus associated with the inoperable DG.	72 hours AND Once per 8 hours thereafter
	AND		
	C.6	Restore required DG to OPERABLE status.	14 days AND 15 days from discovery of failure to meet the LCO
D. Two required offsite circuits inoperable.	D.5	Declare required feature(s) inoperable when the redundant required feature(s) are inoperable.	12 hours from discovery of Condition D concurrent with inoperability of redundant required feature(s)
	AND		
	D.2	Restore one required offsite circuit to OPERABLE status.	24 hours

ACTIONS (continued)

CONDITION	REQUIRED ACTION	COMPLETION TIME
E. One required offsite circuit inoperable. <u>AND</u> One required DG inoperable.	----------NOTE---------- Enter applicable Conditions and Required Actions of LCO 3.8.9, "Distribution Systems – Operating," when Condition D is entered with no required AC power source to one division. ----------	
	E.1 Verify the combustion turbine generator (CTG) is functional by verifying the CTG starts and achieves steady state voltage and frequency in less than 10 minutes.	12 hours
	<u>AND</u>	
	E.2 Verify the CTG circuit breakers are aligned to the ESF bus associated with the inoperable DG.	12 hours <u>AND</u> Once per 8 hours thereafter
	<u>AND</u>	
	E.3.1 Restore required offsite circuit to OPERABLE status.	72 hours
	<u>OR</u>	
	E.3.2 Restore required DG to OPERABLE status.	72 hours

ACTIONS (continued)

CONDITION	REQUIRED ACTION		COMPLETION TIME
F. Two required DGs inoperable.	F.1	Verify the combustion turbine generator (CTG) is functional by verifying the CTG starts and achieves steady state voltage and frequency in less than 10 minutes.	2 hours
	AND		
	F.2	Verify the CTG circuit breakers are aligned to one ESF bus associated with an inoperable DG and capable of being aligned to the other ESF bus associated with an inoperable DG.	2 hours AND Once per 8 hours thereafter
	AND		
	F.3	Restore one required DG to OPERABLE status.	72 hours
G. Required Action and Associated Completion Time of Condition A, B, C, D, E or F not met.	G.1	Be in MODE 3.	12 hours
	AND		
	G.2	Be in MODE 4.	36 hours
H. Three or more required AC sources inoperable.	H.1	Enter LCO 3.0.3.	Immediately

SURVEILLANCE REQUIREMENTS

SURVEILLANCE		FREQUENCY
SR 3.8.1.1	Verify correct breaker alignment and indicated power availability for each required offsite circuit.	7 days
SR 3.8.1.2	----------NOTES---------- 1. Performance of SR 3.8.1.7 satisfies this SR. 2. All DG starts may be preceded by an engine prelube period and followed by a warmup period prior to loading. 3. A modified DG start involving idling and gradual acceleration to synchronous speed may be used for this SR as recommended by the manufacturer. When modified start procedures are not used, the time, voltage, and frequency tolerances of SR 3.8.1.7 must be met. ---------- Verify each DG starts from standby conditions and achieves steady state voltage ≥ 3744 V and ≤ 4576 V and frequency ≥ 58.8 Hz and ≤ 61.2 Hz.	As specified in Table 3.8.1-1
SR 3.8.1.3	----------NOTES---------- 1. DG loadings may include gradual loading as recommended by the manufacturer. 2. Momentary transients outside the load range do not invalidate this test. 3. This Surveillance shall be conducted on only one DG at a time. 4. This SR shall be preceded by, and immediately follow, without shutdown, a successful performance of SR 3.8.1.2 or SR 3.8.1.7. ---------- Verify each DG is synchronized and loaded and operates for ≥ 60 minutes at a load ≥ 6480 kW and ≤ 7200 kW.	As specified in Table 3.8.1-1

SURVEILLANCE REQUIREMENTS (continued)

SURVEILLANCE		FREQUENCY
SR 3.8.1.4	Verify each day tank contains ≥ 16,900 liters of fuel oil.	31 days
SR 3.8.1.5	Check for and remove accumulated water from each day tank.	31 days
SR 3.8.1.6	Verify the fuel oil transfer system operates to automatically transfer fuel oil from the storage tank to the day tank.	92 days
SR 3.8.1.7	----------NOTE---------- All DG starts may be preceded by an engine prelube period. ---------- Verify each DG starts from standby condition and achieves, in ≤ 20 seconds, voltage ≥ 3744 V and ≤ 4576 V and frequency ≥ 58.8 Hz and ≤ 61.2 Hz.	184 days
SR 3.8.1.8	----------NOTES---------- 1. This Surveillance shall not be performed in MODE 1 or 2. 2. Credit may be taken for unplanned events that satisfy this SR. ---------- Verify manual transfer of the unit power supply from the normal offsite circuit to each required alternate offsite circuit.	18 months

SURVEILLANCE REQUIREMENTS (continued)

SURVEILLANCE		FREQUENCY
SR 3.8.1.9	----------NOTES---------- 1. This Surveillance shall not be performed in MODE 1 or 2. 2. Credit may be taken for unplanned events that satisfy this SR. ---------- Verify each DG operating at a power factor ≤ 0.9 rejects a load ≥ 589 kW for Division 1 and ≥ 1689 kW for Divisions 2 and 3, and: a. Following load rejection, the frequency is ≤ 66.7 Hz; b. Within 3 seconds following load rejection, the voltage is ≥ 3744 V and ≤ 4576 V; and c. Within 3 seconds following load rejection, the frequency is ≥ 58.8 Hz and ≤ 61.2 Hz.	18 months
SR 3.8.1.10	----------NOTES---------- 1. This Surveillance shall not be performed in MODE 1 or 2. 2. Credit may be taken for unplanned events that satisfy this SR. ---------- Verify each DG operating at a power factor ≤ 0.9 does not trip and voltage is maintained ≤ 4784 V during and following a load rejection of a load ≥ 6480 kW and ≤ 7200 kW.	18 months

SURVEILLANCE REQUIREMENTS (continued)

SURVEILLANCE		FREQUENCY
SR 3.8.1.11	----------NOTES---------- 1. All DG starts may be preceded by an engine prelube period. 2. This Surveillance shall not be performed in MODE 1, 2, or 3. 3. Credit may be taken for unplanned events that satisfy this SR. ---------- Verify on an actual or simulated loss of offsite power signal: a. De-energization of emergency buses; b. Load shedding from emergency buses; and c. DG auto-starts from standby condition and: 1. energizes permanently connected loads in ≤ 20 seconds, 2. sequentially energizes auto-connected shutdown loads, 3. maintains steady state voltage ≥ 3744 V and ≤ 4576 V, 4. maintains steady state frequency ≥ 58.8 Hz and ≤ 61.2 Hz, and 5. supplies permanently connected and auto-connected shutdown loads for ≥ 5 minutes.	18 months

SURVEILLANCE REQUIREMENTS (continued)

SURVEILLANCE		FREQUENCY
SR 3.8.1.12	----------NOTES---------- 1. All DG starts may be preceded by an engine prelube period. 2. This Surveillance shall not be performed in MODE 1 or 2. 3. Credit may be taken for unplanned events that satisfy this SR. ---------- Verify on an actual or simulated Emergency Core Cooling System (ECCS) initiation signal each DG auto-starts from standby condition and: a. In ≤ 20 seconds after auto-start and during tests, achieves voltage ≥ 3744 V and ≤ 4576 V; b. In ≤ 20 seconds after auto-start and during tests, achieves frequency ≥ 58.8 Hz and ≤ 61.2 Hz; c. Operates for ≥ 5 minutes; d. Permanently connected loads remain energized from the offsite power system; and e. Emergency loads are sequentially energized from the offsite power system.	18 months

SURVEILLANCE REQUIREMENTS (continued)

SURVEILLANCE		FREQUENCY
SR 3.8.1.13	----------NOTES---------- 1. This Surveillance shall not be performed in MODE 1, 2, or 3. 2. Credit may be taken for unplanned events that satisfy this SR. ---------- Verify each DG's automatic trips are bypassed on actual or simulated loss of voltage signal on the emergency bus concurrent with an actual or simulated ECCS initiation signal except: a. Engine overspeed; and b. Generator differential current.	18 months
SR 3.8.1.14	----------NOTES---------- 1. Momentary transients outside the load and power factor ranges do not invalidate this test. 2. This Surveillance shall not be performed in MODE 1 or 2. 3. Credit may be taken for unplanned events that satisfy this SR. ---------- Verify each DG operating at a power factor ≤ 0.9, operates for ≥ 24 hours: a. For ≥ 2 hours loaded, ≥ 7560 kW and ≤ 7920 kW; and b. For the remaining hours of the test loaded ≥ 6480 kW and ≤ 7200 kW.	18 months

SURVEILLANCE REQUIREMENTS (continued)

SURVEILLANCE		FREQUENCY
SR 3.8.1.15	----------NOTES---------- 1. This Surveillance shall be performed within 5 minutes of shutting down the DG after the DG has operated ≥ 2 hours loaded ≥ 6480 kW and ≤ 7200 kW. Momentary transients outside of load range do not invalidate this test. 2. All DG starts may be preceded by an engine prelube period. ---------- Verify each DG starts and achieves, in ≤ 20 seconds, voltage ≥ 3744 V and ≤ 4576 V and frequency ≥ 58.8 Hz and ≤ 61.2 Hz.	18 months
SR 3.8.1.16	----------NOTES---------- 1. This Surveillance shall not be performed in MODE 1, 2, or 3. 2. Credit may be taken for unplanned events that satisfy this SR. ---------- Verify each DG: a. Synchronizes with offsite power source while loaded with emergency loads upon a simulated restoration of offsite power; b. Transfers loads to offsite power source; and c. Returns to ready-to-load operation.	18 months

SURVEILLANCE REQUIREMENTS (continued)

SURVEILLANCE		FREQUENCY
SR 3.8.1.17	----------NOTES---------- 1. This Surveillance shall not be performed in MODE 1, 2, or 3. 2. Credit may be taken for unplanned events that satisfy this SR. ---------- Verify, with a DG operating in test mode and connected to its bus, an actual or simulated ECCS initiation signal overrides the test mode by: a. Returning DG to ready-to-load operation; and b. Automatically energizing the emergency load from offsite power.	18 months
SR 3.8.1.18	----------NOTES---------- 1. This Surveillance shall not be performed in MODE 1, 2, or 3. 2. Credit may be taken for unplanned events that satisfy this SR. ---------- Verify interval between each sequenced load block is within ± 10% of design interval for each load sequencer timer.	18 months

SURVEILLANCE REQUIREMENTS (continued)

SURVEILLANCE		FREQUENCY
SR 3.8.1.19	----------NOTES---------- 1. All DG starts may be preceded by an engine prelube period. 2. This Surveillance shall not be performed in MODE 1, 2, or 3. 3. Credit may be taken for unplanned events that satisfy this SR. ---------- Verify, on an actual or simulated loss of offsite power signal in conjunction with an actual or simulated ECCS initiation signal: a. De-energization of emergency buses; b. Load shedding from emergency buses; and c. DG auto-starts from standby condition and: 1. energizes permanently connected loads in ≤ 20 seconds, 2. sequentially energizes auto-connected emergency loads, 3. achieves steady state voltage ≥ 3744 V and ≤ 4576 V, 4. achieves steady state frequency ≥ 58.8 Hz and ≤ 61.2 Hz, and 5. supplies permanently connected and auto-connected emergency loads for ≥ 5 minutes.	18 months

SURVEILLANCE REQUIREMENTS (continued)

SURVEILLANCE		FREQUENCY
SR 3.8.1.20	----------NOTE---------- All DG starts may be preceded by an engine prelube period. ---------- Verify, when started simultaneously from standby condition, each Division 1, 2, and 3 DG achieves, in ≤ 20 seconds, voltage ≥ 3744 V and ≤ 4576 V and frequency ≥ 58.8 Hz and ≤ 61.2 Hz.	10 years during shutdown

Table 3.8.1-1 (page 1 of 1)
Diesel Generator Test Schedule

NUMBER OF FAILURES IN LAST 25 VALID TESTS [(a)]	FREQUENCY
≤ 3	31 days
≥ 4	7 days[(b)] (but ≥ 24 hours)

(a) Criteria for determining number of failures and valid tests shall be in accordance with Regulatory Position C.2.1 of Regulatory Guide 1.9, Revision 3, where the number of tests and failures is determined on a per DG basis.

(b) This test frequency shall be maintained until seven consecutive failure free starts from standby conditions and load and run tests have been performed. If, subsequent to the 7 failure free tests, 1 or more additional failures occur such that there are again 4 or more failures in the last 25 tests, the testing interval shall again be reduced as noted above and maintained until 7 consecutive failure free tests have been performed.

3.8 ELECTRICAL POWER SYSTEMS

3.8.2 AC Sources – Refueling

LCO 3.8.2 The following AC electrical power sources shall be OPERABLE:

a. One qualified circuit between the offsite transmission network and the onsite Class 1E AC electrical power distribution subsystem(s) required by LCO 3.8.10, “Distribution Systems – Shutdown”; and

b. One or more diesel generator(s) (DG) capable of supplying at least one division of the required OPERABLE features via the onsite Class 1E AC electrical power distribution subsystem(s) required by LCO 3.8.10.

APPLICABILITY: MODE 5 with water level in the refueling cavity ≥ 7.0 meters above the reactor pressure vessel flange
During movement of irradiated fuel assemblies in secondary containment.

ACTIONS

CONDITION	REQUIRED ACTION	COMPLETION TIME
A. Required offsite circuit inoperable.	----------NOTE---------- Enter applicable Condition and Required Actions of LCO 3.8.10, with one required division de-energized as a result of Condition A. ---------- A.1 Initiate action to restore required offsite circuit to OPERABLE status supplying power to all required ESF buses. <u>AND</u>	Immediately

ACTIONS (continued)

CONDITION	REQUIRED ACTION	COMPLETION TIME
A. (continued)	A.1.2 Declare affected required feature(s) with no power available from an OPERABLE offsite circuit inoperable.	Immediately
	OR	
	A.2.1 Suspend CORE ALTERATIONS.	Immediately
	AND	
	A.2.2 Suspend movement of irradiated fuel assemblies in secondary containment.	Immediately
	AND	
	A.2.3 Initiate action to suspend operations with a potential for draining the reactor vessel (OPDRVs).	Immediately
	AND	
	A.2.4 Initiate action to restore required offsite circuit to OPERABLE status supplying power to all required ESF buses.	Immediately
B. One or more required DGs inoperable.	B.1 Suspend CORE ALTERATIONS.	Immediately
	AND	
	B.2 Suspend movement of irradiated fuel assemblies in secondary containment.	Immediately
	AND	

ACTIONS (continued)

CONDITION	REQUIRED ACTION	COMPLETION TIME
B. (continued)	B.3 Initiate action to suspend OPDRVs. AND B.4 Initiate action to restore required DG(s) to OPERABLE status.	Immediately Immediately

SURVEILLANCE REQUIREMENTS

SURVEILLANCE		FREQUENCY
SR 3.8.2.1	----------NOTE---------- 1. SR 3.8.1.3 is only required when more than the minimum number of AC sources required by LCO 3.8.2 are available, but at least every six months. 2. SR 3.8.1.12, SR 3.8.1.13, SR 3.8.1.17, and SR 3.8.1.19 are only required when the associated ECCS loads are required to be OPERABLE. ---------- For AC sources required to be OPERABLE, the SRs of Specification 3.8.1, except SR 3.8.1.8, SR 3.8.1.14, and SR 3.8.1.20 are applicable.	In accordance with applicable SRs

3.8 ELECTRICAL POWER SYSTEMS

3.8.3 Diesel Fuel Oil, Lube Oil, and Starting Air

LCO 3.8.3 The stored diesel fuel oil, lube oil, and starting air subsystem shall be within limits for each required diesel generator (DG).

APPLICABILITY: When associated DG is required to be OPERABLE.

ACTIONS

----------NOTE----------
Separate Condition entry is allowed for each DG.

CONDITION	REQUIRED ACTION	COMPLETION TIME
A. One or more DGs with fuel oil level < 380,000 liters and ≥ 350,000 liters in storage tank.	A.1 Restore fuel oil level to within limits.	48 hours
B. One or more DGs with lube oil inventory < 7,300 liters and ≥ 6,700 liters.	B.1 Restore lube oil inventory to within limits.	48 hours
C. One or more DGs with stored fuel oil total particulates not within limit.	C.1 Restore fuel oil total particulates to within limit.	7 days
D. One or more DGs with new fuel oil properties not within limits.	D.1 Restore stored fuel oil properties to within limits.	30 days

ACTIONS (continued)

CONDITION	REQUIRED ACTION	COMPLETION TIME
E. One or more DGs with pressure in at least one starting air receiver < 3,000 kPaG and ≥ 2,700 kPaG.	E.1 Restore starting air receiver pressure to ≥ 3,000 kPaG.	48 hours
F. Required Actions and associated Completion Time not met. OR One or more DGs with diesel fuel oil, lube oil, or starting air subsystem not within limits for reasons other than Condition A, B, C, D, or E.	F.1 Declare associated DG inoperable.	Immediately

SURVEILLANCE REQUIREMENTS

SURVEILLANCE		FREQUENCY
SR 3.8.3.1	Verify each fuel oil storage tank contains ≥ 380,000 liters.	31 days
SR 3.8.3.2	Verify lube oil inventory for each DG is ≥ 7,300 liters.	31 days
SR 3.8.3.3	Verify fuel oil properties of new and stored fuel oil are tested in accordance with, and maintained within the limits of, the Diesel Fuel Oil Testing Program.	In accordance with the Diesel Fuel Oil Testing Program
SR 3.8.3.4	Verify each required DG air start receiver pressure is ≥ 3,000 kPaG.	31 days

SURVEILLANCE REQUIREMENTS (continued)

SURVEILLANCE		FREQUENCY
SR 3.8.3.5	Check for and remove accumulated water from each fuel oil storage tank.	31 days
SR 3.8.3.6	For each fuel oil storage tank: a. Drain the fuel oil; b. Remove the sediment; and c. Clean the tank.	10 years

3.8 ELECTRICAL POWER SYSTEMS

3.8.4 DC Sources – Operating

LCO 3.8.4 The Division I, Division II, Division III, and Division IV DC electrical power subsystems shall be OPERABLE.

APPLICABILITY: MODES 1, 2, and 3.

ACTIONS

CONDITION	REQUIRED ACTION	COMPLETION TIME
A. One DC electrical power subsystem (either Division I, II, or III) inoperable.	A.1 Determine OPERABLE DC electrical subsystems are not inoperable due to common cause failure.	2 hours
	AND	
	A.2 Declare affected required features inoperable.	2 hours
	AND	
	A.3 Verify the combustion turbine generator (CTG) is functional by verifying the CTG starts and achieves steady state voltage and frequency in less than 10 minutes.	12 hours
	AND	
	A.4 Verify the CTG circuit breakers are capable of being aligned to the two unaffected ESF buses.	12 hours AND Once per 8 hours thereafter

ACTIONS (continued)

CONDITION	REQUIRED ACTION		COMPLETION TIME
A. (continued)	A.5	Restore inoperable DC electrical power subsystem to OPERABLE status.	72 hours
B. Division IV DC electrical power subsystem inoperable.	B.1	Determine OPERABLE DC electrical subsystems are not inoperable due to common cause failure.	2 hours
	AND		
	B.2	Declare affected required features inoperable.	2 hours
C. One DC electrical power subsystem (either Division I, II, or III) inoperable.	C.1	Restore inoperable DC electrical power subsystem (other than Division IV) to OPERABLE status.	2 hours
AND	OR		
Division IV DC electrical power subsystem inoperable.	C.2	Restore Division IV DC electrical power subsystem to OPERABLE status.	2 hours
D. Required Action and associated Completion Time not met.	D.1	Be in MODE 3.	12 hours
	AND		
	D.2	Be in MODE 4.	36 hours

SURVEILLANCE REQUIREMENTS

SURVEILLANCE		FREQUENCY
SR 3.8.4.1	Verify battery terminal voltage is ≥ 129 V on float charge.	7 days
SR 3.8.4.2	Verify no visible corrosion at terminals and connectors. OR Verify connection resistance is ≤ 1.5E-4 ohms for inter-cell connections, ≤ 1.5E-4 ohms for inter-rack connections, ≤ 1.5E-4 ohms for inter-tier connections, and ≤ 1.5E-4 ohms for terminal connections.	92 days
SR 3.8.4.3	Verify cells, cell plates, and battery racks show no visual indication of physical damage or abnormal deterioration.	12 months
SR 3.8.4.4	Remove visible corrosion, and verify cell to cell and terminal connections are coated with anti-corrosion material.	12 months
SR 3.8.4.5	Verify connection resistance is ≤ 1.5E-4 ohms for inter-cell connections, ≤ 1.5E-4 ohms for inter-rack connections, ≤ 1.5E-4 ohms for inter-tier connections, and ≤ 1.5E-4 ohms for terminal connections.	12 months
SR 3.8.4.6	----------NOTES---------- 1. This Surveillance shall not be performed in MODE 1, 2, or 3. 2. Credit may be taken for unplanned events that satisfy this SR. ---------- Verify each required battery charger supplies ≥ 400 amps at ≥ 125 V for ≥ 12 hours.	18 months

SURVEILLANCE REQUIREMENTS (continued)

SURVEILLANCE		FREQUENCY
SR 3.8.4.7	----------NOTES---------- 1. The modified performance discharge test in SR 3.8.4.8 may be performed every 60 months in lieu of a service test in SR 3.8.4.7. 2. This Surveillance shall not be performed in MODE 1, 2, or 3. 3. Credit may be taken for unplanned events that satisfy this SR. ---------- Verify battery capacity is adequate to supply, and maintain in OPERABLE status, the required emergency loads for the design duty cycle when subjected to a battery service test.	18 months
SR 3.8.4.8	----------NOTES---------- 1. This Surveillance shall not be performed in MODE 1, 2, or 3. 2. Credit may be taken for unplanned events that satisfy this SR. ---------- Verify battery capacity is ≥ 80% of the manufacturer's rating when subjected to a performance discharge test or a modified performance discharge test.	60 months <u>AND</u> --------NOTE-------- Only applicable when battery shows degradation or has reached 85% of expected life. ---------- 12 months

3.8 ELECTRICAL POWER SYSTEMS

3.8.5 DC Sources – Shutdown

LCO 3.8.5 DC electrical power subsystem(s) shall be OPERABLE to support the required OPERABLE features and the electrical power distribution subsystem(s) required by LCO 3.8.10, "Distribution Systems – Shutdown."

APPLICABILITY: MODES 4 and 5,
During movement of irradiated fuel assemblies in secondary containment.

ACTIONS

CONDITION	REQUIRED ACTION	COMPLETION TIME
A. One or more required DC electrical power subsystems inoperable.	A.1 Declare affected required feature(s) inoperable.	Immediately
	OR	
	A.2.1 Suspend CORE ALTERATIONS.	Immediately
	AND	
	A.2.2 Suspend movement of irradiated fuel assemblies in secondary containment.	Immediately
	AND	
	A.2.3 Initiate action to suspend operations with a potential for draining the reactor vessel.	Immediately
	AND	
	A.2.4 Initiate action to restore required DC electrical power subsystems to OPERABLE status.	Immediately

SURVEILLANCE REQUIREMENTS

SURVEILLANCE		FREQUENCY
SR 3.8.5.1	For DC sources required to be OPERABLE the following SRs are applicable: SR 3.8.4.1 SR 3.8.4.4 SR 3.8.4.7 SR 3.8.4.2 SR 3.8.4.5 SR 3.8.4.8. SR 3.8.4.3 SR 3.8.4.6	In accordance with applicable SRs

3.8 ELECTRICAL POWER SYSTEMS

3.8.6 Battery Cell Parameters

LCO 3.8.6 Battery cell parameters for the Division 1, 2, 3, and 4 batteries shall be within the Category A and B limits of Table 3.8.6-1.

APPLICABILITY: When associated DC electrical power subsystems are required to be OPERABLE.

ACTIONS

----------NOTE----------
Separate Condition entry is allowed for each battery.

CONDITION	REQUIRED ACTION	COMPLETION TIME
A. One or more batteries with one or more battery cell parameters not within Table 3.8.6-1 Category A or B limits.	A.1 Verify pilot cells electrolyte level and float voltage meet Table 3.8.6-1 Category C limits.	1 hour
	AND	
	A.2 Verify battery cell parameters meet Table 3.8.6-1 Category C limits.	24 hours
	AND	
	A.3 Restore battery cell parameters to Category A and B limits of Table 3.8.6-1.	31 days

ACTIONS (continued)

CONDITION	REQUIRED ACTION	COMPLETION TIME
B. Required Action and associated Completion Time of Condition A not met. <u>OR</u> One or more batteries with average electrolyte temperature of the representative cells < 10°C. <u>OR</u> One or more batteries with one or more battery cell parameters not within Category C limits.	B.1 Declare associated battery inoperable.	Immediately

SURVEILLANCE REQUIREMENTS

SURVEILLANCE		FREQUENCY
SR 3.8.6.1	Verify battery cell parameters meet Table 3.8.6-1 Category A limits.	7 days
SR 3.8.6.2	Verify battery cell parameters meet Table 3.8.6-1 Category B limits.	92 days AND Once within 24 hours after battery discharge < 110 V AND Once within 24 hours after battery overcharge > 150 V
SR 3.8.6.3	Verify average electrolyte temperature of representative cells is ≥ 10°C.	92 days

Table 3.8.6-1 (page 1 of 1)
Battery Cell Parameter Requirements

PARAMETER	CATEGORY A: LIMITS FOR EACH DESIGNATED PILOT CELL	CATEGORY B: LIMITS FOR EACH CONNECTED CELL	CATEGORY C: LIMITS FOR EACH CONNECTED CELL
Electrolyte Level	> Minimum level indication mark, and ≤ 6 mm above maximum level indication mark[(a)]	> Minimum level indication mark, and ≤ 6 mm above maximum level indication mark[(a)]	Above top of plates, and not overflowing
Float Voltage	≥ 2.13 V	≥ 2.13 V	> 2.07 V
Specific Gravity [(b)(c)]	≥ 1.195	≥ 1.190 AND Average of all connected cells > 1.200	Not more than 0.020 below average of all connected cells AND Average of all connected cells ≥ 1.190

(a) It is acceptable for the electrolyte level to temporarily increase above the specified maximum level during equalizing charges provided it is not overflowing.

(b) Corrected for electrolyte temperature and level.

(c) Or battery charging current is < 2 amps when on float charge. This is acceptable only during a maximum of 7 days following a battery recharge.

3.8 ELECTRICAL POWER SYSTEMS

3.8.7 Inverters – Operating

LCO 3.8.7 The Division I, Division II, Division III, and Division IV inverters shall be OPERABLE.

APPLICABILITY: MODES 1, 2, and 3.

ACTIONS

CONDITION	REQUIRED ACTION	COMPLETION TIME
A. One inverter inoperable.	----------NOTE---------- Immediately enter applicable Conditions and Required Actions of LCO 3.8.9 “Distribution Systems – Operating” for de-energized AC Vital buses. ---------- A.1 Restore inverters to OPERABLE status. <u>AND</u> A.2 Declare affected required features inoperable.	 7 days 24 hours

ACTIONS (continued)

CONDITION	REQUIRED ACTION	COMPLETION TIME
B. One inverter (either Division I, II, or III) inoperable. AND Division IV inverter inoperable.	----------NOTE---------- Immediately enter applicable Conditions and Required Actions of LCO 3.8.9 "Distribution Systems – Operating," for de-energized AC Vital buses. ---------- B.1 Restore inoperable inverter (other than Division IV) to OPERABLE status. OR B.2 Restore Division IV inverter to OPERABLE status.	 2 hours 2 hours
C. Required Action and associated Completion Time of Condition A, or B not met.	C.1 Be in MODE 3. AND C.2 Be in MODE 4.	12 hours 36 hours

SURVEILLANCE REQUIREMENTS

SURVEILLANCE		FREQUENCY
SR 3.8.7.1	Verify correct inverter voltage, frequency, and alignment to required AC vital buses.	7 days

3.8 ELECTRICAL POWER SYSTEMS

3.8.8 Inverters – Shutdown

LCO 3.8.8 Inverter(s) shall be OPERABLE to support required OPERABLE features and the onsite Class 1E AC vital bus electrical power distribution subsystem(s) required by LCO 3.8.10, "Distribution Systems – Shutdown."

APPLICABILITY: MODES 4 and 5,
During movement of irradiated fuel assemblies in the secondary containment.

ACTIONS

CONDITION	REQUIRED ACTION	COMPLETION TIME
A. One or more required inverters inoperable.	A.1 Declare affected required feature(s) inoperable.	Immediately
	OR	
	A.2.1 Suspend CORE ALTERATIONS.	Immediately
	AND	
	A.2.2 Suspend handling of irradiated fuel assemblies in the secondary containment.	Immediately
	AND	
	A.2.3 Initiate action to suspend operations with a potential for draining the reactor vessel.	Immediately
	AND	
	A.2.4 Initiate action to restore required inverters to OPERABLE status.	Immediately

SURVEILLANCE REQUIREMENTS

SURVEILLANCE		FREQUENCY
SR 3.8.8.1	Verify correct inverter voltage, frequency, and alignments to required AC vital buses.	7 days

3.8 ELECTRICAL POWER SYSTEMS

3.8.9 Distribution Systems – Operating

LCO 3.8.9 Division I, II, and III AC, Divisions I, II, III, and IV DC, and Divisions I, II, III, and IV AC vital bus electrical power distribution subsystems shall be OPERABLE.

APPLICABILITY: MODES 1, 2, and 3.

ACTIONS

CONDITION	REQUIRED ACTION		COMPLETION TIME
A. One AC electrical power distribution subsystem inoperable.	A.1	Declare affected required features inoperable.	2 hours
	AND		
	A.2	Verify the combustion turbine generator (CTG) is functional by verifying the CTG starts and achieves steady state voltage and frequency in less than 10 minutes.	12 hours
	AND		
	A.3	Verify the CTG circuit breakers are capable of being aligned to the OPERABLE ESF buses.	12 hours AND Once per 8 hours thereafter
	AND		
	A.4	Restore AC electrical power distribution subsystem to OPERABLE status.	72 hours AND 7 days from discovery of failure to meet LCO

ACTIONS (continued)

CONDITION	REQUIRED ACTION	COMPLETION TIME
B. One AC vital bus electrical power distribution subsystem inoperable.	B.1 Declare affected required features inoperable. AND B.2 Restore AC vital bus electrical power distribution subsystem to OPERABLE status.	2 hours 72 hours AND 7 days from discovery of failure to meet LCO
C. One AC vital bus electrical power distribution subsystem (either Division I, II, or III) inoperable. AND Division IV AC vital bus inoperable.	C.1 Restore inoperable AC vital bus (other than Division IV) to OPERABLE status. OR C.2 Restore inoperable Division IV AC vital bus to OPERABLE status.	2 hours 2 hours

ACTIONS (continued)

CONDITION	REQUIRED ACTION		COMPLETION TIME
D. One DC electrical power distribution subsystem (either Division I, II, or III) inoperable.	D.1	Declare affected required features inoperable.	2 hours
	AND		
	D.2	Verify the combustion turbine generator (CTG) is functional by verifying the CTG starts and achieves steady state voltage and frequency in less than 10 minutes.	12 hours
	AND		
	D.3	Verify the CTG circuit breakers are capable of being aligned to the two unaffected ESF buses.	12 hours AND Once per 8 hours thereafter
	AND		
	D.4	Restore DC electrical power distribution subsystems to OPERABLE status.	72 hours AND 7 days from discovery of failure to meet LCO
E. Division IV DC electrical power distribution subsystem inoperable.	E.1	Declare affected required features inoperable.	2 hours

ACTIONS (continued)

CONDITION	REQUIRED ACTION	COMPLETION TIME
F. One DC electrical power distribution subsystem (either Division I, II, or III) inoperable. AND Division IV DC electrical power distribution subsystem inoperable.	F.1 Restore inoperable DC electrical power distribution subsystems (other than Division IV) to OPERABLE status. OR F.2 Restore Division IV DC electrical power distribution subsystems to OPERABLE status.	2 hours 2 hours
G. Required Action and associated Completion Time of Condition A, B, C, D, E, or F not met.	G.1 Be in MODE 3. AND G.2 Be in MODE 4.	12 hours 36 hours

SURVEILLANCE REQUIREMENTS

SURVEILLANCE		FREQUENCY
SR 3.8.9.1	Verify correct breaker alignments and voltage to required AC, DC, and AC vital bus electrical power distribution subsystems.	7 days

3.8 ELECTRICAL POWER SYSTEMS

3.8.10 Distribution Systems – Shutdown

LCO 3.8.10 The necessary portions of the Divisions I, II, and III AC, Divisions I, II, III, and 4 DC, and Divisions I, II, III, and IV AC vital bus electrical power distribution subsystems shall be OPERABLE to support equipment required to be OPERABLE.

APPLICABILITY: MODES 4 and 5,
During movement of irradiated fuel assemblies in the secondary containment.

ACTIONS

CONDITION	REQUIRED ACTION	COMPLETION TIME
A. One or more required AC, DC, or AC vital bus electrical power distribution subsystems inoperable.	A.1 Declare associated supported required feature(s) inoperable.	Immediately
	OR	
	A.2.1 Suspend CORE ALTERATIONS.	Immediately
	AND	
	A.2.2 Suspend handling of irradiated fuel assemblies in the secondary containment.	Immediately
	AND	

ACTIONS (continued)

CONDITION	REQUIRED ACTION	COMPLETION TIME
A. (continued)	A.2.3 Initiate action to suspend operations with a potential for draining the reactor vessel.	Immediately
	AND	
	A.2.4 Initiate actions to restore required AC, DC, and AC vital bus electrical power distribution subsystems to OPERABLE status.	Immediately
	AND	
	A.2.5 Declare associated required shutdown cooling subsystem(s) inoperable and not in operation.	Immediately

SURVEILLANCE REQUIREMENTS

SURVEILLANCE		FREQUENCY
SR 3.8.10.1	Verify correct breaker alignments and voltage to required AC, DC, and AC vital bus electrical power distribution subsystems.	7 days

3.8 ELECTRICAL POWER SYSTEMS

3.8.11 AC Sources – Shutdown (Low Water Level)

LCO 3.8.11 The following AC electrical power sources shall be OPERABLE:

a. One qualified circuit between the offsite transmission network and the onsite Class 1E AC electrical power distribution subsystems required by LCO 3.8.10, “Distribution Systems – Shutdown;”

b. Two or more diesel generators (DGs) capable of supplying the required OPERABLE features via the onsite Class 1E AC electrical power distribution subsystems required by LCO 3.8.10.

APPLICABILITY: MODE 4 and MODE 5 with water level in the refueling cavity < 7.0 meters above the reactor pressure vessel flange.

ACTIONS

CONDITION	REQUIRED ACTION	COMPLETION TIME
A. Required offsite circuit inoperable.	----------NOTE---------- Enter applicable Condition and Required Actions of LCO 3.8.10, with one required division de-energized as a result of Condition A. ----------	
	A.1.1 Initiate action to restore required offsite circuit to OPERABLE status supplying power to all required ESF buses.	Immediately
	AND	
	A.1.2 Declare affected required feature(s) with no power available from an OPERABLE offsite circuit inoperable.	8 hours

ACTIONS (continued)

CONDITION	REQUIRED ACTION	COMPLETION TIME
A. (continued)	OR	
	A.2.1 Suspend CORE ALTERATIONS.	8 hours
	AND	
	A.2.2 Suspend movement of irradiated fuel assemblies in secondary containment.	8 hours
	AND	
	A.2.3 Initiate action to suspend operations with a potential for draining the reactor vessel (OPDRVs).	8 hours
	AND	
	A.2.4 Initiate action to restore required offsite circuit to OPERABLE status supplying power to all required ESF buses.	Immediately
B. One required DG inoperable.	B.1 Verify the combustion turbine generator (CTG) is functional by verifying the CTG starts and achieves steady state voltage and frequency in less than 10 minutes.	1 hour
	AND	
	B.2 Verify the CTG circuit breakers are aligned to the ESF bus associated with the inoperable required DG.	1 hour AND Once per 8 hours thereafter
	AND	

ACTIONS (continued)

CONDITION	REQUIRED ACTION		COMPLETION TIME
B. (continued)	B.3	Restore required DG to OPERABLE status.	14 days
C. Required Action and Completion Time of Condition B not met. <u>OR</u> Two or more required DGs inoperable.	C.1	Suspend CORE ALTERATIONS.	Immediately
	<u>AND</u>		
	C.2	Suspend movement of irradiated fuel assemblies in secondary containment.	Immediately
	<u>AND</u>		
	C.3	Initiate action to suspend OPDRVs.	Immediately
	<u>AND</u>		
	C.4	Initiate action to restore required DG(s) to OPERABLE status.	Immediately
	<u>AND</u>		
	C.5	Declare affected required features supported by the inoperable DG(s) inoperable.	8 hours

SURVEILLANCE REQUIREMENTS

SURVEILLANCE		FREQUENCY
SR 3.8.11.1	For AC sources required to be OPERABLE, the SRs of Specification 3.8.2 are applicable.	In accordance with applicable SRs

3.9 REFUELING OPERATIONS

3.9.1 Refueling Equipment Interlocks

LCO 3.9.1 The refueling equipment interlocks associated with the reactor mode switch in the refuel position shall be OPERABLE.

APPLICABILITY: During in-vessel fuel movement with equipment associated with the interlocks when the reactor mode switch is in the refuel position.

ACTIONS

CONDITION	REQUIRED ACTION	COMPLETION TIME
A. One or more required refueling equipment interlocks inoperable.	A.1 Suspend in-vessel fuel movement with equipment associated with the inoperable interlock(s).	Immediately

SURVEILLANCE REQUIREMENTS

SURVEILLANCE		FREQUENCY
SR 3.9.1.1	Perform CHANNEL FUNCTIONAL TEST on each of the following required refueling equipment interlock inputs: a. All-rods-in, b. Refuel machine position, and c. Refuel machine main hoist, fuel loaded.	7 days

3.9 REFUELING OPERATIONS

3.9.2 Refuel Position Rod-Out Interlock

LCO 3.9.2 The refuel position rod-out interlock shall be OPERABLE.

APPLICABILITY: MODE 5 with the reactor mode switch in the refuel position and any control rod withdrawn.

ACTIONS

CONDITION	REQUIRED ACTION	COMPLETION TIME
A. Refuel position rod-out interlock inoperable.	A.1 Suspend control rod withdrawal.	Immediately
	AND	
	A.2 Initiate action to fully insert all insertable control rods in core cells containing one or more fuel assemblies.	Immediately

SURVEILLANCE REQUIREMENTS

SURVEILLANCE		FREQUENCY
SR 3.9.2.1	Verify reactor mode switch locked in refuel position.	12 hours
SR 3.9.2.2	----------NOTE---------- Not required to be performed until 1 hour after any control rod is withdrawn. ---------- Perform CHANNEL FUNCTIONAL TEST.	7 days

3.9 REFUELING OPERATIONS

3.9.3 Control Rod Position

LCO 3.9.3 All control rods shall be fully inserted.

APPLICABILITY: When loading fuel assemblies into the core.

ACTIONS

CONDITION	REQUIRED ACTION	COMPLETION TIME
A. One or more control rods not fully inserted.	A.1 Suspend loading fuel assemblies into the core.	Immediately

SURVEILLANCE REQUIREMENTS

SURVEILLANCE	FREQUENCY
SR 3.9.3.1 Verify all control rods are fully inserted.	12 hours

3.9 REFUELING OPERATIONS

3.9.4 Control Rod Position Indication

LCO 3.9.4 One control rod “full-in” position indication channel for each control rod shall be OPERABLE in core cells containing one or more fuel assemblies.

APPLICABILITY: MODE 5.

ACTIONS

----------NOTE----------
Separate Condition entry is allowed for each required channel.

CONDITION	REQUIRED ACTION	COMPLETION TIME
A. One or more required control rod position indication channels inoperable.	A.1.1 Suspend in-vessel fuel movement.	Immediately
	AND	
	A.1.2 Suspend control rod withdrawal.	Immediately
	AND	
	A.1.3 Initiate action to fully insert all insertable control rods in core cells containing one or more fuel assemblies.	Immediately
	OR	
	A.2.1 Initiate action to fully insert the control rod associated with the inoperable position indicator.	Immediately
	AND	

ACTIONS (continued)

CONDITION	REQUIRED ACTION	COMPLETION TIME
A. (continued)	A.2.2 Initiate action to disarm the associated fully inserted control rod drive.	Immediately

SURVEILLANCE REQUIREMENTS

SURVEILLANCE		FREQUENCY
SR 3.9.4.1	Verify the required channel has no “full-in” indication on each control rod that is not “full-in.”	Each time the control rod is withdrawn from the “full-in” position

3.9 REFUELING OPERATIONS

3.9.5 Control Rod OPERABILITY – Refueling

LCO 3.9.5 Each withdrawn control rod shall be OPERABLE.

APPLICABILITY: MODE 5.

ACTIONS

CONDITION	REQUIRED ACTION	COMPLETION TIME
A. One or more withdrawn control rods inoperable.	A.1 Initiate action to fully insert inoperable withdrawn control rods.	Immediately

SURVEILLANCE REQUIREMENTS

SURVEILLANCE		FREQUENCY
SR 3.9.5.1	Insert each withdrawn control rod at least one step.	7 days
SR 3.9.5.2	Verify each withdrawn control rod scram accumulator pressure is ≥ 12.75 MPaG.	7 days

3.9 REFUELING OPERATIONS

3.9.6 Reactor Pressure Vessel (RPV) Water Level

LCO 3.9.6 RPV water level shall be ≥ 7.0 m above the top of the RPV flange.

APPLICABILITY: During movement of irradiated fuel assemblies within the RPV,
During movement of new fuel assemblies or handling of control rods within the RPV, when irradiated fuel assemblies are seated within the RPV.

ACTIONS

CONDITION	REQUIRED ACTION	COMPLETION TIME
A. RPV water level not within limit.	A.1 Suspend movement of fuel assemblies and handling of control rods within the RPV.	Immediately

SURVEILLANCE REQUIREMENTS

SURVEILLANCE		FREQUENCY
SR 3.9.6.1	Verify RPV water level is ≥ 7.0 m above the top of the RPV flange.	24 hours

3.9 REFUELING OPERATIONS

3.9.7 Residual Heat Removal (RHR) – High Water Level

LCO 3.9.7 One RHR shutdown cooling subsystem shall be OPERABLE and in operation.

----------NOTE----------
The required RHR shutdown cooling subsystem may be removed from operation for up to 2 hours per 8 hour period.

APPLICABILITY: MODE 5 with irradiated fuel in the reactor pressure vessel (RPV) and with the water level ≥ 7.0 m above the top of the RPV flange.

ACTIONS

CONDITION	REQUIRED ACTION	COMPLETION TIME
A. Required RHR shutdown cooling subsystem inoperable.	A.1 Verify an alternate method of decay heat removal is available.	1 hour AND Once per 24 hours thereafter
B. Required Action and associated Completion Time of Condition A not met.	B.1 Suspend loading irradiated fuel assemblies into the RPV. AND B.2 Initiate action to restore the secondary containment to OPERABLE status. AND	Immediately Immediately

ACTIONS (continued)

CONDITION	REQUIRED ACTION		COMPLETION TIME
B. (continued)	B.3	Initiate action to restore one standby gas treatment subsystem to OPERABLE status.	Immediately
	AND		
	B.4	Initiate action to restore one secondary containment isolation valve and associated instrumentation to OPERABLE status in each associated penetration flow path not isolated.	Immediately
C. Required RHR shutdown cooling subsystem not in operation.	C.1	Establish reactor coolant circulation by an alternate method.	1 hour from discovery of no reactor coolant circulation
	AND		
	C.2	Monitor reactor coolant temperature.	Once per hour

SURVEILLANCE REQUIREMENTS

SURVEILLANCE		FREQUENCY
SR 3.9.7.1	Verify one RHR shutdown cooling subsystem is operating and circulating reactor coolant.	12 hours

3.9 REFUELING OPERATIONS

3.9.8 Residual Heat Removal (RHR) – Low Water Level

LCO 3.9.8 Two RHR shutdown cooling subsystems shall be OPERABLE, and one RHR shutdown cooling subsystem shall be in operation.

----------NOTE----------
The required operating shutdown cooling subsystem may be removed from operation for up to 2 hours per 8 hour period.

APPLICABILITY: MODE 5 with irradiated fuel in the reactor pressure vessel (RPV) and with the water level < 7.0 m above the top of the RPV flange.

ACTIONS

CONDITION	REQUIRED ACTION	COMPLETION TIME
A. One or two RHR shutdown cooling subsystems inoperable.	A.1 Verify an alternate method of decay heat removal is available for each inoperable RHR shutdown cooling subsystem.	1 hour AND Once per 24 hours thereafter
B. Required Action and associated Completion Time of Condition A not met.	B.1 Initiate action to restore the secondary containment to OPERABLE status. AND B.2 Initiate action to restore one standby gas treatment subsystem to OPERABLE status. AND	Immediately Immediately

ACTIONS (continued)

CONDITION	REQUIRED ACTION	COMPLETION TIME
B. (continued)	B.3 Initiate action to restore one secondary containment isolation valve and associated instrumentation to OPERABLE status in each associated penetration flow path not isolated.	Immediately
C. No RHR shutdown cooling subsystem in operation.	C.1 Establish reactor coolant circulation by an alternate method. AND C.2 Monitor reactor coolant temperature.	1 hour from discovery of no reactor coolant circulation Once per hour

SURVEILLANCE REQUIREMENTS

SURVEILLANCE		FREQUENCY
SR 3.9.8.1	Verify one RHR shutdown cooling subsystem is operating and circulating reactor coolant.	12 hours

3.10 SPECIAL OPERATIONS

3.10.1 Inservice Leak and Hydrostatic Testing Operation

LCO 3.10.1 The average reactor coolant temperature specified in Table 1.1-1 for MODE 4 may be changed to “NA,” and operation considered not to be in MODE 3; and the requirements of LCO 3.4.8, “Residual Heat Removal (RHR) Shutdown Cooling System – Cold Shutdown,” may be suspended, to allow performance of an inservice leak or hydrostatic test provided the following MODE 3 LCOs are met:

a. LCO 3.3.1.1, “SSLC Sensor Instrumentation,” Functions 7b, 24a and 24b];

b. LCO 3.3.1.4, “ESF Actuation Instrumentation,” Function 11;

c. LCO 3.6.4.1, “Secondary Containment”;

d. LCO 3.6.4.2, “Secondary Containment Isolation Valves (SCIVs)”; and

e. LCO 3.6.4.3, “Standby Gas Treatment (SGT) System.”

APPLICABILITY: MODE 4 with average reactor coolant temperature > 93°C.

ACTIONS

----------NOTE----------
Separate Condition entry is allowed for each requirement of the LCO.

CONDITION	REQUIRED ACTION	COMPLETION TIME
A. One or more of the above requirements not met.	A.1 ----------NOTE---------- Required Actions to be in MODE 4 include reducing average reactor coolant temperature to ≤ 93°C. ---------- Enter the applicable Condition of the affected LCO.	Immediately
	OR	
	A.2.1 Suspend activities that could increase the average reactor coolant temperature or pressure.	Immediately
	AND	
	A.2.2 Reduce average reactor coolant temperature to ≤ 93°C.	24 hours

SURVEILLANCE REQUIREMENTS

SURVEILLANCE		FREQUENCY
SR 3.10.1.1	Perform the applicable SRs for the required MODE 3 LCOs.	According to the applicable SRs

3.10 SPECIAL OPERATIONS

3.10.2 Reactor Mode Switch Interlock Testing

LCO 3.10.2 The reactor mode switch position specified in Table 1.1-1 (Section 1.1, Definitions) for MODES 3, 4, and 5 may be changed to include the run, startup/hot standby, and refuel position, and operation considered not to be in MODE 1 or 2, to allow testing of instrumentation associated with the reactor mode switch interlock functions, provided:

a. All control rods remain fully inserted in core cells containing one or more fuel assemblies; and

b. No CORE ALTERATIONS are in progress.

APPLICABILITY: MODES 3 and 4 with the reactor mode switch in the run, startup/hot standby, or refuel position,
MODE 5 with the reactor mode switch in the run or startup/hot standby position.

ACTIONS

CONDITION	REQUIRED ACTION	COMPLETION TIME
A. One or more of the above requirements not met.	A.1 Suspend CORE ALTERATIONS except for control rod insertion.	Immediately
	AND	
	A.2 Fully insert all insertable control rods in core cells containing one or more fuel assemblies.	1 hour
	AND	
	A.3.1 Place the reactor mode switch in the shutdown position.	1 hour
	OR	

ACTIONS (continued)

CONDITION	REQUIRED ACTION	COMPLETION TIME
A. (continued)	A.3.2 ----------NOTE---------- Only applicable in MODE 5. ---------- Place the reactor mode switch in the refuel position.	1 hour

SURVEILLANCE REQUIREMENTS

SURVEILLANCE		FREQUENCY
SR 3.10.2.1	Verify all control rods are fully inserted in core cells containing one or more fuel assemblies.	12 hours
SR 3.10.2.2	Verify no CORE ALTERATIONS are in progress.	24 hours

3.10 SPECIAL OPERATIONS

3.10.3 Control Rod Withdrawal – Hot Shutdown

LCO 3.10.3 The reactor mode switch position specified in Table 1.1-1 for MODE 3 may be changed to include the refuel position, and operation considered not to be in MODE 2, to allow withdrawal of a single control rod or control rod pair, provided the following requirements are met:

a. LCO 3.9.2, “Refuel Position Rod-Out Interlock”;

b. LCO 3.9.4, “Control Rod Position Indication”;

c. All other control rods are fully inserted; and

d. 1. LCO 3.3.1.1, “SSLC Sensor Instrumentation,” MODE 5 requirements for Functions 1.a, 1.d, 2.a, and 2.d of Table 3.3.1.1-1,
and

LCO 3.3.1.2, “RPS and MSIV Trip Actuation,” Functions 1.a, 1.b, 3, and 4,
and

LCO 3.9.5, “Control Rod OPERABILITY – Refueling,”

<u>OR</u>

2. All other control rods in a five by five array centered on each control rod being withdrawn are disarmed, and

LCO 3.1.1, “SHUTDOWN MARGIN (SDM),” MODE 5 requirements, except the single control rod or pair to be withdrawn may be assumed to be the highest worth control rod.

APPLICABILITY: MODE 3 with the reactor mode switch in the refuel position.

ACTIONS

----------NOTE----------
Separate Condition entry is allowed for each requirement of the LCO.

CONDITION	REQUIRED ACTION	COMPLETION TIME
A. One or more of the above requirements not met.	A.1 ----------NOTES---------- 1. Required Actions to fully insert all insertable control rods include placing the reactor mode switch in the shutdown position. 2. Only applicable if the requirement not met is a required LCO. ---------- Enter the applicable Condition of the affected LCO.	Immediately
	<u>OR</u>	
	A.2.1 Initiate action to fully insert all insertable control rods.	Immediately
	<u>AND</u>	
	A.2.2 Place the reactor mode switch in the shutdown position.	1 hour

SURVEILLANCE REQUIREMENTS

SURVEILLANCE		FREQUENCY
SR 3.10.3.1	Perform the applicable SRs for the required LCOs.	According to the applicable SRs
SR 3.10.3.2	----------NOTE---------- Not required to be met if SR 3.10.3.1 is satisfied for LCO 3.10.3.d.1 requirements. ---------- Verify all control rods, other than the control rod or rod pair being withdrawn, in a five by five array centered on each control rod being withdrawn, are disarmed.	24 hours
SR 3.10.3.3	Verify all control rods, other than the control rod or rod pair being withdrawn, are fully inserted.	24 hours

3.10 SPECIAL OPERATIONS

3.10.4 Control Rod Withdrawal – Cold Shutdown

LCO 3.10.4 The reactor mode switch position specified in Table 1.1-1 for MODE 4 may be changed to include the refuel position, and operation considered not to be in MODE 2, to allow withdrawal of a single control rod or control rod pair, and subsequent removal of the associated control rod drives (CRD) if desired, provided the following requirements are met:

a. All other control rods are fully inserted;

b. 1. LCO 3.9.2, “Refuel Position Rod-Out Interlock,” and

LCO 3.9.4, “Control Rod Position Indication,”

<u>OR</u>

2. A control rod withdrawal block is inserted; and

c. 1. LCO 3.3.1.1, “SSLC Sensor Instrumentation,” MODE 5 requirements for Functions 1.a, 1.d, 2.a, and 2.d., of Table 3.3.1.1-1,

LCO 3.3.1.2, “RPS and MSIV Trip Actuation,” Functions 1.a, 1.b, 3, and 4; and

LCO 3.9.5, “Control Rod OPERABILITY – Refueling,”

<u>OR</u>

2. All other control rods in a five by five array centered on the control rod or control rod pair being withdrawn are disarmed, and

LCO 3.1.1, “SHUTDOWN MARGIN (SDM),” MODE 5 requirements, except the single control rod or control rod pair to be withdrawn may be assumed to be the highest worth control rod or control rod pair.

APPLICABILITY: MODE 4 with the reactor mode switch in the refuel position.

ACTIONS

----------NOTE----------
Separate Condition entry is allowed for each requirement of the LCO.

CONDITION	REQUIRED ACTION	COMPLETION TIME
A. One or more of the above requirements not met with the affected control rod(s) insertable.	A.1 ----------NOTES---------- 1. Required Actions to fully insert all insertable control rods include placing the reactor mode switch in the shutdown position. 2. Only applicable if the requirement not met is a required LCO. ---------- Enter the applicable Condition of the affected LCO.	Immediately
	OR	
	A.2.1 Initiate action to fully insert all insertable control rods.	Immediately
	AND	
	A.2.2 Place the reactor mode switch in the shutdown position.	1 hour
B. One or more of the above requirements not met with the affected control rod(s) not insertable.	B.1 Suspend withdrawal of the control rod(s) and removal of associated CRD(s).	Immediately
	AND	
	B.2.1 Initiate action to fully insert all control rods.	Immediately
	OR	

ACTIONS (continued)

CONDITION	REQUIRED ACTION	COMPLETION TIME
B. (continued)	B.2.2 Initiate action to satisfy the requirements of this LCO.	Immediately

SURVEILLANCE REQUIREMENTS

SURVEILLANCE		FREQUENCY
SR 3.10.4.1	Perform the applicable SRs for the required LCOs.	According to applicable SRs
SR 3.10.4.2	----------NOTE---------- Not required to be met if SR 3.10.4.1 is satisfied for LCO 3.10.4.c.1 requirements. ---------- Verify all control rods, other than the control rod or rod pair being withdrawn, in a five by five array centered on each control rod being withdrawn, are disarmed.	24 hours
SR 3.10.4.3	Verify all control rods, other than the control rod or rod pair being withdrawn, are fully inserted.	24 hours
SR 3.10.4.4	----------NOTE---------- Not required to be met if SR 3.10.4.1 is satisfied for LCO 3.10.4.b.1 requirements. ---------- Verify a control rod withdrawal block is inserted.	24 hours

3.10 SPECIAL OPERATIONS

3.10.5 Control Rod Drive (CRD) Removal – Refueling

LCO 3.10.5 The requirements of Functions 1.a, 1.b, 1.d, and 12 of LCO 3.3.1.1, "SSLC Sensor Instrumentation"; Functions 1.a, 1.b, 3, and 4 of LCO 3.3.1.2, "RPS and MSIV Actuation", LCO 3.3.8.1, "Electric Power Monitoring"; LCO 3.9.1, "Refueling Equipment Interlocks"; LCO 3.9.2, "Refueling Position Rod-Out Interlock"; LCO 3.9.4, "Control Rod Position Indication"; and LCO 3.9.5, "Control Rod OPERABILITY – Refueling," may be suspended in MODE 5 to allow the removal of a single CRD or CRD pair associated with control rod(s) withdrawn from core cell(s) containing one or more fuel assemblies, provided the following requirements are met:

a. All other control rods are fully inserted;

b. All other control rods in a five by five array centered on the control rod being removed are disarmed;

c. A control rod withdrawal block is inserted;

d. LCO 3.1.1, "SHUTDOWN MARGIN (SDM)," MODE 5 requirements, except the single control rod (or pair) to be withdrawn may be assumed to be the highest worth control rod pair; and

e. No other CORE ALTERATIONS are in progress.

APPLICABILITY: MODE 5 with LCO 3.9.5 not met.

ACTIONS

CONDITION	REQUIRED ACTION	COMPLETION TIME
A. One or more of the above requirements not met.	A.1 Suspend removal of the control rod(s) and associated CRD mechanism.	Immediately
	AND	
	A.2.1 Initiate action to fully insert all control rods.	Immediately

ACTIONS (continued)

CONDITION	REQUIRED ACTION	COMPLETION TIME
A. (continued)	OR	
	A.2.2 Initiate action to satisfy the requirements of this LCO.	Immediately

SURVEILLANCE REQUIREMENTS

SURVEILLANCE		FREQUENCY
SR 3.10.5.1	Verify all controls rods, other than the control rod withdrawn for the removal of the associated CRD, are fully inserted.	24 hours
SR 3.10.5.2	Verify all control rods, other than the control rod withdrawn for the removal of the associated CRD, in a five by five array centered on each control rod withdrawn for the removal of the associated CRD, are disarmed.	24 hours
SR 3.10.5.3	Verify a control rod withdrawal block is inserted.	24 hours
SR 3.10.5.4	Perform SR 3.1.1.1.	According to SR 3.1.1.1
SR 3.10.5.5	Verify no CORE ALTERATIONS, other than the single control rod or control rod pair being removed, are in progress.	24 hours

3.10 SPECIAL OPERATIONS

3.10.6 Multiple Control Rod Withdrawal – Refueling

LCO 3.10.6 The requirements of LCO 3.9.3, “Control Rod Position”; LCO 3.9.4, “Control Rod Position Indication”; and LCO 3.9.5, “Control Rod OPERABILITY – Refueling,” may be suspended, and the “full in” position indicators may be bypassed for any number of control rods in MODE 5, to allow withdrawal of these control rods, removal of associated control rod drives (CRDs), or both, provided the following requirements are met:

a. The four fuel assemblies are removed from the core cells associated with each control rod or CRD to be removed;

b. All other control rods in core cells containing one or more fuel assemblies are fully inserted; and

c. Fuel assemblies shall only be loaded in compliance with an approved spiral reload sequence.

APPLICABILITY: MODE 5 with LCO 3.9.3, LCO 3.9.4, or LCO 3.9.5 not met.

ACTIONS

CONDITION	REQUIRED ACTION	COMPLETION TIME
A. One or more of the above requirements not met.	A.1 Suspend withdrawal of control rods and removal of associated CRDs.	Immediately
	AND	
	A.2.1 Initiate action to fully insert all control rods in core cells containing one or more fuel assemblies.	Immediately
	OR	
	A.2.2 Initiate action to satisfy the requirements of this LCO.	Immediately

SURVEILLANCE REQUIREMENTS

SURVEILLANCE		FREQUENCY
SR 3.10.6.1	Verify the four fuel assemblies are removed from core cells associated with each control rod or CRD removed.	24 hours
SR 3.10.6.2	Verify all other control rods in core cells containing one or more fuel assemblies are fully inserted.	24 hours
SR 3.10.6.3	----------NOTE---------- Only required to be met during fuel loading. ---------- Verify fuel assemblies being loaded are in compliance with an approved spiral reload sequence.	24 hours

3.10 SPECIAL OPERATIONS

3.10.7 Control Rod Testing – Operating

LCO 3.10.7 The requirements of LCO 3.1.6, “Rod Pattern Control,” may be suspended to allow performance of SDM demonstrations, control rod scram time testing, control rod friction testing, and the Startup Test Program, provided LCO 3.3.5.1, “Control Rod Block Instrumentation” for Function 1.b of Table 3.3.5.1-1 is met with the approved control rod sequence or conformance to the approved control rod sequence for the specified test is verified by a second licensed operator or other qualified member of the technical staff.

APPLICABILITY: MODES 1 and 2 with LCO 3.1.6 not met.

ACTIONS

CONDITION	REQUIRED ACTION	COMPLETION TIME
A. Requirements of the LCO not met.	A.1 Suspend performance of the test and exception to LCO 3.1.6.	Immediately

SURVEILLANCE REQUIREMENTS

SURVEILLANCE		FREQUENCY
SR 3.10.7.1	----------NOTE---------- Not required to be met if SR 3.10.7.2 is satisfied. ---------- Verify movement of control rods is in compliance with the approved control rod sequence for the specified test by a second licensed operator or other qualified member of the technical staff.	During control rod movement

SURVEILLANCE REQUIREMENTS (continued)

SURVEILLANCE		FREQUENCY
SR 3.10.7.2	----------NOTE---------- Not required to be met if SR 3.10.7.1 is satisfied. ---------- Perform the applicable SRs for LCO 3.3.5.1 Function 1.b.	According to the applicable SRs

3.10 SPECIAL OPERATIONS

3.10.8 SHUTDOWN MARGIN (SDM) Test – Refueling

LCO 3.10.8 The reactor mode switch position specified in Table 1.1-1 for MODE 5 may be changed to include the startup/hot standby position, and operation considered not to be in MODE 2, to allow SDM testing, provided the following requirements are met:

a. LCO 3.3.1.1, “SSLC Sensor Instrumentation,” MODE 2 requirements for Function 2.a and 2.d of Table 3.3.1.1-1;

b. 1. LCO 3.3.5.1, “Control Rod Block Instrumentation,” MODE 2 requirements for Function 1.b of Table 3.3.5.1-1,

<u>OR</u>

2. Conformance to the approved control rod sequence for the SDM test is verified by a second licensed operator or other qualified member of the technical staff;

c. Each withdrawn control rod shall be coupled to the associated CRD;

d. All control rod withdrawals that are not in compliance with the Ganged Withdrawal Sequence Restrictions (GWSR) shall be made using either the NOTCH withdrawal mode or the STEP withdrawal mode; and

e. No other CORE ALTERATIONS are in progress.

APPLICABILITY: MODE 5 with the reactor mode switch in startup/hot standby position.

ACTIONS

CONDITION	REQUIRED ACTION	COMPLETION TIME
A. One or more of the above requirements not met, for reasons other than Condition B.	A.1 Place the reactor mode switch in the shutdown or refuel position.	Immediately
B. One control rod not coupled to its associated CRD.	B.1 Declare the affected control rod inoperable.	Immediately

SURVEILLANCE REQUIREMENTS

SURVEILLANCE		FREQUENCY
SR 3.10.8.1	Perform the applicable SRs for LCO 3.3.1.1, Functions 2.a and 2.d.	According to the applicable SRs
SR 3.10.8.2	----------NOTE---------- Not required to be met if SR 3.10.8.3 satisfied. ---------- Perform the applicable SRs for LCO 3.3.5.1, Function 1.b.	According to the applicable SRs
SR 3.10.8.3	----------NOTE---------- Not required to be met if SR 3.10.8.2 satisfied. ---------- Verify movement of control rods is in compliance with the approved control rod sequence for the SDM test by a second licensed operator or other qualified member of the technical staff.	During control rod movement

SURVEILLANCE REQUIREMENTS (continued)

SURVEILLANCE		FREQUENCY
SR 3.10.8.4	Verify no other CORE ALTERATIONS are in progress.	12 hours
SR 3.10.8.5	Verify each withdrawn control rod does not go to the withdrawn overtravel position.	Prior to satisfying LCO 3.10.8.c requirement after work on control rod or CRD System that could affect coupling AND Once the first time the control rod is withdrawn to “full out” position after the associated orificed fuel support has been moved

3.10 SPECIAL OPERATIONS

3.10.9 Reactor Internal Pumps (RIPs) – Testing

LCO 3.10.9 The requirements of LCO 3.4.1, "Reactor Internal Pumps Operating," may be suspended for ≤ 24 hours to allow:

a. PHYSICS TESTS, provided THERMAL POWER is ≤ 5% RTP; and

b. Performance of the Startup Test Program.

APPLICABILITY: MODES 1 and 2 with less than nine RIPs in operation.

ACTIONS

CONDITION	REQUIRED ACTION	COMPLETION TIME
A. Requirements of LCO 3.4.1 not met for > 24 hours.	A.1 Insert all insertable control rods.	1 hour
B. Requirements of the LCO not met for reasons other than Condition A.	B.1 Place the reactor mode switch in the shutdown position.	Immediately

SURVEILLANCE REQUIREMENTS

SURVEILLANCE		FREQUENCY
SR 3.10.9.1	Verify LCO 3.4.1 requirements suspended for ≤ 24 hours.	1 hour
SR 3.10.9.2	Verify THERMAL POWER is ≤ 5% RTP during PHYSICS TESTS.	1 hour

3.10 SPECIAL OPERATIONS

3.10.10 Training Startups

LCO 3.10.10 The low pressure core flooder (LPFL) OPERABILITY requirements specified in LCO 3.5.1, "ECCS – Operating," may be changed to allow one residual heat removal subsystem to be aligned in the shutdown cooling mode for training startups, provided the following requirements are met:

a. REACTOR THERMAL POWER ≤ 1% RTP; and

b. Average reactor coolant temperature is < 93°C.

APPLICABILITY: MODE 2 with one LPFL subsystem suction valve closed.

ACTIONS

CONDITION	REQUIRED ACTION	COMPLETION TIME
A. One or more of the above requirements not met.	A.1 Place the reactor mode switch in the shutdown position.	Immediately

SURVEILLANCE REQUIREMENTS

SURVEILLANCE		FREQUENCY
SR 3.10.10.1	Verify REACTOR THERMAL POWER ≤ 1% RTP.	1 hour
SR 3.10.10.2	Verify average reactor coolant temperature is < 93°C.	1 hour

3.10 SPECIAL OPERATIONS

3.10.11 Low Power PHYSICS TEST

LCO 3.10.11 The reactor mode switch position specified in Table 1.1-1 for MODE 5 may be changed to include the startup/hot standby position, and operation considered not to be in MODE 2, to allow Low Power PHYSICS TEST, provided the following requirements are met:

a. 1. LCO 3.3.5.1, “Control Rod Block Instrumentation,” MODE 2 requirements for Function 1.b of Table 3.3.5.1-1,

<u>OR</u>

2. Conformance to the approved control rod sequence for the Low Power PHYSICS TEST is verified by a second licensed operator or other qualified member of the technical staff;

b. Each withdrawn control rod shall be coupled to the associated CRD;

c. All control rod withdrawals that are not in compliance with the Ganged Withdrawal Sequence Restrictions (GWSR) shall be made using either the NOTCH withdrawal mode or the STEP withdrawal mode;

d. No other CORE ALTERATIONS are in progress;

e. REACTOR THERMAL POWER ≤ 1% RTP; and

f. Average reactor coolant temperature ≤ 93°C (200°F)

APPLICABILITY: MODE 5 with the reactor mode switch in startup/hot standby position.

ACTIONS

CONDITION	REQUIRED ACTION	COMPLETION TIME
A. One or more of the above requirements not met.	A.1 Place the reactor mode switch in the shutdown or refuel position.	Immediately

SURVEILLANCE REQUIREMENTS

SURVEILLANCE		FREQUENCY
SR 3.10.11.1	----------NOTE---------- Not required to be met if SR 3.10.11.2 satisfied. ---------- Perform the applicable SRs for LCO 3.3.5.1, Function 1.b.	According to the applicable SRs
SR 3.10.11.2	----------NOTE---------- Not required to be met if SR 3.10.11.1 satisfied. ---------- Verify movement of control rods is in compliance with the approved control rod sequence for the Low Power PHYSICS TEST by a second licensed operator or other qualified member of the technical staff.	During control rod movement
SR 3.10.11.3	Verify no other CORE ALTERATIONS are in progress.	12 hours

SURVEILLANCE REQUIREMENTS (continued)

SURVEILLANCE		FREQUENCY
SR 3.10.11.4	Verify each withdrawn control rod does not go to the withdrawn overtravel position.	Prior to satisfying LCO 3.10.11.b requirement after work on control rod or CRD System that could affect coupling AND Once the first time the control rod is withdrawn to "full out" position after the associated orificed fuel support has been moved
SR 3.10.11.5	Verify REACTOR THERMAL POWER ≤ 1% RTP.	1 hour
SR 3.10.11.6	Verify average reactor coolant temperature is ≤ 93°C.	1 hour

3.10 SPECIAL OPERATIONS

3.10.12 Multiple Control Rod Drive Subassembly Removal – Refueling

LCO 3.10.12 The requirements of LCO 3.9.3, “Control Rod Position”; LCO 3.9.4, “Control Rod Position Indication”; and LCO 3.9.5, “Control Rod OPERABILITY – Refueling,” may be suspended, and the “full in” position indicators may be bypassed for any number of control rods in MODE 5, to allow removal of control rod drive subassemblies with the control rods maintained fully inserted by their applicable anti-rotation devices, provided the following requirements are met:

a. No two adjacent (face or diagonal) control rod drives are to have their subassemblies removed concurrently unless one of the two adjacent control rods has its four fuel assemblies removed from its associated core cell, and

b. All other control rods in core cells containing one or more fuel assemblies are fully inserted.

APPLICABILITY: MODE 5 with LCO 3.9.3, LCO 3.9.4, or LCO 3.9.5 not met.

ACTIONS

CONDITION	REQUIRED ACTION	COMPLETION TIME
A. One or more of the above requirements not met.	A.1 Suspend removal of associated CRD subassemblies.	Immediately
	AND	
	A.2.1 Initiate action to fully insert all control rods in core cells containing one or more fuel assemblies.	Immediately
	OR	
	A.2.2 Initiate action to satisfy the requirements of this LCO.	Immediately

SURVEILLANCE REQUIREMENTS

SURVEILLANCE		FREQUENCY
SR 3.10.12.1	Verify the applicable anti-rotation devices associated with each CRD subassembly removal are in the correct position to maintain the control rod fully inserted.	24 hours
SR 3.10.12.2	For each control rod with its associated CRD subassembly removed, verify from over the reactor vessel that the top of the control rod is visible at its fully inserted position.	24 hours
SR 3.10.12.3	Verify all other control rods in core cells containing one or more fuel assemblies are fully inserted.	24 hours

B 3.0 LIMITING CONDITION FOR OPERATION (LCOs) AND SURVEILLANCE REQUIREMENTS (SRs)

BASES

LCOs

LCO 3.0.1 through LCO 3.0.7 establish the general requirements applicable to all Specifications and apply at all times, unless otherwise stated.

LCO 3.0.1

LCO 3.0.1 establishes the Applicability statement within each individual Specification as the requirement for when the LCO is required to be met (i.e., when the unit is in the MODES or other specified conditions of the Applicability statement of each Specification).

LCO 3.0.2

LCO 3.0.2 establishes that upon discovery of a failure to meet an LCO, the associated ACTIONS shall be met. The Completion Time of each Required Action for an ACTIONS Condition is applicable from the point in time that an ACTIONS Condition is entered. The Required Actions establish those remedial measures that must be taken within specified Completion Times when the requirements of an LCO are not met. This Specification establishes that:

a. Completion of the Required Actions within the specified Completion Times constitutes compliance with a Specification; and

b. Completion of the Required Actions is not required when an LCO is met within the specified Completion Time, unless otherwise specified.

There are two basic types of Required Actions. The first type of Required Action specifies a time limit in which the LCO must be met. This time limit is the Completion Time to restore an inoperable system or component to OPERABLE status or to restore variables to within specified limits. If this type of Required Action is not completed within the specified Completion Time, a shutdown may be required to place the unit in a MODE or condition in which the Specification is not applicable. (Whether stated as a Required Action or not, correction of the entered Condition is an action that may always be considered upon entering ACTIONS.) The second type of Required Action specifies the remedial measures that permit

BASES

LCOs

LCO 3.0.2 (continued)

continued operation of the unit that is not further restricted by the Completion Time. In this case, compliance with the Required Actions provides an acceptable level of safety for continued operation.

Completing the Required Actions is not required when an LCO is met or is no longer applicable, unless otherwise stated in the individual Specifications.

The nature of some Required Actions of some Conditions necessitates that, once the Condition is entered, the Required Actions must be completed even though the associated Conditions no longer exist. The individual LCO's ACTIONS specify the Required Actions where this is the case. An example of this is in LCO 3.8.1, “AC Sources – Operating.”

The Completion Times of the Required Actions are also applicable when a system or component is removed from service intentionally. The reasons for intentionally relying on the ACTIONS include, but are not limited to, performance of Surveillances, preventive maintenance, corrective maintenance, or investigation of operational problems. Entering ACTIONS for these reasons must be done in a manner that does not compromise safety. Intentional entry into ACTIONS should not be made for operational convenience. Alternatives that would not result in redundant equipment being inoperable should be used instead. Doing so limits the time both subsystems/divisions of a safety function are inoperable and limits the time other conditions exist which result in LCO 3.0.3 being entered. Individual Specifications may specify a time limit for performing an SR when equipment is removed from service or bypassed for testing. In this case, the Completion Times of the Required Actions are applicable when this time limit expires, if the equipment remains removed from service or bypassed.

When a change in MODE or other specified condition is required to comply with Required Actions, the unit may enter a MODE or other specified condition in which another Specification becomes applicable. In this case, the Completion Times of the associated Required Actions would apply from the point in time that the new Specification becomes applicable and the ACTIONS Condition(s) are entered.

BASES

LCOs

LCO 3.0.3 (continued)

LCO 3.0.3 establishes the actions that must be implemented when an LCO is not met and:

a. An associated Required Action and Completion Time is not met and no other Condition applies; or

b. The condition of the unit is not specifically addressed by the associated ACTIONS. This means that no combination of Conditions stated in the ACTIONS can be made that exactly corresponds to the actual condition of the unit. Sometimes, possible combinations of Conditions are such that entering LCO 3.0.3 is warranted; in such cases, the ACTIONS specifically state a Condition corresponding to such combinations and also that LCO 3.0.3 be entered immediately.

This Specification delineates the time limits for placing the unit in a safe MODE or other specified condition when operation cannot be maintained within the limits for safe operation as defined by the LCO and its ACTIONS. It is not intended to be used as an operational convenience that permits routine voluntary removal of redundant systems or components from service in lieu of other alternatives that would not result in redundant systems or components being inoperable.

Upon entering LCO 3.0.3, 1 hour is allowed to prepare for an orderly shutdown before initiating a change in unit operation. This includes time to permit the operator to coordinate the reduction in electrical generation with the load dispatcher to ensure the stability and availability of the electrical grid. The time limits specified to reach lower MODES of operation permit the shutdown to proceed in a controlled and orderly manner that is well within the specified maximum cooldown rate and within the capabilities of the unit, assuming that only the minimum required equipment is OPERABLE. This reduces thermal stresses on components of the Reactor Coolant System and the potential for a plant upset that could challenge safety systems under conditions to which this Specification applies. The use and interpretation of specified times to complete the actions of LCO 3.0.3 are consistent with the discussion of Section 1.3, Completion Times.

A unit shutdown required in accordance with LCO 3.0.3 may be terminated and LCO 3.0.3 exited if any of the following occurs:

BASES

LCOs

LCO 3.0.3 (continued)

a. The LCO is now met.

b. A Condition exists for which the Required Actions have now been performed.

c. ACTIONS exist that do not have expired Completion Times. These Completion Times are applicable from the point in time that the Condition is initially entered and not from the time LCO 3.0.3 is exited.

The time limits of Specification 3.0.3 allow 37 hours for the unit to be in MODE 4 when a shutdown is required during MODE 1 operation. If the unit is in a lower MODE of operation when a shutdown is required, the time limit for reaching the next lower MODE applies. If a lower MODE is reached in less time than allowed, however, the total allowable time to reach MODE 4, or other applicable MODE, is not reduced. For example, if MODE 2 is reached in 2 hours, then the time allowed for reaching MODE 3 is the next 11 hours, because the total time for reaching MODE 3 is not reduced from the allowable limit of 13 hours. Therefore, if remedial measures are completed that would permit a return to MODE 1, a penalty is not incurred by having to reach a lower MODE of operation in less than the total time allowed.

In MODES 1, 2, and 3, LCO 3.0.3 provides actions for Conditions not covered in other Specifications. The requirements of LCO 3.0.3 do not apply in MODES 4 and 5 because the unit is already in the most restrictive Condition required by LCO 3.0.3. The requirements of LCO 3.0.3 do not apply in other specified conditions of the Applicability (unless in MODE 1, 2, or 3) because the ACTIONS of individual Specifications sufficiently define the remedial measures to be taken.

Exceptions to LCO 3.0.3 are provided in instances where requiring a unit shutdown, in accordance with LCO 3.0.3, would not provide appropriate remedial measures for the associated condition of the unit. An example of this is in LCO 3.7.8, “Fuel Pool Water Level.” LCO 3.7.8 has an Applicability of “During movement of irradiated fuel assemblies in the associated fuel storage pool.” Therefore, this LCO can be applicable in any or all MODES. If the LCO and the Required Actions of LCO 3.7.8 are not met while in MODE 1, 2, or 3, there is no safety benefit to be gained by placing the unit in a shutdown condition. The Required Action of LCO 3.7.8 of “Suspend movement of irradiated fuel assemblies in the associated fuel storage pool(s)” is the appropriate Required Action to complete in lieu of the actions of LCO 3.0.3. These exceptions are addressed in the individual Specifications.

BASES

LCOs

LCO 3.0.4

LCO 3.0.4 establishes limitations on changes in MODES or other specified conditions in the Applicability when an LCO is not met. It precludes placing the unit in a different MODE or other specified condition when the following exist:

a. The requirements of an LCO, in the MODE or other specified condition to be entered, are not met; and

b. Continued noncompliance with these LCO requirements would result in the unit being required to be placed in a MODE or other specified condition in which the LCO does not apply to comply with the Required Actions.

Compliance with Required Actions that permit continued operation of the unit for an unlimited period of time in a MODE or other specified condition provides an acceptable level of safety for continued operation. This is without regard to the status of the unit before or after the MODE change. Therefore, in such cases, entry into a MODE or other specified condition in the Applicability may be made in accordance with the provisions of the Required Actions. The provisions of this Specification should not be interpreted as endorsing the failure to exercise the good practice of restoring systems or components to OPERABLE status before unit startup.

The provisions of LCO 3.0.4 shall not prevent changes in MODES or other specified conditions in the Applicability that are required to comply with ACTIONS. In addition, the provisions of LCO 3.0.4 shall not prevent changes in MODES or other specified conditions in the Applicability that result from a normal shutdown.

Exceptions to LCO 3.0.4 are stated in the individual Specifications. Exceptions may apply to all the ACTIONS or to a specific Required Action of a Specification.

Surveillances do not have to be performed on the associated inoperable equipment (or on variables outside the specified limits), as permitted by SR 3.0.1. Therefore, changing MODES or other specified conditions while in an ACTIONS Condition, either in compliance with LCO 3.0.4, or where an exception to LCO 3.0.4 is stated, is not a violation of SR 3.0.1 or SR 3.0.4 for those Surveillances that do not have to be performed due to the associated inoperable equipment. However, SRs must be met to ensure OPERABILITY prior to declaring the associated equipment OPERABLE (or variable within limits) and restoring compliance with the affected LCO.

BASES

LCOs

LCO 3.0.5

LCO 3.0.5 establishes the allowance for restoring equipment to service under administrative controls when it has been removed from service or declared inoperable to comply with ACTIONS. The sole purpose of this Specification is to provide an exception to LCO 3.0.2 (e.g., to not comply with the applicable Required Action(s)) to allow the performance of SRs to demonstrate:

a. The OPERABILITY of the equipment being returned to service;

b. The OPERABILITY of other equipment; or

c. That variables are within limits.

The administrative controls ensure the time the equipment is returned to service in conflict with the requirements of the ACTIONS is limited to the time absolutely necessary to perform the allowed SRs. This Specification does not provide time to perform any other preventive or corrective maintenance.

An example of demonstrating the OPERABILITY of the equipment being returned to service is reopening a containment isolation valve that has been closed to comply with Required Actions, and must be reopened to perform the SRs.

An example of demonstrating the OPERABILITY of other equipment is taking an inoperable channel or trip system out of the tripped condition to prevent the trip function from occurring during the performance of an SR on another channel in the other trip system. A similar example of demonstrating the OPERABILITY of other equipment is taking an inoperable channel or trip system out of the tripped condition to permit the logic to function and indicate the appropriate response during the performance of an SR on another channel in the same trip system.

BASES

LCOs

LCO 3.0.6

LCO 3.0.6 establishes an exception to LCO 3.0.2 for support systems that have an LCO specified in the Technical Specifications (TS). This exception is provided because LCO 3.0.2 would require that the Conditions and Required Actions of the associated inoperable supported system LCO be entered solely due to the inoperability of the support system. This exception is justified because the actions that are required to ensure the plant is maintained in a safe condition are specified in the support system LCO's Required Actions. These Required Actions may include entering the supported system's Conditions and Required Actions or may specify other Required Actions.

When a support system is inoperable and there is an LCO specified for it in the TS, the supported system(s) are required to be declared inoperable if determined to be inoperable as a result of the support system inoperability. However, it is not necessary to enter into the supported systems' Conditions and Required Actions unless directed to do so by the support system's Required Actions. The potential confusion and inconsistency of requirements related to the entry into multiple support and supported systems' LCOs' Conditions and Required Actions are eliminated by providing all the actions that are necessary to ensure the plant is maintained in a safe condition in the support system's Required Actions.

However, there are instances where a support system's Required Action may either direct a supported system to be declared inoperable or direct entry into Conditions and Required Actions for the supported system. This may occur immediately or after some specified delay to perform some other Required Action. Regardless of whether it is immediate or after some delay, when a support system's Required Action directs a supported system to be declared inoperable or directs entry into Conditions and Required Actions for a supported system, the applicable Conditions and Required Actions shall be entered in accordance with LCO 3.0.2.

Specification 5.6, "Safety Function Determination Program" (SFDP), ensures loss of safety function is detected and appropriate actions are taken. Upon failure to meet two or more LCOs concurrently, an evaluation shall be made to determine if loss of safety function exists. Additionally, other limitations, remedial actions, or compensatory actions may be identified as a result of the support system inoperability and corresponding exception to entering supported system Conditions and Required Actions. The SFDP implements the requirements of LCO 3.0.6.

BASES

LCOs

LCO 3.0.6 (continued)

Cross division checks to identify a loss of safety function for those support systems that support safety systems are required. The cross division check verifies that the supported systems of the redundant OPERABLE support system are OPERABLE, thereby ensuring safety function is retained. If this evaluation determines that a loss of safety function exists, the appropriate Conditions and Required Actions of the LCO in which the loss of safety function exists are required to be entered.

LCO 3.0.7

There are certain special tests and operations required to be performed at various times over the life of the unit. These special tests and operations are necessary to demonstrate select unit performance characteristics, to perform special maintenance activities, and to perform special evolutions. Special Operations LCOs in Section 3.10 allow specified TS requirements to be changed to permit performances of these special tests and operations, which otherwise could not be performed if required to comply with the requirements of these TS. Unless otherwise specified, all the other TS requirements remain unchanged. This will ensure all appropriate requirements of the MODE or other specified condition not directly associated with or required to be changed to perform the special test or operation will remain in effect.

The Applicability of a Special Operations LCO represents a condition not necessarily in compliance with the normal requirements of the TS. Compliance with Special Operations LCOs is optional. A special operation may be performed either under the provisions of the appropriate Special Operations LCO or under the other applicable TS requirements. If it is desired to perform the special operation under the provisions of the Special Operations LCO, the requirements of the Special Operations LCO shall be followed. When a Special Operations LCO requires another LCO to be met, only the requirements of the LCO statement are required to be met regardless of that LCO's Applicability (i.e., should the requirements of this other LCO not be met, the ACTIONS of the Special Operations LCO apply, not the ACTIONS of the other LCO). However, there are instances where the Special Operations LCO ACTIONS may direct the other LCOs' ACTIONS be met. The Surveillances of the other LCO are not required to be met, unless specified in the Special Operations LCO. If conditions exist such that the Applicability of any other LCO is met, all the other LCO's requirements (ACTIONS and SRs) are required to be met concurrent with the requirements of the Special Operations LCO.

BASES

SURVEILLANCE REQUIREMENTS

SR 3.0.1 through SR 3.0.4 establish the general requirements applicable to all Specifications and apply at all times, unless otherwise stated.

SR 3.0.1

SR 3.0.1 establishes the requirement that SRs must be met during the MODES or other specified conditions in the Applicability for which the requirements of the LCO apply, unless otherwise specified in the individual SRs. This Specification is to ensure that Surveillances are performed to verify the OPERABILITY of systems and components, and that variables are within specified limits. Failure to meet a Surveillance within the specified Frequency, in accordance with SR 3.0.2, constitutes a failure to meet an LCO.

Systems and components are assumed to be OPERABLE when the associated SRs have been met. Nothing in this Specification, however, is to be construed as implying that systems or components are OPERABLE when:

a. The systems or components are known to be inoperable, although still meeting the SRs; or

b. The requirements of the Surveillance(s) are known to be not met between required Surveillance performances.

Surveillances do not have to be performed when the unit is in a MODE or other specified condition for which the requirements of the associated LCO are not applicable, unless otherwise specified. The SRs associated with a Special Operations LCO are only applicable when the Special Operations LCO is used as an allowable exception to the requirements of a Specification.

Surveillances, including Surveillances invoked by Required Actions, do not have to be performed on inoperable equipment because the ACTIONS define the remedial measures that apply. Surveillances have to be met and performed in accordance with SR 3.0.2, prior to returning equipment to OPERABLE status.

Upon completion of maintenance, appropriate post maintenance testing is required to declare equipment OPERABLE. This includes ensuring applicable Surveillances are not failed and their most recent performance is in accordance with SR 3.0.2. Post maintenance testing may not be possible in the current MODE or other specified conditions in the

BASES

SURVEILLANCE REQUIREMENTS

SR 3.0.1 (continued)

Applicability due to the necessary unit parameters not having been established. In these situations, the equipment may be considered OPERABLE provided testing has been satisfactorily completed to the extent possible and the equipment is not otherwise believed to be incapable of performing its function. This will allow operation to proceed to a MODE or other specified condition where other necessary post maintenance tests can be completed. Some examples of this process are:

a. Control rod drive maintenance during refueling that requires scram testing at > 6.55 MPaG. However, if other appropriate testing is satisfactorily completed and the scram time testing of SR 3.1.4.3 is satisfied, the control rod can be considered OPERABLE. This allows startup to proceed to reach 6.55 MPaG to perform other necessary testing.

b. Reactor core isolation cooling (RCIC) maintenance during shutdown that requires system functional tests at a specified pressure. Provided other appropriate testing is satisfactorily completed, startup can proceed with RCIC considered OPERABLE. This allows operation to reach the specified pressure to complete the necessary post maintenance testing.

SR 3.0.2

SR 3.0.2 establishes the requirements for meeting the specified Frequency for Surveillances and any Required Action with a Completion Time that requires the periodic performance of the Required Action on a “once per...” interval.

SR 3.0.2 permits a 25% extension of the interval specified in the Frequency. This extension facilitates Surveillance scheduling and considers plant operating conditions that may not be suitable for conducting the Surveillance (e.g., transient conditions or other ongoing Surveillance or maintenance activities).

The 25% extension does not significantly degrade the reliability that results from performing the Surveillance at its specified Frequency. This is based on the recognition that the most probable result of any particular Surveillance being performed is the verification of conformance with the

BASES

SURVEILLANCE REQUIREMENTS

SR 3.0.2 (continued)

SRs. The exceptions to SR 3.0.2 are those Surveillances for which the 25% extension of the interval specified in the Frequency does not apply. These exceptions are stated in the individual Specifications. An example of where SR 3.0.2 does not apply is a Surveillance with a Frequency of "in accordance with 10 CFR 50, Appendix J, as modified by approved exemptions." The requirements of regulations take precedence over the TS. The TS cannot in and of themselves extend a test interval specified in the regulations. Therefore, there is a Note in the Frequency stating, "SR 3.0.2 is not applicable."

As stated in SR 3.0.2, the 25% extension also does not apply to the initial portion of a periodic Completion Time that requires performance on a "once per ..." basis. The 25% extension applies to each performance after the initial performance. The initial performance of the Required Action, whether it is a particular Surveillance or some other remedial action, is considered a single action with a single Completion Time. One reason for not allowing the 25% extension to this Completion Time is that such an action usually verifies that no loss of function has occurred by checking the status of redundant or diverse components or accomplishes the function of the inoperable equipment in an alternative manner.

The provisions of SR 3.0.2 are not intended to be used repeatedly merely as an operational convenience to extend Surveillance intervals (other than those consistent with refueling intervals) or periodic Completion Time intervals beyond those specified.

SR 3.0.3

SR 3.0.3 establishes the flexibility to defer declaring affected equipment inoperable or an affected variable outside the specified limits when a Surveillance has not been completed within the specified Frequency. A delay period of up to 24 hours or up to the limit of the specified Frequency, whichever is less, applies from the point in time that it is discovered that the Surveillance has not been performed in accordance with SR 3.0.2, and not at the time that the specified Frequency was not met. This delay period provides adequate time to complete Surveillances that have been missed. This delay period permits the completion of a Surveillance before complying with Required Actions or other remedial measures that might preclude completion of the Surveillance.

BASES

SURVEILLANCE REQUIREMENTS

SR 3.0.3 (continued)

The basis for this delay period includes consideration of unit conditions, adequate planning, availability of personnel, the time required to perform the Surveillance, the safety significance of the delay in completing the required Surveillance, and the recognition that the most probable result of any particular Surveillance being performed is the verification of conformance with the requirements.

When a Surveillance with a Frequency based not on time intervals, but upon specified unit conditions or operational situations, is discovered not to have been performed when specified, SR 3.0.3 allows the full delay period of 24 hours to perform the Surveillance. SR 3.0.3 also provides a time limit for completion of Surveillances that become applicable as a consequence of MODE changes imposed by Required Actions.

Failure to comply with specified Frequencies for SRs is expected to be an infrequent occurrence. Use of the delay period established by SR 3.0.3 is a flexibility which is not intended to be used as an operational convenience to extend Surveillance intervals.

If a Surveillance is not completed within the allowed delay period, then the equipment is considered inoperable or the variable then is considered outside the specified limits and the Completion Times of the Required Actions for the applicable LCO Conditions begin immediately upon expiration of the delay period. If a Surveillance is failed within the delay period, then the equipment is inoperable, or the variable is outside the specified limits and the Completion Times of the Required Actions for the applicable Conditions begin immediately upon the failure of the Surveillance.

Completion of the Surveillance within the delay period allowed by this Specification, or within the Completion Time of the ACTIONS, restores compliance with SR 3.0.1.

BASES

SURVEILLANCE REQUIREMENTS

SR 3.0.4

SR 3.0.4 establishes the requirement that all applicable SRs must be met before entry into a MODE or other specified condition in the Applicability.

This Specification ensures that system and component OPERABILITY requirements and variable limits are met before entry into MODES or other specified conditions in the Applicability for which these systems and components ensure safe operation of the unit. This Specification applies to changes in MODES or other specified conditions in the Applicability associated with unit shutdown as well as startup.

The provisions of SR 3.0.4 shall not prevent changes in MODES or other specified conditions in the Applicability that are required to comply with ACTIONS.

The precise requirements for performance of SRs are specified such that exceptions to SR 3.0.4 are not necessary. The specific time frames and conditions necessary for meeting the SRs are specified in the Frequency, in the Surveillance, or both. This allows performance of Surveillances when the prerequisite condition(s) specified in a Surveillance procedure require entry into the MODE or other specified condition in the Applicability of the associated LCO prior to the performance or completion of a Surveillance. A Surveillance that could not be performed until after entering the LCO Applicability would have its Frequency specified such that it is not “due” until the specific conditions needed are met. Alternately, the Surveillance may be stated in the form of a Note as not required (to be met or performed) until a particular event, condition, or time has been reached. Further discussion of the specific formats of SRs’ annotation is found in Section 1.4, Frequency.

B 3.1 REACTIVITY CONTROL SYSTEMS

B 3.1.1 SHUTDOWN MARGIN (SDM)

BASES

BACKGROUND

SDM requirements are specified to ensure:

a. The reactor can be made subcritical from all operating conditions and transients and Design Basis Events;

b. The reactivity transients associated with postulated accident conditions are controllable within acceptable limits; and

c. The reactor will be maintained sufficiently subcritical to preclude inadvertent criticality in the shutdown condition.

These requirements are satisfied by the control rods, as described in GDC 26 (Ref. 1), which can compensate for the reactivity effects of the fuel and water temperature changes experienced during all operating conditions.

APPLICABLE SAFETY ANALYSES

The control rod removal error during refueling event analysis (Ref. 2) assumes the core is subcritical with the highest worth control rod withdrawn. The analysis of this reactivity insertion event assumes the refueling interlocks are OPERABLE when the reactor is in the refueling mode of operation. These interlocks prevent the withdrawal of more than one control rod, or control rod pair, from the core during refueling. (Special consideration and requirements for multiple control rod withdrawal during refueling are covered in Special Operations LCO 3.10.6, “Multiple Control Rod Withdrawal – Refueling.”) The analysis assumes this condition is acceptable since the core will be shut down with the highest worth control rod or rod pair withdrawn, if adequate SDM has been demonstrated.

Prevention or mitigation of reactivity insertion events is necessary to limit energy deposition in the fuel to prevent significant fuel damage, which could result in undue release of radioactivity. Adequate SDM ensures inadvertent criticalities will not cause significant fuel damage.

SDM satisfies Criterion 2 of the NRC Policy Statement.

BASES

LCO

The specified SDM limit accounts for the uncertainty in the demonstration of SDM by testing. Separate SDM limits are provided for testing where the highest worth control rod or rod pair is determined analytically or by measurement. This is due to the reduced uncertainty in the SDM test when the highest worth control rod or rod pair is determined by measurement. When SDM is demonstrated by calculations not associated with a test (i.e., to confirm SDM during the fuel loading sequence), additional margin is included to account for uncertainties in the calculation. To ensure adequate SDM during the design process, a design margin is included to account for uncertainties in the design calculations (Ref. 3).

APPLICABILITY

In MODES 1 and 2, SDM must be provided because subcriticality with the highest worth control rod or rod pair withdrawn is assumed in the analysis (Ref. 4). In MODES 3 and 4, SDM is required to ensure the reactor will be held subcritical with margin for a single withdrawn control rod or rod pair. SDM is required in MODE 5 to prevent an inadvertent criticality during the withdrawal of a single control rod from a core cell containing one or more fuel assemblies or of a control rod pair from loaded core cells during scram time testing.

ACTIONS

A.1

With SDM not within the limits of the LCO in MODE 1 or 2, SDM must be restored within 6 hours. Failure to meet the specified SDM may be caused by a control rod that cannot be inserted. The 6 hour Completion Time is acceptable, considering that the reactor can still be shut down, assuming no additional failures of control rods to insert, and the low probability of an event occurring during this interval.

B.1

If the SDM cannot be restored, the plant must be brought to MODE 3 within 12 hours, to prevent the potential for further reductions in available SDM (e.g., additional stuck control rods). The allowed Completion Time of 12 hours is reasonable, based on operating experience, to reach MODE 3 from full power conditions in an orderly manner and without challenging plant systems.

BASES

ACTIONS (continued)

C.1

With SDM not within limits in MODE 3, the operator must immediately initiate action to fully insert all insertable control rods. Action must continue until all insertable control rods are fully inserted. This action results in the least reactive condition for the core.

D.1, D.2, D.3, and D.4

With SDM not within limits in MODE 4, the operator must immediately initiate action to fully insert all insertable control rods. This action results in the least reactive condition for the core. Actions must also be initiated within 1 hour to provide means for control of potential radioactive releases. This includes ensuring secondary containment (LCO 3.6.4.1, “Secondary Containment”) is OPERABLE; at least one Standby Gas Treatment (SGT) subsystem (LCO 3.6.4.3, “Standby Gas Treatment (SGT) System”) is OPERABLE; and at least one secondary containment isolation valve (LCO 3.6.4.2, “Secondary Containment Isolation Valves (SCIVs)”) and associated instrumentation (LCO 3.3.1.4, “ESF Actuation Instrumentation”) are OPERABLE in each associated penetration flow path not isolated. This may be performed as an administrative check, by examining logs or other information, to determine if the components are out of service for maintenance or other reasons. It is not necessary to perform the SRs needed to demonstrate the OPERABILITY of the components. If, however, any required component is inoperable, then it must be restored to OPERABLE status. In this case, SRs may need to be performed to restore the component to OPERABLE status. Actions must continue until all required components are OPERABLE.

E.1, E.2, E.3, E.4, and E.5

With SDM not within limits in MODE 5, the operator must immediately suspend CORE ALTERATIONS that could reduce SDM, e.g., insertion of fuel in the core or the withdrawal of control rods. Suspension of these activities shall not preclude completion of movement of a component to a safe condition. Inserting control rods or removing fuel from the core will reduce the total reactivity and are therefore excluded from the suspended actions.

Action must also be immediately initiated to fully insert all insertable control rods in core cells containing one or more fuel assemblies. Action must continue until all insertable control rods in core cells containing one or more fuel assemblies have been fully inserted. Control rods in core

BASES

ACTIONS (continued)

E.1, E.2, E.3, E.4, and E.5 (continued)

cells containing no fuel assemblies do not affect the reactivity of the core and therefore do not have to be inserted.

Action must also be initiated within 1 hour to provide means for control of potential radioactive releases. This includes ensuring secondary containment (LCO 3.6.4.1) is OPERABLE; at least one SGT subsystem (LCO 3.6.4.3) is OPERABLE; and at least one secondary containment isolation valve (LCO 3.6.4.2) and associated instrumentation (LCO 3.3.1.4) are OPERABLE in each associated penetration flow path not isolated. This may be performed as an administrative check, by examining logs or other information, to determine if the components are out of service for maintenance or other reasons. It is not necessary to perform the SRs needed to demonstrate the OPERABILITY of the components. If, however, any required component is inoperable, then it must be restored to OPERABLE status. In this case, SRs may need to be performed to restore the component to OPERABLE status. Actions must continue until all required components are OPERABLE.

SURVEILLANCE REQUIREMENTS

SR 3.1.1.1

Adequate SDM must be demonstrated to ensure the reactor can be made subcritical from any initial operating condition. Adequate SDM is demonstrated by testing before or during the first startup after fuel movement, control rod replacement, or shuffling within the reactor pressure vessel. Control rod replacement refers to the decoupling and removal of a control rod from a core location, and subsequent replacement with a new control rod or a control rod from another core location. Since core reactivity will vary during the cycle as a function of fuel depletion and poison burnup, the beginning of cycle (BOC) test must also account for changes in core reactivity during the cycle. Therefore, to obtain the SDM, the initial measured value must be increased by an adder, “R”, which is the difference between the calculated value of maximum core reactivity during the operating cycle and the calculated BOC core reactivity. If the value of R is negative (i.e., BOC is the most reactive point in the cycle), no correction to the BOC measured value is required (Ref. 4). For the SDM demonstrations that rely solely on calculation, additional margin (0.10% $\Delta k/k$) must be added to the SDM limit of 0.28% $\Delta k/k$ to account for uncertainties in the calculation of the highest worth control rod or control rod pair.

The SDM may be demonstrated during an in sequence control rod pair withdrawal, in which the highest worth control rod pair is analytically

BASES

SURVEILLANCE REQUIREMENTS (continued)

SR 3.1.1.1 (continued)

determined, or during local criticals, where the highest worth control rod pair is determined by testing. Local critical tests require the withdrawal of out of sequence control rods. This testing is performed in accordance with LCO 3.10.7, "Control Rod Testing – Operating" or LCO 3.10.8, "SDM Test – Refueling" where additional requirements are required to be met.

The Frequency of 4 hours after reaching criticality is allowed to provide a reasonable amount of time to perform the required calculations and appropriate verification.

During MODE 5, adequate SDM is also required to ensure the reactor does not reach criticality during control rod withdrawals. An evaluation of each in vessel fuel movement during fuel loading (including shuffling fuel within the core) is required to ensure adequate SDM is maintained during refueling. This evaluation ensures the intermediate loading patterns are bounded by the safety analyses for the final core loading pattern. For example, bounding analyses that demonstrate adequate SDM for the most reactive configurations during the refueling may be performed to demonstrate acceptability of the entire fuel movement sequence. These bounding analyses include additional margins to the SDM limit ot account for the associated uncertainties. Spiral offload or reload sequences inherently satisfy the SR, provided the fuel assemblies are reloaded in the same configuration analyzed for the new cycle. Removing fuel from the core will always result in an increase in SDM.

REFERENCES

1. 10 CFR 50, Appendix A, GDC 26.

2. DCD Tier 2, Section 15.4.1.

3. DCD Tier 2, Section 4.3.2.

4. NDE-24011-P-A-9, "GE Standard Application for Reactor Fuel," Section 3.2.4.1, Sept. 1988.

B 3.1 REACTIVITY CONTROL SYSTEMS

B 3.1.2 Reactivity Anomalies

BASES

BACKGROUND

In accordance with GDC 26, GDC 28, and GDC 29 (Ref. 1), reactivity shall be controllable such that subcriticality is maintained under cold conditions and acceptable fuel design limits are not exceeded during normal operation and anticipated operational occurrences. Reactivity anomaly is used as a measure of the predicted versus measured core reactivity during power operation. The continual confirmation of core reactivity is necessary to ensure that the Design Basis Accident (DBA) and transient safety analyses remain valid. A large reactivity anomaly could be the result of unanticipated changes in fuel reactivity, control rod worth, or operation at conditions not consistent with those assumed in the predictions of core reactivity, and could potentially result in a loss of SDM or violation of acceptable fuel design limits. Comparing predicted versus measured core reactivity validates the nuclear methods used in the safety analysis and supports the SDM demonstrations (LCO 3.1.1, “SHUTDOWN MARGIN (SDM)”) in ensuring the reactor can be brought safely to cold, subcritical conditions.

When the reactor core is critical or in normal power operation, a reactivity balance exists and the net reactivity is zero. A comparison of predicted and measured reactivity is convenient under such a balance, since parameters are being maintained relatively stable under steady state power conditions. The positive reactivity inherent in the core design is balanced by the negative reactivity of the control components, thermal feedback, neutron leakage, and materials in the core that absorb neutrons, such as burnable absorbers, producing zero net reactivity.

In order to achieve the required fuel cycle energy output, the uranium enrichment in the new fuel loading and the fuel loaded in the previous cycles provide excess positive reactivity beyond that required to sustain steady state operation at the beginning of cycle (BOC). When the reactor is critical at RTP and operating moderator temperature, the excess positive reactivity is compensated by burnable absorbers (if any), control rods, and whatever neutron poisons (mainly xenon and samarium) are present in the fuel.

The predicted core reactivity, as represented by k effective (k_{eff}), is calculated by a 3D core simulator code as a function of cycle exposure. This calculation is performed for projected operating states and conditions throughout the cycle. The monitored k_{eff} is calculated by the core monitoring system for actual plant conditions and is then compared to the predicted value for the cycle exposure.

APPLICABLE SAFETY ANALYSES

Accurate prediction of core reactivity is either an explicit or implicit assumption in the accident analysis evaluations. Every accident evaluation (Ref. 2) is, therefore, dependent upon accurate evaluation of core reactivity. In particular, SDM and reactivity transients, such as control rod withdrawal events, are very sensitive to accurate prediction of core reactivity. These accident analysis evaluations rely on computer codes that have been qualified against available test data, operating plant data, and analytical benchmarks. Monitoring reactivity anomaly provides additional assurance that the nuclear methods provide an accurate representation of the core reactivity.

The comparison between measured and predicted initial core reactivity provides a normalization for the calculational models used to predict core reactivity. If the measured and predicted k_{eff} for identical core conditions at BOC do not reasonably agree, then the assumptions used in the reload cycle design analysis or the calculation models used to predict k_{eff} may not be accurate. If reasonable agreement between measured and predicted core reactivity exists at BOC, then the prediction may be normalized to the measured value. Thereafter, any significant deviations in the measured k_{eff} from the predicted k_{eff} that develop during fuel depletion may be an indication that the assumptions of the DBA and transient analyses are no longer valid, or that an unexpected change in core conditions has occurred.

Reactivity anomalies satisfy Criterion 2 of the NRC Policy Statement.

LCO

The reactivity anomaly limit is established to ensure plant operation is maintained within the assumptions of the safety analyses. Large differences between monitored and predicted core reactivity may indicate that the assumptions of the DBA and transient analyses are no longer valid, or that the uncertainties in the Nuclear Design Methodology are larger than expected. A limit on the difference between the monitored core k_{eff} and the predicted core k_{eff} of 1% $\Delta k/k$ has been established based on engineering judgment. A > 1% deviation in reactivity from that predicted is larger than expected for normal operation and should therefore be evaluated.

APPLICABILITY

In MODE 1, most of the control rods are withdrawn and steady state operation is typically achieved. Under these conditions, the comparison between predicted and monitored core reactivity provides an effective measure of the reactivity anomaly. In MODE 2, control rods are typically being withdrawn during a startup. In MODES 3 and 4, all control rods are fully inserted, and, therefore, the reactor is in the least reactive state,

BASES

APPLICABILITY (continued)

where monitoring core reactivity is not necessary. In MODE 5, fuel loading results in a continually changing core reactivity. SDM requirements (LCO 3.1.1) ensure that fuel movements are performed within the bounds of the safety analysis, and an SDM demonstration is required during the first startup following operations that could have altered core reactivity (e.g., fuel movement, control rod replacement, control rod shuffling). The SDM test, required by LCO 3.1.1, provides a direct comparison of the predicted and monitored core reactivity at cold conditions; therefore, reactivity anomaly is not required during these conditions.

ACTIONS

A.1

Should an anomaly develop between measured and predicted core reactivity, the core reactivity difference must be restored to within the limit to ensure continued operation is within the core design assumptions. Restoration to within the limit could be performed by an evaluation of the core design and safety analysis to determine the reason for the anomaly. This evaluation normally reviews the core conditions to determine their consistency with input to design calculations. Measured core and process parameters are also normally evaluated to determine that they are within the bounds of the safety analysis, and safety analysis calculational models may be reviewed to verify that they are adequate for representation of the core conditions. The required Completion Time of 72 hours is based on the low probability of a DBA during this period, and allows sufficient time to assess the physical condition of the reactor and complete the evaluation of the core design and safety analysis.

B.1

If the core reactivity cannot be restored to within the 1% $\Delta k/k$ limit, the plant must be brought to a MODE in which the LCO does not apply. To achieve this status, the plant must be brought to at least MODE 3 within 12 hours. The allowed Completion Time of 12 hours is reasonable, based on operating experience, to reach MODE 3 from full power conditions in an orderly manner and without challenging plant systems.

BASES

SURVEILLANCE REQUIREMENTS

SR 3.1.2.1

Verifying the reactivity difference between the monitored and predicted core k_{eff} is within the limits of the LCO provides further assurance that plant operation is maintained within the assumptions of the DBA and transient analyses. The Core Monitoring System calculates the core k_{eff} for the reactor conditions obtained from plant instrumentation. A comparison of the monitored core k_{eff} to the predicted core k_{eff} at the same cycle exposure is used to calculate the reactivity difference. The comparison is required when the core reactivity has potentially changed by a significant amount. This may occur following a refueling in which new fuel assemblies are loaded, fuel assemblies are shuffled within the core, or control rods are replaced or shuffled. Control rod replacement refers to the decoupling and removal of a control rod from a core location, and subsequent replacement with a new control rod or a control rod from another core location. Also, core reactivity changes during the cycle. The 24 hour interval after reaching equilibrium conditions following a startup is based on the need for equilibrium xenon concentrations in the core, such that accurate comparison between the monitored and predicted core k_{eff} values can be made. For the purposes of this SR, the reactor is assumed to be at equilibrium conditions when steady state operations (no control rod movement or core flow changes) at ≥ 75% RTP have been obtained. The 1000 MW • d/t Frequency was developed, considering the relatively slow change in core reactivity with exposure and operating experience related to variations in core reactivity. This comparison requires the core to be operating at power levels which minimize the uncertainties and measurement errors, in order to obtain meaningful results. Therefore, the comparison is only done when in MODE 1.

REFERENCES

1. 10 CFR 50, Appendix A, GDC 26, GDC 28, and GDC 29.

2. DCD Tier 2, Chapter 15.

B 3.1 REACTIVITY CONTROL SYSTEMS

B 3.1.3 Control Rod OPERABILITY

BASES

BACKGROUND

Control rods are components of the Control Rod Drive (CRD) System, which is the primary reactivity control system for the reactor. In conjunction with the Reactor Protection System, the CRD System provides the means for the reliable control of reactivity changes to ensure that under conditions of normal operation, including anticipated operational occurrences, specified acceptable fuel design limits are not exceeded. In addition, the control rods provide the capability to hold the reactor core subcritical under all conditions and to limit the potential amount and rate of reactivity increase caused by a malfunction in the CRD System. The CRD System is designed to satisfy the requirements of GDC 26, GDC 27, GDC 28, and GDC 29, (Ref. 1).

The CRD System consists of 205 fine motion control rod drive (FMCRD) mechanisms and a 103 hydraulic control unit (HCU) assemblies. The FMCRD is an electro-hydraulic actuated mechanism that provides normal positioning of the control rods using an electric motor, and scram insertion of the control rods using hydraulic power. The hydraulic power for scram is provided by high pressure water stored in the individual HCU accumulators, each of which supplies sufficient volume to scram two FMCRDs. Normal control rod positioning is performed using a ball-nut and rotating ball-screw arrangement driven by an electric stepping motor. A hollow piston, which is coupled at the upper end to the control rod, rests on the ball-nut. The ball-nut inserts the hollow piston and connected control rod into the core or withdraws them depending on the direction of rotation of the stepping motor. An electromechanical brake mechanism engages the motor drive shaft when the motor is deenergized to prevent inadvertent withdrawal of the control rod, but does not restrict scram insertion.

This Specification, along with LCO 3.1.4, “Control Rod Scram Times,” and LCO 3.1.5, “Control Rod Scram Accumulators,” ensure that the performance of the control rods in the event of a Design Basis Accident (DBA) or transient meets the assumptions used in the safety analyses of References 2, 3, and 4.

BASES

APPLICABLE SAFETY ANALYSES

The analytical methods and assumptions used in the evaluations involving control rods are presented in References 2, 3, and 4.
The control rods provide the primary means for rapid reactivity control (reactor scram), for maintaining the reactor subcritical, and for limiting potential effects of reactivity insertion events caused by malfunctions in the CRD System.

The capability of inserting the control rods ensures that the assumptions for scram reactivity in the DBA and transient analyses are not violated. Since the SDM ensures the reactor will be subcritical with the highest worth control rod pair withdrawn (assumed single failure) of an HCU, the additional failure of a second control rod to insert could invalidate the demonstrated SDM and potentially limit the ability of the CRD System to hold the reactor subcritical. Therefore, the requirement that all control rods be OPERABLE ensures the CRD System can perform its intended function.

The control rods also protect the fuel from damage that could result in release of radioactivity. The limits protected are the MCPR Safety Limit (SL) (see Bases for LCO 3.2.2, “MINIMUM CRITICAL POWER RATIO (MCPR)”), the 1% cladding plastic strain fuel design limit (see Bases for LCO 3.2.1, “AVERAGE PLANAR LINEAR HEAT GENERATION RATE (APLHGR),” and LCO 3.2.3, “LINEAR HEAT GENERATION RATE (LHGR)”), and the fuel damage limit (see Bases for LCO 3.1.6, “Rod Pattern Control”) during reactivity insertion events.

The negative reactivity insertion (scram) provided by the CRD System provides the analytical basis for determination of plant thermal limits and provides protection against fuel damage limits during a Rod Withdrawal Error (RWE) event. Bases for LCO 3.1.4, LCO 3.1.5, and LCO 3.1.6 discuss in more detail how the SLs are protected by the CRD System.

Control rod OPERABILITY satisfies Criterion 3 of the NRC Policy Statement.

LCO

OPERABILITY of an individual control rod is based on a combination of factors, primarily the scram insertion times, the control rod coupling integrity, and the ability to determine the control rod position. Accumulator OPERABILITY is addressed by LCO 3.1.5. Although not all control rods are required to be OPERABLE to satisfy the intended reactivity control requirements, strict control over the number and distribution of inoperable control rods is required to satisfy the assumptions of the DBA and transient analyses.

BASES

APPLICABILITY

In MODES 1 and 2, the control rods are assumed to function during a DBA or transient and are therefore required to be OPERABLE in these MODES. In MODES 3 and 4, control rods are not able to be withdrawn since the reactor mode switch is in Shutdown and a control rod block is applied. This provides adequate requirements for control rod OPERABILITY during these conditions. Control rod requirements in MODE 5 are located in LCO 3.9.5, "Rod OPERABILITY – Refueling."

ACTIONS

The ACTIONS table is modified by a Note indicating that a separate Condition entry is allowed for each control rod. This is acceptable, since the Required Actions for each Condition provide appropriate compensatory actions for each inoperable control rod. Complying with the Required Actions may allow for continued operation, and subsequent inoperable control rods are governed by subsequent Condition entry and application of associated Required Actions.

A.1, A.2, and A.3

A control rod is considered stuck if it will not insert by either FMCRD drive motor torque or scram pressure. The failure of a control rod to insert during SR 3.1.3.2 or SR 3.1.3.3 alone, however, does not necessarily mean that the control rod is stuck, since failure of the motor drive would also result in a failure of these tests. Verification of a stuck rod can be made by attempting to withdraw the rod. If the motor is working and the rod is actually stuck, the traveling nut will back down from the bottom of the drive and a rod separation alarm and rod block will result. Conversely, if the motor drive is known to be failed, the rod is not necessarily inoperable since it is probably still capable of scram. However, at the next required performance of SR 3.1.3.2 or 3.1.3.3, there would be no way of verifying insertability, except by scram. In this case, an individual scram should be attempted. If the rod scrams, the rod is not stuck but should be considered inoperable and bypassed in RCIS since it cannot be withdrawn and a separation situation will exist until the motor is repaired and the traveling nut is run-in to the full in position. If the rod fails to insert by individual scram, it should be considered stuck and the appropriate ACTIONS taken. The failure of a control rod pair to insert is assumed in the design basis transient and accident analyses and therefore, with one withdrawn control rod stuck, some time is allowed to make the control rod insertable.

With a fully inserted control rod stuck, no actions are required as long as the control rod remains fully inserted. The Required Actions are modified by a Note that allows a stuck control rod to be bypassed in the Rod Action

BASES

ACTIONS (continued)

A.1, A.2, and A.3 (continued)

and Position Information (RAPI) Subsystem to allow continued operation. SR 3.3.5.1.7 provides additional requirements when control rods are bypassed in RAPI to ensure compliance with the RWE analysis. With one withdrawn control rod stuck, the control rod must be disarmed within 2 hours. The motor drive may be disarmed by placing the rod in RAPI bypass or by manually disconnecting its power supply. The allowed Completion Time of 2 hours is acceptable, considering the reactor can still be shut down, assuming no additional control rods fail to insert, and provides a reasonable amount of time to perform the Required Action in an orderly manner. Isolating the control rod from scram prevents damage to the CRD and surrounding fuel assemblies should a scram occur. The control rod can be isolated from scram by isolating its associate hydraulic control unit. Two CRDs sharing an HCU can be individually isolated from scram.

Monitoring of the insertion capability of withdrawn control rods must also be performed within 24 hours. SR 3.1.3.2 and SR 3.1.3.3 perform periodic tests of the control rod insertion capability of withdrawn control rods. Testing withdrawn control rods ensures that a generic problem does not exist. The allowed Completion Time of 24 hours provides a reasonable time to test the control rods, considering the potential for a need to reduce power to perform the tests. Required Action A.2 is modified by a Note that states the requirement is not applicable when below the actual low power setpoint (LPSP) of the RCIS, since the notch insertions may not be compatible with the requirements of rod pattern control (LCO 3.1.6) and the RCIS (LCO 3.3.1.2).

To allow continued operation with a withdrawn control rod stuck, an evaluation of adequate SDM is also required within 72 hours. Should a DBA or transient require a shutdown, to preserve the single failure criterion an additional control rod would have to be assumed to have failed to insert when required. Therefore, the original SDM demonstration may not be valid. The SDM must therefore be evaluated (by measurement or analysis) with the stuck control rod at its stuck position and the highest worth OPERABLE control rod pair associated with the same HCU assumed to be fully withdrawn.

With a single control rod stuck in a withdrawn position, the remaining OPERABLE control rods are capable of providing the required scram and shutdown reactivity. Failure to reach MODE 4 is only likely if an additional control rod adjacent to the stuck control rod also fails to insert during a required scram. Even with the postulated additional single failure of an adjacent control rod (and its associated control rod for the

BASES

ACTIONS (continued)

A.1, A.2, and A.3 (continued)

same HCU) to insert, sufficient reactivity control remains to reach and maintain MODE 3 conditions (Ref. 6). Required action A.2 performs a movement test on each remaining withdrawn control rod to ensure that no additional control rods are stuck. Therefore, 72 hours is allowed to perform the analysis to test in Required Action A.3.

B.1 and B.2

With two or more withdrawn control rods stuck, the stuck control rods should be isolated from scram pressure within 2 hours and the plant brought to MODE 3 within 12 hours. Isolating the control rod from scram prevents damage to the CRD and surrounding fuel assemblies should a scram occur. The control rod can be isolated from scram by isolating its associate hydraulic control unit. Two CRDs sharing an HCU can be individually isolated from scram. The occurrence of more than one control rod stuck at a withdrawn position increases the probability that the reactor cannot be shut down if required. Insertion of all insertable control rods eliminates the possibility of an additional failure of a control rod to insert. The allowed Completion Time of 12 hours is reasonable, based on operating experience, to reach MODE 3 from full power conditions in an orderly manner and without challenging plant systems.

C.1 and C.2

With one or more control rods inoperable for reasons other than being stuck in the withdrawn position, operation may continue, provided the control rods are fully inserted within 3 hours and disarmed (however, they do not need to be isolated from scram) within 4 hours. Inserting a control rod ensures the shutdown and scram capabilities are not adversely affected. The control rod is disarmed to prevent inadvertent withdrawal during subsequent operations. The control rods can be disarmed by disconnecting power to the motor drive or by placing the rod in RCIS INOP Bypass. Required Action C.1 is modified by a Note that allows control rods to be bypassed in the RCIS if required to allow insertion of the inoperable control rods and continued operation. Also, as noted, control rods declared inoperable with a failed motor drive can only be inserted by scram. Control rods with failed motor drives are not inoperable for this reason alone, but must be considered so upon failure of SR 3.1.3.2 or SR 3.1.3.3, or when not in compliance with GWSR (see LCO 3.1.6). This does not conflict with SR 3.0.1 since the ability to move the control rod via the FMCRD, as discussed in the bases for SR 3.1.3.2 and SR 3.1.3.3, is required to prove that the rod is not stuck. Likewise,

BASES

ACTIONS (continued)

C.1 and C.2 (continued)

loss of position indication, assuming no rod movement, would not result in control rod(s) inoperability until failure of SR 3.1.3.1. SR 3.3.5.1.7 provides additional requirements when the control rods are bypassed to ensure compliance with the RWE analysis.

The allowed Completion Times are reasonable, considering the small number of allowed inoperable control rods, and provide time to insert and disarm the control rods in an orderly manner and without challenging plant systems.

D.1 and D.2

Out of sequence control rods may increase the potential reactivity worth of a control rod, or gang of control rods, during a RWE and therefore, the distribution of inoperable control rods must be controlled. At ≤ 10% RTP, the generic ganged withdrawal sequence restrictions (GWSR) (which is equivalent to previous banked position withdrawal sequence (BPWS) analysis (Ref. 6) requires inserted control rods not in compliance with GWSR to be separated by at least two OPERABLE control rods in all directions, including the diagonal. Therefore, if two or more inoperable control rods are not in compliance with GWSR and not separated by at least two OPERABLE control rods, action must be taken to restore compliance with GWSR or restore the control rods to OPERABLE status. A Note has been added to the Condition to clarify that the Condition is not applicable when > 10% RTP since the GWSR is not required to be followed under these conditions, as described in the Bases for LCO 3.1.6.

E.1

If any Required Action and associated Completion Time of Condition A, C, D, or E are not met or nine or more inoperable control rods exist, the plant must be brought to a MODE in which the LCO does not apply. To achieve this status, the plant must be brought to MODE 3 within 12 hours. This ensures all insertable control rods are inserted and places the reactor in a condition that does not require the active function (i.e., scram) of the control rods. The number of control rods permitted to be inoperable when operating above 10% RTP could be more than the value specified, but the occurrence of a large number of inoperable control rods could be indicative of a generic problem, and investigation and resolution of the potential problem should be undertaken. The allowed Completion Time of 12 hours is reasonable, based on operating experience, to reach MODE 3 from full power conditions in an orderly manner and without challenging plant systems.

BASES

SURVEILLANCE REQUIREMENTS

SR 3.1.3.1

The position of each control rod must be determined, to ensure adequate information on control rod position is available to the operator for determining CRD OPERABILITY and controlling rod patterns. Control rod position may be determined by the use of OPERABLE position indicators, by moving control rods to a position with an OPERABLE indicator, or by the use of other appropriate methods. The 24 hour Frequency of this SR is based on operating experience related to expected changes in control rod position and the availability of control rod position indications in the control room.

SR 3.1.3.2 and SR 3.1.3.3

Control rod insertion capability is demonstrated by inserting each partially or fully withdrawn control rod at two notches and observing that the control rod moves. The control rod may then be returned to its original position. This ensures the control rod is not stuck and is free to insert on a scram signal. These Surveillances are not required when THERMAL POWER is less than or equal to the actual LPSP of the RCIS since the notch insertions may not be compatible with the requirements of the GWSR (LCO 3.1.6) and the RCIS (LCO 3.3.5.1). The 7 day Frequency of SR 3.1.3.2 is based on operating experience related to the changes in CRD performance and the ease of performing notch testing for fully withdrawn control rods. Partially withdrawn control rods are tested at a 31 day Frequency, based on the potential power reduction required to allow the control rod movement, and considering the large testing sample of SR 3.1.3.2. Furthermore, the 31 day Frequency takes into account operating experience related to changes in CRD performance. At any time, if a control rod is immovable, a determination of that control rod's trippability (OPERABILITY) must be made and appropriate action must be taken.

SR 3.1.3.4

Verifying the scram time for each control rod to 60% rod insertion position is $\leq$ 1.44 seconds provides reasonable assurance that the control rod will insert when required during a DBA or transient, thereby completing its shutdown function. This SR is performed in conjunction with the control rod scram time testing of SR 3.1.4.1, SR 3.1.4.2, SR 3.1.4.3, and SR 3.1.4.4. SRs in LCO 3.3.1.1, “SSLC Sensor Instrumentation”, and LCO 3.3.1.2, “RPS and MSIV Actuation”, overlap this Surveillance to provide complete testing of the assumed safety function. The associated Frequencies are acceptable, considering the more frequent testing performed to demonstrate other aspects of control rod OPERABILITY and operating experience, which shows scram times do not significantly change over an operating cycle.

BASES

SURVEILLANCE REQUIREMENTS (continued)

SR 3.1.3.5

Coupling verification is performed to ensure the control rod is connected to the CRDM and will perform its intended function when necessary. The Surveillance requires verifying that a control rod does not go to the withdrawn overtravel position when it is fully withdrawn. The overtravel position feature provides a positive check on the coupling integrity, since only an uncoupled hollow piston can reach the overtravel position. The verification is required to be performed the first time a control rod is withdrawn to the “full out” position after the associated orificed fuel support has been moved or prior to declaring the control rod OPERABLE after work on the control rod or CRD System that could affect coupling. This Frequency is acceptable, considering the mechanical integrity of the bayonet coupling design of the FMCRDs. The bayonet coupling can only be engaged/disengaged by performing a 45º rotation of the FMCRD mechanism relative to the control rod. This is normally performed by rotating the FMCRD mechanism 45º from below the vessel with the control rod kept from rotating by the orificed fuel support that has been installed from above. Once the coupling is engaged and the FMCRD middle flange is bolted into place, the 45º rotation required for uncoupling cannot be accomplished unless the associated orificed fuel support is removed (which would allow for the control rod to be rotated from above) or the FMCRD middle flange is unbolted (which would allow for rotation of the FMCRD mechanism from below). Therefore, after FMCRD maintenance in which the FMCRD is uncoupled and then recoupled or after the orificed fuel support has been moved, it is required to perform coupling verification the first time the FMCRD is withdrawn to the "full out" position. Thereafter, it is not necessary to check the coupling integrity again until the FMCRD maintenance work has resulted in uncoupling and recoupling, or the orificed fuel support has been moved.

REFERENCES

1. 10 CFR 50, Appendix A, GDC 26, GDC 27, GDC 28, and GDC 29.
2. DCD Tier 2, Section 4.6.2.
3. DCD Tier 2, Section 5.2.2.
4. DCD Tier 2, Section 15.4.1.
5. Not used
6. NEDO-21231, “Banked Position Withdrawal Sequence,” Section 7.2, January 1977.

B 3.1 REACTIVITY CONTROL SYSTEMS

B 3.1.4 Control Rod Scram Times

BASES

BACKGROUND

The scram function of the Control Rod Drive (CRD) System controls reactivity changes during abnormal operational transients to ensure that specified acceptable fuel design limits are not exceeded (Ref. 1). The control rods are scrammed by positive means, using hydraulic pressure exerted on the CRD piston.

A single hydraulic control unit (HCU) powers the scram action of two fine motion control rod drives (FMCRDs). When a scram signal is initiated, control air is vented from the scram valve in each HCU, allowing it to open by spring action. High pressure nitrogen then raises the piston within the HCU accumulator and forces the displaced water through the scram piping to the connected FMCRDs. Inside each FMCRD, the high pressure water lifts the hollow piston off the ball-nut and drives the control rod into the core. A buffer assembly stops the hollow piston at the end of its stroke. Departure from the ball-nut releases spring-loaded latches in the hollow piston that engage slots in the guide tube. These latches support the control rod in the inserted position. The control rod cannot be withdrawn until the ball-nut is driven up and engaged with the hollow piston. Stationary fingers on the ball-nut then cam the latches out of the slots and hold them in the retracted position. A scram action is complete when every FMCRD has reached their fully inserted position.

APPLICABLE SAFETY ANALYSES

The analytical methods and assumptions used in evaluating the control rod scram function are presented in References 2, 3, and 4. The Design Basis Accident (DBA) and transient analyses assume that all of the control rods scram at a specified insertion rate. The resulting negative scram reactivity forms the basis for the determination of plant thermal limits (e.g., the MCPR). Other distributions of scram times (e.g., several control rods scramming slower than the average time, with several control rods scramming faster than the average time) can also provide sufficient scram reactivity. Surveillance of each individual control rod's scram time ensures the scram reactivity assumed in the DBA and transient analyses can be met.

The scram function of the CRD System protects the MCPR Safety Limit (SL) (see Bases for LCO 3.2.2, "MINIMUM CRITICAL POWER RATIO (MCPR)"), and the 1% cladding plastic strain fuel design limit (see Bases

BASES

APPLICABLE SAFETY ANALYSIS (continued)

for LCO 3.2.1, “AVERAGE PLANAR LINEAR HEAT GENERATION RATE (APLHGR),” and LCO 3.2.3, “LINEAR HEAT GENERATION RATE (LHGR)”), which ensure that no fuel damage will occur if these limits are not exceeded. Above 6.55 MPaG, the scram function is designed to insert negative reactivity at a rate fast enough to prevent the actual MCPR from becoming less than the MCPR SL during the analyzed limiting power transient. Below 6.55 MPaG, the scram function is assumed to perform during the Rod Withdrawal Error (RWE) event (Ref. 4) and, therefore, also provides protection against violating fuel damage limits during reactivity insertion accidents (see Bases for LCO 3.1.6, “Rod Pattern Control”). For the reactor vessel overpressure protection analysis, the scram function, along with the safety/relief valves, ensure that the peak vessel pressure is maintained within the applicable ASME Code limits.

Control rod scram times satisfy Criterion 3 of the NRC Policy Statement.

LCO

The scram times specified in Table 3.1.4-1 (in the accompanying LCO) are required to ensure that the scram reactivity assumed in the DBA and transient analysis is met. To account for single failure and “slow” scramming control rods, the scram times specified in Table 3.1.4-1 are faster than those assumed in the design basis analysis. The scram times have a margin to allow up to 8 of the control rods to have scram times that exceed the specified limits (i.e., “slow” control rods) assuming a single stuck control rod (as allowed by LCO 3.1.3, “Control Rod OPERABILITY”) and an additional control rod failing to scram per the single failure criterion. The scram times are specified as a function of reactor steam dome pressure to account for the pressure dependence of the scram times. The scram times are specified relative to measurements based on reed switch positions, which provide the control rod position indication. The reed switch closes (“pickup”) when the hollow piston passes a specific location and then opens (“dropout”) as the hollow piston tube travels upward. Verification of the specified scram times in Table 3.1.4-1 is accomplished through measurement of the “dropout” times.

To ensure that local scram reactivity rates are maintained within acceptable limits, no more than two of the allowed “slow” control rods may occupy adjacent locations.

Table 3.1.4-1 is modified by two Notes, which state control rods with scram times not within the limits of the Table are considered “slow” and that control rods with scram times > 1.44 seconds to 60% rod insertion position are considered inoperable as required by SR 3.1.3.4.

BASES

LCO (continued)

This LCO applies only to OPERABLE control rods since inoperable control rods will be inserted and disarmed (LCO 3.1.3). Slow scramming control rods may be conservatively declared inoperable and not accounted for as “slow” rods.

APPLICABILITY

In MODES 1 and 2, a scram is assumed to function during transients and accidents analyzed for these plant conditions. These events are assumed to occur during startup and power operation; therefore, the scram function of the control rods is required during these MODES. In MODES 3 and 4, the control rods are not able to be withdrawn since the reactor mode switch is in Shutdown and a control rod block is applied. This provides adequate requirements for control rod scram capability during these conditions. Scram requirements in MODE 5 are contained in LCO 3.9.5, “Control Rod OPERABILITY – Refueling.”

ACTIONS

A.1

When the requirements of this LCO are not met, the rate of negative reactivity insertion during a scram may not be within the assumptions of the safety analyses. Therefore the plant must be brought to a MODE in which the LCO does not apply. To achieve this status, the plant must be brought to MODE 3 within 12 hours. The allowed Completion Time of 12 hours is reasonable, based on operating experience, to reach MODE 3 from full power conditions in an orderly manner and without challenging plant systems.

SURVEILLANCE REQUIREMENTS

The four SRs of this LCO are modified by a Note stating that during a single or pair control rod scram time surveillance, the CRD pumps shall be isolated from the associated scram accumulator. With the CRD pump isolated (i.e., charging valve closed), the influence of the CRD pump head does not affect the single or pair control rod scram times. During a full core scram, the CRD pump head would be seen by all control rods and would have a negligible effect on the scram insertion times.

SR 3.1.4.1

The scram reactivity used in DBA and transient analyses is based on assumed control rod scram time. Measurement of the scram times with reactor steam dome pressure $\geq$ 6.55 MPaG demonstrates acceptable scram times for the transients analyzed in References 2 and 3.

BASES

SURVEILLANCE REQUIREMENTS (continued)

SR 3.1.4.1 (continued)

Scram insertion times increase with increasing reactor pressure because of the competing effects of reactor steam dome pressure and stored accumulator energy. Therefore, demonstration of adequate scram times at reactor steam dome pressure greater than 6.55 MPaG ensures that the scram times will be within the specified limits at higher pressures. Limits are specified as a function of reactor pressure to account for the sensitivity of the scram insertion times with pressure and to allow a range of pressures over which scram time testing can be performed. To ensure scram time testing is performed within a reasonable time following a refueling or after a shutdown ≥ 120 days, all control rods are required to be tested before exceeding 40% RTP. This Frequency is acceptable, considering the additional surveillances performed for control rod OPERABILITY, the frequent verification of adequate accumulator pressure, and the required testing of control rods affected by work on control rods or the CRD System.

SR 3.1.4.2

Additional testing of a sample of control rods is required to verify the continued performance of the scram function during the cycle. A representative sample contains at least 10% of the control rods. The sample remains representative if no more than 20% of the control rods in the sample tested are determined to be “slow.” If more than 20% of the sample is declared to be “slow” per the criteria in Table 3.1.4-1, additional control rods are tested until this 20% criterion (e.g., 20% of the entire sample size) is satisfied, or until the total number of “slow” control rods (throughout the core, from all Surveillances) exceeds the LCO limit. For planned testing, the control rods selected for the sample should be different for each test. Data from inadvertent scrams should be used whenever possible to avoid unnecessary testing at power, even if the control rods with data were previously tested in a sample. The 120 day Frequency is based on operating experience that has shown control rod scram times do not significantly change over an operating cycle. This Frequency is also reasonable, based on the additional Surveillances done on the CRDs at more frequent intervals in accordance with LCO 3.1.3 and LCO 3.1.5, “Control Rod Scram Accumulators.”

BASES

SURVEILLANCE REQUIREMENTS (continued)

SR 3.1.4.3

When work that could affect the scram insertion time is performed on a control rod or the CRD System, testing must be done to demonstrate that each affected control rod retains adequate scram performance over the range of applicable reactor pressures from zero to the maximum permissible pressure. The scram testing must be performed once before declaring the control rod OPERABLE. The required scram time testing must demonstrate that the affected control rod is still within the limits of Table 3.1.4-1, for startup conditions.

Specific examples of work that could affect the scram times include (but are not limited to) the following: removal of any CRD for maintenance or modification; replacement of a control rod; and maintenance or modification of a scram solenoid pilot valve, scram valve, accumulator isolation valve, or check valves in the piping required for scram.

The Frequency of once prior to declaring the affected control rod OPERABLE is acceptable because of the capability of testing the control rod over a range of operating conditions and the more frequent surveillances on other aspects of control rod OPERABILITY.

SR 3.1.4.4

When work that could affect the scram insertion time is performed on a control rod or CRD System, testing must be done to demonstrate each affected control rod is still within the limits of Table 3.1.4-1 with the reactor steam dome pressure ≥ 6.55 MPaG. Where work has been performed at high reactor pressure, the requirements of SR 3.1.4.3 and SR 3.1.4.4 will be satisfied with one test. For a control rod affected by work performed while shut down, however, a zero pressure and a high pressure test may be required. This testing ensures that the control rod scram performance is acceptable for operating reactor pressure conditions prior to withdrawing the control rod for continued operation. Alternatively, a test during hydrostatic pressure testing could also satisfy both criteria.

The Frequency of once prior to exceeding 40% RTP is acceptable because of the capability of testing the control rod at the different conditions and the more frequent surveillances on other aspects of control rod OPERABILITY.

BASES

REFERENCES

1. 10 CFR 50, Appendix A, GDC 10.
2. DCD Tier 2, Section 4.6.2.
3. DCD Tier 2, Section 5.2.2.
4. DCD Tier 2, Section 15.4.1.

B 3.1 REACTIVITY CONTROL SYSTEMS

B 3.1.5 Control Rod Scram Accumulators

BASES

BACKGROUND	The control rod scram accumulators are part of the Control Rod Drive (CRD) System and are provided to ensure that the control rods scram under varying reactor conditions. The control rod scram accumulators store sufficient energy to fully insert a pair of control rods associated with a specific hydraulic control unit (HCU) at any reactor vessel pressure. The accumulator is a hydraulic cylinder with a free floating piston. The piston separates the water used to scram the control rods from the nitrogen, which provides the required energy. The scram accumulators are necessary to scram the control rods within the required insertion times of LCO 3.1.4, “Control Rod Scram Times.”
APPLICABLE SAFETY ANALYSES	The analytical methods and assumptions used in evaluating the control rod scram function are presented in References 1, 2, 3, and 4. The Design Basis Accident (DBA) and transient analyses assume that all of the control rods scram at a specified insertion rate. OPERABILITY of each individual control rod scram accumulator, along with LCO 3.1.3, “Control Rod OPERABILITY,” and LCO 3.1.4, ensures that the scram reactivity assumed in the DBA and transient analyses can be met. The existence of an inoperable accumulator may invalidate prior scram time measurements for the associated control rod. The scram function of the CRD System, and, therefore, the OPERABILITY of the accumulators, protects the MCPR Safety Limit (see Bases for LCO 3.2.2, “MINIMUM CRITICAL POWER RATIO (MCPR)”) and the 1% cladding plastic strain fuel design limit (see Bases for LCO 3.2.1, “AVERAGE PLANAR LINEAR HEAT GENERATION RATE (APLHGR),” and LCO 3.2.3, “LINEAR HEAT GENERATION RATE (LHGR)”), which ensure that no fuel damage will occur if these limits are not exceeded (see Bases for LCO 3.1.4). Also, the scram function at low reactor vessel pressure (i.e., startup conditions) provides protection against violating fuel design limits during reactivity insertion accidents (see Bases for LCO 3.1.6, “Rod Pattern Control”). Control rod scram accumulators satisfy Criterion 3 of the NRC Policy Statement.
LCO	The OPERABILITY of the control rod scram accumulators is required to ensure that adequate scram insertion capability exists when needed over the entire range of reactor pressures. The OPERABILITY of the scram accumulators is based on maintaining adequate accumulator pressure.

BASES

APPLICABILITY

In MODES 1 and 2, the scram function is required for mitigation of DBAs and transients and, therefore, the scram accumulators must be OPERABLE to support the scram function. In MODES 3 and 4, control rods are only allowed to be withdrawn since the reactor mode switch is in Shutdown and a control rod block is applied. This provides adequate requirements for control rod scram accumulator OPERABILITY under these conditions. Requirements for scram accumulators in MODE 5 are contained in LCO 3.9.5, "Control Rod OPERABILITY – Refueling."

ACTIONS

The ACTIONS table is modified by a Note indicating that a separate Condition entry is allowed for each control rod scram accumulator. This is acceptable since the Required Actions for each Condition provide appropriate compensatory action for each affected control rod. Complying with the Required Actions may allow for continued operation and subsequent affected control rods governed by subsequent Condition entry and application of associated Required Actions.

A.1

With one control rod scram accumulator inoperable, the scram function could become severely degraded because the accumulator is the primary source of scram force for the associated control rod or rod pair at all reactor pressures. In this event, the associated control rod or rod pair is declared inoperable and LCO 3.1.3 entered. This would result in requiring the affected control rod or rod pair to be fully inserted and disarmed, thereby satisfying its intended function in accordance with ACTIONS of LCO 3.1.3. The allowed Completion Time of 8 hours is considered reasonable, based on the large number of control rods available to provide the scram function. Additionally, an automatic reactor scram function is provided on sensed low pressure in the CRD charging water header (see LCO 3.3.1.1, "SSLC Sensor Instrumentation"). This anticipatory reactor trip protects against the possibility of significant pressure degradation (and thus reduced scram force) concurrently in multiple control rod scram accumulators due to a transient in the CRD hydraulic system.

BASES

ACTIONS (continued)

B.1

With two or more control rod scram accumulators inoperable, the scram function could become severely degraded because the accumulators are the primary source of scram force for the control rods at all reactor pressures. In this event, the associated control rods are declared inoperable and LCO 3.1.3 entered. This would result in requiring the affected control rods to be fully inserted and disarmed, thereby satisfying its intended function in accordance with ACTIONS of LCO 3.1.3.

The allowed Completion Time of 1 hour is considered reasonable, based on the capability to drive in the control rods by the FMCRD motors and the low probability of a DBA or transient occurring while the affected accumulators are inoperable.

C.1

The reactor mode switch must be immediately placed in the shutdown position if any Required Action and associated Completion Time cannot be met. This ensures that all insertable control rods are inserted and that the reactor is in a condition that does not require the active function (i.e., scram) of the control rods. This Required Action is modified by a Note stating that the Required Action is not applicable if all control rods associated with the inoperable scram accumulators are fully inserted, since the function of the control rods has been performed.

SURVEILLANCE REQUIREMENTS

SR 3.1.5.1

SR 3.1.5.1 requires that the accumulator pressure be checked every 7 days to ensure adequate accumulator pressure exists to provide sufficient scram force. The primary indicator of accumulator OPERABILITY is the accumulator pressure. A minimum accumulator pressure is specified, below which the capability of the accumulator to perform its intended function becomes degraded and the accumulator is considered inoperable. The minimum accumulator pressure of 12.75 MPaG is well below the expected pressure of 14.71 MPaG (Ref. 2). Declaring the accumulator inoperable when the minimum pressure is not maintained ensures that significant degradation in scram times does not occur. The 7 day Frequency has been shown to be acceptable through operating experience and takes into account indications available in the control room.

BASES

REFERENCES

1. NEDE-24011-P-A, “General Electric Standard Application Fuel,” September 1988.

2. DCD Tier 2, Section 4.6.1.

3. DCD Tier 2, Section 5.2.2.

4. DCD Tier 2, Section 15.4.1.

B 3.1 REACTIVITY CONTROL SYSTEMS

B 3.1.6 Rod Pattern Control

BASES

BACKGROUND

Control rod patterns during startup conditions are controlled by the operator and the rod worth minimizer (RWM) (LCO 3.3.5.1, “Control Rod Block Instrumentation”), so that only specified control rod sequences and relative positions are allowed over the operating range of all control rods inserted to 10% RTP. The sequences effectively limit the potential amount of reactivity addition that could occur during a control rod withdrawal, specifically the rod withdrawal error (RWE) event.

APPLICABLE SAFETY ANALYSES

The analytical methods and assumptions used in evaluating the RWE are summarized in References 1 and 2. RWE analyses assume that the reactor operator follows prescribed withdrawal sequences. These sequences define the potential initial conditions for the RWE analysis. The RWM (LCO 3.3.5.1) provides backup to operator control of the withdrawal sequences to ensure that the initial conditions of the RWE analysis are not violated.

Prevention or mitigation of positive reactivity insertion events is necessary to limit the energy deposition in the fuel, thereby preventing significant fuel damage, which could result in undue release of radioactivity (Reference 4). Since the failure consequences for UO_2 have been shown to be insignificant below fuel energy depositions of 1256 J/g, the fuel damage limit of 1172 J/g provides a margin of safety from significant core damage, which would result in release of radioactivity (Reference 3). Generic analysis of the GWSR (equivalent to the BPWS, see Reference 5) has demonstrated that the 1172 J/g fuel damage limit will not be violated during a postulated reactivity transient while following the GWSR mode of operation.

Control rod patterns analyzed in Reference 1 and 2, follow the GWSR which is the same as the banked position withdrawal sequence (BPWS) described in Reference 5. The GWSR is applicable from the condition of all control rods fully inserted to 10% RTP. For the GWSR, the control rods are required to be moved in groups, with all control rods assigned to a specific group required to be within specified banked positions. The banked positions are defined to minimize the maximum incremental control rod worths without being overly restrictive during normal plant operation. The generic BPWS analysis (Reference 5) also evaluated the effect of fully inserted, inoperable control rods not in compliance with the sequence, to allow a limited number (i.e., eight) and distribution of fully inserted, inoperable control rods.

BASES

APPLICABLE SAFETY ANALYSIS (continued)

Rod pattern control satisfies the requirements of Criterion 3 of the NRC Policy Statement.

LCO

Compliance with the prescribed control rod sequences minimizes the potential consequences of a RWE by limiting the initial conditions to those consistent with the GWSR. This LCO only applies to OPERABLE control rods. For inoperable control rods required to be inserted, separate requirements are specified in LCO 3.1.3, “Control Rod OPERABILITY,” consistent with the allowances for inoperable control rods in the GWSR.

APPLICABILITY

Compliance with GWSR is required in MODES 1 and 2, when THERMAL POWER is ≤ 10% RTP. When THERMAL POWER is > 10% RTP, there is no credible control rod configuration that results in a control rod worth that could exceed the 1172 J/g fuel damage limit during a RWE. In MODES 3, 4, and 5, since only a total of one control rod or control rod pair can be withdrawn from core cells containing fuel assemblies, adequate SDM ensures that the reactor will remain subcritical.

ACTIONS

A.1 and A.2

With one or more OPERABLE control rods not in compliance with the prescribed control rod sequence, action may be taken to either correct the control rod pattern or declare the associated control rods inoperable within 8 hours. Noncompliance with the prescribed sequence may be the result of failed synchros, drifting from a control rod drive purge water transient, leaking scram valves, or a power reduction to ≤ 10% RTP before establishing the correct control rod pattern. The number of OPERABLE control rods not in compliance with the prescribed sequence is limited to eight to prevent the operator from attempting to correct a control rod pattern that significantly deviates from the prescribed sequence. When the control rod pattern is not in compliance with the prescribed sequence, all control rod movement should be stopped except for moves needed to correct the control rod pattern, or scram if warranted.

Required Action A.1 is modified by a Note, which allows control rods to be bypassed in RAPI to allow the affected control rods to be returned to their correct position. This ensures that the control rods will be moved to the correct position. A control rod not in compliance with the prescribed sequence is not considered inoperable except as required by Required Action A.2. OPERABILITY of control rods is determined by compliance

BASES

ACTIONS (continued)

A.1 and A.2 (continued)

with LCO 3.1.3; LCO 3.1.4, “Control Rod Scram Times”; and LCO 3.1.5, “Control Rod Scram Accumulators.” The allowed Completion Time of 8 hours is reasonable, considering the restrictions on the number of allowed out of sequence control rods and the low probability of a RWE occurring during the time the control rods are out of sequence.

B.1 and B.2

If nine or more OPERABLE control rods are out of sequence, the control rod pattern significantly deviates from the prescribed sequence. Control rod withdrawal should be suspended immediately to prevent the potential for further deviation from the prescribed sequence. Control rod insertion to correct control rods withdrawn beyond their allowed position is allowed since, in general, insertion of control rods has less impact on control rod worth than withdrawals have. Required Action B.1 is modified by a Note that allows the affected control rods to be bypassed in RAPI in accordance with SR 3.3.5.1.7 to allow insertion only.

With nine or more OPERABLE control rods not in compliance with GWSR, the reactor mode switch must be placed in the shutdown position within 1 hour. With the reactor modeswitch in shutdown, the reactor is shut down, and therefore does not meet the applicability requirements of this LCO. The allowed Completion Time of 1 hour is reasonable to allow insertion of control rods to restore compliance, and is appropriate relative to the low probability of a RWE occurring with the control rods out of sequence.

SURVEILLANCE REQUIREMENTS

SR 3.1.6.1

The control rod pattern is verified to be in compliance with the GWSR at a 24 hour Frequency, ensuring the assumptions of the RWE analyses are met. The 24 hour Frequency of this Surveillance was developed considering that the primary check of the control rod pattern compliance with the GWSR is performed by the RWM (LCO 3.3.5.1). The RWM provides control rod blocks to enforce the required control rod sequence and is required to be OPERABLE when operating at ≤ 10% RTP.

BASES

REFERENCES

1. NEDE-24011-P-A-9-US, “General Electric Standard Application for Reactor Fuel – Supplement for United States,” September 1988.

2. DCD Tier 2, Section 15.4.1.

3. NUREG-0800, “Standard Review Plan,” Section 15.4.1, “Uncontrolled Control Rod Assembly Withdrawal from a Subcritical or Low Rod Power Startup Condition,” Revision 2, July 1981.

4. 10 CFR 100.11, “Determination of Exclusion Area Low Population Zone and Population Center Distance.”

5. NEDO-21231, “Banked Position Withdrawal Sequence,” January 1977.

B 3.1 REACTIVITY CONTROL SYSTEMS

B 3.1.7 Standby Liquid Control (SLC) System

BASES

BACKGROUND	The SLC System is designed to provide the capability of bringing the reactor, at any time in a fuel cycle, from full power and minimum control rod inventory (which is at the peak of the xenon transient) to a subcritical condition with the reactor in the most reactive xenon free state without taking credit for control rod movement. The SLC System satisfies the requirements of 10 CFR 50.62 (Ref. 1) on anticipated transient without scram (ATWS). The SLC System consists of a boron solution storage tank, two positive displacement pumps, two motor operated injection valves, which are provided in parallel for redundancy, and associated piping and valves used to transfer borated water from the storage tank to the reactor pressure vessel (RPV). The borated solution is discharged through the "B" high pressure core flooder (HPCF) subsystem sparger.
APPLICABLE SAFETY ANALYSES	The SLC System is automatically initiated. The SLC System is used in the event that not enough control rods can be inserted to accomplish shutdown and cooldown in the normal manner. The SLC System injects borated water into the reactor core to compensate for all of the various reactivity effects that could occur during plant operation. To meet this objective, it is necessary to inject a quantity of boron that produces a concentration of 850 ppm of natural boron in the reactor core at 20°C with the reactor at normal water level.. Considering uncertainties of mixing and the dilution by RHR water, the borated water concentration will be 1070 ppm (Ref. 2) or higher for a mass of water equal to the sum of the mass of water in the RPV at normal water level and the RHR shutdown cooling piping. The temperature versus concentration limits in Figure 3.1.7-1 are calculated such that the required concentration is achieved. This quantity of borated solution is the amount that is above the pump suction shutoff level in the boron solution storage tank. No credit is taken for the portion of the tank volume that cannot be injected. The SLC System satisfies the requirements of the NRC Policy Statement because operating experience and probabilistic risk assessment have generally shown it to be important to public health and safety.
LCO	The OPERABILITY of the SLC System provides backup capability for reactivity control, independent of normal reactivity control provisions provided by the control rods. The OPERABILITY of the SLC System is

BASES

LCO (continued)

based on the conditions of the borated solution in the storage tank and the availability of a flow path to the RPV, including the OPERABILITY of the pumps and valves. Two SLC subsystems are required to be OPERABLE, each containing an OPERABLE pump, a motor operated injection valve, and associated piping, valves, and instruments and controls to ensure an OPERABLE flow path.

APPLICABILITY

In MODES 1 and 2, shutdown capability is required. In MODES 3 and 4, control rods are not able to be withdrawn since the reactor mode switch is in Shutdown and a control rod block is applied. This provides adequate controls to ensure the reactor remains subcritical. In MODE 5, only a single control rod or control rod pair can be withdrawn from a core cell containing fuel assemblies. Demonstration of adequate SDM (LCO 3.1.1, “SHUTDOWN MARGIN (SDM)”) ensures that the reactor will not become critical. Therefore, the SLC System is not required to be OPERABLE during these conditions, when only a single control rod or control rod pair can be withdrawn.

ACTIONS

A.1

If the boron concentration is less than the required limits given in Figure 3.1.7-1, the concentration must be restored to within limits in 72 hours. For ATWS prevention/mitigation the ABWR features: an automatic rod insert (ARI) and an electrical insertion of FMCRDs, both of which utilize sensors and logic that are diverse and independent of the reactor protection system; an ATWS recirculation pump trip (RPT); and, automatic initiation of SLCS under ATWS conditions (Ref. 3). These features provide the ABWR an ATWS prevention and mitigation capability well beyond previous BWRs. Because of the low probability of an ATWS event, the ATWS prevention/mitigation features and the fact that the SLC System capability still exists for vessel injection under these conditions, the allowed Completion Time of 72 hours is acceptable and provides adequate time to restore concentration to within limits. The second Completion Time for Required Action A.1 establishes a limit on the maximum time allowed for any combination of concentration out of limits or inoperable SLC subsystems during any single contiguous occurrence of failing to meet the LCO. If Condition A is entered while, for instance, an SLC subsystem is inoperable and that subsystem is subsequently returned to OPERABLE, the LCO may already have been not met for up to 7 days. This situation could lead to a total duration of 10 days (7 days in Condition B, followed by 3 days in Condition A), since initial failure of

BASES

ACTIONS (continued)

A.1 (continued)

the LCO, to restore the SLC System. Then an SLC subsystem could be found inoperable again, and concentration could be restored to within limits. This could continue indefinitely.

This Completion Time allows for an exception to the normal “time zero” for beginning the allowed outage time “clock,” resulting in establishing the “time zero” at the time the LCO was initially not met instead of at the time Condition A was entered. The 10 day Completion Time is an acceptable limitation on this potential to fail to meet the LCO indefinitely.

B.1

If one SLC System subsystem is inoperable, the inoperable subsystem must be restored to OPERABLE status within 7 days. In this condition, the remaining OPERABLE subsystem is adequate to perform the shutdown function. However, the overall reliability is reduced because a single failure in the remaining OPERABLE subsystem could result in reduced SLC System shutdown capability. The 7 day Completion Time is based on the availability of an OPERABLE subsystem capable of performing the intended SLC System function and the low probability of an ATWS event. The second Completion Time for Required Action B.1 establishes a limit on the maximum time allowed for any combination of concentration out of limits or inoperable SLC subsystems during any single contiguous occurrence of failing to meet the LCO. If Condition B is entered while, for instance, concentration is out of limits, and is subsequently returned to within limits, the LCO may already have been not met for up to 7 days. This situation could lead to a total duration of 10 days (3 days in Condition A, followed by 7 days in Condition B), since initial failure of the LCO, to restore the SLC System. Then concentration could be found out of limits again, and the SLC subsystem could be restored to OPERABLE. This could continue indefinitely.

This Completion Time allows for an exception to the normal “time zero” for beginning the allowed outage time “clock,” resulting in establishing the “time zero” at the time the LCO was initially not met instead of at the time Condition B was entered. The 10 day Completion Time is an acceptable limitation on this potential to fail to meet the LCO indefinitely.

BASES

ACTIONS (continued)

C.1

If both SLC subsystems are inoperable, at least one subsystem must be restored to OPERABLE status within 8 hours. The allowed Completion Time of 8 hours is considered acceptable, given the low probability of ACTIONS an ATWS event.

D.1

If any Required Action and associated Completion Time is not met, the plant must be brought to a MODE in which the LCO does not apply. To achieve this status, the plant must be brought to MODE 3 within 12 hours. The allowed Completion Time of 12 hours is reasonable, based on operating experience, to reach MODE 3 from full power conditions in an orderly manner and without challenging plant systems.

SURVEILLANCE REQUIREMENTS

SR 3.1.7.1 and SR 3.1.7.2

SR 3.1.7.1 and SR 3.1.7.2 are 24 hour Surveillances, verifying certain characteristics of the SLC System (e.g., the volume and temperature of the borated solution in the storage tank), thereby ensuring the SLC System OPERABILITY without disturbing normal plant operation. These Surveillances ensure that the proper borated solution and temperature are maintained. Maintaining a minimum specified borated solution temperature is important in ensuring that the boron remains in solution and does not precipitate out in the storage tank. The 24 hour Frequency of these SRs is based on operating experience that has shown there are relatively slow variations in the measured parameters of volume and temperature.

SR 3.1.7.3

This Surveillance requires an examination of the sodium pentaborate solution by using chemical analysis to ensure the proper concentration of boron exists in the storage tank. SR 3.1.7.3 must be performed anytime boron or water is added to the storage tank solution to establish that the boron solution concentration is within the specified limits. This Surveillance must be performed anytime the temperature is restored to within the limits of Figure 3.1.7-1, to ensure no significant boron precipitation occurred. The 31 day Frequency of this Surveillance is appropriate because of the relatively slow variation of boron concentration between surveillances.

BASES

SURVEILLANCE REQUIREMENTS (continued)

SR 3.1.7.4

SR 3.1.7.4 verifies each valve in the system is in its correct position. Verifying the correct alignment for manual, power operated, and automatic valves in the SLC System flow path ensures that the proper flow paths will exist for system operation. This Surveillance does not apply to valves that are locked, sealed, or otherwise secured in position, since they were verified to be in the correct position prior to locking, sealing, or securing. This verification of valve alignment does not apply to valves that cannot be inadvertently misaligned, such as check valves. This SR does not require any testing or valve manipulation; rather, it involves verification that those valves capable of being mispositioned are in the correct positions. The 31 day Frequency is based on engineering judgment and is consistent with the procedural controls governing valve operation that ensure correct valve positions.

SR 3.1.7.5

Demonstrating each SLC System pump develops a flow rate $\geq$ 11.4 m^3/h at a discharge pressure $\geq$ 8.43 MPaG ensures that pump performance has not degraded during the fuel cycle. This minimum pump flow rate requirement ensures that, when combined with the sodium pentaborate solution concentration requirements, the rate of negative reactivity insertion from the SLC System will adequately compensate for the positive reactivity effects encountered during power reduction, cooldown of the moderator, and xenon decay. This test confirms one point on the pump design curve, and is indicative of overall performance. Such inservice inspections confirm component OPERABILITY, trend performance, and detect incipient failures by indicating abnormal performance. The Frequency of this Surveillance is 92 days.

SR 3.1.7.6

Cycling each motor operated valve (MOV) through one complete cycle of full travel demonstrates that the valves are mechanically OPERABLE, that the motor is electrically OPERABLE and that the MOV will function when required. The Frequency of this Surveillance is 92 days.

BASES

SURVEILLANCE REQUIREMENTS (continued)

SR 3.1.7.7 and SR 3.1.7.8

These Surveillances, along with SR 3.1.7.6, ensure that there is a functioning flow path from the boron solution storage tank to the RPV. In SR 3.1.7.7, the pump and injection valve tested should be alternated such that both complete flow paths are tested every 36 months, at alternating 18 month intervals. The Surveillance may be performed in separate steps to prevent injecting boron into the RPV. An acceptable method for verifying flow from the pump to the RPV is to pump demineralized water from a test tank through one SLC subsystem and into the RPV. In SR 3.1.7.8, both SLCS pumps are tested for simultaneous operation to demonstrate operability of both SLCS pumps for ATWS mitigation. The 18 month Frequencies are based on the need to perform these Surveillances under the conditions that apply during a plant outage and the potential for an unplanned transient if the Surveillance(s) were performed with the reactor at power. Operating experience has shown these components usually pass the Surveillance test when performed at the 18 month Frequency; therefore, the Frequency was concluded to be acceptable from a reliability standpoint.

REFERENCES

1. 10 CFR 50.62.
2. DCD Tier 2, Section 9.3.5.3.
3. DCD Tier 2, Section 15.8.2.

B 3.2 POWER DISTRIBUTION LIMITS

B 3.2.1 AVERAGE PLANAR LINEAR HEAT GENERATION RATE (APLHGR)

BASES

BACKGROUND

The APLHGR is a measure of the average LHGR of all the fuel rods in a fuel assembly at any axial location. Limits on the APLHGR are specified to ensure that the fuel design limits identified in Reference 1 are not exceeded during anticipated operational occurrences (AOOs) and that the peak cladding temperature (PCT) during the postulated design basis loss of coolant accident (LOCA) does not exceed the limits specified in 10 CFR 50.46.

APPLICABLE SAFETY ANALYSES

The analytical methods and assumptions used in evaluating the fuel design limits are presented in the DCD Tier 2, Chapter 4, and in Reference 1. The analytical methods and assumptions used in evaluating Design Basis Accidents (DBAs), anticipated operational transients, and normal operations that determine APLHGR limits are presented in DCD Tier 2, Chapters 4, 6, and 15, and in Reference 1.

Fuel design evaluations are performed to demonstrate that the 1% limit on the fuel cladding plastic strain and other fuel design limits described in Reference 1 are not exceeded during AOOs for operation with LHGR up to the operating limit LHGR. APLHGR limits are equivalent to the LHGR limit for each fuel rod divided by the local peaking factor of the fuel assembly. APLHGR limits are developed as a function of exposure and the various operating core flow and power states to ensure adherence to fuel design limits during the limiting AOOs. Flow dependent APLHGR limits are determined using the three dimensional BWR simulator code (Ref. 2) to analyze slow flow runout transients. The flow dependent multiplier, $MAPFAC_f$, is dependent on the maximum core flow runout capability. The maximum runout flow is dependent on the existing setting of the core flow limiter in the Recirculation Flow Control System.

Based on analyses of limiting plant transients (other than core flow increases) over a range of power and flow conditions, power dependent multipliers, $MAPFAC_p$, are also generated. Due to the sensitivity of the transient response to initial core flow levels at power levels below those at which turbine stop valve closure and turbine control valve fast closure scram signals are bypassed, both high and low core flow $MAPFAC_p$ limits are provided for operation at power levels between 25% RTP and the previously mentioned bypass power level. The exposure dependent APLHGR limits are reduced by $MAPFAC_p$ and $MAPFAC_f$ at various operating conditions to ensure that all fuel design criteria are met for normal operation and AOOs. A complete discussion of the analysis code is provided in Reference 3.

BASES

APPLICABLE SAFETY ANALYSES (continued)

LOCA analyses are then performed to ensure that the above determined APLHGR limits are adequate to meet the PCT and maximum oxidation limits of 10 CFR 50.46. The analysis is performed using calculational models that are consistent with the requirements of 10 CFR 50, Appendix K. A complete discussion of the analysis code is provided in Reference 1. The PCT following a postulated LOCA is a function of the average heat generation rate of all the rods of a fuel assembly at any axial location and is not strongly influenced by the rod to rod power distribution within an assembly. The APLHGR limits specified are equivalent to the LHGR of the highest powered fuel rod assumed in the LOCA analysis divided by its local peaking factor. A conservative multiplier is applied to the LHGR assumed in the LOCA analysis to account for the uncertainty associated with the measurement of the APLHGR.

The APLHGR satisfies Criterion 2 of the NRC Policy Statement.

LCO

The APLHGR limits specified in the COLR are the result of fuel design, DBA, and transient analyses. The limit is determined by multiplying the smaller of the $MAPFAC_f$ and $MAPFAC_p$ factors times the exposure dependent APLHGR limits.

APPLICABILITY

The APLHGR limits are primarily derived from fuel design evaluations and LOCA and transient analyses that are assumed to occur at high power levels. Design calculations (Ref. 3) and operating experience have shown that as power is reduced, the margin to the required APLHGR limits increases. This trend continues down to the power range of 5% to 15% RTP when entry into MODE 2 occurs. When in MODE 2, the Startup Range Neutron Monitor (SRNM) scram function provides prompt scram initiation during any significant transient, thereby effectively removing any APLHGR limit compliance concern in MODE 2. Therefore, at THERMAL POWER levels $\leq$ 25% RTP, the reactor operates with substantial margin to the APLHGR limits; thus, this LCO is not required.

BASES

ACTIONS

A.1

If any APLHGR exceeds the required limits, an assumption regarding an initial condition of the DBA and transient analyses may not be met. Therefore, prompt action is taken to restore the APLHGR(s) to within the required limits such that the plant will be operating within analyzed conditions and within the design limits of the fuel rods. The 2 hour Completion Time is sufficient to restore the APLHGR(s) to within its limits and is acceptable based on the low probability of a transient or DBA occurring simultaneously with the APLHGR out of specification.

B.1

If the APLHGR cannot be restored to within its required limits within the associated Completion Time, the plant must be brought to a MODE or other specified condition in which the LCO does not apply. To achieve this status, THERMAL POWER must be reduced to < 25% RTP within 4 hours. The allowed Completion Time is reasonable, based on operating experience, to reduce THERMAL POWER to < 25% RTP in an orderly manner and without challenging plant systems.

SURVEILLANCE REQUIREMENTS

SR 3.2.1.1

APLHGRs are required to be initially calculated within 12 hours after THERMAL POWER is ≥ 25% RTP and then every 24 hours thereafter. They are compared to the specified limits in the COLR to ensure that the reactor is operating within the assumptions of the safety analysis. The 24 hour Frequency is based on both engineering judgment and recognition of the slowness of changes in power distribution under normal conditions. The 12 hour allowance after THERMAL POWER ≥ 25% RTP is achieved is acceptable given the large inherent margin to operating limits at low power levels.

REFERENCES

1. NEDO-24011-P-A, “General Electric Standard Application for Reactor Fuel,” September 1988.

2. NEDO-301300-A, “Steady State Nuclear Methods,” May 1985.

3. NEDO 24154, “Qualification of the One-Dimensional Core Transient Model for Boiling Water Reactors,” October 1978.

B 3.2 POWER DISTRIBUTION LIMITS

B 3.2.2 MINIMUM CRITICAL POWER RATIO (MCPR)

BASES

BACKGROUND

The MCPR is the ratio of the fuel assembly power that would result in the onset of boiling transition to the actual fuel assembly power. The MCPR Safety Limit (SL) is set such that 99.9% of the fuel rods avoid boiling transition if the limit is not violated (refer to the Bases for SL 2.1.2). The operating limit MCPR is established to ensure that no fuel damage results during anticipated operational occurrences (AOOs). Although fuel damage does not necessarily occur if a fuel rod actually experiences boiling transition (Ref. 1), the critical power at which boiling transition is calculated to occur has been adopted as a fuel design criterion.

The onset of transition boiling is a phenomenon that is readily detected during the testing of various fuel bundle designs. Based on these experimental data, correlations have been developed to predict critical bundle power (i.e., the bundle power level at the onset of transition boiling) for a given set of plant parameters (e.g., reactor vessel pressure, flow, and subcooling). Because plant operating conditions and bundle power levels are monitored and determined relatively easily, monitoring the MCPR is a convenient way of ensuring that fuel failures due to inadequate cooling do not occur.

APPLICABLE SAFETY ANALYSES

The analytical methods and assumptions used in evaluating the AOOs to establish the operating limit MCPR are presented in the DCD Tier 2, Chapters 4, 6, and 15, and Reference 2. To ensure that the MCPR SL is not exceeded during any transient event that occurs with moderate frequency, limiting transients have been analyzed to determine the largest reduction in critical power ratio (CPR). The types of transients evaluated are loss of feedwater flow, increase in pressure and power, positive reactivity insertion, and coolant temperature decrease. The limiting transient yields the largest change in CPR (ΔCPR). When the largest ΔCPR is added to the MCPR SL, the required operating limit MCPR is obtained.

The MCPR operating limits derived from the transient analysis are dependent on the operating core flow and power state ($MCPR_f$ and $MCPR_p$, respectively) to ensure adherence to fuel design limits during the worst transient that occurs with moderate frequency. Flow dependent MCPR limits are determined by steady state thermal hydraulic methods with key physics response inputs benchmarked using the three dimensional BWR simulator code (Reference 3) to analyze slow flow runout transients. The operating limit is dependent on the maximum core flow limiter setting in the Recirculation Flow Control System.

BASES

APPLICABLE SAFETY ANALYSES (continued)

Power dependent MCPR limits ($MCPR_p$) are determined by the one dimensional transient code (Reference 4) for anticipated transients that are significantly affected by power. Due to the sensitivity of the transient response to initial core flow levels at power levels below those at which the turbine stop valve closure and turbine control valve fast closure scram trips are bypassed, high and low flow $MCPR_p$ operating limits are provided for operating between 25% RTP and the previously mentioned bypass power level.

The MCPR satisfies Criterion 2 of the NRC Policy Statement.

LCO

The MCPR operating limits specified in the COLR are the result of the Design Basis Accident (DBA) and transient analysis. The MCPR operating limits are determined by the larger of the $MCPR_f$ and $MCPR_p$ limits.

APPLICABILITY

The MCPR operating limits are primarily derived from transient analyses that are assumed to occur at high power levels. Below 25% RTP, the reactor is operating at a minimum reactor internal pump speed and the moderator void ratio is small. Surveillance of thermal limits below 25% RTP is unnecessary due to the large inherent margin that ensures that the MCPR SL is not exceeded even if a limiting transient occurs.

Statistical analyses documented in Reference 5 indicate that the nominal value of the initial MCPR expected at 25% RTP is > 3.5. Studies of the variation of limiting transient behavior have been performed over the range of power and flow conditions. These studies encompass the range of key actual plant parameter values important to typically limiting transients. The results of these studies demonstrate that a margin is expected between performance and the MCPR requirements, and that margins increase as power is reduced to 25% RTP. This trend is expected to continue to the 5% to 15% power range when entry into MODE 2 occurs. When in MODE 2, the Startup Range Neutron Monitor (SRNM) provides rapid scram initiation for any significant power increase transient, which effectively eliminates any MCPR compliance concern. Therefore, at THERMAL POWER levels < 25% RTP, the reactor is operating with substantial margin to the MCPR limits and this LCO is not required.

BASES

ACTIONS

A.1

If any MCPR is outside the required limits, an assumption regarding an initial condition of the design basis transient analyses may not be met. Therefore, prompt action should be taken to restore the MCPR(s) to within the required limits such that the plant remains operating within analyzed conditions. The 2 hour Completion Time is normally sufficient to restore the MCPR(s) to within its limits and is acceptable based on the low probability of a transient or DBA occurring simultaneously with the MCPR out of specification.

B.1

If the MCPR cannot be restored to within the required limits within the associated Completion Time, the plant must be brought to a MODE or other specified condition in which the LCO does not apply. To achieve this status, THERMAL POWER must be reduced to < 25% RTP within 4 hours. The allowed Completion Time is reasonable, based on operating experience, to reduce THERMAL POWER to < 25% RTP in an orderly manner and without challenging plant systems.

SURVEILLANCE REQUIREMENTS

SR 3.2.2.1

The MCPR is required to be initially calculated within 12 hours after THERMAL POWER is ≥ 25% RTP and then every 24 hours thereafter. It is compared to the specified limits in the COLR to ensure that the reactor is operating within the assumptions of the safety analysis. The 24 hour Frequency is based on both engineering judgment and recognition of the slowness of changes in power distribution during normal operation. The 12 hour allowance after THERMAL POWER reaches ≥ 25% RTP is acceptable given the large inherent margin to operating limits at low power levels.

BASES

REFERENCES

1. NUREG-0562, June 1979.

2. NEDO-24011-P-A, “General Electric Standard Application for Reactor Fuel,” September 1988.

3. NEDO-30131-A, “Steady State Nuclear Methods,” May 1985.

4. NEDO-24154, “Qualification of the One-Dimensional Core Transient Model for Boiling Water Reactors,” October 1978.

5. “BWR/6 Generic Rod Withdrawal Error Analysis,” Appendix 15B, General Electric Standard Safety Analysis Report, GESSAR.

B 3.2 POWER DISTRIBUTION LIMITS

B 3.2.3 LINEAR HEAT GENERATION RATE (LHGR) (Non-GE Fuel)

BASES

Not Used.

B 3.3 INSTRUMENTATION

B 3.3.1.1 Safety System Logic and Control (SSLC) Sensor Instrumentation

BASES

BACKGROUND

The SSLC initiates protective actions when one or more monitored parameters exceed their specified limit to preserve the integrity of the fuel cladding and the Reactor Coolant System (RCS) and minimize the energy that must be removed from the RCS following accidents or transients.

The protection and monitoring functions of the SSLC have been designed to ensure safe operation of the reactor. This is achieved by specifying Limiting Safety System Settings (LSSS) in terms of parameters monitored by the SSLC, as well as Limiting Conditions of Operation (LCOs) on reactor system parameters and equipment performance. For the purpose of this specification the LSSS are defined as the Allowable Values, which, in conjunction with the LCOs, establish the threshold for protective system action to prevent exceeding acceptable limits, including Safety Limits (SLs), during Design Basis Accidents (DBAs).

The SSLC is comprised of four independent logic divisions (Div. I, II, III, IV). Each logic division provides protective action initiation signals for safety system prime movers associated with their division. Each division is a collection of SENSOR CHANNELS which provide data to the LOGIC CHANNELS in the division. The LOGIC CHANNELS provide initiation signals to the appropriate OUTPUT CHANNELS. The OUTPUT CHANNELS cause actuation of the equipment that implements protective actions. The Functions listed in Table 3.3.1.1-1 have at least one SENSOR CHANNEL in one or more divisions.

SSLC is implemented through the Reactor Trip and Isolation System (RTIS), which supports the reactor protection and main steam isolation functions, and the ESF Logic and Control System (ELCS), which supports the accident mitigation functions. Also included in the SSLC are the Neutron Monitoring System (NMS), the Containment Monitoring System (CMS), and the safety-related portions of the radiation monitoring systems. Each SSLC division has four main components:

- Digital Trip Function (DTF). The digital trip function acquires data for most process parameters to be monitored in its division and generates a protective action initiation signal within its division if the monitored parameter is outside of specified limits. The protective action initiation signal is also transmitted to other divisions associated with the monitored parameter. Most of the parameters in the ELCS are transmitted to the DTF via the Essential Communication Function (ECF) in its division while some are received from sub-systems or devices associated with the same

BASES

BACKGROUND (continued)

division as the DTF. There are multiple DTFs in each division. Some DTFs serve the Reactor Protection System and MSIV closure functions while the others serve the ESF and non-MSIV isolation functions. For the discussions in this LCO the DTFs that implement the RPS and MSIV closure functions are referred to as the "RPS/MSIV DTFs" and the ones that implement the ESF and non-MSIV closure functions are referred to as the "ELCS DTFs".

- Trip Logic Function (TLF). The TLF uses the parameter trip information from the RPS/MSIV DTFs in all four divisions to determine if a protective action is required. There is a TLF in each division. The combinatorial logic used to create protective system actuation commands is performed in the TLF. Some data used for initiating protective actions are connected directly to the TLFs.

- Digital Logic Controller (DLC) performing the Safety System Logic Function (SLF) of the ELCS. The DLC of the ELCS is implemented in microprocessor based devices that use the parameter trip information from the ELCS DTFs in all four divisions to determine if a protective action is required. The combinatorial logic used to create protective system actuation commands is performed in the DLC. ESF logic processing is implemented with either a single channel within each division, redundant channels within each division with two microprocessor channels (i.e., both channels must be initiated for complete actuation of the function), or dual channels within each division with a two-out-of-two vote at the outputs of the DLC, and may be bypassable.

- Output Logic Unit (OLU). The OLUs receive protective action initiation commands from the TLFs in the same division. The OLU contains hardware logic to provide trip, seal-in, reset, and manual test functions for the RPS and MSIV closure functions.

- Bypass Interlock Function. The bypass interlock function enforces restrictions on bypassing multiple divisions of related Functions.

DTF processing logic compares digitized analog signal data against numeric trip setpoints to determine if a protective action is required.

BASES

BACKGROUND (continued)

Typically, a process sensor in each of the four divisions provides a signal to the DTFs in its division. Exceptions are:

- Some parameters are received by the DTF as discrete (i.e. 2 state) actuation data signals directly from other systems or devices (e.g. MSIV closure signals, PRRM system).

- Some parameters are received by the ELCS DTF through the ECF from remote digital logic controllers (RDLCs).

- Some parameters are received directly by the ESF DLC or the RTIS TLF as discrete (i.e. 2 state) actuation data signals directly from other systems (e.g. NMS signals, CUW, ECCS, manual initiation signals). These parameters are covered by other LCOs, except the NMS parameters are covered by this LCO.

- Some parameters are received by the ESF DLC as analog signals directly from process sensors (e.g. RHR pump discharge pressure). These parameters are covered by other LCOs.

- Parameters that are used for control of equipment associated with a specific division may use one or two sensors (e.g. ECCS pump pressure interlocks, manual initiation of an ECCS pump). These parameters are covered by other LCOs.

- Some parameters may use multiple sensors within a division to provide additional redundancy (e.g. Level 1) or where a distributed parameter is monitored (e.g. Suppression pool temperature).

- Some parameters (e.g. SLCS and FWRB initiation on Reactor Vessel Water Level-Low, Level 2) are connected to signal processing electronics that are separate from the normal SSLC processor. A separate I/O unit is provided in each division for these parameters.

The SSLC hardware and logic is arranged so the system uses two-out-of four coincident initiation logic (i.e. 2 signals for the same parameter must exceed the setpoint before a protective action initiation command is issued). The interdivisional initiation data used in the ESF DLC / RTIS TLF logic is transmitted between divisions by isolated fiber optic links from the DTFs or other systems in the redundant other divisions.

There are two basic segments that are used to initiate protective actions. The SENSOR CHANNEL segment consists of the instrumentation portion which encompasses the sensors, sensor data conversion, sensor data transmission path and the setpoint comparison.

BASES

BACKGROUND (continued)

Capability is provided to manually trip individual SENSOR CHANNELS. Interlocks are provided to prevent placing more than one SENSOR CHANNEL for a given Function in trip at the same time.

The LOGIC CHANNEL segment consists of the functions responsible for implementing the initiation logic, generating initiation signals when needed, and various support functions. The LOGIC CHANNELS in each division send data to the OUTPUT CHANNELS.

The SENSOR CHANNELS and LOGIC CHANNELS are replicated in four independent and separated divisions of equipment. The sensors are not considered to be part of the SSLC. However, the sensors and the analog to digital conversion function are addressed by this LCO since these devices can effect the results of surveillances required by this LCO.

Various bypasses are provided to permit on-line maintenance and calibration. The “division of sensors bypass” disables the DTF inputs to the associated ESF DLC and RTIS TLF in one division. The direct trip inputs to the ESF DLC and RTIS TLF are not bypassed. Interlocks are provided so only one division of sensors at a time can be placed in bypass. When a division of sensors is bypassed the sensor trip logic in all ESF DLCs and RTIS TLFs becomes 2 out of 3 and all of them are capable of providing signals to equipment used to provide protective action. Other bypasses are used to manually or automatically disable selected Functions when they are not required.

The RPS/MSIV OUTPUT CHANNEL may be bypassed with the TLF logic output bypass which disables the trip input to the Output Logic Unit (OLU) in one logic division. Interlocks are provided so only one division at a time can be placed in TLF logic output bypass. When a logic division is bypassed the final actuation logic becomes 2/3 for the scram and MSIV closure actions. The sensor trip logic within the unbypassed logic divisions remains as 2/4.

The Main Steamline Isolation special bypass is similar to the division of sensors bypass except it affects only the Main Steam Isolation Valve closure scram. This bypass is provided to permit operation with one steam line isolated.

BASES

BACKGROUND (continued)

Some ESF logic processing may be bypassed for a redundant channel, which disables the trip output to the OLU altering the logic format from 2/2 to 1/1 for that ESF action. The equipment involved with each of these systems is described in the Bases for LCO 3.3.1.4, "ESF Actuation Instrumentation."

The NMS contains a separate bypass which causes one of the NMS APRM sensor divisions to be bypassed in the NMS logic. The trip logic for NMS APRM sensor inputs then becomes 2/3 in all four SSLC divisions. Interlocks are provided so only one NMS APRM division at a time can be placed in bypass.

Similarly, the NMS contains a bypass for SRNM channels. Refer to the bases of LCO 3.3.2.1 for details of the bypass implementation.

Since the logic is 2/3 even with any one division of sensors in bypass and any one TLF logic output bypass, the SSLC still meets the single failure criteria for failure to trip and spurious trip prevention under this condition.

Each processing division has test and trip switches located in the divisional control room panels. These test switches are used for testing the SSLC and can also provide manual protective action initiation.

The SSLC includes a variety of self-diagnostic and monitoring features.

Once a protective action is initiated, it seals in and must be manually reset. The manual resets are inoperative if the SSLC initiation signals are still present.

Reactor Protection System (RPS)

The RPS portion of the SSLC initiates a reactor scram when one or more monitored parameters exceed their specified limit to preserve the integrity of the fuel cladding and the Reactor Coolant System (RCS) and minimize the energy that must be absorbed following a loss of coolant accident (LOCA). This can be accomplished either automatically or manually.

BASES

BACKGROUND (continued)

The RPS, as shown in Reference 3, uses four independent divisions each containing sensors, DTFs, TLFs, OLUs, load drivers, and switches that are necessary to cause initiation of a reactor scram. Functional diversity is provided by monitoring a wide range of dependent and independent parameters. The input parameters to the SSLC scram logic are from devices that monitor:

- reactor vessel water level
- reactor vessel steam dome pressure
- SRNM Neutron Flux & neutron flux period
- APRM neutron flux
- APRM simulated thermal power
- oscillation power range monitor
- rapid core flow decrease
- main steam line isolation valve - closure
- turbine control valve fast closure (trip oil pressure low)
- turbine stop valve - closure
- suppression pool temperature
- drywell pressure
- CRD water header charging pressure

Two normally energized, solenoid operated, scram pilot valves are located on the Hydraulic Control Unit (HCU) for each Control Rod Drive (CRD) pair. The scram pilot valves control the air supply to the scram inlet valve for the associated CRD pair. When either scram pilot valve solenoid is energized, air pressure holds the scram valves closed. Therefore, both scram pilot valve solenoids must be de-energized to cause a control rod pair to scram. The scram valve controls the supply path for the CRD water during a scram.

Each of the pilot valve solenoids is controlled by a series/parallel arrangement of four load drivers (one set of load drivers is in division II, a second set is in division III) with the outputs of the four logic divisions connected to the load drivers such that a trip signal from any two of the logic divisions results in de-energizing both solenoids, air bleeding off, scram valves opening, and control rod scram.

BASES

BACKGROUND (continued)

The backup scram valves, which energize on a scram signal to depressurize the scram air header, are also controlled by the RPS portion of the SSLC.

Two hardwired manual scram switches which completely bypass the RTIS and load drivers are provided. The switches on the main control console remove power from the scram pilot valve solenoids and also energize the air header dump valve solenoids (backup scram). When the reactor mode switch is in the SHUTDOWN position, manual scram is also initiated. The manual scram functions are covered in LCO 3.3.1.2.

Emergency Core Cooling Systems (ECCS)

The Emergency Core Cooling Systems (ECCS) encompass the High Pressure Core Flooder (HPCF) system, Automatic Depressurization System (ADS), Reactor Core Isolation Cooling (RCIC) system, and the Low Pressure Flooder (LPFL) mode of the Residual Heat Removal (RHR) system. The purpose of the ECCS portion of the SSLC instrumentation is to initiate appropriate responses from the systems and the standby Diesel-Generators (DGs) to ensure that fuel is adequately cooled in the event of a design basis accident or transient. The equipment involved with each of these systems is described in the Bases for LCO 3.5.1, “ECCS - Operating.”

To provide redundant and diverse protection against anticipated operational occurrences (AOOs) and Design Basis Accidents (DBAs), a wide range of dependent and independent parameters are monitored. In addition, hardwired manual start of HPCF C is provided from the main control room.

Motive power for the motor driven ECCS pumps is supplied from AC buses that can receive normal AC power or standby AC power from the DGs. Instrumentation power for all of the ECCS systems originate in the 125 VDC essential busses. The three LPFL systems, except valves with isolation functions, are supplied by the division I, II, and III AC and DC busses while the two HPCF system are supplied by the division II and III AC and DC busses. Control power for RCIC instruments and controls, except for valves with isolation functions, originates in the division I DC bus. ADS 1 is powered by the division I DC bus and ADS 2 by the division II DC bus. The LPFL and RCIC valves that provide isolation functions receive power from busses suitable for providing the redundant isolation functions.

BASES

BACKGROUND (continued)

Low Pressure Flooder (LPFL) System (Mode of the Residual Heat Removal System)

The LPFL consists of three independent subsystems. Each subsystem has separate and independent pumps, valves, and vessel injection paths.

The LPFL pumps and the associated DGs are initiated automatically when high drywell pressure or low reactor water level (Level 1) is detected. Automatic and manual opening of the injection valve to the vessel is prohibited until reactor pressure drops below the injection permissive setpoint. The LPFL pump motor starters are interlocked with bus undervoltage monitors to prevent starting the motors unless the bus voltage is adequate.

The LPFL pump motor and valves are provided with system level and device level manual controls to permit operator control of the systems.

The LPFL pumps start immediately if normal power is available. When normal AC power is not available LPFL actuation is delayed to allow sufficient time for the standby power to become available and to permit load sequencing so that the peak demand on the standby power source is within acceptable limits. The LPFL must provide flow to the vessel within a specified maximum time from receipt of an actuation signal and vessel pressure permissive when these delays are included.

A pump discharge pressure and pump flow transmitter monitor the discharge of each pump to control the minimum flow bypass valve. See B3.3.1.4, “ESF Actuation Instrumentation” for additional information.

The LPFL suction valves from the suppression pool are normally open. On receipt of an LPFL initiation signal, the reactor shutdown cooling system valves and the RHR test line valves are signaled to close to ensure that the LPFL pump discharge is aligned for injection to the reactor.

Reactor Core Isolation Cooling System (RCIC)

The instrumentation and controls for the RCIC system provides control of the RCIC pump, turbine and associated valves and other equipment during a loss-of-coolant accident, when the reactor vessel is isolated while in hot standby, when normal coolant flow is unavailable with the reactor vessel isolated, during a plant shutdown with loss of feedwater, and for a complete loss of AC power.

BASES

BACKGROUND (continued)

When actuated, the RCIC system pumps demineralizer water from the Condensate Storage Tank (CST) to the reactor vessel but may use the suppression pool as an alternate source of water. Suction flow will transfer automatically to the suppression pool on low CST level or high suppression pool level.

The RCIC system is initiated automatically when either high drywell pressure or low reactor vessel water Level 2 is detected and produces the design flow rate within a specified time. The system then functions to provide makeup water to the reactor vessel until the reactor vessel water level is restored. RCIC flow will shut down automatically when Reactor Water Level - High, Level 8 is detected. In addition, turbine overspeed and high exhaust pressure equipment protection signals will trip the turbine. The RCIC system is also shut down by the isolation feature described in the isolation section of this LCO.

A pump discharge pressure and pump flow transmitter monitor the discharge of each pump to control the minimum flow bypass valve. See LCO B3.3.1.4 “ESF Actuation Instrumentation” for additional information.

The RCIC turbine and valves are provided with system level and device level manual controls which permit the operator control of the systems.

High Pressure Core Flooder System (HPCF)

The HPCF consists of two independent subsystems (HPCF B and C). Each subsystem has separate and independent pumps, valves, and vessel injection paths.

The HPCF system is initiated when reactor vessel low water level (Level 1.5) or high drywell pressure is detected. The HPCF pumps’ motor starters are interlocked with bus undervoltage monitors to prevent starting the motors unless the bus voltage is adequate.

The HPCF will continue discharging to the reactor vessel until reactor high water level (Level 8) is detected. The HPCF then automatically stops flow by closing the injection valve but the motor will continue to run. The injection valve will reopen if reactor water level subsequently decreases to the low level initiation point.

The HPCF is provided with system level and device level manual controls which permit operator control of the systems. The manual controls for HPCF C diverse logic system initiation are hardwired and completely bypass the ECF and SSLC.

BASES

BACKGROUND (continued)

When actuated, the HPCF system pumps demineralizer water from the Condensate Storage Tank (CST) to the reactor vessel but may use the suppression pool as an alternate source of water. Suction flow will transfer automatically to the suppression pool on low CST level or high suppression pool level.

The HPCF pumps start immediately if normal AC power is available. When normal AC power is not available HPCF actuation is delayed to allow sufficient time for the standby power to become available and to permit load sequencing so that the peak demand on the standby power source is within acceptable limits. The HPCF must provide flow to the vessel within a specified maximum time from receipt of an actuation signal when these delays are included.

A pump discharge pressure and pump flow transmitter monitor the discharge of each pump to control the minimum flow bypass valve. A low suction pressure Function is also provided to protect the pumps from cavitation. See LCO basis B3.3.1.4, “ESF Actuation Instrumentation” for additional information on these signals.

Automatic Depressurization System (ADS)

Reactor depressurization by the ADS is provided to reduce the pressure during a loss-of-coolant accident where the HPCF and/or RCIC are unable to maintain vessel water level above the LPFL initiation point and reactor pressure remains above the low pressure injection permissive setpoint. Opening the ADS valves reduces pressure sufficiently to allow the LPFL systems to inject water at the design flow rate.

The motive power for opening the ADS valves is from local accumulators supplied by the high pressure nitrogen supply systems (Division I and II). The ADS accumulators have sufficient capacity to operate the safety relief valve one time at drywell design pressure or five times at normal drywell pressure with no external source of nitrogen.

Two ADS subsystems, ADS 1 and ADS 2 are provided. ADS 1 is controlled by a division I DLC Pair and ADS 2 is controlled by a division II DLC Pair. Each ADS division controls one of the two separate solenoid operated pilot valves on each Safety/Relief Valve (SRV) assigned to the ADS. Energizing either pilot valve causes the SRV to open.

ADS initiation is armed when low reactor water level (Level 1) persists for more then a specified amount of time (outside containment LOCA) or

BASES

BACKGROUND (continued)

when low reactor water level occurs concurrently with high drywell pressure (inside containment LOCA). When ADS is armed, the ADS initiation timer will start. While the ADS timer is running, ADS initiation may be interrupted by operator action or by loss of the arming signal. If the timer is not interrupted, ADS will initiate if any one of the 5 LPFL or HPCF pumps are operating when the timer times out.

Manual and automatic ADS inhibit is also provided to assure effectiveness of the Standby Liquid Control System for a postulated ATWS event. Figure B3.3.1.1-1 shows the channels and logic used for ADS inhibit. The automatic inhibit is removed when the APRMS indicate that power level is below a specified value and a reactor water level signal, which is independent of the ADS initiation reactor water level, indicates level is below Level 1.5.

Manual inhibit is provided by a keylocked operator switch in each ADS division. Each switch will inhibit ADS in that division if ADS has not initiated. The switches are ineffective once the ADS timers have timed out so they cannot be used to reclose the valves. The inhibit status is annunciated in the control room.

The reactor low water level initiation setting for the ADS is selected to depressurize the reactor vessel in time to allow adequate cooling by the LPFL systems following a loss-of-coolant accident with an assumed failure of the HPCF and/or RCIC.

Positive indication of operation of an HPCF or LPFL pump is detected by two pump discharge pressure transmitters connected to each pump. One transmitter serves the ADS 1 logic and the second serves the ADS 2 logic. These transmitters are different from the transmitter used for controlling the minimum flow valve (i.e. there are three pressure transmitters on each pump).

The reactor vessel low water Level 1 for ADS is sourced from 4 level transmitters. The low water Level 1.5 ATWS ADS inhibit signal is sourced from 4 level transmitters that are different from the Level 1 transmitters.

The ADS initiation timer setting is long enough to permit HPCF and/or RCIC to restore water level but short enough to provide adequate time for LPFL to adequately cool the fuel if the HPCF is assumed to be inoperable.

BASES

BACKGROUND (continued)

Manual actuation pushbuttons are provided to allow the operator to initiate ADS. Manual actuation requires a sequence of actions combined with annunciators to assure manual initiation of ADS is a deliberate act. Manual actuation is prohibited unless a pump discharge pressure permissive is active.

ISOLATION

The isolation portion of the SSLC automatically initiates closure of appropriate isolation valves. The function of the isolation valves, in combination with other accident mitigation systems, is to limit fission product release during and following postulated Design Basis Accidents (DBAs). Valve closure within the time limits specified for those isolation valves designed to close automatically ensures that the release of radioactive material to the environment will be consistent with the assumptions used in the ABWR safety analyses for a DBA. Reference 5 maps the isolation functions to the equipment that is isolated.

The isolation instrumentation includes the sensors, the ECF, the ELCS, load drivers, and switches that are necessary to cause closure of the valves provided to close off flow paths that could result in unacceptable fission product release. Functional diversity is provided by monitoring a wide range of independent parameters. The input data to the isolation logic originates in devices that monitor local parameters (e.g. high temperatures, high radiation, high flows) as well as primary system and containment system parameters that are indicative of a leak.

Manual isolation capability is provided by operator switches that initiate a division trip or individual valve closures.

The isolation functions are provided in the same SSLC devices as the ECCS, except for the MSIV closure, which is provided in the same SSLC devices as the RPS.

1. Main Steam Line Isolation

Two normally energized, solenoid operated, pilot valves are located on each MSIV. Both solenoids must be de-energized to cause the valve to close. Each pilot valve solenoid is controlled by independent series/parallel arrangements of four load drivers (eight total each MSIV) with the outputs of the four logic divisions connected to the load drivers

BASES

BACKGROUND (continued)

such that a trip signal from any two of the logic divisions results in de-energizing both solenoids. The load drivers for the outboard MSIVs are in division I and the load drivers for the inboard MSIVs are in division II.

The Functions used to initiate MSIV closure are:

- Reactor Vessel Water Level - Low, Level 1.5
- Main Steam Line Pressure - Low
- Main Steam Line Flow - High (in any one of the steam lines)
- Main Steam Tunnel Temperature - High
- Main Turbine Area Temperature - High
- Condenser Vacuum - Low.

2. Containment Isolation

Containment isolation closes valves (except MSIVs) and dampers in effluent pipes and ducts that penetrate the primary and/or secondary containment to prevent fission product release and initiates the standby gas treatment system (SGTS) to remove fission products from the secondary containment atmosphere. Isolation initiation is performed in the division I, II and III ESF DLCs. The Functions used for containment isolation initiation are:

- Reactor Vessel Water Level - Low, Level 1
- Reactor Vessel Water Level - Low, Level 2
- Reactor Vessel Water Level - Low, Level 3
- Drywell Pressure - High
- Drywell Sump Drain Low Conductivity Water (LCW) Radiation - High (Note: Single signal from PRRM system to division I DLC only. This signal is covered by LCO 3.3.1.4, “ESF Actuation Instrumentation”.)
- Drywell Sump Drain High Conductivity Water (HCW) Radiation - High. (Note: Single signal from PRRM system to division I DLC only. This signal is covered by LCO 3.3.1.4, “ESF Actuation Instrumentation”.)
- Reactor Building Area/Fuel Handling Area Exhaust Air Radiation - High. (Note: Signal received directly from PRRM discrete outputs to the DTFs.)

Each of these parameters is used to isolate one or more lines that penetrate the containment.

BASES

BACKGROUND (continued)

3. Reactor Core Isolation Cooling (RCIC) System Isolation

The RCIC isolation protects against breaks in the steam supply line to the RCIC turbine. RCIC isolation trip calculations are performed in the DTFs in all four ESF divisions. Isolation initiation for the inboard isolation valve is performed in the division I ESF DLC and for the outboard isolation valves in the division II DLC. The Functions used for RCIC isolation initiation are:

- RCIC Equipment Area Temperature – High
- RCIC Steam Supply Line Pressure – Low
- RCIC Steam Supply Line Flow – High
- RCIC Turbine Exhaust Pressure – High. (This Function is addressed in LCO 3.3.1.4, “ESF Actuation Instrumentation.”)

4. Reactor Water Cleanup System Isolation

This isolation protects against breaks in lines carrying CleanUp Water (CUW) and also serves to align CUW valves so they do not interfere with ECCS injection. Isolation initiation for the inboard isolation valve is performed in the division I ESF DLC and for the outboard isolation valves in the division II ESF DLC. The Functions used for CUW line isolation/ECCS lineup initiation are:

- CUW Area Temperatures - High
- CUW Differential Flow - High
- Main Steam Tunnel Temperature - High
- Reactor Vessel Water Level - Low, Level 2
- CUW Isolation on Standby Liquid Control Initiation. (This Function is addressed in LCO 3.3.1.4, “ESF Actuation Instrumentation”.)
- Reactor Vessel Steam Dome Pressure - High. (This Function is used only in division I DLC actuation logic to close the head spray valve.)

5. Shutdown Cooling System Isolation

This isolation protects against breaks in lines used in the shutdown cooling mode of the RHR and also serves to align RHR valves so they do not interfere with ECCS injection. Isolation/injection lineup initiation for the RHR loops are performed in the ESF DLCs as follows:

RHR LOOP	A	B	C
Inboard	Div. I	Div. II	Div. III
Outboard	Div. II	Div. III	Div. I

BASES

BACKGROUND (continued)

The Functions used for RHR isolation/ECCS line-up initiation are:

- RHR Area Temperatures - High
- Reactor Vessel Water Level - Low, Level 3
- Reactor Vessel Steam Dome Pressure - High

OTHER ESF FUNCTIONS

The SSLC provides actuation Functions for various other ESF Functions:

1. Diesel Generator (DG) Initiation. The DG are initiated on high drywell pressure, low reactor water Level 1.5 and Level 1, or Essential 4.16 kV bus undervoltage (covered in LCO 3.3.1.4, “ESF Actuation Instrumentation”).

2. Standby Gas Treatment Actuation. The Standby Gas Treatment (SGTS) system is automatically initiated on high drywell pressure, low reactor water Level 3, reactor building area exhaust air high radiation, or fuel handling area exhaust air high radiation.

3. Reactor Building Cooling Water/Service Water Actuation. This Feature is actuated on high drywell pressure, low Level 1, or 4.16 kV emergency bus undervoltage signals (covered in LCO 3.3.1.3).

4. Containment Atmospheric Monitoring System Start. The Containment Atmospheric Monitoring (CAM) system is automatically started on a high drywell pressure or low Level 1 signal.

5. Suppression Pool Cooling Actuation. Suppression pool cooling is automatically initiated on high suppression pool temperature.

6. Reactor Service Water System (RSW) Pump Trip and System Isolation Actuation. The RSW pumps and isolation of RSW system valves are initiated upon detection of high water level in the RCW/RSW heat exchanger rooms to provide flood protection (Ref. 11).

7. Feedwater Line Break Mitigation. The trip of condensate pumps is initiated upon detection of concurrent high drywell pressure and high feedwater differential pressure.

BASES

BACKGROUND (continued)

ATWS MITIGATION

The ABWR provides various features to mitigate a postulated Anticipated Transient Without Scram (ATWS) event. The ADS inhibit is as described above in the ADS Function of ECCS.

The Standby Liquid Control System (SLCS) initiation and Feedwater Runback (FWRB) ATWS mitigation features are performed by SSLC circuitry diverse to and independent of the microprocessor-based devices of the primary protective system functions. These Features are initiated by Reactor Vessel Steam Dome Pressure - High or Reactor Water Level-Low, Level 2 Functions when the SRNM ATWS permissive is active. The initiation signals are provided by separate I/O units that are located in the SSLC cabinets.

There is a separate I/O unit in each division for each of the functions. The separate I/O units are connected directly to the sensors in the division associated with the I/O unit. The outputs of all four I/O units are connected to four logic units (one in each division) using suitable isolation. Each logic unit uses 2 out of 4 logic to create initiation signals. The SRNM ATWS permissive function will permit initiation only when power level is above a specified value. The initiation signals from the four logic units are connected to a series/parallel arrangement of load drivers in the driven systems such that an initiation signal from any two of the logic units will cause actuation of SLC and FWRB ATWS mitigation features.

RECIRCULATION PUMP TRIPS

Automatic Recirculation Pump Trips (RPT) are included in the ABWR to maintain the MCPR within limits for some pressurization events at End of Cycle conditions (EOC-RPT) and to reduce core reactivity for postulated ATWS events (ATWS-RPT). The SSLC provides low Level 2 and composite EOC-RPT (turbine stop valve closure or turbine control valve fast closure) data to the RPT signal processing devices. See the basis for LCO 3.3.4.1, “ATWS & EOC RPT Instrumentation” for additional information.

BASES

BACKGROUND (continued)

SSLC SUMMARY

The SSLC is a complex of equipment and software that supports a variety of Functions and Features in a variety of configurations. Table B3.3.1.1-1 is a summary of the SSLC Functions and the protective equipment supported by the Functions.

APPLICABLE SAFETY ANALYSIS, LCO, and APPLICABILITY

The actions of the SSLC are assumed in the safety analyses of References 1, 2, and 8. The SSLC initiates appropriate protective actions when a monitored parameter is outside of a specified Allowable Value to preserve the integrity of the fuel cladding, the Reactor Coolant Pressure Boundary (RCPB), and the containment. The Allowable Values given in Table 3.3.1.1-1 are calculated using a prescribed setpoint methodology. The SSLC provides initiation signals for RPS, ESF and plant isolation.

SSLC instrumentation satisfies Criterion 3 of the NRC Polity Statement. Functions not specifically credited in the ABWR safety analysis are retained for the overall redundancy and diversity of the RPS as required by the NRC approved licensing basis.

The OPERABILITY of the SSLC is dependent on the OPERABILITY of the Functions specified in Table 3.3.1.1-1. Each Function must have a required number of OPERABLE divisions, with their setpoints within the specified Allowable Value, where appropriate. The signal processing channels within each division are calibrated consistent with applicable setpoint methodology assumptions. Each channel must also respond within its specified response time.

Where applicable, Allowable Values are specified for each SSLC Function specified in Table 3.3.1.1-1. Nominal trip setpoints are specified in the setpoint calculations. The nominal setpoints are selected to ensure that the effective trip points do not exceed the Allowable Value between successive CHANNEL CALIBRATIONS. Operation with an effective trip point less conservative than the nominal trip setpoint, but within its Allowable Value, is acceptable. A channel is inoperable if the effective trip point is outside the Allowable Value.

Setpoints are those predetermined values of output at which an action should take place. The numeric setpoints provided in the SSLC processor data base are compared to the measured process parameter (e.g., reactor vessel water level), and when the measured value of the process parameter exceeds the setpoint, the logic in the signal processors declares a trip condition for the parameter.

BASES

APPLICABLE SAFETY ANALYSIS, LCO, and APPLICABILITY (continued)

The analytic limits are derived from the limiting values of the process parameters obtained from the safety analysis. The Allowable Values are derived from the analytic limits, corrected for calibration, process, and some of the instrument errors. The normal trip setpoints are then determined accounting for the remaining instrument errors (e.g., drift). The trip setpoints derived in this manner provide adequate protection because instrumentation uncertainties, process effects, calibration tolerances, instrument drift, and severe environment errors (for channels that must function in harsh environments as defined by 10 CFR 50.49) are accounted for.

The individual SSLC Functions that are required to be OPERABLE in the MODES and other conditions specified in the Table 3.3.1.1-1 may be needed to mitigate the consequences of a design basis accident or transient. To ensure reliable initiation of protective actions several Functions are required for each safety system actuation to provide primary and diverse initiation signals.

This LCO covers all Functions that use connections to the DTFs and the NMS Functions. Functions, other than NMS, that are connected to the ESF DLCs or RTIS TLFs are covered in the system actuation LCOs.

Reactor Protection System

RPS is required to be OPERABLE in MODE 1, MODE 2, and MODE 5 with any control rod withdrawn from a core cell containing one or more fuel assemblies. Control rods withdrawn from a core cell containing no fuel assemblies do not affect the reactivity of the core and therefore do not need scram capability. The required “Shut Down Margin (SDM)” (LCO 3.1.1) and “Refuel Position One-Rod-Out Interlock” (LCO 3.9.2) ensure that no event requiring RPS will occur when the reactor mode switch is in the refueling position.

During normal operation in MODES 3 and 4, all control rods are fully inserted and the Reactor Mode Switch Shutdown Position control rod withdrawal block Function (See LCO 3.3.5.1, “Control Rod Block Instrumentation”) does not allow any control rod to be withdrawn. Under these conditions, the RPS scram is not required to be OPERABLE.

The OPERABILITY of scram pilot valves and associated solenoids and backup scram valves, described in the Background section, are not addressed by this LCO.

BASES

APPLICABLE SAFETY ANALYSIS, LCO, and APPLICABILITY (continued)

Emergency Core Cooling System (ECCS)

The ECCS is initiated to preserve the integrity of the fuel cladding by limiting the post LOCA peak cladding temperature to less than the 10 CFR 50.46 limits. In general, the ECCS initiation Functions are required to be OPERABLE in the MODES or other specified conditions that may require ECCS (or DG) initiation to mitigate the consequences of a design basis accident or transient. The applicability basis for the ECCS systems are given in LCO 3.5.1, “ECCS-Operating” and 3.5.2, “ECCS-Shutdown.” To ensure reliable ECCS and DG function, a combination of Functions is required to provide primary and secondary initiation data.

Isolation

Isolation valve closures are used to limit the offsite dose as described in LCO 3.6.1.3, “Primary Containment Isolation Valves.” In general, the individual Functions that initiate isolation valve closure are required to be OPERABLE in MODES 1, 2, and 3 consistent with the Applicability for LCO 3.6.1.1, “Primary Containment.” Functions that have different Applicabilities are discussed below in the individual Functions discussion.

ATWS

Functions that are used to mitigate the affect of ATWS events are required to be OPERABLE in MODES 1 and 2. Refer to LCO 3.3.1.3, “SLC and FWRB Actuation,” and LCO 3.3.4.1, “ATWS and EOC-RPT Instrumentation” for additional bases discussion.

Functions

The specific Applicable Safety Analyses, LCO, and Applicability discussions are listed below on a Function by Function basis.

1.a & b. Startup Range Neutron Monitor (SRNM) Neutron Flux - High/Short Period

The SRNMs monitor neutron flux levels from very low power levels to a power level where the Average Power Range Monitors (APRMs) are on scale. There is a specified minimum overlap between the SRNMs and APRMs to assure continuous monitoring of neutron flux levels. The SRNMs generate trip signals to prevent fuel damage resulting from abnormal positive reactivity insertions under conditions that are not

BASES

APPLICABLE SAFETY ANALYSIS, rod withdrawal. LCO, and APPLICABILITY (continued)

covered by the APRMs. The SRNMs generate both high neutron flux and high rate of change of neutron flux (i.e. short period) trips. In this power range, the most significant source of reactivity change is due to control

The SRNM provides diverse protection for the Rod Worth Minimizer (RWM) in the Rod Control & Information System (RCIS) which monitors and controls the movement of control rods at low power. The RWM prevents the withdrawal of an out of sequence control rod during startup that could result in an unacceptable neutron flux excursion. The SRNM provides mitigation of any neutron flux excursion. ABWR safety analyses have been performed (Ref. 6) to evaluate the consequences of control rod withdrawal events during startup that are mitigated only by the SRNM. This analysis, which assumes that the most limiting SRNM bypass or out of service condition, demonstrates that the SRNMs provide protection against control rod withdrawal errors and results in peak fuel energy depositions below the fuel failure threshold criterion.

The SRNMs are also capable of limiting other reactivity excursions during startup, such as cold water injection events, although no credit is specifically assumed in any ABWR safety analysis.

The ten SRNM fixed in-core regenerative fission chambers are each connected to electronics suitable for monitoring neutron flux for power levels up to 15% RTP. The SRNM detectors are evenly distributed throughout the core and are located slightly above the fuel mid-plane. The SRNM's are assigned to the four Neutron Monitoring System (NMS) divisions and have bypass features as described in B3.3.2.1, "SRNM Instrumentation".

For each division, a high flux, short period, or INOP trip from any one SRNM channel will result in a trip signal from that division. The SRNM trip data is transmitted to the TLFs in the RTIS. The division of sensor bypass in the RPS portion of the RTIS does not bypass the SRNM trip signal input.

The Startup Range Neutron Monitor Neutron Flux – High/Short Period Functions must be OPERABLE during MODE 2 when control rods may be withdrawn and the potential for criticality exists. In MODE 5, when a cell with fuel has its control rod withdrawn, the SRNMs provide monitoring for and protection against unexpected reactivity excursions. In MODE 1, the APRM System, the simulated thermal power monitor, and the Automatic Thermal Limit Monitor (ATLM) Functions of the RCIS provide protection against control rod withdrawal error events and the SRNMs are

BASES

APPLICABLE SAFETY ANALYSIS, LCO, and APPLICABILITY (continued)

not required. The short period Function is automatically bypassed and is not required to be OPERABLE at very low power levels.

1.c. SRNM ATWS Permissive

During some low power plant conditions the ATWS trips could interfere with normal plant maneuvering and cause unnecessary stress on plant equipment. In order to prevent the risks associated with the stresses, and to confirm that an ATWS may have occurred, the SLCS initiation and Feedwater Runback ATWS Functions are disabled at low SRNM neutron flux levels.

The SRNM ATWS Permissive Function is used in the SLC and FWRB ATWS mitigation Features to permit initiation when the power level as detected by the SRNM is greater than the Allowable Value. When all of the unbypassed SRNM channels indicate that power level is less than the Allowable Value then the permissive is removed and the affected ATWS mitigation Features are automatically inhibited. This Function is implicitly assumed in the analysis of Reference 7.

This Function is required to be OPERABLE in MODES 1 and 2 since these are the MODES where the ATWS Functions must be OPERABLE. See B3.3.1.3, “SLC & FWRB Actuation” for the applicability basis.

The Allowable Value is selected high enough to permit the necessary plant maneuvers, and low enough to assure that ATWS is available when the plant power level will not permit long term cooling by the ECCS and their support systems.

1.d. SRNM – Inop

This trip signal provides confidence that a minimum number of SRNMs are OPERABLE. Whenever the SRNM self-test and monitoring detects a condition that could prevent it from generating a trip when needed an INOP/TRIP signal will be sent to all four TLFs and all four SSLC ATWS logic units. This Function was not specifically credited in any ABWR safety analysis, but it is retained for the overall redundancy and diversity of the RPS as required by the NRC approved licensing basis.

This Function is provided by self-test and other monitoring features and is a discrete signal so there is no Allowable Value for this Function.

BASES

APPLICABLE ANALYSIS, LCO, and APPLICABILITY (continued)

This Function is required to be OPERABLE when the Startup Range Monitor Neutron Flux – High/Short Period and ATWS Functions are required.

2.a. Average Power Range Monitor Neutron Flux - High, Setdown

The APRM divisions receive input signals from the Local Power Range Monitors (LPRM) distributed throughout the reactor core. The APRM divisions average these LPRM signals to provide a continuous indication of average reactor power from a few percent to greater than Rated Thermal Power (RTP). For operation at low power (i.e., MODE 2), the Average Power Range Monitor Neutron Flux – High/Setdown Function is capable of generating a trip signal that prevents fuel damage resulting from abnormal operating transients in this power range. For most operations at low power levels, the Average Power Range Monitor Neutron Flux – High/Setdown Function will provide a secondary scram to the Startup Range Neutron Monitor Neutron Flux – High/Short Period Function because of the relative setpoints. With the SRNMs near the high end of their range, it is possible that the Average Power Range Monitor Neutron Flux – High/Setdown Function will provide the primary trip signal for a corewide increase in power.

No specific ABWR safety analyses take direct credit for the Average Power Range Monitor Neutron Flux – High/Setdown Function. However, this Function indirectly ensures that, before the reactor mode switch is placed in the run position, reactor power does not exceed 25% RTP (SL 2.1.1.1) when operating at low reactor pressure and low core flow. Therefore, it indirectly prevents fuel damage during significant reactivity increases with THERMAL POWER < 25% RTP.

The APRM System is made up of four independent divisions. Each APRM division transmits a trip signal to all four RPS TLFs using suitable isolators. The system is designed to allow one division to be bypassed. Four divisions of APRM Neutron Flux – High/Setdown are required to be OPERABLE to ensure that no single failure will preclude a scram from this Function on a valid signal. In addition, to provide adequate coverage of the entire core, at least 32 LPRM inputs are required for each APRM division, with at least two LPRM inputs from each of the four axial levels at which the LPRMs are located.

The Allowable Value is based on preventing significant increases in power when THERMAL POWER is < 25% RTP.

BASES

APPLICABLE SAFETY ANALYSIS, LCO, and APPLICABILITY (continued)

The Average Power Range Monitor Neutron Flux – High/Setdown Function must be OPERABLE during MODE 2 when control rods may be withdrawn. In MODE 1, the Average Power Range Monitor Neutron Flux – High Function provides protection against reactivity transients and the ATLM function of the RCIS protects against control rod withdrawal error events.

2.b. Average Power Range Monitor Simulated Thermal Power - High, Flow Biased

The Average Power Range Monitor Simulated Thermal Power - High/flow biased Function monitors a calculated value for the THERMAL POWER being transferred to the reactor coolant. The neutron flux to thermal power relationship is modeled using a single time constant to represent the fuel heat transfer dynamics and calculate a parameter that is proportional to the THERMAL POWER in the reactor. The trip setpoint is varied as a function of recirculation flow. The setpoint is proportional to the reactor power that corresponds to the recirculation flow for a rod pattern that provides 100% power at 100% recirculation flow. There is an upper limit on the setpoint that is lower than the APRM Fixed Neutron Flux – High Allowable Value.

The Average Power Range Monitor Simulated Thermal Power – High/Flow Biased Function provides protection against transients where THERMAL POWER increases slowly (such as the loss of feedwater heating event) and protects the fuel cladding integrity by ensuring that the MCPR SL is not exceeded. During these events, the thermal power increase does not significantly lag the neutron flux response and, because of a lower trip setpoint, will initiate a scram before the high neutron flux scram. For rapid neutron flux increase events, the thermal power lags the neutron flux and the Average Power Range Monitor Fixed Neutron Flux - High Function will provide a scram signal before the Average Power Range Monitor Simulated Thermal Power – High/Flow Biased Function setpoint is exceeded.

This Function's trip signal is sent to RPS over the same data transmission paths as those described in Function 2.a above and is subject to the same OPERABILITY conditions.

Each APRM division receives a total recirculation flow data value. The flow is measured using 4 independent flow transmitters that monitor the core plate pressure drop.

BASES

APPLICABLE SAFETY ANALYSIS, LCO, and APPLICABILITY (continued)

The Allowable Value for the upper limit is based on analyses that take credit for the Average Power Range Monitor Simulated Thermal Power – High/Flow Biased Function for the mitigation of the loss of feedwater heater event. The thermal power time constant of < 7 seconds is based on the fuel heat transfer dynamics.

The Average Power Range Monitor Simulated Thermal Power – High/Flow Biased Function is required to be OPERABLE in MODE 1 when there is the possibility of generating excessive thermal power and potentially exceeding the SL applicable to high pressure and core flow conditions (MCPR SL). During MODES 2 and 5, other SRNM and APRM Functions provide protection for fuel cladding integrity.

2.c. Average Power Range Monitor Fixed Neutron Flux – High

The APRM divisions provide the primary indication of neutron flux within the core and respond almost instantaneously to neutron flux increases. The Average Power Range Monitor Fixed Neutron Flux – High Function is capable of generating a trip signal to prevent fuel damage or excessive RCS pressure. For the overpressurization protection analysis of Reference 8, the Average Power Range Monitor Fixed Neutron Flux – High Function is assumed to terminate the main steam isolation valve (MSIV) closure event and, along with the safety/relief valves (S/RVs), limits the peak reactor pressure vessel (RPV) pressure to less than the ASME Code limits. In addition, this Function is assumed in the runout of all RIPs, inadvertent initiation of shutdown cooling, fast closure of 1 turbine control valve, and pressure regulator downscale failure analyses of Reference 2.

This Function's trip signal is sent to the TLFs over the same data transmission paths as those described for Function 2.a above and is subject to the same OPERABILITY conditions.

The Allowable Value is based on the Analytical Limit assumed in the vessel overpressure protection analyses.

The Average Power Range Monitor Fixed Neutron Flux – High Function is required to be OPERABLE in MODE 1 where the potential consequences of the analyzed transients could result in the SLs (e.g., MCPR and RCS pressure) being exceeded. Although the Average Power Range Monitor Fixed Neutron Flux – High Function is assumed in the CRDA analysis that is applicable in MODE 2, the Average Power Range Monitor Neutron Flux – High, Setdown Function conservatively bounds the assumed trip

BASES

APPLICABLE SAFETY ANALYSIS, LCO, and APPLICABILITY (continued)

and, together with the assumed SRNM trips, provides adequate protection. Therefore, the Average Power Range Monitor Fixed Neutron Flux – High Function is not required in MODE 2.

2.d. Average Power Range Monitor – Inop

Whenever the APRM self-test and monitoring algorithms detect a condition that could prevent it from generating a trip when needed or the APRM has insufficient OPERABLE LPRMs and the division is not bypassed, an INOP/TRIP signal will be sent to all four RPS divisions over the same data transmission paths as those described for Function 2.a above. Interlocks prevent placing more then one division in bypass so only one division may be inoperable without causing a reactor trip. This Function was not specifically credited in any ABWR safety analysis, but it is retained for the overall redundancy and diversity of the RPS as required by the NRC approved licensing basis.

Four divisions of Average Power Range Monitor – Inop are required to be OPERABLE to ensure that no single failure will preclude a scram from this Function on a valid signal.

There is no Allowable Value for this Function.

This Function is required to be OPERABLE in the MODES where the APRM Functions are required.

2.e. Rapid Core Flow Decrease

A rapid core flow decrease from high power can jeopardize the MCPR SL. The Rapid Core Flow Decrease Function causes a scram for rapid flow decreases when thermal power is greater than a specified level to provide confidence that the SL will not be violated.

The Neutron Monitoring System Rapid Core Flow Decrease Function provides protection against transients where core flow decreases rapidly. This function is assumed in the all pump trip analysis of Reference 2.

The scram signal from this function is sent to the RPS TLFs over the same data transmission path as the APRM trips. The APRM System is divided into four divisions. Each APRM division sends a trip signal to all four RPS TLFs via suitable isolators. The rate of flow decrease is calculated from total recirculation flow data. The flow is measured using 4 independent flow transmitters that monitor the core plate pressure drop.

BASES

APPLICABLE SAFETY ANALYSIS, LCO, and APPLICABILITY (continued)

The Neutron Monitoring System Rapid Core Flow Decrease Function is automatically bypassed when thermal power is less than the specified condition of applicability. The thermal power value calculated for the Average Power Range Monitor Simulated Thermal Power – High, Flow Biased Function is used to implement the bypass.

Four divisions of this Function are required to be OPERABLE to ensure that no single failure will preclude a scram from this Function on a valid signal.

The Allowable Value for this function is derived from the analytic limit used in the all pump trip analysis.

The Neutron Monitoring System Rapid Core Flow Decrease Function is required to be OPERABLE in MODE 1 when thermal power is greater than 75% RTP where there is a possibility of a rapid flow decrease jeopardizing the MCPR SL. At lower power levels a trip of all recirculation pumps will not violate the MCPR SL.

2.f. Oscillation Power Range Monitor

The Oscillation Power Range Monitor (OPRM) Function detects the existence of neutron flux oscillations that could cause violation of the fuel thermal limits. This Function is not assumed in any ABWR safety analysis. However, it is included for redundancy and diversity and to provide confidence that the assumptions used in fuel limits calculations are preserved.

The OPRM uses two algorithms to detect flux oscillations. Each algorithm operates on several groups of LPRMs (called OPRM cells). The OPRM cells are selected to provided a representation of the radial neutron flux distribution so that local flux oscillations will be detected. The OPRM logic is as shown in Reference 4.

BASES

APPLICABLE SAFETY ANALYSIS, LCO, and APPLICABILITY (continued)

The amplitude/growth rate algorithm measures the amplitude of flux oscillations as a fraction of the average value (i.e. % of point). The algorithm is invoked if the peak to average value exceeds a specified amount. The algorithm measures the period of the oscillation to determine if it is within the range expected for thermo-hydraulic core oscillations. If it is, then the cell flux is scanned for three of the measured periods. If the sensed flux increases (growth rate) by a specified amount or becomes larger than a specified amount (amplitude) within this period, then a trip is declared.

The period based algorithm measures the period of successive peaks and minimums in sensed flux. If the period is within the range expected for core thermo-hydraulic oscillations for a specified number of times and the amplitude is greater than a specified value, then a trip is declared.

There are four divisions of OPRMs, one in each NMS division. Each OPRM acquires data from LPRMs distributed throughout the core. Therefore, each OPRM is capable of detecting an oscillation in any core region. Each OPRM sends trip data to all four RPS TLFs via suitable isolators.

The potential for power oscillations in a BWR is restricted to operation conditions with low core flow and relatively high power. In order to reduce the potential for spurious trips due to LPRM noise, the OPRM function is automatically bypassed when the power flow relationship below the characteristic shown in Figure 3.3.1.1-1.

The Allowable Values for the trip and bypass setpoints are based on extensive analysis of BWR core oscillation characteristics.

BASES

APPLICABLE SAFETY ANALYSIS, LCO, and APPLICABILITY (continued)

The OPRM Function is required to be OPERABLE when the power/flow characteristic is as shown in Figure 3.3.1.1-1 since this shows conditions where core oscillations can occur. Four divisions of this function are required to be OPERABLE, to ensure that no single failure will preclude a scram from this Function on a valid signal.

2.g. APRM ATWS ADS Permissive

During a postulated ATWS event the Standby Liquid Control (SLC) System injects borated water into the reactor to reduce power level. Operation of any Safety/Relief valves would interfere with proper operation of SLC. Therefore, ADS is inhibited if APRM indicated power level remains above the SLC initiation point. The APRM ATWS ADS Permissive Function is combined with a Reactor Water Level - Low, Level 1.5 signal such that the ADS is inhibited unless both power and level are below their setpoints.

The APRM ATWS ADS Permissive Function is used in the ADS portion of the SSLC. When two of the four APRM channels indicate that power level is less than the Allowable Value then the inhibit is removed and ADS can occur based on the ADS initiation signal data.

Four channels of this Function is required to be OPERABLE in Modes 1 and 2 since these are the MODES where the ATWS functions must be OPERABLE. See the B3.3.1.3, “SLC and FWRB Actuation” for the applicability basis.

The Allowable Value is selected to be consistent with the SRNM ATWS Permissive Allowable Value.

3.a., b. & c. Reactor Vessel Steam Dome Pressure – High

An increase in the RPV pressure during reactor operation compresses the steam voids and results in a positive reactivity insertion. This causes the neutron flux and THERMAL POWER transferred to the reactor coolant to increase, which could challenge the integrity of the fuel cladding and the RCPB. None of the ABWR safety analysis takes direct credit for this Function. However, the Reactor Vessel Steam Dome Pressure – High Function initiates a scram (3.a) for transients that results in a pressure increase, counteracting the pressure increase by rapidly reducing core power. For the overpressure protection analysis of Reference 8, the reactor scram which terminates the MSIV closure event is conservatively assumed to occur on the Average Power Range Monitor

BASES

APPLICABLE SAFETY ANALYSIS, LCO, and APPLICABILITY (continued)

Fixed Neutron Flux – High signal, and, along with the S/RVs, limits the peak RPV pressure to less than the ASME Section III Code limits.

The Reactor Steam Dome Pressure – High Function also isolates (3.b) the shutdown cooling portion of the RHR System and closes the head spray line from the CUW system. This interlock is provided only for equipment protection to prevent an intersystem LOCA scenario and credit for the interlock is not assumed in any accident or transient analysis for the ABWR.

Automatic Standby Liquid Control System (SLCS) and Feedwater Runback (FWRB) are also initiated by this Function (3.c). These features are provided to mitigate a postulated ATWS event.

Each DTF receives a data value representing measured reactor pressure in its division and compares the value against a numeric setpoint to determine if a trip is required for Functions 3.a and 3.b. Each I/O unit receives a separate signal directly from the process sensors for Function 3.c. The I/O unit compares the signal with a setpoint to generate the ATWS mitigation Feature initiation signal.

Reactor pressure is measured using four independent (separate vessel taps, instrument piping, etc) pressure transmitters connected to the RPV steam space. The four sensors are connected to both the RDLC and I/O unit in the same division. The Reactor Vessel Steam Dome Pressure - High Allowable Value is chosen to provide a sufficient margin to the ASME Section III Code limits during pressurization events.

Four divisions of Reactor Vessel Steam Dome Pressure – High Function are required to be OPERABLE to ensure that no single instrument failure will preclude a protective action from this Function on a valid signal.

Function 3.a is required to be OPERABLE in MODES 1 and 2 since these are the MODES where RPS is required to be OPERABLE. Function 3.a is not required to be OPERABLE in MODE 5 since there is no possibility of high pressure in this MODE.

Function 3.b is required to be OPERABLE in MODES 1, 2, and 3 when the RCS may be pressurized and the potential for pressure increase exists.

Function 3.c is required to be OPERABLE in MODES 1 and 2 since these are the MODES where ATWS features must be OPERABLE.

BASES

APPLICABLE SAFETY ANALYSIS, LCO, and APPLICABILITY (continued)

4. Reactor Steam Dome Pressure – Low (Injection Permissive)

Low reactor steam dome pressure signals are used as permissives for the low pressure ECCS subsystems. This ensures that, prior to opening the injection valves of the low pressure ECCS subsystems, the reactor pressure has fallen to a value below these subsystems' maximum design pressure. The Reactor Steam Dome Pressure – Low is one of the Functions assumed to be OPERABLE and capable of permitting initiation of the ECCS during the transients analyzed in Reference 1. In addition, the Reactor Steam Dome Pressure – Low Function is directly assumed in the analysis of the Design Basis Accident (maximum steamline break, maximum feedwater line break, or maximum RHR shutdown suction line break). The core cooling function of the ECCS, along with the scram action of the RPS, ensures that the fuel peak cladding temperature remains below the limits of 10 CFR 50.46.

Each ESF DTF receives a data value representing measured reactor pressure in its division and compares the value against a numeric setpoint to determine if a trip is required. Reactor pressure is measured using four independent (separate vessel taps, instrument piping, etc) pressure transmitters connected to the RPV steam space.

The Allowable Value is low enough to prevent overpressurizing the equipment in the low pressure ECCS, but high enough to ensure that the ECCS injection prevents the fuel peak cladding temperature from exceeding the limits of 10 CFR 50.46.

Four divisions of Reactor Steam Dome Pressure - Low Function are required to be OPERABLE when the associated ECCS is required to be OPERABLE to ensure that no single instrument failure can preclude ECCS initiation. Refer to LCO 3.5.1 and LCO 3.5.2 for Applicability Bases for the low pressure ECCS subsystems.

5. Reactor Vessel Water Level – High, Level 8

High RPV water level indicates that sufficient cooling water inventory exists in the reactor vessel such that there is no danger to the fuel. Therefore, the Level 8 signal is used to automatically terminate RCIC and HPCF injection to prevent overflow into the Main Steam Lines (MSLs). RCIC injection is terminated by closing the RCIC steam supply, steam supply bypass, and cooling water supply valves. HPCF injection is terminated by closing the injection valve. The Reactor Vessel Water Level - High, Level 8 Function is not assumed in any ABWR accident or transient analyses. It is retained since it provides a potentially significant

BASES

APPLICABLE SAFETY ANALYSIS, LCO, and APPLICABILITY (continued)

reduction in risk.

Each ESF DTF receives a data value representing measured reactor vessel water level in its division and compares it against a numeric setpoint to determine if a Level 8 trip is required. The reactor water level signals originate in four independent (separate vessel taps, instrument piping, etc.) level transmitters that sense the pressure difference between a constant column of water (reference leg) and the effective water column (variable leg) in the vessel. A concurrent high level signal from any two or more of the sensors will cause termination of the injection flows.

Four divisions of the Reactor Vessel Water Level – High, Level 8 Function are required to be OPERABLE when the associated ECCS is required to be OPERABLE to ensure that no single instrument failure can preclude ECCS initiation due to false high level. Refer to LCO 3.5.1, “ECCS-Operating” and LCO 3.5.2, “ECCS-Shutdown” for Applicability Bases for the low pressure ECCS subsystems.

6.a. & b. Reactor Vessel Water Level – Low, Level 3

Low RPV water level indicates the capability to cool the fuel may be threatened. Therefore, a reactor scram is initiated at Level 3 to substantially reduce the heat generated in the fuel from fission. The Reactor Vessel Water Level – Low, Level 3 scram Function (6.a) is assumed in the LOCA analysis of Reference 1, the trip off all feedpumps analysis in Reference 2, and the outside containment feedwater line break analysis in Reference 2.

This Function (6.b) also initiates a containment isolation, starts the SGTS, and isolates the RHR shutdown cooling mode. The isolation functions are not specifically assumed in any of the ABWR safety analysis, however, they are implicitly assumed in fission release calculations since the paths they isolate are assumed to be isolated.

The reactor scram reduces the amount of energy required to be absorbed and, along with the isolation and Emergency Core Cooling Systems (ECCS) actions, ensures that the fuel peak cladding temperature remains below the limits of 10 CFR 50.46.

Each DTF receives a data value representing measured reactor vessel level in its division and compares it against a numeric setpoint to determine if a Level 3 trip is required. The reactor water level signals originate in four independent (separate vessel taps, instrument

BASES

APPLICABLE SAFETY ANALYSIS, LCO, and APPLICABILITY (continued)

piping, etc.) level transmitters that sense the pressure difference between a constant column of water (reference leg) and the effective water column (variable leg) in the vessel.

Four divisions of Reactor Vessel Water Level – Low, Level 3 Function are required to be OPERABLE to ensure that no single instrument failure will preclude a protective action from this Function on a valid signal.

The Reactor Vessel Water Level – Low, Level 3 Allowable Value is selected to ensure that, for transients involving loss of all normal feedwater flow with successful operation of a high pressure system, initiation of the low pressure ECCS at RPV Water Level 1 will not be required.

Reactor scram on this Function is required in MODES 1 and 2 where considerable energy exists in the RCS resulting in the limiting transients and accidents. Isolation initiation on this function is required in modes 1, 2, and 3 which is consistent with the applicability of LCO 3.6.1.1, “Primary Containment.” Shutdown cooling isolation is also required to be OPERABLE during CORE ALTERATIONS and operations with the potential for draining the reactor vessel.

7.a., b. & c. Reactor Vessel Water Level – Low, Level 2

Should RPV water level decrease too far, fuel damage could result. Low reactor water Level 2 indicates that normal feedwater flow is insufficient to maintain reactor vessel water level and that the capability to cool the fuel may be threatened. Therefore, the RCIC system is initiated at Level 2 to assist in maintaining water level above the active fuel. Reactor Vessel Water Level – Low, Level 2 is one of the Functions (7.a) assumed to be OPERABLE and capable of initiating RCIC during the transients analyzed in Reference 2 and 8. The Reactor Vessel Water Level – Low, Level 2 Function associated with RCIC is directly assumed in the analysis of the Design Basis Accident in Reference 1 (maximum steamline break, or maximum feedwater line break, or maximum RHR shutdown suction line break).

This Function also initiates a containment isolation and isolates the Reactor Water Clean-up system. The isolation Functions (7.b) are not specifically assumed in any of the ABWR safety analysis, however, they are implicitly assumed in fission release calculations since the paths they isolate are assumed to be isolated.

BASES

APPLICABLE SAFETY ANALYSIS, LCO, and APPLICABILITY (continued)

The core cooling function of the ECCS, along with the isolation and RPS scram actions, ensures that the fuel peak cladding temperature remains below the limits of 10 CFR 50.46.

Automatic Standby Liquid Control System (SLCS) and Feedwater Runback (FWRB) are also initiated by this Function (7.c). These features are provided to mitigate a postulated ATWS event. The ATWS-RPT initiation on this Function is addressed in LCO 3.3.4.1, “ATWS and EOC-RPT Instrumentation.” This Function is assumed in the analysis of Reference 7.

Each ESF DTF receives a data value representing measured reactor vessel water level in its division and compares it against a numeric setpoint to determine if a Level 2 trip is required for Functions 7.a and 7.b. Each I/O unit receives a separate signal directly from the process sensors for Function 7.c. The I/O unit compares the signal with a setpoint to generate the ATWS mitigation Feature initiation signal.

The reactor water level signals originate in four independent (separate vessel taps, instrument piping, etc.) level transmitters that sense the pressure difference between a constant column of water (reference leg) and the effective water column (variable leg) in the vessel. The four sensors are connected to both the I/O unit and RDLC in the same division.

The Reactor Vessel Water Level – Level 2 Allowable Value is chosen such that for complete loss of feedwater flow, the RCIC System flow, coupled with an assumed failure of the high pressure core flooders, will be sufficient to avoid initiation of low pressure ECCS at Reactor Vessel Water Level – Low, Level 1.

Four divisions of Reactor Vessel Water Level – Low, Level 2 Function are required to be OPERABLE to ensure that no single instrument failure will preclude a protective action from this Function on a valid signal.

The Reactor Vessel Water Level – Low, Level 2 Functions 7.a and 7.b are required to be OPERABLE in MODES 1, 2, & 3. The CUW isolation is also required to be OPERABLE during CORE ALTERATIONS or operations with the potential for draining the reactor vessel. Refer to LCO 3.5.1, “ECCS-Operating” and LCO 3.5.2, “ECCS-Shutdown” for Applicability Bases for the RCIC system and LCO 3.6.1.1, “Primary Containment” for the Applicability basis for isolation.

BASES

APPLICABLE SAFETY ANALYSIS, LCO, and APPLICABILITY (continued)

Function 7.c is required to be OPERABLE in MODES 1 and 2 since these are the MODES where ATWS mitigation Features must be OPERABLE. See B3.3.1.3 “SLC and FWRB Actuation” for applicability basis.

8.a., b., & c. Reactor Vessel Water Level – Low, Level 1.5

Low RPV water level indicates that the capability to cool the fuel may be threatened. Should RPV water level decrease too far, fuel damage could result. Therefore, the HPCF Systems and associated DGs are initiated at Level 1.5 to maintain level above the top of the active fuel. The Reactor Vessel Water - Low, Level 1.5 is one of the Functions (8.a) assumed to be OPERABLE and capable of initiating HPCF during the transients analyzed in References 2 and 8. The Reactor Vessel Water Level - Low, Level 1.5 Function associated with HPCF is directly assumed in the analysis of the Design Basis Accident given in Reference 1 (maximum steamline break, or maximum feedwater line break, or maximum RHR shutdown suction line break).

The Function 8.b initiates an MSIV closure. The MSIV closure is not specifically assumed in any ABWR safety analysis, however, it is implicitly assumed in fission product release calculations since the calculations assume the main steam lines are isolated.

The Function 8.c removes the ATWS ADS inhibit when the APRM ATWS ADS Permissive is enabled. This Function is provided to prevent the ADS from interfering with Standby Liquid Control effectiveness for a postulated ATWS event. The operability of this Function is implicitly assumed in the analysis of reference 7.

The core cooling function of the ECCS, along with scram and MSIV closure, ensures that the fuel peak cladding temperature remains below the limits of 10 CFR 50.46.

Each DTF receives a data value representing measured reactor vessel water level in its division and compares it against a numeric setpoint to determine if a Level 1.5 trip is required. The reactor water level signals originate in four independent (separate vessel taps, instrument piping, etc.) level transmitters that sense the pressure difference between a constant column of water (reference leg) and the effective water column (variable leg) in the vessel.

BASES

APPLICABLE SAFETY ANALYSIS, LCO, and APPLICABILITY (continued)

The Reactor Vessel Water Level – Level 1.5 Allowable Value is chosen such that, for complete loss of feedwater flow, the HPCF flow, coupled with an assumed failure of the RCIC, will be sufficient to avoid initiation of LPFL at Reactor Vessel Water Level – Low, Level 1.

Four divisions of Reactor Vessel Water Level – Low, Level 1.5 Function are required to be OPERABLE to ensure that no single instrument failure will preclude a protective action from this Function on a valid signal.

The Reactor Vessel Water Level – Low, Level 1.5 Functions 8.a and 8.b are required to be OPERABLE in modes 1, 2, & 3. Function 8.a is also required to be OPERABLE in MODES 4 and 5 when HPCF is required to be OPERABLE to satisfy the requirement for OPERABLE ECCS pumps when RPV level is less than a specified value above the vessel flange. Refer to LCO 3.5.1, “ECCS-Operating” and LCO 3.5.2, “ECCS-Shutdown” for Applicability Bases for the HPCF system and LCO 3.6.1.1, “Primary Containment” for the Applicability basis for isolation.

The Function 8.c is required to be OPERABLE in Modes 1 and 2 since these are the MODES where the ATWS functions must be OPERABLE. See B3.3.1.3, “SLC and FWRB Actuation” for the applicability basis.

9.a., b. & c. Reactor Vessel Water Level – Low, Level 1

Low reactor vessel water level indicates that the capability to cool the fuel may be threatened. Should RPV water level decrease too far, fuel damage could result. RCW, ADS, LPFL, and the associated DGs are initiated at Level 1 to ensure that low pressure flooding is available to prevent or minimize fuel damage. The Reactor Vessel Water Level – Low, Level 1 ADS and LPFL initiation (9.a&b) is assumed in the analysis of Design Basis Accidents (maximum steamline break, or maximum feedwater line break, or maximum RHR shutdown suction line break) (Ref. 1).

Additional details on the conditions for initiating ADS are given in the background section of this LCO.

This Function (9.c) is also used in the containment isolation logic. The containment isolation is not specifically assumed in any of the ABWR safety analysis, however, they are implicitly assumed in fission release calculations since the calculations assume these paths are isolated.

The core cooling function of the ECCS, along with the scram and isolation actions, ensures that the fuel peak cladding temperature remains below the limits of 10 CFR 50.46.

BASES

APPLICABLE SAFETY ANALYSIS, LCO, and APPLICABILITY (continued)

Each ESF DTF receives two data values from independent transmitters representing measured reactor vessel water level from the ECF in its division and compares them separately against a numeric setpoint to determine if a Level 1 trip is required. The reactor water level signals originate in eight level transmitters that sense the pressure difference between a constant column of water (reference leg) and the effective water column (variable leg) in the vessel. Data values from four independent transmitters (separate vessel taps, instrument piping, etc.) are used for initiating ADS A, LPFL A & C, CAMS A (9.a), and for the isolation logic (9.c). Four additional transmitters are used to provide data values for initiating the Diesel Generators, the Reactor Building Cooling Water, ADS 0, CAMS B and LPFL B (9.b).

The Reactor Vessel Water Level – Low, Level 1 Allowable Value is high enough to allow sufficient time for the high pressure systems to be effective before the low pressure flooders initiate and provide adequate cooling.

Four divisions of the Reactor Vessel Water Level – Low, Level 1 Function are required to be OPERABLE to ensure that no single instrument failure will preclude a protective action from this Function on a valid signal.

The Reactor Vessel Water Level – Low, Level 1 Function is required to be OPERABLE in modes 1, 2, & 3. Functions 9.a and 9.b are also required to be OPERABLE in MODES 4 and 5 when the associated LPFL (A or C for 9.a, B for 9.b) are required to be OPERABLE to satisfy the requirement for OPERABLE ECCS pumps when RPV level is less than a specified value above the vessel flange. Refer to LCO 3.5.1, “ECCS-Operating” and LCO 3.5.2, “ECCS-Shutdown” for the Applicability Bases of the ADS & LPFL systems, LCO 3.8.1, “AC Sources – Operating”, 3.8.2, “AC Sources – Refueling” and 3.8.11, “AC Sources – Shutdown (Low Water Level)” for the Applicability Bases of the DGs and LCO 3.6.1.1, “Primary Containment” for the Applicability basis for isolation.

10. Main Steam Isolation Valve – Closure

MSIV closure results in loss of the main turbine and the condenser as a heat sink for the Nuclear Steam Supply System and indicates a need to shut down the reactor to reduce heat generation. Therefore, a reactor scram is initiated on a Main Steam Isolation Valve – Closure signal before the MSIVs are completely closed in anticipation of the complete loss of the normal heat sink and subsequent overpressurization transient. However, for the overpressurization protection analysis of Reference 8, the Average Power Range Monitor Fixed Neutron Flux – High Function,

BASES

APPLICABLE SAFETY ANALYSIS, LCO, and APPLICABILITY (continued)

along with the S/RVs, limits the peak RPV pressure to less than the ASME Code limits. That is, the direct scram on position switches for MSIV closure events is not assumed in the overpressurization analysis.

MSIV closure scram is assumed in the MSIV closure and outside containment Main Steam Line Break transients analyzed in Reference 2 (e.g., low steam line pressure, manual closure of MSIVs, high steam line flow). The reactor scram reduces the amount of energy to be absorbed and, along with the actions of the ECCS, ensures that the fuel peak cladding temperature remains below the limits of 10 CFR 50.46.

Each RPS/MSIV DTF directly receives valve closure data from both the outboard and inboard MSIVs on a single steamline. The closure signals originate from position switches mounted on each MSIV. The Main Steam Isolation Valve – Closure logic will cause a scram when the steam flow is shut off in two or more steam lines. One division (i.e., one steamline) of this function may be bypassed to permit operation with one steamline isolated.

The Main Steam Isolation Valve – Closure Allowable Value is specified to ensure that a scram occurs prior to a significant reduction in steam flow, thereby reducing the severity of the subsequent pressure transient. Note that the allowable value is not implemented in the initiation logic, but is part of the MSIV requirements and the MSIVs are part of the Nuclear Boiler System (NBS).

Four divisions of the Main Steam Isolation Valve – Closure Function are required to be OPERABLE to ensure that no single instrument failure will preclude the scram from this Function on a valid signal. This Function is only required in MODE 1 since, with the MSIVs open and the heat generation rate high, a pressurization transient can occur if the MSIVs close. In all other MODES the heat generation rate is low enough so that the other diverse RPS functions provide sufficient protection.

11.a., b., c., & d. Drywell Pressure – High

High pressure in the drywell could indicate a Reactor Coolant Pressure Boundary (RCPB) break or a Feedwater Line Break inside the drywell. Various protective actions are initiated to minimize the possibility of fuel damage, to reduce the amount of energy added to the coolant and the drywell, and to keep offsite dose within limits. The core cooling function of the ECCS, along with the scram action of the RPS, ensures that the fuel peak cladding temperature remains below the limits of 10 CFR 50.46.

BASES

APPLICABLE SAFETY ANALYSIS, LCO, and APPLICABILITY (continued)

The protective actions are:

- Reactor Scram (11.a). This function provides a scram signal that is diverse to the Reactor Vessel Water Level – Low, Level 3 Function for LOCA events inside the drywell. This scram initiation is not specifically credited in any ABWR safety analysis, but it is retained for the overall redundancy and diversity of the RPS as required by the NRC approved licensing basis.

- ECCS pumps (LPFL, HPCF, & RCIC) and the associated Diesel-Generators (DGs) (11.b). This function provides an ECCS initiation signal that is diverse to the low reactor water level initiations. ECCS initiation on this Function is not specifically credited in any ABWR safety analysis, but it is retained for overall redundancy and diversity as required by the NRC approved licensing basis.

- Automatic Depressurization System (ADS) (11.b). The Drywell Pressure – High Function is assumed to be OPERABLE and capable of initiating the ADS during the accidents analyzed in Reference 1.

- Containment Isolation (11.c). The isolation of some of the CIVs on high drywell pressure supports actions to ensure that offsite dose limits of 10 CFR 100 are not exceeded. The Drywell Pressure - High Function associated with isolation of the containment is implicitly assumed in the ABWR accident analysis as these leakage paths are assumed to be isolated post LOCA.

- ESF Initiation (11.b). Various ESF features that are initiated on this Function are SGTS, CAMS, RCW and RSW.

- Feedwater Line Break Mitigation Initiation (11.d). The feedwater line break mitigation feature is initiated on this function concurrent with a feedwater line break differential pressure – high (Function 15).

Each DTF receives a data value representing measured drywell pressure in its division and compares it against a numeric setpoint to determine if a trip is required. Drywell pressure is measured using four pressure transmitters connected to the drywell atmosphere. The Allowable Value was selected to be as low as possible and be indicative of a LOCA inside primary containment. Negative barometric fluctuations are accounted for in the Allowable Value.

BASES

APPLICABLE SAFETY ANALYSIS, LCO, and APPLICABILITY (continued)

Four divisions of Drywell Pressure – High Function are required to be OPERABLE to ensure that no single instrument failure will preclude protective action from this Function on a valid signal.

RPS Initiation (Function 11.a) is required to be OPERABLE in MODES 1 and 2 consistent with the applicability of the RPS in LCO 3.3.1.2, “RPS and MSIV Actuation”.

ESF, isolation, and feedwater line break mitigation initiation (Functions 11.b, 11.c, and 11.d) are required in MODES 1, 2, and 3 where considerable energy exists in the RCS, resulting in the limiting transients and accidents. In MODES 4 and 5, the Drywell Pressure – High Function is not required since there is insufficient energy in the reactor to pressurize the drywell to the Drywell Pressure – High setpoint.

12. CRD Water Header Charging Pressure - Low

The Control Rod Drives (CRD) use high pressure water that is stored in accumulators as the motive power for driving in the control rods. The accumulators are connected through suitable valve arrangements to a header which provides the high pressure water. If the header pressure is lower then some threshold value then the control rod insertion time may be greater then specified. Therefore, a low CRD water header charging pressure scram is provided. The CRD header pressure is indirectly assumed in any safety analysis where the scram time is a significant parameter.

Each RPS/MSIV DTF receives a measured CRD charging header pressure value and compares it against a numeric setpoint to determine if a trip is required. CRD charging header pressure is measured using four pressure transmitters connected to the header. The Allowable Value was selected to assure that the scram time will be equal to or less than the values used in various safety analysis with the reactor pressure at the highest value that occurs during the analyzed events.

The CRD charging header pressure trip may be manually bypassed from keylock switches in each division when the reactor is in the shutdown or refueling modes. Each division sends a rod withdrawal block to the Rod Control and Information System (RCIS) when the bypass is invoked in that division.

Four divisions of CRD Water Header Charging Pressure - Low are required to be OPERABLE to ensure that no single instrument failure will

BASES

APPLICABLE SAFETY ANALYSIS, LCO, and APPLICABILITY (continued)

preclude a scram from this Function on a valid signal. The Function is required to be OPERABLE in MODES 1 and 2 when the scram function is required and in MODE 5 with any control rod withdrawn from a core cell containing one or more fuel assemblies.

13. Turbine Stop Valve – Closure

Closure of the Turbine Stop Valves (TSV) results in the loss of the normal heat sink and causes reactor pressure, neutron flux, and heat flux transients that must be limited. Therefore, a reactor scram is initiated at the start of TSV closure in anticipation of the transients. The Turbine Stop Valve – Closure Function is the primary scram signal for the turbine trip, runout of all feedwater pumps, and pressure regulator upscale failure events analyzed in Reference 2. For these events, the reactor scram reduces the amount of energy to be absorbed and, along with the actions of the End of Cycle Recirculation Pump Trip (EOC-RPT), ensures that the MCPR SL is not exceeded.

Turbine Stop Valve – Closure signals are initiated by a position switch on each of the four stop valves. Each position switch sends a discrete signal directly to one of the four RPS/MSIV DTFs. The logic for the Turbine Stop Valve – Closure Function is such that a trip will occur when closure of two or more TSVs is detected.

This Function must be enabled at THERMAL POWER ≥ 40% RTP. This is normally accomplished automatically using the data from four independent pressure transmitters sensing turbine first stage pressure. Turbine first stage pressure data is received in each RPS DTF.

The Turbine Stop Valve – Closure Allowable Value is selected to be high enough to detect imminent TSV closure thereby reducing the severity of the subsequent pressure transient.

Four divisions of Turbine Stop Valve – Closure are required to be OPERABLE to ensure that no single instrument failure will preclude a scram from this Function. This Function is required, consistent with analysis assumptions, whenever THERMAL POWER is ≥ 40% RTP. The Reactor Vessel Steam Dome Pressure – High and the Average Power Range Monitor Fixed Neutron Flux – High Functions are adequate to maintain the necessary safety margins when power is less than 40% RTP.

BASES

APPLICABLE SAFETY ANALYSIS, LCO, and APPLICABILITY (continued)

14. Turbine Control Valve Fast Closure, Trip Oil Pressure - Low

Fast closure of the TCVs results in loss of the normal heat sink and causes reactor pressure, neutron flux, and heat flux transients that must be limited. Therefore, a reactor scram is initiated on TCV fast closure in anticipation of these transients. The Turbine Control Valve Fast Closure, Trip Oil Pressure – Low Function is the primary scram signal for the generator load rejection events analyzed in Reference 2. For this event, the reactor scram reduces the amount of energy to be absorbed and, along with the actions of the EOC-RPT System, ensures that the MCPR SL is not exceeded.

Turbine Control Valve Fast Closure, Trip Oil Pressure - Low signals are initiated from a pressure sensor on each of the four turbine control valve hydraulic mechanisms. The pressure sensor data associated with each control valve is transmitted directly to one of the four RPS/MSIV DTFs. This Function must be enabled at THERMAL POWER ≥ 40% RTP as described for the Turbine Stop Valve – Closure Function.

The Turbine Control Valve Fast Closure, Trip Oil Pressure – Low Allowable Value is selected high enough to detect imminent TCV fast closure.

Four divisions of Turbine Control Valve Fast Closure, Trip Oil Pressure – Low Function are required to be OPERABLE to ensure that no single instrument failure will preclude a scram from this Function on a valid signal. This Function is required, consistent with the analysis assumptions, whenever THERMAL POWER is ≥ 40% RTP. The Reactor Vessel Steam Done Pressure – High and the Average Power Range Monitor Fixed Neutron Flux – High Functions are adequate to maintain the necessary safety margins when power is less than 40% RTP.

15. Feedwater Line Differential Pressure

High feedwater line differential pressure could indicate a Feedwater Line Break inside the drywell. This function, concurrent with the drywell pressure- high Function (Function 11.d) provides a condensate pump trip signal to reduce the amount of energy added to the drywell. Feedwater line break mitigation initiation is not specifically credited in any ABWR safety analysis, but it is retained for overall redundancy and diversity as required by the NRC approved licensing basis.

BASES

APPLICABLE SAFETY ANALYSIS, LCO, and APPLICABILITY (continued)

Each DTF receives a data value representing measured drywell pressure and compares it against a numeric setpoint to determine if a trip is required. Feedwater line differential pressure is measured using four differential pressure transmitters connected to the feedwater lines. The Allowable Value was selected to be as low as possible and be indicative of a LOCA inside primary containment.

Four divisions of Feedwater Line Differential Pressure - High Function are required to be OPERABLE to ensure that no single instrument failure will preclude protective action from this Function on a valid signal.

Feedwater line break mitigation initiation is required to be OPERABLE in MODES 1, 2, and 3 where considerable energy exists in the RCS, resulting in the limiting transients and accidents.

16.a. & b. Suppression Pool Temperature - High

High temperature in the suppression pool could indicate a break in the reactor coolant system or a leak through the Safety/Relief Valves (S/RV), or a stuck open S/RV. A reactor scram (16.a) is initiated to reduce the amount of energy added to the containment. The Suppression Pool Temperature – High Function is assumed in the stuck open S/RV analysis of Reference 2.

High suppression pool temperature signals originate in four divisions of temperature sensors distributed throughout the suppression pool. The suppression pool temperature monitoring system in each of the four divisions calculates a bulk average temperature from the distributed sensors and compares it against a setpoint. The high temperature trip data from the suppression pool temperature monitoring system is connected to the RPS/MSIV DTF in the same division. The allowable value was selected considering the maximum normal suppression pool temperature and to indicate a stuck open S/RV.

This Function (16.b) also cause automatic initiation of the suppression pool cooling mode of the RHR systems.

Four channels of the Suppression Pool Temperature – High Function are required to be OPERABLE to provide confidence that no single failure will preclude protection action from this function on a valid signal. Function 16.a is required in MODES 1 and 2 where reactor power may be high enough to require plant scram to reduce the suppression pool heat load to within acceptable limits. Function 16.b is required to be OPERABLE in

BASES

APPLICABLE SAFETY ANALYSIS, LCO, and APPLICABILITY (continued)

MODES 1, 2, and 3 where considerable energy exists in the primary coolant.

17. Condensate Storage Tank Level – Low

The normal source of water for the RCIC and HPCF pumps is the Condensate Storage Tank (CST). Low level in the Condensate Storage Tank (CST) indicates the potential for an inadequate supply of makeup water. If the water level in the CST falls below a specified level, the suppression pool suction valve automatically opens, followed by automatic closure of the CST suction valve. This ensures that an adequate supply of makeup water is continuously available to the pumps. To prevent losing suction to the pump, the valves are interlocked so that the suppression pool suction valve must be open before the CST suction valve automatically closes. The Function is implicitly assumed in the accident and transient analyses which take credit for RCIC or HPCF since the analyses assume that the suction source is the suppression pool.

Each ESF DTF receives a data value representing measured condensate storage tank level in its division and compares it against a numeric setpoint to determine if a transfer is required. Condensate Storage Tank Level – Low signals originate from four level transmitters. The Condensate Storage Tank Level – Low Function Allowable Value is high enough to ensure adequate pump suction head while water is being taken from the CST.

Four channels of the Condensate Storage Tank Level – Low Function are required to be OPERABLE to provide confidence that no single failure will preclude a transfer of the suction source on a valid signal. The Function is required to be OPERABLE in MODE 1 and in MODES 2 and 3. This Function must also be OPERABLE in MODES 4 and 5 when HPCF is used to satisfy the requirement that at least 2 ECCS system be OPERABLE with RPV Level less than 23 feet above the vessel flange. The applicability basis is the same as given for RCIC and HPCF in LCO 3.5.1, “ECCS-Operating” and LCO 3.5.2, “ECCS-Shutdown”.

BASES

APPLICABLE SAFETY ANALYSIS, LCO, and APPLICABILITY (continued)

18. Suppression Pool Water Level – High

High suppression pool water level could result in the loads on the suppression pool exceeding design values should there be a blowdown of the reactor vessel pressure through the S/RVs. Therefore, high suppression pool water level is used to transfer the suction source of RCIC and HPCF from the Condensate Storage Tank (CST) to the suppression pool to eliminate the possibility of continuing to provide additional water from a source outside containment. To prevent losing suction to the pump, the suction valves are interlocked so that the suppression pool suction valve must be open before the CST suction valve automatically closes. This Function is implicitly assumed in the accident and transient analyses where suppression pool loading is based on an assumed maximum water level.

Each ESF DTF receives a data value representing measured suppression pool water level in its division and compares it against a numeric setpoint to determine if a transfer is required. Suppression Pool Water Level – High data originates in four level transmitters. The Allowable Value for the Suppression Pool Water Level – High Function is chosen to ensure that RCIC and HPCF will be aligned
for suction from the suppression pool before the water level reaches the point at which suppression pool design loads would be exceeded.

Four channels of the Suppression Pool Temperature – High Function are required to be OPERABLE to provide confidence that no single failure will preclude a transfer of the suction source on a valid signal. The Function is required to be OPERABLE in MODE 1 and in MODES 2 and 3. This Function must also be OPERABLE in MODES 4 and 5 when HPCF is used to satisfy the requirement that at least 2 ECCS system be OPERABLE with RPV Level less than 23 feet above the vessel flange. The applicability basis is the same as given for RCIC and HPCF in LCO 3.5.1, “ECCS-Operating” and LCO 3.5.2, “ECCS-Shutdown.”

19. Main Steam Line Pressure – Low

Low MSL pressure indicates that there may be a problem with the turbine pressure regulation, which could result in a low reactor vessel water level condition and the RPV cooling down more than 55°C/h if the pressure loss is allowed to continue. The Main Steam Line Pressure – Low Function is directly assumed in the analysis of the pressure regulator upscale failure (Ref. 2). For this event, the closure of the MSIVs ensures that the RPV temperature change limit (55°C/h) is not reached. In addition, this Function supports actions to ensure that Safety Limit 2.1.1.1

BASES

APPLICABLE SAFETY ANALYSIS, LCO, and APPLICABILITY (continued)

is not exceeded. (This Function closes the MSIVs prior to pressure decreasing below 5.41 MPaG, which results in a scram due to MSIV closure, thus reducing reactor power to < 25% RTP.)

The MSL low pressure data originates in four transmitters that are connected to the MSL header. The transmitters are arranged such that, even though physically separated from each other, each transmitter is able to detect low MSL pressure. The pressure transmitter signals are digitized and transmitted to the RPS/MSIV DTFs.

Four channels of Main Steam Line Pressure – Low Function are required to be OPERABLE to ensure that no single instrument failure can preclude the isolation function or cause a spurious isolation.

The Allowable Value was selected to be high enough to prevent excessive RPV depressurization.

The Main Steam Line Pressure – Low Function is required to be OPERABLE in MODE 1 since this is when the assumed transient can occur. The Function is automatically bypassed when the reactor mode switch is not in the RUN position.

20. Main Steam Line Flow – High

Main Steam Line Flow – High is provided to detect a break of the MSL and initiate closure of the MSIVs. If the steam were allowed to continue flowing out of the break, the reactor would depressurize and the core could uncover. If the RPV water level decreases too far, fuel damage could occur. Therefore, an isolation is initiated on high MSL flow to prevent core damage. The Main Steam Line Flow - High Function is directly assumed in the analysis of the main stream line break (MSLB) accident (Ref. 1 and 2). The isolation action, along with the scram function of the RPS, ensures that the fuel peak cladding temperature remains below the limits of 10 CFR 50.46 and offsite doses do not exceed the 10 CFR 100 limits.

The MSL flow data originates in 16 transmitters that are connected to the four MSLs. The transmitters are arranged such that, even though physically separated from each other, all four connected to one steam line can detect high flow. The flow transmitter signals are digitized and transmitted to the RPS/MSIV DTFs.

BASES

APPLICABLE SAFETY ANALYSIS, LCO, and APPLICABILITY (continued)

Four channels per Steam line of Main Steam Line Flow – High Function for each unisolated MSL are required to be OPERABLE so that no single instrument failure will preclude detecting a break in any individual MSL or cause a spurious isolation.

The Allowable Value is chosen to ensure that offsite dose limits are not exceeded due to the break. This Function is required to be OPERABLE in MODES 1, 2, and 3 consistent with the Applicability for LCO 3.6.1.1, "Primary Containment."

21. Condenser Vacuum - Low

The Condenser Vacuum - Low Function is provided to prevent overpressurization of the main condenser in the event of a loss of the main condenser vacuum. Since the integrity of the condenser is assumed in offsite dose calculations, the Condenser Vacuum – Low Function is implicitly assumed to be OPERABLE and capable of initiating closure of the MSIVs. The closure of the MSIVs is initiated to prevent the addition of steam that would lead to additional condenser pressurization and possible rupture of the diaphragm installed to protect the turbine exhaust hood, thereby preventing a potential radiation leakage path.

Condenser vacuum pressure data originates in four pressure transmitters that sense the pressure in the condenser. The pressure transmitter signals are digitized and transmitted to the RPS/MSIV DTFs.

Four channel s of Condenser Vacuum – Low Function are required to be OPERABLE to ensure no single instrument failure can preclude isolation or cause a spurious isolation.

The Allowable Value is chosen to prevent damage to the condenser due to pressurization, thereby ensuring its integrity for offsite dose analysis. This Function is required to be OPERABLE in MODE 1, consistent with LCO 3.6.1.1, "Primary Containment." However, as noted in a footnote to Table 3.3.1.1-1, the Function is required to be OPERABLE in MODES 1, 2, and 3 only when one or more TSVs are not fully closed, since the potential for condenser overpressurization is minimized. Operator controls are provided to manually bypass the Function. Bypass is automatically prohibited unless all TSVs are closed, the reactor mode switch is not in run, and reactor pressure is low.

BASES

APPLICABLE SAFETY ANALYSIS, LCO, and APPLICABILITY (continued)

22. Main Steam Tunnel Temperature – High

Main Steam Tunnel Temperature – High is provided to detect a leak in the RCPB and is diverse to the Main Steam Line Flow – High Function. This Function is capable of detecting a very small leak. If the small leak is allowed to continue without isolation, offsite dose limits may be reached. Therefore, an MSIV closure and CUW isolation are initiated on this Function to limit offsite releases. Credit for this Function is not assumed in any transient or accident analysis, since bounding analyses are performed for large breaks such as MSLBs. However, the function is retained for the overall redundancy and diversity as required by the NRC approved licensing basis.

Main steam tunnel temperature data originates in four temperature transmitters located in the area being monitored. The temperature signals are digitized and transmitted to the RPS/MSIV and ESF DTFs.

Four channel divisions of Main Steam Tunnel Temperature - High Function are required to be OPERABLE to ensure that no single instrument failure can preclude isolation initiation or cause a spurious isolation.

The Main Steam Tunnel Temperature – High Allowable Value is chosen to detect a leak equivalent to 95 L/min. This Function is required to be OPERABLE in MODES 1, 2, and 3 consistent with the Applicability for LCO 3.6.1.1, “Primary Containment.”

23. Main Turbine Area Temperature – High

Main turbine area temperature measurements are provided to detect a leak from the associated steam piping. This Function is capable of detecting a very small leak and is diverse to the Main Steam Line Flow – High Function. If the small leak is allowed to continue without isolation, offsite dose limits may be reached. These Functions are not assumed in any ABWR transient or accident analysis, since bounding analyses are performed for large breaks.

BASES

APPLICABLE SAFETY ANALYSIS, LCO, and APPLICABILITY (continued)

Main turbine area temperature data originates in four temperature transmitters that are appropriately located to detect potential leaks in the main steam lines. The temperature transmitter data is digitized and transmitted to the RPS/MSIV DTFs in each division. Four channels of the Main Turbine Area Temperature – High Function are required to be OPERABLE to ensure that no single instrument failure can preclude isolation initiation or cause a spurious isolation.

The Allowable Values are set low enough to detect a leak equivalent to 1.58×10^{-3} m^3/s. This Function is required to be OPERABLE in MODES 1, 2, and 3 consistent with the Applicability for LCO 3.6.1.1, "Primary Containment."

24a. & 24b. Reactor Building Area/Fuel Handling Area, Exhaust Air Radiation – High

High ventilation exhaust radiation is an indication of possible gross failure of the fuel cladding. The release may have originated from the containment due to a break in the RCPB or from the refueling floor due to a refueling accident. When Exhaust Air Radiation – High is detected, valves whose penetrations communicate with the containment atmosphere are isolated to limit the release of fission products. The SGTS is also automatically initiated on these Functions to assure adequate fission product removal capacity. Additionally, this Function is assumed to initiate isolation of the containment during a fuel handling accident (Ref. 2).

The Exhaust Air Radiation – High signals are initiated from radiation detectors that are located on the ventilation exhaust ducts coming from the monitored areas. There are four radiation detectors in each area which are connected to the four independent PRRM divisions. Trip signals from the PRRM divisions are sent to the ESF DTFs in the same division.

Four channels of Exhaust Air Radiation – High are required to be OPERABLE to ensure that no single instrument failure can preclude the isolation function or cause a spurious isolation.

The Allowable Values are chosen to promptly detect gross failure of the fuel cladding and to ensure offsite doses remain below 10 CFR 20 and 10 CFR 100 limits.

BASES

APPLICABLE SAFETY ANALYSIS, LCO, and APPLICABILITY (continued)

This function is required to be OPERABLE in MODES 1, 2, & 3. In addition the Function is required to be OPERABLE during CORE ALTERATIONS, operations with a potential for draining the reactor vessel (OPDRVs), and movement of irradiated fuel assemblies in the containment because the capability of detecting radiation releases due to fuel failures (due to fuel uncovery or dropped fuel assemblies) must be provided to ensure offsite dose limits are not exceeded.

25. RCIC Steam Line Flow – High

The RCIC Steam Line Flow – High Function is provided to detect a break of the RCIC steam lines and initiate closure of the RCIC steam line isolation valves. If the steam is allowed to continue flowing out of the break, the reactor will depressurize and core uncovery can occur. Therefore, the isolation is initiated on high flow to prevent core damage. Specific credit for this Function is not assumed in any ABWR accident analyses since the bounding analysis is performed for large breaks such as MSL breaks. However, these instruments prevent the RCIC steam line break from becoming bounding.

The RCIC Steam Line Flow – High data originates in four transmitters that are connected to the RCIC steam lines. The transmitter signals are digitized and transmitted to the ESF DTFs.

Four channels of the RCIC Steam Line Flow – High Function are required to be OPERABLE to ensure that no single instrument failure can preclude isolation initiation or cause a spurious isolation.

The Allowable Value is chosen to be low enough to ensure that the trip occurs to prevent fuel damage and maintains the MSLB event as the bounding event. This Function is required to be OPERABLE in MODES 1, 2, and 3 consistent with the Applicability for LCO 3.6.1.1, “Primary Containment.”

26. RCIC Steam Supply Line Pressure-Low

Low RCIC steam supply line pressure indicates that the pressure of the steam in the RCIC turbine may be too low to continue operation of the turbine. This isolation is for equipment protection and is not assumed in any transient or accident analysis for the ABWR. However, it also provides a diverse signal to indicate a possible system break. These instruments are included in the Technical Specifications (TS) because of the potential for risk due to possible failure of the instruments preventing RCIC initiations.

BASES

APPLICABLE SAFETY ANALYSIS, LCO, and APPLICABILITY (continued)

The RCIC Steam Supply Line Pressure - Low data originates in four pressure transmitters that are connected to the system steam line. The transmitter signals are digitized and transmitted to the ESF DTFs.

Four channels of the RCIC Steam Supply Line Pressure - Low Function are required to be OPERABLE to ensure that no single instrument failure can preclude isolation initiation or cause a spurious isolation.

The Allowable Value is selected to be high enough to prevent damage to the system's turbines. This Function is required to be OPERABLE in MODES 1, 2, and 3 consistent with the Applicability for LCO 3.6.1.1, "Primary Containment."

27. RCIC Equipment Area Temperature – High

RCIC equipment area temperatures are provided to detect a leak from the associated system steam piping. This Function is capable of detecting a very small leak and is diverse to the high flow Function. If the small leak is allowed to continue without isolation, offsite dose limits may be reached. These Functions are not assumed in any ABWR transient or accident analysis, since bounding analyses are performed for large breaks such as MSL breaks.

RCIC equipment area temperature data originates in temperature transmitters that are appropriately located to detect potential leaks in RCIC steam lines. The temperature transmitter data is digitized and transmitted to the ESF DTFs.

Four channels of the RCIC Equipment Area Temperature – High Function are required to be OPERABLE to ensure that no single instrument failure can preclude the isolation function or cause a spurious isolation.

The Allowable Values are set low enough to detect a leak equivalent to $1.58 \times I0^{-3}$ m^3/s. This Function is required to be OPERABLE in MODES 1, 2, and 3 consistent with the Applicability for LCO 3.6.1.1, “Primary Containment.”

BASES

APPLICABLE SAFETY ANALYSIS, LCO, and APPLICABILITY (continued)

28. RHR Area Temperature – High

RHR Area Temperature – High is provided to detect a leak from the associated system steam piping when the RHR is in the shutdown cooling mode. This Function is capable of detecting a very small leak. If the small leak is allowed to continue without isolation, offsite dose limits may be reached. These Functions are not assumed in any ABWR transient or accident analysis, since bounding analyses are performed for large breaks such as MSLBs.

RHR Area Temperature – High data originates in temperature transmitters that are appropriately located to detect leaks in RHR equipment. Four instruments monitor each of the three RHR areas. The temperature transmitter outputs are digitized and transmitted to the ESF DTFs.

Four channels of RHR Area Temperature – High Function are required to be OPERABLE to ensure that no single instrument failure can preclude isolation initiation or cause a spurious isolation.

This Function is only required to be OPERABLE in MODES 2 and 3 since these are the modes where the shutdown cooling mode of the RHR is used. The Allowable Values are set low enough to detect a leak equivalent to 95 L/min.

29. CUW Differential Flow – High

The high differential flow signal is provided to detect a break in the CUW System. This will detect leaks in the CUW System when area temperature would not provide detection (i.e., a cold leg break). Should the reactor coolant continue to flow out of the break, offsite dose limits may be exceeded. Therefore, isolation of the CUW System is initiated when high differential flow is sensed to prevent exceeding offsite doses. This Function is not assumed in any ABWR transient or accident analysis, since bounding analyses are performed for large breaks such as MSLBs.

Differential mass flow is calculated in the DTF in each ESF division as the sum of the return and blowdown flows subtracted from the suction flow. In order to avoid spurious trips due to transient flow conditions, the flow mismatch must persist for a specified time period before a trip is declared.

BASES

APPLICABLE SAFETY ANALYSIS, LCO, and APPLICABILITY (continued)

The mass flow value for each of the three flows is calculated from differential pressure and temperature data associated with each of the flows. The data for the differential mass flow calculation originates in three differential pressure transmitters and three temperature transmitters in each division (total of 12 each type). The sensors are arranged to maintain adequate divisional separation while providing a representative measurement of flow and temperature in the three flow paths. The differential pressure transmitter and temperature transmitter data is digitized and transmitted to the ESF DTFs. If the calculated flow difference is too large, each DTF generates an isolation signal.

Four channels of the CUW Differential Flow – High Function are required to be OPERABLE to ensure that no single instrument failure can preclude the isolation function or cause a spurious isolation. Three differential pressure SENSOR CHANNELS and three temperature SENSOR CHANNELS must be OPERABLE in a division in order for the Function to be OPERABLE in the division. Therefore, a failure in any one of the six sensors in a division will result in the Function being declared inoperable in the division.

The CUW Differential Flow – High Allowable Value ensures that the break of the CUW piping is detected. The Allowable Value of the persistence time is selected to ensure that the MSLB outside containment remains the limiting break in the ABWR safety analysis for offsite dose calculations. This Function is required to be OPERABLE in MODES 1, 2, and 3 consistent with the Applicability for LCO 3.6.1.1, “Primary Containment.”

<u>30, 31, & 32, CUW Area Temperatures – High</u>

Ambient and Differential CUW Area Temperature – High Functions are provided to detect leaks in the CUW System. These Functions are capable of detecting very small leaks and - for the hot portions of the CUW system - are diverse to the high differential flow instrumentation. If the small leak continues without isolation, offsite dose limits may be reached. Credit for these Functions is not taken in any transient or accident analysis for the ABWR, since bounding analyses are performed for large breaks such as MSLBs. However, the function is retained for the overall redundancy and diversity as required by the NRC approved licensing basis.

BASES

APPLICABLE SAFETY ANALYSIS, LCO, and APPLICABILITY (continued)

CUW area temperature data originates in temperature elements that are located in the room that is being monitored. There are twelve temperature transmitters that provide input to the CUW Area Temperature – High Functions (four per area). The temperature data is digitized and transmitted to the DTFs. Four channels are required to be OPERABLE to ensure that no single instrument failure can preclude isolation initiation or cause a spurious isolation.

The CUW Area Temperature – High Allowable Values are set low enough to detect a leak equivalent to 1.58×10^{-3} m^3/s. This Function is required to be OPERABLE in MODES 1, 2, and 3 consistent with the Applicability for LCO 3.6.1.1, "Primary Containment."

33. RCW/RSW Heat Exchanger Room Water Level – High

The Control Building RCW/RSW heat exchanger room water level instrumentation is provided to prevent potential flooding of the Control Building due to breaks in the Reactor Service Water System (RSW) piping in the Control Building. Flood protection is accomplished by automatic closure of certain RSW valves and tripping of RSW pumps. These water level data originate in water level sensing elements that are located in the heat exchanger rooms that are being monitored. There are four water level transmitters that provide input to the RCW/RSW Heat Exchanger Room Water Level – High Function per RCW/RSW division. The water level data is digitized and transmitted to the DTFs. Four channels are required to be OPERABLE per RCW/RSW division to ensure that no single instrument failure can preclude protective action initiation or cause a protective action initiation. Figure B 3.3.1.1-2 illustrates the arrangement of level sensor inputs to SSLC.

The RCW/RSW Heat Exchanger Room Water Level – High Allowable Values are set low enough to detect a break of the RSW piping. This Function is required to be OPERABLE whenever the RSW pumps are required to be OPERABLE or in operation.

BASES

ACTIONS

A Note has been provided to modify the ACTIONS related to SSLC instrumentation channels. Section 1.3, Completion Times, specifies that once a Condition has been entered, subsequent trains, subsystems, components, or variables expressed in the Condition, discovered to be inoperable or not within limits, will not result in separate entry into the Condition. Section 1.3 also specifies that Required Actions of the Condition continue to apply for each additional failure, with Completion Times based on initial entry into the Condition. However, the Required Actions for inoperable SSLC instrumentation provide appropriate compensatory measures for multiple inoperable channels. As such, a Note has been provided that allows separate Condition entry for each inoperable SSLC instrumentation channel.

Note that some of the conditions have placing a channel in trip as an allowable action. This causes the initiation logic to become 1 out of 3 which provides adequate plant protection but increases the vulnerability to spurious initiations. This action should be used with caution on Functions that initiate SLC (3 and 7) because a spurious SLC actuation could cause a delay in plant restart.

A.1, A.2.1.1, A.2.1.2, A.2.2.1 and A.2.2.2

A SENSOR CHANNEL is considered to be OPERABLE when all components or devices required to provide the results of a trip calculation to the LOGIC CHANNELS that use the data from the channel are OPERABLE. If any LOGIC CHANNEL that uses the trip data from a SENSOR CHANNEL does not receive valid data then the channel is considered to be inoperable.

Since each Function has four SENSOR CHANNELS, a failure in one SENSOR CHANNEL will cause the initiation logic to become 1/3 or 2/3 depending on the nature of the failure (i.e. failure which causes a channel trip vs. a failure which does not cause a channel trip). Therefore, an additional single failure will not result in loss of protection but could cause a spurious initiation of a protective action for additional failures that result in a tripped condition.

BASES

ACTIONS (continued)

Action A.1 forces a trip condition in the inoperable SENSOR CHANNEL which causes the initiation logic to become 1/3 for the specific Functions that are placed in trip. In this condition a single failure will not result in loss of protection. This Action is applicable when more than one Function has a single inoperable SENSOR CHANNEL without regard to the divisions containing the failed channels. In this condition, the availability of the Function to provide a plant protective action is at least equivalent to the 2/4 trip logic. Since plant protection capability is within the design basis no further action is required when the inoperable SENSOR CHANNEL is placed in trip.

Action A.2.1.1 bypasses all SENSOR CHANNELS, except the NMS, in the affected division. This causes the trip logic in all LOGIC CHANNELS, except NMS, to become 2/3 so a single failure will not result in loss of protection or cause a spurious initiation. However, the degree of redundancy is reduced. As indicated by the note, this action is not applicable to the NMS Functions. This action may be implemented for single SENSOR CHANNEL failures in multiple Functions only when all failures are in the same division.

Action A.2.1.2 is similar to Action A.2.1.1 but applies only to the NMS Functions as indicated by the note. The trip logic in all NMS divisions then becomes 2/3 for all NMS SENSOR CHANNEL functions, and remains as 2/4 for all remaining SENSOR CHANNEL functions. In this condition a single failure will not result in loss of protection or cause a spurious initiation.

The APRM portion of the NMS is bypassed or tripped on a division basis. The SRNM, however, is bypassed or tripped by tripping or bypassing the individual SENSOR CHANNELS. Bypass must be accomplished using the three SRNM bypass switches as described in B3.3.2.1, “SRNM Instrumentation.” This arrangement also prevents bypassing all Division II sensors; therefore, failure of all Division II sensors requires taking the trip action. For the SRNM, any inoperable SENSOR CHANNEL must be bypassed even if the associated SSLC SRNM division remains OPERABLE. The requirement for the individual SRNM channel bypass is controlled by LCO 3.3.2.1, “SRNM Instrumentation”.

The Completion Time of six hours for implementing Actions A.1, A.2.1.1, and A.2.1.2 is based on providing sufficient time for the operator to determine which of the actions is appropriate. The Completion Time is acceptable because the probability of an event requiring the Function coupled with a failure in another SENSOR CHANNEL of the same Function occurring within that time period is low.

BASES

ACTIONS (continued)

Action A.2.2.1 restores all required SENSOR CHANNELS for the Function to the OPERABLE status following completion of Action A.2.1.1 or A.2.1.2. Action A.2.2.2 provides an alternate to A.2.2.1. Both of these Actions place the SSLC within the SSLC availability design basis. Implementing Actions A.2.1.1 or A.2.1.2 provides confidence that plant protection is maintained given an additional single failure and the SSLC self-tests will detect most failures, so operation in this condition for 30 days is acceptable. Also, the PRA analysis has shown that the change in core damage frequency is negligible with three instead of four OPERABLE divisions of sensors.

Note 1 for Action A.2.2.2 requires that the bypass implemented per Action A.2.1.1 or A.2.1.2 be removed after implementing Action A.2.2.2. This is necessary to restore the SSLC to within its availability design basis. Note 2 is included to permit a division of sensors or NMS division bypass for a limited period to permit repairs. Note 3 is included to permit placing a division in division of sensors bypass even if the division contains SENSOR CHANNELS that were tripped due to previous entries into the condition. Placing a division in division of sensor bypass masks any SENSOR CHANNEL manual trips in the division. This configuration is acceptable for the period of time that a division of sensor bypass is permitted under other actions of Condition A.

B.1, B.2.1, B.2.2, and B.3

Condition B occurs when two SENSOR CHANNELS for the same Function become inoperable. In this condition the initiation logic could be 2/2 so a single failure would cause loss of initiation from the Function.

Placing one of the failed SENSOR CHANNELS in trip (Action B.1) causes the trip logic to become 1/2 so a failure in an additional SENSOR CHANNEL for the function will not prevent initiation of a protective action from the Function. The three hour Completion time for this Action provides sufficient time for the operator to implement the Action. Operation for this amount of time does not contribute significantly to plant risk because the probability of an event requiring the Function, coupled with an undetected Failure in one of the remaining channels for the Function, within the time period is quite low.

Action B.2.1 requires placing the division containing the second failed SENSOR CHANNEL in division of sensors bypass for those Functions given in the note. Action B.2.2 requires a similar action for inoperable

BASES

ACTIONS (continued)

NMS channels. Performing these actions will prevent a change in status of the inoperable channel from causing a spurious initiation of a protective action. A Completion Time of 6 hours is permitted for these actions. The probability of the failed channel causing a spurious initiation during this time period is quite low.

Action B.3 restores at least one of the failed channels to OPERABLE status. A Completion Time of 30 days is permitted for this Action. The Completion Time is based on the low probability of an undetected failure in both of the OPERABLE channels for the Function occurring in that time period. The self diagnostic features of the SSLC, NMS, and ECF provide a high degree of confidence that no undetected failures will occur in the allowable Completion Time.

C.1 and C.2

This condition applies when three SENSOR CHANNELS for the same Function become inoperable. This Condition represents a case where automatic protective action from a Function is 1/1 (one of the channels fails in a tripped state) or is completely unavailable.

Action C.1 causes the initiation logic to become 1/1 so a protective Action from the Function is still available but the single failure criteria for automatic actuation is not met. However, other diverse trip parameters are available, including manual initiation.

Action C.2 causes restoration of a second channel for the Function so the initiation logic becomes 1/2 and plant protection is maintained for a single additional failure. The six hour Completion Time for C.2 provides a reasonable amount of time to effect repairs on at least one of the inoperable channels and avoid the risks associated with plant shutdown.

D.1 and D.2

This Condition applies when all of the SENSOR CHANNELs for the same Function become inoperable. This Condition represents a case where automatic protective action from a Function is completely unavailable. However, other diverse trip parameters are available, including manual initiation.

Although Action D.1 does not restore the initiation capability from the Function it is required so that the logic will become 1/1 when Action D.2 is completed.

BASES

ACTIONS (continued)

Action D.2 causes restoration of at least one channel for the Function which causes the initiation logic to become 1/1 so protective action for the Function is restored. The one hour Completion Time for D.2 provides some amount of time to effect repairs on at least one of the inoperable channels and avoid the risks associated with plant shutdown. Plant operation in this condition for the specified time does not contribute significantly to plant risk because the probability of an event requiring the Function within the Completion Time is low.

E.1

Required Action E.1 directs entry into the appropriate Condition referenced in Table 3.3.1.1-1 if the Required Action and associated Completion Times of Conditions A, B, C, or D are not met. The applicable Condition specified in the Table is Function and MODE or other specified condition dependent and may change as the Required Action of a previous Condition is completed. Each time the entry condition is met, Condition E will be entered for that channel/division and provides for transfer to the appropriate subsequent Condition.

F.1, G. 1, H.1, and J.1

If the Required Action for Conditions A, B, C, or D are not met within the specified Completion Times, the plant must be placed in a MODE or other specified condition in which the LCO does not apply. The Completion Times are reasonable, based on operating experience, to reach the specified condition from full power conditions in an orderly manner and without challenging plant systems. In addition, the Completion Time of Required Action F.1 is consistent with the Completion Time provided in LCO 3.2.2, “MINIMUM CRITICAL POWER RATIO (MCPR).”

I.1

If the Required Action for Conditions A, B, C, or D are not met within the specified Completion Times, the plant must be placed in a condition in which the LCO does not apply. This is done by immediately initiating action to insert all insertable control rods in core cells containing one or more fuel assemblies. Control rods in core cells containing no fuel assemblies do not affect the reactivity of the core and are, therefore, not required to be inserted. Action must continue until all insertable control rods in core cells containing one or more fuel assemblies are fully inserted.

BASES

ACTIONS (continued)

K.1

This Action applies when the Required Actions and associated Completion Times for Conditions A, B, C, or D are not met for Functions used to isolate specific flow paths.

If the Function is not restored to OPERABLE status or placed in trip within the allowed Completion Time, plant operation may continue if the affected penetration flow path(s) is isolated. Isolating the affected penetration flow path(s) accomplishes the safety action of the inoperable function.

For some of the Functions, the affected penetration flow path(s) may be considered isolated by isolating only that portion of the system in the associated room monitored by the inoperable Function.

The Completion Time is acceptable because it minimizes risk while allowing sufficient time for plant operations personnel to isolate the affected penetration flow path(s).

L.1, L.2.1, L.2.2, and L.2.3

This Action applies when the Required Actions of Conditions A, B, C, or D are not met within the specified Completion Times for those isolation Functions that have the conditions of applicability given in footnotes (f) or (g) of Table 3.3.1.1-1.

If the Function is not restored to OPERABLE status or placed in trip within the allowed Completion Time, the associated penetration flow path(s) may be isolated (Required Action L.1). Isolating the affected penetration flow path(s) accomplishes the safety action of the inoperable Function.

Alternately, the plant must be placed in a condition in which the LCO does not apply. If applicable, CORE ALTERATIONS and movement of irradiated fuel assemblies must be immediately suspended. Suspension of these activities shall not preclude completion of movement of a component to a safe condition. Also, if applicable, action must be immediately initiated to suspend OPDRVs to minimize the probability of a vessel drain down and subsequent potential for fission production release. Actions must continue until OPDRVs are suspended.

As noted, Action L.2.2 applies only to Function 24 since this is the only function required while moving fuel assemblies in the containment.

BASES

ACTIONS (continued)

M.1

This Required Action is intended to ensure that appropriate actions are taken if multiple, inoperable, untripped SENSOR CHANNELs for the same Function results in a complete loss of automatic transfer of the suction from the condensate storage tank to suppression pool for the HPCF and RCIC. Automatic transfer capability is considered to be lost if the Required Actions applicable to Functions 17 and 18 are not met within the allowable Completion Time for Conditions A, B, C, or D.

As noted, the Required Action is only applicable if the HPCF or RCIC pump suction is not aligned to the suppression pool, since, if aligned, the Required Action is already performed.

If the inoperable channel cannot be restored to OPERABLE status within the allowable out of service time in Actions A, B, C or D, the suction source must be aligned to the suppression pool which performs the intended function of the channel (shifting the suction source to the suppression pool). The Completion Time provides sufficient time to perform the operation which will allow operation to continue. Measures must be taken to ensure that the HPCF and RCIC System piping remains filled with water while the suction is aligned to the suppression pool.

N.1

Required Action N.1 is intended to ensure that appropriate actions are taken for multiple failures in devices that affect one or more of the available ECCS systems. The affected Functions are those Functions that effect either the low pressures systems only or the high pressure systems only. The inoperable SENSOR CHANNELS for the Functions covered by this action may result in loss of automatic initiation capability for the associated feature(s). In this situation, the feature(s) associated with the inoperable channels must be declared inoperable within 1 hour. The Completion Time is based on providing a reasonable amount of time to establish which features are associated with the inoperable Function.

Declaring the supported features inoperable will cause entry into the LCO that is appropriate for the inoperable Feature and suitable compensatory measurements taken.

BASES

ACTIONS (continued)

O.1

If Required Action M is not completed within its specified Completion Time, the associated feature(s) may be incapable of performing the intended function so the supported feature(s) associated with the inoperable untripped channels must be declared inoperable immediately.

P.1, P.2, R.1, and R.2

These Actions apply when the Required Actions of Conditions A, B, C, or D are not met within the specified Completion Times for ECCS initiation Functions that are used by all ECCS systems and when the Required Action of Condition K is not met within the specified Completion Time.

If the Function is not restored to OPERABLE status or placed in trip within the allowed Completion Time, or if the affected penetration flow path(s) are not isolated within the allowed Completion Time, the plant must be placed in a MODE or other specified condition where the LCO does not apply. This is done by placing the plant in at least MODE 3 within 12 hours and in MODE 4 within 36 hours. The Completion Times are reasonable, based on operating experience, to reach the required plant conditions from full power in an orderly manner and without challenging plant systems.

Q.1, Q.2.1, and Q.2.2

These Actions apply when the Required Actions of Conditions A, B, C, or D are not implemented within the specified Completion Times for isolation initiation Functions that are used to isolate several flow paths.

If the Function is not restored to OPERABLE status or placed in trip within the allowed Completion Time, the plant must be placed in a MODE or other specified condition in which the LCO does not apply. This is done by isolating the associated penetration flow paths or by placing the plant in MODE 4.

Note that MSIV closures Functions are covered by this ACTION to permit closure of the MSIVs should the Condition occur while in MODE 3.

The allowed Completion Time of 12 hours for Action Q.1 is reasonable to permit the operator to identify the affected flow paths and isolate them. The Completion Times for Actions Q.2.1 and Q.2.2 are reasonable, based on operating experience, to achieve the specified conditions in an orderly manner and without challenging plant systems.

BASES

SURVEILLANCE REQUIREMENTS

As noted at the beginning of the SRs, the SRs for each SSLC Sensor instrumentation Function are located in the SRs column of Table 3.3.1.1-1.

SR 3.3.1.1.1

Performance of the SENSOR CHANNEL CHECK provides confidence that a gross failure of a device in a SENSOR CHANNEL has not occurred. A SENSOR CHANNEL CHECK is a comparison of the parameter indicated in one SENSOR CHANNEL to a similar parameter in a different SENSOR CHANNEL. It is based on the assumption that SENSOR CHANNELs monitoring the same parameter should read approximately the same value. Significant deviations between the channels could be an indication of excessive instrument drift in one of the channels or other channel faults. A SENSOR CHANNEL CHECK will detect gross channel failure; thus, it is key to verifying the instrumentation continues to operate properly between each DIVISION FUNCTIONAL TEST.

Agreement criteria are determined by the plant staff based on a combination of the channel instrument and parameter indication uncertainties.

The high reliability of each channel provides confidence that a channel failure will be rare. In addition, the continuous self-tests provide confidence that failures will be automatically detected. However, a frequent surveillance interval of 12 hours is used to provide confidence that gross failures which do not activate an annunciator or alarm will be detected within 12 hours. The SENSOR CHANNEL CHECK supplements less formal, but more frequent, checks of channels during normal operational use of the displays associated with the channels required by the LCO.

SR 3.3.1.1.2

To ensure that the APRMs are accurately indicating the true core average power, the APRMs are calibrated to the reactor power calculated from a heat balance. The Frequency of once per 7 days is based on minor changes in LPRM sensitivity, which could affect the APRM reading between LPRM calibrations (SR 3.3.1.1.7).

BASES

SURVEILLANCE REQUIREMENTS (continued)

A Note is provided that imposes the SR only when power is ≥ 25% RTP because it is difficult to accurately determine core THERMAL POWER from a heat balance when THERMAL POWER is < 25% RTP. At low power levels, a high degree of accuracy is unnecessary because of the large inherent margin to thermal limits (MCPR and APLHGR). At ≥ 25% RTP, the Surveillance is required to have been satisfactorily performed within the last 7 days in accordance with SR 3.0.2.

SR 3.3.1.1.3

A DIVISION FUNCTIONAL TEST is performed on the SRNM and APRM-High/Setdown channels in each division to provide confidence that the function will perform as intended.

If the as found trip point is not within its required Allowable Value, the plant specific setpoint methodology may be revised, as appropriate, if the history and all other pertinent information indicate a need for the revision. The as-left setpoint shall be consistent with the assumptions of the current plant specific setpoint methodology.

As noted, this SR is not required to be performed prior to entering MODE 2 from MODE 1 since testing of the MODE 2 required SRNM and APRM Functions cannot be performed in MODE 1. This allows entry into MODE 2 if the surveillance Frequency is not met per SR 3.0.2. In this

event, the SR must be performed within 12 hours after entering MODE 2 from MODE 1. Twelve hours is based on the specified high reliability of these Functions and providing a reasonable time in which to complete the SR.

The devices that are used to implement the SRNM-High and APRM-High/Setdown Functions are specified to be highly reliable and low drift. The self-test features provide confidence that most failures will be automatically detected. However, a relatively short surveillance interval of 7 days is used because of the limited diversity of Functions available for the plant conditions where these Functions are used.

BASES

SURVEILLANCE REQUIREMENTS (continued)

SR 3.3.1.1.4

A DIVISION FUNCTIONAL TEST is performed on the SRNM Functions that are required in MODE 5 to provide confidence that the Functions will perform as intended.

The 31 day frequency is based on the specified high reliability and low drift of the devices that are used to implement the SRNM-High and APRM-High Functions. In addition, the self-test features of the NMS provide confidence that most failures that occur between surveillances will be automatically detected. The diversity of Functions provided (including manual scram), coupled with the SENSOR CHANNEL CHECKS provide confidence that this frequency is adequate.

SR 3.3.1.1.5 and SR 3.3.1.1.6

A DIVISIONAL FUNCTIONAL TEST or CHANNEL FUNCTIONAL TEST is performed on the required Functions or channels in each division to provide confidence that the Functions will perform as intended. The test is performed by replacing the process signal with a test signal as far upstream in the instrument channel as possible within the constraints of the instrumentation design and the need to perform the surveillance without disrupting plant operations. The testing may be performed so that multiple uses of a parameter may be tested at one time.

If the as found trip point is not within its required Allowable Value, the plant specific setpoint methodology may be revised, as appropriate, if the history and all other pertinent information indicate a need for the revision. The setpoint shall be left set consistent with the assumptions of the current plant specific setpoint methodology.

The 92 day frequency is based on the specified high reliability and low drift of the devices that are used to implement the Functions. In addition, the self-test features of the SSLC provides confidence that most failures that occur between surveillances will be automatically detected. The diversity of Functions provided for plant protection (including manual actuation), coupled with the SENSOR CHANNEL CHECKS provide confidence that this frequency is adequate.

The OPERABILITY of the SENSOR CHANNELs is determined by injecting a test signal in a single channel as near to the source as possible to assure that the DTFs in all divisions create an initiation signal when needed and that the signal is received by the TLF or DLC.

BASES

SURVEILLANCE REQUIREMENTS (continued)

SR 3.3.1.1.7

LPRM gain settings are determined from the local flux profiles measured by the Automatic Traversing Incore Probe (ATIP) System. This establishes the relative local flux profile for appropriate representative input to the APRM System. The 1000 MW·d/t Frequency is based on operating experience with LPRM sensitivity changes.

SR 3.3.1.1.8

This surveillance assures that no gaps in neutron flux indication exist between the SRNM and APRM measurements.

The overlap between SRNMs and APRMs is of concern when reducing power into the SRNM range. On power increases, the system design will prevent further increases (initiate a rod block) if adequate overlap is not maintained.

This SR is imposed only for the conditions given in the notes in the LCO. After the overlap requirement has been met and indication has transitioned to the SRNMs, establishing the overlap may not be possible (APRMs may be reading downscale once in MODE 2). If overlap is not demonstrated within a division, the Functions in that division that are required per the current MODE and other conditions shall be declared inoperable.

The basic Surveillance Frequency is whenever a transition to low power occurs. A maximum frequency of 7 days is also provided so the SR may be skipped if less than 7 days has elapsed since the last transition to power less than 5% RTP. The maximum Frequency of 7 days is reasonable based on reliability of the SRNMs and APRMs.

SR 3.3.1.1.9

The tests in the COMPREHENSIVE FUNCTIONAL TEST (CoFT) verify proper SSLC system function, computer component function, software and hardware interactions, response times, and error handling. Error statistics, usage statistics, historical statistics, and various other measures are used to verify proper performance of the SSLC. Successful completion of these tests establishes OPERABILITY of SENSOR CHANNELS, LOGIC CHANNELS, and OUTPUT CHANNELS.

BASES

SURVEILLANCE REQUIREMENTS (continued)

The ABWR protective action equipment is divided into segments to simplify software and hardware design and to limit the scope of effect of a given failure. A periodic test is performed to provide confidence that the segments and associated interconnections are operating within specified limits. The CoFT is designed to confirm that the current configuration and state of the system is acceptable and to determine the real-time performance of the overall system. Appropriately designed tests which include suitable data logging and analysis may be used to detect unexpected degradation.

The software based SSLC system contains many states, not all of which will occur over the life of the plant. The most important states are those that are required to mitigate accidents. Therefore, the CoFT focuses on usage testing, which exercises the overall system by simulating the input conditions under which the system is designed to perform, rather than coverage testing, which attempts to exercise all possible states of the system. Before plant start-up there is a high level of confidence that the SSLC system will operate as specified due to the extensive inspections, tests, and analyses conducted during the ITAAC pre-operational phases. During the plant operating life, the CoFT assures that the protective action equipment is within its specified performance characteristics.

The COMPREHENSIVE FUNCTIONAL TEST is intended to provide end to end testing. If necessary, other surveillances (e.g. CALIBRATION, OUTPUT CHANNEL TEST) that overlap the CoFT may be used to satisfy the requirements of the COMPREHENSIVE FUNCTIONAL TEST.

This surveillance overlaps or is performed in conjunction with the OUTPUT CHANNEL COMPREHENSIVE FUNCTIONAL TESTS in the LCOs that address the OUTPUT CHANNELS and LCOs that test the final actuation devices. The combined or overlapping tests provide complete end-to-end testing of all protective actions associated with the SSLC.

The 18 month frequency is based on the ABWR expected refueling interval and the need to perform this Surveillance under the conditions that apply during a plant outage to reduce the potential for an unplanned transient if the Surveillance were performed with the reactor at power. The high reliability of the devices used in the SSLC processing coupled with the DIVISION FUNCTIONAL TESTS provide confidence that the specified frequency is adequate.

BASES

SURVEILLANCE REQUIREMENTS (continued)

SR 3.3.1.1.10 and SR 3.3.1.1.11

A SENSOR CHANNEL CALIBRATION or CHANNEL CALIBRATION is a complete check of the instrument loop and the sensor. This test verifies that a channel responds to the measured parameter within the necessary range and accuracy. Calibration leaves the channel adjusted to account for instrument drift between successive calibrations. Measurement error historical determinations must be performed consistent with the plant specific setpoint methodology. The channel shall be left calibrated consistent with the assumptions of the setpoint methodology. As noted in SR 3.3.1.1.10, the calibration includes calibration of all parameters used to establish derived setpoints (e.g. TPM setpoint) and all parameters used to automatically bypass a trip Function (e.g. < 40% RTP bypass of TSV closure).

CHANNEL CALIBRATION includes calibration of the I/O units used to implement the ATWS mitigation feature initiation.

If the as found trip point (fixed or variable) is not within its Allowable Value, the plant specific setpoint methodology may be revised, as appropriate, if the history and all other pertinent information indicate a need for the revision. Calibration shall be provided that is consistent with the assumptions of the current plant specific setpoint methodology.

As noted in SR 3.3.1.1.10, neutron detectors are excluded from SENSOR CHANNEL CALIBRATION because of the difficulty of simulating a meaningful signal. Changes in neutron detector sensitivity are compensated for by performing the 7 day calorimetric calibration (SR 3.3.1.1.2) and the 1000 MW·d/t LPRM calibration (SR 3.3.1.1.7).

The 18 month frequency is based on the ABWR expected refueling interval and the need to perform this Surveillance under the conditions that apply during a plant outage. The frequency must be supported with a setpoint analysis that includes a drift allowance commensurate with this frequency.

SR 3.3.1.1.12

This SR ensures that the individual channel response times are less than or equal to the maximum values assumed in the accident analysis. The RPS RESPONSE TIME acceptance criteria are included in Reference 9.

As noted, neutron detectors are excluded from RPS RESPONSE TIME testing because the principles of detector operation virtually ensure an instantaneous response time.

BASES

SURVEILLANCE REQUIREMENTS (continued)

The 18 month frequency is based on the ABWR expected refueling interval and the need to perform this Surveillance under the conditions that apply during a plant outage. The specified high reliability of the devices used in the RPS processing coupled with operating experience which shows that random failures of instrumentation and embedded processor components causing serious time degradation, but not channel failure, are infrequent provides confidence that the specified Frequency is adequate.

SR 3.3.1.1.13

This SR ensures that the individual channel response times for ECCS actuation are less than or equal to the maximum values assumed in the accident analysis. Response time testing acceptance criteria are included in Reference 9.

The 18 month frequency is based on the ABWR expected refueling interval and the need to perform this Surveillance under the conditions that apply during a plant outage. The specified high reliability of the devices used in the ESF and ECCS processing-coupled with operating experience which shows that random failures of instrumentation and embedded processor components causing serious time degradation, but not channel failure, are infrequent-provide confidence that the specified Frequency is adequate.

SR 3.3.1.1.14

This SR ensures that the individual channel response times are less than or equal to the maximum values assumed in the accident analysis. The instrument response times must be added to the CIV closure times to obtain the ISOLATION SYSTEM RESPONSE TIME. ISOLATION SYSTEM RESPONSE TIME acceptance criteria are included in Reference 9.

A Note to the Surveillance excludes the radiation detectors from ISOLATION SYSTEM RESPONSE TIME testing. This Note is necessary because of the difficulty of generating an appropriate detector input signal and because the principles of detector operation virtually ensure an instantaneous response time. Response time for radiation detection channels shall be measured from detector output or the input of the first electronic component in the channel.

BASES

SURVEILLANCE REQUIREMENTS (continued)

The 18 month frequency is based on the ABWR expected refueling interval and the need to perform this Surveillance under the conditions that apply during a plant outage. The specified high reliability of the devices used in the RPS processing-coupled with operating experience which shows that random failures of instrumentation and embedded processor components that cause serious time degradation, but not channel failure, are infrequent-provides confidence that the specified Frequency is adequate.

REFERENCES

1. DCD Tier 2, Section 6.3.3, “ECCS Performance Evaluation”.
2. DCD Tier 2, Chapter 15, “Accident Analysis”.
3. DCD Tier 2, Figure 7.2-9, “RPS IED”.
4. DCD Tier 2, Figure 7.6-2A, “OPRM Logic”.
5. DCD Tier 2, Table 5.2-6, “LDS Control and Isolation Function vs. Monitored Process variables”.
6. DCD Tier 2, Section 15.4.1, “Continuous Rod Withdrawal Error- Low Power”.
7. DCD Tier 2, Appendix 15E, “ATWS Performance Evaluation”.
8. DCD Tier 2, Section 5.2.2, “Overpressure protection
”.

BASES

REFERENCES (continued)

9. DCD Tier 2, Section 1.1.3.

10. Not Used.

11. DCD Tier 2, Section 9.2.15.

Table B3.3.1.1-1 (Page 1 of 3)
SSLC Instrumentation Summary

FUNCTION	ECF Y/N	USAGE
1. Startup Range Monitors		
1a. SRNM Neutron Flux-High	N	RPS
1b. SRNM Neutron Flux-Short Period	N	RPS
1c. SRNM ATWS Permissive	N	SLCS & FWRB ATWS
1d. SRNM Inop	N	RPS
2. Average Power Range Monitors		
2a. APRM Neutron Flux - High, Setdown	N	RPS
2b. APRM Simulated Thermal Power-High, Flow Biased	N	RPS
2c. APRM Fixed Neutron Flux-High	N	RPS
2d. APRM Inop	N	RPS
2e. Rapid Core Flow Decrease	N	RPS
2f. Oscillation Power Range Monitor.	N	RPS
2g. APRM ATWS ADS Permissive	N	ADS Inhibit ATWS
3. Reactor Vessel Steam Dome Pressure - High	Y	RPS, SLCS, FWRB, ISO of CUW and RHR
4. Reactor Steam Dome Pressure - Low (Injection Permissive)	Y	LPFL
5. Reactor Water Level - High, Level 8	Y	RCIC, HPCF
6. Reactor Vessel Water Level - Low, Level 3	Y	RPS, ISO of RHR, CIV, SGTS
7. Reactor Vessel Water Level - Low, Level 2	Y	SLCS, FWRB, RCIC, CIV, ISO of CUW
8. Reactor Vessel Water Level - Level 1.5	Y	HPCF, DG, MSIV, ATWS ADS Inhibit

Table B3.3.1.1-1 (Page 2 of 3)
SSLC Instrumentation Summary

FUNCTION	ECF Y/N	USAGE
9. Reactor Vessel Water Level, Low-Level 1	Y	LPFL, ADS, CAM, DG, CIV, RCW/RSW, CUW Iso
10. Main Steam Isolation Valve-Closure	N	RPS
11. Drywell Pressure-High	Y	RPS, LPFL, RCIC, CAM, SGTS, DG, HPCF, ADS, CIV, RCW/RSW, CUW Iso, Trip of Condensate Pumps (b)
12. CRD Water Header Charging Pressure-Low	N	RPS
13. Turbine Stop Valve-Closure	N	RPS, EOC-RPT (a)
14. Turbine Control Valve Fast Closure, Trip Oil Pressure - Low	N	RPS, EOC-RPT (a)
15. Feedwater Line Differential Pressure - High	Y	Trip of Condensate Pumps (b)
16. Suppression Pool Temperature-High	N	RPS, SPC
17. Condensate Storage Tank Level - Low	Y	RCIC, HPCF
18. Suppression Pool Water level - High	Y	RCIC, HPCF
19. Main Steam Line Pressure - Low	N	MSIV
20. Main Steam Line Flow-High	N	MSIV
21. Condenser Vacuum - Low	N	MSIV
22. Main Steam Tunnel Temperature-High	N	ISO of CUW, MSIV
23. Main Turbine Area Temperature-High	N	MSIV
24. Reactor Building Area or Fuel Handling Area Exhaust Air Radiation-High	N	SGTS, CIV
25. RCIC Steam Line Flow-High	Y	ISO of RCIC
26. RCIC Steam Supply Line Pressure-Low	Y	ISO of RCIC

Table B3.3.1.1-1 (Page 3 of 3)
SSLC Instrumentation Summary

FUNCTION	ECF Y/N	USAGE
27. RCIC Equipment Area Temperature-High	Y	ISO of RCIC
28. RHR Area Temperatures -High	Y	ISO of RHR
29. CUW Differential Flow-High	Y	ISO of CUW
30. CUW Regenerative Heat Exchanger Temperature - High	Y	ISO of CUW
31. CUW non-regenerative Heat Exchanger Temperature - High	Y	ISO of CUW
32. CUW Equipment Area Temperature - High	Y	ISO of CUW
33. RCW/RSW Heat Exchanger Room Water Level - High	Y	Closure of RSW Valves and Tripping of RSW Pumps

(a) Composite signal sent to Recirculation Flow Controller from SSLC.
(b) Concurrent Drywell Pressure – High (Function 11) and Feedwater Line Differential Pressure – High (Function 15).

BASES

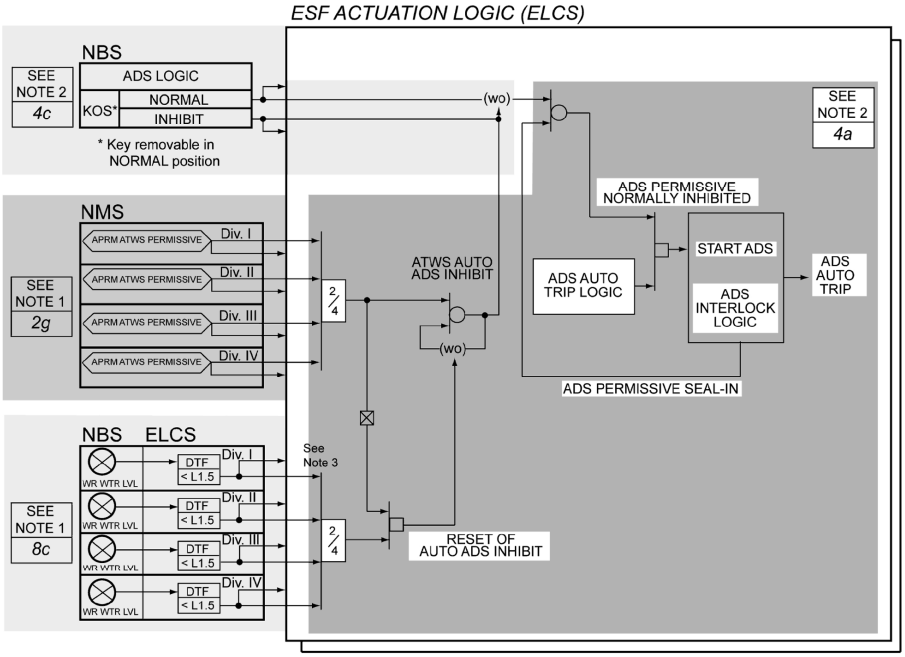

NOTES:
1. FUNCTION NUMBER AS LISTED IN TABLE 3.3.1.1-1 SSLC SENSOR INSTRUMENTATION
2. FUNCTION NUMBER AS LISTED IN TABLE 3.3.1.4-1 ESF ACTUATION INSTRUMENTATION
3. ELCS DIVISION-OF-SENSORS BYPASS APPLIES TO THIS VOTER

FIGURE B 3.3.1.1-1 ADS INHIBIT INSTRUMENTATION CHANNELS

BASES

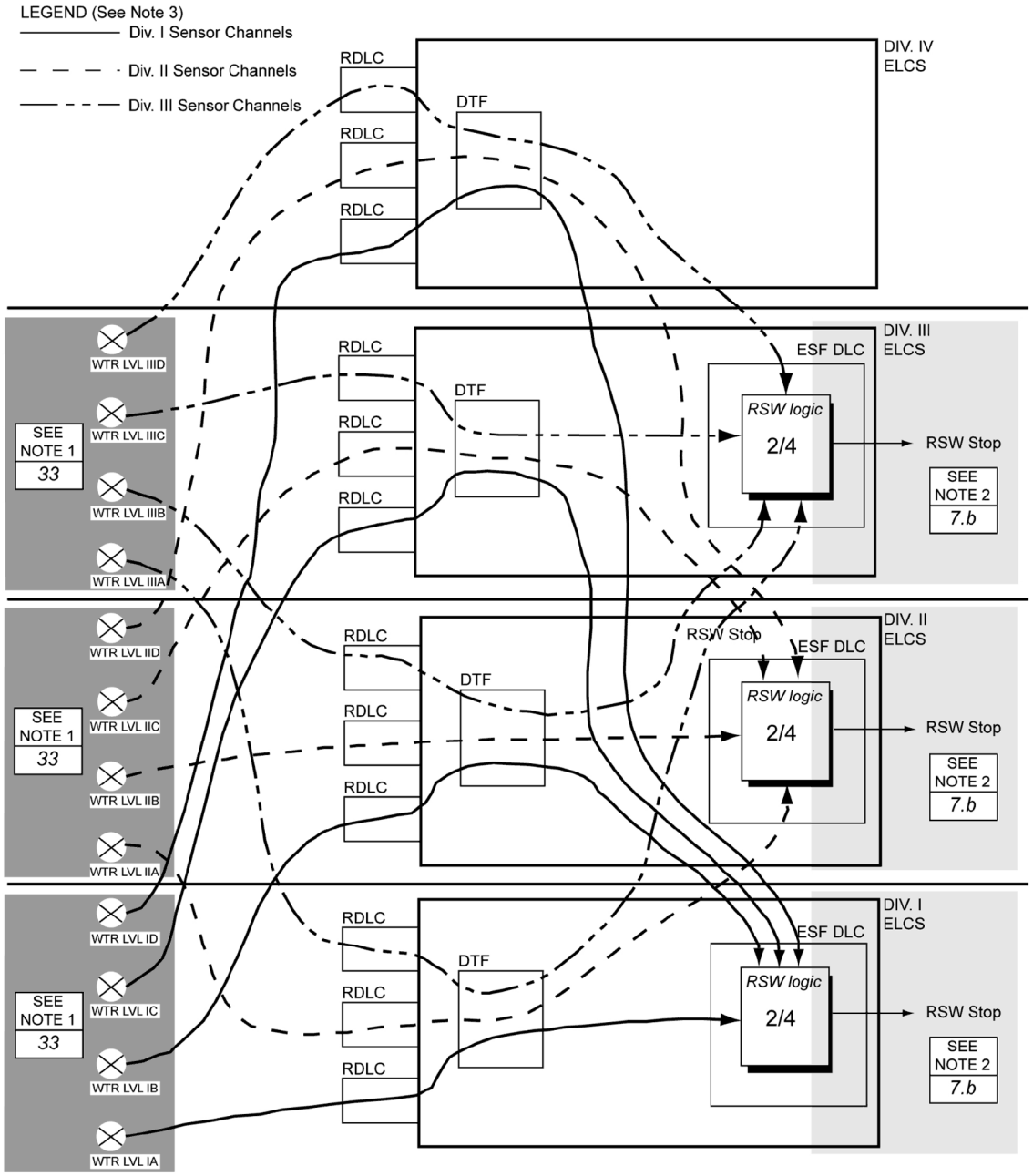

NOTES:
1. FUNCTION NUMBER AS LISTED IN TABLE 3.3.1.1-1 SSLC SENSOR INSTRUMENTATION
2. FUNCTION NUMBER AS LISTED IN TABLE 3.3.1.4-1 ESF ACTUATION INSTRUMENTATION
3. ALL INTER-DIVISIONAL CONNECTIONS USE ISOLATED FIBER OPTIC TRANSMISSION

FIGURE B 3.3.1.1-2 RCW/RSW HX ROOM LEAK DETECTION INSTRUMENTATION CHANNELS

B 3.3 INSTRUMENTATION

B 3.3.1.2 Reactor Protection System (RPS) and Main Steam Isolation Valve (MSIV) Actuation

BASES

BACKGROUND

The RPS initiates a reactor scram when one or more monitored parameters exceed their specified limit to preserve the integrity of the fuel cladding and the Reactor Coolant System (RCS) and minimize the energy that must be absorbed following a loss of coolant accident (LOCA). This can be accomplished either automatically or manually.

The RPS uses sensors, data transmission, signal processing, load drivers, relays, bypass circuits, and switches that are necessary to cause initiation of a reactor scram. Functional diversity is provided by monitoring a wide range of dependent and independent parameters (see B 3.3.1.1 “SSLC Sensor Instrumentation”). The RPS control logic hardware and software is contained within the four independent, divisional panels of Safety System logic and Control (SSLC) as described in LCO B 3.3.1.1.

Two hardwired manual scrams which completely bypass the SSLC processing are provided. The hardwired manual scrams remove power from the scram pilot valve solenoids and also energize the air header dump valve solenoids (backup scram) via two manual scram switches on the main control console or when the reactor mode switch is in the SHUTDOWN position.

The RPS logic includes a Main Steamline Isolation special bypass in addition to the division of sensors bypass and division of logic bypass provided for most SSLC instrumentation (see LCO B 3.3.1.1 for a description of the bypasses). The Main Steamline Isolation bypass is similar to the division of sensors bypass except it affects only the MSIV closure scram. This bypass is provided to permit operation with one steam line isolated.

The MSIV actuation automatically initiates closure of the MSIVs when measured parameters exceed specified limits. The function of the MSIVs valves, in combination with other accident mitigation systems, is to limit fission product release during and following postulated Design Basis Accidents (DBAs). Valve closure within the specified time limits ensures that the release of radioactive material to the environment will be consistent with the assumptions used in the analyses for a DBA.

MSIV isolation initiation includes sensors, data transmission, signal processing, load drivers, relays, and switches that are necessary to cause

BASES

BACKGROUND (continued)

closure of the valves. Functional diversity is provided by monitoring a wide range of independent parameters. The input data to the isolation logic originates in devices that monitor local parameters (e.g. high temperatures, high flows) as well as primary system and containment system parameters that are indicative of a leak. The MSIV control logic hardware and software for developing isolation initiation signals is contained within the four independent, divisional panels of Safety System logic and Control (SSLC) as described in LCO B 3.3.1.1, “SSLC Sensor Instrumentation”.

The Functions used to create the initiation signals are addressed in LCO B 3.3.1.1, “SSLC Sensor Instrumentation”. This LCO addresses the RPS and MSIV actuation devices.

The final initiation signals for isolating the main steamlines and de-energizing the scram solenoids are transmitted to the Output logic Units (OLUs) by the TLUs in the SSLC. There are OLUs in all four divisions and load drivers in the two actuation divisions. The RPS and MSIV use 2/4 logic in both the LOGIC CHANNELS and OUTPUT CHANNELs.

One RPS and one MSIV actuation output from the TLU may be bypassed. Implementing this bypass causes the LOGIC CHANNEL and OUTPUT CHANNEL logic to change to 2/3. Interlocks are provided to prevent placing more than one RPS or MSIV actuation output in bypass.

APPLICABLE SAFETY ANALYSIS, LCO and APPLICABILITY

The actions of the RPS are assumed in the safety analyses of References 1, 2, and 3. The RPS initiates a reactor scram when monitored parameter values exceeds its setpoint. See LCO B 3.3.1.1 for additional information.

RPS instrumentation satisfies Criterion 3 of the NRC Policy Statement. Functions not specifically credited in the ABWR safety analysis are retained for the overall redundancy and diversity of the RPS and MSIV actuation as required by the NRC approved licensing basis.

The isolation of the main steam lines is implicitly assumed in the safety analyses of References 2 and 3 to limit offsite doses. Refer to LCO 3.6.1.3, “Primary Containment Isolation Valves (PCIVs),” and LCO 3.3.1.1 “SSLC Sensor Instrumentation” Applicable Safety Analyses Bases, for more detail.

The containment isolation actuation satisfies Criterion 3 of the NRC Policy Statement.

BASES

APPLICABLE SAFETY ANALYSIS, LCO, and APPLICABILITY (continued)

The OPERABILITY of the RPS and MSIV closure is dependent on the OPERABILITY of the individual SENSOR CHANNEL Functions within each division and are covered by LCO 3.3.1.1, “SSLC Sensor Instrumentation”. The OPERABILITY of the LOGIC CHANNELs and OUTPUT CHANNELS (OLUs & load drivers) and manual initiation is covered by this LCO.

1. RPS Actuation

The RPS Actuation LOGIC CHANNELS and OUTPUT CHANNELS must be OPERABLE in MODE 1, MODE 2, and in MODE 5 with any control rod withdrawn from a core cell containing at least one fuel assembly. The NMS (SRNM and APRM) LOGIC CHANNELS must be OPERABLE when the associated Functions in LCO 3.3.1.1 are required to be OPERABLE. The Shutdown Margin (LCO 3.1.1) and One Rod-Out Interlock (LCO 3.9.2) provide confidence that no event requiring RPS will occur while in MODE 5. RPS is not required in MODES 3 and 4 since all control rods are fully inserted and the Reactor Mode Switch in Shutdown position rod withdrawal block (LCO 3.3.5.1, “Control Rod Block Instrumentation”) prevent rod withdrawal in these modes.

Three unbypassed LOGIC CHANNELS and OUTPUT CHANNELS must be OPERABLE to assure that no single failure will preclude scram when needed.

2. MSIV and MSL Drain Valves Actuation

The MSIV and MSL Drain Valves Actuation Function uses a TLF in all four divisions. The TLF acquires trip information from the DTFs and sends actuation signals to the OLUs. Two normally energized, solenoid operated, pilot valves are located on each MSIV. Both solenoids must be de-energized to cause the valve to close. Each pilot solenoid is controlled by independent series/parallel arrangements of four load drivers (eight total for each MSIV) with the outputs of the four OLUs arranged so that a trip signal from any two of them de-energizes both solenoids. For each MSIV, the Load drivers for one pilot valve are in division I and the load drivers for the other pilot valve are in division II.

The MSIV actuation must be operable in MODES 1, 2, and 3 since these are the modes where one or more of the MSIV closure functions must be OPERABLE.

Four LOGIC CHANNELS and OUTPUT CHANNELS must be OPERABLE to assure that no single instrument failure can preclude MSIV closure when needed.

BASES

APPLICABLE SAFETY ANALYSIS, LCO, and APPLICABILITY (continued)

3. Manual RPS Scram

The Manual Scram pushbuttons are completely independent of and isolated from the RPS automatic trip divisions. This Function was not specifically credited in any ABWR safety analysis, but it is retained for the overall redundancy and diversity of the RPS as required by the NRC approved licensing basis.

There are two independent manual scram switches, one in division II and one in division III. Each switch removes power from one set of scram solenoids and energizes one of the air header dump valves so the function completely bypasses the automatic scram logic divisions. Both switches must be activated to cause a scram.

There is no Allowable Value for this Function since the Functions are mechanically actuated based solely on the position of the pushbuttons.

Two divisions of Manual Scram are required to be OPERABLE in MODES 1 and 2, and in MODE 5 with any control rod withdrawn from a core cell containing one or more fuel assemblies, since these are the MODES and other specified conditions when control rods are withdrawn.

4. Reactor Mode Switch – Shutdown Position

The Reactor Mode Switch – Shutdown Position Function provides manual reactor trip signals, via the manual scram logic divisions (II and III), that are redundant to the automatic protective instrumentation divisions. This Function was not specifically credited in any ABWR safety analysis, but it is retained for the overall redundancy and diversity of the RPS as required by the NRC approved licensing basis.

The reactor mode switch is a single switch with independent contacts for initiating scram when the switch is in the SHUTDOWN position. This function removes power from the scram solenoids and energizes the air header dump valves so it completely bypasses the automatic scram logic divisions.

There is no Allowable Value for this Function since the divisions are mechanically actuated based solely on reactor mode switch position.

Two divisions of the Reactor Mode Switch – Shutdown Position Function are available and required to be OPERABLE. The Reactor Mode – Switch Shutdown Position Function is required to be OPERABLE in MODES 1 and 2, and in MODE 5 with any control rod withdrawn from a core cell containing one or more fuel assemblies, since these are the MODES and other specified conditions when control rods are withdrawn.

BASES

APPLICABLE SAFETY ANALYSIS, LCO, and APPLICABILITY (continued)

5. Manual MSIV Actuation

The Manual Initiation pushbutton Function provides signals to the OLU in each division that are redundant to the automatic protective instrumentation and provide manual isolation capability. No specific ABWR safety analysis that takes credit for this Function. It is retained for overall redundancy and diversity of the isolation function as required by the NRC in the plant licensing basis.

There are four MSIV manual actuation pushbuttons. The data is routed directly to the OLUs for the MSIVs so this Function bypasses the EMS, DTMs and TLUs.

Pressing any two of the four manual pushbuttons will cause isolation of all four steam lines. There is no Allowable Value for this Function since the channels are mechanically actuated based solely on the position of the pushbuttons.

Four channels of the MSL Manual Initiation Function are required to be OPERABLE in MODES 1, 2, and 3, since these are the MODES in which the MSIVs are required to be OPERABLE.

ACTIONS

A Note has been provided to modify the ACTIONS related to RPS and MSIV Actuation channels. Section 1.3, Completion Times, specifies that once a Condition has been entered, subsequent trains, subsystems, components, or variables expressed in the Condition, discovered to be inoperable or not within limits, will not result in separate entry into the Condition. Section 1.3 also specifies that Required Actions of the Condition continue to apply for each additional failure, with Completion Times based on initial entry into the Condition. However, the Required Actions for inoperable RPS and MSIV Actuation channels provide appropriate compensatory measures for multiple inoperable channels. As such, a Note has been provided that allows separate Condition entry for each inoperable RPS or MSIV Actuation channel.

A.1, A.2.1, A.2.2.1 and A.2.2.2

These Actions assure that appropriate compensatory measures are taken when one LOGIC CHANNEL or MSIV manual channel becomes inoperable. For these Functions, a failure in one channel will cause the actuation logic to become 1/3 or 2/3 depending on the nature of the failure (i.e failure which causes a channel trip vs. a failure which does not cause a channel trip). Therefore, an additional single failure will not result in loss of protection.

BASES

ACTIONS (continued)

A.1, A.2.1, A.2.2.1 and A.2.2.2 (continued)

Action A.1 forces a trip condition in the inoperable division which causes the initiation logic to become 1/3 for the Function. In this condition a single additional failure will not result in loss of protection and the availability of the Function to provide a plant protective action is at least as high as 2/4 trip logic. Since plant protection capability is within the design basis no further action is required when the inoperable channel is placed in trip.

Action A.2.1 bypasses the inoperable division which causes the logic to become 2/3 so a single failure will not result in loss of protection or cause a spurious initiation. Since overall redundancy is reduced, operation in this condition is permitted only for a limited time. Action A.2.2.1 restores the inoperable channel. Action A.2.2.2 repeats Action A.1 if repairs are not made within the allowable Completion Time of Action A.2.2.1. Either of the Actions A.2.2.1 or A.2.2.2 places plant protection capability within the design basis so no further action is required.

The Completion Time of six hours for implementing Actions A.1 and A.2.1 is based on providing sufficient time for the operator to determine which of the actions is appropriate. The Completion Time is acceptable because the probability of an event requiring the Function, coupled with failures that would defeat two other channels associated with the Function, occurring within that time period is quite low.

Implementing Action A.2.1 provides confidence that Plant protection is maintained (2/3 logic) for an additional single instrument failure. However, with division I or III in bypass, a loss of the division II power supply could disable two of the remaining channels. Therefore, operation with one division in bypass is restricted to 30 days (Actions A.2.2.1 and A.2.2.2 Completion Time). The probability of an event requiring the Function coupled with undetected failures which cause the loss of two of the remaining OPERABLE divisions in the Completion Time is quite low.

B.1, B.2, and B.3

Condition B occurs if two LOGIC CHANNELs for the same Function or MSIV manual channels become inoperable in a fashion that does not result in an Actuation. In this Condition, the actuation logic could become 2/2. Therefore, it is appropriate to place one division in trip (Action B.1) and the other in TLU output bypass (Action B.2). The trip logic then becomes 1/2 so a single failure in the remaining operable divisions would not cause loss of protection. However, a single failure in one of the operable divisions could result in a spurious trip.

BASES

ACTIONS (continued)

B.1, B.2, and B.3 (continued)

The Completion Times for implementing Actions B.1 and B.2 is based on providing adequate time for the operator to implement the Required Actions. The Completion Times are acceptable because the probability of an event requiring the Function, coupled with a failure in one or two of the other channels associated with the Function, occurring within that time period is quite low.

Action B.3 restores at least one of the failed channels to OPERABLE status. A Completion Time of 30 days is permitted for this Action. The basis for the Completion Time is as given for Action A.2.2.1 and A.2.2.2 since the plant protective action capability is similar.

C.1 and C.2

This Condition applies when three LOGIC CHANNELS for the same Function or three MSIV manual initiation channels become inoperable. This Condition represents a case where intended protective action from a Function is 1/1 (one channels fails tripped) or is completely unavailable.

Action C.1 forces the initiation logic to become 1/1 so a protective Action from the Function is still available but the single failure criteria for plant protective action is not met.

Action C.2 causes restoration of a second channel for the Function so the initiation logic becomes 1/2 and plant protection is maintained for a single additional failure. The six hour Completion Time for C.2 provides a reasonable amount of time to effect repairs on at least one of the inoperable channels and avoids the risks associated with plant shutdown.

D.1 and D.2

This Condition occurs when all of the LOGIC CHANNELs for the same Function or all of the manual MSIV channels become inoperable. In this Condition the intended protective action from a Function is completely unavailable.

Although Action D.1 does not restore the initiation capability from the Function it is required so that the logic will become 1/1 when Action D.2 is completed.

Action D.2 restores of at least one channel of the Function which causes the actuation logic to become 1/1 so some degree of protective action is

BASES

ACTIONS (continued)

D.1 and D.2 (continued)

restored. The one hour Completion Time for D.2 provides some amount of time to effect repairs on at least on of the inoperable channels and avoid the risks associated with plant shutdown. Continued plant operation in this condition for the specified time does not contribute significantly to plant risk because the probability of an event requiring the Function within the completion Time is quite low.

E.1

These Actions assure that appropriate compensatory measures are taken when one OUTPUT CHANNEL becomes inoperable. For these Functions, a failure in one channel will cause the actuation logic to become 1/3 or 2/3 depending on the type of failure (i.e failure which causes a trip vs. a failure which does not cause a trip). Therefore, an additional single failure will not result in loss of protection.

Action E.1 forces a trip condition in the inoperable channel which causes the actuation logic to become 1/3. In this condition a single additional failure will not result in loss of protection and the availability of the Function to provide a plant protective action is at least as high as for the 2/4 trip logic. Since plant protection capability is within the design basis no further action is required.

The Completion Time of six hours for implementing Action E.1 is acceptable because the probability of an event requiring the Function, coupled with failures that would defeat three other channels associated with the Function, occurring within that time period is quite low.

F.1 and F.2

Condition F occurs if two OUTPUT CHANNELs for the same Function become inoperable in a fashion that does not result in an Actuation. In this Condition, the actuation logic could become 2/2. Placing one of the inoperable channels in trip (Action F.1) causes the logic to become 1/2 so a single failure in the remaining operable channels would not cause loss of protection. However, a single failure in one of the operable channels could result in a spurious trip.

The Completion Times for implementing Action F.1 is based on providing adequate time for the operator to implement the Required Action. The Completion Time is acceptable because the probability of an event

BASES

ACTIONS (continued)

F.1 and F.2 (continued)

requiring the Function, coupled with undetected failures in one of the OPERABLE channels associated with the Function, occurring within that time period is quite low.

Action F.2 restores at least one of the failed channels to OPERABLE status. A Completion Time of 7 days is permitted for this Action. The Completion Time is based on the low probability of an undetected failure in both of the OPERABLE channels for the Function occurring in that time period.

G.1

This Condition applies when three or four OUTPUT CHANNELS for the same Function become inoperable. This Condition represents a case where protective action from a Function is 1/1 or is completely unavailable.

Action G.1 requires restoring a total of at least two channels to OPERABLE status which restores the actuation logic to 1/2 so plant protection is maintained for a single additional failure.

The one hour Completion Time provides some amount of time to effect repairs and avoid the risks associated with plant shutdown. Plant operation in this condition for the specified time does not contribute significantly to plant risk because the probability of an event requiring the Function within the completion Time is quite low.

H.1

This Condition addresses failures in the Reactor Mode Switch – Shutdown Position Function. Since the Function Logic is 2/2 any failure causes protective action from the Function to become unavailable.

Action H.1 restores the required channels to OPERABLE status. The one hour Completion Time for H.1 provides some amount of time to effect repairs prior to implementing additional Actions to place the plant in a state where the LCO does not apply. Continued operations in this condition for the specified time does not contribute significantly to plant risk because the probability of an event requiring the Function within the Completion Time is quite low.

BASES

ACTIONS (continued)

I.1 and I.2

If one of the manual scram divisions becomes inoperable then manual scram is unavailable. Placing the affected division in trip (Action I.1) causes the manual scram logic to become 1/1. Since the manual trip uses a minimum of equipment and completely bypasses the automatic RPS trip logic, there is high confidence that manual scram will be available from the remaining switch if needed.

The one hour Completion Time for I.1 provides some amount of time for the operator to implement the Action. Plant operation in this condition for the specified time does not contribute significantly to plant risk because the probability of an event requiring the Function within the Completion Time is quite low.

Action I.2 restores all required manual scram channels. The Completion Time for Action I.2 is set the same as for condition B.3 since the conditions are similar in terms of overall plant protection.

J.1

This Condition assures that appropriate actions are taken for one or more inoperable RPS Actuation Functions while in MODES 1 or 2. If the specified Actions for Conditions A, B, C, D, E, F, G, H, or I are not implemented within the specified Completion Times the plant must be placed in a condition where the LCO does not apply. This is accomplished by placing the plant in MODE 3. The Completion Time is reasonable, based on operating experience, to reach MODE 3 from MODES 1 or 2 in an orderly manner and without challenging plant systems.

K.1

This Condition assures that appropriate actions are taken for one or more inoperable RPS Actuation Functions while in MODE 5 with any control rod withdrawn from a core cell containing at least one fuel assembly. If the specified Actions for Conditions A, B, C, D, E, F, G, H, or I are not implemented within the specified Completion Times the plant must be placed in a condition where the LCO does not apply. This is done by immediately initiating action to insert all insertable control rods in core cells containing one or more fuel assemblies. Control rods in core cells

BASES

ACTIONS (continued)

K.1 (continued)

containing no fuel assemblies do not affect the reactivity of the core and are, therefore, not required to be inserted. Action must continue until all insertable control rods in core cells containing one or more fuel assemblies are fully inserted.

L.1, L.2.1 and L.2.2

This Condition assures that appropriate actions are taken for one or more inoperable MSIV Actuation Functions. If the specified Actions for Conditions A, B, C, D, E, F, or G are not implemented within the specified Completion Times the plant must be placed in a condition where the LCO does not apply. This is accomplished by isolating the affected penetration flow paths or placing the plant in MODE 4 where the LCO does not apply.

The Completion Times of 12 hours for isolating the penetration flow paths (Action L.1) provides sufficient time to identify the effected flow paths and perform the action. The Completion Times for achieving MODE 4 (Actions L.2.1 and L.2.2) are reasonable, based on operating experience, to reach MODE 4 in an orderly manner and without challenging plant systems.

SURVEILLANCE REQUIREMENTS

The CHANNEL FUNCTIONAL TESTS required in LCO 3.3.1.1, “SSLC Sensor Instrumentation” ensures that the required SENSOR CHANNELS will perform as intended and generate a trip condition when required. This LCO addresses the operability of the LOGIC CHANNELS and OUTPUT CHANNELS for RPS and MSIV, which covers the TLUs, the output logic units (OLUs), the load drivers, and the manual actuation Functions.

SR 3.3.1.2.1

A CHANNEL FUNCTIONAL TEST is performed on each manual RPS scram division to ensure that the entire manual trip channel will operate as intended.

This function uses a minimum of components, and the components have been proven highly reliable through operating experience. However, a relatively short surveillance interval of 7 days is used since availability of manual scram is important for providing a diverse means of reactor scram and the logic is 2/2. The probability of an event requiring manual scram coupled with a failure of one of the scram channels within this time period is very low.

BASES

SURVEILLANCE REQUIREMENTS (continued)

SR 3.3.1.2.2

A DIVISIONAL FUNCTIONAL TEST is performed on the LOGIC CHANNELS in each division to provide confidence that the functions will perform as intended. The test is performed by replacing the normal signal with a test signal as far upstream in the channel as possible within the constraints of the instrumentation design and the need to perform the surveillance without disrupting plant operations. See Section 1.1, “definitions” for additional information on the scope of the test.

The devices used to implement the RPS and MSIV actuation functions are specified to be of high reliability and have a high degree of redundancy. Therefore, the 92 day frequency provides confidence that device Actuation will occur when needed. This test overlaps or is performed in conjunction with the DIVISIONAL FUNCTIONAL TESTS performed under LCO 3.3.1.1, “SSLC Sensor Instrumentation” to provide testing up to the OUTPUT CHANNELS.

SR 3.3.1.2.3

A CHANNEL FUNCTIONAL TEST is performed on each manual MSIV channel to ensure that the channel will operate as intended.

The devices used to implement the manual MSIV actuation are of high reliability and have a high degree of redundancy. Therefore, the 92 day frequency provide confidence that device Actuation will occur when needed. The probability of an event requiring manual MSIV actuation coupled with undetected failures in three channels within this time period is very low.

SR 3.3.1.2.4

The tests in the COMPREHENSIVE FUNCTIONAL TEST (CoFT) verify proper SSLC system function, computer component function, software and hardware interactions, response times, and error handling. Error statistics, usage statistics, historical statistics, and various other measures are used to verify proper performance of the SSLC. Successful completion of these tests establishes OPERABILITY of SENSOR CHANNELS, LOGIC CHANNELS, and OUTPUT CHANNELS.

The ABWR protective action equipment is divided into segments to simplify software and hardware design and to limit the scope of effect of a given failure. A periodic test is performed to provide confidence that the

BASES

SURVEILLANCE REQUIREMENTS (continued)

SR 3.3.1.2.4 (continued)

segments and associated interconnections are operating within specified limits. The CoFT is designed to confirm that the current configuration and state of the system is acceptable and to determine the real-time performance of the overall system. Appropriately designed tests which include suitable data logging and analysis may be used to detect unexpected degradation.

The software based SSLC system contains many states, not all of which will occur over the life of the plant. The most important states are those that are required to mitigate accidents. Therefore, the CoFT focuses on usage testing, which exercises the overall system by simulating the input conditions under which the system is designed to perform, rather than coverage testing, which attempts to exercise all possible states of the system. Before plant start-up there is a high level of confidence that the SSLC system will operate as specified due to the extensive inspections, tests, and analyses conducted during the ITAAC pre-operational phases. During the plant operating life, the CoFT assures that the protective action equipment is within its specified performance characteristics.

The COMPREHENSIVE FUNCTIONAL TEST is intended to provide end to end testing. If necessary, other surveillances (e.g. CALIBRATION, OUTPUT CHANNEL TEST) that overlap the CoFT may be used to satisfy the requirements of the COMPREHENSIVE FUNCTIONAL TEST.

This surveillance overlaps or is performed in conjunction with the COMPREHENSIVE FUNCTIONAL TEST in LCO 3.3.1.1, “SSLC Sensor Instrumentation”. The combined or overlapping tests provide complete end-to-end testing of all RPS and MSIV protective actions.

The 18 month frequency is based on the ABWR expected refueling interval and the need to perform this Surveillance under the conditions that apply during a plant outage to reduce the potential for an unplanned transient if the Surveillance were performed with the reactor at power. The high reliability of the devices used in the SSLC processing coupled with the CHANNEL FUNCTIONAL TESTs provide confidence that the specified frequency is adequate.

SR 3.3.1.2.5

The OUTPUT CHANNEL FUNCTIONAL TEST demonstrates the capability to actuate all of the devices (e.g pumps, valves, etc) required to implement a protective action.

BASES

SURVEILLANCE REQUIREMENTS (continued)

SR 3.3.1.2.5 (continued)

The 18 month frequency is based on the ABWR expected refueling interval and the need to perform this Surveillance under the conditions that apply during a plant outage to reduce the potential for an unplanned transient if the Surveillance were performed with the reactor at power. The high reliability of the devices used in the SSLC processing coupled with the DIVISIONAL FUNCTIONAL TESTS provide confidence that the specified frequency is adequate.

SR 3.3.1.2.6

This SR ensures that the RPS RESPONSE TIMES are less than or equal to the maximum values assumed in the accident analysis.

This surveillance overlaps or is performed in conjunction with the RPS RESPONSE TIME Surveillance in LCO 3.3.1.1, “SSLC Sensor Instrumentation.” The combined or overlapping tests provide complete end-to-end testing of the RPS protective actions.

The 18 month frequency is based on the ABWR expected refueling interval and the need to perform this Surveillance under the conditions that apply during a plant outage. The high reliability of the devices used in the RPS processing coupled with operating experience which shows that random failures of instrumentation and embedded processor components causing serious time degradation, but not channel failure, are infrequent provide confidence that the specified Frequency is adequate.

SR 3.3.1.2.7

This SR ensures that the individual MSIV channel response times are less than or equal to the maximum values assumed in the accident analysis. The instrument response times must be added to the MSIV closure times to obtain the ISOLATION SYSTEM RESPONSE TIME.

This surveillance overlaps or is performed in conjunction with the ISOLATION RESPONSE TIME Surveillance in LCO 3.3.1.1, “SSLC Sensor Instrumentation.” The combined or overlapping tests provide complete end-to-end testing of the MSIV response time.

The 18 month frequency is based on the ABWR expected refueling interval and the need to perform this Surveillance under the conditions

BASES

SURVEILLANCE REQUIREMENTS (continued)

SR 3.3.1.2.7 (continued)

that apply during a plant outage. The high reliability of the devices used in the MSIV processing coupled with operating experience which shows that random failures of instrumentation and embedded processor components causing serious time degradation, but not channel failure, are infrequent provide confidence that the specified Frequency is adequate.

REFERENCES

1. DCD Tier 2, Section 5.2.2, “Overpressure protection”.
2. DCD Tier 2, Section 6.3.3, “ECCS performance evaluation.”
3. DCD Tier 2, Chapter 15, “Accident Analysis”.

B 3.3 INSTRUMENTATION

B 3.3.1.3 Standby Liquid Control (SLC) and Feedwater Runback (FWRB) Actuation

BASES

BACKGROUND

The SLC and FWRB Functions provide alternate means for reactivity reduction to protect against the remote probability of a failure to insert all control rods when needed.

These Functions are in addition to those described in LCO 3.3.4.1, “ATWS and EOC-RPT Instrumentation”. SLC and FWRB are initiated on Reactor Vessel Water Level - Low, Level 2 or Reactor Steam Dome Pressure - High. These features will not be initiated unless the neutron flux level is above the value specified for the SRNM ATWS permissive Function.

The SLC injects a solution of Boron (a neutron absorber) and water into the reactor vessel. The available quantity of borated water is sufficient to reduce core reactivity to an acceptable level for a postulated failure of all control rods to be inserted. There are two SLC pumps and injection valves.

The FWRB causes the feedwater pumps to go to minimum speed, which reduces core inlet subcooling and therefore core reactivity and power level. A runback signal is sent to each of the feedwater pumps.

An SLC and FWRB SENSOR CHANNEL, LOGIC CHANNEL and OUTPUT CHANNEL is contained in each of the four SSLC divisions. All channel types use 2/4 logic with suitable isolation between divisions. The channels are separate from the SSLC processing devices. See the background section of LCO 3.3.1.1, “SSLC Sensor Instrumentation” for additional information.

APPLICABLE SAFETY ANALYSIS, LCO and APPLICABILITY

SLC and FWRB are assumed in the ABWR safety analysis of Reference 1. These features are initiated to aid in preserving the integrity of the fuel cladding following events in which a required scram may not occur. The features are included as required by the NRC Policy Statement.

The OPERABILITY of the SLC and FWRB is dependent on the OPERABILITY of the individual Functions. Each Function must have a required number of OPERABLE channels.

BASES

APPLICABLE SAFETY ANALYSIS, LCO, and APPLICABILITY (continued)

The individual Functions are required to be OPERABLE in MODES 1 and 2 to protect against postulated common mode failures of the Reactor Protection System by providing a diverse method of reducing core reactivity. In MODES 1 and 2 the reactor may be producing significant power. In MODES 3 and 4, the reactor is shut down with all control rods inserted; thus, an ATWS event is not credible. In MODE 5, the one-rod-out interlock ensures the reactor remains subcritical; thus, an ATWS event is not significant.

The SENSOR CHANNELS are addressed in LCO 3.3.1.1, “SSLC Sensor Instrumentation”. This LCO addresses the LOGIC and OUTPUT CHANNELS. The discussions are given below on a Function by Function basis. Figure B 3.3.1.3-1 illustrates the Functions.

1.a, 2.a. SLC Actuation and FWRB Actuation LOGIC CHANNELS

These LOGIC CHANNELS must generate and transmit initiation data to the OUTPUT CHANNELS. Each of the four channels sends initiation data to all four OUTPUT CHANNELS. Four channels of this Function are required to be OPERABLE and three are necessary to provide confidence that no single instrument failure can preclude RFC or FWRB initiation from this Function on a valid signal.

There is no allowable value associated with this Function.

1.b, 2.b. SLC and FWRB Actuation OUTPUT CHANNELS

These OUTPUT CHANNELS cause actuation of the SLC and FWRB. Protective action will occur when Actuation signals occur in 2 of the 4 channels. Four channels are required to be OPERABLE and three channels must be OPERABLE to provide confidence that no single instrument failure can preclude an SLC or FWRB Actuation from this Function on a valid signal.

3. Manual ATWS-ARI/SLCS Initiation

The Manual ATWS-ARI/SLCS Initiation pushbutton channels introduce signals into the SLC and FWRB logic to provide manual initiation capability that is redundant to the automatic initiation. There are two pushbuttons and both must be actuated to initiate the SLCS and FWRB functions. Each pushbutton represents a single manual initiation channel (A, B), and sends redundant initiation signals to each of the channels of the RFCS Fault Tolerant Digital Controller (FTDC). The RFCS FTDC sends redundant manual initiation status signals to each of four ATWS Logic Processors (Divisions I, II, III, and IV). Each Logic Processor performs 2-out-of-3 voting of the manual initiation status signals received

BASES

APPLICABLE SAFETY ANALYSIS, LCO, and APPLICABILITY (continued)

from the RFCS FTDC. The logic used for manual ARI is covered in 3.3.4.1, "ATWS & EOC-RPT Instrumentation."

There is no Allowable Value for this Function since it is mechanically actuated based solely on the position of the pushbuttons. Two channels per division of the Manual Initiation Function are required to be OPERABLE when the SLC and FWRB are required to be OPERABLE.

ACTIONS

A Note has been provided to modify the ACTIONS related to the Functions covered by this LCO. Section 1.3, Completion Times, specifies that once a Condition has been entered, subsequent trains, subsystems, components, or variables expressed in the Condition, discovered to be inoperable or not within limits, will not result in separate entry into the Condition. Section 1.3 also specifies that Required Actions of the Condition continue to apply for each additional failure, with Completion Times based on initial entry into the Condition. However, the Required Actions for inoperable SLC and FWRB Actuation provide appropriate compensatory measures for multiple inoperable channels. As such, a Note has been provided that allows separate Condition entry for each inoperable channel.

A.1 and A.2

These Actions assure that appropriate compensatory measures are taken when a LOGIC CHANNEL or manual initiation channel becomes inoperable in one division. A failure in one division will cause the logic to become 1/3 or 2/3 depending on the nature of the failure (i.e. failure which causes a trip vs. a failure which does not cause a trip). Therefore, an additional single failure will not result in loss of protection.

Action A.1 bypasses the inoperable channel which forces the logic to become 2/3 so a single failure will not result in loss of protection or cause a spurious initiation. The Completion Time of six hours for implementing this Action provides sufficient time to perform the Action. Implementing Required Action A.1 provides confidence that Plant protection is maintained for an additional single instrument failure.

Action A.2 requires the restoration of the inoperable channel within 30 days. This 30 day Completion Time is acceptable since completion of Action A.1 causes the logic to become 2/3.

BASES

ACTIONS (continued)

B.1 and B.2

These Actions assure that appropriate compensatory measures are taken when a LOGIC CHANNEL or manual initiation channel is inoperable in two divisions due to failures that do not cause an initiation. For this condition, the actuation logic becomes 2/2 or 1/2, depending on the nature of the failures.

Action B.1 bypasses one of the divisions containing the failed channel to permit repairs on that channel. Action B.2 restores at least one inoperable channel to OPERABLE status.

The Completion Time of 6 hours for implementing Action B.1 is based on providing sufficient time for the operator to determine which of the failed channels to bypass and to perform the Action. The Completion Time is acceptable because the probability of an event requiring the Function, coupled with a failure that would defeat the other channels associated with the Function, occurring within that time period is low.

When Action B.1 is completed, protective action is maintained as long as the other channels remain OPERABLE.

Therefore, operation in this condition is permitted for 7 days (Action B.2 Completion Time). The probability of an event requiring plant scram, combined with failure to scram and an undetected failure in another channel of the Function, within the Completion Time is quite low.

C.1

This Action assures that appropriate compensatory measures are taken when one OUTPUT CHANNEL of a Function becomes inoperable. For these Functions, a failure in one OUTPUT CHANNEL will cause the actuation logic to become 1/3 or 2/3 depending on the nature of the failure (i.e. failure which causes a channel trip vs. a failure which does not cause a channel trip). Therefore, an additional single failure will not result in loss of protection.

Action C.1 restores the channel to OPERABLE status. Since plant protection Action is maintained given an additional single failure, operation in this condition for 30 days is permitted. The Completion Time is acceptable because the probability of an event requiring plant scram, combined with failure to scram and undetected failures that would defeat two other channels associated with the Function, occurring within that time period is quite low.

BASES

ACTIONS (continued)

D.1

These actions are intended to ensure that appropriate actions are taken when two OUTPUT CHANNELS become inoperable. For this Condition the actuating logic becomes 2/2 so automatic initiation capability is maintained.

The Completion Time to restore one of the inoperable channels is sufficient for the operator to take corrective action and takes into account the low likelihood of an event requiring actuation of the SLC and FWRB coupled with a failure in an additional channel during this period.

E.1

With any Required Action and associated Completion Time not met, or multiple failures that cause the loss of a Function or the logic to become 1/1 the SLC must be declared inoperable. This will cause the LCO for an inoperable SLC to be invoked and appropriate compensatory measures taken.

The allowed Completion Time provides sufficient time to perform the Actions.

SURVEILLANCE REQUIREMENTS

As noted, the SRs to be applied to each required Function are given in Table 3.3.1.3-1.

SR 3.3.1.3.1

A DIVISION FUNCTIONAL TEST is performed on each required LOGIC CHANNEL and manual channel to ensure that the Functions will perform as intended. The test is performed by replacing the normal signal with a test signal as far upstream in the channel as possible within the constraints of the instrumentation design and the need to perform the surveillance without disrupting plant operations. See Section 1.1, “Definitions” for additional information on the scope of the test.

The devices used to implement the SLC and FWRB actuation functions are specified to be highly reliable and have a high degree of redundancy. Therefore, the 92 day frequency provides confidence that device Actuation will occur when needed. This test overlaps or is performed in conjunction with the DIVISIONAL FUNCTIONAL TESTS performed under LCO 3.3.1.1, “SSLC Sensor Instrumentation” to provide testing up to the OUTPUT CHANNEL.

BASES

SURVEILLANCE REQUIREMENTS (continued)

SR 3.3.1.3.1 (continued)

The devices used to implement the SLC and FWRB actuation functions are specified to be of high reliability and have a high degree of redundancy. Therefore, the 92 day frequency provides confidence that device Actuation will occur when needed. This test overlaps or is performed in conjunction with the DIVISIONAL FUNCTIONAL TESTS performed under LCO 3.3.1.1, “SSLC Sensor Instrumentation” to provide testing up to the OUTPUT CHANNEL.

SR 3.3.1.3.2

The LOGIC SYSTEM FUNCTIONAL TEST demonstrates the OPERABILITY of the initiation logic for the complete system. The system functional testing performed in other LCOs overlaps this Surveillance to provide complete testing of the assumed safety function.

The 18 month frequency is based on the ABWR expected refueling interval and the need to perform this Surveillance under the conditions that apply during a plant outage. The high reliability of the devices used in the signal processing coupled with the CHANNEL FUNCTIONAL TEST provides confidence that the specified frequency is adequate.

SR 3.3.1.3.3

An OUTPUT CHANNEL FUNCTIONAL TEST is performed on each Function to ensure that the channels will operate as intended.

The frequency of 18 months is based on the ABWR expected refueling interval and the need to perform this surveillance under conditions that apply during a plant outage to reduce the potential for an unplanned transient if the surveillance was performed at power. The specified high reliability of the signal processing devices coupled with the DIVISION FUNCTIONAL TEST provides confidence that the specified frequency is adequate.

REFERENCES

1. DCD Tier 2, Appendix 15E, “ATWS Performance Evaluation.”

BASES

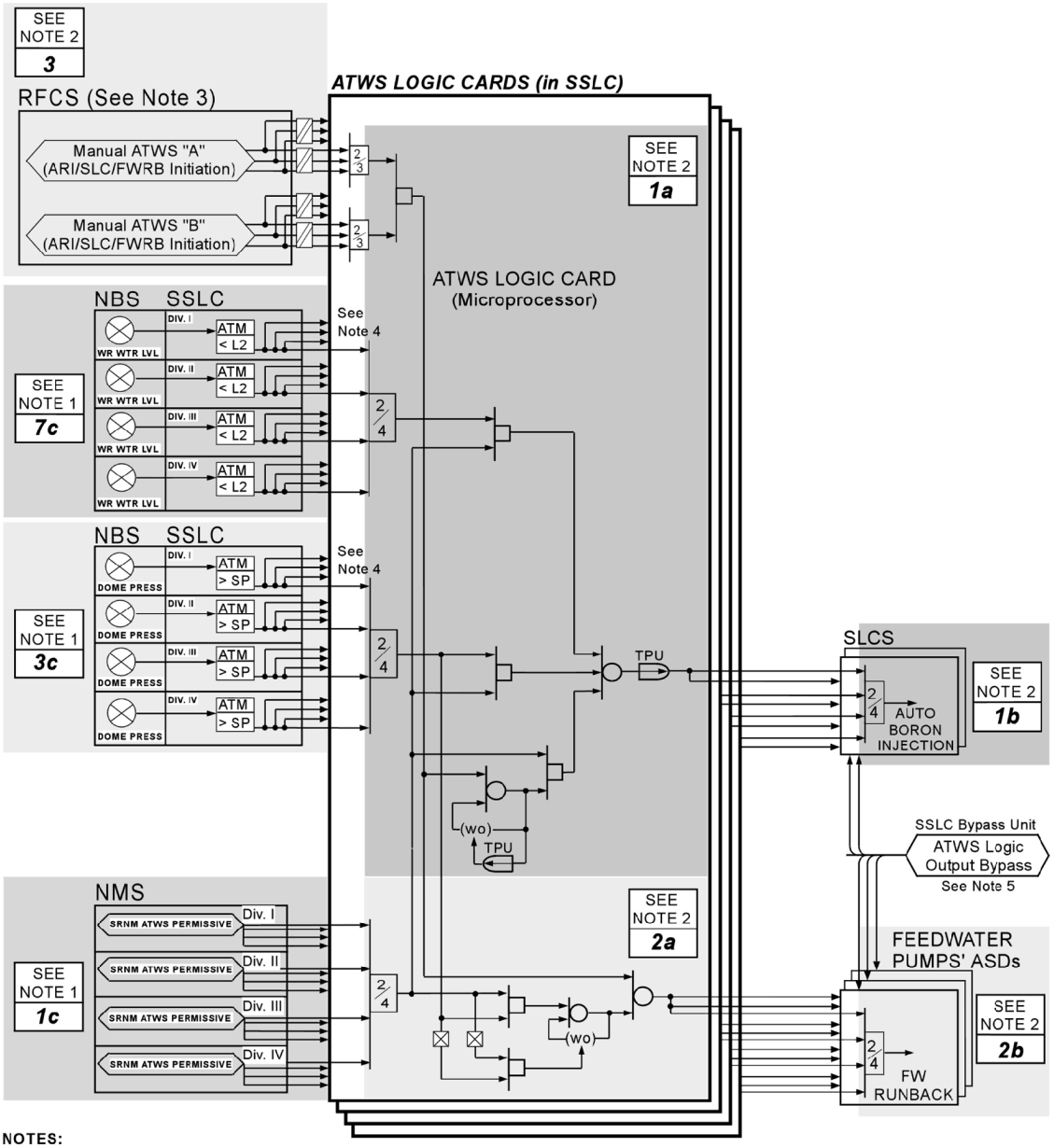

NOTES:
1. FUNCTION NUMBER AS LISTED IN TABLE 3.3.1.1-1 SSLC SENSOR INSTRUMENTATION
2. FUNCTION NUMBER AS LISTED IN TABLE 3.3.1.3-1 SLC and FWRB ACTUATION
3. FOR MANUAL ATWS-ARI FUNCTION, SEE FIGURE B 3.3.4.1-1 ATWS AND EOC-RPT INSTRUMENTATION CHANNELS
4. SSLC DIVISION-OF-SENSORS BYPASS APPLIES TO THIS VOTER
5. SAME ARRANGEMENT AS SSLC TLU OUTPUT LOGIC BYPASS BUT PERFORMED INDEPENDENTLY

FIGURE B 3.3.1.3-1 SLC and FWRB INSTRUMENTATION CHANNELS

B 3.3 INSTRUMENTATION

B 3.3.1.4 Engineered Safety Features (ESF) Actuation Instrumentation

BASES

BACKGROUND

This LCO addresses the devices needed to cause Actuation of the devices that implement protective actions for the ECCS, non-MSIV isolation, and ESF support features. The ESF actuation system automatically starts appropriate systems to protect against plant transients and accidents analyzed for the ABWR.

The ECCS systems ensure adequate core cooling following Loss of Coolant Accidents. The Emergency Core Cooling Systems (ECCS) encompasses the High Pressure Core Flooder (HPCF) system, Automatic Depressurization System (ADS), Reactor Core Isolation Cooling (RCIC) system, and the Low Pressure Flooder (LPFL) mode of the Residual Heat Removal (RHR) system. The purpose of the ECCS is to initiate appropriate responses from the systems to ensure that fuel is adequately cooled in the event of a design basis accident or transient. The equipment involved with each of these systems is described in the Bases for LCO 3.5. 1, “ECCS – Operating.”

The ESF support systems needed to assure adequate performance of the ESF systems and adequate heat removal are also covered by this LCO. A description of the systems is given in LCO B 3.3.1.1, “SSLC Sensor Instrumentation”.

The isolation actuation Functions automatically initiate closure of appropriate isolation valves when measured parameters exceed specified limits. The function of the isolation valves, in combination with other accident mitigation systems, is to limit fission product release during and following postulated Design Basis Accidents (DBAs). Valve closure within the time limits specified for those isolation valves designed to close automatically ensures that the release of radioactive material to the environment will be consistent with the assumptions used in the analyses for a DBA.

The non-MSIV isolation instrumentation provides valve closure signals for isolating the containment, Reactor Core Isolation Cooling (RCIC), Reactor Water CleanUp (CUW) system, and the Shutdown cooling mode of the Residual Heat Removal (RHR) system.

The final initiation signals for the non-MSIV valves are transmitted from the ESF DLCs to remote actuation devices (OUTPUT CHANNELS). The non-MSIV isolation valve logic is contained in divisions I, II, and III as described in LCO B 3.3.1.1, “SSLC Sensor Instrumentation”.

BASES

BACKGROUND (continued)

The ESF portion of the SSLC uses sensors, data transmission, signal processing, relays, and switches that are necessary to cause initiation of the various features needed to mitigate the consequences of a Loss of Coolant Accident (LOCA). Functional diversity is provided by monitoring a wide range of independent parameters. The input data to the ESF features originates in devices that monitor local process parameters (e.g. high temperatures, high flows) as well as primary system parameters (e.g RPV level) and containment system parameters (e.g. Drywell pressure) that are indicative of a breach in any of the various barriers provided to prevent release of fission products and maintain core integrity. The ESF control logic hardware and software for developing initiation signals are contained within the four independent, divisional panels of Safety System logic and Control (SSLC) as described in LCO B 3.3.1.1, “SSLC Sensor Instrumentation”.

A description of the operation of the ESF SENSOR CHANNELS and LOGIC CHANNELS is given in LCO 3.3.1.1, “SSLC Sensor Instrumentation”. For ECCS Functions, two channels send initiation data to an OUTPUT CHANNEL via the ECF. For ADS, the OUTPUT CHANNEL must receive initiation data from both DLCs before system actuation will occur. For LPCF, HPCF, and RCIC, there are two microprocessor channels within a single ESF DLC. One OUTPUT CHANNEL initiation data actuates the associated valve(s) and the other OUTPUT CHANNEL initiation data actuates the associated pump(s). Both the associated pump(s) and valve(s) must be initiated for activation of the function. The 2/2 output actuation logic for ADS is provided to reduce the potential for inadvertent ESF actuation and the resulting stress on plant equipment and attendant plant risk.

Except for ECCS functions, most other ESF functions are implemented using a single channel within a single DLC per division. Some ESF isolation functions are provided with redundant DLCs with a bypassable final voter (e.g., RCW Inside Drywell Isolation) to reduce the risk of plant operational impact of DLC failure.

Manual initiation capability is provided for the systems and devices addressed by this LCO. There are three manual switches for containment isolation, one each in division I, II, and III. For isolation functions implemented with redundant channels, each switch has one contact routed to both of the associated redundant channels. Together, these switches cause closure of all isolation valves, except for RCIC and MSIVs. RCIC manual isolation is provided by two independent switches in divisions I and II. The RCIC manual isolation switch logic is as described for containment isolation.

BASES

BACKGROUND (continued)

Manual ECCS injection initiation for RCIC, LPFL A, B, & C, HPCF B & C, and ESF support features are implemented as described for containment isolation. HPCF C diverse logic manual initiation uses hardwired signals that bypass the SSLC LOGIC CHANNELS including the ECF. ADS manual initiation uses two switches in each ADS division. Each switch has one contact that is routed to one member of the SLU pair associated with ADS. Both switches in one division must be pressed to open the ADS valves. The ADS manual inhibit for ATWS mitigation has one switch in each ADS division. Each switch has two contacts which are connected to the SLU pair associated with ADS in the division.

Most of the SENSOR CHANNELS required to initiate protective action are covered in LCO 3.3.1.1, “SSLC Sensor Instrumentation”. This LCO covers the Manual initiation channels, LOGIC CHANNELS, OUTPUT CHANNELS, and those SENSOR CHANNELS not addressed in LCO 3.3.1.1. The SENSOR CHANNELS, except those from the NMS, that are routed directly to the SLUs are covered by this LCO since the SLUs are part of the LOGIC CHANNEL.

CHANNEL DEFINITIONS

The channel structure for the channel types covered by this LCO are depicted in Figures B 3.3.1.4-1 through B 3.3.1.4-5. The channel structure in these Figures is similar with the basic structure as shown in Figure B 3.3.1.4-1. The channel characteristics shown in the Figures are:

Figure B 3.3.1.4-1 (Containment Isolation, ESF Support Systems);

- A single channel, including manual and automatic features, initiates the Function.

Figures B 3.3.1.4-2 (ECCS except ADS and HPCF C),
B 3.3.4.1-3 (HPCF C);

- Each of the redundant microprocessor channels is considered to be a separate channel although they originate within the same DLC.

- Figure B 3.3.1.4-3 shows the hardwired manual channel for HPCF C diverse logic which applies only to division III.

- A single switch operator provides the manual initiation signal to both manual initiation channels.

BASES

BACKGROUND (continued)

Figure B 3.3.1.4-4 (ADS);

- The OUTPUT CHANNEL consists of two load drivers in series.
- The ADS has two manual initiation switches, one ATWS Manual ADS Inhibit, and no LOGIC CHANNEL bypass capability.
- A SENSOR CHANNEL provides sensor data to both of the associated DLCs.

Figure B 3.3.1.4-5 (RCW/RSW Isolation);

- The OUTPUT CHANNEL includes two load drivers in series with the LOGIC CHANNEL bypass included in the OUTPUT CHANNEL.
- A single SENSOR CHANNEL provides sensor data to both of the associated DLCs.
- The RCW/RSW Isolation has one manual initiation switch.

Table B 3.3.1.3-1 provides a summary of the systems and features addressed by this LCO.

APPLICABLE SAFETY ANALYSIS, LCO, and APPLICABILITY

Operation of the ECCS and its support features is explicitly or implicitly assumed in the analysis of References of 1, 2, and 3. The ESF is initiated to preserve the integrity of the fuel cladding by limiting the post LOCA peak cladding temperature to less than the 10 CFR 50.46 limits. The ESF channels are required to be OPERABLE in the MODES or other specified conditions that may require ESF initiation to mitigate the consequences of a design basis accident or transient. The applicability basis for the ECCS systems are given in LCO 3.5.1, “ECCS – Operating”, and 3.5.2, “ECCS – Shutdown”. To ensure reliable ECCS initiation, a combination of features is required.

The ESF LOGIC CHANNELS and OUTPUT CHANNELs satisfy Criterion 3 of the NRC Policy Statement. Functions provided to detect a leak from a break in the reactor coolant pressure boundary also satisfy Criterion 1 of the NRC Policy Statement.

BASES

APPLICABLE SAFETY ANALYSIS, LCO, and APPLICABILITY (continued)

The isolation of flow paths from the containment and the Reactor Coolant Pressure Boundary (RCPB) are implicitly assumed in the safety analyses of References 2 and 3 to initiate closure of valves to limit offsite doses. The isolation Functions must be OPERABLE in MODES 1, 2, and 3. Refer to LCO 3.6.1.3, "Primary Containment Isolation Valves (PCIVs)," and LCO 3.3.1.1, "SSLC Sensor Instrumentation", Applicable Safety Analyses Bases, for more detail.

The OPERABILITY of the ESF actuation is dependent on the OPERABILITY of the individual Functions specified in LCO 3.3.1.1, "SSLC Sensor Instrumentation" and in this LCO. The OPERABILITY of the SENSOR CHANNEL, LOGIC CHANNEL, and OUTPUT CHANNEL Functions shown in Table 3.3.1.4-1 are covered by this LCO.

A LOGIC CHANNEL is OPERABLE when it is capable of accessing the divisional trip data from the associated SENSOR CHANNELS, using the trip data to generate device actuation data, and transmitting the actuation data to the associated OUTPUT CHANNELS.

An OUTPUT CHANNEL is OPERABLE when it is capable of receiving the actuation data from the associated LOGIC CHANNELs and converting the data to signal levels suitable for causing the associated device (pump, valve, etc) to assume its protective action state and restore the device to its normal state.

<u>1.a, 1.b, 2.a, 2.b, 3.a, 3.b. ECCS Pump Discharge Flow – Low and Pressure – High</u>

The minimum flow SENSOR CHANNELS are provided to protect the HPCF, LPFL, and RCIC pumps from overheating when the pump is operating and the flow through the normal injection path is insufficient to provide adequate pump cooling. The minimum flow valve is opened when pump discharge pressure is high enough to indicate pump operation and the flow is low enough to indicate the potential for inadequate cooling. The minimum flow valve is automatically closed when the flow rate is adequate to protect the pump. For the HPCF pumps, the minimum flow valve is also closed when discharge pressure is low.

These Functions are assumed to be OPERABLE and capable of closing the minimum flow valves in the transients and accidents analyzed in References 1, 2, and 3. The core cooling function of the ECCS, along with the scram action of the RPS, ensures that the fuel peak cladding temperature remains below the limits of 10 CFR 50.46.

BASES

APPLICABLE SAFETY ANALYSIS, LCO, and APPLICABILITY (continued)

One flow and one pressure transmitter per pump are used to detect the associated subsystem discharge pressure to verify operation of the pump. Note that these pressure transmitters are not the same as the ones used in the ADS permissive described in B 3.3.1.1, “SSLC Sensor Instrumentation”. Data values representing pressure and flow are received by the ESF DLCs associated with the pump initiation division via the ECF in the same division. The data values are compared to the respective setpoints in the ESF DLC to determine if the associated minimum flow valve is to be closed or opened.

The ECCS System Flow Rate – Low Allowable Values are high enough to ensure that pump flow rate is sufficient to protect the pump, yet low enough to ensure that the closure of the minimum flow valve is initiated to allow full flow into the core. The ECCS Pump Discharge Pressure – High Allowable Values are set high enough to ensure that the valve will not be open when the pump is not operating.

One channel of these Functions for each pump are required to be OPERABLE when the associated ECCS is required to be OPERABLE, to ensure that no single instrument failure can preclude the ECCS function. Refer to LCO 3.5.1, “ECCS – Operating” and LCO 3.5.2, “ECCS – Shutdown” for Applicability Bases for the ECCS subsystems.

2.c. HPCF Pump Suction Pressure – Low

The HPCF low suction pressure SENSOR CHANNEL is provided to protect the pump from damage due to cavitation. If the suction pressure is less than the pump NPSH requirement, the pump start will be inhibited.

The suction pressure data originates in a pressure transmitter and is sent via the ECF to the ESF DLCs in the division that controls the HPCF pump being monitored. The DLC logic is arranged so that Low suction pressure must exist for a specified amount of time before pump start will be inhibited to prevent spurious inhibits due to suction pressure transients. The HPCF low suction pressure signal must be manually reset. The HPCF Suction Pressure – Low Function is assumed to be OPERABLE and will not cause a spurious pump start inhibit during the transients and accidents analyzed in References 1, 2, and 3.

The HPCF Suction Pressure – Low Allowable Value is selected to assure that there is sufficient NPSH for the pump and prevent spurious start inhibits due to normal fluctuations in suction pressure.

BASES

APPLICABLE SAFETY ANALYSIS, LCO, and APPLICABILITY (continued)

One channel of this Function for each HPCF system is required to be OPERABLE when the HPCF is required to be OPERABLE. Refer to LCO 3.5.1, “ECCS – Operating” and LCO 3.5.2, “ECCS – Shutdown” for HPCF Applicability Bases.

1.c, 2.d, 3.c, 4.a. ECCS Systems Initiation.

These Functions are the LOGIC CHANNELS that send initiation data to the OUTPUT CHANNELS for the ECCS systems. The LOGIC CHANNELS for a specific ECCS subsystem are in the same division as the subsystem. Two LOGIC CHANNELS must be OPERABLE when the associated ECCS feature is required to be OPERABLE. The applicability basis for the ECCS systems are given in LCO 3.5.1, “ECCS – Operating”, and LCO 3.5.2, “ECCS – Shutdown”. A LOGIC CHANNEL is OPERABLE when it is capable of generating device actuation data and transmitting it to the OUTPUT CHANNELS.

1.e, 2.f, 3.e. ECCS System Injection Manual Initiation – Except HPCF C.

The Manual Initiation push button channels introduce signals into the appropriate ECCS logic to provide manual initiation capability that is redundant to the automatic initiation SENSOR CHANNELS. Manual initiation data is acquired by each LOGIC CHANNEL that controls the ECCS pumping subsystem, except for HPCF C diverse logic. HPCF C diverse logic Manual Initiation is hardwired to provide a diverse means of ECCS initiation. For each function, both LOGIC CHANNELS must be OPERABLE for the associated Manual Initiation Function to be OPERABLE.

The Manual Initiation Function is not assumed in any accident or transient analyses for the ABWR. However, the Function is retained for overall redundancy and diversity of the ECCS features as required by the NRC in the plant licensing basis.

There is no Allowable Value for this Function since it is mechanically actuated based solely on the position of the manual initiation switches. Two channels of the Manual Initiation Function for each ECCS pump, except HPCF C diverse logic, are required to be OPERABLE when the associated ECCS is required to be OPERABLE. Refer to LCO 3.5.1, “ECCS – Operating” and LCO 3.5.2, “ECCS – Shutdown” for Applicability Bases for the ECCS subsystems.

BASES

APPLICABLE SAFETY ANALYSIS, LCO, and APPLICABILITY (continued)

2.g. HPCF C Diverse Logic Manual Initiation

The HPCF C Diverse Logic Manual Initiation channel completely bypasses the SSLC channels (see figure B 3.3.1.4-3) and provides direct control of the actuated devices. One manual pushbutton causes HPCF C to align for injection and initiates the pump start sequence.

The HPCF C Diverse Logic Manual Initiation Function is not assumed in any accident or transient analyses for the ABWR. However, the Function is retained for overall redundancy and diversity of the ECCS features as required by the NRC in the plant licensing basis.

There is no Allowable Value for this Function since it is mechanically actuated based solely on the position of the manual switch. One channel of the HPCF C Diverse Logic Manual Initiation Function is required to be OPERABLE when HPCF C is required to be OPERABLE. Refer to LCO 3.5.1, “ECCS – Operating” and LCO 3.5.2, “ECCS-Shutdown” for Applicability Bases for the ECCS subsystems.

4.b. ADS Device Actuation

Each ADS valve has two OUTPUT CHANNELS and an associated solenoid valve (i.e., each ADS valve has two solenoid valves with the “A” solenoid valve actuated from the ADS division I OUTPUT CHANNEL and the “B” solenoid valve actuated from the ADS division II OUTPUT CHANNEL). Energizing either of the OUTPUT CHANNELS will cause the valve to open. Each OUTPUT CHANNEL receives an appropriate signal from the associated LOGIC CHANNEL when a protective action is required. Two OUTPUT CHANNELS must be OPERABLE when ADS is required to be OPERABLE. The channels are OPERABLE when they are capable of going to the state needed to perform the protective action and recovering to the normal state.

The ADS OUTPUT CHANNEL is inoperable when either of the two load drivers connected to a solenoid is inoperable.

BASES

APPLICABLE SAFETY ANALYSIS, LCO, and APPLICABILITY (continued)

4.c. ADS Manual Initiation

The Manual Initiation push button channels introduce signals into the ADS logic to provide manual initiation capability that is redundant to the automatic SENSOR CHANNELS. There are two push buttons for each ADS division trip system (total of four pushbuttons). Each member of the SLU pair used to implement ADS acquires data from one of the switches (see Figure B 3.3.1.4-4). The manual actuation data is acquired by the SLUs that control the ADS subsystems. Both switches associated with one of the ADS divisions must be activated to initiate ADS in that division.

The Manual Initiation Function is not assumed in any accident or transient analyses for the ABWR. However, the Function is retained for overall redundancy and diversity of the ADS function as required by the NRC in the plant licensing basis.

There is no Allowable Value for this Function since it is mechanically actuated based solely on the position of the push buttons. Two channels of the Manual Initiation Function in each ADS division are required to be OPERABLE when the ADS is required to be OPERABLE. Refer to LCO B 3.5.1, “ECCS – Operating” for ADS Applicability Bases.

4.d and e. ADS Division I/Division II ECCS Pump Discharge Pressure – High (permissive)

The Pump Discharge Pressure – High signals from the LPFL and HPCF pumps are used as permissives for ADS initiation to provide confidence that there is a source available to restore vessel water inventory prior to initiating reactor blowdown. This Function is assumed to be OPERABLE and capable of permitting ADS initiation during the events analyzed in Reference 2. For these events, the ADS depressurizes the reactor vessel so that the low pressure ECCS can perform the core cooling functions. The core cooling function of the ECCS, along with the scram action of the RPS, ensures that the fuel peak cladding temperature remains below the limits of 10 CFR 50.46.

Pump discharge pressure data originates in two pressure transmitters on the discharge side of each of the three low pressure and two high pressure ECCS pumps. The data from one transmitter on each pump is sent to the ESF DLCs associated with ADS 1 and the data from the second transmitter is sent to the ESF DLCs associated with ADS 2. The DLC logic will declare an ADS permissive if any one of the 5 pressure values are above their respective setpoints.

BASES

APPLICABLE SAFETY ANALYSIS, LCO, and APPLICABILITY (continued)

The Pump Discharge Pressure – High Allowable Value is less than the pump discharge pressure when the pump is operating with full flow and above the maximum expected pressure that can occur when the pumps are running and the valves are aligned for injection. The actual operating point of this Function is not explicitly assumed in any ABWR safety analysis but is implicitly assumed in any analysis that assumes ADS initiates.

Five ECCS Pump Discharge Pressure - High SENSOR CHANNELS in each ADS division are required to be OPERABLE to provide confidence that no single instrument failure can preclude ADS initiation on a valid condition. The SENSOR CHANNELS are required to be OPERABLE when ADS is required to be OPERABLE. Refer to LCO 3.5.1, "ECCS – Operating" for ADS Applicability Bases.

4.f. ATWS Manual ADS Inhibit

The ATWS Manual ADS Inhibit push button channels introduce signals into the ADS logic to provide manual ADS inhibit capability that is redundant to the automatic SENSOR CHANNELS. There is one push button for each ADS division trip system. Both DLCs used to implement ADS within a division acquire data from the switch in its division (see Figure B 3.3.1.4-4).

The ATWS Manual ADS Inhibit Function is not assumed in any accident or transient analyses for the ABWR. However, the Function is retained for overall redundancy and diversity of the ADS function as required by the NRC in the plant licensing basis.

There is no Allowable Value for this Function since it is mechanically actuated based solely on the position of the push buttons. Four channels of this Function (two per ADS division) are required to be OPERABLE when ATWS is required to be OPERABLE. Refer to 3.3.1.3, "SLC and FWRB Actuation" for ATWS Applicability Bases.

5.a, 5.b, 7.d, 7.e. Divisions I, II, & III Loss of Voltage – 4.16 kV and Degraded Voltage – 4.16 kV.

The 4.16 kV busses are monitored to detect a loss of the offsite power or degraded bus conditions. If the bus voltage is less then required to support ESF features, the associated emergency Diesel-Generator (DG), provided as a back up to the offsite power source, is started. These SENSOR CHANNELS are provided to assure that there is sufficient power available to supply safety systems should they be needed. This Function is assumed in the loss of offsite power analysis of reference 3.

BASES

APPLICABLE SAFETY ANALYSIS, LCO, and APPLICABILITY (continued)

The RCW/RSW system is also started on these Functions since it provides cooling for the diesels.

The signals for this Function originate in undervoltage relays connected to each phase of the 4.16 kV bus. The phases are connected so that the loss of a single phase will cause two of the undervoltage relays to trip. The three undervoltage relays are combined in 2/3 logic so that a loss of any phase will cause starting of the associated DG while a failure in one of the relays will not cause a spurious start. A time delay is provided to prevent starting the DG due to transient conditions on the bus.

The undervoltage relay trip signals are transmitted to the DLCs in the associated division via the ECF. Three channels of this Function are required to be OPERABLE in each of divisions I, II, & III in order to cause start of the associated DG on a valid signal. The Functions must be operable in MODES 1, 2, and 3 and in MODES 4 and 5 when any ECCS system is required to be OPERABLE as described in LCO 3.8.2, “AC Sources – Shutdown” and LCO 3.8.11, “AC Sources – Shutdown (Low Water Level)”.

The Allowable values are selected high enough to detect degradation in offsite power to the point where it cannot supply the loads but low enough to assure that normal transients do not cause a spurious DG start. The degraded voltage Function uses a higher voltage set point but a longer time delay than the loss of voltage Function.

5.c Diesel Generator Initiation.

The Diesel Generators (DG) are used to supply emergency back up power to the ESF systems. The division II and III DGs receive a start signal when HPCF is initiated and all three divisions receive a start signal when the LPFL’s are initiated. Each DG also receives a start signal from the divisional 4.16 KV bus monitors.

The DGs LOGIC CHANNELS are required to be OPERABLE in MODES 1, 2, 3, and in MODE 4 and 5 when the associated DG’s are required to be OPERABLE.

BASES

APPLICABLE SAFETY ANALYSIS, LCO, and APPLICABILITY (continued)

5.e Diesel Generator Manual Initiation.

The Manual Initiation push button channels introduce signals into the appropriate ESF feature logic to provide manual initiation capability that is redundant to the automatic initiation SENSOR CHANNELS. There is one push button for each of the ESF features with manual initiation capability. The manual initiation data is acquired by the DLC that controls the ESF feature.

The ESF Manual Initiation Function are not assumed in any accident or transient analyses for the ABWR. However, the Function is retained for overall redundancy and diversity of the ESF as required by the NRC in the plant licensing basis.

There is no Allowable Value for this Function since it is mechanically actuated based solely on the position of the manual initiation switches. Each channel of the Manual Initiation Function is required to be OPERABLE when the associated ESF feature is required to be OPERABLE.

6.a Standby Gas Treatment System Initiation.

The Standby Gas Treatment (SGTS) systems removes radioactive gases from the containment atmosphere following a LOCA. The OPERABILITY of the SGTS is implicitly assumed in plant offsite dose calculations.

The SGTS system is initiated on high drywell pressure, low Level 3, Reactor Building Area Exhaust Radiation - High, or Fuel Handling Area Exhaust Radiation - High. This LOGIC CHANNEL Function is required to be OPERABLE in MODES 1, 2, and 3, during CORE ALTERATIONS, during operations with the potential for draining the reactor vessel, and during movement of irradiated fuel assemblies in the containment since these are the MODES and other conditions where the SGTS is required to be OPERABLE.

7.a. Reactor Building Cooling Water/Reactor Service Water Initiation.

This Function is included to provide confidence that the HVAC needed to support ESF systems is within the design basis. The initiation occurs on high drywell pressure, low Level 1, or 4.16 KV emergency bus monitors. This Function is not explicitly assumed in any accident or transient analysis for the ABWR. These signals, or suppression pool high temperature, also initiate shedding of non-essential loads.

BASES

APPLICABLE SAFETY ANALYSIS, LCO, and APPLICABILITY (continued)

This LOGIC CHANNEL Function is required to be OPERABLE in MODES 1, 2, & 3 and in MODE 4 and 5 when the DGs are required to be OPERABLE.

7.c RCW/RSW Manual Initiation

The Manual Initiation push button channels introduce signals into the appropriate ESF feature logic to provide manual initiation capability that is redundant to the automatic initiation SENSOR CHANNELS. There is one push button for each of the RCW/RSW manual initiation channels. The manual initiation data is acquired by the DLC that controls the ESF feature.

The ESF Manual Initiation Functions are not assumed in any accident or transient analyses for the ABWR. However, the Function is retained for overall redundancy and diversity of the ESF as required by the NRC in the plant licensing basis.

There is no Allowable Value for this Function since it is mechanically actuated based solely on the position of the manual initiation switches. Each channel of the Manual Initiation Function is required to be OPERABLE when the associated ESF feature is required to be OPERABLE.

8.a. Containment Atmospheric Monitoring System Initiation.

The Containment Atmospheric Monitoring (CAM) system provides indications of the activity level of combustible gases and gamma activity in the containment following a LOCA. The CAM system's primary purpose is for post accident monitoring. The CAM system is automatically started on a high drywell pressure or low Level 1 signal. Two CAM systems are provided, one in division I and one in division II. The OPERABILITY of the CAM is not assumed in any ABWR transient or accident analysis.

The CAM automatic start LOGIC CHANNEL Function must be OPERABLE in MODES 1, 2 & 3 since these are the MODES where the CAM system is required to be operable.

BASES

APPLICABLE SAFETY ANALYSIS, LCO, and APPLICABILITY (continued)

9.a. Suppression Pool Cooling Initiation.

Suppression pool cooling is included to provide confidence that containment overpressure will not occur. Therefore, this Function is automatically initiated on high suppression pool temperature to minimize the burden on the operator. Automatic suppression pool cooling initiation is not assumed in the safety analysis but the instrumentation logic is processed in SSLC.

The suppression pool cooling LOGIC CHANNEL Function must be OPERABLE in MODES 1, 2, & 3 since these are the MODES where suppression pool cooling is required to be OPERABLE.

9.c Suppression Pool Cooling Manual Initiation

The Manual Initiation push button channels introduce signals into the appropriate ESF feature logic to provide manual initiation capability that is redundant to the automatic initiation SENSOR CHANNELS. There is one push button for each of the suppression pool cooling manual initiation channels. The manual initiation data is acquired by the DLC that controls the ESF feature.

The ESF Manual Initiation Functions are not assumed in any accident or transient analyses for the ABWR. However, the Function is retained for overall redundancy and diversity of the ESF as required by the NRC in the plant licensing basis.

There is no Allowable Value for this Function since it is mechanically actuated based solely on the position of the manual initiation switches. Each channel of the Manual Initiation Function is required to be OPERABLE when the associated ESF feature is required to be OPERABLE.

10.a, 10.e, 10.g, 13.a, and 14.a Isolation Initiation.

These Functions are the LOGIC CHANNELS that send initiation data to the OUTPUT CHANNELS for the various isolation valves. The channels provide actuation signals for each of the isolation valves in the same division. The sensor Functions for each of the isolation valves are as described in LCO 3.3.1.1, “SSLC Sensor Instrumentation”.

BASES

APPLICABLE SAFETY ANALYSIS, LCO, and APPLICABILITY (continued)

For Functions 10.a, 10.g, 13.a, and 14.a, one LOGIC CHANNEL must be OPERABLE in each division with isolation capability when the associated isolation Function is required to be OPERABLE. See LCO 3.3.1.1, "SSLC Sensor Instrumentation" for the basis and the divisions associated with each isolation function. A LOGIC CHANNEL is OPERABLE when it is capable of generating initiation data and transmitting it to the associated OUTPUT CHANNELs.

Function 10.e is implemented using two DLCs with a final bypassable voter. The two DLCs, the voters, and the bypasses are treated as a separate channel. The channel is OPERABLE if both of the DLCs and the voters are OPERABLE, or if one of the two DLCs are OPERABLE with the second DLC bypassed so that the OPERABLE channel can initiate isolation action.

10.c & 10.d. Drywell Sump Drain Line LCW/HCW Radiation - High

The drywell drain lines to the radwaste system are monitored for high radiation in the discharged liquid using one detector in each of the drain lines. High activity in the drain lines could result in excessive radioactivity in the radwaste collection tanks. If the high activity flow continues without isolation, offsite dose limits may be reached. This Function also provides a diverse indication of primary coolant activity. Credit for these Functions is not taken in any transient or accident analysis for the ABWR. However, the Function is retained for the overall redundancy and diversity as required by the NRC approved licensing basis.

The detectors are connected to the PRRM system which sends a trip signal to the division I DLC. The Allowable value is selected to be consistent with primary coolant activity limits. One channel of each of the Functions is required to be OPERABLE in MODES 1, 2, and 3 consistent with the Applicability for LCO 3.6.1.1, "Primary Containment."

11. Containment Isolation Manual Initiation

The Manual Initiation push button channels introduce signals into the containment isolation logic to provide manual initiation capability that is redundant to the automatic SENSOR CHANNELS.

There is a push button in each division that provides containment isolation initiation. Each divisional manual isolation pushbutton causes closure of all isolation valves in the division, except for RCIC.

BASES

APPLICABLE SAFETY ANALYSIS, LCO, and APPLICABILITY (continued)

The Manual Initiation Function is not assumed in any accident or transient analyses for the ABWR. However, the Function is retained for overall redundancy and diversity of the ADS function as required by the NRC in the plant licensing basis.

There is no Allowable Value for this Function since the division is mechanically actuated based solely on the position of the push buttons. Two channels of the Manual Isolation Initiation Functions in each division that contains isolation initiation are required to be OPERABLE when the associated isolation Function is required to be OPERABLE.

12.a RCIC Isolation Initiation.

These Functions are the LOGIC CHANNELS that send initiation data to the OUTPUT CHANNELS for the RCIC isolation valves. The channels provide actuation signals for each of the isolation valves in the same division. The sensor Functions for the RCIC isolation valves, except for RCIC Turbine Exhaust Pressure – High, are as described in LCO 3.3.1.1, “SSLC Sensor Instrumentation”.

One LOGIC CHANNEL must be OPERABLE in each RCIC isolation division (divisions I and II) when the associated isolation Function is required to be OPERABLE. See LCO 3.3.1.1, “SSLC Sensor Instrumentation” for the basis. A LOGIC CHANNEL is OPERABLE when it is capable of generating initiation data and transmitting it to the associated OUTPUT CHANNELs.

12.c. RCIC Isolation Manual Initiation

The RCIC Manual Initiation push button channels introduce signals into the RCIC isolation logic to provide manual initiation capability that is redundant to the automatic SENSOR CHANNELS. There are two independent RCIC isolation push buttons. The division I pushbutton controls the inboard valves and the division II pushbutton controls the outboard valves.

Each divisional manual isolation pushbutton causes closure of all the RCIC isolation valves in the division. Either of the pushbuttons causes isolation of all isolated flow paths within RCIC system.

The Manual Initiation Function is not assumed in any accident or transient analyses for the ABWR. However, the Function is retained for overall redundancy and diversity of the ADS function as required by the NRC in the plant licensing basis.

BASES

APPLICABLE SAFETY ANALYSIS, LCO, and APPLICABILITY (continued)

There is no Allowable Value for this Function since the division is mechanically actuated based solely on the position of the push buttons. One channel of the RCIC Manual Isolation Initiation Function is required to be OPERABLE in each RCIC isolation division when RCIC isolation is required to be OPERABLE.

12.d. RCIC Turbine Exhaust Pressure – High

High turbine exhaust pressure indicates that the pressure may be too high to continue operation of the RCIC turbine. This isolation is for equipment protection and is not assumed in any transient or accident analysis for the ABWR. These instruments are included in the TS because of the potential for risk due to possible failure of the instruments preventing RCIC initiations.

1.d, 2.e, 3.d, 5.d, 6.b, 7.b, 8.b, 9.b, 10.b, 10.f, 10.h, 12.b, 13.b, 14.b and 15.b. ESF and Isolation Device Actuation.

These Functions are the OUTPUT CHANNELS that cause the devices (e.g. pumps, valves) to begin performing their intended plant protective action. There is an OUTPUT CHANNEL connected to each actuated device that causes the device state to change to the state suitable for its protective Function. Each output receives an appropriate signal from the associated LOGIC CHANNEL when a protective action is required. These Functions are implicitly assumed in any ABWR safety analysis that assumes operability of the associated feature.

The OUTPUT CHANNEL Functions must be OPERABLE when the associated ESF or isolation feature is required to be OPERABLE. The channels are OPERABLE when they are capable of going to the state needed to perform the protective action and recovering to the normal state.

13.c. CUW Isolation on SLC Initiation

Isolation of the CUW System is required when the SLC System has been initiated to prevent dilution and removal of the boron solution by the CUW System (Reference 4). SLC System initiation signals originate from the two SLC pump start signals. The SLC pump A start signal is connected to a division I DLC and the SLC pump B signal to a division II DLC. The data is shared between division via suitable isolators. CUW isolation occurs when either pump is started.

BASES

APPLICABLE SAFETY ANALYSIS, LCO, and APPLICABILITY (continued)

There is no Allowable Value associated with this Function since it is discrete data based on the state of the SLC System operation detector.

One channel per division of the SLC Initiation Function are required to be OPERABLE only in MODES 1 and 2, since these are the only MODES where the reactor can be critical, and these MODES are consistent with the Applicability for the SLC System (LCO 3.1.7).

15.a. Feedwater Line Break Mitigation Initiation.

These Functions are the LOGIC CHANNELS that send initiation data to the OUTPUT CHANNELS for the Feedwater Line Break Mitigation Actuation (e.g., trip of the condensate pumps). The LOGIC CHANNEL for a specific condensate pump is in the same division as the condensate pump. One LOGIC CHANNEL must be OPERABLE when the associated condensate pump is required to be OPERABLE. The applicability basis for the Feedwater Line Break Mitigation are given in LCO 3.3.1.1, “SSLC Sensor Instrumentation.” A LOGIC CHANNEL is OPERABLE when it is capable of generating device actuation data and transmitting it to the OUTPUT CHANNELS.

Feedwater line break mitigation initiation is required to be OPERABLE in MODES 1, 2 and 3 consistent with the Applicability of LCO 3.3.1.1, “SSLC Sensor Instrumentation.”

ACTIONS

A Note has been provided to modify the ACTIONS. Section 1.3, Completion Times, specifies that once a Condition has been entered, subsequent trains, subsystems, components, or variables expressed in the Condition, discovered to be inoperable or not within limits, will not result in separate entry into the Condition. Section 1.3 also specifies that Required Actions of the Condition continue to apply for each additional failure, with Completion Times based on initial entry into the Condition. However, the Required Actions for inoperable ESF and isolation channels provide appropriate compensatory measures for multiple inoperable divisions. As such, a Note has been provided that allows separate Condition entry for each inoperable ESF or isolation channel.

A.1

Required Action A.1 directs entry into the appropriate Condition referenced in Table 3.3.1.1-1 for failures in one or more channels of one or more Functions. The applicable Condition specified in the Table is Function and MODE or other specified condition dependent and may change as the Required Action of a previous Condition is completed.

BASES

ACTIONS (continued)

Each time the entry condition is met, Condition A will be entered for that channel/division and provides for transfer to the appropriate subsequent Condition.

B.1

This condition assures that appropriate actions are taken when one or more ESF LOGIC CHANNELS or one or more ESF OUTPUT CHANNELS is inoperable.

The 1 hour Completion Time for B.1 is allowed for restoring the inoperable channel. The probability of an event requiring the Function coupled with an undetected failure in the associated redundant channel with the Completion Time is low. Also, redundant ESF features may provide adequate plant protection given the availability of the associated features.

This Action applies to all ECCS LOGIC CHANNELS and OUTPUT CHANNELS, except ADS. This Action also applies to all ESF LOGIC CHANNELS and OUTPUT CHANNELS.

C.1

This Condition is provided to assure that appropriate action is taken for single or multiple inoperable SENSOR CHANNELS that cause automatic or manual actuation of an ESF feature to become unavailable. However, automatic and manual initiation for redundant features are not affected.

Action C.1 restores the intended plant protection capability. The 1 hour Completion Time for Action C.1 provides some amount of time to restore automatic or manual actuation before additional Required Actions are imposed.

This Action applies to

- ECCS Pump Discharge Flow – Low and Pressure – High channels
- HPCF Pump Suction Pressure – Low channel
- Divisions I, II, & III Loss of Voltage – 4.16 kV and Degraded Voltage – 4.16 kV.

BASES

ACTIONS (continued)

D.1 and D.2

This Condition is provided to assure that appropriate action is taken for inoperable OUTPUT CHANNELS or an inoperable HPCF C diverse logic manual initiation channel. An inoperable OUTPUT CHANNEL makes the associated device (pump, valve, etc.) unable to perform its protective action.

Required Action D.1 restores the actuation capability for the devices that cannot be actuated as a result of the failure. Action D.2 provides an alternate to D.1 for the devices listed in a note in the LCO. Actuating the associated device is equivalent to the channel performing its intended Function and will place the associated device in the configuration needed to perform its protective action. Actuating the associated device cannot be performed if it would result in unacceptable plant operation or plant status.

The 1 hour Completion Time for Action D.1 provides some amount of time to restore automatic or manual actuation before additional Required Actions are imposed. The 1 hour Completion Time for Action D.2 provides some amount of time for the operator to determine if the associated device can be actuated.

Action D.1 applies to OUTPUT CHANNELS and device actuation for DG actuation, SGTS actuation, RCW/RWS actuation, CAM actuation, CIV isolation, RCW Inside Drywell isolation, RCIC isolation, CUW isolation, and SD Cooling isolation. Action D.2 applies to the isolation valves that can be closed without disrupting plant operation or jeopardizing plant safety.

E.1 and E.2

This Condition addresses SENSOR CHANNEL failures for isolation SENSOR CHANNEL Functions that have one or two channels. For these Functions a failure in the SENSOR CHANNEL causes loss of automatic initiation or the initiation logic becomes 1/1. However, manual initiation is still available.

Action E.1 requires restoration of the inoperable channel to OPERABLE status. Action E.2 provides an alternate of declaring the associated device(s) inoperable.

BASES

ACTIONS (continued)

E.1 and E.2 (continued)

The Completion Times are sufficient to perform the Required Actions and are acceptable because there is a low probability of an event requiring the Functions within the time period. Also, manual actuation capability is retained.

These Actions apply only to the Drywell Sump Drain Line LCW/HCW Radiation - High and CUW Isolation on SLC Initiation Functions since these are the isolation Functions with one SENSOR CHANNEL.

F.1

This Condition is provided to assure that appropriate action is taken for one or more inoperable manual initiation channels. The loss of a manual initiation channel for both one channel and two channel Functions causes loss of the system manual initiation. However, automatic initiation is still available and the systems may still be manually operated using the individual device manual controls.

Required Action F.1 restores manual initiation capability for the associated system or subsystem. The 7 day Completion Time is based on the specified high reliability of the automatic initiation devices, the low probability of an event requiring the devices coupled with automatic initiation failure within that time frame, and the device level manual control capability that is separate from the system level manual initiation. Note that the device level manual controls are accompanied by a system status display.

This Action applies to all ECCS and ESF manual initiation channels, except the ADS and the HPCF C diverse logic. ADS manual initiation channels are addressed in Conditions H and I. HPCF C diverse logic manual initiation channel is addressed in Condition D.

G.1

If the specified actions for Conditions B, C, D, E or F are not met within the specified Completion Times the feature(s) associated with the inoperable channel must be declared inoperable. Declaring the associated feature inoperable will cause entry into the appropriate LCOs that address the feature so appropriate compensatory measures will be taken.

This Action applies to those Functions where Conditions B, C, D, E, or F are applicable.

BASES

ACTIONS (continued)

H.1

This condition assures appropriate compensatory measures are taken for failures in an ADS OUTPUT CHANNEL in one ADS division, an ADS LOGIC CHANNEL in one division, an ADS manual initiation channel in one division, an ATWS Manual ADS Inhibit channel in one division, or all of the ADS Division I/II ECCS Pump Discharge Pressure – High (permissive) Functions in one division. For these failures the ADS Function is still available, but the redundancy is reduced, (i.e. logic is 1/1 instead of 1/2). The high pressure ECCS pumps are still capable of providing core cooling and inventory make up. In addition, there are manual controls for the relief solenoid on the SRVs that are independent of the ELCS ADS logic and devices. The relief solenoids do not share any signal processing devices with ADS and are powered from three divisional 125 VDC sources. Therefore, there is a high degree of diversity to protect against a small break LOCA.

Action H.1 restores the channel(s) to OPERABLE status. When two or more high pressure ECCS systems are OPERABLE there is a high degree of redundancy and diversity so operation is permitted for 7 days. If only one high pressure system is OPERABLE the Completion Time is reduced to 3 days. These Completion Times are acceptable because of the specified high reliability of the devices used in the ELCS logic and SRV manual relief, the redundancy in ADS valves (i.e. 8 ADS valves, 5 needed for accident mitigation), and the low probability of an event requiring ADS, coupled with a failure that would defeat a redundant ADS Function and a failure in all high pressure ECCS sub-systems, occurring within that time period.

This Action applies to the ADS LOGIC CHANNELS, ADS OUTPUT CHANNELS, ADS manual initiation channels, ATWS manual ADS inhibit channels, and the ADS Division I/II ECCS Pump Discharge Pressure – High (permissive) channels.

I.1

This condition assures that appropriate compensatory measures are taken for conditions of:

- two divisions with one or more inoperable ADS LOGIC CHANNELS
- two divisions with one or more inoperable ADS OUTPUT CHANNELS
- two divisions with one or more inoperable ADS manual initiation channels.

BASES

ACTIONS (continued)

I.1 (continued)

- two divisions with one or more inoperable ATWS manual ADS Inhibit channels.

For ADS, the LOGIC CHANNELS and OUTPUT CHANNELS cannot be tripped or bypassed so the associated valves must be declared inoperable for these conditions. This condition is also entered if the required Action and associated Completion Time of Condition H is not met.

The Completion Time provides adequate time for the operator to complete the action. The Completion Time is acceptable because the probability of an event requiring the feature coupled with failures in redundant features within the time frame is low.

This Action applies to the ADS LOGIC CHANNELS, the ADS OUTPUT CHANNELS, the ADS manual channels, and the ATWS manual ADS Inhibit channels.

J.1

This condition occurs when one or two of the ECCS pump pressure permissive SENSOR CHANNELS associated with an ADS division become inoperable. The logic for the ADS permissive will change from 1/5 to 1/4 or 1/3. Therefore, a high degree of SENSOR CHANNEL redundancy is maintained.

Action J.1 restores all required SENSOR CHANNELS for the Function to the OPERABLE status. All divisions of ADS initiation logic remain OPERABLE and a single failure will not result in loss of protection. In addition, the specified self test features provide confidence that most additional failures will be automatically detected. This is an acceptable long term condition so the Completion Time specified for repair corresponds to a maximum time equal to the refueling interval. However, the LCO requires the repairs to be completed if a cold shutdown occurs prior to the next refueling outage.

This Action applies only to the ADS Division I/II ECCS Pump Discharge Pressure - High (permissive) Functions on a divisional basis.

BASES

ACTIONS (continued)

K.1

This condition occurs when three of the ECCS pump pressure permissive SENSOR CHANNELS associated with an ADS division become inoperable. For this condition the logic for the ADS permissive becomes 1/2 so the degree of redundancy is reduced to some extent. However, all divisions of ADS initiation logic remain OPERABLE for this condition and a single SENSOR CHANNEL failure will not result in loss of automatic ADS initiation.

Action K.1 restores at least three of the required SENSOR CHANNELS for the Function to the OPERABLE status. The completion time of 7 days is based on the low probability of undetected failures in both of the OPERABLE channels for the Function occurring in that time period. The self-test features of the ELCS, NMS, and ECF provide a high degree of confidence that no undetected failure will occur.

This Action applies only to the ADS Division I/Division II ECCS Pump Discharge Pressure - High (permissive) Functions on a divisional basis.

L.1

This condition occurs when four of the ECCS pump pressure permissive SENSOR CHANNELS associated with one or both ADS division become inoperable. For this condition the logic for the ADS permissive becomes 1/1 in both divisions so a single failure in the remaining OPERABLE SENSOR CHANNEL for the Function in either division will cause loss of automatic ADS initiation in that division.

Action L.1 restores at least two of the required SENSOR CHANNELS for the Function to the OPERABLE status. The completion time of 24 hours is based on the low probability of undetected failures in the remaining OPERABLE channel for the Function occurring in that time period. The self-test features of the ELCS, NMS, and ECF provide a high degree of confidence that no undetected failures will occur.

This Action applies only to the ADS Division I/Division II ECCS Pump Discharge Pressure - High (permissive) Functions on a divisional basis.

BASES

ACTIONS (continued)

M.1

This condition occurs when all of the ECCS pump pressure permissive SENSOR CHANNELS in both ADS divisions become inoperable. For this Condition automatic ADS initiation is unavailable.

Action M.1 requires all ADS valves to be immediately declared inoperable, which will cause the LCO for inoperable ADS valves to be invoked, and appropriate compensatory actions taken.

This Action is also invoked if the Completion Times of Actions J, K, or L are not met.

This Action applies only to the ADS Division I/Division II ECCS Pump Discharge Pressure - High (permissive) Functions.

SURVEILLANCE REQUIREMENTS

SR 3.3.1.4.1

Performance of the SENSOR CHANNEL CHECK provides confidence that a gross failure of a device in a SENSOR CHANNEL has not occurred. A SENSOR CHANNEL CHECK is a comparison of the parameter indicated in one SENSOR CHANNEL to a similar parameter in a different SENSOR CHANNEL. It is based on the assumption that SENSOR CHANNELs monitoring the same parameter should read approximately the same value. Significant deviations between the channels could be an indication of excessive instrument drift on one of the channels or other channel faults. A SENSOR CHANNEL CHECK will detect gross channel failure; thus, it is key to verifying the instrumentation continues to operate properly between each DIVISION FUNCTIONAL TEST.

Agreement criteria are determined by the plant staff based on a combination of the channel instrument and parameter indication uncertainties.

The specified high reliability of each channel provides confidence that a channel failure will be rare. In addition, the continuous self tests provide confidence that failures will be automatically detected. However, a low surveillance interval of 12 hours is used to provide confidence that gross failures which do not activate an annunciator or alarm will be detected within 12 hours. The SENSOR CHANNEL CHECK supplements less formal, but more frequent, checks of channels during normal operational use of the displays associated with the channels required by the LCO.

BASES

SURVEILLANCE REQUIREMENTS (continued)

SR 3.3.1.4.2

An OUTPUT CHANNEL FUNCTIONAL TEST is performed on each OUTPUT CHANNEL to provide confidence that an ESF device will actuate as intended. This test overlaps or is performed in conjunction with the COMPREHENSIVE FUNCTIONAL TEST in SR 3.3.1.3.4 to provide end to end testing.

The 18 month frequency is based on the ABWR expected refueling interval and the need to perform this Surveillance under the conditions that apply during a plant outage to reduce the potential for an unplanned transient if the Surveillance were performed with the reactor at power. The high reliability of the devices used in the OUTPUT CHANNELS provide confidence that the specified frequency is adequate.

SR 3.3.1.4.3

A DIVISIONAL FUNCTIONAL TEST is performed on the LOGIC CHANNELS and SENSOR CHANNELS in each ESF division to provide confidence that the Functions will perform as intended. The test is performed by replacing the normal signal with a test signal as far upstream in the channel as possible within the constraints of the instrumentation design and the need to perform the surveillance without disrupting plant operations. See Section 1.1, “Definitions” for additional information on the scope of the test.

The devices used to implement the Functions are specified to be of high reliability and have a high degree of redundancy. Therefore, the 92 day frequency provides confidence that device actuation will occur when needed. This test overlaps or is performed in conjunction with the DIVISIONAL FUNCTIONAL TESTS performed under LCO 3.3.1.1, “SSLC Sensor Instrumentation” to provide testing up to the final actuating device.

SR 3.3.1.4.4

The tests in the COMPREHENSIVE FUNCTIONAL TEST (CoFT) verify proper ELCS system function, computer component function, software and hardware interactions, response times, and error handling. Error statistics, usage statistics, historical statistics, and various other measures are used to verify proper performance of the ELCS. Successful completion of these tests establishes OPERABILITY of SENSOR CHANNELS, LOGIC CHANNELS, and OUTPUT CHANNELS.

BASES

SURVEILLANCE REQUIREMENTS (continued)

SR 3.3.1.4.4 (continued)

The ABWR protective action equipment is divided into segments to simplify software and hardware design and to limit the scope of effect of a given failure. A periodic test is performed to provide confidence that the segments and associated interconnections are operating within specified limits. The CoFT is designed to confirm that the current configuration and state of the system is acceptable and to determine the real-time performance of the overall system. Appropriately designed tests which include suitable data logging and analysis may be used to detect unexpected degradation.

The software based ELCS system contains many states, not all of which will occur over the life of the plant. The most important states are those that are required to mitigate accidents. Therefore, the CoFT focuses on usage testing, which exercises the overall system by simulating the input conditions under which the system is designed to perform, rather than coverage testing, which attempts to exercise all possible states of the system. Before plant start-up there is a high level of confidence that the ELCS system will operate as specified due to the extensive inspections, tests, and analyses conducted during the ITAAC preoperational phases. During the plant operating life, the CoFT assures that the protective action equipment is within its specified performance characteristics.

The COMPREHENSIVE FUNCTIONAL TEST is intended to provide end to end testing. If necessary, other surveillances (e.g. CALIBRATION, OUTPUT CHANNEL TEST) that overlap the CoFT may be used to satisfy the requirements of the COMPREHENSIVE FUNCTIONAL TEST.

This surveillance overlaps or is performed in conjunction with the COMPREHENSIVE FUNCTIONAL TESTS in LCO 3.3.1.1, “SSLC Sensor Instrumentation”. The combined or overlapping tests provide complete end-to-end testing of all ESF protective actions.

The 18 month frequency is based on the ABWR expected refueling interval and the need to perform this Surveillance under the conditions that apply during a plant outage to reduce the potential for an unplanned transient if the Surveillance were performed with the reactor at power. The specified high reliability of the devices used in the SSLC processing coupled with the CHANNEL FUNCTIONAL TESTs provide confidence that the specified frequency is adequate.

BASES

SURVEILLANCE REQUIREMENTS (continued)

SR 3.3.1.4.5

This SR ensures that the individual channel response times for ECCS actuation are less than or equal to the maximum values assumed in the accident analysis. Response time testing acceptance criteria are included in Reference 5.

The 18 month frequency is based on the ABWR expected refueling interval and the need to perform this Surveillance under the conditions that apply during a plant outage. The specified high reliability of the devices used in the ESF and ECCS processing coupled with operating experience which shows that random failures of instrumentation and embedded processor components causing serious time degradation, but not channel failure, are infrequent provide confidence that the specified Frequency is adequate.

SR 3.3.1.4.6

A SENSOR CHANNEL CALIBRATION is a complete check of the instrument loop and the sensor. This test verifies a SENSOR CHANNEL responds to the measured parameter within the necessary range and accuracy. SENSOR CHANNEL CALIBRATION leaves the channel adjusted to account for instrument drifts between successive calibrations. Measurement error historical determinations must be performed consistent with the plant specific setpoint methodology. The channel shall be left calibrated consistent with the assumptions of the setpoint methodology. As noted, the calibration includes calibration of all parameters used to establish derived setpoints and all parameters used to automatically bypass a trip function.

If the as found trip point (fixed or variable) is not within its Allowable Value, the plant specific setpoint methodology may be revised, as appropriate, if the history and all other pertinent information indicate a need for the revision. Calibration shall be provided that is consistent with the assumptions of the current plant specific setpoint methodology.

The 18 month frequency is based on the ABWR expected refueling interval and the need to perform this Surveillance under the conditions that apply during a plant outage. The Frequency is adequate based on the specified low drift of the devices used to implement the Functions covered by this LCO.

BASES

SURVEILLANCE REQUIREMENTS (continued)

SR 3.3.1.4.7

A CHANNEL FUNCTIONAL TEST is performed on each required manual initiation channel to provide confidence that an ESF device will actuate as intended.

The 18 month frequency is based on the ABWR expected refueling interval and the need to perform this Surveillance under the conditions that apply during a plant outage to reduce the potential for an unplanned transient if the Surveillance were performed with the reactor at power. The high reliability of the devices used for manual initiation provide confidence that the specified frequency is adequate.

REFERENCES

1. DCD Tier 2, Section 5.2.2, “Overpressure Protection.”
2. DCD Tier 2, Section 6.3.3, “ECCS Performance Analysis.”
3. DCD Tier 2, Chapter 15, “Accident Analysis.”
4. DCD Tier 2, Section 9.3.5, “Standby Liquid Control System.”
5. DCD Tier 2, Section 1.1.3.

BASES

Table B 3.3.1.4-1 (Page 1 of 1)
ESF Systems Instrumentation

1. Low Pressure Core Flooder Actuation.
2. High Pressure Core Flooder Actuation.
3. Reactor Core Isolation Cooling System Actuation.
4. Automatic Depressurization System.
5. Diesel - Generator Actuation.
6. Standby Gas Treatment System Actuation.
7. Reactor Building Cooling Water / Service Water Actuation.
8. Containment Atmospheric Monitoring
9. Suppression Pool Cooling Actuation.
10. Primary Containment Isolation Valves Actuation.
11. Secondary Containment Isolation Valves Actuation.
12. Reactor Core Isolation Cooling Isolation Actuation.
13. Reactor Water Cleanup Isolation Actuation.
14. Shutdown Cooling System Isolation Actuation.

BASES

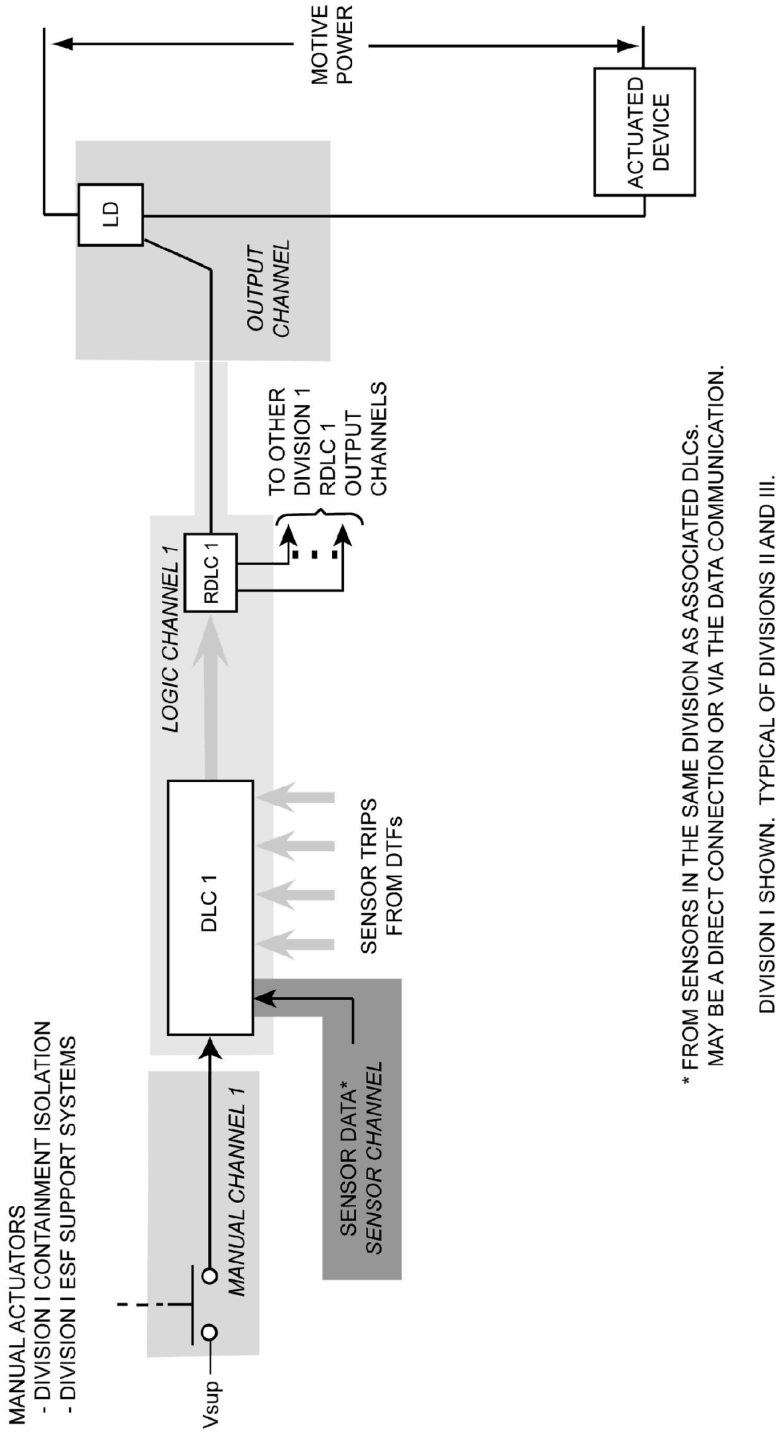

FIGURE B3.3.1.4-1 ESF ACTUATION CHANNEL STRUCTURE FOR CONTAINMENT ISOLATION, ESF SUPPORT

BASES

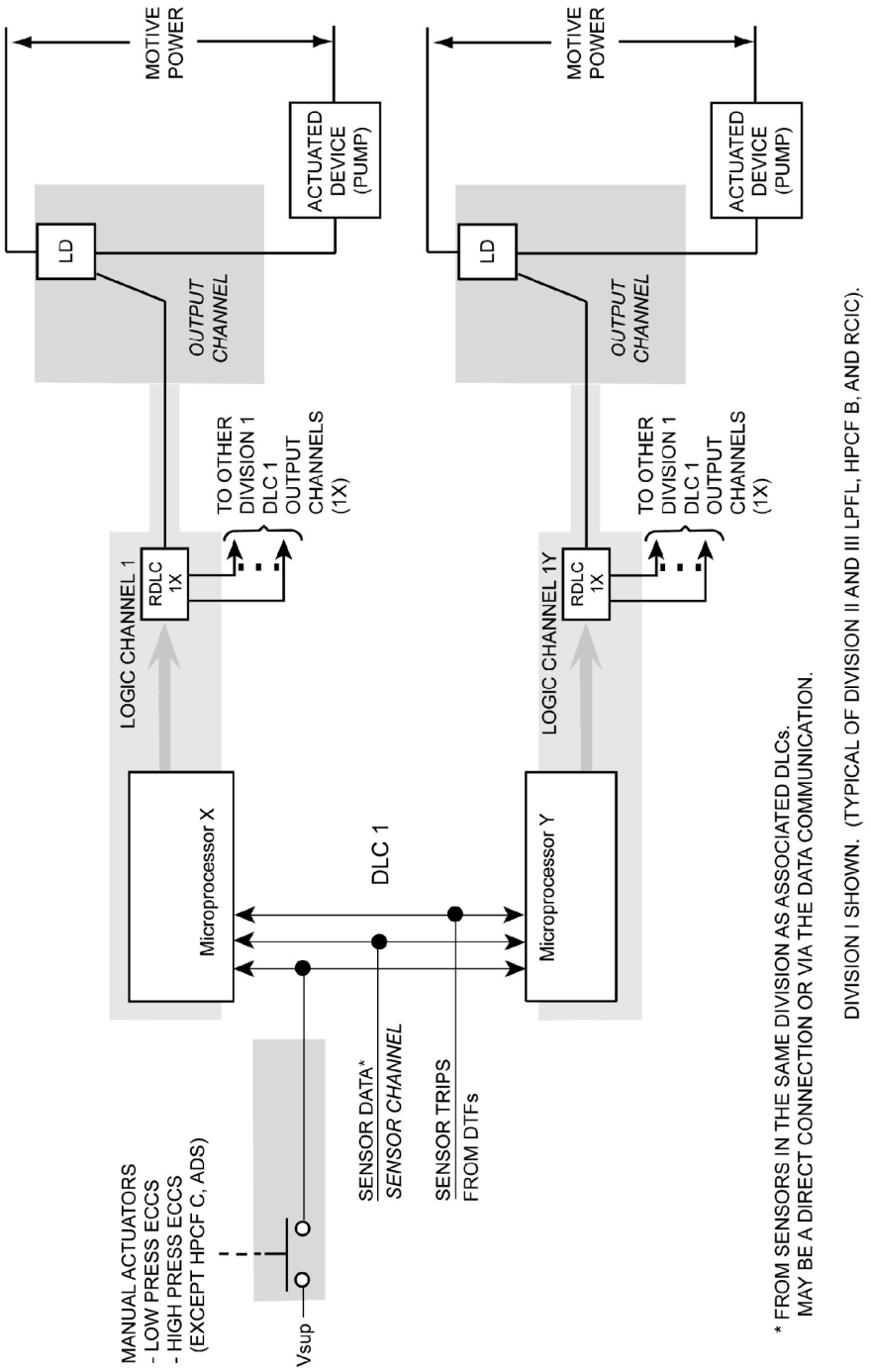

FIGURE B3.3.1.4-2 ESF ACTUATION CHANNEL STRUCTURE FOR LPFL B, C, HPCF B, RCIC

BASES

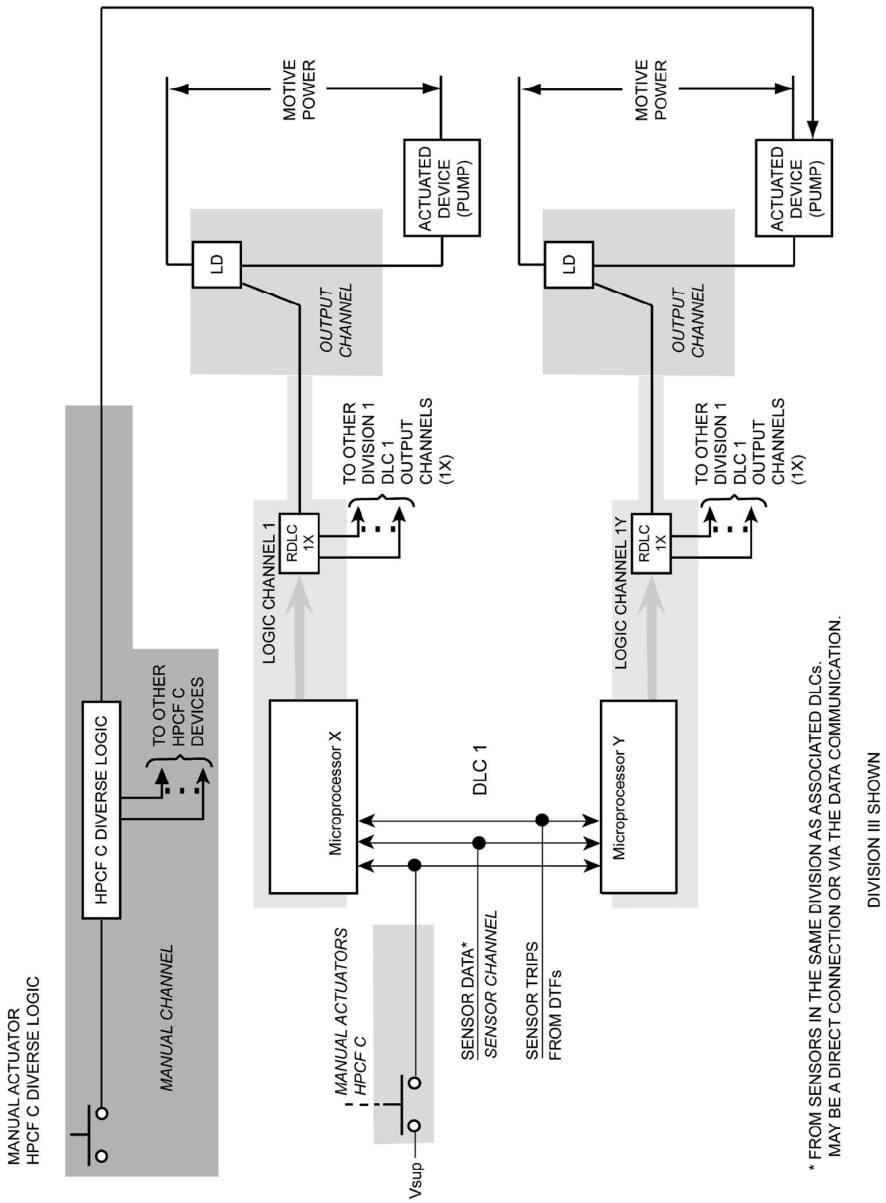

FIGURE B3.3.1.4-3 ESF ACTUATION CHANNEL STRUCTURE FOR HPCF C

BASES

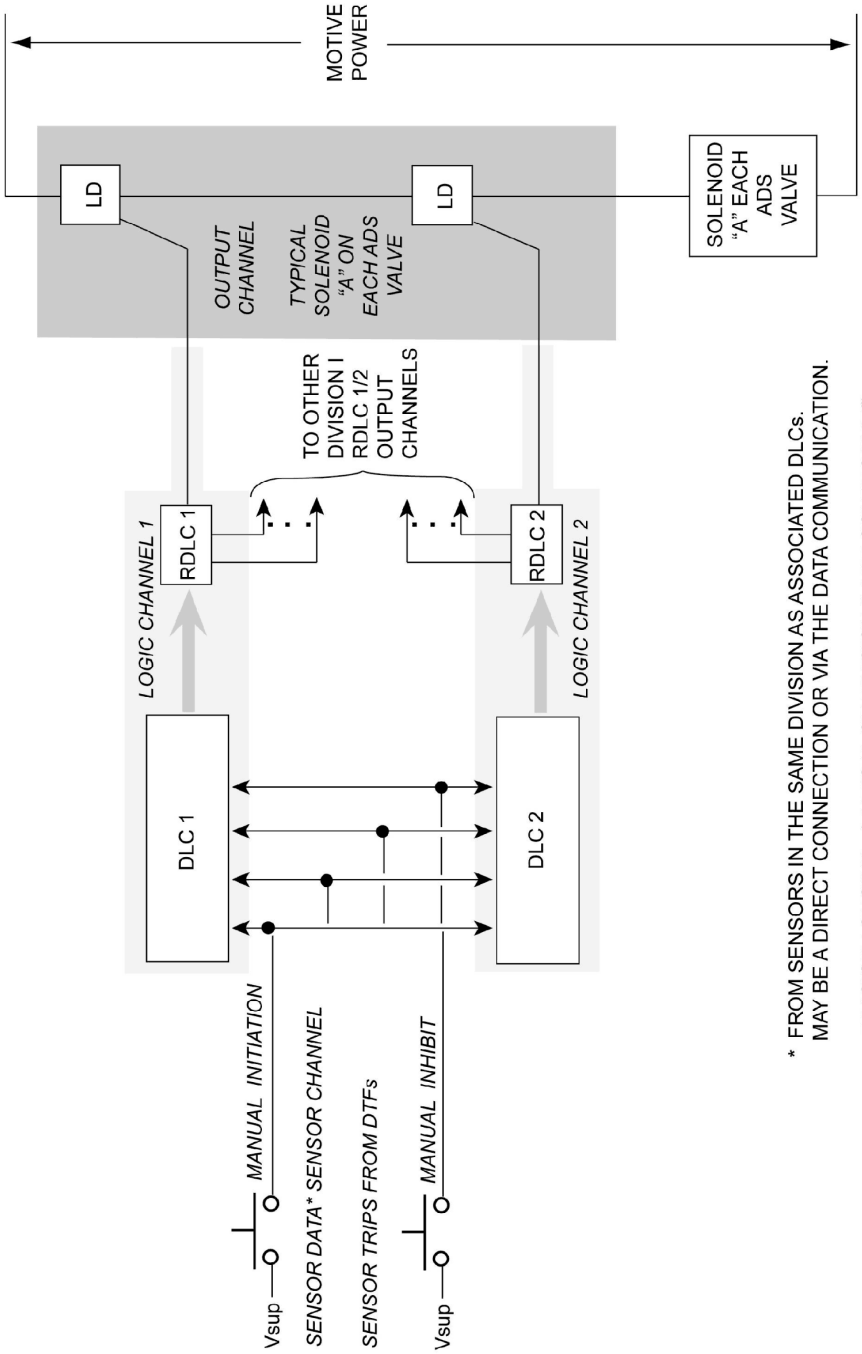

* FROM SENSORS IN THE SAME DIVISION AS ASSOCIATED DLCs. MAY BE A DIRECT CONNECTION OR VIA THE DATA COMMUNICATION.

DIVISION I SHOWN. (TYPICAL OF DIVISION II AND SOLENOID "B")

FIGURE B3.3.1.4-4 ESF ACTUATION CHANNEL STRUCTURE FOR ADS

BASES

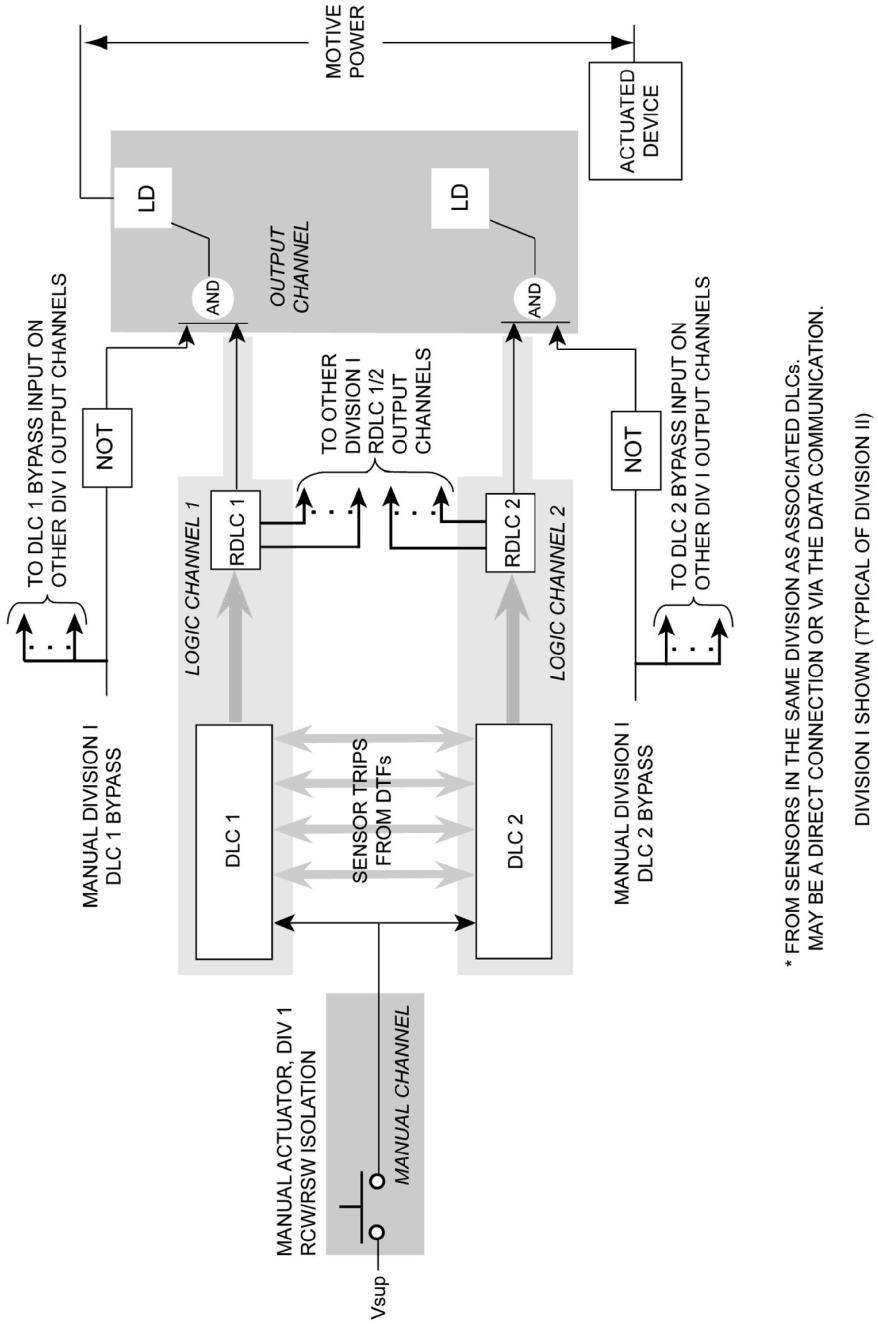

FIGURE B3.3.1.4-5 ESF ACTUATION CHANNEL STRUCTURE FOR RCW/RSW ISOLATION

B 3.3 INSTRUMENTATION

B 3.3.2.1 Startup Range Neutron Monitor (SRNM) Instrumentation

BASES

BACKGROUND

The SRNMs provide the operator with information relative to the neutron level from very low flux levels to 15% power. There is sufficient overlap between the SRNMs and the APRMs to assure continuous indication of core power level. The SRNM subsystem protects against abnormal reactivity insertions when the plant is in the startup power range by sending a trip signal to the RPS on a high neutron flux or short reactor period (i.e. high rate of flux increase). The setpoints are selected to provide confidence that fuel integrity is maintained for the worst reactivity insertion event coincident with the most limiting SRNM bypass or out of service condition.

The SRNM subsystem of the Neutron Monitoring System (NMS) consists of ten channels connected to detectors which are evenly distributed throughout the core and located slightly above the fuel mid-plane. Each channel consists of a fission chamber with associated cabling, signal conditioning equipment, and electronics to implement the various SRNM functions. The SRNMs are assigned to the four Neutron Monitoring System (NMS) divisions as follows:

Division I: SRNM Detectors A, E & J

Division II: SRNM Detectors B & F

Division III: SRNM Detectors C, G & L

Division IV: SRNM Detectors D & H

The SRNM channels are divided into three bypass Groups. One channel from each Group may be bypassed (i.e. bypass of up to three channels). The Groups are arranged so there is at least one unbypassed channel in each core quadrant. The SRNMs are assigned to the following bypass Groups:

Group 1: SRNM A, B, F, G

Group 2: SRNM C, E, H

Group 3: SRNM D, J, L

BASES

BACKGROUND (continued)

There are three multiposition operator control switches that correspond to the Groups, so that only one channel from each Group can be bypassed.

In addition to scram and rod block functions, each SRNM channel includes indication and alarm functions. Scram and rod block functions are addressed by other LCOs while this LCO addresses OPERABILITY requirements only for the monitoring and indication functions.

During refueling, shutdown, and low power operations, the primary indication of neutron flux levels is provided by the SRNMs. During refueling special movable detectors may be connected to the normal SRNM circuits. The SRNMs provide monitoring of reactivity changes during fuel or control rod movement and give the control room operator early indication of unexpected subcritical multiplication that could indicate an approach to criticality.

APPLICABLE SAFETY ANALYSIS

Prevention and mitigation of prompt reactivity excursions during refueling and low power operation are provided by:

- LCO 3.9.1, “Refueling Equipment Interlocks”
- LCO 3.1.1, “SHUTDOWN MARGIN (SDM)”
- LCO 3.3.1.1, “SSLC SENSOR Instrumentation,” Startup Range Neutron Monitoring Flux High/Flux short period and Average Power Range Monitor Neutron Flux – High/Setdown Functions
- LCO 3.3.5.1, “Control Rod Block Instrumentation.”

The applicable safety analysis for the SRNMs are covered by the listed LCOs. This LCO is included in the technical specifications since the SRNMs are the only indication of neutron flux levels during refueling and during those portions of startup where the APRMs are off scale.

The SRNM instrumentation satisfies Criterion 2 of the NRC Policy Statement.

LCO

While in MODE 2 with the APRMs downscale, ten (4 in bypass Group 1, 3 each in bypass Groups 2 and 3) SRNM channels are required to be OPERABLE to monitor the reactor flux level prior to and during control rod withdrawal, to monitor subcritical multiplication and reactor criticality, and to monitor neutron flux level and reactor period until the flux level is within the range of the APRMs. The assignment of SRNM detectors to the four divisions and three bypass Groups are such that with one division INOPERABLE or one group in bypass the indications provide an adequate representation of the overall core response during those

BASES

LCO (continued)

periods when reactivity changes are occurring throughout the core. The preferred configuration is to have at least one unbypassed SRNM in each core quadrant.

In MODES 3 and 4, with the reactor shut down, two SRNM channels are sufficient to provide redundant monitoring of flux levels in the core. The preferred configuration is to have the SRNMs in different core quadrants.

In MODE 5, during a spiral offload or reload, an SRNM outside the fueled region is not required to be OPERABLE, since it is not capable of monitoring neutron flux in the fueled region of the core. Thus, the LCO (per footnote [(a)] in Table 3.3.2.1-1) permits CORE ALTERATIONS in a quadrant with no OPERABLE SRNM in an adjacent quadrant when the bundles being spiral reloaded or spiral offloaded are all in a single fueled region containing at least one OPERABLE SRNM. Spiral reloading and offloading are CORE ALTERATIONS in a cell on the edges of a continuous fueled region (the cell can be reloaded or offloaded in any sequence).

In nonspiral refueling operations, two SRNMs are required to be OPERABLE to provide redundant monitoring of reactivity changes occurring in the reactor core. Because of the local nature of reactivity changes during refueling, adequate coverage is provided by requiring one SRNM to be OPERABLE in the quadrant of the reactor core where CORE ALTERATIONS are being performed and one SRNM to be OPERABLE in an adjacent quadrant. These requirements ensure that the reactivity of the core will be continuously monitored during CORE ALTERATIONS.

Footnote [(b)] to Table 3.3.2.1-1 permits the substitution of movable detectors for the fixed detectors during CORE ALTERATIONS. These special detectors must be connected to the normal SRNM circuits in the NMS such that the applicable neutron flux indication can be generated. These special detectors provide more flexibility in monitoring reactivity changes during fuel loading, since they can be positioned anywhere within the core during refueling. The movable detectors must meet the location requirements of SR 3.3.2.1.2, and all other required SRs for SRNMs.

For an SRNM channel to be considered OPERABLE, it must be providing neutron flux monitoring indication.

APPLICABILITY

The SRNMs are required to be OPERABLE in MODES 3, 4, 5, and in MODE 2 until neutron flux is within the range of the APRMs. In MODE 1 and in MODE 2 with the APRMs on scale, the APRMs provide adequate monitoring of reactivity changes in the core.

BASES

ACTIONS

A Note has also been provided to modify the Actions in this LCO. Section 1.3, Completion Times, specifies that once a Condition has been entered, subsequent trains, subsystems, components, or variables expressed in the Condition, discovered to be inoperable or not within limits, will not result in separate entry into the Condition. Section 1.3 also specifies that Required Actions of the Condition continue to apply for each additional failure, with Completion Times based on initial entry into the Condition. However, the Required Actions for inoperable SRNM channels provide appropriate compensatory measures for multiple inoperable channels. As such, a Note has been provided that allows separate Condition entry for each inoperable channel.

A.1

In MODE 2, while the APRMs are downscale, SRNMs provide monitoring of core reactivity and criticality. The assignment of the SRNM channels to the bypass Groups and SRNM divisions are such that there is adequate redundancy and core coverage when one required SRNM is inoperable in each Group.

Action A.1 requires placing the inoperable channel in bypass within one hour. Since adequate redundancy and core coverage is maintained, no further action is required. The Completion Time is sufficient to permit the operator to perform the action.

Action A.2 requires placing the inoperable channel in trip within one hour. This Action is included to address the loss of power to an SRNM channel which has the same impact on the channel output as a trip. Since adequate redundancy and core coverage is maintained, no further action is required when the channel is tripped. The Completion Time is sufficient to permit the operator to perform the action.

A note has been added to this Required Action to exclude the MODE change restriction of LCO 3.0.4. This exception allows entry into the MODES or other specified conditions of applicability while relying on the Action. This exception is acceptable because adequate redundancy is maintained, the low probability of an event requiring these instruments, and the self-test features will detect most additional failures.

BASES

ACTIONS (continued)

B.1

If the Required Action for Condition A is not implemented within the allowed Completion Time, or if four or more channels are inoperable, the reactor must be placed in MODE 3. With all control rods fully inserted, the core is in its least reactive state with the most margin to criticality. The allowed Completion Time of 12 hours is reasonable, based on operating experience, to reach MODE 3 in an orderly manner and without challenging plant systems.

C.1 and C.2

With one or more required SRNM channels inoperable in MODE 3 or 4, the neutron flux monitoring capability is degraded or nonexistent. The requirement to fully insert all insertable control rods ensures that the reactor will be at its minimum reactivity level. Placing the reactor mode switch in the shutdown position causes a scram and prevents subsequent control rod withdrawal by maintaining a control rod block. The allowed Completion Time of 1 hour is sufficient to accomplish the Required Action, and takes into account the low probability of an event requiring the SRNM occurring during this time.

D.1, D.2, and D.3

With one required SRNM inoperable in MODE 5, the capability to detect local reactivity changes in the core during refueling is degraded, CORE ALTERATIONS (Action D.1) must be immediately suspended, and action must be immediately initiated to insert all insertable control rods in core cells containing one or more fuel assemblies (Action D.2). Suspension of CORE ALTERATIONS shall not preclude completion of the movement of a component to a safe, conservative position.

Suspending CORE ALTERATIONS prevents the two most probable causes of reactivity changes, fuel loading and control rod withdrawal, from occurring. Inserting all insertable control rods ensures that the reactor will be at its minimum reactivity, given that fuel is present in the core.

Required Action D.3, which must be initiated within 7 days, is provided to ensure that having less than the required number of SRNMs inoperable with the vessel head removed is not construed as a condition that allows continuous operations. Thus, entry into MODE 5 without the required SRNM channels OPERABLE is not allowed per LCO 3.0.4.

BASES

ACTIONS (continued)

D.1, D.2, and D.3 (continued)

Actions (once required to be initiated) to insert control rods and restore SRNMs must continue until all insertable rods in core cells containing one or more fuel assemblies are inserted, and the required SRNMs are restored to OPERABLE status.

E.1

With two required SRNMs inoperable in MODE 5, the ability to detect local reactivity changes in the core during refueling is unavailable. Required Actions D.1, D.2, and D.3 are already applicable and continue to be applicable. Required Action E.2 modifies Required Action D.3 to require immediate initiation of action to restore one of the inoperable required SRNMs to OPERABLE status instead of requiring initiation of action within the former Completion Time of 7 days.

SURVEILLANCE REQUIREMENTS

The SRs for each SRNM Applicable MODE or other specified condition are found in the SRs column of Table 3.3.2.1-1.

SR 3.3.2.1.1

Performance of the CHANNEL CHECK ensures that a gross failure of instrumentation has not occurred between CHANNEL FUNCTIONAL TESTS. A CHANNEL CHECK is a comparison of the parameter indicated on one channel to the same parameter indicated on other similar channels. It is based on the assumption that instrument channels monitoring the same parameter should read approximately the same value. Significant deviations between the instrument channels could be an indication of excessive instrument drift or other faults in one of the channels.

Agreement criteria are determined by the plant staff, based on a combination of the channel instrument uncertainties, including indication and readability. If a channel is outside the match criteria, it may be an indication that the instrument has drifted outside its limit.

The specified high reliability of each SRNM channel provides confidence that a channel failure will be rare. However, a surveillance interval of 12 hours is used to provide confidence that gross failures that do not activate an annunciator or alarm will be detected within the specified Frequency. The CHANNEL CHECK supplements less formal, but more frequent, checks of channels during normal operational use of the displays associated with the channels required by the LCO.

BASES

SURVEILLANCE REQUIREMENTS (continued)

SR 3.3.2.1.2

To provide adequate coverage of potential reactivity changes in the core, one SRNM is required to be OPERABLE in the quadrant where CORE ALTERATIONS are being performed, and another OPERABLE SRNM must be in an adjacent quadrant. Note 1 states that this SR is imposed only during CORE ALTERATIONS. It is not required to be met at other times in MODE 5 since core reactivity changes are not occurring.

This Surveillance consists of an evaluation to establish that the number and location of OPERABLE SRNM channels are appropriate for the core region undergoing alteration. Note 2 covers situations where only one SRNM is required to be OPERABLE, per footnote (a) in Table 3.3.2.1-1, so only the a. portion of this SR is required. Note 3 clarifies that the three requirements can be met by the same or different OPERABLE SRNMs.

The specified high reliability of each SRNM channel provides confidence that a channel failure will be rare. However, a surveillance interval of 12 hours is used to provide confidence that the required number of SRNMs are operable during CORE ALTERATIONS. The SR is also imposed when the quadrant undergoing alterations changes to provide confidence that the configuration of OPERABLE SRNM channels is appropriate. This SR supplements the alarms and/or annunciators that result from most failures and operational controls over refueling activities, which include steps to ensure that the SRNMs required by the LCO are in the proper quadrant.

SR 3.3.2.1.3

This Surveillance consists of a verification of the SRNM instrument readout to ensure that the SRNM reading is greater than a specified minimum count rate. This ensures that the detectors are indicating count rates typical of neutron flux levels within the core.

If there are insufficient fuel assemblies in the core the count rate will be too low to meet this SR. Therefore, the SR is modified by a Note that exempts an SRNM channel from the SR when there are four or less fuel assemblies adjacent to the SRNM and no other fuel assemblies are in the associated core quadrant. With four or less fuel assemblies loaded around each SRNM and no other fuel assemblies in the associated quadrant, even with a control rod withdrawn the configuration will not be critical.

BASES

SURVEILLANCE REQUIREMENTS (continued)

SR 3.3.2.1.3 (continued)

The Frequency is based upon channel redundancy and other information available in the control room, and ensures that the required channels are frequently monitored while core reactivity changes are occurring. When no reactivity changes are in progress, the Frequency is relaxed from 12 hours to 24 hours.

SR 3.3.2.1.4 and SR 3.3.2.1.5

Performance of a CHANNEL FUNCTIONAL TEST demonstrates the associated channel will function properly.

SR 3.3.2.1.4 is required in MODE 5, and the 7 day Frequency ensures that the channels are OPERABLE while core reactivity changes could be in progress. This Frequency is reasonable, based on the reliability of the devices used in the SRNM and on other Surveillances (such as a CHANNEL CHECK) that ensure proper functioning between CHANNEL FUNCTIONAL TESTS.

SR 3.3.2.1.5 is required in MODE 2 with the APRMs downscale and in MODES 3 and 4. Since core reactivity changes do not normally take place in these modes, the Frequency has been extended from 7 days to 31 days. The 31 day Frequency is based on the reliability of the processing devices used and on other Surveillances (such as CHANNEL CHECK) that ensure proper functioning between CHANNEL FUNCTIONAL TESTS.

This Surveillance may be delayed on entry into the specified condition of Applicability. The SR must be performed within 12 hours of reaching a neutron flux level where the SRNMs are sufficiently below their upscale value to permit satisfactory testing. The permissible delay is short compared to the surveillance interval and permits sufficient time to perform the surveillance. Note that surveillances performed under LCO 3.3.1.1, “SSLC Sensor Instrumentation”, overlap this SR to some degree.

BASES

SURVEILLANCE REQUIREMENTS (continued)

SR 3.3.2.1.6

Performance of a CHANNEL CALIBRATION verifies the performance of the SRNM circuitry. The 18 month Frequency is based on the expected ABWR refueling interval to provide the plant conditions required to perform the test and considers the low likelihood of a change in the system or component status. The neutron detectors are excluded from the CHANNEL CALIBRATION because they cannot readily be adjusted. The detectors are fission chambers that are designed to have a relatively constant sensitivity over the range, and with an accuracy specified for a fixed useful life.

REFERENCES

None.

B 3.3 INSTRUMENTATION

B 3.3.3.1 Essential Communication Function (ECF)

BASES

BACKGROUND

The ECF is a set of data collection and data distribution functions that provide plant parameter data collection and distribution for use by the individual safety systems in providing protective action. The ECF consists of the equipment implementing the ECF (e.g., I/O Units in the Reactor Building and the Main Control Room).

The ECFs are separated in four independent divisions (Div. I, II, III, IV). The ECF acquires data from remote process sensors and discrete devices located within the plant, and transmits the data to the ESF Logic and Control System (ELCS) TLF in the main control room area over redundant optical data transmission paths. The ELCS processes that data according to required system logic protocols to calculate control signals. The ECF distributes the resulting control signals to the final actuators of the ELCS driven equipment.

The equipment implementing the ECF features self diagnostics and accommodates a single ECF failure (e.g., cable break or device failure) within a division without loss of the ECF. The ECF continues normal function after an error is detected with no interruption in data communication. Self diagnostics run continuously and faults are indicated in the main control room. Loss of communications in an entire division does not cause transient or erroneous data to occur at system outputs, but may cause a loss of ability to control equipment in that division.

The redundant data transmission paths within an ELCS division provide communication between remote process sensors and discrete devices located within the plant, the main control room area ELCS, and final actuators of the supported systems' driven equipment. The paths are redundant so that communication is maintained as long as there is one OPERABLE path between the equipment implementing the ECF. One path between the equipment implementing the ECF is called a "segment" in this LCO.

BASES

Background (continued)

A data transmission segment is OPERABLE when communication between equipment implementing the ECF can occur over the segment. This requires the equipment implementing the ECF to be OPERABLE and the path between the equipment (e.g., segment) to be OPERABLE. The ECF must also be capable of providing the specified maximum throughput and the data error rates must be within specified limits for it to be considered OPERABLE.

APPLICABLE SAFETY ANALYSIS, LCO and APPLICABILITY

Some portion of the ECF is required to be operable in all MODES since there are one or more safety systems that acquire data from the ECF in all modes. The signal acquisition and conversion functions are adequately covered by the LCOs for the systems that acquire and/or transmit data over the ECF. Therefore, this LCO addresses only the data transmission portion of the ECF.

The ECF does not directly generate any trip functions so there is no specific Allowable Value for the ECF since the effect of any ECF processing is included in the allowable values for the Functions in systems that utilize the ECF.

ACTIONS

A Note has been provided to modify the ACTIONS related to ECF. Section 1.3, Completion Times, specifies that once a Condition has been entered, subsequent trains, subsystems, components, or variables expressed in the Condition, discovered to be inoperable or not within limits, will not result in separate entry into the Condition. Section 1.3 also specifies that Required Actions of the Condition continue to apply for each additional failure, with Completion Times based on initial entry into the Condition. However, the Required Actions for multiple inoperable ECF data transmission paths provide appropriate compensatory measures. As such, a Note has been provided that allows separate Condition entry for each inoperable ECF division.

A.1

This Condition address the situation where there is some loss of data transmission redundancy in one ECF division but a complete data transmission path is maintained so the systems serviced by the ECF can acquire the needed data.

All Functions required for protective actions remain OPERABLE and a single failure will not result in loss of protection. In addition, the self test features provide confidence that any additional failures will be

BASES

ACTIONS (continued)

A.1 (continued)

automatically detected. This is an acceptable long term condition so the Completion Time specified for repair corresponds to a maximum time equal to the refueling interval. However, the LCO requires the repairs to be completed if a cold shutdown occurs prior to the next refueling outage.

A Note is included to exclude this Action from the MODE change restriction of LCO 3.0.4. This exception allows entry into a MODE or other condition of applicability while relying on the Actions. This exception is acceptable because adequate redundancy is maintained, the low probability of an event requiring these instruments, and the self-test features will detect most additional failures.

B.1

This Condition address the situation where there is some loss of data transmission redundancy in more than one ECF division but complete data transmission paths are maintained in all divisions. The ECF performs as intended and a single failure will not cause loss of data transmission capability in more than one division.

This LCO is included to assure that any degradation in data transmission redundancy in more than one ECF division will be repaired on a reasonable schedule. The Completion Time is based on the specified high reliability of the individual data transmission segments and the limited number of devices involved in each segment. Also, the self test will detect most additional data transmission path failures.

C.1

If the required action of condition B is not accomplished within the required Completion Time, then additional ECF monitoring (Action C.1) is required to provide confidence that adequate data transmission capability is maintained. The Completion Times for C.1 are adequate to detect an inoperable ECF division soon enough so that the impact of any additional failures on plant risk is negligible.

Action C.2 requires preparation of a special evaluation to determine the root cause of the inoperable data transmission segment failure and to assure that it is not a potential common mode failure.

BASES

ACTIONS (continued)

D.1

When one or more ECF divisions become inoperable then the Functions and/or Features associated with the ECF become unavailable. The loss of one or more ECF data transmission divisions is similar to the loss of multiple SENSOR CHANNELS in LCO 3.3.1.1, “SSLC Sensor Instrumentation” or LOGIC CHANNELS in LCO 3.3.1.2, “RPS and MSIV Actuation”, and 3.3.1.4, “ESF Actuation Instrumentation”. Therefore, declaring the associated Functions and Features to be inoperable will cause entry into the appropriate conditions in other LCOs and suitable compensatory measures will be implemented.

The Completion Time provides adequate time for the operator to determine which Functions and/or Features need to be declared inoperable.

A note is included to exclude this Action from the MODE change restriction of LCO 3.0.4. The ECF must be OPERABLE in all MODES and other conditions while declaring the Features and Functions associated with the inoperable ECF division may require entry into a different MODE or other condition.

SURVEILLANCE REQUIREMENTS

SR 3.3.3.1.1

The operability of the ECF data transmission segments should be periodically confirmed to assure that an adequate degree of redundancy is maintained. This SR is included to provide confidence that all data transmission segments are OPERABLE. The test consists of assuring that the two data transmission paths between the equipment implementing the ECF are OPERABLE. The test assures that the equipment implementing the ECF is OPERABLE.

The ECF data transmission segments are constructed from a few highly reliable devices and the loss of segments while maintaining data transmission integrity does not degrade plant safety. Therefore, a frequency of 92 days is adequate.

BASES

SURVEILLANCE REQUIREMENTS (continued)

SR 3.3.3.1.2

A comprehensive network performance test confirms that the data transmission capability is as intended. The test may be performed using commercially available equipment specifically designed to perform tests on digital communication networks. The network analysis provides confidence that data error rates are within specified limits, signal quality is within specifications and the network is capable of handling the specified maximum required throughput.

The 18 month frequency is based on the ABWR expected refueling interval and the need to perform this Surveillance under the conditions that apply during a plant outage to reduce the potential for an unplanned transient if the Surveillance were performed with the reactor at power. The specified high reliability of the devices used in the ECF combined with self tests intended to detect ECF degradation provide confidence that this frequency is adequate.

REFERENCES

None.

B 3.3 INSTRUMENTATION

B 3.3.4.1 Anticipated Transient Without Scram (ATWS) and End of Cycle Recirculation Pump Trip (EOC-RPT) Instrumentation

BASES

BACKGROUND

The EOC-RPT is provided to improve margins to the MCPR limit during specified pressurization transients. ATWS Features are provided to protect against the remote probability of a failure to insert all control rods when needed by the Reactor Protection System scram function. The ATWS Functions initiate several devices to add negative reactivity as a backup to control rod insertion by the scram function of the hydraulic drives for events where the control rods may not be fully inserted. A diagram of the logic for these Functions is shown in Reference 1.

Tripping the recirculation pumps mitigates the effects of an ATWS event since it adds negative reactivity due to the increase in steam voiding in the core region as core flow decreases. When the Reactor Vessel Water Level – Low, Level 3 or Reactor Steam Dome Pressure – High setpoint is reached, a specified number of the Reactor Internal Pumps (RIP) are tripped. If reactor level decreases to the Reactor Vessel Water Level – Low, Level 2 setpoint the remaining RIPs are tripped, with a specified number of the pumps tripped immediately and the others tripped after a specified delay. The RIP trip at Level 3 is included to mitigate level transients and prevent Level 2 ECCS initiations for pressurization and inventory reduction events that are less severe than the design basis events while the Level 2 trip is provided to trip all of the RIPs as required by the design basis.

The Anticipated Transient Without Scram Alternate Rod Insert (ATWS - ARI) System initiates insertion of the electric motor-driven Fine Motion Control Rod Drives (FMCRDs), a runback of the recirculation pumps, and alternate scram air header dump valves. The alternate air header dump valves are intended to cause the control rod hydraulic drives to insert the control rods. The FMCRDs provide an alternate to the hydraulic rod drives. The recirculation runback is provided to reduce reactor power (via void reactivity changes) coincident with activation of the control rod insertion Functions.

The ATWS-ARI Functions are included in the Recirculation Flow Control (RFC) system, the Rod Control and Information System (RCIS), and in a separate ATWS-ARI confirmatory logic device included specifically for ATWS-ARI Functions. The RFC is a triple redundant microprocessor system, the RCIS is a dual redundant microprocessor-based system, and the confirmatory logic device uses hardware (i.e. not microprocessor

BASES

BACKGROUND (continued)

based) logic. The data needed for the ATWS-ARI recirculation runback Functions is acquired from other systems using suitable isolation. These systems are completely independent of and diverse to the RPS. The data used is:

- Four independent low Level 2 discrete trip data from the ECCS portion of the ELCS to the RFC.

- Three independent discrete data representations of reactor pressure from the Steam Bypass and Pressure Control (SB&PC) system to the RFC.

- Four channels of scram follow discrete trip data from the Actuators for Scram Air Header Dump Valves to the RCIS and to the FMCRD Insertion confirmatory logic.

Independent ATWS-ARI signals are generated in all three RFC subsystems using 2/4 or 2/3 logic, as appropriate. ATWS-ARI initiation data from all three RFC subsystems is transmitted to both of the RCIS subsystems and to FMCRD Insertion confirmatory logic. Each RCIS LOGIC CHANNEL and the confirmatory logic sends an actuation signal to the FMCRD controllers when trip signals are received from two of the three RFCs or when trip data is received from any two of the four RPS scram follow signals. The FMCRDs are actuated when a signal is received from both of the RCIS channels and from the confirmatory logic. The recirculation runback is actuated when a signal is received from both RCIS channels and the scram header ARI valves are actuated when signals are received from any two of the three RFCs.

The EOC-RPT instrumentation initiates a trip of a specified number of the Reactor Internal Pumps (RIPs) to reduce the peak reactor pressure and power resulting from turbine trip or generator load rejection transients to provide additional margin to core thermal MCPR Safety Limits (SLs). The need for the additional negative reactivity in excess of that normally inserted on a scram reflects end of cycle reactivity considerations. Flux shapes at the end of cycle are such that the control rods may not be able to ensure that thermal limits are maintained during the first few feet of rod travel upon a scram caused by Turbine Control Valve (TCV) Fast Closure, Trip Oil Pressure – Low, or Turbine Stop Valve (TSV) - Closure. The physical phenomenon involved is that the void reactivity feedback due to a pressurization transient can add positive reactivity at a faster rate than the control rods can add negative reactivity.

BASES

BACKGROUND (continued)

The RPT Functions are included in the Recirculation Flow Control (RFC) system. The RFC system is a triple redundant microprocessor based system with the data needed by the RPT Functions acquired from other systems using suitable isolation. The data used by the function is:

- Three independent low Level 3 discrete trip data from the Feedwater Control (FWC) System for the ATWS-RPT.

- Four independent low Level 2 discrete trip data from the ECCS portion of the ELCS for the ATWS-RPT.

- Three independent data representations of high reactor pressure from the Steam Bypass and Pressure Control (SB&PC) system for the ATWS-RPT.

- Four independent composite discrete data values which are a trip state data value when either a Turbine Stop Valve-Closure or Turbine Control Valve Fast Closure, Trip Oil Pressure-Low scram initiation occurs. The data is received from the RTIS and is used for the EOC-RPT. The logic for these signals is described in the SSLC Sensor Instrumentation LCO (LCO 3.3.1.1).

Independent RPT signals are generated in all three RFC subsystems using 2/4 or 2/3 logic, as appropriate. RPT data from all three RFC subsystems are transmitted to the RIP Adjustable Speed Drives (ASD). The ASDs use dual 2/3 logics to implement the trip and include an adjustable delay on the trip actuation signals to the load interrupters.

APPLICABLE SAFETY ANALYSIS, LCO, and APPLICABILITY

The ATWS mitigation features are assumed to be OPERABLE in the analysis of Reference 4. The ATWS aids in preserving the integrity of the fuel cladding following events in which a required scram may not occur. In addition, the ATWS-RPT is assumed to occur in some of the events analyzed in References 2 and 3.

The EOC-RPT of a specified number of RIPs is provided to mitigate the neutron flux, heat flux and pressure transients, and to increase the margin to the MCPR SL for events that cause a rapid shutoff of the steam flow to the main turbine. The analytical methods and assumptions used in evaluating the turbine trip and generator load rejection, as well as other safety analyses that assume EOC-RPT, are summarized in Reference 3.

BASES

APPLICABLE SAFETY ANALYSIS, LCO, and APPLICABILITY (continued)

To mitigate pressurization transient effects, the EOC-RPT must trip the RIPs after initial movement of either the TSVs or fast closure of the TCVs. The combined effects of this RIP trip and a scram reduce fuel bundle power more rapidly than does a scram alone, resulting in an increased margin to the MCPR SL. Alternatively, MCPR limits for an inoperable EOC-RPT as specified in the COLR are sufficient to mitigate pressurization transient effects.

The OPERABILITY of the ATWS and EOC-RPT is dependent on the OPERABILITY of the individual Functions. Each Function must have a required number of OPERABLE channels with their trip points within the specified Allowable Values. The data value for the trip point is set consistent with applicable setpoint methodology assumptions. A channel is inoperable if its actual trip point is not within its required Allowable Value or if the required channel logic is not OPERABLE.

Nominal trip setpoints are established in the setpoint calculations. The data values for the setpoints are selected to ensure the trip points do not exceed the Allowable Value between CHANNEL CALIBRATIONS. Operation with a trip point less conservative than the nominal trip point, but within its Allowable Value, is acceptable. Trip points are those predetermined values of output at which an action should take place. The setpoint data values are compared to the data values representing the measured process parameter (e.g., reactor vessel water level), and when the data value for the process parameter exceeds the setpoint, the logic declares a tripped condition and changes the state of the associated output data value. The analytic limits are derived from the limiting values of the process parameters obtained from the safety analysis. The Allowable Values are derived from the analytic limits corrected for calibration, process, and some of the instrument errors. The trip setpoint data values are then determined accounting for the remaining instrument errors (e.g., drift). The trip setpoints derived in this manner provide adequate protection because instrumentation uncertainties, process effects, calibration tolerances, instrument drift, and severe environment errors (for channels that must function in harsh environments as defined by 10 CFR 50.49) are accounted for.

The individual ATWS Functions are required to be OPERABLE in MODES 1 and 2 to protect against postulated common mode failures of the Reactor Protection System by providing a diverse trip to mitigate the consequences of a postulated ATWS event. In MODES 1 and 2 the reactor may be producing significant power and the recirculation system could be at high flow. Therefore, the potential exists for pressure increases or low water level, assuming an ATWS event. In MODES 3 and 4, the reactor is shut down with all control rods inserted; thus, an

BASES

APPLICABLE SAFETY ANALYSIS, LCO, and APPLICABILITY (continued)

ATWS event is not significant and the possibility of a significant pressure increase or low water level is negligible. In MODE 5, the rod withdrawal block logic and scram time testing restrictions ensure the reactor remains subcritical; thus, an ATWS event is not significant. In addition, the reactor pressure vessel (RPV) head is not fully tensioned so no pressure transient threat to the reactor coolant pressure boundary (RCPB) exists.

EOC-RPT instrumentation satisfies Criterion 3 of the NRC Policy Statement. The modes and other conditions where the EOC-RPT must be OPERABLE are as specified for the turbine stop valve closure and turbine control valve fast closure Functions in the SSLC Sensor Instrumentation LCO (LCO 3.3.1.1).

The specific Applicable Safety Analyses and LCO discussions are listed below on a Function by Function basis. Figure B 3.3.4.1-1 illustrates the Functions.

1. Feedwater Reactor Vessel Water Level - Low, Level 3

Low RPV water level indicates the capability to cool the fuel may be threatened. Should RPV water level decrease too far, fuel damage could result. Therefore, the ATWS-RPT System trips a specified number of RIPs at Level 3 to aid in maintaining level above the top of the active fuel. The reduction of core flow reduces the neutron flux and THERMAL POWER and, therefore, the rate of coolant boiloff.

The Feedwater Reactor Vessel Water Level - Low, Level 3 data originates from three level transmitters that sense the difference between the pressure due to a constant column of water (reference leg) and the pressure due to the actual water level (variable leg) in the vessel. Data from the three level transmitters are received by the three FWC controllers via the data communication function. Level 3 trip data is generated in the FWC and the results from all three FWC controllers are transmitted to each of the three RFC controllers which use 2/3 logic to create RPT data.

Three channels of the Reactor Vessel Water Level - Low, Level 3 Function are available and required to be OPERABLE when ATWS is required to be OPERABLE to ensure that no single instrument failure can preclude an ATWS-RPT from this Function on a valid signal. This Function is considered to be OPERABLE when the Level 3 signals originating in each of the feedwater controller channels is received by the RFCs. The Allowable Value is the same as given in LCO 3.3.1.1, “SSLC Sensor Instrumentation”.

BASES

APPLICABLE SAFETY ANALYSIS, LCO, and APPLICABILITY (continued)

2. Reactor Vessel Water Level - Low, Level 2

Low RPV water level indicates the capability to cool the fuel may be threatened. Should RPV water level decrease too far, fuel damage could result. Therefore, ATWS mitigation is initiated if water level continues to decrease to Level 2 to aid in maintaining level above the top of the active fuel and to provide alternate methods for reducing core reactivity. The actions reduce the neutron flux and THERMAL POWER and, therefore, the rate of coolant boiloff.

Reactor Vessel Water Level - Low, Level 2 trip data is received from all four ELCS divisions by each of the RFC controllers. The ATWS trip logic will generate a trip data value when two of the four are in a tripped state. A trip will occur when needed and spurious trips cannot occur if three of the four Level 2 data values are valid. The basis for this function is as described in the SSLC Sensor Instrumentation LCO (LCO 3.3.1.1).

Four channels of Reactor Vessel Level -Low, Level 2 are available and three are required to be OPERABLE when ATWS is required to be OPERABLE to ensure that no single instrument failure can preclude an ATWS-RPT from this Function on a valid signal. This Function is considered to be OPERABLE when a Level 2 trip signal originating in each of the ELCS channels is received by the RFC controllers.

3. SB&PC Reactor Steam Dome Pressure - High

Excessively high RPV pressure may rupture the RCPB. An increase in the RPV pressure during reactor operation compresses the steam voids and results in a positive reactivity insertion. This increases neutron flux and THERMAL POWER, which could potentially result in fuel failure and RPV overpressurization. The SB&PC Reactor Steam Dome Pressure - High Function initiates ATWS for transients that result in a pressure increase, counteracting the pressure increase by rapidly reducing core power generation. For the overpressurization event, the actions aid in the reduction of reactor power and, along with the safety/relief valves (S/RVs), limits the peak RPV pressure to less than the ASME Section III Code Service Level C limits (10.34 MPaG).

The SB&PC Reactor Steam Dome Pressure - High data originates from three pressure transmitters that monitor pressure in the reactor steam dome. Data from the three transmitters are received by the three SB&PC controllers via the plant data communication function. Data values for all three sensors are received by each of the three RFC controllers which use 2/3 logic to create ATWS-RPT data. Three channels of Reactor Steam Dome Pressure – High are available and are required to be OPERABLE when ATWS is required to be OPERABLE to ensure that no single instrument failure can preclude an initiation from this Function

BASES

APPLICABLE SAFETY ANALYSIS, LCO, and APPLICABILITY (continued)

3. SB&PC Reactor Steam Dome Pressure – High (continued)

on a valid signal. This Function is considered to be OPERABLE when reactor pressure data originating in each of the SB&PCs channels is received by all three RFC controllers.

The SB&PC Reactor Steam Dome Pressure - High Allowable Value is chosen to provide an adequate margin to the ASME Section III Code Service Level C allowable Reactor Coolant System pressure.

4. EOC-RPT Initiation.

The EOC-RPT initiation signal is a composite signal received from the RTIS. The allowable values, applicable safety analysis, and applicability of this Function is as described in the SSLC Sensor Instrumentation LCO (LCO 3.3.1.1) for the Turbine Stop Valve-Closure and Turbine Control Valve Fast Closure, Trip Oil Pressure-Low Functions.

Four channels of Turbine Steam Flow Rapid Shutoff EOC-RPT are available and three are required to be OPERABLE to provide confidence that no single instrument failure can preclude an EOC-RPT from this Function on a valid signal. This Function is considered to be OPERABLE when an EOC-RPT trip signal originating in each of the four RTIS division channels is received by all three of the RFC controllers.

5. RPT Initiation Function of the RFC.

The RFC must provide RPT initiation data to the ASD controllers. Each RFC sends RPT data to all of the ASD controllers. Three channels of RPT initiation per ASD must be OPERABLE to provide confidence that no single instrument failure can preclude an RPT from this Function on a valid signal.

There is no allowable value associated with this function.

6. Adjustable Speed Drive Pump Trip Actuation

The trip actuation devices in the ASD are required to be operable in order to complete the RIP trip Function. Each ASD uses signals from the RPT Function in all three of the RFC controllers. A trip condition from any two of the controllers will cause a trip of the associated RIP. Three channels of pump trip actuation per ASD must be OPERABLE when ATWS mitigation or EOC-RPT is required to be OPERABLE to provide confidence that no single instrument failure can preclude an RPT from this Function on a valid signal.

BASES

APPLICABLE SAFETY ANALYSIS, LCO, and APPLICABILITY (continued)

6. Adjustable Speed Drive Pump Trip Actuation (continued)

There is no allowable value associated with this function.

7 & 8. Adjustable Speed Drive Pump Trip Timers & Load Interrupters

The ASDs provide timers to cause a small delay before interrupting the devices that provide power to the RIPs. One timer channel and load driver in each ASD is available and required to be OPERABLE when ATWS mitigation or EOC-RPT is required to be OPERABLE. The Allowable Values are chosen to cause a trip of the pumps in a timely fashion while minimizing the effects of the transients caused by the pump trips.

9. RPS Scram Follow Signal

An RPS scram indicates that control rod insertion is required. Therefore, the FMCRD insertion portion of ATWS-ARI is initiated from these signals. The basis for this signal is as described in LCO 3.3.1.1, “SSLC Sensor Instrumentation”.

Both of the RCIS systems and the confirmatory logic receive scram follow data from the RPS portion of all four SSLC divisions. The ATWS-ARI trip logic will generate a trip data value when 2 of the four are in a tripped state. A trip will occur when needed and spurious trips cannot occur if three of the four data values are valid.

Four channels of RPS Scram Follow Signal are required to be OPERABLE when ATWS mitigation is required to be OPERABLE to ensure that no single instrument failure can preclude an ATWS-ARI from this Function on a valid signal. A channel of this Function is considered to be OPERABLE when a scram follow signal originating in each of the four SSLC divisions is received by each RCIS system and the FMCRD Insertion Confirmatory Logic.

10. Manual ATWS-ARI/SLCS Initiation.

The Manual Initiation push button channels introduce signals into the ATWS-ARI logic to provide manual initiation capability that is redundant to the automatic initiation. There are two push buttons and both must be activated to initiate ATWS-ARI.

BASES

APPLICABLE SAFETY ANALYSIS, LCO, and APPLICABILITY (continued)

10. Manual ATWS-ARI/SLCS Initiation. (continued)

There is no Allowable Value for this Function since the division is mechanically actuated based solely on the position of the push buttons. Two channels of the Manual Initiation Function are required to be OPERABLE when an ATWS-ARI is required to be OPERABLE.

11. ATWS-ARI Trip Initiation Function of the RFC.

The RFC must transmit ATWS-ARI initiation data to the RCIS and the FMCRD Insertion Confirmatory Logic. Three channels of this Function are required to be OPERABLE when ATWS mitigation is required to be OPERABLE to provide confidence that no single instrument failure can preclude an ATWS-ARI initiation from this Function on a valid signal. A channel of this Function is considered to be OPERABLE when the ATWS-ARI initiation signal originating in each of the three RFCs is received by each RCIS system and the FMCRD Insertion Confirmatory Logic.

There is no allowable value associated with this function.

12. ATWS-FMCRD Initiation Function of the RCIS.

The RCIS must transmit ATWS-ARI initiation data to the FMCRD controllers. Both of the RCIS channels send initiation signals to the FMCRD controllers. Two channels of this Function must be OPERABLE when ATWS mitigation is required to be OPERABLE to provide confidence that initiation of the FMCRD Insertion Function of ATWS-ARI will occur on a valid signal. A channel of this Function is considered to be OPERABLE when an insertion initiation signal originating in each RCIS is received by all associated FMCRD controllers.

There is no allowable value associated with this function.

13. FMCRD Insertion Confirmatory Logic

The FMCRD Insertion Confirmatory Logic must transmit ATWS-ARI initiation data to the FMCRD controllers. The logic sends initiation signals to all of the FMCRD controllers when trip data is received from 2 of the 3 RFCs or two of the four RPS scram follow signals.

One channel of this Function is required to be OPERABLE when ATWS mitigation is required to be OPERABLE to provide confidence that initiation of the FMCRD insertion Function of ATWS-ART will occur on a valid signal.

There is no allowable value associated with this function.

BASES

APPLICABLE SAFETY ANALYSIS, LCO, and APPLICABILITY (continued)

14. ATWS-ARI Valve Actuation

The RFC sends Actuation signals to Alternate Rod Insertion (ARI) valves that are intended to cause control rod insertion from the hydraulic drives. All three RFC channels send data to both of the ARI valves. The valves will open when Actuation signals are received from 2 of the 3 of the RFC channels. Three channels of valve actuation must be OPERABLE when ATWS mitigation is required to be OPERABLE to provide confidence that no single instrument failure can preclude an ATWS-ARI valve actuation on a valid signal.

There is no allowable value associated with this function.

15. FMCRD Emergency Insertion Invertor Control Logic

Each FMCRD controller receives emergency insertion signals from both of the RCIS channels and from the FMCRD Insertion Confirmatory Logic. The FMCRD motors will start when a signal is received from both RCIS channels and from the FMCRD Insertion Confirmatory Logic.

One channel of this Function per control rod must be OPERABLE when ATWS mitigation is required to be OPERABLE.

16. Recirculation Runback

This Function is provided to assure that fuel thermal limits are not exceeded for an inadvertent FMCRD run-in which could occur from failure in the FMCRD ATWS Logic.

Each RIP ASD receives a runback signal from both of the RCIS channels. The RIP will go to its minimum speed when a trip signal is received on both RCIS channels. Two channels of runback for each RIP ASD are required to be OPERABLE when ATWS are required to be OPERABLE.

ACTIONS

A Note has been provided to modify the ACTIONS related to ATWS and EOC-RPT instrumentation channels. Section 1.3, “Completion Times”, specifies that once a Condition has been entered, subsequent trains, subsystems, components, or variables expressed in the Condition, discovered to be inoperable or not within limits, will not result in separate entry into the Condition. Section 1.3 also specifies that Required Actions of the Condition continue to apply for each additional failure, with Completion Times based on initial entry into the Condition. However, the Required Actions for inoperable ATWS and EOC-RPT instrumentation

BASES

ACTIONS (continued)

channels provide appropriate compensatory measures for separate inoperable channels. As such, a Note has been provided that allows separate Condition entry for each inoperable ATWS and EOC-RPT instrumentation channel.

A.1.1, A.1.2.1, A.1.2.2, and A.2

These Actions assure that appropriate compensatory measures are taken when one channel of a Function that uses 2 out of 3 logic is inoperable. For these Functions, a failure in one channel could cause the initiation logic to become 2/2.

Action A.1.1 bypasses the inoperable channel which causes the logic to become 2/2 so the single failure criteria is not met. Therefore, operation in this condition is permitted only for a limited time. Action A.1.2.1 restores the inoperable channel. Action A. 1.2.2 requires the channel to be tripped if repairs are not made within the allowable Completion Time of Action A.1.2.1. Either of the Actions A.1.2.1 or A.1.2.2 provides adequate plant protection capability so no further action is required.

Action A.2 forces a trip condition in the inoperable channel which causes the initiation logic to become 1/2 for the Function. In this condition a single additional failure will not result in loss of protection and the availability of the Function to provide a plant protective action is adequate so no further action is required when the inoperable channel is placed in trip.

The Completion Time of six hours for implementing Actions A.1.1 and A.2 is based on providing sufficient time for the operator to determine which of the actions is appropriate. The Completion Time is acceptable because the probability of an event requiring the Function, coupled with a failure that would defeat the other channels associated with the Function, occurring within that time period is quite low. The self-test features of the logic provide a high degree of confidence that no undetected failures will occur within the allowable Completion Time.

Implementing Action A.1.1 causes the logic to be 2/2 so protective action capability is maintained as long as the other channels remain OPERABLE. Operation in this condition is restricted to 14 days (Actions A.1.2.1 and A.1.2.2 Completion Time). The probability of an event requiring the Function, combined with an undetected failure in a second channel of the Function, in the Completion Time is quite low. The self-test features of the logic provide a high degree of confidence that no undetected failures will occur within the allowable Completion Time.

BASES

ACTIONS (continued)

B.1

Required Action B.1 is intended to ensure that appropriate actions are taken if multiple, inoperable, untripped channels within the same Function that use 2/3 logic results in the Function not maintaining trip capability. A Function is considered to be maintaining trip capability when sufficient channels are OPERABLE or in trip such that the logic will generate a trip signal from the given Function on a valid signal.

The 72 hour Completion Time to restore two channels is sufficient for the operator to take corrective action and takes into account the likelihood of an event requiring actuation of the ATWS and EOC-RPT instrumentation during this period. Completion of Required Action B.1 places the system in the same state as in Condition A.

C.1.1, C.1.2.1. and C.1.2.2 and C.2

These Actions assure that appropriate compensatory measures are taken when one channel of a Function that uses 2/4 logic becomes inoperable. For these Functions, a failure in one channel will cause the actuation logic to become 1/3 or 2/3 depending on the nature of the failure (i.e failure which causes a channel trip vs. a failure which does not cause a channel trip). Therefore, an additional single failure will not result in loss of protection.

Action C.1.1 bypasses the inoperable channel which causes the logic to become 2/3 so a single failure will not result in loss of protection or cause a spurious initiation. Since overall redundancy is reduced, operation in this condition is permitted only for a limited time. Action C.1.2.1 restores the inoperable channel. Action C.1.2.2 forces a trip condition if repairs are not made within the allowable Completion Time of Action C.1.2.1. Either of the Actions C.1.2.1 or C.1.2.2 places plant protection capability within the design basis so no further action is required.

Action C.2 forces a trip condition in the inoperable channel which causes the initiation logic to become 1/3 for the Function. In this condition a single additional failure will not result in loss of protection and the availability of the Function to provide a plant protective action is at least as high as 2/4 trip logic. Since plant protection capability is within the design basis no further action is required when the inoperable channel is placed in trip.

BASES

ACTIONS (continued)

C.1.1, C.1.2.1. and C.1.2.2 and C.2 (continued)

The Completion Time of six hours for implementing Actions C.1.1 and C.2 is based on providing sufficient time for the operator to determine which of the actions is appropriate. The Completion Time is acceptable because the probability of an event requiring the Function, coupled with failures that would defeat two other channels associated with the Function, occurring within that time period is quite low. The self-test features of the logic provide a high degree of confidence that no undetected failures will occur within the allowable Completion Time.

Implementing Action C.2.1 provides confidence that Plant protection is maintained (2/3 logic) for an additional single instrument failure. However, with division I or III in bypass, a loss of the division II power supply could disable two of the remaining channels. Therefore, operation with one division in bypass is restricted to 30 days (Actions C.2.2.1 and C.2.2.2 Completion Time). The probability of an event requiring the Function coupled with undetected failures which cause the loss of two of the remaining OPERABLE divisions in the Completion Time is quite low. The self-test features of the logic provide a high degree of confidence that no undetected failures will occur within the allowable Completion Time.

D.1

Required Action D.1 is intended to ensure that appropriate actions are taken when two channels become inoperable for a Function that utilizes 2/4 logic. For this Condition the initiating logic becomes 2/2.

The 72 hour Completion Time to restore one of the inoperable channels is sufficient for the operator to take corrective action and takes into account the low likelihood of an event requiring actuation of the ATWS or EOC-RPT instrumentation during this period. Completion of Required Action D.1 places the system in the same state as in Condition C.

E.1

Required Action E.1 is intended to ensure that appropriate actions are taken when three or four channels become inoperable for a Function that utilizes 2/4 logic. For this Condition initiation from the Function is unavailable.

The 24 hour Completion Time to restore one of the inoperable channels is sufficient for the operator to take corrective action and takes into account the low likelihood of an event requiring actuation of the ATWS or EOC-RPT instrumentation during this period. Completion of Required Action E.1 places the system in the same state as in Condition D.

BASES

ACTIONS (continued)

F.1 and F.2

Required Action F.1 is intended to ensure that appropriate actions are taken for if the required Actions and associated Completion Times for the EOC-RPT Functions are not met. Required Action F.1 requires the MCPR limit for inoperable EOC-RPT, as specified in the COLR, to be applied, which restores the MCPR margin to within the limits assumed in the safety analysis.

Alternately the power level may be reduced to below the applicability of the EOC-RPT for the Function associated with the EOC-RPT (Required Action F.2).

The 2 hour Completion Time to implement the Required Actions is sufficient for the operator to determine which action is appropriate and to take corrective action, and takes into account the specified high reliability of the devices used to implement the EOC-RPT and the low likelihood of an event requiring actuation of the EOC-RPT instrumentation during this period.

G.1

This required Action assures that appropriate compensatory measures are taken for inoperable channels in Functions with one or two channels. Because of the low probability of an event requiring these Functions. 24 hours is provided to restore the inoperable functions.

H.1 and H.2

With any Required Action and associated Completion Time not met, the plant must be brought to a MODE or other specified condition in which the LCO does not apply. To achieve this status:

- the trip or runback capability of the associated RIP must be declared inoperable (Action H.1) for the ASD and runback actuation Functions.

- the plant must be brought to at least MODE 3 for Functions associated with ATWS (required Action H.2)

The allowed Completion Time for Action H.2 is reasonable, based on operating experience to reach the specified conditions from full power in an orderly manner and without challenging plant systems.

BASES

SURVEILLANCE REQUIREMENTS

The note on the surveillances refers to Table 3.3.4.1-1 for the applicability of each of the surveillances.

SR 3.3.4.1.1

Performance of the SENSOR CHANNEL CHECK once every 12 hours provides confidence that gross failure of instrumentation has not occurred. A SENSOR CHANNEL CHECK is a comparison of the parameter indicated on one instrumentation channel to a similar parameter on other instrumentation channels. It is based on the assumption that independent displays of the same parameter should read approximately the same value. Significant deviations between the instrument channels could be an indication of excessive instrument drift or other faults in one of the channels. A SENSOR CHANNEL CHECK will detect a gross channel failure; thus, it is key to verifying that the instrumentation continues to operate properly between each CHANNEL FUNCTIONAL TEST.

Agreement criteria are determined by the plant staff based on a combination of the channel instrument uncertainties, including indication and readability. If a channel is outside the match criteria, it may be an indication that the instrument has drifted outside its limit.

The specified high reliability and redundancy of the devices used to implement the functions provides confidence that failure of more then one instrumentation channel within the specified interval is rare. Thus, performance of the SENSOR CHANNEL CHECK provides confidence that undetected outright instrumentation channel failure is limited to the specified interval. The SENSOR CHANNEL CHECK supplements less formal, but more frequent, checks of channels during normal operational use of the displays associated with the required channels of this LCO.

As indicated in Table 3.3.4.1-1 this surveillance applies only to the SB&PC Reactor Dome Pressure - High, Reactor Vessel Water Level - Low, Level 2, and Feedwater Reactor Water Level - Low, Level 3 Functions. The equivalent surveillance for Turbine Steam Flow Rapid Shut off Functions are provided under the SSLC Sensor Instrumentation LCO (LCO 3.3.1.1) while the surveillance does not apply to the remaining Functions.

BASES

SURVEILLANCE REQUIREMENTS (continued)

SR 3.3.4.1.2

A CHANNEL FUNCTIONAL TEST is performed on each required channel to ensure that the entire channel will perform the intended function.

If the as found trip point is not within its required Allowable Value, the plant specific setpoint methodology may be revised, as appropriate, if the history and all other pertinent information indicate a need for the revision. The as left trip point shall be consistent with the assumptions of the current plant specific setpoint methodology.

The frequency of 92 days is based on the specified high reliability and redundancy of the devices used to implement the Functions, the specified low drift of the devices and the signal validation tests that are automatically and continuously performed on the channels. This surveillance for the Reactor Water Level - Low, Level 2, and Turbine Steam Flow Rapid Shutoff Functions must be performed in conjunction with the equivalent surveillances in the SSLC Sensor Instrumentation LCO (LCO 3.3.1.1).

SR 3.3.4.1.3

A CHANNEL CALIBRATION is a complete check of the instrument processing channel and the sensor. This test verifies that the channel responds to the measured parameter within the specified range and accuracy. CHANNEL CALIBRATION leaves the channel adjusted to account for instrument drifts between successive calibrations. Measurement and setpoint error historical determinations must be performed consistent with the plant specific setpoint methodology. The channel shall be left calibrated consistent with the assumptions of the setpoint methodology.

If the as found setpoint is not within its required Allowable Value, the plant specific setpoint methodology may be revised, as appropriate, if the history and all other pertinent information indicate a need for the revision. The setpoint shall be left set consistent with the assumptions of the current plant specific setpoint methodology.

BASES

SURVEILLANCE REQUIREMENTS (continued)

SR 3.3.4.1.3 (continued)

The 18 month frequency is based on the ABWR expected refueling interval and the need to perform this Surveillance under the conditions that apply during a plant outage to reduce the potential for an unplanned transient if the Surveillance were performed with the reactor at power. The low inherent drift of the devices used to implement the function provides confidence that the trip points will remain within the allowable values for the specified period.

The calibration of the Reactor Water Level-Low, Level 2 and Turbine Steam Flow rapid Shutoff Functions must be performed in conjunction with the equivalent surveillance in the SSLC Sensor Instrumentation LCO (LCO 3.3.1.1).

SR 3.3.4.1.4

The LOGIC SYSTEM FUNCTIONAL TEST demonstrates the OPERABILITY of the required trip logic for a specific Function. This test encompasses the RIP power interrupting devices and the ARI valves to provide complete testing of the assumed trip logic Function.

The 18 month frequency is based on the ABWR expected refueling interval and the need to perform this Surveillance under the conditions that apply during a plant outage to reduce the potential for an unplanned transient if the Surveillance were performed with the reactor at power. The high reliability of the devices used in the SSLC processing coupled with the DIVISIONAL FUNCTIONAL TESTS provide confidence that the specified frequency is adequate.

This surveillance for the Reactor Water Level - Low, Level 2 and Turbine Steam Flow Rapid Shutoff Functions must be performed in conjunction with the equivalent surveillances in the SSLC Sensor Instrumentation LCO (LCO 3.3.1.1).

SR 3.3.4.1.5

This SR ensures that the individual channel response times are less than or equal to the maximum values assumed in the accident analysis. The RPT SYSTEM RESPONSE TIME acceptance criteria are included in Reference 5.

BASES

SURVEILLANCE REQUIREMENTS (continued)

SR 3.3.4.1.5 (continued)

The 18 month frequency is based on the ABWR expected refueling interval and the need to perform this Surveillance under the conditions that apply during a plant outage and the potential for an unplanned transient if the Surveillance were performed with the reactor at power. The frequency is consistent with the fact that the nature of the devices used to implement the ATWS and RPT Functions are such that random failures of instrumentation components that cause serious response time degradation, but not channel failure, are infrequent occurrences.

SR 3.3.4.1.6

The tests in the COMPREHENSIVE FUNCTIONAL TEST (CoFT) verify proper SSLC system function, computer component function, software and hardware interactions, response times, and error handling. Error statistics, usage statistics, historical statistics, and various other measures are used to verify proper performance of the SSLC. Successful completion of these tests establishes OPERABILITY of SENSOR CHANNELS, LOGIC CHANNELS, and OUTPUT CHANNELS.

The ABWR protective action equipment is divided into segments to simplify software and hardware design and to limit the scope of effect of a given failure. A periodic test is performed to provide confidence that the segments and associated interconnections are operating within specified limits. The CoFT is designed to confirm that the current configuration and state of the system is acceptable and to determine the real-time performance of the overall system. Appropriately designed tests which include suitable data logging and analysis may be used to detect unexpected degradation.

The software based SSLC system contains many states, not all of which will occur over the life of the plant. The most important states are those that are required to mitigate accidents. Therefore, the CoFT focuses on usage testing, which exercises the overall system by simulating the input conditions under which the system is designed to perform, rather than coverage testing, which attempts to exercise all possible states of the system. Before plant start-up there is a high level of confidence that the SSLC system will operate as specified due to the extensive inspections, tests, and analyses conducted during the ITAAC preoperational phases. During the plant operating life, the CoFT assures that the protective action equipment is within its specified performance characteristics.

BASES

SURVEILLANCE REQUIREMENTS (continued)

SR 3.3.4.1.6 (continued)

The COMPREHENSIVE FUNCTIONAL TEST is intended to provide end to end testing. If necessary, other surveillances (e.g. CALIBRATION, OUTPUT CHANNEL TEST) that overlap the CoFT may be used to satisfy the requirements of the COMPREHENSIVE FUNCTIONAL TEST.

This surveillance overlaps or is performed in conjunction with the COMPREHENSIVE FUNCTIONAL TESTS in LCO 3.3.1.1, “SSLC Sensor Instrumentation”. The combined or overlapping tests provide complete end-to-end testing of the protective actions.

The 18 month frequency is based on the ABWR expected refueling interval and the need to perform this Surveillance under the conditions that apply during a plant outage to reduce the potential for an unplanned transient if the Surveillance were performed with the reactor at power. The high reliability of the devices used in the logic processing coupled with the CHANNEL FUNCTIONAL TESTs provide confidence that the specified frequency is adequate.

SR 3.3.4.1.7

A CHANNEL FUNCTIONAL TEST is performed on each manual ATWS-ARI channel to ensure that the entire manual trip channel will operate as intended.

This function uses a minimum of components, and the components have been proven highly reliable through operating experience. However, a relatively short surveillance interval of 7 days is used since availability of manual ATWS-ARI is important for providing a diverse means of inserting all of the control rods and the logic is 2/2. The probability of an event requiring manual ATWS-ARI coupled with a failure of one of the ATWS-ARI channels within this time period is very low.

REFERENCES

1. DCD Tier 2, Figure 15E.4-1, “ATWS Mitigation Logic.”
2. DCD Tier 2, Section 5.2.2, “Overpressure Protection.”
3. DCD Tier 2, Chapter 15, “Accident Analysis.”
4. DCD Tier 2, Appendix 15E, “ATWS Performance Evaluation.”
5. DCD Tier 2, Section 1.1.3.

BASES

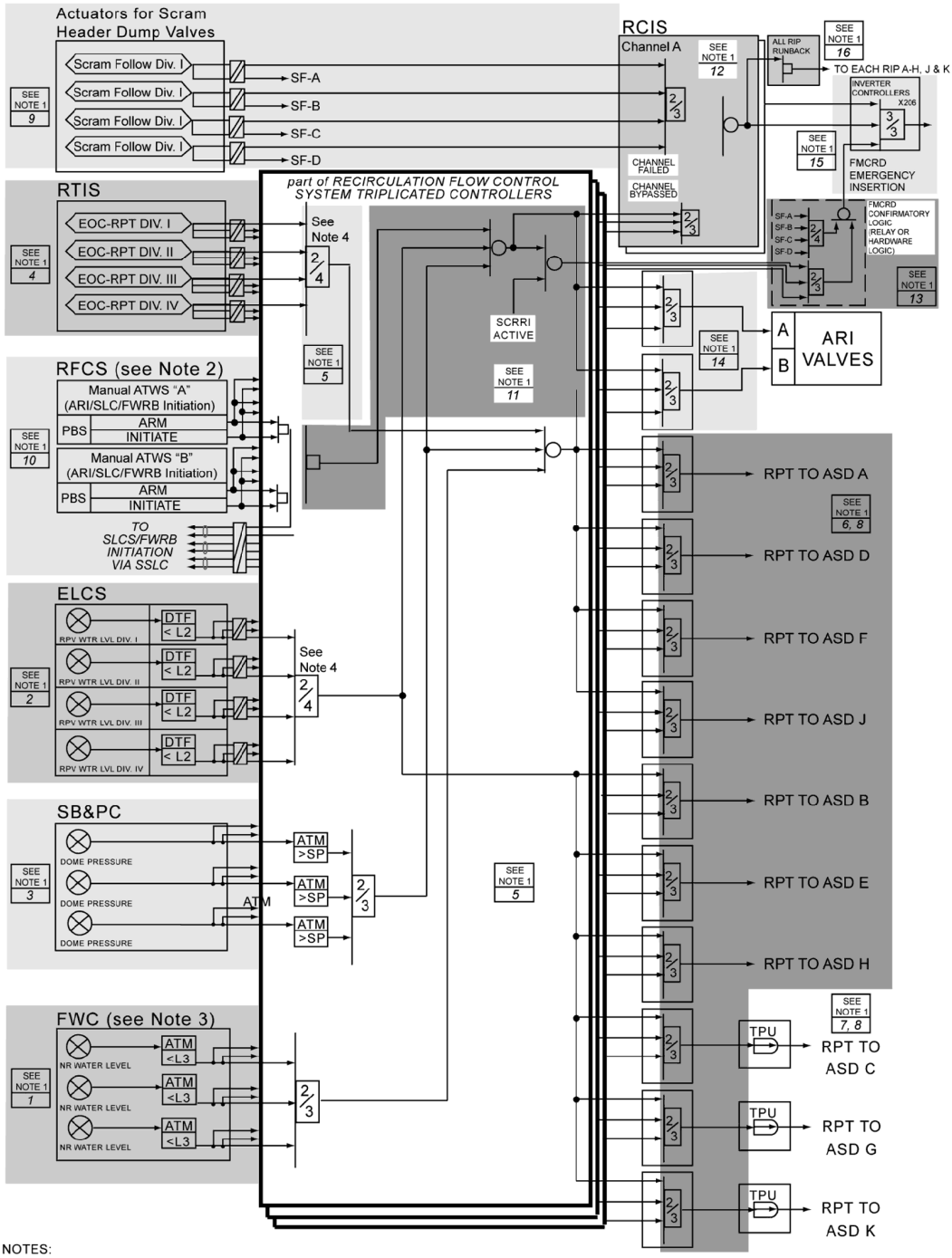

NOTES:
1. FUNCTION NUMBER AS LISTED IN TABLE 3.3.4.1-1 ATWS and EOC-RPT INSTRUMENTATION
2. FOR MANUAL SLC/FWRB FUNCTION, SEE FIGURE B 3.3.1.3-1 SLC and FWRB INSTRUMENTATION CHANNELS
3. 4-PUMP RPT ON L3 IS NOT AN ATWS MITIGATION EVENT
4. DIVISION-OF-SENSORS BYPASS APPLIES TO THIS VOTER

FIGURE 3.3.4.1-1 ATWS and EOC-RPT INSTRUMENTATION CHANNELS

B 3.3 INSTRUMENTATION

B 3.3.4.2 Feedwater Pump and Main Turbine Trip Instrumentation

BASES

BACKGROUND

The feedwater pump and main turbine trip instrumentation is designed to detect a potential failure of the Feedwater Level Control System that causes excessive feedwater flow.

The increased core inlet subcooling caused by the excess feedwater flow increases reactor power which reduces the margin to fuel thermal limits. Therefore, the feedwater pumps are tripped to terminate the event. The main turbine is also tripped to prevent damage to the turbine from increased water carryover that occurs when the reactor water level increases.

With excessive feedwater flow, the water level in the reactor vessel rises toward the high water level, Level 8 reference point, causing the trip of the four feedwater pump adjustable speed drives (ASDs) and the main turbine.

Reactor Vessel Water Level – High, Level 8 signals are provided by level sensors that sense the difference between the pressure due to a constant column of water (reference leg) and the pressure due to the actual water level in the reactor vessel (variable leg). Three channels of Reactor Vessel Water Level – High, Level 8 instrumentation provide input to a two-out-of-three initiation logic that trips the four feedwater pump ASDs and the main turbine. The channels include electronic equipment (e.g., digital trip logic) that compares measured input signals with pre-established setpoints. When the setpoint is exceeded, the channel outputs a trip signal, which then outputs a main turbine and feedwater pump ASD trip signal to the trip logic.

When reactor water level reaches the Level 8 trip setpoint, the Feedwater Control System (FWCS) sends a trip signal to the Turbine Control System to trip the turbine generator, and trip signals to the Condensate, Feedwater and Condensate Air Extraction (CF&CAE) System to trip all feed pumps and close the main feedwater discharge and feed pump bypass valves. This action is initiated to protect the turbine from damage from high moisture content in the steam caused by excessive carryover while preventing water level from rising any higher. The action also prevents over pressurization of the vessel by isolating the condensate pumps from the vessel. The feedwater and turbine generator trips are implemented by a fault tolerant digital controller (FTDC) that is independent of the FTDC that performs the level control function.

BASES

The feedwater pump and main turbine trip FTDC system is a triple redundant microprocessor based system. Three narrow range water level instrumentation channels provide one signal per sensor to each of the FTDC controllers. A “validated” level signal is generated within the FTDC and provided as input to a high level trip module where it is compared to the high level trip setpoint value. If the validated level signal exceeds the setpoint value, a high water level trip signal is generated.

The trip modules send a trip signal to digital controllers for each feedwater pump and the main turbine. The digital controllers have 2-out-of-3 logics (voters) for each feedwater pump and the main turbine control system. Trip actuation of the associated feedwater pump adjustable speed drive (ASD) or the main turbine control system is initiated on two high water level inputs to 2-out-of-3 logics.

A trip of the feedwater pump ASDs limits further increase in reactor vessel water level by limiting further addition of feedwater to the reactor vessel. A trip of the main turbine and closure of the stop valves protects the turbine from damage due to water entering the turbine.

APPLICABLE SAFETY ANALYSES

The feedwater pump and main turbine trip instrumentation is assumed to be capable of providing a feedwater pump and main turbine trip in the design basis transient analysis for a feedwater controller failure, maximum demand event (Ref. 1). The Level 8 trip indirectly initiates a reactor scram and EOC-RPT from the main turbine trip (above 40% RTP) and trips the feedwater pumps, thereby terminating the event. The reactor scram EOC-RPT mitigates the reduction in MCPR.

Feedwater and main turbine trip instrumentation satisfies Criterion 3 of the NRC Policy Statement.

LCO

The LCO requires three instrumentation channels and three digital controllers to be OPERABLE to ensure that no single instrument failure will prevent the feedwater pump ASDs and main turbine trip on a valid Level 8 signal. Two of the three digital controller trip modules are needed to provide trip signals in order for the feedwater and main turbine trips to occur. Each channel must have its setpoint set within the specified Allowable Value of SR 3.3.4.2.3. The Allowable Value is set to ensure that the thermal limits are not exceeded during the event. The actual setpoint is calibrated to be consistent with the applicable setpoint methodology assumptions. Nominal trip setpoints are specified in the setpoint calculations. The nominal setpoints are selected

BASES

LCO (continued)

to ensure that the setpoints do not exceed the Allowable Value between successive CHANNEL CALIBRATIONS. Operation with a trip setpoint less conservative than the nominal trip setpoint, but within its Allowable Value, is acceptable.

Trip setpoints are those predetermined values of output at which an action should take place. The setpoints are compared to the actual process parameter (e.g., reactor vessel water level), and when the measured output value of the process parameter exceeds the setpoint, the associated trip signal changes state. The analytic limits are derived from the limiting values of the process parameters obtained from the safety analysis. The Allowable Values are derived from the analytic limits, corrected for calibration, process, and some of the instrument errors. A channel is inoperable if its actual trip setpoint is not within its required Allowable Value. The trip setpoints are then determined accounting for the remaining instrument errors (e.g., drift). The trip setpoints derived in this manner provide adequate protection because instrumentation uncertainties, process effects, calibration tolerances, instrument drift, and severe environment errors (for channels that must function in harsh environments as defined by 10 CFR 50.49) are accounted for.

APPLICABILITY

The feedwater pump and main turbine trip instrumentation is required to be OPERABLE at ≥ 25% RTP to ensure that the fuel cladding integrity Safety Limit and the cladding 1% plastic strain limit are not violated during the feedwater controller failure, maximum demand event. As discussed in the Bases for LCO 3.2.1, “Average Planar Linear Heat Generation Rate (APLHGR),” and LCO 3.2.2, “MINIMUM CRITICAL POWER RATIO (MCPR),” sufficient margin to these limits exists below 25% RTP; therefore, these requirements are only necessary when operating at or above this power level.

ACTIONS

A Note has been provided to modify the ACTIONS related to the feedwater pump and main turbine trip instrumentation. Section 1.3, Completion Times, specifies that once a Condition has been entered, subsequent trains, subsystems, components, or variables expressed in the Condition, discovered to be inoperable or not within limits, will not result in separate entry into the Condition. Section 1.3 also specifies that Required Actions of the Condition continue to apply for each additional failure, with Completion Times based on initial entry into the Condition. However, the Required Actions for inoperable feedwater and main turbine trip instrumentation channels provide appropriate compensatory measures for separate inoperable channels. As such, a Note has been provided that allows separate Condition entry for each inoperable instrumentation channel or digital controller.

BASES

ACTIONS (continued)

A.1

This action assures that appropriate compensatory measures are taken when an instrumentation channel is inoperable. The detection of a failure of one instrumentation channel results in the validated water level being based upon the other two OPERABLE instrumentation channels.

Action A.1 restores the inoperable channel to OPERABLE status.

Operation in this Condition is restricted to 14 days. The Completion Time is acceptable because the probability of an event coupled with a failure that would defeat another channel occurring within the time period is low. The self-test features of the main turbine and feedpump trip logic provide a high degree of confidence that no undetected failures will occur within the allowable Completion Time.

B.1

This action assures that appropriate compensatory measures are taken when a digital controller is inoperable. A failure of one channel will cause the actuation logic to become 2/2. Required Action B.1 restores the inoperable channel to OPERABLE status.

Operation in this condition is restricted to 14 days. The Completion Time is acceptable because the probability of an event coupled with a failure that would defeat another channel occurring within the time period is low. The self test features of the main turbine and feedpump trip logic provide a high degree of confidence that no undetected failures will occur within the allowable Completion Time.

C.1

With two or more instrumentation channels inoperable, the feedwater pump and main turbine trip instrumentation cannot perform its design function (feedwater pump and main turbine trip capability is not maintained). Therefore, continued operation is only permitted for a 72 hour period, during which feedwater pump and main turbine trip capability must be restored. This requires two channels to be restored to OPERABLE status. If the required channels cannot be restored to OPERABLE status or placed in trip, Condition E must be entered and its Required Action taken.

The 72 hour Completion Time is sufficient for the operator to take corrective action, and takes into account the likelihood of an event requiring actuation of feedwater and main turbine trip instrumentation occurring during this period and the specified reliability of the triplicated fault-tolerant digital control system for the feedwater control.

BASES

ACTIONS (continued)

D.1

With two or more digital controllers inoperable, the feedwater pump and main turbine trip instrumentation cannot perform its design function (feedwater and main turbine trip capability is not maintained). Therefore, continued operation is only permitted for a 72 hour period, during which feedwater and main turbine trip capability must be restored. This requires two controllers to be OPERABLE. If the required controllers cannot be restored to OPERABLE status, Condition E must be entered and its Required Action taken.

The 72 hour Completion Time is sufficient for the operator to take corrective action, and takes into account the likelihood of an event requiring actuation of feedwater and main turbine trip instrumentation occurring during this period and the specified reliability of the triplicated fault-tolerant digital control system for the feedwater control.

E.1

With the required channels not restored to OPERABLE status, THERMAL POWER must be reduced to < 25% RTP within 4 hours. As discussed in the Applicability section of the Bases, operation below 25% RTP results in sufficient margin to the required limits, and the feedwater pump and main turbine trip instrumentation is not required to protect fuel integrity during the feedwater controller failure, maximum demand event. The allowed Completion Time of 4 hours is based on operating experience to reduce THERMAL POWER to < 25% RTP from full power conditions in an orderly manner and without challenging plant systems.

BASES

SURVEILLANCE REQUIREMENTS

SR 3.3.4.2.1

Performance of the CHANNEL CHECK once every 24 hours ensures that a gross failure of instrumentation has not occurred. A CHANNEL CHECK is a comparison of the parameter indicated on one channel to a similar parameter on other channels. It is based on the assumption that instrument channels monitoring the same parameter should read approximately the same value. Significant deviations between instrument channels could be an indication of excessive instrument drift in one of the channels, or something even more serious. A CHANNEL CHECK will detect gross channel failure; thus, it is key to verifying the instrumentation continues to operate properly between each CHANNEL FUNCTIONAL TEST.

Agreement criteria are determined by the plant staff based on a combination of the channel instrument uncertainties, including indication and readability. If a channel is outside the match criteria, it may be an indication that the instrument has drifted outside its limits.

The Frequency is based on operating experience that demonstrates channel failure is rare. Performance of the CHANNEL CHECK guarantees that undetected outright channel failure is limited to 24 hours. The CHANNEL CHECK supplements less formal, but more frequent, checks of channel status during normal operational use of the displays associated with the channels required by the LCO.

SR 3.3.4.2.2

A CHANNEL FUNCTIONAL TEST is performed on each required channel to ensure that the entire channel will perform the intended function. If the as found setpoint is not within its required Allowable Value, the plant specific setpoint methodology may be revised, as appropriate, if the history and all other pertinent information indicate a need for the revision. The setpoint shall be left set consistent with the assumptions of the current plant specific setpoint methodology.

The Frequency of 92 days is based on the system capability to automatically perform self-tests and diagnostics.

The Surveillance is modified by a Note to indicate that when the channel functional test is performed, entry into associated Conditions and Required Actions may be delayed for up to 2 hours. This Note is acceptable because when performing this test the trip module outputs are blocked so that the feedwater pumps and main turbine are not tripped.

BASES

SURVEILLANCE REQUIREMENTS (continued)

SR 3.3.4.2.3

CHANNEL CALIBRATION is a complete check of the instrument loop and the sensor. This test verifies the channel responds to the measured parameter within the necessary range and accuracy. CHANNEL CALIBRATION leaves the channel adjusted to account for instrument drifts between successive calibrations. Measurement and setpoint error historical determinations must be performed consistent with the plant specific setpoint methodology. The channel shall be left calibrated consistent with the assumptions of the setpoint methodology.

If the as found setpoint is not within its required Allowable Value, the plant specific setpoint methodology may be revised, as appropriate, if the history and all other pertinent information indicate a need for the revision. The setpoint shall be left set consistent with the assumptions of the current plant specific setpoint methodology.

The Frequency is based upon the assumption of an 18 month calibration interval in the determination of the magnitude of equipment drift in the setpoint analysis.

SR 3.3.4.2.4

The LOGIC SYSTEM FUNCTIONAL TEST demonstrates the OPERABILITY of the required trip logic for each feedwater pump and main turbine. The 18 month Frequency is based on the need to perform this Surveillance under the conditions that apply during a plant outage and the potential for an unplanned transient if the Surveillance were performed with the reactor at power. Operating experience has shown that these components usually pass the Surveillance when performed at the specified Frequency.

REFERENCES

1. DCD Tier 2, Section 15.1.

B 3.3 INSTRUMENTATION

B 3.3.5.1 Control Rod Block Instrumentation

BASES

BACKGROUND

Control rods provide a primary means for implementing reactivity changes. Control rod block instrumentation includes sensors, logic and associated electronic equipment, operator controls, data transmission paths, and load drivers needed to enforce control rod patterns that will provide confidence that specified fuel design limits are not exceeded for postulated transients and accidents. During operation above a specified Low Power Setpoint (LPSP), the Automated Thermal Limit Monitor (ATLM) provides protection for control rod withdrawal error events. During operations below the LPSP, control rod blocks from the Rod Worth Minimizer (RWM) enforce specific control rod sequences designed to mitigate the consequences of a rod withdrawal error (RWE). During shutdown conditions, control rod blocks from the Reactor Mode Switch – Shutdown Position ensure that all control rods remain inserted to prevent inadvertent criticalities.

The ATLM and RWM are subsystems of the Rod Control and Information System (RCIS). The RCIS is a non-safety system (category 3) but is made up of dual redundant channels to assure high availability. Both channels independently acquire all of the required data and perform identical functions. The RCIS functions are implemented on microprocessors with a high degree of segmentation within the system. The data needed by the RCIS is acquired from the RCIS Data Communication Function (DCF), or the Plant Data Network (PDN). The rod block logic is arranged so that a rod block from either channel will prevent rod withdrawal. APRM data received from all four NMS divisions is used to determine reactor power level for comparison with the LPSP to automatically disable and simultaneously enable the appropriate rod block function.

The purpose of the ATLM is to prohibit control rod withdrawal that would cause violation of the fuel thermal limits. The ATLM provides a rod block function to other RCIS subsystems to appropriately inhibit control rod withdrawal when reactor power is at or above the low power setpoint (LPSP).

The purpose of the RWM is to ensure control rod patterns during startup are such that only specified control rod sequences and relative positions are allowed over the operating range from all control rods inserted until reactor power is at the LPSP. The sequences effectively limit the potential amount and rate of reactivity increase during a RWE. The RWM, in conjunction with other RCIS subsystems, will initiate control rod

BASES

BACKGROUND (continued)

blocks when the actual sequence deviates beyond allowances from the specified sequence

With the reactor mode switch in the shutdown position, a control rod withdrawal block is applied to all control rods to ensure that the shutdown condition is maintained. This function prevents criticality resulting from inadvertent control rod withdrawal during MODE 3 or 4, or during MODE 5 when the reactor mode switch is required to be in the shutdown position. There are four divisions of the reactor mode switch-shutdown position rod block. Each RCIS logic receives data from all four divisions and will issue a rod block when any two of the mode switch-shutdown position divisional signals are active.

The thermal limits information calculated in the plant computer is based on various process parameters.

The ATLM and RWM Functions provide automatic control of rod sequencing to permit relatively rapid plant maneuvering. If the automatic capabilities are inoperable, plant maneuvering may proceed using alternate means to establish assure operation within prescribed limits. The alternate methods must be implemented using suitable procedures and plant state information that does not depend on the ATLM OPERABILITY.

APPLICABLE SAFETY ANALYSIS, LCO, and APPLICABILITY

1.a. Automated Thermal Limit Monitor

The ATLM is designed to prevent violation of the fuel thermal operating limits. The analytical methods and assumptions used for determining the ATLM rod block algorithms are summarized in Reference 2. A statistical analysis of rod withdrawals was performed to determine the fuel thermal performance response as a function of withdrawal distance and initial operating conditions. These analysis were used to establish the coefficients used in the ATLM algorithms for calculating rod block setpoints. The ATLM satisfies Criterion 3 of the NRC Policy Statement.

Two channels of the ATLM are available and are required to be OPERABLE to ensure that no single instrument failure can preclude a rod block from this Function. The OPERABILITY of the ATLM depends on the OPERABILITY of the inputs and devices required to produce a rod block. The required inputs and devices are as described in Reference 3.

The ATLM compares the calculated rod block setpoints in each of the ATLM core regions with the LPRM readings in the region to determine if a rod block is needed. The calculated setpoints include factors to

BASES

APPLICABLE SAFETY ANALYSIS, LCO, and APPLICABILITY (continued)

accommodate the uncertainties in the measured parameters used to perform the rod block setpoint calculations.

The ATLM is assumed to prevent the consequences of a Rod Withdrawal Error (RWE) event when operating with reactor power above 30% RTP. Below this power level, the consequences of an RWE event will not exceed the fuel thermal limits, and therefore the ATLM is not required to be OPERABLE. Therefore the LPSP allowable value must be 30% RTP or below to assure ATLM operability above 30% RTP.

1.b. Rod Worth Minimizer (RWM)

The RWM enforces the Ganged rod Withdrawal Sequence Restrictions (GWSR) to ensure that the initial conditions of the RWE analysis are not violated. The analytical methods and assumptions used in evaluating the RWE are summarized in Reference 1. The GWSR requires that control rods be moved in groups, with all control rods assigned to a specific group required to be within specified positions. Requirements that the control rod sequence is in compliance with GWSR are specified in LCO 3.1.6.

The RWM satisfies Criterion 3 of the NRC Policy Statement. The RWM is a backup to operator selection of rod sequences during manual operation and is a backup to the Reference Rod Pull Sequence during automatic operation. The system design prohibits automatic control rod sequencing operations when only one channel is operable (automatically switches to manual when one channel is inoperable). The OPERABILITY of the RWM depends on the OPERABILITY of the inputs and devices required to produce a rod block. The required inputs and devices are as described in Reference 3.

Required Actions of LCO 3.1.3 and LCO 3.1.6 may necessitate bypassing individual control rods to allow continued operation with inoperable control rods or to allow correction of a control rod pattern not in compliance with the GWSR. The RWM therefore provides the capability to bypass blocks to permit the actions required by the referenced LCOs.

Compliance with the GWSR, and therefore OPERABILITY of the RWM, is required in MODES 1 and 2 with THERMAL POWER below 10% RTP. The LPSP Allowable Value must be 10% RTP or above to ensure required operability of the RWM below 10% RTP. When THERMAL POWER is above 10% RTP there is no possible control rod configuration that results in a control rod worth that could exceed the fuel damage limit for the worst case RWE. In MODES 3 and 4, all control rods are required to be inserted in the core. In MODE 5, restrictions on

BASES

APPLICABLE SAFETY ANALYSIS, LCO, and APPLICABILITY (continued)

1.b. Rod Worth Minimizer (RWM) (continued)

control rod withdrawals in core cells containing fuel assemblies provides sufficient Shutdown Margin (SDM) to assure that the reactor is subcritical and the consequences of a RWE are within limits.

2. Reactor Mode Switch – Shutdown Position

During MODES 3 and 4, and during MODE 5 when the reactor mode switch is required to be in the shutdown position, the core is assumed to be subcritical; therefore, no positive reactivity insertion events are analyzed. The Reactor Mode Switch – Shutdown Position control rod withdrawal block ensures that the reactor remains subcritical by blocking control rod withdrawal, thereby preserving the assumptions of the safety analysis.

The Reactor Mode Switch – Shutdown Position Function satisfies Criterion 3 of the NRC Policy Statement.

Four channels are required to be OPERABLE to ensure that no single channel failure will preclude a rod block when required. No Allowable Value is applicable for this Function since the channels are mechanically actuated based solely on reactor mode switch position.

During shutdown conditions (MODE 3, 4, or 5) no positive reactivity insertion events are analyzed because control rod withdrawal blocks are provided to prevent criticality. Therefore, when the reactor mode switch is in the shutdown position, the control rod withdrawal block is required to be OPERABLE. During MODE 5, with the reactor mode switch in the refueling position and the RCIS GANG/SINGLE switch in the SINGLE position, the one-rod-out interlock (LCO 3.9.2) provides the required control rod withdrawal blocks.

ACTIONS

A.1 and A.2

When either ATLM becomes inoperable a rod block is issued and automatic RCIS actions prohibited by forcing the RCIS to be in the manual mode. Automatic operation can be restored only by restoring ATLM operation. Manual control of rod withdrawal (in either RCIS manual or semi-automatic mode) may proceed if the inoperable ATLM is placed in bypass. The 72 hour Completion Time for Action A.1 is based on the high reliability of the ATLM Function and provides sufficient time to effect repairs.

Alternately, plant maneuvering may continue if operation within thermal limits is verified by other suitable means as described above.

BASES

ACTIONS (continued)

B.1 and B.2

If both ATLMs become inoperable then there may be insufficient protection from erroneous rod withdrawals. Therefore, all control rod withdrawals are prohibited by inserting a rod block (Action B.1). Action B.2 requires confirmation that the rod block is in effect by attempting a rod movement or a rod gang movement.

C.1

When either RWM becomes inoperable a rod block is issued and automatic RCIS actions prohibited by forcing the RCIS to be in the manual mode. Automatic operation can be restored only by restoring RWM operation. Manual control rod withdrawal may proceed (in the RCIS manual or semi-automatic mode) if the inoperable RWM is placed in bypass. The 72 hour Completion Time is based on the high reliability of the RWM Function and provides sufficient time to effect repairs. The RWM is considered to remain OPERABLE when individual control rods are bypassed as required by LCO 3.1.3 or LCO 3.1.6.

D.1

If both RWMs become inoperable then there may be no protection from erroneous rod withdrawals. Therefore, all control rod withdrawals are prohibited until both RWMs are restored to OPERABLE status. Rod withdrawals are also prohibited if Required Action C is not implemented within the specified Completion Time to limit the amount of time operations are permitted to continue with one RWM inoperable.

E.1 and E.2

If there are failures of the Reactor Mode Switch – Shutdown Position Function the plant must be placed in a condition where the LCO does not apply. This is accomplished by suspending all control rod withdrawal immediately (Action E.1), and initiating full insertion of all insertable control rods in core cells containing one or more fuel assemblies (Action E.2). This will ensure that the core is subcritical, with adequate SDM ensured by LCO 3.1.1, “SHUTDOWN MARGIN (SDM).” Control rods in core cells containing no fuel assemblies do not affect the reactivity of the core and are therefore not required to be inserted. Action must continue until all insertable control rods in core cells containing one or more fuel assemblies are fully inserted.

BASES

SURVEILLANCE REQUIREMENTS

As noted at the beginning of the SR, the SRs for each Control Rod Block instrumentation Function are found in the SR column of Table 3.3.5.1-1.

SR 3.3.5.1.1 and SR 3.3.5.1.2

The CHANNEL FUNCTIONAL TESTS for the ATLM and RWM are performed using simulated data that emulates an action outside of permissible rod withdrawals and verifying that a rod block output occurs. If the rod blocks do not occur within the specified allowable values , the plant specific setpoint methodology may be revised, as appropriate, if the history and all other pertinent information indicate a need for the revision. The setpoint shall be left set consistent with the assumptions of the current plant specific setpoint methodology. As noted, the SRs are not required to be performed until 1 hour after specified conditions are met (e.g., after any control rod is withdrawn in MODE 2). This allows entry into the appropriate conditions needed to perform the required SRs.

The 92 day frequencies are based on the specified high reliability and low drift of the devices that are used to implement the RWM and ATLM. In Addition, the self test features provide confidence that most failures that occur between surveillances will be automatically detected. These features, coupled with the use of 2/2 logic before rod withdrawal is permitted, provides confidence that the frequency is adequate.

SR 3.3.5.1.3 and SR 3.3.5.1.4

The LPSP is the point where the transition is made between the ATLM and RWM functions. The Allowable Value for the LPSP is in the range of 10% to 30% RTP. The effective setpoint of the LPSP must be periodically confirmed.

The 18 month frequency is based on the ABWR expected refueling interval and the need to perform these Surveillance under the conditions that apply during a plant outage.

Since the LPSP function is specified to be very reliable and the setpoint is not susceptible to drift, a surveillance interval equal to the specified interval is adequate.

BASES

SURVEILLANCE REQUIREMENTS (continued)

SR 3.3.5.1.5

The CHANNEL FUNCTIONAL TEST for the Reactor Mode Switch – Shutdown Position Function is performed by attempting to withdraw any control rod with the reactor mode switch in the shutdown position and verifying a control rod block occurs. The Reactor Mode Switch – Refueling Position Function may be tested by attempting to withdraw control rods other than the rods under test while the scram test is active.

As noted in the SR, the Surveillance is not required to be performed until 1 hour after one hour after the condition of applicability occurs, since testing of the functions in any other condition would require lifting leads and installing jumpers. This allows entry into the modes and other conditions of applicability if the specified Frequency is not met per SR 3.0.2.

The 18 month frequency is based on the ABWR expected refueling interval and the need to perform this Surveillance under the conditions that apply during a plant outage. The specified high reliability of the devices used in the RCIS provide confidence that the specified frequency is adequate.

SR 3.3.5.1.6

The process computer calculations that provide setpoints to the ATLM uses various measured process parameters. A CHANNEL CHECK on the parameters is performed every 24 hours. These parameters are:

a. FMCRD cooling water flow,
b. Feedwater flow,
c. Feedwater temperature,
d. Recirculation flow,
e. RPV pressure,
f. CUW flow,
g. APRM, and
h. Selected LPRMs.

Performance of the CHANNEL CHECK provides confidence that a gross failure of a device in a channel has not occurred. A CHANNEL CHECK is a comparison of the parameter indicated in one channel to a similar parameter in a different channel. It is based on the assumption that channels monitoring the same parameter should read approximately the same value. Significant deviations between the channels could be an indication of excessive instrument drift on one of the channels or other channel faults.

BASES

SURVEILLANCE REQUIREMENTS (continued)

SR 3.3.5.1.6 (continued)

Agreement criteria are determined by the plant staff based on a combination of the channel instrument and parameter indication uncertainties.

The specified high reliability of each channel provides confidence that a channel failure will be rare. The CHANNEL CHECK supplements less formal, but more frequent, checks of channels during normal operational use of the displays associated with the channels required by the LCO.

SR 3.3.5.1.7

LCO 3.1.3 and LCO 3.1.6 may required individual control rods to be bypassed in RAPI to allow insertion of an inoperable control rod or correction of a control rod pattern not in compliance with GWSR. With the control rods bypassed in the RAPI Subsystem, the RWM will not control the movement of these bypassed control rods. To ensure the proper bypassing and movement of those affected control rods, a second licensed operator or other qualified member of the technical staff must verify the bypassing and movement of these control rods. Compliance with this SR allows the RWM to be OPERABLE with these control rods bypassed.

REFERENCES

1. DCD Tier 2, Section 15.4.1, “Rod Withdrawal Error - Low Power.”
2. DCD Tier 2, Section 15.4.2, “Rod Withdrawal Error.”
3. DCD Tier 2, Section 7.7.1.2, “Rod Control and Information System - Instrumentation and Controls.”

B 3.3 INSTRUMENTATION

B 3.3.6.1 Post Accident Monitoring (PAM) Instrumentation

BASES

BACKGROUND

The primary purpose of the PAM instrumentation is to display plant variables that provide information required by the control room operators during accident situations. This information provides the necessary support for the operator to take the manual actions for which no automatic control is provided and that are required for safety systems to accomplish their safety functions for Design Basis Events. The instruments that monitor these variables are designated as Type A, Category I, and non-Type A, Category I in accordance with Regulatory Guide 1.97 (Ref. 1).

The OPERABILITY of the Post Accident Monitoring Instrumentation ensures that there is sufficient information available on selected plant parameters to monitor and assess plant status and behavior following an accident. This capability is consistent with the recommendations of Reference 1.

APPLICABLE SAFETY ANALYSIS

The PAM instrumentation LCO ensures the OPERABILITY of Regulatory Guide 1.97, Type A, variables so that the control room operating staff can:

- Perform the diagnosis specified in the Emergency Operating Procedures (EOP). These variables are restricted to preplanned actions for the primary success path of Design Basis Accidents (DBAs) (e.g., loss of coolant accident (LOCA)); and
- Take the specified, preplanned, manually controlled actions for which no automatic control is provided, which are required for safety systems to accomplish their safety function.

The PAM instrumentation LCO also ensures OPERABILITY of Category I, non-Type A, variables. This ensures the control room operating staff can:

- Determine whether systems important to safety are performing their intended functions;
- Determine the potential for causing a gross breach of the barriers to radioactivity release;
- Determine whether a gross breach of a barrier has occurred; and
- Initiate action necessary to protect the public and to obtain an estimate of the magnitude of any impending threat.

BASES

APPLICABLE SAFETY ANALYSIS (continued)

The plant specific Regulatory Guide 1.97 analysis (Ref. 2) documents the process that identified Type A and Category I, non-Type A, variables.

PAM instrumentation that meets the definition of Type A in Regulatory Guide 1.97 satisfies Criterion 3 of the NRC Policy Statement. Category I, non-Type A, instrumentation is retained in the Technical Specifications (TS) because it is intended to assist operators in minimizing the consequences of accidents. Therefore, these Category I, non-Type A, variables are important for reducing public risk.

LCO

LCO 3.3.6.1 requires the OPERABLE Functions and channels as indicated in Table 3.3.6.1-1. All Functions, except for PCIV position, have at least two channels to ensure no single failure prevents the operators from being presented with the information necessary to determine the status of the unit and to bring the unit to, and maintain it in, a safe condition following an accident. Furthermore, multiple channels permit performing CHANNEL CHECKs during the post accident phase to confirm the validity of displayed information.

For the PCIV's, the important information is the status of the primary containment penetrations. The LCO for PCIV position describes the requirements and provides the basis for PCIV position indication. If a normally active PCIV is known to be closed and deactivated, position indication is not needed to determine status. Therefore, the position indication for valves in this state is not required to be OPERABLE.

Listed below is a discussion of each of the specified instrument Functions listed in Table 3.3.6.1-1. Data for most of the display Functions are transmitted to the operator displays via the four divisions of the Essential Communication Function (ECF). Exceptions are noted in the following discussions for each Function.

1. Reactor Steam Dome Pressure

Reactor steam dome pressure is a Category I variable provided to support monitoring of Reactor Coolant System (RCS) integrity and to verify operation of the Emergency Core Cooling Systems (ECCS). Four independent wide range pressure transmitters monitor pressure. Wide range displays are the primary indication used by the operator during an accident. Therefore, the PAM Specification deals specifically with this portion of the instrument channel.

BASES

LCO (continued)

2. and 3. Reactor Vessel Water Level - Wide Range, Fuel Zone

Reactor vessel water level is a Category I variable provided to support monitoring of core cooling and to verify operation of the ECCS. The wide range and fuel zone water level channels provide the PAM Reactor Vessel Water Level Function. The four wide range water level channels cover the range from the near top of the fuel to the steam lines and two fuel zone channels cover the range from below the core support plate to the top of the steam separator shroud. The display controller uses these channels to create a continuous display of reactor water level. These displays are the primary indication used by the operator during an accident. Therefore, the PAM Specification deals specifically with this portion of the instrument channel.

Either the hardwired or multiplexed displays of this Function may be used to satisfy the LCO.

4. Suppression Pool Water Level

Suppression pool water level is a Category I variable provided to detect a breach in the reactor coolant pressure boundary (RCPB). This variable is also used to verify and provide long term surveillance of ECCS function. Suppression pool water level measurement provides the operator with sufficient information to assess the status of the RCPB and to assess the status of the water supply to the ECCS. Suppression pool water level is monitored by four divisions of narrow range level instrumentation measuring from 0.5 meters above to 0.5 meters below normal water level, and two wide range instruments measuring from the centerline of the ECCS suction piping to the wetwell spargers. Suppression pool water level is continuously displayed in the control room. These displays are the primary indication used by the operator during an accident. Therefore, the PAM Specification deals specifically with this portion of the instrument channel.

5.a. Drywell Pressure, 5.b. Wetwell Pressure

Drywell and wetwell pressure are Type A, Category I variables provided to detect breach of the RCPB and to verify ECCS functions that operate to maintain RCS integrity. Requirements for monitoring of drywell pressure are specified for both narrow range and wide range. The narrow range monitoring requirement is satisfied in the existing essential safety system designs by the four divisions of drywell pressure instruments which provide inputs to the initiation of the Reactor Protection System (RPS) and the Emergency Core Cooling Systems (ECCS).

BASES

LCO (continued)

5.a. Drywell Pressure, 5.b. Wetwell Pressure (continued)

The requirement for unambiguous wide range drywell pressure monitoring are satisfied with two channels of drywell instrumentation and integration with two channels of wetwell pressure instrumentation. Given the existence of (1) the normal pressure suppression vent path between the drywell and wetwell and (2) the wetwell to drywell vacuum breakers, the long-term pressure within the drywell and wetwell will be approximately the same. Drywell and wetwell pressure signals are transmitted from separate pressure transmitters. Drywell and wetwell pressure is continuously displayed in the main control room. These displays are the primary indication used by the operator during an accident. Therefore, the PAM Specification deals specifically with this portion of the instrument channel.

Either the hardwired or multiplexed displays may be used to satisfy the LCO.

6. and 7. Drywell/Wetwell Area Radiation (High Range)

Drywell and wetwell radiation measurements and displays are provided to monitor for the potential of significant radiation releases and to provide release assessment for use by operators in determining the need to invoke site emergency plans. Two separate divisions of instrumentation are provided with both drywell and wetwell monitor channels in each division. Drywell and wetwell radiation are continuously displayed in the main control room. These displays are the primary indication used by the operator during an accident. Therefore, the PAM Specification deals specifically with this portion of the instrument channel.

8. Primary Containment Isolation Valve (PCIV) Position

PCIV position is provided for verification of containment integrity. In the case of PCIV position, the important information is the isolation status of the containment penetration.

The LCO requires two channels of PCIV position status per penetration to be OPERABLE for penetration flow paths with two active valves. For containment penetrations with only one active PCIV with control room indication, note (a) requires a single channel of valve position indication to be OPERABLE. This is sufficient to provide indications of the isolation status of each isolatable penetration via indicated status of the active valves and, where applicable, prior knowledge of passive valve or system boundary status.

BASES

LCO (continued)

8. Primary Containment Isolation Valve (PCIV) Position (continued)

If a penetration flow path is isolated by at least one closed and de-activated automatic valve, closed manual valve, blind flange, or check valve with flow through the valve secured, position indication for the PCIV(s) in the associated penetration flow path is not needed to determine status. Therefore, per footnote (b) in Table 3.3.6.1-1, the position indication for valves in an isolated penetration is not required to be OPERABLE.

Indication of the completion of the containment isolation function is provided by valve closed/not closed indications for individual valves on safety related displays. Annunciators are provided to alert the operator to any lines that may not be isolated.

For this plant, the PCIV position PAM instrumentation consists of position switches, associated connections and control room indication for active PCIVs. Check valves and manual valves are not required to have position indication.

9. and 10. Wide Range Neutron Flux

Wide range neutron flux is a Category I variable provided to verify reactor shutdown. The display controller uses data from four APRM channels and four SRNM channels to provide a display of neutron flux on the main control room panel with a range of 10-6% to 125% RTP. These displays are the primary indication used by the operator during an accident. Therefore, the PAM Specification deals specifically with this portion of the instrument channel.

11. Suppression Pool Water Temperature

Suppression Pool Water Temperature is a Category I variable provided to detect a condition that could potentially lead to containment breach, and to verify the effectiveness of ECCS actions taken to prevent containment breach. The suppression pool water temperature instrumentation allows operators to detect trends in suppression pool water temperature in sufficient time to take action for suppression pool temperature control. There are two required divisions of suppression pool temperature monitoring with a display channel in each division.

There are multiple temperature sensors in each division. The temperature sensors in each division are spatially distributed at specified circumferential positions and several elevations at each position to provide an indication of the average pool temperature. The temperature sensors are also located to monitor each relief valve discharge location.

BASES

LCO (continued)

11. Suppression Pool Water Temperature (continued)

The individual sensors and bulk average temperature may be selected for display in the control room. These displays are the primary indication used by the operator during an accident. Therefore, the PAM Specification deals specifically with this portion of the instrument channels.

12. Drywell Atmosphere Temperature

Drywell atmosphere temperature is a Category I variable provided to verify RCS and containment integrity and to verify the effectiveness of actions taken to remove energy from the containment. There are two divisions of drywell temperature monitoring with a display channel in each division. Temperature sensors are distributed throughout the drywell to provide confidence that there is an adequate representation of the state of the drywell. Control room displays of the temperatures are the primary indication used by the operator during an accident. Therefore, the PAM Specification deals specifically with this portion of the instrument channel.

13. Wetwell Atmosphere Temperature

Wetwell Atmosphere Temperature is a Category I variable provided to monitor wetwell atmospheric temperature. Multiple temperature sensors dispersed throughout the wetwell provide surveillance monitoring of temperatures in the wetwell, such that the required indication of bulk average wetwell atmosphere temperature is satisfied.

APPLICABILITY

The PAM instrumentation LCO is applicable in MODES 1 and 2. These variables are related to the diagnosis and preplanned actions required to mitigate DBAs. The applicable DBAs are assumed to occur in MODES 1 and 2. In MODES 3, 4, and 5, plant conditions are such that the likelihood of an event that would require PAM instrumentation is extremely low; therefore, PAM instrumentation is not required to be OPERABLE in these MODES.

ACTIONS

Note 1 has been added to the ACTIONS to exclude the MODE change restriction of LCO 3.0.4. This exception allows entry into the applicable MODE while relying on the Actions even though the Actions may eventually require plant shutdown. This exception is acceptable due to the passive function of the instruments, the operator's ability to diagnose an accident using alternate instruments and methods, and the low probability of an event requiring these instruments.

BASES

ACTIONS (continued)

A Note has also been provided to modify the ACTIONS related to PAM instrumentation channels. Section 1.3, Completion Times, specifies that once a Condition has been entered, subsequent trains, subsystems, components, or variables expressed in the Condition, discovered to be inoperable or not within limits, will not result in separate entry into the Condition. Section 1.3 also specifies that Required Actions of the Condition continue to apply for each additional failure, with Completion Times based on initial entry into the Condition. However, the Required Actions for inoperable PAM instrumentation channels provide appropriate compensatory measures for separate inoperable functions. As such, a Note has been provided that allows separate Condition entry for each inoperable PAM Function.

A.1

When a function has one required channel that is inoperable, the required inoperable channel must be restored to OPERABLE status within 30 days. The Completion Time is based on the specified high reliability of the remaining devices for monitoring the parameter and takes into account the low probability of an event requiring PAM instrumentation during this interval.

B.1

If the required actions and associated completion time of condition A is not met, this Required Action specifies requirements to submit a report to the NRC that identifies alternate method of monitoring used, discusses the results of the root cause evaluation of the inoperability and identifies proposed restorative actions. This Action and the Completion Time of 14 days are appropriate in lieu of a shutdown requirement since alternative Actions are identified before loss of functional capability, and given the low likelihood of plant conditions that would require information provided by this instrumentation.

C.1

When a Function has two required channels that are INOPERABLE then one channel must be restored to OPERABLE status within 7 days. The Completion Time of 7 days is based on the relatively low probability of an event requiring PAM instrument operation and the availability of alternate means to obtain the required information. Continuous operation with two required channels inoperable in a Function is not acceptable because the alternate indications may not fully meet all performance qualification requirements applied to the PAM instrumentation. Therefore, requiring

BASES

ACTIONS (continued)

C.1 (continued)

restoration of one inoperable channel of the Function limits the risk that the PAM Function will be in a degraded condition should an accident occur.

Multiple entry into the condition table causes Condition A to be invoked on completion of Action C.1 so appropriate additional action is taken.

D.1

This Required Action directs entry into the appropriate Condition referenced in Table 3.3.6.1-1. The applicable Condition referenced in the Table is Function dependent. If the required Action and associated Completion Time for Condition C are not met for a Function then Condition E is entered for that function and Table 3.3.6.1-1 used to transfer to the appropriate subsequent Condition.

E.1

For the PAM Functions in Table 3.3.6.1-1, if any Required Action and associated Completion Time of Condition C is not met, the plant must be placed in a MODE in which the LCO does not apply. This is done by placing the plant in at least MODE 3 within 12 hours.

The allowed Completion Times are reasonable, based on operating experience, to reach the required plant condition from full power conditions in an orderly manner and without challenging plant systems.

F.1

Since alternate means of monitoring the parameters to which this Condition applies have been developed and tested, the Required Action is to submit a report to the NRC instead of requiring a plant shut down. These alternate means may be temporarily installed if the normal PAM channel cannot be restored to OPERABLE status within the allotted time. The report provided to the NRC should discuss the alternate means used, describe the degree to which the alternate means are equivalent to the installed PAM channels, justify the areas in which they are not equivalent, and provide a schedule for restoring the normal PAM channels.

BASES

SURVEILLANCE REQUIREMENTS

The following SRs apply to each PAM instrumentation Function in Table 3.3.6.1-1, except SR 3.3.6.1.1 does not apply to Function 8.

SR 3.3.6.1.1

Performance of a CHANNEL CHECK once every 31 days ensures that a gross instrumentation failure has not occurred. A CHANNEL CHECK is a comparison of the parameter indicated on one instrumentation channel to a similar parameter on other instrumentation channels. It is based on the assumption that independent displays of the same parameter should read approximately the same value. Significant deviations between displays could be an indication of excessive instrument drift or other faults in one of the channels. A CHANNEL CHECK will detect gross channel failure; thus, it is key to verifying the instrumentation continues to operate properly between each CHANNEL CALIBRATION.

Agreement criteria are determined by the plant staff based on a combination of the channel instrument uncertainties, including isolation, indication, and readability. If a channel is outside the match criteria, it may be an indication that the sensor or the signal processing equipment has drifted outside its limit. Performance of the CHANNEL CHECK provides confidence that undetected outright channel failure is limited to 31 days.

The high reliability of the devices used to implement the PAM functions provides confidence that failure of more than one channel of a given function in any 31 day interval is rare. The CHANNEL CHECK supplements less formal, but more frequent, checks of channels during normal operational use of those displays associated with the required channels of this LCO.

SR 3.3.6.1.2

CHANNEL CALIBRATION is a complete check of the instrument loop including the sensor. The test verifies that the display reflects the measured parameter with the necessary range and accuracy. Calibration of Function 8 consists of assuring that the displays will respond to changes in the state of the valves.

As noted, neutron detectors are excluded from SENSOR CHANNEL CALIBRATION because of the difficulty of simulating a meaningful signal. Changes in neutron detector sensitivity are compensated for by performing the 7 day calorimetric calibration and the 1000 MW•d/t LPRM calibration specified in LCO 3.3.1.1, “SSLC Sensor Instrumentation.”

BASES

SURVEILLANCE REQUIREMENTS (continued)

SR 3.3.6.1.2 (continued)

The 18 month frequency is based on the ABWR expected refueling interval and the need to perform this Surveillance under the conditions that apply during a plant outage. The Frequency is adequate based on the low drift of the devices used to implement the Functions covered by this LCO. Note that calibration of these channels overlaps or is encompassed by calibrations required by other LCOs that address some of the same components required by the PAM displays.

REFERENCES

1. Regulatory Guide 1.97, “Instrumentation for Light-Water Cooled Nuclear Power Plants to Assess Plant and Environs Conditions During and Following an Accident,” June 2006.

2. DCD Tier 2, Section 7.5

B 3.3 INSTRUMENTATION

B 3.3.6.2 Remote Shutdown System

BASES

BACKGROUND

The Remote Shutdown System provides the control room operator with sufficient instrumentation and controls to place and maintain the plant in a safe shutdown condition from a location other than the control room. This capability is necessary to protect against the possibility of the control room becoming inaccessible. A safe shutdown condition is defined as MODE 3. With the plant in MODE 3, the High Pressure Core Flooder System, the safety/relief valves, and the Residual Heat Removal System Shutdown Cooling and Suppression Pool Cooling Modes can be used to remove core decay heat and meet all safety requirements. Additional systems assisting in the remote shutdown capability are portions of the Nuclear Boiler System, the Reactor Building Cooling Water System, the Reactor Building Service Water System, and the Electric Power Distribution System. The long term supply of water for the HPCF and the ability to operate shutdown cooling from outside the control room allow extended operation in MODE 3.

In the event that the control room becomes inaccessible, the operators can establish control at either of two remote shutdown panels (Division I and Division II) and place and maintain the plant in MODE 3. The two panels have a different complement of controls and indications, but either panel may be used to achieve and maintain MODE 3. The main difference between the two panels is that one of them uses HPCF and one SRV to regulate pressure and provide the decay heat removal and inventory make up. The other panel uses 3 SRVs, the LPFL, and the shutdown cooling mode of an RHR system to provide this capability.

The postulated conditions assumed to exist when the Main Control Room becomes inaccessible are 1) the plant is operating initially at or less than design power and 2) the plant is not experiencing any transient or accident situations. Therefore, complete control of engineered safeguard feature systems from outside the main control room is not required.

Even though the loss of offsite power is considered unlikely, the remote shutdown panels are powered from Class IE power system buses I and II so that backup AC power would be automatically supplied by the plant diesel generator. Manual controls of the diesel generator are also available locally.

BASES

BACKGROUND (continued)

All plant personnel are assumed to have evacuated the main control room and the main control room continues to be inaccessible for several hours. The initial event that causes the main control room to become inaccessible assumes the reactor operator can manually scram the reactor before leaving the main control room. If this is not possible, the capability of a backup means to achieve reactor reactivity shutdown is available.

The functions needed for remote shutdown control are transferred to the remote shutdown panels using manual switches that disable control of the functions from the main control room and enable control from the remote shutdown panels. Control signals are interrupted by the transfer devices at the hardwired, analog loop. Sensor signals which interface with the remote shutdown system for local display of process variables are continuously powered and available for monitoring at all times. Control signals are switched from ELCS I/Os directly to the remote shutdown panels by the transfer switch.

All necessary power supply circuits are also transferred to other sources. Remote shutdown control is not possible without actuation of the transfer devices. Operation of the transfer devices causes an alarm in the main control room. The remote shutdown control panels are located outside the main control room. Access to the panels is administratively and procedurally controlled.

The OPERABILITY of the Remote Shutdown System control and instrumentation Functions ensures that there is sufficient information available on selected plant parameters to place and maintain the plant in MODE 3 should the control room become inaccessible.

APPLICABLE SAFETY ANALYSIS

The Remote Shutdown System is required to provide equipment at appropriate locations outside the control room with a design capability to promptly shut down the reactor to MODE 3, including the necessary instrumentation and controls to maintain the plant in a safe condition in MODE 3.

The criteria governing the design and the specific system requirements of the Remote Shutdown System are located in 10 CFR 50, Appendix A, GDC 19 (Ref. 1).

The Remote Shutdown System is considered an important contributor to reducing the risk of accidents; as such, it has been retained in the Technical Specifications (TS) as indicated in the NRC Policy Statement.

BASES

LCO

The Remote Shutdown System LCO provides the requirements for the OPERABILITY of the instrumentation and controls necessary to place and maintain the plant in MODE 3 from a location other than the control room. The required instrumentation and controls are listed in Table 3.3.6.2-1 in the accompanying LCO. The Functions with two required channels have one on each RSS panel while those with one required channel are only provided on one of the RSS panels.

The controls, instrumentation, and transfer switches are those required for:

- Reactor pressure vessel (RPV) pressure control;
- Decay heat removal;
- RPV inventory control;
- Plant Monitoring; and
- Safety support systems for the above functions, including service water, component cooling water, and onsite power, including the diesel generators.

A Remote Shutdown System panel is OPERABLE if all instrument and controls on the panel are OPERABLE. In some cases, the required information or control capability is available from several alternate sources. In these cases, the Remote Shutdown panel is OPERABLE as long as one of the alternate information or control sources for each Function is OPERABLE.

The Remote Shutdown System instruments and control circuits covered by this LCO do not need to be energized to be considered OPERABLE. This LCO is intended to ensure that the instruments and control circuits will be OPERABLE if plant conditions require that the Remote Shutdown System be placed in operation.

1. Reactor Steam Dome Pressure.

Reactor steam dome pressure is an indication of Reactor Coolant System (RCS) integrity and is a necessary parameter for achieving and maintaining the reactor in MODE 3. A reactor pressure indication is provided on both of the RSS panels. Both channels are required to be OPERABLE to provide redundant capability to achieve MODE 3 from both RSS panels.

BASES

LCO (continued)

2, 3, and 4. HPCF B Flow/Controls/Discharge Pressure.

The HPCF system can be used to provide vessel inventory make up and decay heat removal while bringing the plant to MODE 3. The HPCF, in conjunction with other instruments and controls on the division II RSS panel, is sufficient to achieve and maintain MODE 3 from the Division II panel. The HPCF flow and pressure indications provide monitoring of HPCF operation. The controls provided are as given in reference 2. One channel of each Function is required to be OPERABLE to provide redundant capability to achieve MODE 3 from both RSS panels.

5 through 11. RHR A, B Control & Indication.

The RHR system can be used to provide vessel inventory make up, decay heat removal, and suppression pool cooling while bringing the plant to MODE 3. The RHR, in conjunction with other instruments and controls on the RSS panels, is sufficient to achieve and maintain MODE 3 from either panel. The RHR flow indications provide monitoring of RHR operation and the heat exchanger monitors provide indication of decay heat removal. The RHR controls and monitors are adequate to place it in the shutdown cooling mode. The controls provided are as given in reference 3. Two channels of each RHR Function (RHR A on the division I panel and RHR B on the division II panel) are required to be OPERABLE to provide redundant capability to achieve MODE 3 from both RSS panels.

12, and 13. RPV Wide Range/Shutdown Range Water Level.

Reactor vessel water level is provided to support monitoring of core cooling, to verify operation of the make up pumps, and is needed for satisfactory operator control of the make up pumps. The wide range water level channels cover the range from the near top of the fuel to near the top of the steam separators. The shutdown range provides indication from near the bottom of the separators to above the steam lines. RPV level is a necessary parameter for achieving and maintaining the reactor in MODE 3. One channel of each range is provided on each of the RSS panels. Both channels are required to be OPERABLE to provide redundant capability to achieve MODE 3 from both RSS panels.

BASES

LCO (continued)

14, 15, 16 and 17. Reactor Building Cooling Water Flow/Controls & Reactor Building Service Water Strainer Differential Pressure/Controls.

These parameters and controls are required to monitor and control the water supply for cooling the equipment needed to achieve MODE 3 and to provide containment heat removal. The Reactor Building Cooling Water controls provided are as given in reference 4 and the Reactor Building Service Water controls provided are as given in reference 5. One channel of each Function is provided on each of the RSS panels. Both channels of each Function are required to be OPERABLE to provide redundant capability to achieve MODE 3 from both RSS panels.

18. Suppression Pool Water Level.

Suppression pool water level provides information needed to assess the status of the RCPB and to assess the status of the water supply to the ECCS. The level indicators monitor the suppression pool level from the bottom of the ECCS suction lines to five feet above the normal suppression pool level. One channel of this Function is provided on each of the RSS panels. Both channels are required to be OPERABLE to provide redundant capability to achieve MODE 3 from both RSS panels.

19. Condensate Storage Pool Level.

Condensate Storage Level provides information needed to assess the status of the water supply to the HPCF. The indication is needed in order to achieve and maintain MODE 3 when using HPCF. A channel of this Function is provided on the division II RSS panel. The channel is required to be OPERABLE to achieve MODE 3 from the Division II RSS panel.

20. Suppression Pool Temperature.

Suppression Pool Temperature allows the operator to detect trends in suppression pool water temperature in sufficient time to take action to prevent steam quenching vibrations in the suppression pool. This Function is required in order to maintain MODE 3. One channel of this Function is provided on each of the RSS panels. Both channels are required to be OPERABLE to provide redundant capability to maintain MODE 3 from both RSS panels.

BASES

LCO (continued)

21. Electric Power Distribution Controls.

These Functions are provided so the operator can select various AC power sources for the equipment needed to achieve and maintain MODE 3. The Electric Power Distribution Controls provided are as given in references 6 and 7. One channel of each Function is provided on each of the RSS panels. Both channels of each Function are required to be OPERABLE to provide redundant capability to achieve MODE 3 from both RSS panels.

22. Diesel Generator System Interlock and Monitors.

This Function is provided to permit monitoring the status of the emergency DG. These monitors are required to permit the operator to manage the electric power distribution. The interlock disables DG start/stop from the control room to assure that the event that made the control room unavailable will not disrupt DG operation. One channel of this Function is provided on each of the RSS panels. Both channels of the Function are required to be OPERABLE to provide redundant capability to achieve MODE 3 from both RSS panels.

23. SRV Controls.

This Function is provide to permit the operator to perform a controlled depressurization and to maintain reactor pressure within limits. Three channels are provided on the division I RSS panel and one channel is provided on the division II panel. These channels, in conjunction with other controls and indications on the panels, are sufficient to achieve and maintain MODE 3 from either panel. Three channels on the division I panel and one channel on the division II panel are required to be OPERABLE to provide redundant capability to achieve MODE 3 from both RSS panels.

BASES

APPLICABILITY

The Remote Shutdown System LCO is applicable in MODES 1, and 2. This is required so that the plant can be placed and maintained in MODE 3 for an extended period of time from a location other than the main control room.

This LCO is not applicable in MODES 3, 4, and 5. In these MODES, the plant is already subcritical and in a condition of reduced Reactor Coolant System energy. Under these conditions, considerable time is available to restore necessary instrument control Functions if main control room instruments or control becomes unavailable. Consequently, the TS does not require OPERABILITY in MODES 3, 4, and 5.

ACTIONS

A Note is included that excludes the MODE change restriction of LCO 3.0.4. This exception allows entry into an applicable MODE while relying on the ACTIONS even though the ACTIONS may eventually require a plant shutdown. This exception is acceptable due to the low probability of an event requiring this system.

Note 2 has been provided to modify the ACTIONS related to Remote Shutdown System Functions. Section 1.3, Completion Times, specifies that once a Condition has been entered, subsequent trains, subsystems, components, or variables expressed in the Condition, discovered to be inoperable or not within limits, will not result in separate entry into the Condition. Section 1.3 also specifies that Required Actions of the Condition continue to apply for each additional failure, with Completion Times based on initial entry into the Condition. However, the Required Actions for inoperable Remote Shutdown System Functions provide appropriate compensatory measures for separate Functions. As such, a Note has been provided that allows separate Condition entry for each inoperable Remote Shutdown System Function.

A.1

Condition A addresses the situation where one or more required Functions are inoperable in one of the RSS divisions. This includes any Function listed in Table 3.3.6.2-1, as well as the control and transfer switches.

The Required Action is to restore the inoperable division of the Function to OPERABLE status within 90 days. The Completion Time is based on the specified high reliability of the devices used to implement the Functions and the low probability of an event that would require evacuation of the control room coupled with an undetected failure in the other RSS division.

BASES

ACTIONS (continued)

B.1

Condition A addresses the situation where one or more required Functions are inoperable in both of the RSS divisions. This includes any Function listed in Table 3.3.6.2-1, as well as the control and transfer switches.

The Required Action is to restore the Function (both divisions, if applicable) to OPERABLE status within 30 days. The Completion Time is based on the low probability of an event that would require evacuation of the control room.

C.1

If the Required Action and associated Completion Time of Condition A or B are not met, the plant must be brought to a MODE in which the LCO does not apply. To achieve this status, the plant must be brought to at least MODE 3 within 12 hours. The allowed Completion Time is reasonable, based on operating experience, to reach the required MODE from full power conditions in an orderly manner and without challenging plant systems.

SURVEILLANCE REQUIREMENTS

SR 3.3.6.2.1

Performance of the CHANNEL CHECK once every 31 days ensures that a gross failure of instrumentation has not occurred. A CHANNEL CHECK is a comparison of the parameter indicated on one channel to a similar parameter on other channels. It is based on the assumption that instruments monitoring the same parameter should read approximately the same value. Significant deviations between the instruments could be an indication of excessive instrument drift in one of them divisions or something even more serious. A CHANNEL CHECK will detect gross channel or division failure; thus, it is key to verifying the instrumentation continues to operate properly between each CHANNEL CALIBRATION.

Agreement criteria are determined by the plant staff based on a combination of the instrument uncertainties, including indications. If a channel is outside the acceptance criteria, it may be an indication that the sensor or the signal processing equipment has drifted outside its limit. Performance of a CHANNEL CHECK provides confidence that undetected outright channel failure is limited to 31 days.

The Frequency is based upon the high reliability of the devices used to implement the Functions.

BASES

SURVEILLANCE REQUIREMENTS (continued)

SR 3.3.6.2.2

SR 3.3.6.2.2 verifies each required Remote Shutdown System transfer switch and control circuit performs the intended function. This verification is performed from the remote shutdown panel and locally, as appropriate. This will ensure that if the control room becomes inaccessible, the plant can be placed and maintained in MODE 3 from the remote shutdown panel and the local control stations.

The 18 month frequency is based on the ABWR expected refueling interval and the need to perform this Surveillance under the conditions that apply during a plant outage. Operating experience demonstrates that Remote Shutdown System control divisions usually pass the Surveillance when performed at the specified Frequency.

SR 3.3.6.2.3

A CHANNEL CALIBRATION is a complete check of the instrument loop and the sensor. The test verifies the channel responds to measured parameter with the necessary range and accuracy.

The 18 month frequency is based on the ABWR expected refueling interval and the need to perform this Surveillance under the conditions that apply during a plant outage. The Frequency is adequate based on the specified low drift of the devices used to implement the Functions covered by this LCO. Note that calibration of these channels overlaps or is encompassed by calibrations required by other LCOs that address some of the same components required by the RSS indications.

REFERENCES

1. 10 CFR 50, Appendix A, GDC 19.
2. DCD Tier 2, Section 7.4.1.4.4(2)(a)
3. DCD Tier 2, Section 7.4.1.4.4(3)(a)
4. DCD Tier 2, Section 7.4.1.4.4(5)(a)
5. DCD Tier 2, Section 7.4.1.4.4(6)(a)
6. DCD Tier 2, Section 7.4.1.4.4(7)(a)
7. DCD Tier 2, Section 7.4.1.4.4(7)(b)

B 3.3 INSTRUMENTATION

B 3.3.7.1 Control Room Habitability Area (CRHA) Emergency Filtration (EF) System Instrumentation

BASES

BACKGROUND

The CRHA Emergency Filtration (EF) system is designed to provide a radiologically controlled environment to ensure the habitability of the main control area envelope for the safety of control room operators under all plant conditions. Two independent CRHA Emergency Filtration divisions are each capable of fulfilling the intended safety function. The instrumentation and controls for the CRHA Emergency Filtration System automatically initiate action to isolate or pressurize the Main Control Area Envelope (MCAE) to minimize the consequences of radioactive material in the main control area envelope environment.

Each division consists of an electric heater, prefilter, a high efficiency particulate air (HEPA) filter, an activated charcoal adsorber section, a second HEPA filter and two fans. Two redundant division of the CRHA system are required to ensure at least one is available assuming a single failure disables the other division. Should any component in one division fail, filtration can be performed by the other division. The OPERABILITY of each independent division is based on having adequate system flow and OPERABLE HEPA filters, charcoal adsorbers and heaters.

The CRHA EF system instrumentation has eight radiation monitoring sensors; four sensors monitoring each of two air intake ducts. The output logic is two-out-of-four logic in two independent trip systems. One trip system initiates one division, while the second trip system initiates the other division. Upon receipt of an actuation signal an operating control room normal HVAC system automatically switches to the emergency mode of operation to prevent infiltration of radioactive contaminated air into the main control area envelope. A system of dampers isolates the normal air intake and minimum outdoor air is mixed with recirculated air. The Emergency Filtration system is provided with both automatic and manual operation. If the operating EF division detects a low flow condition an automatic switchover to the other division will occur.

Each Emergency Filtration division has two flow switches, one in each discharge duct of the recirculation supply fan. A two-out-of-two logic low flow indication will initiate the automatic switchover to the other division.

BASES

BACKGROUND (continued)

The main control area envelope Ventilation Radiation Monitors are arranged in a two-out-of-four logic. The channels include electronic equipment that compares measured input signals with pre-established setpoints. When the setpoint is exceeded, the division output logic actuates, which then outputs a CRHA initiation signal. Each division receives an output initiation signal and will initiate if it is the division that shares its intake with the operating normal HVAC system.

APPLICABLE SAFETY ANALYSIS, LCO, and APPLICABILITY

The ability of the CRHA EF System to maintain the habitability of the MCAE is explicitly assumed for certain accidents as discussed in the ABWR safety analyses (Ref. 1 and 2). CRHA EF System operation ensures that the radiation exposure of control room personnel, through the duration of any one of the postulated accidents, does not exceed the limits set by GDC 19 of 10 CFR 50, Appendix A. CRHA HVAC instrumentation satisfies Criterion 3 of the NRC Policy Statement.

The OPERABILITY of the CRHA EF system instrumentation is dependent upon the OPERABILITY of the individual instrumentation Functions specified in Table 3.3.7.1-1. Each Function must have a required number of OPERABLE channels, with their setpoints within the specified Allowable Values, where appropriate. A channel is inoperable if its actual setpoint is not within its required Allowable Value. The actual setpoint is calibrated consistent with applicable setpoint methodology assumptions.

Allowable Values are specified for each CRHA HVAC and Emergency Filtration Function specified in the Table. Nominal trip setpoints are specified in the setpoint calculations. These nominal setpoints are selected to ensure that the setpoints do not exceed the Allowable Value between successive CHANNEL CALIBRATIONS. Operation with a trip setpoint that is less conservative than the nominal trip setpoint, but within its Allowable Value, is acceptable.

Trip setpoints are those predetermined values of output at which an action should take place. The setpoints are compared to the actual process parameter and, when the measured output value of the process parameter exceeds the setpoint, the associated device changes state. The analytic limits are derived from the limiting values of the process parameters obtained from the safety analysis. The Allowable Values are derived from the analytic limits, corrected for calibration, process, and some of the instrument errors. The trip setpoints are then determined, accounting for the remaining instrument errors (e.g., drift). The trip setpoints derived in this manner provide adequate protection because instrumentation and parameter indication uncertainties, process effects, calibration tolerances, instrument drift, and severe environment errors (for channels that must function in harsh environments as defined by 10 CFR 50.49) are accounted for.

BASES

APPLICABLE SAFETY ANALYSIS, LCO, and APPLICABILITY (continued)

The CRHA EF System is required to be OPERABLE in MODES 1, 2, and 3 and in MODES 4 and 5 during CORE ALTERATIONS, OPDRVs, and movement of irradiated fuel in the secondary containment to ensure that main control area envelope personnel are protected during a LOCA, fuel handling event, or a vessel draindown event.

1. Main Control Area Envelope Ventilation Radiation Monitors

The main control area envelope Ventilation Radiation Monitors measure radiation levels exterior to the inlet ducting of the MCAE. A high radiation level may pose a threat to MCAE personnel; thus, a detector indicating this condition automatically signals initiation of the Emergency Filtration division that shares its intake duct with the operating normal HVAC system.

The Main Control Area Envelope Ventilation Radiation Monitors Function consists of eight independent monitors; four monitors on the outdoor intake to each division. Four channels of Main Control Area Envelope Ventilation Radiation Monitors on each duct are available and are required to be OPERABLE to ensure that no single instrument failure can preclude Emergency Filter division initiation. The Allowable Value was selected to ensure protection of the control room personnel.

2. Emergency Filtration System Low Flow Switches

The Emergency Filtration division flow switches measure the recirculation fan air discharge flow in the duct. Low flow measurement is indicative of an inoperable recirculation fan. Each of the recirculation supply fans flow rate is monitored. Each supply fan is capable of delivery of 100% flow. Low flow in both supply fans (i.e., two-out-of-two logic) in one division will initiate an automatic switchover to the other emergency filtration division.

3. Emergency Filtration System Manual Switch

Each Emergency Filtration system can be manually initiated. There are two manual selection switches; one for each division.

BASES

ACTIONS

A Note has been provided to modify the ACTIONS related to CRHA instrumentation channels. Section 1.3, Completion Times, specifies that once a Condition has been entered, subsequent trains, subsystems, (components, or variables expressed in the Condition discovered to be inoperable or not within limits will not result in separate entry into the Condition. Section 1.3 also specifies that Required Actions of the Condition continue to apply for each additional failure, with Completion Times based on initial entry into the Condition. However, the Required Actions for inoperable CRHA HVAC instrumentation channels provide appropriate compensatory measures for separate inoperable channels. As such, a Note has been provided that allows separate Condition entry for each inoperable CRHA HVAC instrumentation channel.

A.1 and A.2

A instrumentation channel is considered to be OPERABLE when all associated instruments and devices are OPERABLE. A failure in one ventilation radiation monitor instrumentation channel will cause the trip logic to become 1/3 or 2/3 depending on the nature of the failure (i.e. failure which causes a channel trip vs. a failure which does not cause a channel trip). Therefore, an additional single failure will not result in loss of protection but could cause a spurious initiation of a protective action for additional failures that result in a tripped condition.

Action A.1 forces a trip condition on the inoperable instrumentation channel which causes the initiation logic to become 1/3. In this condition a single failure will not result in loss of protection. Action A.2 bypasses the inoperable instrumentation channel. This causes the logic for the function to become 2/3 so a single failure will not result in loss of protection or cause a spurious initiation. Since plant protection capability is maintained no further action is required when the inoperable instrumentation channel is placed in trip or in bypass.

The Completion Time of six hours for implementing Actions A.1 and A.2 is based on providing sufficient time for the operator to determine which of the actions is appropriate. The Completion Time is acceptable because the probability of an event requiring the Function coupled with a failure in two other instrumentation channels associated with the Function occurring within that time period is low.

BASES

ACTIONS (continued)

B.1 and B.2

Condition B occurs when two instrumentation channels for the MCAE ventilation radiation monitors become inoperable. For these conditions it is appropriate to place one channel in trip and the other in bypass. The trip logic then becomes 1/2 so a single failure in the remaining operable channels would not cause loss of protection. However, a single failure could result in a spurious trip.

Since plant protection is maintained, there is a low probability of an even requiring initiation, and manual initiation capability is maintained operation in this condition for an extended period is acceptable. A maximum completion time corresponding to the next channel functional test is acceptable since the channel functional test interval criteria is a suitable criteria for operation in this condition.

C.1 and C.2

This Condition represents a case where an automatic or manual Function is 1/1 or is completely unavailable. In this condition the single failure criteria for automatic action is not met. For this condition it is appropriate to declare the division inoperable. This Condition also occurs if the Required Action and associated Completion Times for Condition A or B are not met.

The Completion Time provides a reasonable amount of time to perform the required actions. The Completion Time is acceptable because the probability of an event requiring the Function within that time period is quite low.

SURVEILLANCE REQUIREMENTS

As noted at the beginning of the SRs, the SRs for each CRHA and Emergency Filtration Instrumentation Function are located in the SRs column of Table 3.3.7.1-1.

SR 3.3.7.1.1

Performance of the CHANNEL CHECK once every 24 hours ensures that a gross failure of instrumentation has not occurred. A CHANNEL CHECK is a comparison of the indicated parameter for one instrument channel to a similar parameter on other channels. It is based on the assumption that instrument channels monitoring the same parameter should read approximately the same value. Significant deviations

BASES

SURVEILLANCE REQUIREMENTS (continued)

SR 3.3.7.1.1 (continued)

between the instrument channels could be an indication of excessive instrument drift in one of the channels or other channel faults. A CHANNEL CHECK will detect gross channel failure; thus, it is key to verifying the instrumentation continues to operate properly between each CHANNEL FUNCTIONAL TEST.

Agreement criteria are determined by the plant staff based on a combination of the channel instrument and parameter indication uncertainties.

The Frequency is based upon operating experience that demonstrates channel failure is rare. Thus, performance of the CHANNEL CHECK ensures that undetected outright channel failure is limited to 24 hours. The CHANNEL CHECK supplements less formal, but more frequent, checks of channel status during normal operational use of the displays associated with channels required by the LCO.

SR 3.3.7.1.2

A CHANNEL FUNCTIONAL TEST is performed on each required channel to ensure that the entire channel will perform the intended function and that the setpoints in the initiation logic devices are correct.

The Frequency of 92 days is based on requiring the Emergency Filtration train to operate for a specified duration every 92 days.

SR 3.3.7.1.3

A CHANNEL CALIBRATION is a complete check of the instrument channel and the sensor. This test verifies the channel responds to the measured parameter within the necessary range and accuracy. CHANNEL CALIBRATION leaves the channel adjusted to account for instrument drifts between successive calibrations. Measurement and setpoint error historical determinations must be performed consistent with the plant specific setpoint methodology. The channel shall be left calibrated consistent with the assumptions of the setpoint methodology.

If the as found trip points (fixed or variable) is not within its Allowable Value, the plant specific setpoint methodology may be revised, as appropriate, if the history and all other pertinent information indicate a need for the revision. The setpoint shall be left set consistent with the assumptions of the current plant specific setpoint methodology.

BASES

SURVEILLANCE REQUIREMENTS (continued)

SR 3.3.7.1.3 (continued)

The 18 month frequency is based on the ABWR expected refueling interval and the need to perform this Surveillance under the conditions that apply during a plant outage. The 18 month frequency must be supported with a setpoint analysis that includes a drift allowance commensurate with this frequency.

SR 3.3.7.1.4

The LOGIC SYSTEM FUNCTIONAL TEST demonstrates the OPERABILITY of the initiation logic for a specific division. The system functional testing performed in LCO 3.7.4, “Control Room Habitability Area (CRHA) Emergency Filtration (EF) System,” overlaps this Surveillance to provide complete testing of the assumed safety function.

The 18 month frequency is based on the ABWR expected refueling interval and the need to perform this Surveillance under the conditions that apply during a plant outage. The high reliability of the devices used in the signal processing coupled with the CHANNEL FUNCTIONAL TEST provides confidence that the specified frequency is adequate.

REFERENCES

1. DCD Tier 2, Section 6.4.

2. DCD Tier 2, Chapter 15.

B 3.3 INSTRUMENTATION

B 3.3.8.1 Electric Power Monitoring

BASES

BACKGROUND

The Power Monitor is provided to isolate the Vital AC bus from the constant frequency constant voltage (CVCF) power supply in the event of overvoltage, undervoltage, overfrequency, or underfrequency. This system protects the loads connected to the Vital AC bus against unacceptable voltage and frequency conditions (Ref. 1) and forms an important part of the primary success path for the essential safety circuits. Some of the essential equipment powered from the Vital AC buses includes the RPS logic, scram solenoids, MSIV solenoids, and various valve isolation logic.

The Power Monitor will detect any abnormal high or low voltage or high or low frequency condition in the outputs of the CVCF power supply within the division and will de-energize its respective Vital AC bus, thereby causing all safety functions normally powered by this bus to de-energize.

In the event of a low voltage or overfrequency condition for an extended period of time, the scram solenoids can chatter and potentially lose their pneumatic control capability, resulting in a loss of primary scram action.

In the event of an overvoltage or underfrequency condition for an extended period of time, the RPS logic relays and scram solenoids, as well as the main steam isolation valve solenoids, may experience a power dissipation higher than their design value. If the condition persists for an extended time period, it may cause equipment degradation and the loss of plant safety function.

Two redundant Class 1E circuit breakers are connected in parallel between each Vital AC bus and its CVCF power supply. Each of these circuit breakers has an associated set of Class IE overvoltage, undervoltage, overfrequency, and underfrequency sensing logic. Together, a circuit breaker and its sensing logic constitute an Electric Power monitoring Assembly (EPA). If the output of the CVCF power supply exceeds the predetermined limits of overvoltage, undervoltage, overfrequency, or underfrequency, a trip coil driven by the EPA logic circuitry opens the associated circuit breaker. When both EPA circuit breakers open power is lost to the associated CVCF.

BASES

APPLICABLE SAFETY ANALYSIS

Power monitoring is necessary to meet the assumptions of the safety analyses by ensuring that the equipment powered from the Vital AC buses can perform its intended function. Power monitoring provides protection to the RPS and other systems that receive power from the Vital AC buses, by disconnecting the RPS and other systems from the power supply under specified conditions that could damage the Vital AC bus powered equipment.

Power monitoring satisfies Criterion 3 of the NRC Policy Statement.

LCO

The OPERABILITY of each power monitor is dependent upon the OPERABILITY of the overvoltage, undervoltage, overfrequency, and underfrequency logic, as well as the OPERABILITY of the associated circuit breaker. One power monitor with two electric power monitoring assemblies are required to be OPERABLE for each inservice CVCF power supply. The redundant EPAs of the electric power monitor ensures that no single power monitor failure or no single CVCF power supply failure can preclude the function of Vital AC bus powered components. Each inservice electric power monitoring assembly's trip logic setpoints are required to be within the specific Allowable Value. The actual setpoint is calibrated consistent with applicable setpoint methodology assumptions.

Allowable Values are specified for each electric power monitoring assembly trip logic (refer to SR 3.3.8.1.2). Nominal trip setpoints are specified in the setpoint calculations. The nominal setpoints are selected to ensure that the setpoints do not exceed the Allowable Value between CHANNEL CALIBRATIONS. Operation with a trip setpoint less conservative than the nominal trip setpoint, but within its Allowable Value, is acceptable. A channel is inoperable if its actual trip setpoint is not within its required Allowable Value. Trip setpoints are those predetermined values of output at which an action should take place. The setpoints are compared to the actual process parameter (e.g., overvoltage), and when the measured output value of the process parameter exceeds the setpoint, the associated device (e.g., trip unit) changes state. The analytic limits are derived from the limiting values of the process parameters obtained from the safety analysis. The Allowable Values are derived from the analytic limits, corrected for calibration, process, and some of the instrument errors. The trip setpoints are then determined, accounting for the remaining instrument errors (e.g., drift). The trip setpoints derived in this manner provide adequate protection because instrumentation uncertainties, process effects, calibration tolerances, instrument drift, and severe environment errors (for channels that must function in harsh environments as defined by 10 CFR 50.49) are accounted for.

BASES

LCO (continued)

The Allowable Values for the instrument settings are based on the power supply providing 60 Hz ± 5%, and 120 V ± 10%.

APPLICABILITY

The operation of the power monitor is essential to disconnect the Vital AC bus powered components from the CVCF power supply during abnormal voltage or frequency conditions. Since the degradation of a Class 1E source supplying power to the Vital AC bus can occur as a result of certain postulated random single failures, the OPERABILITY of the power monitor is required when the Vital AC bus powered components are required to be OPERABLE. This results in the Power Monitor OPERABILITY being required in MODES 1, 2, and 3, and MODES 4 and 5 with any control rod withdrawn from a core cell containing one or more fuel assemblies or with both residual heat removal (RHR) shutdown cooling isolation valves open.

ACTIONS

A.1

If one electric power monitoring assembly for an inservice power supply (CVCF) is inoperable, the OPERABLE assembly will still provide protection to the Vital AC bus powered components under degraded voltage or frequency conditions provided the circuit breaker associate with the inoperable assembly is placed in the tripped (open) position. In this condition, 1 hour is allowed to place the associated circuit breaker in the tripped position. The 1 hour Completion Time is sufficient for the plant operations personnel to take corrective actions. If the associated circuit breaker is not placed in the tripped position, the Required Action is not met and the required action of Condition C shall be followed.

B.1

If both electric power monitoring assemblies for an inservice CVCF are inoperable, the associated CVCF power supply will provide unmonitored voltage and frequency to the Vital AC bus powered components. Therefore, only a limited time (72 hours) is allowed to restore one of two inoperable assembly(s) to OPERABLE status. If one of the two inoperable assembly(s) cannot be restored to OPERABLE status, the associated power supply must be removed from service (Required Action B.1). This places the Vital AC bus in a safe condition.

The 72 hour Completion Time takes into account the low probability of an event (requiring Power Monitor protection) occurring during this period. It allows time for plant operations personnel to take corrective actions or to place the plant in the required condition in an orderly manner and without challenging plant systems.

BASES

ACTIONS (continued)

B.1 (continued)

Alternatively, if it is not desired to remove the power supply(s) from service (e.g., as in the case where removing the power supply(s) from service would result in a scram or isolation), Condition C or D, as applicable, must be entered and its Required Actions taken.

C.1 and C.2

If any Required Action and associated Completion Time of Condition A or B is not met in MODE 1, 2, or 3, a plant shutdown must be performed. This places the plant in a condition where minimal equipment, powered through the inoperable electric power monitoring assembly(s) (power monitor), is required and ensures that the safety function of the RPS (e.g., scram of control rods) is not required. The plant shutdown is accomplished by placing the plant in MODE 3 within 12 hours and in MODE 4 within 36 hours. The allowed Completion Times are reasonable, based on operating experience, to reach the required plant conditions from full power conditions in an orderly manner and without challenging plant systems.

D.1, D.2.1, and D.2.2

If any Required Action and associated Completion Time of Condition A or B are not met in MODE 4 or 5, with any control rod withdrawn from a core cell containing one or more fuel assemblies or with both isolation valves of a RHR shutdown cooling subsystem open, the operator must immediately initiate action to fully insert all insertable control rods in core cells containing one or more fuel assemblies (Required Action D.1). This Required Action results in the least reactive condition for the reactor core and ensures that the safety function of the RPS (e.g., scram of control rods) is not required.

In addition, action must be immediately initiated to either restore one of two electric power monitoring assembly to OPERABLE status for the inservice power source supplying the required instrumentation powered from the Vital AC bus (Required Action D.2.1) or to isolate the RHR Shutdown Cooling System (Required Action D.2.2). Required Action D.2.1 is provided because the RHR Shutdown Cooling System(s) may be needed to provide core cooling. All actions must continue until the applicable Required Actions are completed.

BASES

SURVEILLANCE REQUIREMENTS

SR 3.3.8.1.1

A CHANNEL FUNCTIONAL TEST is performed on each overvoltage, undervoltage, overfrequency, and underfrequency channel to ensure that the entire channel will perform the intended function.

The 92 day frequency is based on the specified high reliability and low drift of the devices that are used to implement the Functions.

SR 3.3.8.1.2

CHANNEL CALIBRATION is a complete check of the instrument loop and the sensor.

The Frequency is based upon the assumption of an 18 month calibration interval in the determination of the magnitude of equipment drift in the setpoint analysis.

SR 3.3.8.1.3

Performance of a system functional test demonstrates a required system actuation from a simulated or actual signal. The logic of the system will automatically trip open the associated power monitoring assembly circuit breaker. Only one signal per power monitoring assembly is required to be tested. This Surveillance overlaps with the CHANNEL CALIBRATION to provide complete testing of the safety function. The system functional test of the Class 1E circuit breakers is included as part of this test to provide complete testing of the safety function. If the breakers are incapable of operating, the associated electric power monitoring assembly would be inoperable.

The 18 month Frequency is based on the need to perform this Surveillance under the conditions that apply during a plant outage and the potential for an unplanned transient if the Surveillance were performed with the reactor at power. Operating experience has shown that these components usually pass the Surveillance when performed at the 18 month Frequency.

REFERENCES

1. DCD Tier 2, Section 8.3.1.1.4.2.2.

B 3.3 INSTRUMENTATION

B 3.3.8.2 Reactor Coolant Temperature Monitoring

BASES

BACKGROUND	Reactor coolant temperature monitoring is provided to monitor the progress and the effectiveness of residual decay heat removal operations. The RHR System consist of three subsystems each of which can be operated in the Shutdown Cooling Mode for decay heat removal. RHR shutdown cooling operation can be initiated during a reactor shutdown when reactor pressure decreases to the shutdown cooling interlock pressure (approximately 0.93 MPaG). RHR shutdown cooling operation is normally required to maintain the reactor in cold shutdown conditions (MODE 4) and to maintain the reactor coolant temperature as low as possible for refueling operations in MODE 5. The temperature monitoring instrumentation will provide temperature indication and trends to the operator in the main control room during RHR decay heat removal operation. One temperature monitoring transmitter for each RHR channel is available to monitor reactor coolant temperature at the inlet to the RHR heat exchanger. These monitoring channels will also detect the loss of decay heat removal capability during low power operation and shutdown conditions. Sufficient time is available to the operator to take corrective actions when required to minimize the potential for a complete loss of decay heat removal capability.
APPLICABLE SAFETY ANALYSIS	No specific safety analyses were performed for loss of decay heat removal capability. DCD Tier 2, Chapter 19, “Probability Risk Assessment (PRA)”, evaluates the risk due to loss of decay heat removal. The reactor coolant temperature monitoring instrumentation provides the necessary information and trending information for monitoring the effectiveness of shutdown cooling operation and for detecting loss of decay heat removal capability to allow the operator to take necessary corrective actions.
LCO AND APPLICABILITY	The OPERABILITY of a reactor coolant temperature monitoring channel is specified only for RHR subsystems that are operating in the shutdown cooling mode. RHR shutdown cooling is normally in operation in MODE 3 with reactor pressure below the shutdown cooling interlock pressure during a reactor shutdown. When the reactor coolant temperature is less than 93°C, it is in MODE 4. For operation in MODE 5, reactor coolant temperature is maintained as low as possible for refueling operations.

BASES

LCO AND APPLICABILITY (continued)

The reactor coolant temperature monitoring instrumentation is not required to be OPERABLE when its associated RHR system is not operating in shutdown cooling. In MODE 1 and MODE 3, above the shutdown cooling interlock pressure, RHR shutdown cooling mode is prohibited. In MODE 2 during power ascension, decay heat removal is secured to allow the reactor to heat up and pressurize.

ACTIONS

A.1 and A.2

If one or more reactor coolant temperature monitoring instrument channels are inoperable, the decay heat removal capability of the affected RHR subsystem must be verified to assure continuous shutdown cooling operation. This verification typically involves checking valve alignments, other parameters such as flow and pressure, heat exchanger outlet temperature, and heat exchanger cooling water temperatures in the Reactor Closed Cooling Water system. If RHR shutdown cooling can be verified, continued decay heat removal capability exists although the reactor coolant temperature monitoring instrumentation is inoperable. However, with the reactor coolant temperature instrumentation inoperable, it is prudent to establish alternate methods of reactor coolant temperature monitoring capability. One alternate method is by monitoring of the reactor bottom drain line temperature if the Reactor Water Cleanup system is in operation.

The one hour Completion Time for Action A.2 is reasonable since the rate of change of reactor coolant temperature change is typically small over this time interval even for the loss of decay heat removal capability. The Completion Time is also based on the consideration that the Reactor Cleanup System may not be in operation and adequate time is required to place this system into operation for a reliable temperature indication.

B.1

If it can not be verified that at least one RHR is operating in the shutdown cooling mode, and alternate reactor coolant temperature monitoring capability can not be established, it is necessary to take actions to restore the capability immediately. Local indication of reactor coolant temperature is an acceptable alternate when control room indications can not be established.

BASES

SURVEILLANCE REQUIREMENTS

SR 3.3.8.2.1

Performance of the CHANNEL CHECK ensures that a gross failure of instrumentation has not occurred between Channel Functional Tests. A CHANNEL CHECK is a comparison of the parameter indicated on one channel to the same parameter indicated on other similar channels. It is based on the assumption that instrument channels monitoring the same parameter should read approximately the same value. Significant deviations between the instrument channels could be an indication of excessive instrument drift or other channel faults in one of the channels.

Agreement criteria are determined by the plant staff, based on a combination of the channel instrument uncertainties, including indication and readability. If a channel is outside the match criteria, it may be an indication that the instrument has drifted outside its limit.

The specified high reliability of each temperature monitoring channel provides confidence that a channel failure will be rare. However, a surveillance interval of 7 days is used to provide confidence that gross failures that do not activate an annunciator or alarm will be detected within 7 days. The CHANNEL CHECK supplements less formal, but more frequent, checks of channels during normal operational use of the displays associated with the channels required by the LCO.

SR 3.3.8.2.2

A CHANNEL FUNCTIONAL TEST is performed on each reactor coolant temperature monitoring channel to ensure that the entire channel will perform the intended function. As noted in the Surveillance, the CHANNEL FUNCTIONAL TEST is only required to be performed prior to RHR shutdown operation. The 92 day frequency is based on the simple design and reliability of the temperature monitoring instrumentation.

SR 3.3.8.2.3

CHANNEL CALIBRATION is a complete check of the instrument loop and sensor.

The frequency is based upon the assumption of an 18 month calibration interval in the determination of the magnitude of equipment drift in the setpoint analysis.

REFERENCES

1. DCD Tier 2, Section 19L

B 3.4 REACTOR COOLANT SYSTEM (RCS)

B 3.4.1 Reactor Internal Pumps (RIPs) – Operating

BASES

BACKGROUND

The Reactor Coolant Recirculation System is designed to provide a forced coolant flow through the core to remove heat from the fuel. The forced coolant flow removes more heat from the fuel than would be possible with just natural circulation. The forced flow, therefore, allows operation at significantly higher power than would otherwise be possible. The recirculation system also controls reactivity over a wide span of reactor power by varying the recirculation flow rate to control the void content of the moderator. The Reactor Coolant Recirculation System consists of ten recirculation pumps internal to the reactor vessel. These reactor internal pumps (RIPs) directly provide the driving flow of water through the reactor vessel. Each RIP contains a wet motor, an adjustable speed drive (ASD) to control pump speed, an external heat exchanger to cool the pump motor, and associated instrumentation. The RIP motors, which protrude from the bottom of the reactor vessel into the lower drywell, are part of the reactor coolant pressure boundary. The RIP impellers and shafts are reactor vessel internals.

The recirculated coolant consists of saturated water from the steam separators and dryers that has been subcooled by incoming feedwater. This water passes down the annulus between the reactor vessel wall and the core shroud and becomes the suction flow for the RIPs. This flow enters the ten RIPs at suction inlets located equidistant around the plate (or pump deck) forming the bottom of the annulus area. The total flow then passes through the RIP impeller into the area below the core (lower plenum), gaining sufficient head in the process to drive the required flow upward through the core.

The subcooled water enters the bottom of the fuel channels and contacts the fuel cladding, where heat is transferred to the coolant. As it rises, the coolant begins to boil, creating steam voids within the fuel channel that continue until the coolant exits the core. Because of reduced moderation, the steam voiding introduces negative reactivity that must be compensated for to maintain or to increase reactor power. The recirculation flow control allows operators to increase recirculation flow and sweep some of the voids from the fuel channel, overcoming the negative reactivity void effect. Thus, the reason for having variable recirculation flow is to compensate for reactivity effects of boiling over a wide range of power generation (i.e., 70 to 100% RTP) without having to move control rods and disturb desirable flux patterns.

BASES

BACKGROUND (continued)

Each RIP is manually started from the control room. The ASDs provide regulation of individual RIP speed and, therefore, flow. The flow through each RIP can be manually or automatically controlled.

APPLICABLE SAFETY ANALYSES

The operation of the Reactor Coolant Recirculation System with 100% core flow is an initial condition assumed in the design basis loss of coolant accident (LOCA) (Ref. 1) and abnormal operating transients (Ref. 2). Rated core flow can be achieved with either nine or ten RIPs in operation. During a LOCA and an all RIPs trip event, all operating RIPs are assumed to trip at time zero due to a coincident loss of offsite power. The subsequent core flow coastdown will be immediate and rapid because of the relatively low inertia of the pumps and motors. However, the RIPs are assumed to have sufficient flow coastdown characteristics to maintain fuel thermal margins during abnormal operational transients (Ref. 2), which are analyzed in DCD Tier 2, Chapter 15.

RIPs operating satisfies Criterion 2 of the NRC Policy Statement.

LCO

At least nine RIPs are required to be in operation to ensure that during a postulated LOCA or transient the assumptions of the associated analyses are satisfied.

APPLICABILITY

In MODES 1 and 2, requirements for operation of the Reactor Coolant Recirculation System are necessary since there is considerable energy in the reactor core and the limiting design basis transients and accidents are assumed to occur. In MODES 3, 4, and 5, the consequences of an accident are reduced and the flow and coastdown characteristics of the RIPs are not important.

ACTIONS

A.1

With the requirements of the LCO not met, the unit is required to be brought to a MODE in which the LCO does not apply. To achieve this status, the plant must be brought to MODE 3 within 12 hours. In this condition, the RIPs are not required to be operating because of the reduced severity of DBAs and minimal dependence on the RIPs flow and coastdown characteristics. The allowed Completion Time of 12 hours is reasonable, based on operating experience, to reach MODE 3 from full power conditions in an orderly manner and without challenging plant systems.

BASES

SURVEILLANCE REQUIREMENTS

SR 3.4.1.1

This SR ensures that the number of operating RIPs is consistent with the assumptions of the applicable DBA and transient analyses. This surveillance is required to be performed once every 24 hours. Operating experience with previous BWR designs has demonstrated that a 24 hour frequency for this type of surveillance is adequate.

REFERENCES

1. DCD Tier 2, Section 6.3.3.

2. DCD Tier 2, Chapter 15.

.B 3.4 REACTOR COOLANT SYSTEM (RCS)

B 3.4.2 Safety/Relief Valves (S/RVs)

BASES

BACKGROUND

The American Society of Mechanical Engineers (ASME) Boiler and Pressure Vessel Code (Ref. 1) requires the Reactor Pressure Vessel be protected from overpressure during upset conditions by self actuated safety valves. As part of the nuclear pressure relief system, the size and number of safety/relief valves (S/RVs) are selected such that peak pressure in the nuclear system will not exceed the ASME Code limits for the reactor coolant pressure boundary (RCPB).

The S/RVs are located on the main steam lines between the reactor vessel and the first isolation valve within the drywell. Each S/RV discharges steam through a discharge line to a point below the minimum water level in the suppression pool.

The S/RVs can actuate by either of two modes: the safety mode or the relief mode. In the safety mode (or spring mode of operation), the direct action of the steam pressure in the main steam lines will act against a spring loaded disk that will pop open when the valve inlet pressure exceeds the spring force. In the relief mode (or power actuated mode of operation), a pneumatic piston or cylinder and mechanical linkage assembly are used to open the valve by overcoming the spring force, even with the valve inlet pressure equal to 0 MPaG. The pneumatic operator is arranged so that its malfunction will not prevent the valve disk from lifting if steam inlet pressure reaches the spring lift set pressures. In the relief mode, valves may be opened manually or automatically at the selected preset pressure. Eight of the S/RVs that provide the relief function are part of the Automatic Depressurization System specified in LCO 3.5.1, “ECCS - Operating.” The instrumentation for the ADS function is discussed in LCO 3.3.1.1, “SSLC Sensor Instrumentation.”

APPLICABLE SAFETY ANALYSES

The overpressure protection system must accommodate the most severe pressure transient. Evaluations have determined that the most severe transient is the closure of all main steam isolation valves (MSIVs) followed by reactor scram on high neutron flux (i.e., failure of the direct scram associated with MSIV position) (Ref. 2). For the purpose of the analyses, eleven of the S/RVs are assumed to operate in the safety mode and no credit is taken for the relief mode of operation. The analysis results demonstrate that the design S/RV capacity is capable of maintaining reactor pressure below the ASME Code limit of 110% of vessel design pressure, i.e., 110% x 8.62 MPaG = 9.48 MPaG. Twelve

BASES

APPLICABLE SAFETY ANALYSES (continued)

S/RVs are required to be OPERABLE in the safety mode to meet single failure considerations. This LCO helps to ensure that the acceptance limit of 9.48 MPaG is met during the design basis event.

Reference 3 discusses additional events that are expected to actuate the S/RVs. From an overpressure standpoint, these events are bounded by the MSIV closure with flux scram event described above.

S/RVs satisfy Criterion 3 of the NRC Policy Statement.

LCO

The safety function of twelve S/RVs is required to be OPERABLE in the safety mode. The requirements of this LCO are applicable only to the capability of the S/RVs to mechanically open to relieve excess pressure. An evaluation was performed to establish the parametric relationship between the peak vessel pressure and the number of OPERABLE S/RVs. The results show that with a minimum of eleven S/RVs in the safety mode OPERABLE, the ASME Code limit of 9.48 MPaG is not exceeded. Twelve S/RVs are required to be OPERABLE in the safety mode to meet single failure considerations.

The S/RV setpoints are established to ensure the ASME Code limit on peak reactor pressure is satisfied. The ASME Code specifications require the lowest safety valve be set at or below vessel design pressure, i.e., 8.62 MPaG and the highest safety valve be set so the total accumulated pressure does not exceed 110% of the design pressure for conditions. The overpressurization evaluation in Reference 2 is based on these setpoints, but also includes the additional uncertainties of ± 1% of the nominal setpoint to account for potential setpoint drift to provide an added degree of conservatism.

Operation with fewer valves OPERABLE than specified, or with setpoints outside the ASME limits, could result in a more severe reactor response to a transient than predicted, possibly resulting in the ASME Code limit on reactor pressure being exceeded.

APPLICABILITY

In MODES 1, 2, and 3, the specified number of S/RVs must be OPERABLE since there may be considerable energy in the reactor core and the limiting design basis transients are assumed to occur. The S/RVs may be required to provide pressure relief to discharge energy from the core until such time that the Residual Heat Removal (RHR) System is capable of dissipating the heat.

BASES

APPLICABILITY (continued)

In MODE 4, decay heat is low enough for the RHR System to provide adequate cooling, and reactor pressure is low enough that the overpressure limit cannot be approached by assumed operational transients or accidents. In MODE 5, the reactor vessel head is unbolted or removed and the reactor is at atmospheric pressure. The S/RV function is not needed during these conditions.

ACTIONS

A.1

With the safety function of one required S/RV inoperable, the remaining OPERABLE S/RVs are capable of providing the necessary overpressure protection. However, the overall reliability of the pressure relief system is reduced because additional failures in the remaining OPERABLE S/RVs could result in failure to adequately relieve pressure during a limiting event. For this reason, continued operation is permitted for a limited time only.

The 14 day Completion Time to restore the inoperable required S/RVs to OPERABLE status is based on the relief capability of the remaining S/RVs, the low probability of an event requiring S/RV actuation, and a reasonable time to complete the Required Action.

B.1 and B.2

With less than the minimum number of required S/RVs OPERABLE, a transient may result in the violation of the ASME Code limit on reactor pressure. If the inoperable required S/RV cannot be restored to OPERABLE status within the associated Completion Time of Required Action A.1 or if two or more required S/RVs are inoperable, the plant must be brought to a MODE in which the LCO does not apply. To achieve this status, the plant must be brought to at least MODE 3 within 12 hours and to MODE 4 within 36 hours. The allowed Completion Times are reasonable, based on operating experience, to reach the required plant conditions from full power conditions in an orderly manner and without challenging plant systems.

SURVEILLANCE REQUIREMENTS

SR 3.4.2.1

This Surveillance demonstrates that the required S/RVs will open at the pressures assumed in the safety analysis of Reference 2. The demonstration of the S/RV safety function lift settings must be performed

BASES

SURVEILLANCE REQUIREMENTS (continued)

SR 3.4.2.1 (continued)

during shutdown, since this is a bench test. The lift setting pressure shall correspond to ambient conditions of the valves at nominal operating temperatures and pressures. The S/RV setpoint is ± 3% for OPERABILITY; however, the valves are reset to ± 1% during the Surveillance to allow for drift.

The Frequency is specified in accordance with the Inservice Testing Program.

SR 3.4.2.2

A manual actuation of each required S/RV is performed to verify that, mechanically, the valve is functioning properly and no blockage exists in the valve discharge line. This can be demonstrated by the response of the turbine control valves or bypass valves, by a change in the measured steam flow, or any other method suitable to verify steam flow. Adequate reactor steam dome pressure must be available to perform this test to avoid damaging the valve. Sufficient time is therefore allowed after the required pressure is achieved to perform this test. Adequate pressure at which this test is to be performed is 6.55 MPaG (the pressure recommended by the valve manufacturer). Plant startup is allowed prior to performing this test because valve OPERABILITY and the setpoints for overpressure protection are verified, per ASME requirements, prior to valve installation. Therefore, this SR is modified by a Note that states the Surveillance is not required to be performed until 12 hours after reactor steam dome pressure is ≥ (6.55 MPaG). The 12 hours allowed for manual actuation after the required pressure is reached is sufficient to achieve stable conditions for testing and provides a reasonable time to complete the SR. If the valve fails to actuate due only to the failure of the solenoid but is capable of opening on overpressure, the safety function of the S/RV is considered OPERABLE.

The Frequency is consistent with SR 3.4.2.1 to ensure that the S/RVs are manually actuated following removal for refurbishment or lift setpoint testing.

REFERENCES

1. ASME, Boiler and Pressure Vessel Code, Section III.

2. DCD Tier 2, Section 5.2.2.

3. DCD Tier 2, Chapter 15.

B 3.4 REACTOR COOLANT SYSTEM (RCS)

B 3.4.3 RCS Operational LEAKAGE

BASES

BACKGROUND

The RCS includes systems and components that contain or transport the coolant to or from the reactor core. The pressure containing components of the RCS and the portions of connecting systems out to and including the isolation valves define the reactor coolant pressure boundary (RCPB). The joints of the RCPB components are welded or bolted.

During plant life, the joint and valve interfaces can produce varying amounts of reactor coolant LEAKAGE, through either normal operational wear or mechanical deterioration. Limits on RCS operational LEAKAGE are required to ensure appropriate action is taken before the integrity of the RCPB is impaired. This LCO specifies the types and limits of LEAKAGE.

This protects the RCS pressure boundary described in 10 CFR 50.2, 10 CFR 50.55a(c), and GDC 55 of 10 CFR 50, Appendix A (Refs. 1, 2, and 3).

The safety significance of leaks from the RCPB varies widely depending on the source, rate, and duration. Therefore, detection of LEAKAGE in the primary containment is necessary. Methods for quickly separating the identified LEAKAGE from the unidentified LEAKAGE are necessary to provide the operators quantitative information to permit them to take corrective action should a leak occur detrimental to the safety of the facility or the public.

A limited amount of leakage inside the primary containment is expected from auxiliary systems that cannot be made 100% leaktight. Leakage from these systems should be detected and isolated from the primary containment atmosphere, if possible, so as not to mask RCS operational LEAKAGE detection.

This LCO deals with protection of the RCPB from degradation and the core from inadequate cooling, in addition to preventing the accident analyses radiation release assumptions from being exceeded. The consequences of violating this LCO include the possibility of a loss of coolant accident.

BASES

APPLICABLE SAFETY ANALYSES

The allowable RCS operational LEAKAGE limits are based on the predicted and observed leakage in operating plants. The normally expected background LEAKAGE due to equipment design and the detection capability of the instrumentation for determining system LEAKAGE were also considered. The evidence from experiments suggests, for LEAKAGE even greater than the specified unidentified LEAKAGE limits, the probability is small that the imperfection or crack associated with such LEAKAGE would grow rapidly.

The unidentified LEAKAGE flow limit allows time for corrective action before the RCPB could be significantly compromised. The 19 L/min limit is a small fraction of the calculated flow from a critical crack in the primary system piping (Ref. 6). Crack behavior from experimental programs (Refs. 4 and 5) shows leak rates of hundreds of liters per minute will precede crack instability.

No applicable safety analysis assumes the total LEAKAGE limit. The total LEAKAGE limit considers RCS inventory makeup capability and drywell floor sump capacity.

The low limit on increase in unidentified LEAKAGE assumes a failure mechanism of intergranular stress corrosion cracking (IGSCC) that produces cracks. This flow increase limit is capable of providing an early warning of such deterioration.

RCS operational LEAKAGE satisfies Criterion 2 of the NRC Policy Statement.

LCO

RCS operational LEAKAGE shall be limited to:

a. Pressure Boundary LEAKAGE

No pressure boundary LEAKAGE is allowed, being indicative of material degradation. LEAKAGE of this type is unacceptable as the leak itself could cause further deterioration, resulting in higher LEAKAGE. Violation of this LCO could result in continued degradation of the RCPB. LEAKAGE past seals and gaskets is not pressure boundary LEAKAGE.

b. Unidentified LEAKAGE

Unidentified LEAKAGE of 19 L/min is allowed as a reasonable minimum amount that can be detected within a reasonable time. The drywell air monitoring, drywell sump level monitoring, and drywell air

BASES

LCO (continued)

b. Unidentified LEAKAGE (continued)

cooler condensate flow rate monitoring equipment are used to detect unidentified LEAKAGE. Violation of this LCO could result in continued degradation of the RCPB.

c. Total LEAKAGE

The total LEAKAGE limit is based on a reasonable minimum detectable amount. The limit also accounts for LEAKAGE from known sources (identified LEAKAGE). Violation of this LCO indicates an unexpected amount of LEAKAGE and, therefore, could indicate new or additional degradation in an RCPB component or system.

d. Unidentified LEAKAGE Increase

An unidentified LEAKAGE increase of > 8 L/min within the previous 4 hour period indicates a potential flaw in the RCPB and must be quickly evaluated to determine the source and extent of the LEAKAGE. The increase is measured relative to the steady state value; temporary changes in LEAKAGE rate as a result of transient conditions (e.g., startup) are not considered. As such, the 8 L/min increase limit is only applicable in MODE 1 when operating pressures and temperatures are established. Violation of this LCO could result in continued degradation of the RCPB.

APPLICABILITY

In MODES 1, 2, and 3, the RCS operational LEAKAGE LCO applies because the potential for RCPB LEAKAGE is greatest when the reactor is pressurized.

In MODES 4 and 5, RCS operational LEAKAGE limits are not required since the reactor is not pressurized and stresses in the RCPB materials and potential for LEAKAGE are reduced.

ACTIONS

A.1

With RCS unidentified or total LEAKAGE greater than the limits, actions must be taken to reduce the leak. Because the LEAKAGE limits are conservatively below the LEAKAGE that would constitute a critical crack size, 4 hours is allowed to reduce the LEAKAGE rates before the reactor must be shut down. If an unidentified LEAKAGE has been identified and quantified, it may be reclassified and considered as identified LEAKAGE. However, the total LEAKAGE limit would remain unchanged. The 4 hour Completion Time is needed to properly verify the source before the reactor must be shut down.

BASES

ACTIONS (continued)

B.1 and B.2

An unidentified LEAKAGE increase of > 8 L/min within a 4 hour period is an indication of a potential flaw in the RCPB and must be quickly evaluated. Although the increase does not necessarily violate the absolute unidentified LEAKAGE limit, certain susceptible components must be determined not to be the source of the LEAKAGE increase within the required Completion Time. For an unidentified LEAKAGE increase greater than required limits, an alternative to reducing LEAKAGE increase to within limits (i.e., reducing the LEAKAGE rate such that the current rate is less than the “8 L/min increase in the previous 4 hours” limit; either by isolating the source or other possible methods) is to evaluate service sensitive type 304 and type 316 austenitic stainless steel piping that is subject to high stress or that contains relatively stagnant or intermittent flow fluids and determine it is not the source of the increased LEAKAGE. This type piping is very susceptible to IGSCC.

The 4 hour Completion Time is reasonable to properly reduce the LEAKAGE increase or verify the source before the reactor must be shut down without unduly jeopardizing plant safety.

C.1 and C.2

If any Required Action and associated Completion Time of Condition A or B is not met or if pressure boundary LEAKAGE exists, the plant must be brought to a MODE in which the LCO does not apply. To achieve this status, the plant must be brought to MODE 3 within 12 hours and to MODE 4 within 36 hours. The allowed Completion Times are reasonable, based on operating experience, to reach the required plant conditions from full power conditions in an orderly manner and without challenging plant systems.

SURVEILLANCE REQUIREMENTS

SR 3.4.3.1

The RCS LEAKAGE is monitored by a variety of instruments designed to provide alarms when LEAKAGE is indicated and to quantify the various types of LEAKAGE. Leakage detection instrumentation is discussed in more detail in the Bases for LCO 3.4.5, “RCS Leakage Detection Instrumentation.” Sump level and flow rate are typically monitored to determine actual LEAKAGE rates. However, any method may be used to quantify LEAKAGE within the guidelines of Reference 7. In conjunction with alarms and other administrative controls, an 8 hour Frequency for this Surveillance is appropriate for identifying changes in LEAKAGE and for tracking required trends (Ref. 8).

BASES

REFERENCES

1. 10 CFR 50.2.
2. 10 CFR 50.55a(c).
3. 10 CFR 50, Appendix A, GDC 55.
4. GEAP-5620, April 1968.
5. NUREG-75/067, October 1975.
6. FSAR, Section 5.2.5.5.1.
7. Regulatory Guide 1.45.
8. Generic Letter 88-01, Supplement 1.

B 3.4 REACTOR COOLANT SYSTEM (RCS)

B 3.4.4 RCS Pressure Isolation Valve (PIV) Leakage

BASES

BACKGROUND

RCS PIVs are defined as any two normally closed valves in series within the reactor coolant pressure boundary (RCPB). The function of RCS PIVs is to separate the high pressure RCS from an attached low pressure system. This protects the RCS pressure boundary described in 10 CFR 50.2, 10 CFR 50.55a(c), and GDC 55 of 10 CFR 50, Appendix A (Refs. 1, 2, and 3). PIVs are designed to meet the requirements of Reference 4. During their lives, these valves can produce varying amounts of reactor coolant leakage through either normal operational wear or mechanical deterioration.

The RCS PIV LCO allows RCS high pressure operation when leakage through these valves exists in amounts that do not compromise safety. The PIV leakage limit applies to each individual valve. Leakage through these valves is not included in any allowable LEAKAGE specified in LCO 3.4.3, “RCS Operational LEAKAGE.”

Although this specification provides a limit on allowable PIV leakage rate, its main purpose is to prevent overpressure failure of the low pressure portions of connecting systems. The leakage limit is an indication that the PIVs between the RCS and the connecting systems are degraded or degrading. PIV leakage could lead to overpressure of the low pressure piping or components. Failure consequences could be a loss of coolant accident (LOCA) outside of containment, an unanalyzed accident which could degrade the ability for low pressure injection.

A study (Ref. 5) evaluated various PIV configurations to determine the probability of intersystem LOCAs. This study concluded that periodic leakage testing of the PIVs can substantially reduce intersystem LOCA probability.

PIVs are provided to isolate the RCS from the following typically connected systems:

a. Residual Heat Removal (RHR) System;

b. Standby Liquid Control System;

c. High Pressure Core Flooder System; and

d. Reactor Core Isolation Cooling System.

The PIVs are listed in Reference 6.

BASES

APPLICABLE SAFETY ANALYSES

Reference 5 evaluated various PIV configurations, leakage testing of the valves, and operational changes to determine the effect on the probability of intersystem LOCAs. This study concluded that periodic leakage testing of the PIVs can substantially reduce the probability of an intersystem LOCA.

PIV leakage is not considered in any Design Basis Accident analyses. This Specification provides for monitoring the condition of the RCPB to detect PIV degradation that has the potential to cause a LOCA outside of containment. RCS PIV leakage satisfies Criterion 2 of the NRC Policy Statement.

LCO

RCS PIV leakage is leakage into closed systems connected to the RCS. Isolation valve leakage is usually on the order of drops per minute. Leakage that increases significantly suggests that something is operationally wrong and corrective action must be taken. Violation of this LCO could result in continued degradation of a PIV, which could lead to overpressurization of a low pressure system and the loss of the integrity of a fission product barrier.

The LCO PIV leakage limit is 1.9 L/min per 2.54 cm of valve size with a maximum limit of 19 L/min (Ref. 4).

Reference 4 permits leakage testing at a lower pressure differential than between the specified maximum RCS pressure and the normal pressure of the connected system during RCS operation (the maximum pressure differential). The observed rate may be adjusted to the maximum pressure differential by assuming leakage is directly proportional to the pressure differential to the one-half power.

APPLICABILITY

In MODES 1, 2, and 3, this LCO applies because the PIV leakage potential is greatest when the RCS is pressurized. In MODE 3, valves in the RHR flowpath are not required to meet the requirements of this LCO when in the RHR mode of operation.

In MODES 4 and 5, leakage limits are not provided because the lower reactor coolant pressure results in a reduced potential for leakage and for a LOCA outside the containment. Accordingly, the potential for the consequences of reactor coolant leakage is far lower during these MODES.

BASES

ACTIONS

The ACTIONS are modified by two Notes. Note 1 has been provided to modify the ACTIONS related to RCS PIV flow paths. Section 1.3, Completion Times, specifies once a Condition has been entered, subsequent trains, subsystems, components or variables expressed in the Condition, discovered to be inoperable or not within limits, will not result in separate entry into the Condition. Section 1.3 also specifies Required Actions of the Condition continue to apply for each additional failure, with Completion Times based on initial entry into the Condition. However, the Required Actions for the Condition of RCS PIV leakage limits exceeded provide appropriate compensatory measures for separate affected RCS PIV flow paths. As such, a Note has been provided that allows separate Condition entry for each affected RCS PIV flow path. Note 2 requires an evaluation of affected systems if a PIV is inoperable. The leakage may have affected system OPERABILITY, or isolation of a leaking flow path with an alternate valve may have degraded the ability of the interconnected system to perform its safety function. As a result, the applicable Conditions and Required Actions for systems made inoperable by PIVs must be entered. This ensures appropriate remedial actions are taken, if necessary, for the affected systems.

If leakage from one or more RCS PIVs is not within limit, the flow path must be isolated by at least one closed manual, deactivated, automatic, or check valve within 4 hours. Required Action A.1 and Required Action A.2 are modified by a Note stating that the valves used for isolation must meet the same leakage requirements as the PIVs and must be on the RCPB or the high pressure portion of the system.

Four hours provides time to reduce leakage in excess of the allowable limit and to isolate the flow path if leakage cannot be reduced while corrective actions to reseat the leaking PIVs are taken. The 4 hours allows time for these actions and restricts the time of operation with leaking valves.

Required Action A.2 specifies that the double isolation barrier of two valves be restored by closing another valve qualified for isolation or restoring one leaking PIV. The 72 hour Completion Time after exceeding the limit considers the time required to complete the Required Action, the low probability of a second valve failing during this time period, and the low probability of a pressure boundary rupture of the low pressure ECCS piping when overpressurized to reactor pressure (Ref. 7).

BASES

ACTIONS (continued)

B.1 and B.2

If leakage cannot be reduced or the system isolated, the plant must be brought to a MODE in which the LCO does not apply. To achieve this status, the plant must be brought to MODE 3 within 12 hours and to MODE 4 within 36 hours. This action may reduce the leakage and also reduces the potential for a LOCA outside the containment. The Completion Times are reasonable, based on operating experience, to achieve the required plant conditions from full power conditions in an orderly manner and without challenging plant systems.

SURVEILLANCE REQUIREMENTS

SR 3.4.4.1

Performance of leakage testing on each RCS PIV is required to verify that leakage is below the specified limit and to identify each leaking valve. The leakage limit of 1.9 L/min per 2.54 cm of valve diameter up to 19 L/min maximum applies to each valve. Leakage testing requires a stable pressure condition. For the two PIVs in series, the leakage requirement applies to each valve individually and not to the combined leakage across both valves. If the PIVs are not individually leakage tested, one valve may have failed completely and not be detected if the other valve in series meets the leakage requirement. In this situation, the protection provided by redundant valves would be lost.

The 18 month Frequency required by the Inservice Testing Program is within the Ref. 4, Frequency requirement and is based on the need to perform this Surveillance under the conditions that apply during an outage and the potential for an unplanned transient if the Surveillance were performed with the reactor at power.

Therefore, this SR is modified by a Note that states the leakage Surveillance is not required to be performed in MODE 3. Entry into MODE 3 is permitted for leakage testing at high differential pressures with stable conditions not possible in the lower MODES.

REFERENCES

1. 10 CFR 50.2.

2. 10 CFR 50.55a(c).

3. 10 CFR 50, Appendix A, GDC 55.

4. ASME/ANSI OMa-1988 Addenda to ASME/ANSI OM-1987.

BASES

REFERENCES (continued)

5. NUREG-0677, May 1980.

6. DCD Tier 2, Table 3.9-9.

7. NEDC-31339, November 1986.

B 3.4 REACTOR COOLANT SYSTEM (RCS)

B 3.4.5 RCS Leakage Detection Instrumentation

BASES

BACKGROUND

GDC 30 of 10 CFR 50, Appendix A (Ref. 1), requires means for detecting and, to the extent practical, identifying the location of the source of RCS LEAKAGE. Regulatory Guide 1.45 (Ref. 2) describes acceptable methods for selecting leakage detection systems.

Limits on LEAKAGE from the reactor coolant pressure boundary (RCPB) are required so that appropriate action can be taken before the integrity of the RCPB is impaired (Ref. 2). Leakage detection systems for the RCS are provided to alert the operators when leakage rates above normal background levels are detected and also to supply quantitative measurement of rates. The Bases for LCO 3.4.3, “RCS Operational LEAKAGE,” discuss the limits on RCS LEAKAGE rates.

Systems for separating the LEAKAGE of an identified source from an unidentified source are necessary to provide prompt and quantitative information to the operators to permit them to take immediate corrective action.

LEAKAGE from the RCPB inside the drywell is detected by at least one of two or three independently monitored variables, such as sump level changes and drywell gaseous and particulate radioactivity levels. The primary means of quantifying LEAKAGE in the drywell is the drywell floor drain sump monitoring system.

The drywell floor drain sump monitoring system monitors the LEAKAGE collected in the floor drain sump. This unidentified LEAKAGE consists of LEAKAGE from valve flanges or packings, floor drains, the Reactor Building Cooling Water System, and drywell air cooling unit condensate drains, and any LEAKAGE not collected in the drywell equipment drain sump. The drywell floor drain sump has level transmitters that supply fill-rate indications in the main control room.

The floor drain sump level control instrumentation will start and stop the sump pumps when required. Instruments will provide information on sump level as a function of time to a computer to track sump level rate of change. If a preset limit on level rate of change is exceeded an alarm sounds in the control room indicating LEAKAGE rate into the sump in excess of a preset limit. A flow indicator in the discharge line of the drywell floor drain sump provides flow indication in the control room.

BASES

BACKGROUND (continued)

The drywell fission products monitoring systems continuously monitors the drywell atmosphere for airborne particulate and gaseous radioactivity. A sudden increase of radioactivity, which may be attributed to RCPB steam or reactor water LEAKAGE, is annunciated in the control room. The drywell fission products monitoring system is sensitive enough to indicate increased radioactivity levels above background levels.

Condensate from the drywell coolers is routed to the drywell floor drain sump and is monitored by a flow transmitter that provides indication and alarms in the control room. This drywell air cooler condensate flow rate monitoring system serves as an added indicator of RCS unidentified LEAKAGE.

APPLICABLE SAFETY ANALYSES

A threat of significant compromise to the RCPB exists if the barrier contains a crack that is large enough to propagate rapidly. LEAKAGE rate limits are set low enough to detect the LEAKAGE emitted from a single crack in the RCPB (Refs. 4 and 5). Each of the leakage detection systems inside the drywell is designed with the capability of detecting LEAKAGE less than the established LEAKAGE rate limits and providing appropriate alarm of excess LEAKAGE in the control room.

A control room alarm allows the operators to evaluate the significance of the indicated LEAKAGE and, if necessary, shut down the reactor for further investigation and corrective action. The allowed LEAKAGE rates are well below the rates predicted for critical crack sizes (Ref. 3). Therefore, these actions provide adequate response before a significant break in the RCPB can occur.

RCS leakage detection instrumentation satisfies Criterion 1 of the NRC Policy Statement.

LCO

The drywell floor drain sump monitoring system is required to quantify the unidentified LEAKAGE from the RCS. Thus, for the system to be considered OPERABLE, either the flow monitoring or the sump level monitoring portion of the system must be OPERABLE. The other monitoring systems provide early alarms to the operators so closer examination of other detection systems will be made to determine the extent of any corrective action that may be required. With the leakage detection systems inoperable, monitoring for LEAKAGE in the RCPB is degraded.

BASES

APPLICABILITY

In MODES 1, 2, and 3, leakage detection systems are required to be OPERABLE to support LCO 3.4.3. This Applicability is consistent with that for LCO 3.4.3.

ACTIONS

A.1

With the drywell floor drain sump monitoring system inoperable, no other form of sampling can provide the equivalent information to quantify leakage. However, the drywell fission products monitor and/or the drywell air cooler condensate flow rate monitor will provide indications of changes in leakage.

With the drywell floor drain sump monitoring system inoperable, but with RCS unidentified and total LEAKAGE being determined every 8 hours (SR 3.4.3.1), operation may continue for 30 days. The 30 day Completion Time of Required Action A.1 is acceptable, based on operating experience, considering the multiple forms of leakage detection that are still available. Required Action A.1 is modified by a Note that states that the provisions of LCO 3.0.4 are not applicable. As a result, a MODE change is allowed when the drywell floor drain sump monitoring system is inoperable. This allowance is provided because other instrumentation is available to monitor RCS leakage.

B.1 and B.2

With the airborne particulate channel of the drywell fission products monitoring channels inoperable, grab samples of the containment atmosphere shall be taken and analyzed to provide periodic leakage information. Provided a sample is obtained and analyzed every 12 hours, the plant may be operated for up to 30 days to allow restoration of the required monitor channel. Provided a sample is obtained and analyzed every 12 hours, the plant may continue operation since at least one other form of drywell leakage detection (i.e., gaseous radioactivity channel of the fission products monitor and/or air cooler condensate flow rate monitor) is available.

The 12 hour interval provides periodic information that is adequate to detect LEAKAGE. The 30 day Completion Time for restoration recognizes that at least one other form of leakage detection is available.

BASES

ACTIONS (continued)

B.1 and B.2 (continued)

The Required Actions are modified by a Note that states that the provisions of LCO 3.0.4 are not applicable. As a result, a MODE change is allowed when the airborne particulate channel of the drywell fission products monitoring system is inoperable. This allowance is provided because other instrumentation is available to monitor RCS leakage.

C.1 and C.2

With the drywell gaseous radioactivity channel of the drywell fission products monitoring system and the drywell air cooler condensate flow monitoring system inoperable, the drywell floor drain and airborne particulate channel of the drywell fission products monitoring systems provide information on LEAKAGE. The 30-day Completion Time for restoration of either the drywell atmospheric gaseous or drywell air cooler condensate flow rate monitoring system recognizes that two other forms of leak detection are available.

The Required Actions are modified by a Note that states that the provisions of LCO 3.0.4 are not applicable. As a result, a MODE change is allowed when the drywell atmospheric gaseous and drywell air cooler condensate flow rate monitoring systems are inoperable. This allowance is provided because other instrumentation is available to monitor RCS leakage.

D.1 and D.2

If any Required Action of Condition A, B, or C cannot be met within the associated Completion Time, the plant must be brought to a MODE in which the LCO does not apply. To achieve this status, the plant must be brought to at least MODE 3 within 12 hours and to MODE 4 within 36 hours. The allowed Completion Times are reasonable, based on operating experience, to reach the required plant conditions in an orderly manner and without challenging plant systems.

E.1

With all required monitors inoperable, no required automatic means of monitoring LEAKAGE are available, and immediate plant shutdown in accordance with LCO 3.0.3 is required.

BASES

SURVEILLANCE REQUIREMENTS

SR 3.4.5.1

This SR requires the performance of a CHANNEL CHECK of the required drywell atmospheric monitoring system. The check gives reasonable confidence that the channel is operating properly. The Frequency of 12 hours is based on instrument reliability and is reasonable for detecting off normal conditions.

SR 3.4.5.2

This SR requires the performance of a CHANNEL FUNCTIONAL TEST of the required RCS leakage detection instrumentation. The test ensures that the monitors can perform their function in the desired manner. The test also verifies the alarm setpoint and relative accuracy of the instrument string. The Frequency of 31 days considers instrument reliability, and operating experience has shown it proper for detecting degradation.

SR 3.4.5.3

This SR requires the performance of a CHANNEL CALIBRATION of the required RCS leakage detection instrumentation channels. The calibration verifies the accuracy of the instrument string, including the instruments located inside containment. The Frequency of 18 months is a typical refueling cycle and considers channel reliability. Operating experience has proven this Frequency is acceptable.

REFERENCES

1. 10 CFR 50, Appendix A, GDC 30.
2. Regulatory Guide 1.45, May 1973.
3. DCD Tier 2, Section 5.2.5.5.3.
4. GEAP-5620, April 1968.
5. NUREG-75/067, October 1975.

B 3.4 REACTOR COOLANT SYSTEM (RCS)

B 3.4.6 RCS Specific Activity

BASES

BACKGROUND

During circulation, the reactor coolant acquires radioactive materials due to release of fission products from fuel leaks into the coolant and activation of corrosion products in the reactor coolant. These radioactive materials in the coolant can plate out in the RCS, and, at times, an accumulation will break away to spike the normal level of radioactivity. The release of coolant during a Design Basis Accident (DBA) could send radioactive materials into the environment.

Limits on the maximum allowable level of radioactivity in the reactor coolant are established to ensure, in the event of a release of any radioactive material to the environment during a DBA, radiation doses are maintained within the limits of 10 CFR 100 (Ref. 1).

This LCO contains both iodine and gross specific activity limits. The iodine isotopic activities per gram of reactor coolant are expressed in terms of a DOSE EQUIVALENT I-131. Total specific reactor coolant activity is limited on the basis of the weighted average beta and gamma energy levels in the coolant. The allowable levels are intended to limit the 2 hour radiation dose to an individual at the site boundary to a small fraction of the 10 CFR 100 limit.

APPLICABLE SAFETY ANALYSES

Analytical methods and assumptions involving radioactive material in the primary coolant are presented in Reference 2. The specific activity in the reactor coolant (the source term) is an initial condition for evaluation of the consequences of an accident due to a main steam line break (MSLB) outside containment. No fuel damage is postulated in the MSLB accident, and the release of radioactive material to the environment is assumed to end when the main steam isolation valves (MSIVs) close completely.

This MSLB release forms the basis for determining offsite doses (Ref. 2). The limits on the specific activity of the primary coolant ensure that for a MSLB with an assumed pre-accident iodine spike corresponding to the maximum iodine concentration, the calculated doses will not exceed the guideline values of 10 CFR 100 and for a MSLB with an assumed iodine concentration corresponding to the equilibrium value for continued full power operation, the 2-hour thyroid and whole body doses at the site boundary will not exceed 10% of the dose guidelines of 10 CFR 100.

BASES

APPLICABLE SAFETY ANALYSES (continued)

The limits on specific activity are values from a parametric evaluation of typical site locations. These limits are conservative because the evaluation considered more restrictive parameters than for a specific site, such as the location of the site boundary and the meteorological conditions of the site.

RCS specific activity satisfies Criterion 2 of the NRC Policy Statement.

LCO

The specific iodine activity is limited to ≤ 7400 Bq/g DOSE EQUIVALENT I-131, and the gross specific activity is limited to ($3.7 \times 10^6/\bar{E}$) Bq/g. These limits ensure the source term assumed in the safety analysis for the MSLB is not exceeded, so any release of radioactivity to the environment during an MSLB is less than a small fraction of the 10 CFR 100 limits.

APPLICABILITY

In MODE 1, and MODES 2 and 3 with any main steam line not isolated, limits on the primary coolant radioactivity are applicable since there is an escape path for release of radioactive material from the primary coolant to the environment in the event of an MSLB outside of primary containment.

In MODES 2 and 3 with the MSIVs closed, such limits do not apply since an escape path does not exist. In MODES 4 and 5, no limits are required since the reactor is not pressurized and the potential for leakage is reduced.

ACTIONS

A Note to the ACTIONS excludes the MODE change restriction of LCO 3.0.4. This exception allows entry into the applicable MODE(S) while relying on the ACTIONS even though the ACTIONS may eventually require plant shutdown. This exception is acceptable due to the significant conservatism incorporated into the specific activity limit, the low probability of an event which is limiting due to exceeding this limit, and the ability to restore transient specific activity excursions while the plant remains at, or proceeds to power operation.

A.1 and A.2

When the reactor coolant specific activity exceeds the LCO DOSE EQUIVALENT I-131 limit, but is ≤ 148,000 Bq/g, samples must be analyzed for DOSE EQUIVALENT I-131 at least once every 4 hours. In addition, the specific activity must be restored to the LCO limit within 48 hours. The Completion Time of once every 4 hours is based on the time needed to take and analyze a sample. The 48 hour Completion Time to restore the activity level provides a reasonable time for temporary coolant activity increases (iodine spikes or crud bursts) to be cleaned up with the normal processing systems.

BASES

ACTIONS (continued)

B.1, B.2.1, B.2.2.1, and B.2.2.2

If the DOSE EQUIVALENT I-131 cannot be restored to ≤ 7400 Bq/g within 48 hours, or if at any time it is > 148,000 Bq/g, it must be determined at least every 4 hours and all the main steam lines must be isolated within 12 hours. Isolating the main steam lines precludes the possibility of releasing radioactive material to the environment in an amount that is more than a small fraction of the requirements of 10 CFR 100 during a postulated MSLB accident.

Alternately, the plant can be brought to MODE 3 within 12 hours and to MODE 4 within 36 hours. This option is provided for those instances when isolation of main steam lines is not desired (e.g., due to the decay heat loads). In MODE 4, the requirements of the LCO are no longer applicable.

The Completion Time of once every 4 hours is the time needed to take and analyze a sample. The 12 hour Completion Time is reasonable, based on operating experience, to isolate the main steam lines in an orderly manner and without challenging plant systems. Also, the allowed Completion Times for Required Actions B.2.2.1 and B.2.2.2 for bringing the plant to MODES 3 and 4 are reasonable, based on operating experience, to reach the required plant conditions from full power conditions in an orderly manner and without challenging plant systems.

C.1, C.2.1, and C.2.2

When the reactor coolant specific activity is > $(3.7 \times 10^6/\bar{E})$ Bq/g, all main steam lines must be isolated within 12 hours. Closing the MSIVs eliminates the potential radioactivity release path to the environment during an MSLB event.

Alternately, the plant can be brought to MODE 3 within 12 hours and to MODE 4 within 36 hours. This option is provided for those instances when isolation of main steam lines is not desired (e.g., due to the decay heat loads). In MODE 4, the requirements of the LCO are no longer applicable.

The 12 hour Completion Time is reasonable, based on operating experience, to isolate the main steam lines without challenging plant systems. Also, the allowed Completion Times for Required Actions C.2.1 and C.2.2 are reasonable, based on operating experience, to reach the required plant conditions from full power conditions in an orderly manner and without challenging plant systems.

BASES

SURVEILLANCE REQUIREMENTS

SR 3.4.6.1

This SR requires performing a gamma isotopic analysis as a measure of the gross specific activity of the reactor coolant at least once per 7 days. While basically a quantitative measure of radionuclides with half lives longer than 15 minutes, excluding iodines, this measurement is the sum of the degassed gamma activities and the gaseous gamma activities in the sample taken. This Surveillance provides an indication of any increase in gross specific activity.

Trending the results of this Surveillance allows proper remedial action to be taken before reaching the LCO limit under normal operating conditions. The 7 day Frequency considers the unlikelihood of a gross fuel failure during this short time frame.

SR 3.4.6.2

This Surveillance is performed to ensure iodine remains within limit during normal operation. The 31 day Frequency is adequate to trend changes in the iodine activity level considering gross specific activity is monitored every 7 days.

This SR is modified by a Note that requires this Surveillance to be performed only in MODE 1 because the level of fission products generated in other MODES is much less.

SR 3.4.6.3

A radiochemical analysis for $\bar{E}$ determination is required every 184 days with the plant operating in MODE 1 with equilibrium conditions. The $\bar{E}$ determination directly relates to the LCO and is required to verify plant operation within the gross specific activity LCO limit. The analysis for $\bar{E}$ is a measurement of the average energies per disintegration for isotopes with half lives longer than 15 minutes, excluding iodines. Operating experience has shown that $\bar{E}$ does not change rapidly and the Frequency of 184 days recognizes this.

This SR has been modified by a Note that states that sampling is required to be performed within 31 days after a minimum of 2 effective full power days and 20 days of MODE 1 operation have elapsed since the reactor was last subcritical for at least 48 hours. This ensures the radioactive materials are at equilibrium so the analysis for $\bar{E}$ is representative and not skewed by a crud burst or other similar abnormal event.

BASES

REFERENCES

1. 10 CFR 100.11, 1973.

2. DCD Tier 2, Chapter 15.

B 3.4 REACTOR COOLANT SYSTEM (RCS)

B 3.4.7 Residual Heat Removal (RHR) Shutdown Cooling System – Hot Shutdown

BASES

BACKGROUND	Irradiated fuel in the shutdown reactor core generates heat during the decay of fission products and increases the temperature of the reactor coolant. This decay heat must be removed to reduce the temperature of the reactor coolant to ≤ 93°C. This decay heat removal is in preparation for performing refueling or maintenance operations, or for keeping the reactor in the Hot Shutdown condition. The three redundant, manually controlled shutdown cooling subsystems of the RHR System provide decay heat removal. Each loop consists of a motor driven pump, a heat exchanger, and associated piping and valves. Each loop has its own dedicated suction from the RPV. Each pump discharges the reactor coolant, after circulation through the respective heat exchanger, to the reactor via separate feedwater line “A” for RHR loop “A” and via the RHR low pressure flooder spargers for loops “B” and “C”. The RHR heat exchangers transfer heat to the Reactor Building Cooling Water System (LCO 3.7.1).
APPLICABLE SAFETY ANALYSES	Decay heat removal by the RHR System in the shutdown cooling mode is not required for mitigation of any event or accident evaluated in the safety analyses. Decay heat removal is, however, an important safety function that must be accomplished or core damage could result. Although the RHR Shutdown Cooling System does not meet a specific criterion of the NRC Policy Statement, it was identified in the NRC Policy Statement as a significant contributor to risk reduction. Therefore, the RHR Shutdown Cooling System is retained as a Technical Specification.
LCO	Three RHR shutdown cooling subsystems are required to be OPERABLE, and, when less than 5 reactor internal pumps (RIPs) are in operation (similar to operation of a single recirculation loop in the BWR/6), one shutdown cooling subsystem must be in operation. An OPERABLE RHR shutdown cooling subsystem consists of one OPERABLE RHR pump, a heat exchanger, and the associated piping and valves. Each shutdown cooling subsystem is considered OPERABLE if it can be manually aligned (remote or local) in the shutdown cooling mode for removal of decay heat. In MODE 3, two RHR shutdown cooling subsystem can provide the required cooling (Ref. 1), but three subsystems are required to be OPERABLE to provide redundancy.

BASES

LCO (continued)

Operation of one subsystem can maintain or reduce the reactor coolant temperature as required. However, to ensure adequate core flow to allow for accurate average reactor coolant temperature monitoring, nearly continuous operation is required.

Note 1 permits all RHR shutdown cooling subsystems and reactor internal pumps to be shut down for a period of 2 hours in an 8 hour period.
Note 2 allows one RHR shutdown cooling subsystem to be inoperable for performance of surveillance tests. These tests may be on the affected RHR System or on some other plant system or component that necessitates placing the RHR System in an inoperable status during the performance. This is permitted because the core heat generation can be low enough and the heatup rate slow enough to allow some changes to the RHR subsystems or other operations requiring RHR flow interruption and loss of redundancy.

APPLICABILITY

In MODES 1 and 2, and in MODE 3 with reactor steam dome pressure above the RHR cut in permissive pressure, this LCO is not applicable. Operation of the RHR System in the shutdown cooling mode is not allowed above this pressure because the RCS pressure may exceed the design pressure of the shutdown cooling piping. Decay heat removal at reactor pressures above the RHR cut in permissive pressure is typically accomplished by condensing the steam in the main condenser. Additionally, in MODE 2 below this pressure, the OPERABILITY requirements for the Emergency Core Cooling Systems (ECCS) (LCO 3.5.1, “ECCS – Operating”) do not allow placing the low pressure RHR shutdown cooling subsystem into operation.

In MODE 3 with reactor steam dome pressure below the RHR cut in permissive pressure (i.e., the actual pressure at which the interlock resets) the RHR System may be operated in the shutdown cooling mode to remove decay heat to reduce or maintain coolant temperature.

The requirements for decay heat removal in MODES 4 and 5 are discussed in LCO 3.4.8, “Residual Heat Removal (RHR) Shutdown Cooling System – Cold Shutdown”; LCO 3.9.7, “Residual Heat Removal (RHR) – High Water Level”; and LCO 3.9.8, “Residual Heat Removal (RHR) – Low Water Level.”

BASES

ACTIONS

A.1, A.2, and A.3

With one or more required RHR shutdown cooling subsystems inoperable for decay heat removal, the inoperable required subsystem(s) must be restored to OPERABLE status without delay. In this condition, the remaining OPERABLE required subsystem(s) can provide the necessary decay heat removal. The overall reliability is reduced, however, because a single failure in the OPERABLE required subsystem(s) could result in reduced RHR shutdown cooling capability.

With one of the three required RHR shutdown cooling subsystems inoperable, the remaining required subsystems are capable of providing the required decay heat removal. However, the overall reliability is reduced. Therefore an alternate required method of decay heat removal must be provided. With more than one required RHR shutdown cooling subsystems inoperable, an alternate method of decay heat removal must be provided in addition to that provided for the initial RHR shutdown cooling subsystem inoperability. This re-establishes backup decay heat removal capabilities, similar to the requirements of the LCO. The 1 hour Completion Time is based on the decay heat removal function and the probability of a loss of the available decay heat removal capabilities.

The required cooling capacity of the alternate method should be ensured by verifying (by calculation or demonstration) its capability to maintain or reduce temperature. Decay heat removal by ambient losses can be considered as contributing to the alternate method capability. Alternate methods that can be used include (but are not limited to) the Reactor Water Cleanup System.

However, due to the potentially reduced reliability of the alternate methods of decay heat removal, it is also required to reduce the reactor coolant temperature to the point where MODE 4 is entered. With one or more RHR decay heat removal subsystems inoperable, the time to achieve MODE 4 will depend on several parameters and the capability of the remaining operable RHR decay heat removal subsystems and alternate decay heat removal methods. The parameters that can affect the time to reach MODE 4 are ultimate heat sink temperature and the reactor decay heat, both of which are expected to vary at various times during plant operation. For these reasons, it is not appropriate to specify a certain completion time for achieving MODE 4. Rather, Required Action A.2 specifies initiation of necessary actions to achieve MODE 4 with a Completion Time of “Immediately”.

BASES

ACTIONS (continued)

B.1, B.2, and B.3

With no RHR shutdown cooling subsystem and less than 5 RIPs in operation, except as is permitted by LCO Note, reactor coolant circulation by the RHR shutdown cooling subsystem or enough RIPs so that at least 5 are operating must be restored without delay.

Until RHR, or at least 5 RIPs, operation is re-established, an alternate method of reactor coolant circulation must be placed into service. This will provide the necessary circulation for monitoring coolant temperature and pressure. The 1 hour Completion Time is based on the coolant circulation function and is modified such that the 1 hour is applicable separately for each occurrence involving a loss of coolant circulation. Furthermore, verification of the functioning of the alternate method must be reconfirmed every 12 hours thereafter. This will provide assurance of continued temperature monitoring capability.

During the period when the reactor coolant is being circulated by an alternate method (other than by the required RHR Shutdown Cooling System), the reactor coolant temperature and pressure must be periodically monitored to ensure proper function of the alternate method. The once per hour Completion Time is deemed appropriate.

SURVEILLANCE REQUIREMENTS

SR 3.4.7.1

This Surveillance verifies that one RHR shutdown cooling subsystem or at least 5 RIPs are in operation and circulating reactor coolant. The required flow rate is determined by the flow rate necessary to provide sufficient decay heat removal capability. The Frequency of 12 hours is sufficient in view of other visual and audible indications available to the operator for monitoring the RHR subsystem in the control room.

This Surveillance is modified by a Note allowing sufficient time to align the RHR System for shutdown cooling operation after clearing the pressure interlock that isolates the system, or for placing at least 5 RIPs in operation. The Note takes exception to the requirements of the Surveillance being met (i.e., forced coolant circulation is not required for this initial 2 hour period), which also allows entry into the Applicability of this Specification in accordance with SR 3.0.4 since the Surveillance will not be “not met” at the time of entry into the Applicability.

REFERENCES

1. DCD Tier 2, Section 5.4.7.

B 3.4 REACTOR COOLANT SYSTEM (RCS)

B 3.4.8 Residual Heat Removal (RHR) Shutdown Cooling System – Cold Shutdown

BASES

BACKGROUND

Irradiated fuel in the shutdown reactor core generates heat during the decay of fission products and increases the temperature of the reactor coolant. This decay heat must be removed to maintain the temperature of the reactor coolant at ≤ 93°C. This decay heat removal is in preparation for performing refueling or maintenance operations, or for keeping the reactor in the Cold Shutdown condition.

The three redundant, manually controlled shutdown cooling subsystems of the RHR System provide decay heat removal. Each loop consists of a motor driven pump, a heat exchanger, and associated piping and valves. Each loop has its own dedicated suction from the RPV. Each pump discharges the reactor coolant, after circulation through the respective heat exchanger, to the reactor via feedwater line “A” for RHR loop “A” and via the RHR low pressure flooder spargers for loops “B” and “C”. The RHR heat exchangers transfer heat to the Reactor Building Cooling Water System (LCO 3.7.1).

APPLICABLE SAFETY ANALYSES

Decay heat removal by the RHR System in the shutdown cooling mode is not required for mitigation of any event or accident evaluated in the safety analyses. Decay heat removal is, however, an important safety function that must be accomplished or core damage could result. Although the RHR shutdown cooling subsystem does not meet a specific criterion of the NRC Policy Statement, it was identified in the Policy Statement as a significant contributor to risk reduction. Therefore, the RHR shutdown cooling subsystem is covered by a Technical Specification.

LCO

Three RHR shutdown cooling subsystems are required to be OPERABLE, and, when less than 5 reactor internal pumps (RIPs) are in operation (similar to operation of a single recirculation loop in the BWR/6), one shutdown cooling subsystem must be in operation. An OPERABLE RHR shutdown cooling subsystem consists of one OPERABLE RHR pump, a heat exchanger, and the associated piping and valves.

Each shutdown cooling subsystem is considered OPERABLE if it can be manually aligned (remote or local) in the shutdown cooling mode for removal of decay heat. In MODE 4, two RHR shutdown cooling subsystems can provide the required cooling (Ref. 1), but three

BASES

LCO (continued)

subsystems are required to be OPERABLE to provide redundancy. To ensure adequate core flow to allow for accurate average reactor coolant temperature monitoring, nearly continuous operation is required.

Note 1 permits all RHR shutdown cooling subsystems and RIPs to be shut down for a period of 2 hours in an 8 hour period. Note 2 allows one RHR shutdown cooling subsystem to be inoperable for the performance of surveillance tests. These tests may be on the affected RHR System or on some other plant system or component that necessitates placing the RHR System in an inoperable status during the performance. This is permitted because the core heat generation can be low enough and the heatup rate slow enough to allow some changes to the RHR subsystems or other operations requiring RHR flow interruption and loss of redundancy.

Note 3 allows one RHR shutdown cooling subsystem to be inoperable after 30 hours from initial entry into MODE 4 from MODE 3. After 30 hours into MODE 4 from MODE 3, decay heat has dropped sufficiently (assuming maximum decay heat at the end of a fuel cycle) such that only one RHR shutdown cooling subsystem can provide the required cooling to maintain the reactor in MODE 4 condition, and hence only two subsystems are required to be OPERABLE to provide redundant decay heat removal capability.

APPLICABILITY

In MODES 1 and 2, and in MODE 3 with reactor steam dome pressure above the RHR cut in permissive pressure, this LCO is not applicable. Operation of the RHR System in the shutdown cooling mode is not allowed above this pressure because the RCS pressure may exceed the design pressure of the shutdown cooling piping. Decay heat removal at reactor pressures above the RHR cut in permissive pressure is typically accomplished by condensing the steam in the main condenser. Additionally, in MODE 2 below this pressure, the OPERABILITY requirements for the Emergency Core Cooling Systems (ECCS) (LCO 3.5.1, “ECCS – Operating”) do not allow placing the low pressure RHR shutdown cooling subsystem into operation.

In MODE 4, the RHR System may be operated in the shutdown cooling mode to remove decay heat to reduce or maintain coolant temperature.

The requirements for decay heat removal in MODE 3 below the cut in permissive pressure and in MODE 5 are discussed in LCO 3.4.7, “Residual Heat Removal (RHR) Shutdown Cooling System – Hot Shutdown”; LCO 3.9.7, “Residual Heat Removal (RHR) – High Water Level”; and LCO 3.9.8, “Residual Heat Removal (RHR) – Low Water Level.”

BASES

ACTIONS

A.1

With one of the three RHR shutdown cooling subsystems inoperable, the remaining required subsystems are capable of providing the required decay heat removal. However, the overall reliability is reduced. Therefore an alternate method of decay heat removal must be provided. With two or more RHR shutdown cooling subsystems inoperable an alternate method of decay heat removal must be provided for each required inoperable RHR shutdown cooling subsystem. This re-establishes backup decay heat removal capabilities, similar to the requirements of the LCO. The 1 hour Completion Time is based on the decay heat removal function and the probability of a loss of the available decay heat removal capabilities. Furthermore, verification of the functional availability of these alternate method(s) must be reconfirmed every 24 hours thereafter. This will provide assurance of continued heat removal capability.

The required cooling capacity of the alternate method should be ensured by verifying (by calculation or demonstration) its capability to maintain or reduce temperature. Decay heat removal by ambient losses can be considered as contributing to the alternate method capability. Alternate methods that can be used include (but are not limited to) the Reactor Water Cleanup System.

B.1 and B.2

With no RHR shutdown cooling subsystem and less than 5 RIPs in operation, except as is permitted by LCO Note, reactor coolant circulation by the RHR shutdown cooling subsystem or enough RIPs so that at least 5 are operating must be restored without delay.

Until RHR operation is re-established, an alternate method of reactor coolant circulation must be placed into service. This will provide the necessary circulation for monitoring coolant temperature and pressure. The 1 hour Completion Time is based on the coolant circulation function and is modified such that the 1 hour is applicable separately for each occurrence involving a loss of coolant circulation. Furthermore, verification of the functioning of the alternate method must be reconfirmed every 12 hours thereafter. This will provide assurance of continued temperature monitoring capability.

BASES

ACTIONS (continued)

B.1 and B.2 (continued)

During the period when the reactor coolant is being circulated by an alternate method (other than by the required RHR shutdown cooling system), the reactor coolant temperature must be periodically monitored to ensure proper function of the alternate method. The once per hour Completion Time is deemed appropriate.

SURVEILLANCE REQUIREMENTS

SR 3.4.8.1

This Surveillance verifies that one RHR subsystem or at least 5 RIPs are in operation and circulating reactor coolant. The required flow rate is determined by the flow rate necessary to provide sufficient decay heat removal capability. The Frequency of 12 hours is sufficient in view of other visual and audible indications available to the operator for monitoring the RHR subsystem in the control room.

REFERENCES

1. DCD Tier 2, Section 5.4.7.

B 3.4 REACTOR COOLANT SYSTEM (RCS)

B 3.4.9 RCS Pressure and Temperature (P/T) Limits

BASES

BACKGROUND

All components of the RCS are designed to withstand effects of cyclic loads due to system pressure and temperature changes. These loads are introduced by startup (heatup) and shutdown (cooldown) operations, power transients, and reactor trips. This LCO limits the pressure and temperature changes during RCS heatup and cooldown, within the design assumptions and the stress limits for cyclic operation.

The PTLR contains P/T limit curves for heatup, cooldown, and inservice leak and hydrostatic testing, and data for the maximum rate of change of reactor coolant temperature. The heatup curve provides limits for both heatup and criticality.

Each P/T limit curve defines an acceptable region for normal operation. The usual use of the curves is operational guidance during heatup or cooldown maneuvering, when pressure and temperature indications are monitored and compared to the applicable curve to determine that operation is within the allowable region.

The LCO establishes operating limits that provide a margin to brittle failure of the reactor vessel and piping of the reactor coolant pressure boundary (RCPB). The vessel is the component of most concern in regard to brittle failure. Therefore, the LCO limits apply mainly to the vessel.

10 CFR 50, Appendix G (Ref. 1), requires the establishment of P/T limits for material fracture toughness requirements of the RCPB materials. Reference 1 requires an adequate margin to brittle failure during normal operation, anticipated operational occurrences, and system hydrostatic tests. It mandates the use of the American Society of Mechanical Engineers (ASME) Code, Section III, Appendix G (Ref. 2).

The actual shift in the RT_{NDT} of the vessel material will be established periodically by removing and evaluating the irradiated reactor vessel material specimens, in accordance with ASTM E 185 (Ref. 3) and 10 CFR 50, Appendix H (Ref. 4). The operating P/T limit curves will be adjusted, as necessary, based on the evaluation findings and the recommendations of Reference 5.

BASES

BACKGROUND (continued)

The P/T limit curves are composite curves established by superimposing limits derived from stress analyses of those portions of the reactor vessel and head that are the most restrictive. At any specific pressure, temperature, and temperature rate of change, one location within the reactor vessel will dictate the most restrictive limit. Across the span of the P/T limit curves, different locations are more restrictive, and, thus, the curves are composites of the most restrictive regions.

The heatup curve represents a different set of restrictions than the cooldown curve because the directions of the thermal gradients through the vessel wall are reversed. The thermal gradient reversal alters the location of the tensile stress between the outer and inner walls.

The criticality limits include the Reference 1 requirement that they be at least 22°C above the heatup curve or the cooldown curve and not lower than the minimum permissible temperature for the inservice leak and hydrostatic testing.

The consequence of violating the LCO limits is that the RCS has been operated under conditions that can result in brittle failure of the RCPB, possibly leading to a nonisolable leak or loss of coolant accident. In the event these limits are exceeded, an evaluation must be performed to determine the effect on the structural integrity of the RCPB components. The ASME Code, Section XI, Appendix E (Ref. 6), provides a recommended methodology for evaluating an operating event that causes an excursion outside the limits.

APPLICABLE SAFETY ANALYSES

The P/T limits are not derived from Design Basis Accident (DBA) analyses. They are prescribed during normal operation to avoid encountering pressure, temperature, and temperature rate of change conditions that might cause undetected flaws to propagate and cause nonductile failure of the RCPB, a condition that is unanalyzed.

Since the P/T limits are not derived from any DBA, there are no acceptance limits related to the P/T limits. Rather, the P/T limits are acceptance limits themselves since they preclude operation in an unanalyzed condition.

RCS P/T limits satisfy Criterion 2 of the NRC Policy Statement.

BASES

LCO

The elements of this LCO are:

a. RCS pressure, temperature, and heatup or cooldown rate are within the limits specified in the PTLR.

b. RCS pressure and temperature are within the criticality limits specified in the PTLR.

c The reactor vessel flange and the head flange temperatures are within the limits of the PTLR when reactor vessel head bolting studs are tensioned.

These limits define allowable operating regions and permit a large number of operating cycles while also providing a wide margin to nonductile failure.

The rate of change of temperature limits control the thermal gradient through the vessel wall and are used as inputs for calculating the heatup, cooldown, and inservice leak and hydrostatic testing P/T limit curves. Thus, the LCO for the rate of change of temperature restricts stresses caused by thermal gradients and also ensures the validity of the P/T limit curves.

Violation of the limits places the reactor vessel outside of the bounds of the stress analyses and can increase stresses in other RCS components. The consequences depend on several factors, as follows:

a. The severity of the departure from the allowable operating pressure temperature regime or the severity of the rate of change of temperature;

b. The length of time the limits were violated (longer violations allow the temperature gradient in the thick vessel walls to become more pronounced); and

c. The existence, sizes, and orientations of flaws in the vessel material.

APPLICABILITY

The potential for violating a P/T limit exists at all times. For example, P/T limit violations could result from ambient temperature conditions that result in the reactor vessel metal temperature being less than the minimum allowed temperature for boltup. Therefore, this LCO is applicable even when fuel is not loaded in the core.

BASES

ACTIONS

The Actions designated by this Specification are based on the premise that a violation of the limits occurred during normal plant maneuvering. Severe violations caused by abnormal transients, which may be accompanied by equipment failures, may also require additional actions based on emergency operating procedures.

A.1 and A.2

Operation outside the P/T limits while in MODE 1, 2, or 3 must be corrected so that the RCPB is returned to a condition that has been verified by stress analyses.

The 30 minute completion Time reflects the urgency of restoring the parameters to within the analyzed range. Most violations will not be severe, and the activity can be accomplished in this time in a controlled manner.

Besides restoring operation within limits, an evaluation is required to determine if RCS operation can continue. The evaluation must verify the RCPB integrity remains acceptable and must be completed if continued operation is desired. Several methods may be used, including comparison with pre-analyzed transients in the stress analyses, new analyses, or inspection of the components.

ASME Code, Section XI, Appendix E (Ref. 6), may be used to support the evaluation. However, its use is restricted to evaluation of the vessel beltline.

The 72 hour Completion time is reasonable to accomplish the evaluation of a mild violation. More severe violations may require special, event specific stress analyses or inspections. A favorable evaluation must be completed if continued operation is desired.

Condition A is modified by a Note requiring Required Action A.2 be completed whenever the Condition is entered. The Note emphasizes the need to perform the evaluation of the effects of the excursion outside the allowable limits. Restoration alone per Required Action A.1 is insufficient because higher than analyzed stresses may have occurred and may have affected the RCPB integrity.

BASES

ACTIONS (continued)

B.1 and B.2

If a Required Action and associated Completion Time of Condition A are not met, the plant must be brought to a lower MODE because either the RCS remained in an unacceptable P/T region for an extended period of increased stress, or a sufficiently severe event caused entry into an unacceptable region. Either possibility indicates a need for more careful examination of the event, best accomplished with the RCS at reduced pressure and temperature. With the reduced pressure and temperature conditions, the possibility of propagation of undetected flaws is decreased.

Pressure and temperature are reduced by bringing the plant to at least MODE 3 within 12 hours and to MODE 4 within 36 hours. The allowed Completion times are reasonable based on operating experience, to reach the required plant conditions from full power conditions in an orderly manner and without challenging plant systems.

C.1 and C.2

Operation outside the P/T limits in other than MODES 1, 2, and 3 (including defueled conditions) must be corrected so that the RCPB is returned to a condition that has been verified by stress analyses. The Required Action must be initiated without delay and continued until the limits are restored.

Besides restoring the P/T limit parameters to within limits, an evaluation is required to determine if RCS operation is allowed. This evaluation must verify that the RCPB integrity is acceptable and must be completed before approaching criticality or heating up to > 93°C. Several methods may be used, including comparison with pre-analyzed transients, new analyses, or inspection of the components. ASME Section XI, Appendix E (Ref. 6), may be used to support the evaluation; however, its use is restricted to evaluation of the beltline.

SURVEILLANCE REQUIREMENTS

SR 3.4.9.1

Verification that operation is within PTLR limits is required every 30 minutes when RCS pressure and temperature conditions are undergoing planned changes. This Frequency is considered reasonable in view of the control room indication available to monitor RCS status. Also, since temperature rate of change limits are specified in hourly increments, 30 minutes permits assessment and correction of minor deviations.

BASES

SURVEILLANCE REQUIREMENTS (continued)

SR 3.4.9.1 (continued)

Surveillance for heatup, cooldown, or inservice leakage and hydrostatic testing may be discontinued when the criteria given in the relevant plant procedure for ending the activity are satisfied.

This SR has been modified by a Note that requires this Surveillance to be performed only during system heatup and cooldown operations and inservice leakage and hydrostatic testing.

SR 3.4.9.2

A separate limit is used when the reactor is approaching criticality. Consequently, the RCS pressure and temperature must be verified within the appropriate limits before withdrawing control rods that will make the reactor critical.

Performing the Surveillance within 15 minutes before control rod withdrawal for the purpose of achieving criticality provides adequate assurance that the limits will not be exceeded between the time of the Surveillance and the time of the control rod withdrawal.

SR 3.4.9.3 and SR 3.4.9.4 and SR 3.4.9.5

Limits on the reactor vessel flange and head flange temperatures are generally bounded by the other P/T limits during system heatup and cooldown. However, operations approaching MODE 4 and MODE 5 and in MODE 4 with RCS temperature less than or equal to certain specified values require assurance that these temperatures meet the LCO limits.

The flange temperatures must be verified to be above the limits 30 minutes before and while tensioning the vessel head bolting studs to ensure that once the head is tensioned the limits are satisfied. When in MODE 4 with RCS temperature $\leq$ 27°C, 30 minute checks of the flange temperatures are required because of the reduced margin to the limits. When in MODE 4 with RCS temperature $\leq$ 38°C, monitoring of the flange temperature is required every 12 hours to ensure the temperatures are within the limits specified in the PTLR.

The 30 minute Frequency reflects the urgency of maintaining the temperatures within limits, and also limits the time that the temperature limits could be exceeded. The 12 hour Frequency is reasonable based on the rate of temperature change possible at these temperatures.

BASES

REFERENCES

1. 10 CFR 50, Appendix G.
2. ASME, Boiler and Pressure Vessel Code, Section III, Appendix G.
3. ASTM E 185-82, July 1982.
4. 10 CFR 50, Appendix H.
5. Regulatory Guide 1.99, Revision 2, May 1988.
6. ASME, Boiler and Pressure Vessel Code, Section XI, Appendix E.

B 3.4 REACTOR COOLANT SYSTEM (RCS)

B 3.4.10 Reactor Steam Dome Pressure

BASES

BACKGROUND	The reactor steam dome pressure is an assumed initial condition of Design Basis Accidents (DBAs) and transients and is also an assumed value in the determination of compliance with reactor pressure vessel overpressure protection criteria.
APPLICABLE SAFETY ANALYSES	The reactor steam dome pressure of ≤ 7.17 MPaG is an initial condition of the vessel overpressure protection analysis of Reference 1. This analysis assumes an initial maximum reactor steam dome pressure and evaluates the response of the pressure relief system, primarily the safety/relief valves, during the limiting pressurization transient. The determination of compliance with the overpressure criteria is dependent on the initial reactor steam dome pressure; therefore, the limit on this pressure ensures that the assumptions of the overpressure protection analysis are conserved. Reference 2 also assumes an initial reactor steam dome pressure for the analysis of DBAs and transients used to determine the limits for fuel cladding integrity MCPR (see Bases for LCO 3.2.2, “MINIMUM CRITICAL POWER RATIO (MCPR)”) and 1% cladding plastic strain (see Bases for LCO 3.2.1, “AVERAGE PLANAR LINEAR HEAT GENERATION RATE (APLHGR)”). Reactor steam dome pressure satisfies the requirements of Criterion 2 of the NRC Policy Statement.
LCO	The specified reactor steam dome pressure limit of ≤ 7.17 MPaG ensures the plant is operated within the assumptions of the transient analyses. Operation above the limit may result in a transient response more severe than analyzed.
APPLICABILITY	In MODES 1 and 2, the reactor steam dome pressure is required to be less than or equal to the limit. In these MODES, the reactor may be generating significant steam, and the DBAs and transients are bounding. In MODES 3, 4, and 5, the limit is not applicable because the reactor is shut down. In these MODES, the reactor pressure is well below the required limit, and no anticipated events will challenge the overpressure limits.

BASES

ACTIONS

A.1

With the reactor steam dome pressure greater than the limit, prompt action should be taken to reduce pressure to below the limit and return the reactor to operation within the bounds of the analyses. The 15 minute Completion Time is reasonable considering the importance of maintaining the pressure within limits. This Completion Time also ensures that the probability of an accident while pressure is greater than the limit is minimal. If the operator is unable to restore the reactor steam dome pressure to below the limit, then the reactor should be brought to MODE 3 to be within the assumptions of the transient analyses.

B.1

If the reactor steam dome pressure cannot be restored to within the limit within the associated Completion Time, the plant must be brought to a MODE in which the LCO does not apply. To achieve this status, the plant must be brought to at least MODE 3 within 12 hours. The allowed Completion Time of 12 hours is reasonable, based on operating experience, to reach MODE 3 from full power conditions in an orderly manner and without challenging plant systems.

SURVEILLANCE REQUIREMENTS

SR 3.4.10.1

Verification that reactor steam dome pressure is ≤ 7.17 MPaG ensures that the initial conditions of the DBAs and transients are met. Operating experience has shown the 12 hour Frequency to be sufficient for identifying trends and verifying operation within safety analyses assumptions.

REFERENCES

1. DCD Tier 2, Section 5.2.2.
2. DCD Tier 2, Chapter 15.

B 3.5 EMERGENCY CORE COOLING SYSTEMS (ECCS)

B 3.5.1 ECCS – Operating

BASES

BACKGROUND

The ECCS is designed, in conjunction with the primary and secondary containment, to limit the release of radioactive materials to the environment following a loss of coolant accident (LOCA). The ECCS directs water to both inside and outside the core shroud to cool the core during a LOCA. The ECCS network is composed of the High Pressure Core Flooder (HPCF) System, the Reactor Core Isolation Cooling (RCIC) System, and the low pressure core flooder (LPFL) mode of the Residual Heat Removal (RHR) System. The ECCS also consists of the Automatic Depressurization System (ADS). The suppression pool provides the required source of water for the ECCS. Although no credit is taken in the safety analyses for the condensate storage tank (CST), it is capable of providing a source of water for both the RCIC System and the two HPCF subsystems.

On receipt of an initiation signal, ECCS pumps automatically start; simultaneously the system aligns, and the pumps inject water, taken either from the CST or suppression pool, into the Reactor Coolant System (RCS) as RCS pressure is overcome by the discharge pressure of the ECCS pumps. Although the system is initiated, ADS action is delayed, to allow time for confirmation of the initiating signal. The discharge pressure of the HPCF pumps exceeds that of the RCS, and the pumps inject coolant into the flooding sparger above the core. Once the steam driven RCIC turbine has accelerated, the RCIC pump discharge pressure exceeds that of the RCS and injects coolant into the reactor pressure vessel (RPV) via one of the feedwater lines. If the break is small, RCIC or either of the HPCF pumps will maintain coolant inventory, as well as vessel level, while the RCS is still pressurized. If the RCIC and HPCFs fail, they are backed up by ADS in combination with the LPFL. In this event, the ADS timed sequence would be allowed to time out and open the selected safety/relief valves (S/RVs), depressurizing the RCS and allowing the LPFL to overcome RCS pressure and inject coolant into the vessel. If the break is large, RCS pressure drops rapidly, and the HPCF and LPFL subsystems cool the core.

Water from the break returns to the suppression pool where it is used again and again. Water in the suppression pool is circulated through a heat exchanger cooled by the Reactor Building Cooling Water (RCW) System. The ECCS network is effective in cooling the core regardless of the size or location of the piping break.

BASES

BACKGROUND (continued)

Apart from its ECCS function the RCIC System is also designed to operate either automatically or manually following reactor pressure vessel (RPV) isolation accompanied by a loss of coolant flow from the feedwater system to provide adequate core cooling and control of RPV water level. Under these conditions, the HPCF and RCIC systems perform similar functions. The RCIC System design requirements ensure that the criteria of Reference 11 are satisfied.

All ECCS subsystems are designed to ensure that no single active component failure will prevent automatic initiation and successful operation of the minimum required ECCS subsystems.

The ECCS injection systems are arranged in three separate divisions each comprised of a high pressure and low pressure subsystem. ECCS Division 1 consists of the RCIC system and LPFL-A. ECCS Division 2 consists of HPCF-B and LPFL-B. ECCS Division 3 consists of HPCF-C and LPFL-C.

LPFL is an independent operating mode of the RHR System. There are three LPFL subsystems. Each LPFL subsystem (Ref. 2) consists of a motor driven pump, a heat exchanger, piping, and valves to transfer water from the suppression pool to the RPV. Each LPFL subsystem has its own suction and discharge piping. Each LPFL subsystem takes suction from the suppression pool. LPFL subsystems B and C have dedicated discharge nozzles to the RPV that connect to flooding spargers in the vessel annulus area outside the core shroud. LPFL subsystem A discharges to one of the main feedwater injection lines and thus also supplies coolant to the vessel annulus area outside the core shroud via the feedwater sparger. The LPFL subsystems are designed to provide core cooling at low RPV pressure. Upon receipt of an initiation signal, each LPFL pump is automatically started approximately 10 seconds after electrical power is available. When the RPV pressure drops sufficiently, LPFL flow to the RPV begins. RHR System valves in the LPFL flow path are automatically positioned to ensure the proper flow path for water from the suppression pool to inject into the RPV. A discharge test line is provided to route water from and to the suppression pool to allow testing of each LPFL pump without injecting water into the RPV.

The HPCF System is comprised of two separate subsystems. Each HPCF subsystem (Ref. 1) consists of a single motor driven pump, a flooder sparger above the core, and piping and valves to transfer water from the suction source to the sparger. Suction piping is provided from the CST and the suppression pool. Pump suction is normally aligned to the CST source to minimize injection of suppression pool water into the RPV. However, if the CST water supply is low or the suppression pool

BASES

BACKGROUND (continued)

level is high, an automatic transfer to the suppression pool water source ensures a water supply for continuous operation of the HPCF System. The HPCF System is designed to provide core cooling over a wide range of RPV pressures, (0.69 to 8.12 MPaD), vessel to the air space of the compartment containing the water source for the pump suction. Upon receipt of an initiation signal, the HPCF pumps automatically start (when electrical power is available) and valves in the flow path begin to open. Since the HPCF System is designed to operate over the full range of RPV pressures, HPCF flow begins as soon as the necessary valves are open. A full flow test line is provided to route water from and to the suppression pool to allow testing of the HPCF System during normal operation without injecting water into the RPV.

The RCIC System (Ref. 1) consists of a steam driven turbine pump unit, piping, and valves to provide steam to the turbine, as well as piping and valves to transfer water from the suction source to the core via the feedwater system line. Suction piping is provided from the condensate storage tank (CST) and the suppression pool. Pump suction is normally aligned to the CST to minimize injection of suppression pool water into the RPV. However, if the CST water supply is low, or the suppression pool level is high, an automatic transfer to the suppression pool water source ensures a water supply for continuous operation of the RCIC System. The steam supply to the turbine is piped from main steam line B, upstream of the inboard main steam line isolation valve.

The RCIC System is designed to provide core cooling for a wide range of reactor pressures, 1.035 MPaD to 8.12 MPaD, vessel to the air space of the compartment containing the water source for the pump suction. Upon receipt of an initiation signal, the RCIC turbine accelerates to a specified speed. As the RCIC flow increases, the turbine control valve is automatically adjusted to maintain design flow. Exhaust steam from the RCIC turbine is discharged to the suppression pool. A full flow test line is provided to route water from and to the suppression pool to allow testing of the RCIC System during normal operation without injecting water into the RPV. For the station black out scenario, where all AC power from the offsite AC circuits and from the standby diesel generators are assumed to be lost, RCIC is designed to provide makeup water to the RPV. Diverse alternatives to RCIC are provided by the Combustion Turbine Generator (CTG) and the AC-Independent Water Addition (ACIWA) mode of RHR(C) (References 13 and 14). If RCIC is inoperable, water can be injected into the RPV either by powering other ECCS subsystems from the CTG or by the Fire Protection System (FPS) using the ACIWA mode of RHR(C).

BASES

BACKGROUND (continued)

The ECCS pumps are provided with minimum flow bypass lines, which discharge to the suppression pool. The valves in these lines automatically open to prevent pump damage due to overheating when other discharge line valves are closed or RPV pressure is greater than the LPFL pump discharge pressures following system initiation. To ensure rapid delivery of water to the RPV and to minimize water hammer effects, the ECCS discharge line “keep fill” systems are designed to maintain all pump discharge lines filled with water.

The ADS (Ref. 1) consists of 8 of the 18 S/RVs. It is designed to provide depressurization of the primary system during a small break LOCA if RCIC and HPCF fail or are unable to maintain required water level in the RPV. ADS operation reduces the RPV pressure to within the operating pressure range of the low pressure ECCS subsystems (LPFL), so that these subsystems can provide core cooling. Each ADS valve is supplied with pneumatic power from its own dedicated accumulator located in the drywell. The ACS supplies the nitrogen (at pressure) necessary to assure the ADS accumulators remain charged for use in emergency actuation. If nitrogen is not available from the ACS, nitrogen is supplied from the High Pressure Nitrogen Gas Supply System via high pressure nitrogen gas storage bottles.

APPLICABLE SAFETY ANALYSES

The ECCS performance is evaluated for the entire spectrum of break sizes for a postulated LOCA. The accidents for which ECCS operation is required are presented in References 2, 3, and 4. The required analyses and assumptions are defined in 10 CFR 50 (Ref. 5), and the results of these analyses are described in Reference 6.

This LCO helps to ensure that the following acceptance criteria for the ECCS, established by 10 CFR 50.46 (Ref. 7), will be met following a LOCA assuming the worst case single active component failure in the ECCS:

a. Maximum fuel element cladding temperature is ≤ 1204°C;

b. Maximum cladding oxidation is ≤ 0.17 times the total cladding thickness before oxidation;

c. Maximum hydrogen generation from zirconium water reaction is ≤ 0.01 times the hypothetical amount that would be generated if all of the metal in the cladding surrounding the fuel, excluding the cladding surrounding the plenum volume, were to react;

d. The core is maintained in a coolable geometry; and

e. Adequate long term cooling capability is maintained.

BASES

APPLICABLE SAFETY ANALYSES (continued)

The limiting single failures are discussed in Reference 6. For any LOCA, failure of ECCS subsystems in Division 2 (HPCF-B and LPFL-B) or Division 3 (HPCF-C and LPFL-C) due to failure of its associated diesel generator is the most severe failure. One ADS valve failure is analyzed as a limiting single failure for events requiring ADS operation, however, the above single failure of a diesel generator, and associated motor driven ECCS injection subsystems in the division, is a more limiting failure. The remaining OPERABLE ECCS subsystems provide the capability to adequately cool the core and prevent excessive fuel damage. Additional functions of the RCIC System are to respond to transient events by providing makeup coolant to the nuclear vessel and to be an independent AC source during station blackout.

In order to provide increased margin to ECCS acceptance criteria (i.e., 10 CFR 50.46), the ECCS was designed to the more stringent goal of no core uncovery for any postulated DBA or transient event, even given the most limiting single failure. This design philosophy resulted in substantially improved ECCS performance such that, when analyzed consistent with typical licensing basis methodologies, (i.e., assuming only the traditional limiting single failure), there was considerable margin relative to existing regulatory requirements. The magnitude of such margin suggested that the ECCS would still be able to perform its intended safety function, even under situations with some equipment initially out of service or unavailable due to multiple postulated failures. Therefore, further ECCS analyses were performed (see Reference 8) in an attempt to identify the minimum amount of ECCS equipment that must operate such that the plant could still meet the 10 CFR 50.46 acceptance criteria listed above.

Analyses were performed for a set of identified limiting scenarios, assuming the unavailability (or failure) of multiple ECCS subsystems, and using the same calculational methods as were used for the traditional design basis analyses. The results of these analyses demonstrated that “success” (i.e., no violation of the above stated 50.46 limits) was achieved under various postulated accident scenarios provided at least one motor driven ECCS injection subsystem was capable of successfully injecting water into the RPV. For any such scenarios also requiring depressurization, “success” was achieved with the actuation of at least five SR/Vs in the ADS mode (in conjunction with successful vessel injection from the one required ECCS subsystem). Thus, it was confirmed that the ABWR ECCS is able to perform its intended safety function (in accordance with the applicable regulatory requirements), even for postulated events involving limiting single failures that might occur with less than the full complement of ECCS subsystems initially available.

The ECCS satisfy Criterion 3 of the NRC Policy Statement.

BASES

LCO

Each ECCS subsystem and eight ADS valves are required to be OPERABLE. The ECCS subsystems are defined as the three LPFL subsystems, the two HPCF subsystems, and the RCIC System. The high pressure ECCS subsystems are defined as the two HPCF subsystems and the RCIC System.

With less than the required number of ECCS subsystems OPERABLE during a limiting design basis LOCA concurrent with the worst case single failure, the margins to the limits specified in 10 CFR 50.46 (Ref. 7) would be reduced. Furthermore, all ECCS subsystems are assumed to be initially available in the comprehensive set of analyses performed to satisfy the single failure criterion required by 10 CFR 50.46 (Ref. 7). Thus all ECCS subsystems must be OPERABLE. The ECCS is supported by other systems that provide automatic ECCS initiation signals (LCO 3.3.1.1, “SSLC Sensor Instrumentation” and LCO 3.3.1.4, “ESF Actuation Instrumentation”), cooling and service water to cool rooms containing ECCS equipment (LCO 3.7.1, “Reactor Building Cooling Water (RCW) System, Reactor Service Water (RSW) System and Ultimate Heat Sink (UHS) – Operating”), and electrical power (LCO 3.8.1, “AC Sources – Operating,” and LCO 3.8.4, “DC Sources – Operating”).

A LPFL subsystem may be considered OPERABLE during alignment and operation for decay heat removal when below the actual RHR cut in permissive pressure in MODE 3, if capable of being manually realigned (remote or local) to the LPFL mode and not otherwise inoperable. At these low pressures and decay heat levels, a reduced complement of ECCS subsystems can provide the required core cooling, thereby allowing operation of an RHR shutdown cooling loop when necessary.

APPLICABILITY

All ECCS subsystems are required to be OPERABLE during MODES 1, 2, and 3 when there is considerable energy in the reactor core and core cooling would be required to prevent fuel damage in the event of a break in the primary system piping. In MODES 2 and 3, the RCIC System is not required to be OPERABLE when pressure is ≤ 1.03 MPaG since other ECCS subsystems can provide sufficient flow to the vessel. In MODES 2 and 3, the ADS function is not required when pressure is ≤ 0.343 MPaG because the low pressure ECCS subsystems (LPFL) are capable of providing flow into the RPV below this pressure. ECCS requirements for MODES 4 and 5 are specified in LCO 3.5.2, “ECCS – Shutdown.”

BASES

ACTIONS

A.1, B.1.1, B.1.2, B.2, and B.3

With one or two ECCS subsystem(s) inoperable provided RCIC is OPERABLE (Condition A), the inoperable subsystem(s) must be restored to OPERABLE status within 14 days. If RCIC is inoperable or RCIC in combination with any one other ECCS subsystem is inoperable (Condition B), the inoperable subsystem(s) can be restored to OPERABLE status within 14 days provided the Combustion Turbine Generator (CTG) is verified, initially within 7 days and once per 8 hours thereafter, to be functional and capable of being aligned to each of the ESF buses or the AC-Independent Water Addition (ACIWA) mode of RHR(C) is verified to be functional within 7 days. In these Conditions, the remaining OPERABLE subsystems provide more than adequate core cooling during a LOCA. However, overall ECCS reliability is reduced; and a single failure impacting one or more of the remaining OPERABLE subsystems concurrent with a LOCA would result in degraded ECCS performance and reduced margins to 10 CFR 50.46 acceptance criteria. Nevertheless, even given the worse case single failure concurrent with a LOCA initiated from this Condition, there will always be at least one ECCS subsystem available to inject water into the RPV. (For the special case of an LPFL-A line break and failure of a diesel generator, the CTG would be available to provide emergency electrical power to the ECCS pumps.) Additional analyses of limiting design basis scenarios demonstrate that in such cases 10 CFR 50.46 acceptance criteria will still be met. Furthermore, results of PRA sensitivity studies performed (References 9 and 15) for Condition A show that this situation is acceptable from an overall plant risk perspective.

For Condition B, the PRA sensitivity studies performed (Ref. 9) showed that, with RCIC inoperable, the change in core damage frequency is relatively large for station blackout events. Therefore, if the CTG is verified to be functional and the circuit breakers are capable of being aligned to each of the ESF buses (LCO 3.8.1), other ECCS subsystems can be powered by the CTG during a station blackout to compensate for RCIC's inoperability. Alternatively, to compensate for RCIC's inoperability, if the ACIWA mode of RHR(C) subsystem is verified to be functional, the Fire Protection System (FPS) can be used to inject water into the RPV during a station blackout with the RPV sufficiently depressurized. The ACIWA is verified to be functional by stroking one complete cycle of each of the two manual valves in the FPS connection to RHR(C) injection line, by starting the FPS diesel-driven fire pump and verifying that the FPS header pressure is maintained, and by stroking one complete cycle of the RHR(C) subsystem injection valve using its handwheel.

BASES

ACTIONS (continued)

A.1, B.1.1, B.1.2, B.2, and B.3 (continued)

If the CTG or ACIWA is not available, the Completion Time for Condition B is limited to 7 days based on an overall risk perspective. The 14 day Completion Times for both Conditions A and B are based on a risk perspective and the low probability of a LOCA occurring during this period and the overall redundancy provided by the ECCS and its continued ability to perform its intended safety function, while assuring a return to full ECCS capability in a reasonable time so as to not significantly impact overall ECCS reliability.

C.1.1.1, C.1.1.2, C.1.2, C.2, D.1 and E.1

With RCIC and any other two ECCS subsystems inoperable, provided at least one HPCF subsystem is OPERABLE, one ECCS subsystem must be restored to OPERABLE status within 7 days. With any three ECCS subsystems inoperable, provided RCIC is OPERABLE, one ECCS subsystem must be restored to OPERABLE status within 3 days. With all three high pressure ECCS subsystems inoperable, at least one high pressure ECCS subsystem must be restored to OPERABLE status within 12 hours. In these Conditions, the remaining OPERABLE subsystems provide adequate core cooling during a LOCA, but the single failure criterion capability for all combinations of systems out of service is not satisfied. Therefore, the Completion Times are limited to 7 days, 3 days and 12 hours, respectively, depending on the combination of ECCS subsystems that are inoperable. Additional analyses of limiting design basis scenarios demonstrate that in such cases 10 CFR 50.46 acceptance criteria will still be met (Ref. 8). Furthermore, results of PRA sensitivity studies performed (References 9 and 15) show that this situation is acceptable from an overall plant risk perspective.

Additionally, for Condition C, where RCIC is inoperable, either the CTG must be verified, within 72 hours, to be functional and the circuit breakers are capable of being aligned to each of the ESF buses, or, alternatively, the ACIWA mode of RHR(C) subsystem must be verified to be functional within 72 hours. If the CTG is verified to be functional and capable of being aligned to each of the ESF buses (LCO 3.8.1), other ECCS subsystems can be powered by the CTG during a station blackout to compensate for RCIC's inoperability. If the ACIWA mode of RHR(C) subsystem is verified to be functional, the Fire Protection System (FPS) can be used to inject water into the RPV during a station blackout with the RPV sufficiently depressurized. The ACIWA is verified to be functional by stroking one complete cycle of each of the two manual valves in the FPS

BASES

ACTIONS (continued)

C.1.1.1, C.1.1.2, C.1.2, C.2, D.1 and E.1 (continued)

connection to RHR(C) injection line, by starting the FPS diesel-driven fire pump and verifying that the FPS header pressure is maintained, and by stroking one complete cycle of the RHR(C) subsystem injection valve using its handwheel. If the CTG or ACIWA is not available, the Completion Time for Condition C is limited to 72 hours based on an overall risk perspective.

Since the ECCS availability is reduced relative to Conditions A and B, a more restrictive Completion Time is imposed. The 7 and 3 day Completion Times for Required Actions C.2 and D.1 are based on the low probability of a LOCA occurring during this period and the overall redundancy provided by the ECCS and its continued ability to perform the intended safety function while assuring a return towards full ECCS capability in a reasonable time so as to not significantly impact overall ECCS reliability. The Completion Time for Required Action D.1 is more restrictive than the Completion Time for Required Action C.2 because of the lesser capability of RCIC compared to the other high pressure ECCS subsystems (HPCF).

The 12 hour Completion Time for Required Action E.1 is more restrictive because a LOCA may necessitate an unwanted actuation of the ADS to reach the operating conditions of the low pressure ECCS subsystems. However, any one low pressure ECCS subsystem is capable of maintaining core coolant during a LOCA for the spectrum of break sizes.

F.1 and F.2

If any Required Action and associated Completion Time of Condition A, B, C, D, or E are not met, or when any four ECCS subsystems are inoperable, the plant must be brought to a MODE in which the LCO does not apply. To achieve this status, the plant must be brought to at least MODE 3 within 12 hours and to MODE 4 within 36 hours. The allowed Completion Times are reasonable, based on operating experience, to reach the required plant conditions from full power conditions in an orderly manner and without challenging plant systems.

BASES

ACTIONS (continued)

G.1 and H.1

With one or two ADS valves inoperable, the ADS valves must be restored to OPERABLE status within 14 days. With three ADS valves inoperable, one ADS valve must be restored to OPERABLE status within 7 days. The LCO requires eight ADS valves to be OPERABLE to provide the ADS function. Reference 6 contains the results of the traditional design basis analysis that evaluated the effect of one ADS valve being out of service. However, the results of this analysis are bound by additional analyses or more limiting single failure scenarios which assume the unavailability of multiple ADS valves (see Reference 8). Per these analyses, operation of only five ADS valves will provide the required depressurization. However, overall reliability of the ADS is reduced and there is a reduction in depressurization capability. Therefore, operation is only allowed for a limited time. The 7 and 14 day Completion Times are based on the low probability of a LOCA occurring during this period and the overall redundancy and capacity of the ADS System and its continued ability to perform its intended safety function, while assuring a return towards full ADS capability in a reasonable time so as to not significantly impact overall ADS or ECCS reliability. Furthermore, Conditions G and H are modified by a NOTE that allows concurrent existence with Conditions A, B, C, or D, and Conditions A, B, or C, respectively. Concurrent existence is justified by the additional ECCS analyses that were performed (Ref. 8) and greatly simplifies the necessary Required Actions.

I.1 and I.2

If the Required Action and associated Completion Time of Condition G or H is not met or if four or more ADS valves are inoperable, the plant must be brought to a condition in which the LCO does not apply. To achieve this status, the plant must be brought to at least MODE 3 within 12 hours and reactor steam dome pressure reduced to $\leq$ 0.343 MPaG within 36 hours. The allowed Completion Times are reasonable, based on operating experience, to reach the required plant conditions from full power conditions in an orderly manner and without challenging plant systems.

BASES

SURVEILLANCE REQUIREMENTS

SR 3.5.1.1

The flow path piping has the potential to develop voids and pockets of entrained air. Maintaining the pump discharge lines of the HPCF subsystem, RCIC System, and LPFL subsystems full of water ensures that the systems will perform properly, injecting their full capacity into the RCS upon demand. This will also prevent a water hammer following an ECCS initiation signal. One acceptable method of ensuring the lines are full is to vent at the high points. The 31 day Frequency is based on operating experience, on the procedural controls governing system operation, and on the gradual nature of void buildup in the ECCS piping.

SR 3.5.1.2

Verifying the correct alignment for manual, power operated, and automatic valves in the ECCS flow paths provides assurance that the proper flow paths will exist for ECCS operation. This SR does not apply to valves that are locked, sealed, or otherwise secured in position since these valves were verified to be in the correct position prior to locking, sealing, or securing. A valve that receives an initiation signal is allowed to be in a nonaccident position provided the valve will automatically reposition in the proper stroke time. This SR does not require any testing or valve manipulation; rather, it involves verification that those valves potentially capable of being mispositioned are in the correct position. This SR does not apply to valves that cannot be inadvertently misaligned, such as check valves.

The 31 day Frequency of this SR was derived from the Inservice Testing Program requirements for performing valve testing at least once every 92 days. The Frequency of 31 days is further justified because the valves are operated under procedural control and because improper valve alignment would only affect a single subsystem. This Frequency has been shown to be acceptable through operating experience.

This SR is modified by a Note that allows a LPFL subsystem to be considered OPERABLE during alignment and operation for decay heat removal with reactor steam dome pressure less than the RHR cut in permissive pressure in MODE 3, if capable of being manually realigned (remote or local) to the LPFL mode and not otherwise inoperable. This allows operation in the RHR shutdown cooling mode during MODE 3 if necessary.

BASES

SURVEILLANCE REQUIREMENTS (continued)

SR 3.5.1.3

Verification every 31 days that ADS nitrogen accumulator pressure is ≥ 1.11 MPaG assures adequate nitrogen pressure for reliable ADS operation. The accumulator on each ADS valve provides pneumatic pressure for valve actuation. The designed pneumatic supply pressure requirements for the accumulator are such that, following a failure of the pneumatic supply to the accumulator, at least one valve actuation can occur with the drywell at design pressure, or five valve actuations can occur with the drywell at atmospheric pressure (Ref. 10). The ECCS safety analysis assumes only one actuation to achieve the depressurization required for operation of the low pressure ECCS. This minimum required pressure of 1.11 MPaG is provided by the High Pressure Nitrogen Gas Supply System (HPIN). The 31 day Frequency takes into consideration administrative control over operation of the HPIN and alarms for low pneumatic pressure (Ref. 12).

SR 3.5.1.4, SR 3.5.1.5 and SR 3.5.1.6

The performance requirements of the ECCS pumps are determined through application of the 10 CFR 50, Appendix K, criteria (Ref. 5). These periodic Surveillances are performed (in accordance with the ASME Code, Section XI, requirements for the ECCS pumps) to verify that the ECCS pumps will develop the flow rates required by the respective analyses. The ECCS pump flow rates ensure that adequate core cooling is provided to satisfy the acceptance criteria of 10 CFR 50.46 (Ref. 7). The RCIC pump flow rates also ensure that the system can maintain reactor coolant inventory during pressurized conditions with the RPV isolated.

The pump flow rates are verified against a system head that is equivalent to the RPV pressure expected during a LOCA. The total system pump outlet pressure is adequate to overcome the elevation head pressure between the pump suction and the vessel discharge, the piping friction losses, and RPV pressure present during LOCAs. These values may be established during pre-operational testing.

The flow tests for the RCIC System are performed at two different pressure ranges such that system capability to provide rated flow is tested both at the higher and lower operating ranges of the system. Since the required reactor steam dome pressure must be available to perform SR 3.5.1.5 and SR 3.5.1.6 sufficient time is allowed after adequate pressure is achieved to perform these SRs. Reactor startup is allowed prior to performing the low pressure Surveillance because the reactor pressure is low and the time to satisfactorily perform the Surveillance is

BASES

SURVEILLANCE REQUIREMENTS (continued)

SR 3.5.1.4, SR 3.5.1.5 and SR 3.5.1.6 (continued)

short. The reactor pressure is allowed to be increased to normal operating pressure since it is assumed that the low pressure test has been satisfactorily completed and there is no indication or reason to believe that RCIC is inoperable. Therefore, these SRs are modified by Notes that state the Surveillances are not required to be performed until 12 hours after the specified reactor steam dome pressure is reached.

A 92 day Frequency for SR 3.5.1.4 and SR 3.5.1.5 is consistent with the Inservice Testing Program requirements. The 18 month Frequency for SR 3.6.1.6 is based on the need to perform this Surveillance under the conditions that apply during a plant outage and the potential for an unplanned transient if the Surveillance were performed with the reactor at power. Operating experience has shown that these components usually pass the SR when performed at the 18 month Frequency, which is based on the refueling cycle. Therefore, the Frequency was concluded to be acceptable from a reliability standpoint.

SR 3.5.1.7

The ECCS subsystems are required to actuate automatically to perform their design functions. This Surveillance test verifies that, with a required system initiation signal (actual or simulated), the automatic initiation logic of HPCF, RCIC, and LPFL will cause the systems or subsystems to operate as designed, including actuation of the system throughout its emergency operating sequence, automatic pump startup, and actuation of all automatic valves to their required positions. This Surveillance also ensures that the HPCF and RCIC Systems will automatically restart on an RPV low water level (Levels 1.5 and 2, respectively) signal received subsequent to an RPV high water level (Level 8) trip and that the suction is automatically transferred from the CST to the suppression pool. SRs in LCO 3.3.1.1 and LCO 3.3.1.4 overlap this Surveillance to provide complete testing of the assumed safety function.

The 18 month Frequency is based on the need to perform this Surveillance under the conditions that apply during a plant outage and the potential for an unplanned transient if the Surveillance were performed with the reactor at power. Operating experience has shown that these components usually pass the SR when performed at the 18 month Frequency, which is based on the refueling cycle. Therefore, the Frequency was concluded to be acceptable from a reliability standpoint.

This SR is modified by a Note that excludes vessel injection during the Surveillance. Since all active components are testable and full flow can

BASES

SURVEILLANCE REQUIREMENTS (continued)

SR 3.5.1.7 (continued)

be demonstrated by recirculation through the test line, coolant injection into the RPV is not required during the Surveillance.

SR 3.5.1.8

The ADS designated S/RVs are required to actuate automatically upon receipt of specific initiation signals. A system functional test is performed to demonstrate that the mechanical portions of the ADS function (i.e., solenoids) operate as designed when initiated either by an actual or simulated initiation signal, causing proper actuation of all the required components. SR 3.5.1.9 and SRs in LCO 3.3.1.1 and LCO 3.3.1.4 overlap this Surveillance to provide complete testing of the assumed safety function.

The 18 month Frequency is based on the need to perform this Surveillance under the conditions that apply during a plant outage and the potential for an unplanned transient if the Surveillance were performed with the reactor at power. Operating experience has shown that these components usually pass the SR when performed at the 18 month Frequency, which is based on the refueling cycle. Therefore, the Frequency was concluded to be acceptable from a reliability standpoint.

This SR is modified by a Note that excludes valve actuation. This prevents an RPV pressure blowdown.

SR 3.5.1.9

A manual actuation of each ADS valve is performed to verify that the valve and solenoids are functioning properly and that no blockage exists in the S/RV discharge lines. This is demonstrated by the response of the turbine control or bypass valve, by a change in the measured steam flow, or by any other method suitable to verify steam flow. Adequate reactor steam dome pressure must be available to perform this test to avoid damaging the valve. Sufficient time is therefore allowed, after the required pressure is achieved, to perform this test. Adequate pressure at which this test is to be performed is 6.55 MPaG (the pressure recommended by the valve manufacturer). Reactor startup is allowed prior to performing this test because valve OPERABILITY and the setpoints for overpressure protection are verified, per ASME requirements, prior to valve installation. Therefore, this SR is modified by a Note that states the Surveillance is not required to be performed until

BASES

SURVEILLANCE REQUIREMENTS (continued)

SR 3.5.1.9 (continued)

12 hours after reactor steam dome pressure is ≥ 6.55 MPaG. SR 3.5.1.8 and SRs in LCO 3.3.1.1 and LCO 3.3.1.4 overlap this Surveillance to provide complete testing of the assumed safety function.

The Frequency is based on the need to perform this Surveillance under the conditions that apply during a plant outage and the potential for an unplanned transient if the Surveillance were performed with the reactor at power. Operating experience has shown that these components usually pass the SR when performed at the 18 month Frequency, which is based on the refueling cycle. Therefore, the Frequency was concluded to be acceptable from a reliability standpoint.

REFERENCES

1. DCD Tier 2, Section 6.3.2.
2. DCD Tier 2, Section 15.6.4.
3. DCD Tier 2, Section 15.6.5.
4. DCD Tier 2, Section 15.6.6.
5. 10 CFR 50, Appendix K.
6. DCD Tier 2, Section 6.3.3.
7. 10 CFR 50.46.
8. DCD Tier 2, Section 6.3.3.9.
9. DCD Tier 2, Section 19D.9.
10. DCD Tier 2, Section 7.3.1.1.1.2.
11. 10 CFR 50, Appendix A, GDC 33.
12. DCD Tier 2, Section 6.7.
13. DCD Tier 2, Section 9.5.11.
14. DCD Tier 2, Section 5.4.7.1.1.10.
15. Letter, Jack Fox to Chet Poslusny, “Submittal Supporting Accelerated ABWR Review Schedule - ABWR CDF Sensitivity to ESF Equipment Out of Service”, Docket No. STN 52-001, July 27, 1993.

B 3.5 EMERGENCY CORE COOLING SYSTEMS (ECCS)

B 3.5.2 ECCS – Shutdown

BASES

BACKGROUND	A description of the High Pressure Core Flooder (HPCF) and the Low Pressure Flooder (LPFL) subsystems of the Residual Heat Removal (RHR) System is provided in the Bases for LCO 3.5.1, “ECCS-Operating.” The Reactor Core Isolation Cooling (RCIC) system steam driven turbine can not operate with the reactor shutdown and so is not available.
APPLICABLE SAFETY ANALYSES	ECCS performance is evaluated for the entire spectrum of break sizes for a postulated loss of coolant accident (LOCA). The long term cooling analysis following a design basis LOCA (Ref. 3.5.2-1) demonstrates that only one motor driven ECCS injection subsystem is required, post LOCA, to maintain the peak cladding temperature below the allowable limit. To provide redundancy, a minimum of two ECCS subsystems are required to be OPERABLE in MODES 4 and 5. Two OPERABLE ECCS injection subsystems also ensure adequate inventory makeup in the reactor pressure vessel (RPV) in the event of an inadvertent vessel draindown. The ECCS satisfy Criterion 3 of the NRC Policy Statement.
LCO	Two ECCS injection subsystems are required to be OPERABLE. The ECCS injection subsystems are defined as the three LPFL and the two HPCF subsystems. Each LPFL subsystem consists of one motor driven pump, piping, and valves to transfer water from the suppression pool to the RPV. Each HPCF subsystem consists of one motor driven pump, piping, and valves to transfer water from the suppression pool or condensate storage tank (CST) to the RPV. Any LPFL subsystem may be aligned for the shutdown cooling mode of the decay heat removal system in MODE 4 or 5 and considered OPERABLE for the ECCS function, if it can be manually realigned (remote or local) to the LPFL mode and is not otherwise inoperable. Because of low pressure and low temperature conditions in MODES 4 and 5, sufficient time will be available to manually align and initiate LPFL subsystem operation to provide core cooling prior to postulated fuel uncovery.

BASES

APPLICABILITY

OPERABILITY of the ECCS injection subsystems is required in MODES 4 and 5 to ensure adequate coolant inventory and sufficient heat removal capability for the irradiated fuel in the core in case of an inadvertent draindown of the vessel. Requirements for ECCS OPERABILITY during MODES 1, 2, and 3 are discussed in the Applicability section of the Bases for LCO 3.5.1. ECCS subsystems are not required to be OPERABLE during MODE 5 with the reactor cavity to dryer/separator storage pool gate removed, and the water level maintained at ≥ 7m above the RPV flange. This provides sufficient coolant inventory to allow operator action to terminate the inventory loss prior to fuel uncovery in case of an inadvertent draindown. In addition, the automatic isolations of RHR shutdown cooling and the reactor water cleanup system on low RPV water level are required to be OPERABLE (LCO 3.3.1.1, SSLC Sensor Instrumentation) during CORE ALTERATIONS or operation with a potential for draining the reactor vessel.

The Automatic Depressurization System is not required to be OPERABLE during MODES 4 and 5 because the RPV pressure is < 0.343 MPaG, and the LPFL and HPCF subsystems can provide core cooling without any depressurization of the primary system.

Because the Reactor Core Isolation Cooling (RCIC) system requires steam to operate, it is not required to be OPERABLE during MODES 4 and 5.

ACTIONS

A.1 and B.1

If any one required ECCS injection subsystem is inoperable, the required inoperable ECCS injection subsystem must be restored to OPERABLE status within 4 hours. In this Condition, the remaining OPERABLE subsystem can provide sufficient RPV flooding capability to recover from an inadvertent vessel draindown. However, overall system reliability is reduced because a single failure in the remaining OPERABLE subsystem concurrent with a vessel draindown could result in the ECCS not being able to perform its intended function. The 4 hour Completion Time for restoring the required ECCS injection subsystem to OPERABLE status is based on engineering judgment that considered the availability of one subsystem and the low probability of a vessel draindown event.

With the inoperable subsystem not restored to OPERABLE status within the required Completion Time, action must be initiated immediately to suspend operations with a potential for draining the reactor vessel (OPDRVs) to minimize the probability of a vessel draindown and the subsequent potential for fission product release. Actions must continue until OPDRVs are suspended.

BASES

ACTIONS (continued)

C.1, C.2, D.1, D.2, and D.3

If both of the required ECCS injection subsystems are inoperable, all coolant inventory makeup capability may be unavailable. Therefore, actions must be initiated immediately to suspend OPDRVs in order to minimize the probability of a vessel draindown and the subsequent potential for fission product release. Actions must continue until OPDRVs are suspended. One ECCS injection subsystem must also be restored to OPERABLE status within 4 hours.

If at least one ECCS injection subsystem is not restored to OPERABLE status within the 4 hour Completion Time, additional actions are required to minimize any potential fission product release to the environment. This includes initiating immediate action to restore the following to OPERABLE status: secondary containment, one standby gas treatment subsystem, and one isolation valve and associated instrumentation in each secondary containment penetration flow path not isolated. This may be performed by an administrative check, by examining logs or other information, to determine if the components are out of service for maintenance or other reasons. Verification does not require performing the Surveillances needed to demonstrate OPERABILITY of the components. If, however, any required component is inoperable, then it must be restored to OPERABLE status. In this case, the Surveillances may need to be performed to restore the component to OPERABLE status. Actions must continue until all required components are OPERABLE.

The 4 hour Completion Time to restore at least one ECCS injection subsystem to OPERABLE status ensures that prompt action will be taken to provide the required cooling capacity or to initiate actions to place the plant in a condition that minimizes any potential fission product release to the environment.

SURVEILLANCE REQUIREMENTS

SR 3.5.2.1 and SR 3.5.2.2

The minimum water level of 7 m required for the suppression pool is periodically verified to ensure that the suppression pool will provide adequate net positive suction head (NPSH) for the ECCS pumps, recirculation volume, and vortex prevention. With the suppression pool water level less than the required limit, all ECCS injection subsystems are inoperable.

BASES

SURVEILLANCE REQUIREMENTS (continued)

SR 3.5.2.1 and SR 3.5.2.2 (continued)

When the suppression pool level is < 7 m, the HPCF is considered OPERABLE only if it can take suction from the CST and the CST water level is sufficient to provide the required NPSH for the HPCF pump. Therefore, a verification that either the suppression pool water level is ≥ 7 m or the HPCF System is aligned to take suction from the CST and the CST contains ≥ 700,000 liters of water, equivalent to 5.4 m, ensures that the HPCF System can supply makeup water to the RPV.

The 12 hour Frequency of these SRs was developed considering operating experience related to suppression pool and CST water level variations and instrument drift during the applicable MODES. Furthermore, the 12 hour Frequency is considered adequate in view of other indications in the control room, including alarms, to alert the operator to an abnormal suppression pool or CST water level condition.

SR 3.5.2.3, SR 3.5.2.5, and SR 3.5.2.6

The Bases provided for SR 3.5.1.1, SR 3.5.1.4, and SR 3.5.1.7 are applicable to SR 3.5.2.3, SR 3.5.2.5, and SR 3.5.2.6, respectively.

SR 3.5.2.4

Verifying the correct alignment for manual, power operated, and automatic valves in the ECCS flow paths provides assurance that the proper flow paths will exist for ECCS operation. This SR does not apply to valves that are locked, sealed, or otherwise secured in position since these valves were verified to be in the correct position prior to locking, sealing, or securing. A valve that receives an initiation signal is allowed to be in a nonaccident position provided the valve will automatically reposition in the proper stroke time. This SR does not require any testing or valve manipulation; rather, it involves verification that those valves capable of potentially being mispositioned are in the correct position. This SR does not apply to valves that cannot be inadvertently misaligned, such as check valves. The 31 day Frequency is appropriate because the valves are operated under procedural control and the probability of their being mispositioned during this time period is low.

BASES

SURVEILLANCE REQUIREMENTS (continued)

SR 3.5.2.4 (continued)

In MODES 4 and 5, the RHR System may operate in the shutdown cooling mode to remove decay heat and sensible heat from the reactor. Therefore, RHR valves that are required for LPFL subsystem operation may be aligned for the shutdown cooling mode. Therefore, this SR is modified by a Note that allows one LPFL subsystem of the RHR System to be considered OPERABLE for the ECCS function if all the required valves in the LPFL flow path can be manually realigned (remote or local) to allow injection into the RPV and the system is not otherwise inoperable. This will ensure adequate core cooling if an inadvertent vessel draindown should occur.

REFERENCES

1. DCD Tier 2, Section 6.3.

B 3.6 CONTAINMENT SYSTEMS

B 3.6.1.1 Primary Containment

BASES

BACKGROUND

The function of the primary containment is to isolate and contain fission products released from the Reactor Primary System following a Design Basis Accident (DBA) and to confine the postulated release of radioactive material. The primary containment consists of a steel lined, reinforced concrete vessel, which surrounds the Reactor Primary System and provides an essentially leak tight barrier against an uncontrolled release of radioactive material to the environment.

The isolation devices for the penetrations in the primary containment boundary are a part of the containment leak tight barrier. To maintain this leak tight barrier:

a. All penetrations required to be closed during accident conditions are either:

   1. capable of being closed by an OPERABLE automatic Containment Isolation System, or

   2. closed by manual valves, blind flanges, or de-activated automatic valves secured in their closed positions, except as provided in LCO 3.6.1.3, “Primary Containment Isolation Valves (PCIVs)”;

b. The primary containment air locks are OPERABLE, except as provided in LCO 3.6.1.2, “Primary Containment Air Locks”;

c. The sealing mechanism associated with a penetration (e.g., welds, bellows, or o-rings) is OPERABLE.

This Specification ensures that the performance of the primary containment, in the event of a DBA, meets the assumptions used in the safety analyses of References 1 and 2. SR 3.6.1.1.1 leakage rate requirements are in conformance with 10 CFR 50, Appendix J (Ref. 3), as modified by approved exemptions.

BASES

APPLICABLE SAFETY ANALYSES

The safety design basis for the primary containment is that it must withstand the pressures and temperatures of the limiting DBA without exceeding the design leakage rate.

The DBA that postulates the maximum release of radioactive material within primary containment is a LOCA. In the analysis of this accident, it is assumed that primary containment is OPERABLE such that release of fission products to the environment is controlled by the rate of primary containment leakage.

Analytical methods and assumptions involving the primary containment are presented in References 1 and 2. The safety analyses assume a nonmechanistic fission product release following a DBA, which forms the basis for determination of offsite doses. The fission product release is, in turn, based on an assumed leakage rate from the primary containment. OPERABILITY of the primary containment ensures that the leakage rate assumed in the safety analyses is not exceeded.

The maximum allowable leakage rate for the primary containment (L_a) is 0.5% by weight of the containment air per 24 hours at the calculated peak containment pressure (P_a) of 281.8 kPaG or 0.257% by weight of the containment air per 24 hours at the reduced pressure of Pt of 144.8 kPaG (Ref. 1).

Primary containment satisfies Criterion 3 of the NRC Policy Statement.

LCO

Primary containment OPERABILITY is maintained by limiting leakage to within the acceptance criteria of 10 CFR 50, Appendix J (Ref. 3). Compliance with this LCO will ensure a primary containment configuration, including equipment hatches, that is structurally sound and that will limit leakage to those leakage rates assumed in the safety analyses. Individual leakage rates specified for the primary containment air lock are addressed in LCO 3.6.1.2.

APPLICABILITY

In MODES 1, 2, and 3, a DBA could cause a release of radioactive material to primary containment. In MODES 4 and 5, the probability and consequences of these events are reduced due to the pressure and temperature limitations of these MODES. Therefore, primary containment is not required to be OPERABLE in MODES 4 and 5 to prevent leakage of radioactive material from primary containment.

BASES

ACTIONS

A.1

In the event primary containment is inoperable, primary containment must be restored to OPERABLE status within 1 hour. The 1 hour Completion Time provides a period of time to correct the problem commensurate with the importance of maintaining primary containment OPERABILITY during MODES 1, 2, and 3. This time period also ensures that the probability of an accident (requiring primary containment OPERABILITY) occurring during periods where primary containment is inoperable is minimal.

B.1 and B.2

If primary containment cannot be restored to OPERABLE status within the required Completion Time, the plant must be brought to a MODE in which the LCO does not apply. To achieve this status, the plant must be brought to at least MODE 3 within 12 hours and to MODE 4 within 36 hours. The allowed Completion Times are reasonable, based on operating experience, to reach the required plant conditions from full power conditions in an orderly manner and without challenging plant systems.

SURVEILLANCE REQUIREMENTS

SR 3.6.1.1.1

Maintaining the primary containment OPERABLE requires compliance with the visual examinations and leakage rate test requirements of 10 CFR 50, Appendix J (Ref. 3), as modified by approved exemptions. Failure to meet air lock leakage testing (SR 3.6.1.2.1), resilient seal primary containment purge valve leakage testing (SR 3.6.1.3.6), or hydrostatically tested valve leakage (SR 3.6.1.3.11) does not necessarily result in a failure of this SR. The impact of the failure to meet these SRs must be evaluated against the Type A, B, and C acceptance criteria of 10 CFR 50, Appendix J. The Frequency is required by 10 CFR 50, Appendix J (Ref. 3), as modified by approved exemptions. Thus, SR 3.0.2 (which allows Frequency extensions) does not apply.

BASES

SURVEILLANCE REQUIREMENTS (continued)

SR 3.6.1.1.2

Maintaining the pressure suppression function of primary containment requires limiting the leakage from the drywell to the wetwell. Thus, if an event were to occur that pressurized the drywell, the steam would be directed through the horizontal vents into the suppression pool. This SR measures drywell to wetwell differential pressure during a 15 minute period to ensure that the leakage paths that would bypass the suppression pool are within allowable limits.

Satisfactory performance of this SR can be achieved by establishing a known differential pressure between the drywell and the wetwell and verifying that the pressure in either the wetwell or the drywell does not change by more than 12 mm of water per minute over a 15 minute period. The leakage test is performed every 18 months. The 18 month Frequency was developed considering it is prudent that this Surveillance be performed during a unit outage and also in view of the fact that component failures that might have affected this test are identified by other primary containment SRs. Two consecutive test failures, however, would indicate unexpected primary containment degradation; in this event, as the Note indicates, increasing the Frequency to once every 9 months is required until the situation is remedied as evidenced by passing two consecutive tests.

REFERENCES

1. DCD Tier 2, Section 6.2.

2. DCD Tier 2, Section 15.6.

3. 10 CFR 50, Appendix J.

B 3.6 CONTAINMENT SYSTEMS

B 3.6.1.2 Primary Containment Air Locks

BASES

BACKGROUND

Two double door primary containment air locks have been built into the primary containment to provide personnel access to the drywell and to provide primary containment isolation during the process of personnel entering and exiting the drywell. The air locks are designed to withstand the same loads, temperatures, and peak design internal and external pressures as the primary containment (Ref. 1). As part of the primary containment, the air locks limit the release of radioactive material to the environment during normal unit operation and through a range of transients and accidents up to and including postulated Design Basis Accidents (DBAs).

Each air lock door has been designed and tested to certify its ability to withstand a pressure in excess of the maximum expected pressure following a DBA in primary containment. Each of the doors contains double gasketed seals and local leakage rate testing capability to ensure pressure integrity. To effect a leak tight seal, the air lock design uses pressure seated doors (i.e., an increase in primary containment internal pressure results in increased sealing force on each door.)

Each air lock is nominally a right circular cylinder with doors at each end that are interlocked to prevent simultaneous opening. The air locks are provided with limit switches on both doors in each air lock that provide control room indication of door position. Additionally, control room indication is provided to alert the operator whenever an air lock interlock mechanism is defeated. During periods when primary containment is not required to be OPERABLE, the air lock interlock mechanism may be disabled, allowing both doors of an air lock to remain open for extended periods when frequent primary containment entry is necessary. Under some conditions, as allowed by this LCO, the primary containment may be accessed through the air lock when the door interlock mechanism has failed, by manually performing the interlock function.

The primary containment air locks form part of the primary containment pressure boundary. As such, air lock integrity and leak tightness are essential for maintaining primary containment leakage rate to within limits in the event of a DBA. Not maintaining air lock integrity or leak tightness may result in a leakage rate in excess of that assumed in the unit safety analysis. SR 3.6.1.2.1 leakage rate requirements conform with 10 CFR 50, Appendix J (Ref. 2), as modified by approved exemptions.

BASES

APPLICABLE SAFETY ANALYSES

The DBA that postulates the maximum release of radioactive material within primary containment is a LOCA. In the analysis of this accident, it is assumed that primary containment is OPERABLE, such that release of fission products to the environment is controlled by the rate of primary containment leakage. The primary containment is designed with a maximum allowable leakage rate (L_a) of 0.5%(excluding MSIV leakage) by weight of the containment air per 24 hours at the calculated maximum peak containment pressure (P_a) of 240 kPaG (Ref. 3). This allowable leakage rate forms the basis for the acceptance criteria imposed on the SRs associated with the air lock.

Primary containment air lock OPERABILITY is also required to minimize the amount of fission product gases that may escape primary containment through the air lock and contaminate and pressurize the secondary containment.

The primary containment air lock satisfies Criterion 3 of the NRC Policy Statement.

LCO

As part of the primary containment, the air lock's safety function is related to control of containment leakage rates following a DBA. Thus, the air lock's structural integrity and leak tightness are essential to the successful mitigation of such an event.

The primary containment air locks are required to be OPERABLE. For each air lock to be considered OPERABLE, the air lock interlock mechanism must be OPERABLE, the air lock must be in compliance with the Type B air lock leakage test, and both air lock doors must be OPERABLE. The interlock allows only one air lock door to be opened at a time. This provision ensures that a gross breach of primary containment does not exist when primary containment is required to be OPERABLE. Closure of a single door in each air lock is sufficient to provide a leak tight barrier following postulated events. Nevertheless, both doors are kept closed when the air lock is not being used for normal entry into and exit from primary containment.

APPLICABILITY

In MODES 1, 2, and 3, a DBA could cause a release of radioactive material to primary containment. In MODES 4 and 5, the probability and consequences of these events are reduced due to the pressure and temperature limitations of these MODES. Therefore, the primary containment air lock is not required to be OPERABLE in MODES 4 and 5 to prevent leakage of radioactive material from primary containment.

BASES

ACTIONS

The ACTIONS are modified by Note 1, which allows entry and exit to perform repairs of the affected air lock component. If the outer door is inoperable, then it may be easily accessed to repair. If the inner door is the one that is inoperable, however, then it is preferred that the air lock be accessed from inside primary containment by entering through the other OPERABLE air lock. If this is not practical, however, then it is permissible to enter the air lock through the OPERABLE outer door, which means there is a short time during which the primary containment boundary is not intact (during access through the outer door). The ability to open the OPERABLE door, even if it means the primary containment boundary is temporarily not intact, is acceptable due to the low probability of an event that could pressurize the primary containment during the short time in which the OPERABLE door is expected to be open. The OPERABLE door must be immediately closed after each entry and exit.

Note 2 has been included to provide clarification that, for this LCO, separate Condition entry is allowed for each air lock.

The ACTIONS are modified by a third Note, which ensures appropriate remedial measures are taken when necessary. Pursuant to LCO 3.0.6, actions are not required, even if primary containment is exceeding its leakage limit. Therefore, the Note is added to require ACTIONS for LCO 3.6.1.1, “Primary Containment,” to be taken in this event.

A.1, A.2, and A.3

With one primary containment air lock door inoperable in one or more primary containment air locks, the OPERABLE door must be verified closed (Required Action A.1) in each affected air lock. This ensures that a leak tight primary containment barrier is maintained by the use of an OPERABLE air lock door. This action must be completed within 1 hour. The 1 hour Completion Time is consistent with the ACTIONS of LCO 3.6.1.1, which requires that primary containment be restored to OPERABLE status within 1 hour.

In addition, the affected air lock penetration must be isolated by locking closed the OPERABLE air lock door within the 24 hour Completion Time. The 24 hour Completion Time is considered reasonable for locking the OPERABLE air lock door, considering that the OPERABLE door of the affected air locks are being maintained closed.

BASES

ACTIONS (continued)

A.1, A.2, and A.3 (continued)

Required Action A.3 ensures that the affected air locks with an inoperable door has been isolated by the use of a locked closed OPERABLE air lock door. This ensures that an acceptable primary containment leakage boundary is maintained. The Completion Time of once per 31 days is based on engineering judgment and is considered adequate in view of the low likelihood of a locked door being mispositioned and other administrative controls.

Required Action A.3 is modified by a Note that applies to air lock doors located in high radiation areas or areas with limited access due to inerting and allows these doors to be verified locked closed by use of administrative controls. Allowing verification by administrative controls is considered acceptable, since access to these areas is typically restricted. Therefore, the probability of misalignment of the door, once it has been verified to be in the proper position, is small.

The Required Actions have been modified by two Notes. Note 1 ensures that only the Required Actions and associated Completion Times of Condition C are required if both doors in the air lock are inoperable. With both doors in the air lock inoperable, an OPERABLE door is not available to be closed. Required Actions C.1 and C.2 are the appropriate remedial actions. Note 2 allows use of the air lock for entry and exit for 7 days under administrative controls.

Primary containment entry may be required to perform Technical Specifications (TS) Surveillances and Required Actions, as well as other activities on equipment inside primary containment that are required by TS or activities on equipment that support TS-required equipment. This Note is not intended to preclude performing other activities (i.e., non-TS-related activities) if the primary containment was entered, using the inoperable air lock, to perform an allowed activity listed above. This allowance is acceptable due to the low probability of an event that could pressurize the primary containment during the short time that the OPERABLE door is expected to be open.

BASES

ACTIONS (continued)

B.1, B.2, and B.3

With an air lock interlock mechanism inoperable in one or both primary containment air locks, the Required Actions and associated Completion Times are consistent with those specified in Condition A.

The Required Actions have been modified by two Notes. Note 1 ensures that only the Required Actions and associated Completion Times of Condition C are required if both doors in one air lock are inoperable. With both doors in the air lock inoperable, an OPERABLE door is not available to be closed. Required Actions C.1 and C.2 are the appropriate remedial actions. Note 2 allows entry into and exit from the primary containment under the control of a dedicated individual stationed at the air lock to ensure that only one door is opened at a time (i.e., the individual performs the function of the interlock).

Required Action B.3 is modified by a Note that applies to air lock doors located in high radiation areas or areas with limited access due to inerting and that allows these doors to be verified locked closed by use of administrative controls. Allowing verification by administrative controls is considered acceptable, since access to these areas is typically restricted. Therefore, the probability of misalignment of the door, once it has been verified to be in the proper position, is small.

C.1, C.2, and C.3

With one or more air locks inoperable for reasons other than those described in Condition A or B, Required Action C.1 requires action to be immediately initiated to evaluate containment overall leakage rates using current air lock leakage test results. An evaluation is acceptable since it is overly conservative to immediately declare the primary containment inoperable if both doors in an air lock have failed a seal test or if the overall air lock leakage is not within limits. In many instances (e.g., only one seal per door has failed) primary containment remains OPERABLE, yet only 1 hour (according to LCO 3.6.1.1) would be provided to restore the air lock door to OPERABLE status prior to requiring a plant shutdown. In addition, even with both doors failing the seal test, the overall containment leakage rate can still be within limits.

Required Action C.2 requires that one door in the affected primary containment air locks must be verified closed. This action must be completed within the 1 hour Completion Time. This specified time period is consistent with the ACTIONS of LCO 3.6.1.1, which require that primary containment be restored to OPERABLE status within 1 hour.

BASES

ACTIONS (continued)

C.1, C.2, and C.3 (continued)

Additionally, the air lock must be restored to OPERABLE status within 24 hours. The 24 hour Completion Time is reasonable for restoring an inoperable air lock to OPERABLE status considering that at least one door is maintained closed in each affected air lock.

D.1 and D.2

If the inoperable primary containment air lock cannot be restored to OPERABLE status within the associated Completion Time, the plant must be brought to a MODE in which the LCO does not apply. To achieve this status, the plant must be brought to at least MODE 3 within 12 hours and to MODE 4 within 36 hours. The allowed Completion Times are reasonable, based on operating experience, to reach the required plant conditions from full power conditions in an orderly manner and without challenging plant systems.

SURVEILLANCE REQUIREMENTS

SR 3.6.1.2.1

Maintaining primary containment air locks OPERABLE requires compliance with the leakage rate test requirements of 10 CFR 50, Appendix J (Ref. 2), as modified by approved exemptions. This SR reflects the leakage rate testing requirements with respect to air lock leakage (Type B leakage tests). The acceptance criteria were established during initial air lock and primary containment OPERABILITY testing. The periodic testing requirements verify that the air lock leakage does not exceed the allowed fraction of the overall primary containment leakage rate. The Frequency is required by 10 CFR 50, Appendix J (Ref. 2), as modified by approved exemptions. Thus, SR 3.0.2 (which allows Frequency extensions) does not apply.

The SR has been modified by two Notes. Note 1 states that an inoperable air lock door does not invalidate the previous successful performance of the overall air lock leakage test. This is considered reasonable since either air lock door is capable of providing a fission product barrier in the event of a DBA. Note 2 has been added to this SR, requiring the results to be evaluated against the acceptance criteria of SR 3.6.1.1.1. This ensures that air lock leakage is properly accounted for in determining the overall primary containment leakage rate.

BASES

SURVEILLANCE REQUIREMENTS (continued)

SR 3.6.1.2.2

The air lock interlock mechanism is designed to prevent simultaneous opening of both doors in the air lock. Since both the inner and outer doors of an air lock are designed to withstand the maximum expected post accident primary containment pressure, closure of either door will support primary containment OPERABILITY. Thus, the interlock feature supports primary containment OPERABILITY while the air lock is being used for personnel transit in and out of the containment. Periodic testing of this interlock demonstrates that the interlock will function as designed and that simultaneous inner and outer door opening will not inadvertently occur. Due to the purely mechanical nature of this interlock, and given that the interlock mechanism is only challenged when primary containment is entered, this test is only required to be performed upon entering primary containment, but is not required more frequently than 184 days when primary containment is de-inerted. The 184 day Frequency is based on engineering judgment and is considered adequate in view of other administrative controls such as indications of interlock mechanism status, available to operations personnel.

REFERENCES

1. DCD Tier 2, Section 3.8.2.
2. 10 CFR 50, Appendix J.
3. DCD Tier 2, Section 6.2.

B 3.6 CONTAINMENT SYSTEMS

B 3.6.1.3 Primary Containment Isolation Valves (PCIVs)

BASES

BACKGROUND

The function of the PCIVs, in combination with other accident mitigation systems, is to limit fission product release during and following postulated Design Basis Accidents (DBAs) to within limits. Primary containment isolation within the time limits specified for those isolation valves designed to close automatically ensures that the release of radioactive material to the environment will be consistent with the assumptions used in the analyses for a DBA.

The OPERABILITY requirements for PCIVs help ensure that adequate primary containment leak tightness is maintained during and after an accident by minimizing potential leakage paths to the environment. Therefore, the OPERABILITY requirements provide assurance that primary containment leakage rates assumed in the safety analyses will not be exceeded. These isolation devices are either passive or active (automatic). Manual valves, de-activated automatic valves secured in their closed position (including check valves with flow through the valve secured), blind flanges, and closed systems are considered passive devices. Check valves, or other automatic valves designed to close without operator action following an accident, are considered active devices. Two barriers in series are provided for each penetration so that no single credible failure or malfunction of an active component can result in a loss of isolation or leakage that exceeds limits assumed in the safety analyses. One of these barriers may be a closed system.

The primary containment purge lines are 550 mm in diameter; vent lines are 550 mm in diameter. The 550 mm primary containment purge valves are normally maintained closed in MODES 1, 2, and 3 to ensure leak tightness. The isolation valve on the 550 mm vent line from the drywell has a 50 mm bypass line around it for use during normal reactor operation. The PCIVs will close before fuel failure and prevent high pressure from reaching the SGT System filter trains in the unlikely event of a loss of coolant accident (LOCA) during venting.

APPLICABLE SAFETY ANALYSES

The PCIVs LCO was derived from the requirements related to the control of leakage from the primary containment during major accidents. This LCO is intended to ensure that primary containment leakage rates do not exceed the values assumed in the safety analyses. As part of the primary containment boundary, PCIV OPERABILITY supports leak tightness of primary containment. Therefore, the safety analysis of any event requiring isolation of primary containment is applicable to this LCO.

BASES

APPLICABLE SAFETY ANALYSES (continued)

The DBAs that result in a release of radioactive material within primary containment are a LOCA and a main steam line break (MSLB). In the analysis for each of these accidents, it is assumed that PCIVs are either closed or close within the required isolation times following event initiation. This ensures that potential leakage paths to the environment through PCIVs (and primary containment purge valves) are minimized. Of the events analyzed in Reference 1, the MSLB is the most limiting event due to radiological consequences. The closure time of the main steam isolation valves (MSIVs) is the most significant variable from a radiological standpoint. The MSIVs are required to close within 3 to 4.5 seconds; therefore, the 4.5 second closure time is assumed in the analysis. The safety analyses does not make any explicit assumptions concerning the purge valves at event initiation. Likewise, it is assumed that the primary containment is isolated such that release of fission products to the environment is controlled by the rate of primary containment leakage.

The single failure criterion required to be imposed in the conduct of unit safety analyses was considered in the original design of the primary containment purge valves. Two valves in series on each purge line provide assurance that both the supply and exhaust lines could be isolated even if a single failure occurred.

PCIVs satisfy Criterion 3 of the NRC Policy Statement.

LCO

PCIVs form a part of the primary containment boundary. The PCIV safety function is related to control of primary containment leakage rates during a DBA.

The power operated, automatic isolation valves are required to have isolation times within limits and actuate on an automatic isolation signal. The 550 mm purge valves must be blocked to prevent full opening. The valves covered by this LCO are listed with their associated stroke times in Reference 2.

The normally closed isolation valves are considered OPERABLE when manual valves are closed, automatic valves are de-activated and secured in their closed position, blind flanges are in place, and closed systems are intact. These passive isolation valves and devices are those listed in Reference 2. Purge valves with resilient seals, MSIVs, and hydrostatically tested valves must meet additional leakage rate requirements. Other PCIV leakage rates are addressed by LCO 3.6.1.1, “Primary Containment,” as Type C testing.

BASES

LCO (continued)

This LCO provides assurance that the PCIVs will perform their designed safety functions to control leakage from the primary containment during accidents.

APPLICABILITY

In MODES 1, 2, and 3, a DBA could cause a release of radioactive material to primary containment. In MODES 4 and 5, the probability and consequences of these events are reduced due to the pressure and temperature limitations of these MODES. Therefore, most PCIVs are not required to be OPERABLE and the primary containment purge valves are not required to be closed in MODES 4 and 5. Certain valves, however, are required to be OPERABLE to prevent inadvertent reactor vessel draindown. These valves are those whose associated instrumentation is required to be OPERABLE per LCO 3.3.1.1, “SSLC Sensor Instrumentation,” and LCO 3.3.1.4, “ESF Actuation Instrumentation.” (This does not include the valves that isolate the associated instrumentation.)

ACTIONS

The ACTIONS are modified by a Note allowing penetration flow path(s) except for the purge valve flow path(s) to be unisolated intermittently under administrative controls. These controls consist of stationing a dedicated operator at the controls of the valve, who is in continuous communication with the control room. In this way, the penetration can be rapidly isolated when a need for primary containment isolation is indicated.

A second Note has been added to provide clarification that, for the purpose of this LCO, separate Condition entry is allowed for each penetration flow path.

The ACTIONS are modified by a third Note, which ensures that appropriate remedial actions are taken, if necessary, if the affected system(s) are rendered inoperable by an inoperable PCIV (e.g., an Emergency Core Cooling Systems subsystem is inoperable due to a failed open test return valve).

Note 4 ensures appropriate remedial actions are taken when the primary containment leakage limits are exceeded. Pursuant to LCO 3.0.6, these actions are not required even when the associated LCO is not met. Therefore, Notes 3 and 4 are added to require that the proper actions are taken.

BASES

ACTIONS (continued)

A.1 and A.2

With one or more penetration flow paths with one PCIV inoperable except for purge valve leakage, main steam isolation valve leakage, or hydrostatically tested line leakage not within limit, the affected penetration flow paths must be isolated. The method of isolation must include the use of at least one isolation barrier that cannot be adversely affected by a single active failure. Isolation barriers that meet this criterion are a closed and de-activated automatic valve, a closed manual valve, a blind flange, and a check valve with flow through the valve secured. For penetration isolated in accordance with Required Action A.1, the valve used to isolate the penetration should be the closest available valve to the primary containment. The Required Action must be completed within the 4 hour Completion Time (8 hours for main steam lines). The Completion Time of 4 hours is reasonable considering the time required to isolate the penetration and the relative importance of supporting primary containment OPERABILITY during MODES 1, 2, and 3. For main steam lines, an 8 hour Completion Time is allowed. The Completion Time of 8 hours for the main steam lines allows a period of time to restore the MSIVs to OPERABLE status given the fact that MSIV closure will result in isolation of the main steam line(s) and a potential for plant shutdown.

For affected penetrations that have been isolated in accordance with Required Action A.1, the affected penetration flow path(s) must be verified to be isolated on a periodic basis. This is necessary to ensure that primary containment penetrations required to be isolated following an accident, and no longer capable of being automatically isolated, will be in the isolation position should an event occur. This Required Action does not require any testing or valve manipulation. Rather, it involves verification, through a system walkdown, that those valves outside containment and capable of potentially being mispositioned are in the correct position. The Completion Time of “once per 31 days for isolation devices outside primary containment, drywell, and steam tunnel” is appropriate because the valves are operated under administrative controls and the probability of their misalignment is low. For valves inside primary containment, the time period specified “prior to entering MODE 2 or 3 from MODE 4, if primary containment was de-inerted while in MODE 4, if not performed within the previous 92 days” is based on engineering judgment and is considered reasonable in view of the inaccessibility of the valves and other administrative controls ensuring that valve misalignment is an unlikely possibility.

Condition A is modified by a Note indicating that this Condition is only applicable to those penetration flow paths with two PCIVs. For penetration flow paths with one PCIV, Condition C provides the appropriate Required Actions.

BASES

ACTIONS (continued)

A.1 and A.2 (continued)

Required Action A.2 is modified by a Note that applies to valves and blind flanges located in high radiation areas, and allows them to be verified by use of administrative means. Allowing verification by administrative means is considered acceptable, since access to these areas is typically restricted. Therefore, the probability of misalignment of these valves, once they have been verified to be in the proper position, is low.

B.1

With one or more penetration flow paths with two PCIVs inoperable except for purge valve leakage, main steam isolation valve leakage, or hydrostatically tested line leakage, either the inoperable PCIVs must be restored to OPERABLE status or the affected penetration flow path must be isolated within 1 hour. The method of isolation must include the use of at least one isolation barrier that cannot be adversely affected by a single active failure. Isolation barriers that meet this criterion are a closed and de-activated automatic valve, a closed manual valve, and a blind flange. The 1 hour Completion Time is consistent with the ACTIONS of LCO 3.6.1.1.

Condition B is modified by a Note indicating this Condition is only applicable to penetration flow paths with two PCIVs.

For penetration flow paths with one PCIV, Condition C provides the appropriate Required Actions.

C.1 and C.2

With one or more penetration flow paths with one PCIV inoperable, the inoperable valve must be restored to OPERABLE status or the affected penetration flow path must be isolated. The method of isolation must include the use of at least one isolation barrier that cannot be adversely affected by a single active failure. Isolation barriers that meet this criterion are a closed and de-activated automatic valve, a closed manual valve, and a blind flange. A check valve may not be used to isolate the affected penetration. Required Action C.1 must be completed within the 4 hour Completion Time. The Completion Time of 4 hours is reasonable considering the relative stability of the closed system (hence, reliability) to act as a penetration isolation boundary and the relative importance of supporting primary containment OPERABILITY during MODES 1, 2, and 3. The Completion Time of 12 hours is reasonable considering the

BASES

ACTIONS (continued)

C.1 and C.2 (continued)

instrument and the small pipe diameter of penetration (hence, reliability) to act as a penetration isolation boundary and the small pipe diameter of the affected penetrations. In the event the affected penetration flow path is isolated in accordance with Required Action C.1, the affected penetration must be verified to be isolated on a periodic basis. This is necessary to ensure that primary containment penetrations required to be isolated following an accident are isolated. The Completion Time of once per 31 days for verifying each affected penetration is isolated is appropriate because the valves are operated under administrative controls and the probability of their misalignment is low.

Condition C is modified by a Note indicating that this Condition is only applicable to penetration flow paths with only one PCIV. For penetration flow paths with two PCIVs, Conditions A and B provide the appropriate Required Actions.

Required Action C.2 is modified by a Note that applies to valves and blind flanges located in high radiation areas and allows them to be verified by use of administrative means. Allowing verification by administrative means is considered acceptable, since access to these areas is typically restricted. Therefore, the probability of misalignment of these valves, once they have been verified to be in the proper position, is low.

D.1

With purge valve leakage rate, main steam isolation valve leakage, or hydrostatically tested line leakage not within limit the assumptions of the safety analysis may not be met. Therefore, the leakage must be restored to within limit within 4 hours except for main steam line leakage and 8 hours for main steam line leakage. Restoration can be accomplished by isolating the penetration that caused the limit to be exceeded by use of one closed and de-activated automatic valve, closed manual valve, or blind flange. When a penetration is isolated, the leakage rate for the isolated penetration is assumed to be the actual pathway leakage through the isolation device. If two isolation devices are used to isolate the penetration, the leakage rate is assumed to be the lesser actual pathway leakage of the two devices. The 4 hour Completion Time is reasonable considering the time required to restore leakage by isolating the penetration and the relative importance of the leakage to the overall containment function. The Completion Time of 8 hours for MSIV leakage allows a period of time to restore the MSIV leakage and is acceptable given the fact that MSIV closure will result in isolation of the main steam line(s) and a potential for plant shutdown.

BASES

ACTIONS (continued)

E.1 and E.2

If any Required Action and associated Completion Time cannot be met in MODE 1, 2, or 3, the plant must be brought to a MODE in which the LCO does not apply. To achieve this status, the plant must be brought to at least MODE 3 within 12 hours and to MODE 4 within 36 hours. The allowed Completion Times are reasonable, based on operating experience, to reach the required plant conditions from full power conditions in an orderly manner and without challenging plant systems.

F.1, G.1, H.1, and H.2

If any Required Action and associated Completion Time cannot be met, the unit must be placed in a condition in which the LCO does not apply. If applicable, CORE ALTERATIONS and movement of irradiated fuel assemblies must be immediately suspended. Suspension of these activities shall not preclude completion of movement of a component to a safe condition. Also, if applicable, action must be immediately initiated to suspend operations with a potential for draining the reactor vessel (OPDRVs) to minimize the probability of a vessel draindown and subsequent potential for fission product release. Actions must continue until OPDRVs are suspended and valve(s) are restored to OPERABLE status. If suspending an OPDRVs would result in closing the residual heat removal (RHR) shutdown cooling isolation valves, an alternative Required Action is provided to immediately initiate action to restore the valve(s) to OPERABLE status. This allows RHR to remain in service while actions are being taken to restore the valve.

SURVEILLANCE REQUIREMENTS

SR 3.6.1.3.1

This SR ensures that the primary containment purge valves are closed as required or, if open, open for an allowable reason.

The SR is also modified by a Note (Note 1), stating that primary containment purge valves are only required to be closed in MODES 1, 2, and 3. If a LOCA inside primary containment occurs in these MODES, the purge valves may not be capable of closing before the pressure pulse affects systems downstream of the purge valves, or the release of radioactive material will exceed limits prior to the purge valves closing. At other times when the purge valves are required to be capable of closing (e.g., during handling of irradiated fuel), pressurization concerns are not present and the purge valves are allowed to be open.

BASES

SURVEILLANCE REQUIREMENTS (continued)

SR 3.6.1.3.1 (continued)

The SR is modified by a Note (Note 2) stating that the SR is not required to be met when the purge valves are open for the stated reasons. The Note states that these valves may be opened for inerting, de-inerting, pressure control, ALARA, or air quality considerations for personnel entry, or Surveillances that require the valves to be open. The 550 mm purge valves are capable of closing in the environment following a LOCA. Therefore, these valves are allowed to be open for limited periods of time. The 31 day Frequency is consistent with other PCIV requirements discussed in SR 3.6.1.3.2.

SR 3.6.1.3.2

This SR verifies that each primary containment isolation manual valve and blind flange that is located outside primary containment, and is required to be closed during accident conditions, is closed. The SR helps to ensure that post accident leakage of radioactive fluids or gases outside the primary containment boundary is within design limits. This SR does not require any testing or valve manipulation. Rather, it involves verification, through a system walkdown, that those valves outside primary containment, and capable of being mispositioned, are in the correct position. Since verification of valve position for valves outside primary containment is relatively easy, the 31 day Frequency was chosen to provide added assurance that the valves are in the correct positions.

Two Notes have been added to this SR. The first Note allows valves and blind flanges located in high radiation areas to be verified by use of administrative controls. Allowing verification by administrative controls is considered acceptable, since the primary containment is inerted and access to these areas is typically restricted during MODES 1, 2, and 3 for ALARA reasons. Therefore, the probability of misalignment of these valves, once they have been verified to be in the proper position, is low. A second Note has been included to clarify that valves that are open under administrative controls are not required to meet the SR during the time that the valves are open.

SR 3.6.1.3.3

This SR verifies that each primary containment manual isolation valve and blind flange that is located inside primary containment, and is required to be closed during accident conditions, is closed. The SR helps to ensure that post accident leakage of radioactive fluids or gases outside

BASES

SURVEILLANCE REQUIREMENTS (continued)

SR 3.6.1.3.3 (continued)

the primary containment boundary is within design limits. For valves inside primary containment, the Frequency defined as "prior to entering MODE 2 or 3 from MODE 4, if primary containment was de-inerted while in MODE 4, if not performed within the previous 92 days," is appropriate since these valves and flanges are operated under administrative controls and the probability of their misalignment is low.

Two Notes have been added to this SR. The first Note allows valves and blind flanges located in high radiation areas to be verified by use of administrative controls. Allowing verification by administrative controls is considered acceptable since the primary containment is inerted and access to these areas is typically restricted during MODES 1, 2, and 3 for ALARA reasons. Therefore, the probability of misalignment of these valves, once they have been verified to be in their proper position, is low. A second Note has been included to clarify that valves that are open under administrative controls are not required to meet the SR during the time that the valves are open.

SR 3.6.1.3.4

The automatic traversing incore probe (ATIP) shear isolation valves are actuated by explosive charges. Surveillance of explosive charge continuity provides assurance that ATIP valves will actuate when required. Other administrative controls, such as those that limit the shelf life of the explosive charges, must be followed. The 31 day Frequency is based on operating experience that has demonstrated the reliability of the explosive charge continuity.

SR 3.6.1.3.5

Verifying the isolation time of each power operated and each automatic PCIV is within limits is required to demonstrate OPERABILITY. MSIVs may be excluded from this SR since MSIV full closure isolation time is demonstrated by SR 3.6.1.3.7. The isolation time test ensures that the valve will isolate in a time period less than or equal to that assumed in the safety analyses. The isolation time and Frequency of this SR are in accordance with the requirements of the Inservice Testing Program or 92 days (Refs. 2 and 5).

BASES

SURVEILLANCE REQUIREMENTS (continued)

SR 3.6.1.3.6

For primary containment purge valves with resilient seals, additional leakage rate testing beyond the test requirements of 10 CFR 50, Appendix J (Ref. 3), is required to ensure OPERABILITY. Operating experience has demonstrated that this type of seal has the potential to degrade in a shorter time period than do other seal types. Based on this observation, and the importance of maintaining this penetration leak tight (due to the direct path between primary containment and the environment), a Frequency of 184 days was established as part of the NRC resolution of the resilient seal issue. Additionally, this SR must be performed once within 92 days after opening the valve. The 92 day Frequency was chosen recognizing that cycling the valve could introduce additional seal degradation (beyond that which occurs to a valve that has not been opened). Thus, decreasing the interval (from 184 days) is a prudent measure after a valve has been opened.

The SR is modified by a Note stating that the primary containment purge valves are only required to meet leakage rate testing requirements in MODES 1, 2, and 3. If a LOCA inside primary containment occurs in these MODES, purge valve leakage must be minimized to ensure offsite radiological release is within limits. At other times when the purge valves are required to be capable of closing (e.g., during handling of irradiated fuel), pressurization concerns are not present and the purge valves are allowed to be open.

A second Note has been added to this SR requiring that the results be evaluated against the acceptance criteria of SR 3.6.1.1.1. This ensures that primary containment purge valve leakage is properly accounted for in determining the overall primary containment leakage rate.

SR 3.6.1.3.7

Verifying the total closure time of each MSIV exclusive of electrical delay is within the specified limits is required to demonstrate OPERABILITY. The isolation time test ensures that the MSIV will isolate in a time period that does not exceed the times assumed in the DBA analyses. This ensures that the calculated radiological consequences of these events remain within 10 CFR 100 limits. The Frequency of this SR is 3 months.

BASES

SURVEILLANCE REQUIREMENTS (continued)

SR 3.6.1.3.8

Automatic PCIVs close on a primary containment isolation signal to prevent leakage of radioactive material from primary containment following a DBA. This SR ensures that each automatic PCIV will actuate to its isolation position on a primary containment isolation signal. The testing in LCO 3.3.1.1 and LCO 3.3.1.4 overlaps this SR to provide complete testing of the safety function. The 18 month Frequency was developed considering it is prudent that this Surveillance be performed only during a unit outage since isolation of penetrations would eliminate cooling water flow and disrupt the normal operation of many critical components. For some PCIVs, the Inservice Testing Program allows this surveillance to be performed during cold shutdown, as opposed to a unit outage, provided the Frequency is no greater than 18 months. Operating experience has shown that these components usually pass this Surveillance when performed at the 18 month Frequency. Therefore, the Frequency was concluded to be acceptable from a reliability standpoint.

SR 3.6.1.3.9

This SR requires a demonstration that each reactor instrumentation line excess flow check valve (EFCV) is OPERABLE by verifying that the valve reduces flow to $\leq$ 1.05 cm^3/sec on a simulated instrument line break. This SR provides assurance that the instrumentation line EFCVs will perform so that predicted radiological consequences will not be exceeded during the postulated instrument line break event evaluated in Reference 4. The 18 month Frequency is based on the need to perform this Surveillance under the conditions that apply during a plant outage and the potential for an unplanned transient if the Surveillance were performed with the reactor at power. Operating experience has shown that these components usually pass this Surveillance when performed at the 18 month Frequency. Therefore, the Frequency was concluded to be acceptable from a reliability standpoint.

SR 3.6.1.3.10

The ATIP shear isolation valves are actuated by explosive charges. An in place functional test is not possible with this design. The explosive squib is removed and tested to provide assurance that the valves will actuate when required. The replacement charge for the explosive squib shall be

BASES

SURVEILLANCE REQUIREMENTS (continued)

SR 3.6.1.3.10 (continued)

from the same manufactured batch as the one fired or from another batch that has been certified by having one of the batch successfully fired. The Frequency of 18 months on a STAGGERED TEST BASIS is considered adequate given the administrative controls on replacement charges and the frequent checks of circuit continuity (SR 3.6.1.3.4).

SR 3.6.1.3.11

Surveillance of hydrostatically tested lines provides assurance that the calculation assumptions of Reference 2 are met. Note also that dual function valves must pass all applicable SRs, including the Type C leakage rate test (SR 3.6.1.1.1), if appropriate. The combined leakage rates must be demonstrated in accordance with the leakage rate test requirements of 10 CFR 50, Appendix J (Ref. 3), as modified by approved exemptions.

This SR has been modified by two Notes. Note 1 states that these valves are only required to meet the combined leakage rate in MODES 1, 2, and 3, since this is when the Reactor Coolant System is pressurized and primary containment is required. In some instances, the valves are required to be capable of automatically closing during MODES other than MODES 1, 2, and 3. However, their leak tightness under accident conditions is not required in these other MODES or conditions. Note 2 has been added to this SR requiring the results to be evaluated against the acceptance criteria of SR 3.6.1.1.1. This ensures that these valves are properly accounted for in determining the overall primary containment leakage rate.

SR 3.6.1.3.12

The analyses in References 2 and 4 are based on leakage that is less than the specified leakage rate. Leakage through each MSIV must be $\leq$ 1 m^3/h when tested at $\geq$ Pt of 0.173 MPaG. The MSIV leakage rate must be verified to be in accordance with the leakage test requirements of 10 CFR 50, Appendix J (Ref. 3), as modified by approved exemptions. The Frequency is required by 10 CFR 50, Appendix J, as modified by approved exemptions; thus, SR 3.0.2 (which allows Frequency extensions) does not apply.

BASES

SURVEILLANCE REQUIREMENTS (continued)

SR 3.6.1.3.13

Reviewer's Note: This SR is only required for those plants with purge valves with resilient seals allowed to be open during MODE 1, 2 or 3 and having blocking devices that are not permanently installed on the valves.

Verifying each 550 mm primary containment purge valve is blocked to restrict opening to ≤ 50% is required to ensure that the valves can close under DBA conditions within the times assumed in the analysis of References 2 and 4.

The SR is modified by a Note stating that this SR is only required to be met in MODES 1, 2, and 3. If a LOCA occurs, the purge valves must close to maintain containment leakage within the values assumed in the accident analysis. At other times when purge valves are required to be capable of closing (e.g., during movement of irradiated fuel assemblies), pressurization concerns are not present, thus the purge valves can be fully open. The 18 month Frequency is appropriate because the blocking devices are typically removed only during a refueling outage.

REFERENCES

1. DCD Tier 2, Chapter 15.
2. DCD Tier 2, Table 6.2-7.
3. 10 CFR 50, Appendix J.
4. DCD Tier 2, Section 6.2.
5. DCD Tier 2, Section 3.9.6.

B 3.6 CONTAINMENT SYSTEMS

B 3.6.1.4 Drywell Pressure

BASES

BACKGROUND	The drywell pressure is limited during normal operations to preserve the initial conditions assumed in the accident analysis for a Design Basis Accident (DBA) or loss of coolant accident (LOCA).
APPLICABLE SAFETY ANALYSES	Primary containment performance is evaluated for the entire spectrum of break sizes for postulated LOCAs (Ref. 1). Among the inputs to the DBA is the initial primary containment internal pressure (Ref. 1). Analyses assume an initial drywell pressure of 5.20×10^{-3} MPaG. This limitation ensures that the safety analysis remains valid by maintaining the expected initial conditions and ensures that the peak LOCA drywell internal pressure does not exceed the maximum allowable of 0.310 MPaG. The maximum calculated drywell pressure occurs during a feedwater line break. The calculated peak drywell pressure for this limiting event is 240 kPaG (Ref. 1). Drywell pressure satisfies Criterion 2 of the NRC Policy Statement.
LCO	In the event of a DBA, with an initial drywell pressure $\leq 5.20 \times 10^{-3}$ MPaG, the resultant peak drywell accident pressure will be maintained below the drywell design pressure.
APPLICABILITY	In MODES 1, 2, and 3, a DBA could cause a release of radioactive material to primary containment. In MODES 4 and 5, the probability and consequences of these events are reduced due to the pressure and temperature limitations of these MODES. Therefore, maintaining drywell pressure within limits is not required in MODE 4 or 5.
ACTIONS	<u>A.1</u> With drywell pressure not within the limit of the LCO, drywell pressure must be restored within 1 hour. The Required Action is necessary to return operation to within the bounds of the primary containment analysis. The 1 hour Completion Time is consistent with the ACTIONS of LCO 3.6.1.1, “Primary Containment,” which requires that primary containment be restored to OPERABLE status within 1 hour.

BASES

ACTIONS (continued)

B.1 and B.2

If drywell pressure cannot be restored to within limit within the required Completion Time, the plant must be brought to a MODE in which the LCO does not apply. To achieve this status, the plant must be brought to at least MODE 3 within 12 hours and to MODE 4 within 36 hours. The allowed Completion Times are reasonable, based on operating experience, to reach the required plant conditions from full power conditions in an orderly manner and without challenging plant systems.

SURVEILLANCE REQUIREMENTS

SR 3.6.1.4.1

Verifying that drywell pressure is within limit ensures that unit operation remains within the limit assumed in the primary containment analysis. The 12 hour Frequency of this SR was developed, based on operating experience related to trending of drywell pressure variations and pressure instrument drift during the applicable MODES. Furthermore, the 12 hour Frequency is considered adequate in view of other indications available in the control room, including alarms, to alert the operator to an abnormal drywell pressure condition.

REFERENCES

1. DCD Tier 2, Section 6.2.

B 3.6 CONTAINMENT SYSTEMS

B 3.6.1.5 Drywell Air Temperature

BASES

BACKGROUND

The drywell contains the reactor vessel and piping, which add heat to the airspace. Drywell coolers remove heat and maintain a suitable environment. The average airspace temperature affects the calculated response to postulated Design Basis Accidents (DBAs). The limitation on the drywell average air temperature was developed as reasonable, based on operating experience. The limitation on drywell air temperature is used in the Reference 1 safety analyses.

APPLICABLE SAFETY ANALYSES

Primary containment performance is evaluated for a spectrum of break sizes for postulated loss of coolant accidents (LOCAs) (Ref. 1). Among the inputs to the design basis analysis is the initial drywell average air temperature (Ref. 1). Analyses assume an initial average drywell air temperature of 57°C. This limitation ensures that the safety analysis remains valid by maintaining the expected initial conditions and ensures that the peak LOCA drywell temperature does not exceed the maximum allowable temperature of 171°C (Ref. 2). Exceeding this design temperature may result in the degradation of the primary containment structure under accident loads. Equipment inside primary containment, required to mitigate the effects of a DBA, is designed to operate and be capable of operating under environmental conditions expected for the accident.

The most severe drywell temperature condition occurs as a result of a small Reactor Coolant System rupture above the reactor water level, which results in the blowdown of reactor steam to the drywell. The drywell temperature analysis considers main steam line breaks occurring inside the drywell and having various break areas. The maximum calculated drywell average temperature for the worst case break area is provided in Reference 2.

Drywell air temperature satisfies Criterion 2 of the NRC Policy Statement.

LCO

In the event of a DBA, with an initial drywell average air temperature less than or equal to the LCO temperature limit, the resultant peak accident temperature is maintained below the drywell design temperature. As a result, the ability of primary containment to perform its design function is ensured.

BASES

APPLICABILITY

In MODES 1, 2, and 3, a DBA could cause a release of radioactive material to primary containment. In MODES 4 and 5, the probability and consequences of these events are reduced due to the pressure and temperature limitations of these MODES. Therefore, maintaining drywell average air temperature within the limit is not required in MODE 4 or 5.

ACTIONS

A.1

With drywell average air temperature not within the limit of the LCO, drywell average temperature must be restored within 8 hours. The Required Action is necessary to return operation to within the bounds of the primary containment analysis. The 8 hour Completion Time is acceptable, considering the sensitivity of the analysis to variations in this parameter, and provides sufficient time to correct minor problems.

B.1 and B.2

If the drywell average air temperature cannot be restored to within limit within the required Completion Time, the plant must be brought to a MODE in which the LCO does not apply. To achieve this status, the plant must be brought to at least MODE 3 within 12 hours and to MODE 4 within 36 hours. The allowed Completion Times are reasonable, based on operating experience, to reach the required plant conditions from full power conditions in an orderly manner and without challenging plant systems.

SURVEILLANCE REQUIREMENTS

SR 3.6.1.5.1

Verifying that the drywell average air temperature is within the LCO limit ensures that operation remains within the limits assumed for the primary containment analyses. Drywell air temperature is monitored in all quadrants and at various elevations (referenced to mean sea level). Due to the shape of the drywell, a volumetric average is used to determine an accurate representation of the actual average temperature.

The 24 hour Frequency of the SR was developed based on operating experience related to drywell average air temperature variations and temperature instrument drift during the applicable MODES and the low probability of a DBA occurring between surveillances. Furthermore, the 24 hour Frequency is considered adequate in view of other indications available in the control room, including alarms, to alert the operator to an abnormal drywell air temperature condition.

BASES

REFERENCES

1. DCD Tier 2, Section 6.2.

2. DCD Tier 2, Section 6.2.1.

B 3.6 CONTAINMENT SYSTEMS

B 3.6.1.6 Wetwell-to-Drywell Vacuum Breakers

BASES

BACKGROUND

The function of the wetwell-to-drywell vacuum breakers is to relieve vacuum in the drywell. There are eight internal vacuum breakers between the drywell and the wetwell, which allow gas and steam flow from the wetwell to the drywell when the drywell is at a lower pressure than the wetwell. Therefore, the wetwell-to-drywell vacuum breakers prevent an excessive negative differential pressure across the wetwell/drywell boundary. Each vacuum breaker is a self actuating valve, similar to a check valve, and requires no external power for actuation.

A negative pressure inside the drywell is caused by rapid depressurization of the drywell. Events that cause this rapid depressurization are cooling cycles, inadvertent drywell spray actuation and steam condensation from sprays or subcooled water spilling out of a break in reflood stage of a primary system rupture. Cooling cycles result in minor pressure transients in the drywell that occur slowly and are normally controlled by heating and ventilation equipment. Spray actuation or the spill of subcooled water out of a break results in more significant pressure transients and are important in sizing the internal vacuum breakers.

In the event of a primary system rupture, steam condensation within the drywell results in the most severe pressure transient. Following a primary system rupture, gas in the drywell is purged into the wetwell free airspace, leaving the drywell full of steam. Subsequent condensation of the steam can be caused in two possible ways, namely, Emergency Core Cooling System flow from a ruptured pipe, or containment spray actuation following a loss of coolant accident (LOCA). These two cases determine the maximum depressurization rate of the drywell.

In addition, the waterleg in the vertical vents of the vent system is controlled by the drywell-to-wetwell differential pressure. If the drywell pressure is less than the wetwell pressure, there will be an increase in the vent waterleg. This will result in an increase in the water clearing inertia in the event of a postulated LOCA, resulting in an increase in the peak drywell pressure. This in turn will result in an increase in the pool swell dynamic loads. The internal vacuum breakers limit the height of the waterleg in the vent system during normal operation.

BASES

APPLICABLE SAFETY ANALYSES

Analytical methods and assumptions involving the wetwell-to-drywell vacuum breakers are presented in Reference 1 as part of the accident response of the primary containment systems. The vacuum breakers are provided as part of the primary containment to limit the negative differential pressure across the drywell and wetwell walls that form part of the primary containment boundary.

The safety analyses assume that the internal vacuum breakers are closed initially and are fully open at a differential pressure of 3.45×10^{-3} MPaD (Ref. 1). Additionally, one of the eight internal vacuum breakers is assumed to fail in a closed position (Ref. 1). The results of the analyses show that the design negative differential pressure is not exceeded even under the worst case accident scenario. The vacuum breaker opening differential pressure and the requirement that all eight vacuum breakers be OPERABLE are necessary to limit the vent system waterleg height. Design Basis Accident (DBA) analyses require the vacuum breakers to be closed initially and to remain closed, with the drywell at a higher pressure relative to the wetwell.

The wetwell-to-drywell vacuum breakers satisfy Criterion 3 of the NRC Policy Statement.

LCO

All eight of the vacuum breakers must be OPERABLE for opening. All wetwell-to-drywell vacuum breakers, however, are required to be closed (except when the vacuum breakers are performing the intended design function). The vacuum breaker OPERABILITY requirement provides assurance that the drywell-to-wetwell negative differential pressure remains below the design value. The requirement that the vacuum breakers be closed ensures that there is no excessive bypass leakage should a LOCA occur.

APPLICABILITY

In MODES 1, 2, and 3, a DBA could result in excessive negative differential pressure across the drywell wall, caused by the rapid depressurization of the drywell. The event that results in the limiting rapid depressurization of the drywell is the primary system rupture that purges the drywell of gas and fills the drywell free airspace with steam. Subsequent condensation of the steam (due to cold water spilling out of the ruptured pipe) would result in depressurization of the drywell. The limiting pressure and temperature of the primary system prior to a DBA occur in MODES 1, 2, and 3. Also, inadvertent actuation of the drywell spray could result in rapid depressurization of the drywell. The vacuum breakers, therefore, are required to be OPERABLE in MODES 1, 2, and 3.

BASES

APPLICABILITY (continued)

In MODES 4 and 5, the probability and consequences of these events are reduced by the pressure and temperature limitations in these MODES; therefore, maintaining wetwell-to-drywell vacuum breakers OPERABLE is not required in MODE 4 or 5.

ACTIONS

A.1

With one of the eight vacuum breakers inoperable for opening (e.g., the vacuum breaker is not open and may be stuck closed or not within its opening differential pressure limit, so that it would not function as designed during an event that depressurized the drywell), the remaining seven OPERABLE vacuum breakers are capable of providing the vacuum relief function. However, overall system reliability is reduced because a single failure in one of the remaining vacuum breakers could result in an excessive wetwell-to-drywell differential pressure during a DBA.

Therefore, with one of the eight required vacuum breakers inoperable, 72 hours is allowed to restore the inoperable vacuum breaker to OPERABLE status so that plant conditions are consistent with those assumed for the design basis analysis. The 72 hour Completion Time is considered acceptable due to the low probability of an event in which the remaining vacuum breaker capability would not be adequate.

B.1

One or more open vacuum breakers allow communication between the drywell and wetwell airspace, and, as a result, there is the potential for wetwell overpressurization due to this bypass leakage if a LOCA were to occur. Since the vacuum breakers are normally biased closed by gravitational force, Condition B mostly like be entered due to inaccurate position indication.

If vacuum breaker position indication is not reliable, an alternate method of verifying that the vacuum breakers are closed is by checking the position indication instrumentation. Another alternate method of verifying that the vacuum breakers are closed is by increasing the drywell pressure by 3.43×10^{-3} MPa above the wetwell pressure and verifying that the pressure differential does not fall below 2.06×10^{-3} MPaD for 15 minutes without makeup. The required 12 hour Completion Time is considered adequate to perform this test. If the stated criteria of this test is not met, Condition C must be entered.

BASES

ACTIONS (continued)

C.1 and C.2

If the inoperable wetwell-to-drywell vacuum breaker cannot be closed or restored to OPERABLE status within the required Completion Time, the plant must be brought to a MODE in which the LCO does not apply. To achieve this status, the plant must be brought to at least MODE 3 within 12 hours and to MODE 4 within 36 hours. The allowed Completion Times are reasonable, based on operating experience, to reach the required plant conditions from full power conditions in an orderly manner and without challenging plant systems.

SURVEILLANCE REQUIREMENTS

SR 3.6.1.6.1

Each vacuum breaker is verified closed (except when performing its intended function) to ensure that this potential large bypass leakage path is not present. This Surveillance is performed by observing the vacuum breaker position indication or by increasing the drywell pressure by 3.43×10^{-3} MPa above the wetwell pressure and verifying that the pressure differential does not fall below 2.06×10^{-3} MPaD for 15 minutes without makeup. This criteria was developed assuming ideal gas behavior, a leakage area corresponding to 10% of the allowable leakage area, the average temperatures in the wetwell and drywell remained within ± 0.5ºC throughout the testing interval, and that adequate instrumentation exists to measure the pressure decay. Basing the test criteria on 10% of the allowable leakage area provides a large degree of margin in demonstrating that the vacuum breakers are adequately closed and sealed. Additionally, if the allowable leakage area were to exist, a pressure differential of 3.43×10^{-3} MPa would decay completely within 15 minutes. Maintaining the average temperatures of the wetwell and drywell is important because the pressure differentials in this test are relatively small and can be significantly impacted by small temperature changes. (However, if temperature control is a problem, new test parameters should be developed which take into account the normal temperature variations.)

The 14 day Frequency is based on engineering judgment and is considered adequate in view of the fact that the vacuum breakers are normally biased closed by gravitational forces. Verification of vacuum breaker closure is also required within 2 hours after any discharge of steam to the wetwell from the safety/relief valves or any operation that causes the drywell-to-wetwell differential pressure to be reduced by $\geq 6.86 \times 10^{-4}$ MPaD.

BASES

SURVEILLANCE REQUIREMENTS (continued)

SR 3.6.1.6.2

Each vacuum breaker must be cycled to ensure that it opens adequately to perform its design function and returns to the fully closed position. This ensures that the safety analysis assumptions are valid. The 18 month Frequency of this SR is based on the need to perform the surveillance during an outage. The vacuum breakers can only be manually actuated and are only accessible during an outage.

SR 3.6.1.6.3

Verification of the vacuum breaker opening pressure is necessary to ensure the validity of the safety analysis assumption that the vacuum breakers are fully open when the wetwell pressure exceeds the drywell pressure by 3.43×10^{-3} MPa. The 18 month Frequency is based on the need to perform this Surveillance under the conditions that apply during a plant outage. The 18 month Frequency is acceptable based on the passive design of the vacuum breakers (no actuator required for opening).

SR 3.6.1.6.4

A CHANNEL CALIBRATION is a complete check of the instrument loop and the sensor. The test verifies that the channel responds to the measured parameter with the necessary range and accuracy. The 18 month frequency is based on the ABWR expected refueling interval and the need to perform this Surveillance under the conditions that apply during a plant outage.

REFERENCE

1. DCD Tier 2, Section 6.2.

B 3.6 CONTAINMENT SYSTEMS

B 3.6.2.1 Suppression Pool Average Temperature

BASES

BACKGROUND

The wetwell is a steel lined reinforced concrete pressure vessel containing a volume of water called the suppression pool. The suppression pool is designed to absorb the decay heat and sensible energy released during a reactor blowdown from safety/relief valve discharges or from Design Basis Accidents (DBAs). The suppression pool must quench all the steam released through the drywell connecting vent lines during a loss of coolant accident (LOCA). This is the essential mitigative feature of a pressure suppression containment that ensures that the peak containment pressure is maintained below the design pressure of 0.310 MPaG.

The suppression pool must also condense steam from steam exhaust lines in the turbine driven Reactor Core Isolation Cooling System. Suppression pool average temperature (along with LCO 3.6.2.2, “Suppression Pool Water Level”) is a key indication of the capacity of the suppression pool to fulfill these requirements.

The technical concerns that lead to the development of suppression pool average temperature limits are as follows:

a. Complete steam condensation – the original limit for the end of a LOCA blowdown was 76.67ºC, based on the Bodega Bay and Humboldt Bay Tests;

b. Primary containment peak pressure and temperature – the design pressure is 0.310 MPaG and design temperature is 171ºC (Ref. 1); and

c. Condensation oscillation loads maximum allowable initial temperature is 48.9ºC ensures that expected LOCA temperatures are within the range of ABWR tested conditions (Ref. 4).

d. Chugging loads – a maximum allowable initial temperature of 68ºC ensures that expected LOCA temperatures are within the range of ABWR tested conditions (Ref. 4).

BASES

APPLICABLE SAFETY ANALYSES

The postulated DBA against which the primary containment performance is evaluated is the entire spectrum of postulated pipe breaks within the primary containment. Inputs to the safety analyses include initial suppression pool water volume and suppression pool temperature (Reference 1 for LOCAs and Reference 2 for the pool temperature analyses required by Reference 3). An initial pool temperature of 35ºC is assumed for the Reference 1 and 2 analyses. Reactor shutdown at a pool temperature of 43.3ºC and vessel depressurization at a pool temperature of 48.9ºC are assumed for the Reference 2 analyses. The limit of 40.6ºC, at which testing is terminated, is not used in the safety analyses because DBAs are assumed to not initiate during unit testing.

Suppression pool average temperature satisfies Criteria 2 and 3 of the NRC Policy Statement.

LCO

A limitation on the suppression pool average temperature is required to provide assurance that the containment conditions assumed for the safety analyses are met. This limitation subsequently ensures that peak primary containment pressures and temperatures do not exceed maximum allowable values during a postulated DBA or any transient resulting in heatup of the suppression pool. The LCO requirements are:

a. Average temperature ≤ 35ºC when THERMAL POWER is > 1% RTP and no testing that adds heat to the suppression pool is being performed. This requirement ensures that licensing bases initial conditions are met.

b. Average temperature ≤ 40.6ºC when THERMAL POWER > 1% RTP and testing that adds heat to the suppression pool is being performed. This required value ensures that the unit has testing flexibility, and was selected to provide margin below the 43.3ºC limit at which reactor shutdown is required. When testing ends, temperature must be restored to ≤ 35ºC within 24 hours according to Required Action A.2. Therefore, the time period that the temperature is > 35ºC is short enough not to cause a significant increase in unit risk.

c. Average temperature ≤ 43.3ºC when THERMAL POWER is ≤ 1% RTP. This requirement ensures that the unit will be shut down at > 43.3ºC. The pool is designed to absorb decay heat and sensible heat but could be heated beyond design limits by the steam generated if the reactor is not shut down.

At the 1% RTP power level, heat input is approximately equal to normal system heat losses.

BASES

APPLICABILITY

In MODES 1, 2, and 3, a DBA could cause significant heatup of the suppression pool. In MODES 4 and 5, the probability and consequences of these events are reduced due to the pressure and temperature limitations in these MODES. Therefore, maintaining suppression pool average temperature within limits is not required in MODE 4 or 5.

ACTIONS

A.1 and A.2

With the suppression pool average temperature above the specified limit when not performing testing that adds heat to the suppression pool and when above the specified power indication, the initial conditions exceed the conditions assumed for the Reference 1 and 3 analyses. However, primary containment cooling capability still exists, and the primary containment pressure suppression function will occur at temperatures well above those assumed for safety analyses. Therefore, continued operation is allowed for a limited time. The 24 hour Completion Time is adequate to allow the suppression pool average temperature to be restored below the limit. Additionally, when suppression pool temperature is > 35ºC, increased monitoring of the suppression pool temperature is required to ensure that it remains ≤ 43.3ºC. The once per hour Completion Time is adequate based on past experience, which has shown that pool temperature increases relatively slowly except when testing that adds heat to the suppression pool is being performed. Furthermore, the once per hour Completion Time is considered adequate in view of other indications in the control room, including alarms, to alert the operator to an abnormal suppression pool average temperature condition.

B.1

If the suppression pool average temperature cannot be restored to within limits within the required Completion Time, the plant must be brought to a MODE in which the LCO does not apply. To achieve this status, the power must be reduced to ≤ 1% RTP within 12 hours. The 12 hour Completion Time is reasonable, based on operating experience, to reduce power from full power conditions in an orderly manner and without challenging plant systems.

C.1

Suppression pool average temperature is allowed to be > 35ºC when THERMAL POWER is > 1% RTP, and when testing that adds heat to the suppression pool is being performed. However, if temperature is

BASES

ACTIONS (continued)

C.1 (continued)

> 40.6ºC all testing must be immediately suspended to preserve the heat absorption capability of the suppression pool. With the testing suspended, Condition A is entered and the Required Actions and associated Completion Times are applicable.

D.1

When the suppression pool temperature reaches 43.3ºC a reactor scram is automatically initiated. Additionally, when suppression pool temperature is > 43.3ºC, increased monitoring of pool temperature is required to ensure that it remains ≤ 48.9ºC. The once per 30 minute Completion Time is adequate, based on operating experience. Given the high suppression pool average temperature in this Condition, the monitoring Frequency is increased to twice that of Condition A. Furthermore, the 30 minute Completion Time is considered adequate in view of other indications available in the control room, including alarms, to alert the operator to an abnormal suppression pool average temperature condition. Additionally, the plant must be brought to a MODE in which the LCO does not apply. To achieve this status, the plant must be brought to at least MODE 4 within 36 hours. The allowed Completion Time is reasonable, based on operating experience, to reach the required plant condition from full power conditions in an orderly manner and without challenging plant systems.

E.1

If suppression pool average temperature cannot be maintained at ≤ 48.9ºC, the plant must be brought to a MODE in which the LCO does not apply. To achieve this status, the reactor pressure must be reduced to < 1.38 MPaG within 12 hours. The allowed Completion Time is reasonable, based on operating experience, to reach the required plant conditions from full power conditions in an orderly manner and without challenging plant systems.

Continued addition of heat to the suppression pool with suppression pool temperature > 48.9ºC could result in exceeding the design basis maximum allowable values for primary containment temperature or pressure. Furthermore, if a blowdown were to occur when the temperature was > 48.9ºC, the maximum allowable bulk and local temperatures could be exceeded very quickly.

BASES

SURVEILLANCE REQUIREMENTS

SR 3.6.2.1.1

The suppression pool average temperature is regularly monitored to ensure that the required limits are satisfied. The average temperature is determined by taking an arithmetic average of the OPERABLE suppression pool water temperature channels. The 24 hour Frequency has been shown, based on operating experience, to be acceptable. When heat is being added to the suppression pool by testing, however, it is necessary to monitor suppression pool temperature more frequently. The 5 minute Frequency during testing is justified by the rates at which tests will heat up the suppression pool, has been shown to be acceptable based on operating experience, and provides assurance that allowable pool temperatures are not exceeded. The Frequencies are further justified in view of other indications available in the control room, including alarms, to alert the operator to an abnormal suppression pool average temperature condition.

REFERENCES

1. DCD Tier 2, Section 6.2.1.

2. DCD Tier 2, Section 15.1.

3. NUREG-0783, “Suppression Pool Temperature Limits for BWR Containments.”

4. DCD Tier 2, Section 3B.4.3.

B 3.6 CONTAINMENT SYSTEMS

B 3.6.2.2 Suppression Pool Water Level

BASES

BACKGROUND

The suppression pool is a steel lined reinforced concrete pressure vessel containing a volume of water called the suppression pool. The suppression pool is designed to absorb the energy associated with decay heat and sensible heat released during a reactor blowdown from safety/relief valve (S/RV) discharges or from a Design Basis Accident (DBA). The suppression pool must quench all the steam released through the vent lines during a loss of coolant accident (LOCA). This is the essential mitigative feature of a pressure suppression containment, which ensures that the peak containment pressure is maintained below the design pressure of 0.310 MPaG.

The suppression pool must also condense steam from the steam exhaust lines in the turbine driven Reactor Core Isolation Cooling (RCIC) System and provides the main emergency water supply source for the reactor vessel. The suppression pool level ranges between a volume of 3580 m^3 at the low water level limit of 7 m and the a volume of 3625 m^3 high water level limit of 7.1 m.

If the suppression pool water level is too low, an insufficient amount of water would be available to adequately condense the steam from the S/RV quenchers, main vents, or RCIC turbine exhaust lines. Low suppression pool water level could also result in an inadequate emergency makeup water source to the Emergency Core Cooling System. The lower volume would also absorb less steam energy before heating up excessively. Therefore, a minimum suppression pool water level is specified.

If the suppression pool water level is too high, it could result in excessive clearing loads from S/RV discharges and excessive loads during a DBA LOCA. Therefore, a maximum pool water level is specified. This LCO specifies an acceptable range to prevent the suppression pool water level from being either too high or too low.

APPLICABLE SAFETY ANALYSES

Initial suppression pool water level affects suppression pool temperature response calculations, calculated drywell pressure during vent clearing for a DBA, calculated pool swell loads for a DBA LOCA, and calculated loads due to S/RV discharges. Suppression pool water level must be maintained within the limits specified so that the safety analysis of Reference 1 remains valid.

Suppression pool water level satisfies Criteria 2 and 3 of the NRC Policy Statement.

BASES

LCO

A limit that suppression pool water level be ≥ 7 m and ≤ 7.1 m is required to ensure that the primary containment conditions assumed for the safety analyses are met. Either the high or low water level limits were used in the safety analyses, depending upon which is more conservative for a particular calculation.

APPLICABILITY

In MODES 1, 2, and 3, a DBA could cause significant loads on the primary containment. In MODES 4 and 5, the probability and consequences of these events are reduced due to the pressure and temperature limitations in these MODES. Therefore, maintaining suppression pool water level within limits is not required in MODE 4 or 5.

ACTIONS

A.1

With suppression pool water level outside the limits, the conditions assumed for the safety analyses are not met. If water level is below the minimum level, the pressure suppression function still exists as long as top horizontal vents remain covered, RCIC turbine exhausts are covered, and S/RV quenchers are covered. If suppression pool water level is above the maximum level, protection against overpressurization still exists due to the margin in the peak containment pressure analysis or as long as the drywell and wetwell sprays are OPERABLE. Therefore, continued operation for a limited time is allowed. The 2 hour Completion Time is sufficient to restore suppression pool water level to within limits. Also, it takes into account the low probability of an event impacting the suppression pool water level occurring during this interval.

B.1 and B.2

If suppression pool water level cannot be restored to within limits within the required Completion Time, the plant must be brought to a MODE in which the LCO does not apply. To achieve this status, the plant must be brought to at least MODE 3 within 12 hours and to MODE 4 within 36 hours. The allowed Completion Times are reasonable, based on operating experience, to reach the required plant conditions from full power conditions in an orderly manner and without challenging plant systems.

BASES

SURVEILLANCE REQUIREMENTS

SR 3.6.2.2.1

Verification of the suppression pool water level is to ensure that the required limits are satisfied. The 24 hour Frequency of this SR was developed considering operating experience related to trending variations in suppression pool water level and water level instrument drift during the applicable MODES and to assessing the proximity to the specified LCO level limits. Furthermore, the 24 hour Frequency is considered adequate in view of other indications available in the control room, including alarms, to alert the operator to an abnormal suppression pool water level condition.

REFERENCE

1. DCD Tier 2, Section 6.2.

B 3.6 CONTAINMENT SYSTEMS

B 3.6.2.3 Residual Heat Removal (RHR) Suppression Pool Cooling

BASES

BACKGROUND

Following a Design Basis Accident (DBA), the RHR Suppression Pool Cooling System removes heat from the suppression pool. The suppression pool is designed to absorb the sudden input of heat from the primary system. In the long term, the pool continues to absorb residual heat generated by fuel in the reactor core. Some means must be provided to remove heat from the suppression pool so that the temperature inside the primary containment remains within design limits. This function is provided by three redundant RHR suppression pool cooling subsystems. The purpose of this LCO is to ensure that the three subsystems are OPERABLE in applicable MODES.

Each RHR subsystem contains one pump and one heat exchanger and is both manually and automatically initiated and independently controlled. The three RHR subsystems perform the suppression pool cooling function by circulating water from the suppression pool through the RHR heat exchangers and returning it to the suppression pool. Reactor Building Cooling Water (RCW), circulating through the shell side of the heat exchangers, exchanges heat with the suppression pool water and discharges this heat to the external heat sink via the reactor service water (RSW) system.

The combined heat removal capability of two RHR subsystems operating simultaneously is sufficient to meet the overall DBA pool cooling requirement for loss of coolant accidents (LOCAs) and transient events such as a turbine trip or stuck open safety/relief (S/RV). S/RV leakage and Reactor Core Isolation Cooling System testing increase suppression pool temperature more slowly. The RHR Suppression Pool Cooling System is also used to lower the suppression pool water bulk temperature following such events.

APPLICABLE SAFETY ANALYSES

Reference 1 contains the results of analyses used to predict primary containment pressure and temperature following large and small break LOCAs. The intent of the analyses is to demonstrate that the heat removal capacity of the RHR Suppression Pool Cooling System is adequate to maintain the primary containment conditions within design limits. The suppression pool temperature is calculated to remain below the design limit.

BASES

APPLICABLE SAFETY ANALYSES (continued)

Reference 3 contains discussion of additional analyses that were performed to support PRA success criteria for the long term heat removal function. The intent of these analyses was to predict primary containment pressure and temperature following low probability events beyond the DBA and to determine the minimum heat-removal capacity required to maintain the primary containment conditions within its ultimate capacity. The results are used to establish the minimum amount of RHR (Suppression Pool Cooling) system equipment required to prevent ultimate containment failure beyond DBA events.

The RHR Suppression Pool Cooling System satisfies Criterion 3 of the NRC Policy Statement.

LCO

During a DBA, a minimum of two RHR suppression pool cooling subsystems are required to maintain the primary containment peak pressure and temperature below the design limits (Ref. 1). To ensure that these requirements are met, three RHR suppression pool cooling subsystems must be OPERABLE with power from three safety related independent power supplies. Therefore, in the event of an accident, at least two subsystems are OPERABLE, assuming the worst case single active failure. An RHR suppression pool cooling subsystem is OPERABLE when the pump, the heat exchanger, and associated piping, valves, instrumentation, and controls are OPERABLE.

APPLICABILITY

In MODES 1, 2, and 3, a DBA could cause a release of radioactive material to primary containment and cause a heatup and pressurization of primary containment. In MODES 4 and 5, the probability and consequences of these events are reduced due to the pressure and temperature limitations in these MODES. Therefore, the RHR Suppression Pool Cooling System is not required to be OPERABLE in MODE 4 or 5.

ACTIONS

A.1

With one RHR suppression pool cooling subsystem inoperable, the inoperable subsystem must be restored within 14 days. In this Condition, the remaining RHR suppression pool cooling subsystems are adequate to perform the primary containment cooling function. However, the overall reliability is reduced because a single failure in one of the OPERABLE subsystems could result in reduced primary containment cooling capability. The 14 day Completion Time is acceptable in light of the redundant RHR suppression pool cooling capabilities afforded by the OPERABLE subsystems and the low probability of a DBA occurring

BASES

ACTIONS

A.1 (continued)

during this period. Additionally, analyses of beyond design basis events demonstrates that one RHR suppression pool cooling subsystem is adequate to maintain containment conditions below the ultimate capacity (Ref. 4). Furthermore, results of PRA sensitivity studies performed (Ref. 5) show that this situation is acceptable from an overall risk perspective.

B.1 and B.2

With two or more RHR suppression pool cooling subsystems inoperable, the remaining OPERABLE RHR suppression pool cooling subsystem affords significant primary containment cooling capability and would be sufficient to maintain containment conditions well below its ultimate capacity. However, the overall reliability is reduced because a worst case single failure in the one OPERABLE subsystem during a LOCA will result in a loss of primary containment cooling capability.

If the Required Action and associated Completion Time of Conditions A cannot be met within the required Completion Time or if two or more RHR suppression pool cooling subsystems are inoperable, the plant must be brought to a MODE in which the LCO does not apply. To achieve this status, the plant must be brought to at least MODE 3 within 12 hours and to MODE 4 within 36 hours. The allowed Completion Times are reasonable, based on operating experience, to reach the required plant conditions from full power conditions in an orderly manner and without challenging plant systems.

SURVEILLANCE REQUIREMENTS

SR 3.6.2.3.1

Verifying the correct alignment for manual, power operated, and automatic valves, in the RHR suppression pool cooling mode flow path provides assurance that the proper flow path exists for system operation. This SR does not apply to valves that are locked, sealed, or otherwise secured in position since these valves were verified to be in the correct position prior to locking, sealing, or securing. This SR does not require any testing or valve manipulation; rather, it involves verification that those valves capable of being mispositioned are in the correct position. This SR does not apply to valves that cannot be inadvertently misaligned, such as check valves.

BASES

SURVEILLANCE REQUIREMENTS

SR 3.6.2.3.1 (continued)

The Frequency of 31 days is justified because the valves are operated under procedural control, improper valve position would affect only a single subsystem, and the probability of an event requiring initiation of the system is low. This Frequency has been shown to be acceptable, based on operating experience.

SR 3.6.2.3.2

Verifying that each RHR pump develops a flow rate ≥ 954 m^3/h, while operating in the suppression pool cooling mode with flow through the associated heat exchanger ensures that pump performance has not degraded during the cycle. Such inservice inspections confirm component OPERABILITY, trend performance, and detect incipient failures by indicating abnormal performance. The Frequency of this SR is 92 days.

REFERENCES

1. DCD Tier 2, Section 6.2.
2. Not Used.
3. DCD Tier 2, Section 19.2.4.3.
4. DCD Tier 2, Section 20.3.9, Response to RAI 725.5
5. Letter, Jack Fox to Chet Poslusny, “Submittal Supporting Accelerated ABWR Review Schedule-ABWR CDF Sensitivity to ESF Equipment Out of Service”, Docket No. STN 52-001, July 27, 1993.

B 3.6 CONTAINMENT SYSTEMS

B 3.6.2.4 Residual Heat Removal (RHR) Containment Spray

BASES

BACKGROUND

The primary containment is designed with a suppression pool so that, in the event of a loss of coolant accident (LOCA), or a rapid depressurization of the reactor pressure vessel (RPV) through the safety/relief valves, steam released from the primary system is channeled through the suppression pool water and condensed without producing significant pressurization of the primary containment. The primary containment is designed so that with the pool initially at the minimum water volume and the worst single failure of the primary containment heat removal systems, suppression pool energy absorption combined with subsequent operator controlled pool cooling will prevent the primary containment pressure from exceeding its design value. However, the primary containment must also withstand a postulated bypass leakage pathway that allows the passage of steam from the drywell directly into the wetwell airspace, bypassing the suppression pool. Some means must be provided to condense steam from the wetwell so that the pressure inside primary containment remain within the design limit. This function is provided by two redundant RHR containment spray subsystems (only RHR subsystems B and C operate in this mode. The purpose of this LCO is to ensure that both subsystems are OPERABLE in applicable MODES.

Each of the two RHR containment spray subsystems contains a pump and a heat exchanger, which are manually initiated and independently controlled. The two subsystems perform the containment spray function by circulating water from the suppression pool through the RHR heat exchangers and returning it to the common wetwell spray sparger and the common drywell spray sparger. In addition, the ACIWA mode of RHR(C) subsystem provides a backup drywell or wetwell spray capability. The wetwell sparger only accommodates a small portion of the total RHR pump flow; the remainder of the flow is routed to the drywell spray sparger. Reactor Building Cooling Water (RCW) circulating through the shell side of the heat exchangers, exchanges heat with the suppression pool water and discharges this heat to the external heat sink via the reactor service water (RSW) system. Either RHR wetwell spray subsystem is sufficient to condense the steam from bypass leaks from the drywell to the wetwell airspace during the postulated LOCA.

BASES

APPLICABLE SAFETY ANALYSES

Reference 1 contains the results of analyses that predict the primary containment pressure response for a LOCA with the maximum bypass leakage effective area. The effective flow path area for bypass leakage has been calculated to be 5 cm^2, assuming no spray operation. With operation of one wetwell spray subsystem, the effective bypass leakage area was calculated to be 50 cm^2.

The intent of the analyses is to demonstrate that the pressure reduction capacity of the RHR containment spray system operating in the wetwell spray mode is adequate to maintain the primary containment conditions within the design limit.

The RHR containment spray system satisfies Criterion 3 of the NRC Policy Statement.

LCO

In the event of a LOCA, a minimum of one RHR containment spray subsystem is required to mitigate potential bypass leakage paths and maintain the primary containment peak pressure below the design limits (Ref. 1). To ensure that these requirements are met, two RHR containment spray subsystems must be OPERABLE with power from two safety related independent power supplies. Therefore, in the event of an accident, at least one subsystem is OPERABLE, assuming the worst case single active failure. An RHR containment spray subsystem is OPERABLE when the pump, the heat exchanger, and associated piping, valves, instrumentation, and controls for both wetwell and drywell spray modes are OPERABLE.

APPLICABILITY

In MODES 1, 2, and 3, a LOCA could cause heatup and pressurization of the primary containment. In MODES 4 and 5, the probability and consequences of these events are reduced due to the pressure and temperature limitations in these MODES. Therefore, maintaining the RHR containment spray subsystems OPERABLE is not required in MODE 4 or 5.

ACTIONS

A.1

With one RHR containment spray subsystem inoperable, the ACIWA mode of RHR(C) using the Fire Protection System (FPS) can be used to inject water into the drywell or wetwell spray spargers. The ACIWA is verified to be functional by stroking one complete cycle of each of the two manual valves in the FPS connection to RHR(C) injection line, by

BASES

ACTIONS

A.1 (continued)

verifying that the FPS header pressure is maintained, and by stroking one complete cycle of the RHR(C) subsystem injection valve. The functionality of ACIWA required here is not as restrictive as that required for LCO 3.5.1 Required Action B.2 where the concern is station blackout.

If the ACIWA is verified to be functional, it compensates for the inoperability of one RHR containment spray subsystem and restores the redundant capability for primary containment bypass leakage mitigation function. During the time period when one RHR containment spray subsystem is inoperable, the remaining OPERABLE RHR containment spray subsystem is adequate to perform the primary containment bypass leakage mitigation function. However, the overall reliability is reduced if ACIWA can not be verified to be functional during this time period, and therefore the Completion Time is restricted to 7 days. If the ACIWA is verified to be functional, a Completion Time of 14 days is chosen in light of the redundant containment spray capabilities afforded by the OPERABLE subsystem and ACIWA, and the low probability of a small break in the reactor coolant boundary occurring during this period.

B.1

With both RHR containment spray subsystems inoperable, at least one subsystem must be restored to OPERABLE status within 8 hours. In this Condition, there is a substantial loss of the primary containment bypass leakage mitigation function. The 8 hour Completion Time is based on this loss of function and is considered acceptable due to the low probability of a DBA and because alternative methods to remove heat from primary containment are available.

C.1

If the inoperable RHR containment spray subsystem cannot be restored to OPERABLE status within the associated Completion Time, the plant must be brought to a MODE in which the LCO does not apply. To achieve this status, the plant must be brought to at least MODE 3 within 12 hours and to MODE 4 within 36 hours. The allowed Completion Times are reasonable, based on operating experience, to reach the required plant conditions from full power conditions in an orderly manner and without challenging plant systems.

BASES

SURVEILLANCE REQUIREMENTS

SR 3.6.2.4.1

Verifying the correct alignment for manual, power operated, and automatic valves in the RHR containment spray mode flow paths provides assurance that the proper flow paths will exist for system operation. This SR does not apply to valves that are locked, sealed, or otherwise secured in position since these valves were verified to be in the correct position prior to leaking, sealing, or securing. A valve is also allowed to be in the nonaccident position provided it can be aligned to the accident position within the time assumed in the accident analysis. This is acceptable since the RHR suppression pool cooling mode is manually initiated. This SR does not require any testing or valve manipulation; rather, it involves verification that those valves capable of being mispositioned are in the correct position. This SR does not apply to valves that cannot be inadvertently misaligned, such as check valves.

The Frequency of 31 days is justified because the valves are operated under procedural control, improper valve position would affect only a single subsystem, the probability of an event requiring initiation of the system is low, and the subsystem is a manually initiated system. This Frequency has been shown to be acceptable based on operating experience.

SR 3.6.2.4.2

Verifying each associated RHR pump develops a flow rate $\geq$ 114 m^3/h and less than 160 m^3/h while operating in the wetwell spray mode with flow through the heat exchanger (operating in the suppression pool cooling mode) ensures that pump performance has not degraded during the cycle. Flow is a normal test of centrifugal pump performance required by Section XI of the ASME Code (Ref. 2). This test confirms one point on the pump design curve and is indicative of overall performance. Such inservice inspections confirm component OPERABILITY, trend performance, and detect incipient failures by indicating abnormal performance. In addition, verifying that the wetwell spray flow ensures that the assumptions for minimum flow for bypass leakage mitigation and the maximum flow for wetwell negative pressure evaluation in the Reference 1 analyses remain valid. The Frequency of this SR is 92 days.

REFERENCES

1. DCD Tier 2, Section 6.2.1.1.5.

2. ASME, Boiler and Pressure Vessel Code, Section XI.

B 3.6 CONTAINMENT SYSTEMS

B 3.6.3.1 Primary Containment Hydrogen Recombiners

BASES

Not Used.

B 3.6 CONTAINMENT SYSTEMS

B 3.6.3.2 Primary Containment Oxygen Concentration

BASES

BACKGROUND

All nuclear reactors must be designed to withstand events that generate hydrogen either due to the zirconium metal water reaction in the core or due to radiolysis.

The primary method to control combustible gases is to inert the primary containment. With the primary containment inert, that is, oxygen concentration < 3.5 volume percent (v/o), a combustible mixture cannot be present in the primary containment for any hydrogen concentration. This LCO ensures that oxygen concentration does not exceed 3.5 v/o during operation in the applicable conditions.

APPLICABLE SAFETY ANALYSES

The Reference 1 calculations assume that the primary containment is inerted when a Design Basis Accident loss of coolant accident occurs. Thus, the hydrogen assumed to be released to the primary containment as a result of metal water reaction in the reactor core will not produce combustible gas mixtures in the primary containment.

Primary containment oxygen concentration satisfies Criterion 2 of the NRC Policy Statement.

LCO

The primary containment oxygen concentration is maintained < 3.5 v/o to ensure that an event that produces any amount of hydrogen does not result in a combustible mixture inside primary containment.

APPLICABILITY

The primary containment oxygen concentration must be within the specified limit when primary containment is inerted, except as allowed by the relaxations during startup and shutdown addressed below. The primary containment must be inert in MODE 1, since this is the condition with the highest probability of an event that could produce hydrogen.

Inerting the primary containment is an operational problem because it prevents containment access without an appropriate breathing apparatus. Therefore, the primary containment is inerted as late as possible in the plant startup and de-inerted as soon as possible in the plant shutdown. As long as reactor power is ≤ 15% RTP, the potential for an event that generates significant hydrogen is low and the primary containment need not be inert. Furthermore, the probability of an event that generates

BASES

APPLICABILITY (continued)

hydrogen occurring within the first 24 hours of a startup, or within the last 24 hours before a shutdown, is low enough that these “windows,” when the primary containment is not inerted, are also justified. The 24 hour time period is a reasonable amount of time to allow plant personnel to perform inerting or de-inerting.

ACTIONS

A.1

If oxygen concentration is ≥ 3.5 v/o at any time while operating in MODE 1, with the exception of the relaxations allowed during startup and shutdown, oxygen concentration must be restored to < 3.5 v/o within 24 hours. The 24 hour Completion Time is allowed when oxygen concentration is ≥ 3.5 v/o because of the low probability of an event that would generate significant amounts of hydrogen occurring during this period.

B.1

If oxygen concentration cannot be restored to within limits within the required Completion Time, the plant must be brought to a MODE in which the LCO does not apply. To achieve this status, power must be reduced to ≤ 15% RPT within 8 hours. The 8 hour Completion Time is reasonable, based on operating experience, to reduce reactor power from full power conditions in an orderly manner and without challenging plant systems.

SURVEILLANCE REQUIREMENTS

SR 3.6.3.2.1

The primary containment must be determined to be inert by verifying that oxygen concentration is < 3.5 v/o. The 7 day Frequency is based on the slow rate at which oxygen concentration can change and on other indications of abnormal conditions (which would lead to more frequent checking by operators in accordance with plant procedures). Also, this Frequency has been shown to be acceptable through operating experience.

REFERENCES

1. DCD Tier 2, Section 6.2.5.

B 3.6 CONTAINMENT SYSTEMS

B 3.6.4.1 Secondary Containment

BASES

BACKGROUND

The function of the secondary containment is to contain, dilute, and hold up fission products that may leak from primary containment following a Design Basis Accident (DBA). In conjunction with operation of the Standby Gas Treatment (SGT) System and closure of certain valves whose lines penetrate the secondary containment, the secondary containment is designed to reduce the activity level of the fission products prior to release to the environment and to isolate and contain fission products that are released during certain operations that take place inside primary containment, when primary containment is not required to be OPERABLE, or that take place outside primary containment.

The secondary containment is a structure that completely encloses the primary containment and those components that may be postulated to contain primary system fluid. This structure forms a control volume that serves to hold up and dilute the fission products. It is possible for the pressure in the control volume to rise relative to the environmental pressure (e.g., due to pump and motor heat load additions). To prevent ground level exfiltration while allowing the secondary containment to be designed as a conventional structure, the secondary containment requires support systems to maintain the control volume pressure at less than the external pressure. Requirements for these systems are specified separately in LCO 3.6.4.2, “Secondary Containment Isolation Valves (SCIVs),” and LCO 3.6.4.3, “Standby Gas Treatment (SGT) System.”

APPLICABLE SAFETY ANALYSES

There are two principal accidents for which credit is taken for secondary containment OPERABILITY. These are a loss of coolant accident (LOCA) (Ref. 1) and a fuel handling accident inside secondary containment (Ref. 2). The secondary containment performs no active function in response to each of these limiting events; however, its leak tightness is required to ensure that the release of radioactive materials from the primary containment is restricted to those leakage paths and associated leakage rates assumed in the accident analysis, and that fission products entrapped within the secondary containment structure will be treated by the SGT System prior to discharge to the environment.

Secondary containment satisfies Criterion 3 of the NRC Policy Statement.

BASES

LCO

An OPERABLE secondary containment provides a control volume into which fission products that bypass or leak from primary containment, or are released from the reactor coolant pressure boundary components located in secondary containment, can be diluted and processed prior to release to the environment. For the secondary containment to be considered OPERABLE, it must have adequate leak tightness to ensure that the required vacuum can be established and maintained.

APPLICABILITY

In MODES 1, 2, and 3, a LOCA could lead to a fission product release to primary containment that leaks to secondary containment. Therefore, secondary containment OPERABILITY is required during the same operating conditions that require primary containment OPERABILITY.

In MODES 4 and 5, the probability and consequences of the LOCA are reduced due to the pressure and temperature limitations in these MODES. Therefore, maintaining secondary containment OPERABLE is not required in MODE 4 or 5 to ensure a control volume, except for other situations for which significant releases of radioactive material can be postulated, such as during operations with a potential for draining the reactor vessel (OPDRVs), during CORE ALTERATIONS, or during movement of irradiated fuel assemblies in secondary containment.

ACTIONS

A.1

If secondary containment is inoperable, it must be restored to OPERABLE status within 4 hours. The 4 hour Completion Time provides a period of time to correct the problem that is commensurate with the importance of maintaining secondary containment during MODES 1, 2, and 3. This time period also ensures that the probability of an accident (requiring secondary containment OPERABILITY) occurring during periods where secondary containment is inoperable is minimal.

B.1 and B.2

If secondary containment cannot be restored to OPERABLE status within the required Completion Time, the plant must be brought to a MODE in which the LCO does not apply. To achieve this status, the plant must be brought to at least MODE 3 within 12 hours and to MODE 4 within 36 hours. The allowed Completion Times are reasonable, based on operating experience, to reach the required plant conditions from full power conditions in an orderly manner and without challenging plant systems.

BASES

ACTIONS (continued)

C.1, C.2, and C.3

Movement of irradiated fuel assemblies in the secondary containment, CORE ALTERATIONS, and OPDRVs can be postulated to cause fission product release to the secondary containment. In such cases, the secondary containment is the only barrier to release of fission products to the environment. CORE ALTERATIONS and movement of irradiated fuel assemblies must be immediately suspended if the secondary containment is inoperable.

Suspension of these activities shall not preclude completing an action that involves moving a component to a safe position. Also, action must be immediately initiated to suspend OPDRVs to minimize the probability of a vessel draindown and subsequent potential for fission product release. Actions must continue until OPDRVs are suspended.

Required Action C.1 has been modified by a Note stating that LCO 3.0.3 is not applicable. If moving irradiated fuel assemblies while in MODE 4 or 5, LCO 3.0.3 would not specify any action. If moving irradiated fuel assemblies while in MODE 1, 2, or 3, the fuel movement is independent of reactor operations. Therefore, in either case, inability to suspend movement of irradiated fuel assemblies would not be a sufficient reason to require a reactor shutdown.

SURVEILLANCE REQUIREMENTS

SR 3.6.4.1.1

This SR ensures that the secondary containment boundary is sufficiently leak tight to preclude exfiltration under expected wind conditions. The 24 hour Frequency of this SR was developed based on operating experience related to secondary containment vacuum variations during the applicable MODES and the low probability of a DBA occurring between surveillances.

Furthermore, the 24 hour Frequency is considered adequate in view of other indications available in the control room, including alarms, to alert the operator to an abnormal secondary containment vacuum condition.

BASES

SURVEILLANCE REQUIREMENTS (continued)

SR 3.6.4.1.2 and SR 3.6.4.1.3

Verifying that secondary containment equipment hatches and access doors are closed ensures that the infiltration of outside air of such a magnitude as to prevent maintaining the desired negative pressure does not occur. Verifying that all such openings are closed provides adequate assurance that exfiltration from the secondary containment will not occur. Maintaining secondary containment OPERABILITY requires verifying each door in the access opening is closed, except when the access opening is being used for normal transient entry and exit (then, at least one door must remain closed). The 31 day Frequency for these SRs has been shown to be adequate, based on operating experience, and is considered adequate in view of the other indications of door and hatch status that are available to the operator.

SR 3.6.4.1.4 and SR 3.6.4.1.5

The SGT System exhausts the secondary containment atmosphere to the environment through appropriate treatment equipment. To ensure that all fission products are treated, SR 3.6.4.1.4 verifies that the SGT System will rapidly establish and maintain a pressure in the secondary containment that is less than the lowest postulated pressure external to the secondary containment boundary. This is confirmed by demonstrating that one SGT subsystem will draw down the secondary containment to $\geq$ 6.4 mm of water gauge vacuum in $\leq$ 20 minutes. This cannot be accomplished if the secondary containment boundary is not intact. SR 3.6.4.1.5 demonstrates that one SGT subsystem can maintain $\geq$ 6.4 mm of water gauge vacuum for 1 hour at a flow rate $\leq$ 6800 m^3/h. The 1 hour test period allows secondary containment to be in thermal equilibrium at steady state conditions. Therefore, these two tests are used to ensure secondary containment boundary integrity. Since these SRs are secondary containment tests, they need not be performed with each SGT subsystem. The SGT subsystems are tested on a STAGGERED TEST BASIS, however, to ensure that in addition to the requirements of LCO 3.6.4.3, either SGT subsystem will perform this test. The 18 month Frequency is based on the need to perform this Surveillance under the conditions that apply during a plant outage and the potential for an unplanned transient if the Surveillance were performed with the reactor at power. Operating experience has shown these components usually pass the Surveillance when performed at the 18 month Frequency. Therefore, the Frequency was concluded to be acceptable from a reliability standpoint.

BASES

REFERENCES

1. DCD Tier 2, Section 15.6.5.

2. DCD Tier 2, Section 15.7.4.

B 3.6 CONTAINMENT SYSTEMS

B 3.6.4.2 Secondary Containment Isolation Valves (SCIVs)

BASES

BACKGROUND

The function of the SCIVs, in combination with other accident mitigation systems, is to limit fission product release during and following postulated Design Basis Accidents (DBAs) (Ref. 1). Secondary containment isolation within the time limits specified for those isolation valves designed to close automatically ensures that fission products that leak from primary containment following a DBA, or that are released during certain operations when primary containment is not required to be OPERABLE, or take place outside primary containment, are maintained within applicable limits.

The OPERABILITY requirements for SCIVs help ensure that adequate secondary containment leak tightness is maintained during and after an accident by minimizing potential paths to the environment. These isolation devices consist of either passive devices or active (automatic) devices. Manual valves, de-activated automatic valves secured in their closed position (including check valves with flow through the valve secured), and blind flanges are considered passive devices.

Automatic SCIVs close on a secondary containment isolation signal to prevent leakage of untreated radioactive material from secondary containment following a DBA or other accidents.

Other penetrations are isolated by the use of valves in the closed position or blind flanges.

APPLICABLE SAFETY ANALYSES

The SCIVs must be OPERABLE to ensure the secondary containment is a leak tight barrier to fission product releases. The principal accidents for which the secondary containment leak tightness is required are a loss of coolant accident (Ref. 1), and a fuel handling accident inside secondary containment (Ref. 2). The secondary containment performs no active function in response to either of these limiting events, but its leak tightness is required to ensure that leakage from the primary containment is processed by the Standby Gas Treatment (SGT) System before being released to the environment.

BASES

APPLICABLE SAFETY ANALYSES (continued)

Maintaining SCIVs OPERABLE with isolation times within limits ensures that fission products will remain trapped inside secondary containment so that they can be treated by the SGT System prior to discharge to the environment.

SCIVs satisfy Criterion 3 of the NRC Policy Statement.

LCO

SCIVs form a part of the secondary containment boundary. The SCIV safety function is related to control of offsite radiation releases resulting from DBAs.

The automatic power operated isolation valves are considered OPERABLE when their isolation times are within limits and the valves actuate on an automatic isolation signal. The valves covered by this LCO, along with their associated stroke times, are listed in Reference 3.

The normally closed isolation valves or blind flanges are considered OPERABLE when manual valves are closed, automatic valves are de-activated and secured in their closed position, and blind flanges are in place. These passive isolation valves or devices are listed in Reference 3.

APPLICABILITY

In MODES 1, 2, and 3, a DBA could lead to a fission product release to the primary containment that leaks to the secondary containment. Therefore, the OPERABILITY of SCIVs is required.

In MODES 4 and 5, the probability and consequences of these events are reduced due to pressure and temperature limitations in these MODES. Therefore, maintaining SCIVs OPERABLE is not required in MODE 4 or 5, except for other situations under which significant radioactive releases can be postulated, such as during operations with a potential for draining the reactor vessel (OPDRVs), during CORE ALTERATIONS, or during movement of irradiated fuel assemblies in the secondary containment. Moving irradiated fuel assemblies in the secondary containment may also occur in MODES 1, 2, and 3.

BASES

ACTIONS

The ACTIONS are modified by three Notes. The first Note allows penetration flow paths to be unisolated intermittently under administrative controls. These controls consist of stationing a dedicated operator, who is in continuous communication with the control room, at the controls of the valve. In this way, the penetration can be rapidly isolated when a need for secondary containment isolation is indicated.

The second Note provides clarification that for the purpose of this LCO separate Condition entry is allowed for each penetration flow path.

The third Note ensures appropriate remedial actions are taken, if necessary, if the affected system(s) are rendered inoperable by an inoperable SCIV.

A.1 and A.2

In the event that there are one or more penetration flow paths with one SCIV inoperable, the affected penetration flow path(s) must be isolated. The method of isolation must include the use of at least one isolation barrier that cannot be adversely affected by a single active failure. Isolation barriers that meet this criterion are a closed and de-activated automatic SCIV, a closed manual valve, and a blind flange. For penetrations isolated in accordance with Required Action A.1, the valve used to isolate the penetration should be the closest available valve to secondary containment. The Required Action must be completed within the 8 hour Completion Time. The specified time period is reasonable considering the time required to isolate the penetration, and the probability of a DBA, which requires the SCIVs to close, occurring during this short time, is very low.

For affected penetrations that have been isolated in accordance with Required Action A.1, the affected penetration must be verified to be isolated on a periodic basis. This is necessary to ensure that secondary containment penetrations required to be isolated following an accident, but no longer capable of being automatically isolated, will be in the isolation position should an event occur. The Completion Time of once per 31 days is appropriate because the valves are operated under administrative controls and the probability of their misalignment is low. This Required Action does not require any testing or valve manipulation. Rather, it involves verification that the affected penetration remains isolated.

BASES

ACTIONS

A.1 and A.2 (continued)

Required Action A.2 is modified by a Note that applies to valves and blind flanges located in high radiation areas and allows them to be verified closed by use of administrative controls. Allowing verification by administrative controls is considered acceptable, since access to these areas is typically restricted. Therefore, the probability of misalignment of these valves, once they have been verified to be in the proper position, is low.

B.1

With two SCIVs in one or more penetration flow paths inoperable, the affected penetration flow path must be isolated within 4 hours. The method of isolation must include the use of at least one isolation barrier that cannot be adversely affected by a single active failure. Isolation barriers that meet this criterion are a closed and de-activated automatic valve, a closed manual valve, and a blind flange. The 4 hour Completion Time is reasonable, considering the time required to isolate the penetration and the probability of a DBA, which requires the SCIVs to close, occurring during this short time, is very low.

The Condition has been modified by a Note stating that Condition B is only applicable to penetration flow paths with two isolation valves. This clarifies that only Condition A is entered if one SCIV is inoperable in each of two penetrations.

C.1 and C.2

If any Required Action and associated Completion Time cannot be met, the plant must be brought to a MODE in which the LCO does not apply. To achieve this status, the plant must be brought to at least MODE 3 within 12 hours and to MODE 4 within 36 hours. The allowed Completion Times are reasonable, based on operating experience, to reach the required plant conditions from full power conditions in an orderly manner and without challenging plant systems.

BASES

ACTIONS (continued)

D.1, D2, and D.3

If any Required Action and associated Completion Time cannot be met, the plant must be placed in a condition in which the LCO does not apply. If applicable, CORE ALTERATIONS and the movement of irradiated fuel assemblies in the secondary containment must be immediately suspended. Suspension of these activities shall not preclude completion of movement of a component to a safe position. Also, if applicable, actions must be immediately initiated to suspend OPDRVs in order to minimize the probability of a vessel draindown and the subsequent potential for fission product release. Actions must continue until OPDRVs are suspended.

Required Action D.1 has been modified by a Note stating that LCO 3.0.3 is not applicable. If moving irradiated fuel assemblies while in MODE 4 or 5, LCO 3.0.3 would not specify any action. If moving fuel while in MODE 1, 2, or 3, the fuel movement is independent of reactor operations. Therefore, in either case, inability to suspend movement of irradiated fuel assemblies would not be a sufficient reason to require a reactor shutdown.

SURVEILLANCE REQUIREMENTS

SR 3.6.4.2.1

This SR verifies that each secondary containment manual isolation valve and blind flange that is required to be closed during accident conditions is closed. The SR helps to ensure that post accident leakage of radioactive fluids or gases outside of the secondary containment boundary is within design limits. This SR does not require any testing or valve manipulation. Rather, it involves verification that those valves in secondary containment that are capable of being mispositioned are in the correct position. Since these valves are readily accessible to personnel during normal unit operation and verification of their position is relatively easy, the 31 day Frequency was chosen to provide added assurance that the valves are in the correct positions.

Two Notes have been added to this SR. The first Note applies to valves and blind flanges located in high radiation areas and allows them to be verified by use of administrative controls. Allowing verification by administrative controls is considered acceptable, since access to these areas is typically restricted during MODES 1, 2, and 3 for ALARA reasons. Therefore, the probability of misalignment of these valves, once they have been verified to be in the proper position, is low.

A second Note has been included to clarify that SCIVs that are open under administrative controls are not required to meet the SR during the time the valves are open.

BASES

SURVEILLANCE REQUIREMENTS (continued)

SR 3.6.4.2.2

Verifying that the isolation time of each power operated and each automatic SCIV is within limits is required to demonstrate OPERABILITY. The isolation time test ensures that the valve will isolate in a time period less than or equal to that assumed in the safety analyses. The isolation time and Frequency of this SR is 92 days.

SR 3.6.4.2.3

Verifying that each automatic SCIV closes on a secondary containment isolation signal is required to prevent leakage of radioactive material from secondary containment following a DBA or other accidents. This SR ensures that each automatic SCIV will actuate to the isolation position on a secondary containment isolation signal. The applicable SRs in LCO 3.3.1.1 and LCO 3.3.1.4 overlap this SR to provide complete testing of the safety function. The 18 month Frequency is based on the need to perform this Surveillance under the conditions that apply during a plant outage and the potential for an unplanned transient if the Surveillance were performed with the reactor at power. Operating experience has shown these components usually pass the Surveillance when performed at the 18 month Frequency. Therefore, the Frequency was concluded to be acceptable from a reliability standpoint.

REFERENCES

1. DCD Tier 2, Section 15.6.5.
2. DCD Tier 2, Section 15.7.4.
3. DCD Tier 2, Section 6.2.

B 3.6 CONTAINMENT SYSTEMS

B 3.6.4.3 Standby Gas Treatment (SGT) System

BASES

BACKGROUND

The SGT System is required by 10 CFR 50, Appendix A, GDC 41, "Containment Atmosphere Cleanup" (Ref. 1). The function of the SGT System is to ensure that radioactive materials that leak from the primary containment into the secondary containment following a Design Basis Accident (DBA) are filtered and adsorbed prior to exhausting to the environment.

The SGT System consists of the following components:

a. Two 100 percent capacity charcoal filter trains, each consisting of (components listed in order of air flow direction):

   1. a moisture separator;

   2. an electric heater;

   3. a prefilter;

   4. a pre-high efficiency particulate air (HEPA) filter;

   5. a space heater;

   6. a charcoal adsorber;

   7. a space heater;

   8. a post-HEPA filter; and

b. Two fully redundant subsystems, each with its own ductwork, flow element, dampers, and instrumentation controls, consisting of:

   1. a process fan and

   2. a cooling fan.

The sizing of the SGT System equipment and components is based on the results of an infiltration analysis, as well as an exfiltration analysis of the secondary containment. The internal pressure of the SGT System boundary region is maintained at a negative pressure of 6.4 mm water gauge relative to the outdoor atmosphere when the system is in

BASES

BACKGROUND (continued)

operation, which represents the internal pressure required to ensure zero exfiltration of air from the building when exposed to an 8.9 m/s wind blowing at an angle of 45° to the building. The continuous negative differential pressure is established within 20 minutes after SGT System initiation.

The moisture separator is provided to remove entrained water in the air, while the electric heater reduces the relative humidity of the influent airstream to the adsorber section of the filter train to less than 70% whenever SGT System is in operation (Ref. 2). The prefilter removes large particulate matter, while the HEPA filter removes fine particulate matter and protects the charcoal from fouling. The charcoal adsorber removes all forms of iodine (elemental, organic, particulate, and hydrogen iodine), and the final HEPA filter collects any carbon fines exhausted from the charcoal adsorber.

The SGT System automatically starts and operates in response to actuation signals. Following initiation, both SGT System train process fans start. Upon verification that both trains are operating, one of the redundant trains is manually shut down.

APPLICABLE SAFETY ANALYSES

The design basis for the SGT System is to mitigate the consequences of a loss of coolant accident (Ref. 3) and fuel handling accidents (Ref. 4). For all events analyzed, the SGT System is shown to be automatically initiated to reduce, via filtration and adsorption, the radioactive material released to the environment.

The SGT System satisfies Criterion 3 of the NRC Policy Statement.

LCO

Following a DBA, a minimum of one SGT System train is required to maintain the secondary containment at the required negative pressure with respect to the surrounding spaces within 20 minutes of its initiation, and to process gaseous releases. Meeting the LCO requirements for two OPERABLE trains ensures operation of at least one SGT System train in the event of a single active failure.

APPLICABILITY

In MODES 1, 2, and 3, a DBA could lead to a fission product release to primary containment that leaks to secondary containment. Therefore, SGT System OPERABILITY is required during these MODES.

In MODES 4 and 5, the probability and consequences of these events are reduced due to the pressure and temperature limitations in these

BASES

APPLICABILITY (continued)

MODES. Therefore, maintaining the SGT System in OPERABLE status is not required in MODE 4 or 5, except for other situations under which significant releases of radioactive material can be postulated, such as during operations with a potential for draining the reactor vessel (OPDRVs), during CORE ALTERATIONS, or during movement of irradiated fuel assemblies in the secondary containment.

ACTIONS

A.1

With one SGT train inoperable, the inoperable train must be restored to OPERABLE status in 7 days. In this Condition, the remaining OPERABLE SGT train is adequate to perform the required radioactivity release control function. However, the overall system reliability is reduced because a single active failure in the OPERABLE train could result in the radioactivity release control function not being adequately performed. The 7 day Completion Time is based on consideration of such factors as the availability of the OPERABLE redundant SGT System train and the low probability of a DBA occurring during this period.

B.1

If both SGT System trains are inoperable in MODE 1, 2, or 3, the SGT System may not be capable of supporting the required radioactivity release control function. Therefore, actions are required consistent with that required for an inoperable secondary containment.

C.1 and C.2

If the SGT System train(s) cannot be restored to OPERABLE status within the required Completion Time in MODE 1, 2, or 3, the plant must be brought to a MODE in which the LCO does not apply. To achieve this status, the plant must be brought to at least MODE 3 within 12 hours and to MODE 4 within 36 hours. The allowed Completion Times are reasonable, based on operating experience, to reach the required plant conditions from full power conditions in an orderly manner and without challenging plant systems.

BASES

ACTIONS (continued)

D.1, D.2.1, D.2.2, and D.2.3

During movement of irradiated fuel assemblies, in the secondary containment, during CORE ALTERATIONS, or during OPDRVs, when Required Action A.1 cannot be completed within the required Completion Time, the OPERABLE SGT System train should immediately be placed in operation. This action ensures that the remaining train is OPERABLE, that no failures that could prevent automatic actuation have occurred, and that any other failure would be readily detected.

An alternative to Required Action D.1 is to immediately suspend activities that represent a potential for releasing radioactive material to the secondary containment, thus placing the plant in a condition that minimizes risk. If applicable, CORE ALTERATIONS and movement of irradiated fuel assemblies must immediately be suspended. Suspension of these activities must not preclude completion of movement of a component to a safe position. Also, if applicable, actions must immediately be initiated to suspend OPDRVs in order to minimize the probability of a vessel draindown and subsequent potential for fission product release. Actions must continue until OPDRVs are suspended.

The Required Actions of Condition D have been modified by a Note stating that LCO 3.0.3 is not applicable. If moving irradiated fuel assemblies while in MODE 4 or 5, LCO 3.0.3 would not specify any action. If moving irradiated fuel assemblies while in MODE 1, 2, or 3, the fuel movement is independent of reactor operations. Therefore, in either case, inability to suspend movement of irradiated fuel assemblies would not be a sufficient reason to require a reactor shutdown.

E.1, E.2, and E.3

When both SGT System trains are inoperable, if applicable, CORE ALTERATIONS and movement of irradiated fuel assemblies in secondary containment must be immediately suspended. Suspension of these activities shall not preclude completion of movement of a component to a safe position. Also, if applicable, actions must be immediately be initiated to suspend OPDRVs in order to minimize the probability of a vessel draindown and subsequent potential for fission product release. Actions must continue until OPDRVs are suspended.

Required Action E.1 has been modified by a Note stating that LCO 3.0.3 is not applicable.

BASES

SURVEILLANCE REQUIREMENTS

SR 3.6.4.3.1

Operating each SGT System for ≥ 10 continuous hours ensures that both trains are OPERABLE and that all associated controls are functioning properly. It also ensures that blockage, fan or motor failure, or excessive vibration can be detected for corrective action. Operation with the heaters on (automatic heater cycling to maintain temperature) for ≥ 10 continuous hours every 31 days eliminates moisture on the adsorbers and HEPA filters. The 31 day Frequency was developed in consideration of the known reliability of fan motors and controls and the redundancy available in the system.

SR 3.6.4.3.2

This SR verifies that the required SGT System filter testing is performed in accordance with the Ventilation Filter Testing Program (VFTP). The SGT System filter tests are in accordance with Regulatory Guide 1.52 (Ref. 5). The VFTP includes testing HEPA filter performance, charcoal adsorber efficiency, minimum system flow rate, and the physical properties of the activated charcoal (general use and following specific operations). Specified test frequencies and additional information are discussed in detail in the VFTP.

SR 3.6.4.3.3

This SR requires verification that each SGT train starts upon receipt of an actual or simulated initiation signal. The applicable SRs in LCO 3.3.1.1 and LCO 3.3.1.4 overlap this SR to provide complete testing of the safety function. While this Surveillance can be performed with the reactor at power, operating experience has shown these components usually pass the Surveillance when performed at the 18 month Frequency, which is based on the refueling cycle. Therefore, the Frequency was concluded to be acceptable from a reliability standpoint.

SR 3.6.4.3.4

This SR requires verification that the SGT System filter cooler bypass damper can be opened and the fan started. This ensures that the ventilation mode of SGT System operation is available. While this Surveillance can be performed with the reactor at power, operating experience has shown these components usually pass the Surveillance when performed at the 18 month Frequency, which is based on the refueling cycle. Therefore, the Frequency was concluded to be acceptable from a reliability standpoint.

BASES

REFERENCES

1. 10 CFR 50, Appendix A, GDC 41.
2. DCD Tier 2, Section 6.5.1.
3. DCD Tier 2, Section 15.6.5.
4. DCD Tier 2, Section 15.7.4.
5. Regulatory Guide 1.52, Rev. 2.

B 3.7 PLANT SYSTEMS

B 3.7.1 Reactor Building Cooling Water (RCW) System, Reactor Service Water (RSW) System, and Ultimate Heat Sink (UHS)–Operating

BASES

BACKGROUND

The RCW and RSW Systems are designed to provide cooling water for the removal of heat from unit auxiliaries, such as Residual Heat Removal (RHR) System heat exchangers, standby diesel generators (DGs), and room coolers for Emergency Core Cooling System equipment required for a safe reactor shutdown following a Design Basis Accident (DBA) or transient. The RCW/RSW System also provides cooling to unit components, as required, during normal shutdown and reactor isolation modes. During a DBA, most, but not all, equipment required for normal operation only is isolated from the RCW/RSW System, and cooling is directed to selected non-essential equipment such as control rod drive (CRD) pump oil coolers, instrument and service air compressor coolers, reactor water cleanup (CUW) pump coolers and to safety related equipment. All non-essential equipment can be manually isolated if required. During all plant operating modes, all RCW/RSW divisions have at least one pump operating and, therefore, if a LOCA occurs the RCW/RSW systems will already be in operation.

The combined RCW/RSW system includes three separate divisions (A, B and C). Each division consists of the ultimate heat sink (UHS), an independent cooling water header, an independent service water loop, and the associated pumps, heat exchangers, piping, valves and instrumentation. Each division includes two RCW pumps, two RSW pumps and three RCW to RSW heat exchangers. Each division is sized to provide sufficient cooling capacity to support the required safety-related systems in its respective division during safe shutdown of the unit following a loss-of-coolant accident (LOCA).

The UHS includes a dedicated water storage basin for each unit. The UHS consists of three mechanically and electrically independent cooling tower divisions designed to remove heat from the respective RCW/RSW division. Each unit's UHS structure consists of six cooling tower cells, of which two cells are dedicated to each of the three UHS divisions. During normal plant operation, all three divisions are in service with one cooling tower cell per division in operation. Each unit's UHS basin is sized such that sufficient water inventory is available for all RCW/RSW System post LOCA cooling requirements for a 30 day period with no external makeup water source available (Regulatory Guide 1.27, Ref. 1). Normal makeup for each UHS basin is provided automatically by the onsite well water.

BASES

BACKGROUND (continued)

Cooling water is pumped from the UHS basin by the RSW pump(s) to the RCW/RSW heat exchangers through the three main redundant supply headers (Divisions A, B and C). In a separate closed loop, cooling water is circulated by the pump(s) in each RCW division through the essential components to be cooled and back through the RCW/RSW heat exchangers. Thus, the heat removed from the components by the RCW is transferred to the RSW, and then ultimately rejected to the UHS.

Divisions A, B and C supply cooling water to redundant equipment required for a safe reactor shutdown. Additional information on the design and operation of the RCW/RSW System and UHS along with the specific equipment for which the RCW/RSW System supplies cooling water is provided in Sections 9.2.11 and 9.2.15 and Tables 9.2-4A, B, and C (Refs. 2 and 3, respectively). The combined three division RCW/RSW System is designed to withstand a single active or passive failure coincident with a loss of offsite power, without losing the capability to supply adequate cooling water to equipment required for safe reactor shutdown.

Following a DBA or transient, the RCW/RSW System and UHS cooling tower fans will operate automatically without operator action. Manual initiation of supported systems is, however, performed for some cooling operations (e.g., shutdown cooling).

APPLICABLE SAFETY ANALYSES

The volume of water incorporated in the UHS is sized so that sufficient water inventory is available for all RCW/RSW System post LOCA cooling requirements for a 30 day period with no additional makeup water source available (Ref. 1). The ability of the RCW/RSW System to support long term cooling of the reactor or containment is assumed in evaluations of the equipment required for safe reactor shutdown presented in DCD Tier 2, Sections 9.2.11, 9.2.15, 6.2.1.1.3.3.1.4, and Chapter 15, (Refs. 2, 4, and 5, respectively). These analyses include the evaluation of the long term primary containment response after a design basis LOCA. The RCW/RSW System provides cooling water for the RHR suppression pool cooling mode to limit suppression pool temperature and primary containment pressure following a LOCA. This ensures that the primary containment can perform its intended function of limiting the release of radioactive materials to the environment following a LOCA. The RCW/RSW System also provides cooling to other components assumed to function during a LOCA (e.g., RHR). Also, the ability to provide onsite emergency AC power is dependent on the ability of the RCW/RSW System to cool the DGs.

BASES

APPLICABLE SAFETY ANALYSES (continued)

The safety analyses for long term containment cooling were performed, as discussed in the DCD Tier 2, Sections 6.2.1.1.3.3.1.4 and 6.2.2.3 (Refs. 4 and 6, respectively), for a LOCA, concurrent with a loss of offsite power, and minimum available DG power. The worst case single failure affecting the performance of the RCW/RSW System is the failure of one of the three standby DGs, which would in turn affect one of the three RCW/RSW divisions and cause failure of a RHR heat exchanger as assumed in the safety analysis. Reference 2 discusses RCW/RSW System performance during these conditions.

The combined RCW/RSW System, together with the UHS, satisfy Criterion 3 of the NRC Policy Statement.

LCO

The OPERABILITY of Divisions A, B and C of the RCW/RSW System is required to ensure the effective operation of the RHR System in removing heat from the reactor, and the effective operation of other safety related equipment during a DBA or transient. Requiring all three divisions to be OPERABLE ensures that two divisions will be available to provide adequate capability to meet cooling requirements of the equipment required for safe shutdown in the event of a single failure.

A division is considered OPERABLE when:

a. All four associated RCW/RSW pumps are OPERABLE;

b. All three RCW/RSW heat exchangers are OPERABLE;

c. The associated UHS with two cooling tower cells is OPERABLE; and

d. The associated piping, valves, instrumentation, and controls required to perform the safety related function are OPERABLE.

OPERABILITY of the UHS is based on a maximum RSW water temperature of 32.2°C at the inlet to the RCW/RSW heat exchangers with OPERABILITY of each division requiring a minimum water level at or above elevation 23.55 m MSL (equivalent to an indicated level of 19.28 m) and six OPERABLE cooling tower cells. The maximum RSW water temperature of 32.2°C will insure that the peak temperature at the inlet to the RCW/RSW heat exchangers will not exceed the designed value of 35°C during a LOCA.

The isolation of the RCW/RSW System to components or systems may render those components or systems inoperable, but does not affect the OPERABILITY of the RCW/RSW System.

BASES

APPLICABILITY

In MODES 1, 2, and 3, the RCW/RSW System and UHS are required to be OPERABLE to support OPERABILITY of the equipment serviced by the RCW/RSW System and UHS, and are required to be OPERABLE in these MODES.

In MODES 4 and 5, the OPERABILITY requirements of the RCW/RSW System and UHS are specified in LCOs 3.7.2, “RCW/RSW and UHS-Shutdown” and 3.7.3, “RCW/RSW and UHS-Refueling”.

ACTIONS

A.1

If one RCW pump and/or one RSW pump and/or one RCW/RSW heat exchanger and/or one cooling tower cell in the UHS in the same division is inoperable, action must be taken to restore the inoperable component(s), and thus the division affected, to OPERABLE status within 14 days. In this condition sufficient equipment is still available to provide cooling water to the required safety related components and sufficient heat removal capacity is still available to adequately cool safety related loads, even assuming the worst case single failure. Therefore, continued operation for a limited time is justified.

The 14-day Completion Time is reasonable, based on the low probability of an accident occurring during the 14 days that one or more components are inoperable in one division, the number of available redundant divisions, the substantial cooling capability still remaining in a division in this Condition, and the expected high division availability afforded by a system where most of the equipment, including the minimum required for most functions, is normally operating. This Completion Time is also based on PRA sensitivity studies (Ref. 8).

B.1 and B.2

If one RCW/RSW division or both cooling tower cells in one UHS division is inoperable for reasons other than Condition A, then, immediately, those required feature(s) supported by the inoperable RCW/RSW division must be declared inoperable (e.g., Emergency Diesel Generator, RHR heat exchanger, etc.) and the applicable Conditions and Required Actions of the appropriate LCOs for the inoperable required feature(s) must be entered. For example, applicable Conditions of LCO 3.8.1, “AC Sources-Operating,” LCO 3.4.7, “Residual Heat Removal (RHR) Shutdown Cooling System-Hot Shutdown,” LCO 3.4.1, “Reactor Internal Pumps (RIP) Operating,” LCO 3.6.1.5, “Drywell Air Temperature”, LCO 3.6.2.3, “Suppression Pool Cooling,” and LCO 3.6.2.4, “Containment Spray” be

BASES

ACTIONS (continued)

B.1 and B.2 (continued)

entered and the Required Actions taken if the inoperable RCW/RSW division results in an inoperable DG, RHR shutdown cooling, RIPS, drywell temperature increase due to inoperable drywell coolers, RHR suppression pool cooling, and RHR containment spray, respectively. This is in accordance with LCO 3.0.6 and ensures the proper actions are taken for these components.

Additionally, immediate action must be taken to restore the inoperable RCW/RSW division or UHS cooling tower cells to OPERABLE status. This is consistent with the Required Actions of the applicable LCOs for those support feature(s) declared inoperable as a result of the inoperable RCW/RSW division.

C.1

If one RCW pump and/or one RSW pump and/or one RCW/RSW heat exchanger and/or one UHS cooling tower cell in the same division is inoperable in two or more separate divisions, one RCW/RSW or UHS cooling tower division must be restored to OPERABLE status within 7 days. In this condition sufficient equipment is still available to provide cooling water to the required safety related components and sufficient heat removal capacity is still available to adequately cool safety related loads. Therefore, continued operation for a limited time is justified. However, in the degraded mode of this Condition, overall reliability and heat removal capability is reduced from that of Condition A, and thus a more restrictive Completion Time is imposed.

The 7 day Completion Time is reasonable, based on the low probability of an accident occurring during the period that one or more redundant components are inoperable in one or more divisions, the number of available redundant divisions, the substantial cooling capability still remaining in divisions in this Condition, and the expected high division availability afforded by a system where most of the equipment, including the minimum required for most functions, is normally operating. The Completion Time is also based on PRA sensitivity studies (Ref. 8).

BASES

ACTIONS (continued)

D.1 and D.2

If the RCW/RSW division cannot be restored to OPERABLE status within the associated Completion Time, or two or more RCW/RSW divisions are inoperable for reasons other than Condition C, or the UHS is determined inoperable, or two or more UHS cooling tower divisions are inoperable for reasons other than Condition C, the unit must be placed in a MODE in which the LCO does not apply. To achieve this status, the unit must be placed in at least MODE 3 within 12 hours and in MODE 4 within 36 hours. The allowed Completion Times are reasonable, based on operating experience, to reach the required unit conditions from full power conditions in an orderly manner and without challenging unit systems.

SURVEILLANCE REQUIREMENTS

SR 3.7.1.1

This SR ensures adequate long term (30 days) cooling can be maintained. With the UHS water source below the minimum level, the affected RCW/RSW division must be declared inoperable. The 24 hour Frequency is based on operating experience related to trending of the parameter variations during the applicable MODES.

SR 3.7.1.2

This SR verifies the water level in the UHS basin to be sufficient for the proper operation of the RSW pumps (net positive suction head and pump vortexing are considered in determining this limit). The 24 hour Frequency is based on operating experience related to trending of the parameter variations during the applicable MODES.

SR 3.7.1.3

Verification of the RSW water temperature at the inlet to the RCW/RSW heat exchanger ensures that the heat removal capability of the RCW/RSW System is within the assumptions of the DBA analysis. The 24 hour Frequency is based on operating experience related to trending of the parameter variations during the applicable MODES.

SR 3.7.1.4

Operating each cooling tower cell fan for ≥ 15 minutes ensures that all fans are OPERABLE and that all associated controls are functioning properly. It also ensures that fan or motor failure, or excessive vibration can be detected for corrective action. The 31 day Frequency is based on

BASES

SURVEILLANCE REQUIREMENTS (continued)

SR 3.7.1.4 (continued)

operating experience, the known reliability of the fan units, the redundancy available, and the low probability of significant degradation of the cooling tower fans occurring between Surveillances.

SR 3.7.1.5

Verifying the correct alignment for each manual, power operated, and automatic valve in each RCW/RSW and associated UHS cooling tower division flow path provides assurance that the proper flow paths will exist for RCW/RSW operation. This SR does not apply to valves that are locked, sealed, or otherwise secured in position, since these valves were verified to be in the correct position prior to locking, sealing, or securing. A valve is also allowed to be in the nonaccident position and yet considered in the correct position, provided it can be automatically realigned to its accident position. This SR does not require any testing or valve manipulation; rather, it involves verification that those valves capable of potentially being mispositioned are in the correct position. This SR does not apply to valves that cannot be inadvertently misaligned, such as check valves.

This SR is modified by a Note indicating that isolation of the RCW/RSW System to components or systems may render those components or systems inoperable, but does not affect the OPERABILITY of the RCW/RSW System. As such, when all RCW/RSW pumps, valves, and piping are OPERABLE, but a branch connection off of the main header is isolated, the RCW/RSW System is still OPERABLE. The 31 day Frequency is based on engineering judgment, is consistent with the procedural controls governing valve operation, and ensures correct valve positions.

SR 3.7.1.6

This SR verifies the automatic isolation valves of the RCW/RSW System will automatically switch to the safety or emergency position to provide cooling water exclusively to the safety related equipment, and limited non-safety related equipment, during an accident event. This is demonstrated by use of an actual or simulated initiation signal. This SR also verifies the automatic start capability of the RCW/RSW pumps that are in standby and automatic valving in each of the standby RCW/RSW heat exchangers and associated UHS cooling tower cell in each division. SRs in LCO 3.3.1.1 and LCO 3.3.1.4 overlap this SR to provide complete testing of the safety function.

BASES

SURVEILLANCE REQUIREMENTS (continued)

SR 3.7.1.6 (continued)

Operating experience has shown that these components usually pass the SR when performed on the 18 month Frequency. Therefore, this Frequency is concluded to be acceptable from a reliability standpoint.

REFERENCES

1. Regulatory Guide 1.27, Revision 2, January 1976.
2. DCD Tier 2, Sections 9.2.11 and 9.2.15.
3. DCD Tier 2, Tables 9.2-4A, B, and C.
4. DCD Tier 2, Section 6.2.1.1.3.3.1.4.
5. DCD Tier 2, Chapter 15.
6. DCD Tier 2, Section 6.2.2.3.
7. DCD Tier 2, Section 19.3.1.3.
8. Letter, Jack Fox to Chet Poslusny, “Submittal Supporting Accelerated ABWR Review Schedule-ABWR CDF Sensitivity to ESF Equipment Out of Service”, Docket No. STN 52-001, July 27, 1993.

B 3.7 PLANT SYSTEMS

B 3.7.2 Reactor Building Cooling Water (RCW) System, Reactor Service Water (RSW) System and Ultimate Heat Sink (UHS) – Shutdown

BASES

BACKGROUND	A description of the RCW and RSW Systems and the UHS are provided in the Bases for LCO 3.7.1, "Reactor Building Cooling Water (RCW) System, Reactor Service Water (RSW) System and Ultimate Heat Sink (UHS) – Operating."
APPLICABLE SAFETY ANALYSES	The volume of water incorporated in the UHS is sized so that sufficient water inventory is available for all RCW/RSW System post LOCA cooling requirements for a 30 day period with no additional makeup water source available (Ref. 1). The ability of the RCW/RSW System to support long term cooling of the reactor or containment is assumed in evaluations of the equipment required for safe reactor shutdown presented in DCD Tier 2, Sections 9.2.11, 9.2.15, 6.2.1.1.3.3.1.4, and Chapter 15, (Refs 2, 3, and 4, respectively). The long term cooling analyses following a design basis LOCA demonstrates that only two divisions of the RCW/RSW System is required, post LOCA, to support long term cooling of the reactor or containment. To provide redundancy, a minimum of three RCW/RSW divisions are required to be OPERABLE in MODE 4 and MODE 5 with irradiated fuel in the reactor pressure vessel and water level < 7.0 m over the top of the reactor pressure vessel flange. The combined RCW/RSW System, together with the UHS, satisfy Criterion 3 of the NRC Policy Statement.
LCO	Three divisions of the RCW/RSW System and the UHS are required to be OPERABLE to ensure the effective operation of the RHR System in removing heat from the reactor, and the effective operation of other safety related equipment during a DBA or transient. Requiring three divisions to be OPERABLE ensures that two divisions will be available to provide adequate capability to meet cooling requirements of the equipment required for safe shutdown in the event of a single failure. Operability of the UHS and the RCW/RSW System is defined in the Basis for LCO 3.7.1. The Note allows one RCW/RSW division to be inoperable in MODE 5, and after 30 hours from initial entry into MODE 4 from MODE 3. After 30 hours into MODE 4 from MODE 3, reactor decay heat (assumed maximum at the end of a fuel cycle) has dropped sufficiently such that

BASES

LCO (continued)

only one RHR shutdown cooling subsystem can provide the required cooling to maintain the reactor in MODE 4 condition, and hence only two RCW/RSW divisions are required to be OPERABLE to provide redundancy.

APPLICABILITY

In MODE 4 and MODE 5, with irradiated fuel in the reactor pressure vessel and water level < 7.0 m over the top of the reactor pressure vessel flange, three divisions of the RCW/RSW System and the UHS are required to be OPERABLE to support OPERABILITY of the equipment serviced by the RCW/RSW System and UHS, and are required to be OPERABLE in these MODES.

In MODES 1, 2, and 3, the OPERABILITY requirements of the RCW/RSW System and UHS are specified in LCO 3.7.1.

In MODE 5 with irradiated fuel in the reactor pressure vessel and water level ≥ 7.0 m over the top of the reactor pressure vessel flange, the OPERABILITY requirements of the RCW/RSW System and UHS are specified in LCO 3.7.3, “RCW/RSW System and UHS – Refueling.”

ACTIONS

A. 1 and B. 1

If one RCW pump and/or one RSW pump and/or one RCW/RSW heat exchanger and/or one cooling tower cell in the UHS in the same division is inoperable, action must be taken to restore the inoperable component(s) and thus the division affected, to OPERABLE status within 14 days. If one RCW pump and/or one RSW pump and/or one RCW/RSW heat exchanger and/or one UHS cooling tower cell in the same division is inoperable in two or more separate divisions, one RCW/RSW or UHS cooling tower cell division must be restored to OPERABLE status within 7 days. In these conditions sufficient redundant equipment is still available to provide cooling water to the required safety related components and sufficient heat removal capacity is still available to adequately cool safety related loads. Therefore, continued operability of these divisions is justified.

The Completion Times are reasonable, based on the low probability of an accident occurring while one or more components are inoperable in one or more divisions, the number of available divisions, the substantial cooling capability still remaining in a division(s) in this Condition, and the

BASES

ACTIONS

A. 1 and B. 1 (continued)

expected high division availability afforded by a system where most of the equipment, including the minimum required for most functions, is normally operating. However, in the degraded mode of Condition B, overall reliability and heat removal capability is reduced from that of Condition A, and thus a more restrictive Completion Time is imposed.

C.1

If the RCW/RSW or UHS cooling tower division(s) cannot be restored to OPERABLE status within the associated Completion Time(s), or one or more required RCW/RSW or UHS cooling tower division(s) are inoperable for reasons other than Condition A or B or the UHS is inoperable, then immediately, those required feature(s) supported by the inoperable RCW/RSW division(s) or the UHS must be declared inoperable (i.e., Emergency Diesel Generator, RHR heat exchanger) and the applicable Conditions and Required Actions of the appropriate LCOs for the inoperable required feature(s) must be entered. For the applicable shutdown MODES, an inoperable RCW/RSW division or UHS requires entering the Conditions of LCO 3.8.11, “AC Sources-Shutdown (Low Water Level),” for a diesel generator made inoperable and either LCO 3.4.8, “Residual Heat Removal (RHR) Shutdown Cooling System – Cold Shutdown,” or LCO 3.9.8, “Residual Heat Removal (RHR) Low Water Level” for RHR shutdown cooling made inoperable. This is in accordance with LCO 3.0.6 and ensures the proper actions are taken for these components.

SURVEILLANCE REQUIREMENTS

SR 3.7.2.1

This SR ensures adequate long term (30 days) cooling can be maintained. With the UHS water source below the minimum level, the must be declared inoperable. The 24 hour Frequency is based on operating experience related to trending of the parameter variations during the applicable MODES.

SR 3.7.2.2

This SR verifies the water level in the UHS basin to be sufficient for the proper operation of the RSW pumps (net positive suction head and pump vortexing are considered in determining this limit). The 24 hour Frequency is based on operating experience related to trending of the parameter variations during the applicable MODES.

BASES

SURVEILLANCE REQUIREMENTS (continued)

SR 3.7.2.3

Verification of the RSW water temperature at the inlet to the RCW/RSW heat exchangers ensures that the heat removal capability of the RCW/RSW System is within the assumptions of the DBA analysis.

SR 3.7.2.4

Operating each cooling tower cell fan for ≥ 15 minutes ensures that all fans are OPERABLE and that all associated controls are functioning properly. It also ensures that fan or motor failure, or excessive vibration can be detected for corrective action. The 31 day Frequency is based on operating experience, the known reliability of the fan units, the redundancy available, and the low probability of significant degradation of the cooling tower fans occurring between Surveillances.

SR 3.7.2.5

Verifying the correct alignment for each manual, power operated, and automatic valve in each RCW/RSW and associated UHS cooling tower division flow path provides assurance that the proper flow paths will exist for RCW/RSW operation. This SR does not apply to valves that are locked, sealed, or otherwise secured in position, since these valves were verified to be in the correct position prior to locking, sealing, or securing. A valve is also allowed to be in the nonaccident position and yet considered in the correct position, provided it can be automatically realigned to its accident position. This SR does not require any testing or valve manipulation; rather, it involves verification that those valves capable of potentially being mispositioned are in the correct position. This SR does not apply to valves that cannot be inadvertently misaligned, such as check valves.

This SR is modified by a Note indicating that isolation of the RCW/RSW System to components or systems may render those components or systems inoperable, but does not affect the OPERABILITY of the RCW/RSW System. As such, when all RCW/RSW pumps, valves, and piping are OPERABLE, but a branch connection off the main header is isolated, the RCW/RSW System is still OPERABLE. The 31 day Frequency is based on engineering judgement, is consistent with the procedural controls governing valve operation, and ensures correct valve positions.

BASES

SURVEILLANCE REQUIREMENTS (continued)

SR 3.7.2.6

This SR verifies that the automatic isolation valves of the RCW/RSW System will automatically switch to the safety or emergency position to provide cooling water exclusively to the safety related equipment, and limited non-safety related equipment, during an accident event. This is demonstrated by use of an actual or simulated initiation signal. This SR also verifies the automatic start capability of the RCW/RSW pumps that are in standby and automatic valving in each of the standby RCW/RSW heat exchangers and associated UHS cooling tower cell in each division. SRs in LCO 3.3.1.1 and LCO 3.3.1.4 overlap this SR to provide complete testing of the safety function.

Operating experience has shown that these components usually pass the SR when performed on the 18 month Frequency. Therefore, this Frequency is concluded to be acceptable from a reliability standpoint.

REFERENCES

1. Regulatory Guide 1.27, Revision 2, January 1976.
2. DCD Tier 2, Sections 9.2.11 and 9.2.15.
3. DCD Tier 2, Section 6.2.1.1.3.3.1.4.
4. DCD Tier 2, Chapter 15.

B 3.7 PLANT SYSTEMS

B 3.7.3 Reactor Building Cooling Water (RCW) System, Reactor Service Water (RSW) System and Ultimate Heat Sink (UHS) – Refueling

BASES

BACKGROUND	A description of the RCW and RSW Systems and the UHS are provided in the Bases for LCO 3.7.1, "Reactor Building Cooling Water (RCW) System, Reactor Service Water (RSW) System and Ultimate Heat Sink (UHS) – Operating." In MODE 5 with irradiated fuel in the reactor pressure vessel and the reactor vessel water level ≥ 7.0 m over the vessel flange the unit components to which the RCW/RSW System is required to supply cooling water is greatly reduced from normal operation. For example, LCO 3.8.2, "AC Sources – Refueling" and LCO 3.9.7, "RHR-High Water Level" require one DG and one RHR subsystem to be OPERABLE, respectively, and LCO 3.5.2, "ECCS-Shutdown" does not require any ECCS components to be OPERABLE for this condition.
APPLICABLE SAFETY ANALYSES	The volume of water incorporated in the UHS is sized so that sufficient water inventory is available for all RCW/RSW System post LOCA cooling requirements for a 30 day period with no additional makeup water source available (Ref. 1). The ability of the RCW/RSW System to support long term cooling of the reactor or containment is assumed in evaluations of the equipment required for safe reactor shutdown presented in DCD Tier 2, Sections 9.2.11, 9.2.15, 6.2.1.1.3.3.1.4, and Chapter 15, (Refs 2, 3, and 4, respectively). With the unit in MODE 5 with irradiated fuel in the reactor pressure vessel and water level ≥ 7.0 m over the top of the reactor pressure vessel flange, the volume of water in the reactor vessel provides a heat sink for decay heat removal. However, to provide redundancy, a minimum of one RCW/RSW division is required to be OPERABLE. The combined RCW/RSW System, together with the UHS, satisfies Criterion 3 of the NRC Policy Statement.
LCO	One division of the RCW/RSW System and the UHS are required to be OPERABLE to ensure the effective operation of the RHR System in removing heat from the reactor. LCO 3.9.7, "RHR – High Water Level" requires that one RHR subsystem be OPERABLE and in operation in MODE 5 with irradiated fuel in the reactor pressure vessel and with the water level ≥ 7.0 m above the RPV flange. Only one subsystem is required because the volume of water above the RPV flange provides backup decay heat removal capability. Operability of the UHS and the RCW/RSW System is defined in the Basis for LCO 3.7.1.

BASES

APPLICABILITY

In MODE 5 with irradiated fuel in the reactor pressure vessel and water level ≥ 7.0 m over the top of the reactor pressure vessel flange, one division of the RCW/RSW System and the UHS are required to be OPERABLE to support OPERABILITY of the equipment serviced by the RCW/RSW System and UHS, and are required to be OPERABLE in this MODE.

In MODES 1, 2, and 3, the OPERABILITY requirements of the RCW/RSW System and UHS are specified in LCO 3.7.1.

In MODE 4 and MODE 5 with water level < 7.0 m over the top of the reactor pressure vessel flange, the OPERABILITY requirements of the RCW/RSW System and UHS are specified in LCO 3.7.2, "RCW/RSW System and UHS – Shutdown."

ACTIONS

A. 1. and A. 2

If no RCW/RSW division is operable or the UHS is inoperable, or the associated UHS cooling tower cells are inoperable, then, immediately, those required feature(s) supported by the inoperable required RCW/RSW division or UHS must be declared inoperable (i.e., Emergency Diesel Generator, RHR heat exchanger) and the applicable Conditions and Required Actions of the appropriate LCOs for the inoperable required feature(s) must be entered. An inoperable RCW/RSW division or UHS requires entering the Conditions of LCO 3.8.2, "AC Sources – Refueling," for a diesel generator made inoperable and LCO 3.9.7, "Residual Heat Removal (RHR) – High Water Level" for RHR shutdown cooling made inoperable. This is in accordance with LCO 3.0.6 and ensures the proper actions are taken for these components.

SURVEILLANCE REQUIREMENTS

SR 3.7.3.1

This SR ensures adequate long term (30 days) cooling can be maintained. With the UHS water source below the minimum level, the affected RCW/RSW division must be declared inoperable. The 24 hour Frequency is based on operating experience related to trending of the parameter variations during the applicable MODES.

BASES

SURVEILLANCE REQUIREMENTS (continued)

SR 3.7.3.2

This SR verifies the water level in the UHS basin to be sufficient for the proper operation of the RSW pumps (net positive suction head and pump vortexing are considered in determining this limit). The 24 hour Frequency is based on operating experience related to trending of the parameter variations during the applicable MODES.

SR 3.7.3.3

Verification of the RSW water temperature at the inlet to the RCW/RSW heat exchangers ensures that the heat removal capability of the RCW/RSW System is within the assumptions of the DBA analysis. The 24 hour Frequency is based on operating experience related to trending of the parameter variations during the applicable MODES.

SR 3.7.3.4

Operating each cooling tower cell fan for ≥ 15 minutes ensures that all fans are OPERABLE and that all associated controls are functioning properly. It also ensures that fan or motor failure, or excessive vibration can be detected for corrective action. The 31 day Frequency is based on operating experience, the known reliability of the fan units, the redundancy available, and the low probability of significant degradation of the cooling tower fans occurring between Surveillances.

SR 3.7.3.5

Verifying the correct alignment for each manual, power operated, and automatic valve in each RCW/RSW and associated UHS cooling tower division flow path provides assurance that the proper flow paths will exist for RCW/RSW operation. This SR does not apply to valves that are locked, sealed, or otherwise secured in position, since these valves were verified to be in the correct position prior to locking, sealing, or securing. A valve is also allowed to be in the nonaccident position and yet considered in the correct position, provided it can be automatically realigned to its accident position. This SR does not require any testing or valve manipulation; rather, it involves verification that those valves capable of potentially being mispositioned are in the correct position. This SR does not apply to valves that cannot be inadvertently misaligned, such as check valves.

BASES

SURVEILLANCE REQUIREMENTS (continued)

SR 3.7.3.5 (continued)

This SR is modified by a Note indicating that isolation of the RCW/RSW System to components or systems may render those components or systems inoperable, but does not affect the OPERABILITY of the RCW/RSW System. As such, when all RCW/RSW pumps, valves, and piping are OPERABLE, but a branch connection off the main header is isolated, the RCW/RSW System is still OPERABLE.

The 31 day Frequency is based on engineering judgement, is consistent with the procedural controls governing valve operation, and ensures correct valve positions.

SR 3.7.3.6

This SR verifies that the automatic isolation valves of the RCW/RSW System will automatically switch to the safety or emergency position to provide cooling water exclusively to the safety related equipment, and limited non-safety related equipment, during an accident event. This is demonstrated by use of an actual or simulated initiation signal. This SR also verifies the automatic start capability of the RCW/RSW pumps that are in standby and automatic valving in each of the standby RCW/RSW heat exchangers and associated UHS cooling tower cell in each division. The SRs in LCO 3.3.1.1 and LCO 3.3.1.4 overlap this SR to provide complete testing of the safety function.

Operating experience has shown that these components usually pass the SR when performed on the 18 month Frequency. Therefore, this Frequency is concluded to be acceptable from a reliability standpoint.

REFERENCES

1. Regulatory Guide 1.27, Revision 2, January 1976.
2. DCD Tier 2, Sections 9.2.11 and 9.2.15.
3. DCD Tier 2, Section 6.2.1.1.3.3.1.4.
4. DCD Tier 2, Chapter 15.

B 3.7 PLANT SYSTEMS

B 3.7.4 Control Room Habitability Area (CRHA) – Emergency Filtration (EF) System

BASES

BACKGROUND

The Emergency Filtration System of the CRHA HVAC System, provides a radiologically controlled environment from which the unit can be safely operated following a Design Basis Accident (DBA).

The safety related function of the Emergency Filtration System used to control radiation exposure consists of two independent and redundant high efficiency air filtration divisions for treatment of a mixture of recirculated air and a minimum of outside air supplied for pressurization of the main control area envelope (MCAE). Each division consists of an electric heater, a prefilter, a high efficiency particulate air (HEPA) filter, an activated charcoal adsorber section, a second HEPA filter, two 100% capacity fans, and the associated ductwork and dampers. The electric heater limits the relative humidity of the influent air stream to less than 70% relative humidity. Prefilters and HEPA filters remove particulate matter that may be radioactive. The charcoal adsorbers provide a holdup period for gaseous iodine, allowing time for decay. The second HEPA filter collects any carbon fines exhausted from the adsorber.

Upon receipt of the initiation signal(s) (indicative of conditions that could result in radiation exposure to MCAE personnel), the Emergency Filtration System automatically switches to the high radiation mode of operation to prevent infiltration of contaminated air into the MCAE.

The Emergency Filtration System is designed to maintain the MCAE environment for a 30 day continuous occupancy after a DBA, without exceeding a 0.05 Sv whole body dose. Emergency Filtration System operation in maintaining the control room habitability is discussed in DCD Tier 2, Sections 6.4.1 and 9.4.1 (Refs. 1 and 2, respectively).

APPLICABLE SAFETY ANALYSES

The ability of the Emergency Filtration System to maintain the habitability of the control room is an explicit assumption for the safety analyses presented in DCD Tier 2, Chapters 6 and 15 (Refs. 3 and 4, respectively). The filtration mode of the Emergency Filtration System is assumed to operate following a loss of coolant accident, main steam line break, and fuel handling accident. The radiological doses to MCAE personnel as a result of the various DBAs are summarized in Reference 4. No single active or passive failure will cause the loss of outside or recirculated air from the MCAE.

The Emergency Filtration System satisfies Criterion 3 of the NRC Policy Statement.

BASES

LCO

Two redundant divisions of the Emergency Filtration System are required to be OPERABLE to ensure that at least one is available, assuming a single failure disables the other division. Total system failure could result in exceeding a dose of 0.05 Sv to the control room operators in the event of a DBA.

The Emergency Filtration System is considered OPERABLE when the individual components necessary to control operator exposure are OPERABLE in both divisions. A division is considered OPERABLE when its associated:

a. Fan is OPERABLE (one of the two fans);

b. HEPA filter and charcoal adsorber are not excessively restricting flow and are capable of performing their filtration functions; and

c. Heater, ductwork, valves, and dampers are OPERABLE, and air circulation can be maintained.

In addition, the MCAE boundary must be maintained, including the integrity of the walls, floors, ceilings, ductwork, and double entry door with vestibule between at a positive pressure of at least 0.32 mm of water gauge relative to atmosphere.

APPLICABILITY

In MODES 1, 2, and 3, the Emergency Filtration System must be OPERABLE to control operator exposure during and following a DBA, since the DBA could lead to a fission product release.

In MODES 4 and 5, the probability and consequences of a DBA are reduced due to the pressure and temperature limitations in these MODES. Therefore, maintaining the Emergency Filtration System OPERABLE is not required in MODE 4 or 5, except for the following situations under which significant radioactive releases can be postulated:

a. During operations with a potential for draining the reactor vessel (OPDRVs);

b. During CORE ALTERATIONS; and

c. During movement of irradiated fuel assemblies in the secondary containment.

BASES

ACTIONS

A.1

With one Emergency Filtration division inoperable, the inoperable Emergency Filtration division must be restored to OPERABLE status within 7 days. With the unit in this condition, the remaining OPERABLE Emergency Filtration division is adequate to perform MCAE radiation protection. However, the overall reliability is reduced because a single failure in the OPERABLE division could result in loss of Emergency Filtration System function. The 7 day Completion Time is based on the low probability of a DBA occurring during this time period, and that the remaining division can provide the required capabilities.

B.1 and B.2

In MODE 1, 2, or 3, if the inoperable Emergency Filtration division cannot be restored to OPERABLE status within the associated Completion Time, the unit must be placed in a MODE that minimizes risk. To achieve this status, the unit must be placed in at least MODE 3 within 12 hours and in MODE 4 within 36 hours. The allowed Completion Times are reasonable, based on operating experience, to reach the required unit conditions from full power conditions in an orderly manner and without challenging unit systems.

C.1, C.2.1, C.2.2, and C.2.3

The Required Actions of Condition C are modified by a Note indicating that LCO 3.0.3 does not apply. If moving irradiated fuel assemblies while in MODE 1, 2, or 3, the fuel movement is independent of reactor operations. Therefore, inability to suspend movement of irradiated fuel assemblies is not sufficient reason to require a reactor shutdown.

During movement of irradiated fuel assemblies in the secondary containment, during CORE ALTERATIONS, or during OPDRVs, if the inoperable Emergency Filtration division cannot be restored to OPERABLE status within the required Completion Time, the OPERABLE Emergency Filtration division may be placed in the filtration mode. This action ensures that the remaining division is OPERABLE, that no failures that would prevent automatic actuation will occur, and that any active failure will be readily detected.

An alternative to Required Action C.1 is to immediately suspend activities that present a potential for releasing radioactivity that might require initiation of the Emergency Filtration System. This places the unit in a condition that minimizes risk.

BASES

ACTIONS (continued)

C.1, C.2.1, C.2.2, and C.2.3 (continued)

If applicable, CORE ALTERATIONS and movement of irradiated fuel assemblies in the secondary containment must be suspended immediately. Suspension of these activities shall not preclude completion of movement of a component to a safe position. Also, if applicable, actions must be initiated immediately to suspend OPDRVs to minimize the probability of a vessel draindown and subsequent potential for fission product release. Actions must continue until the OPDRVs are suspended.

D.1

If both Emergency Filtration divisions are inoperable in MODE 1, 2, or 3, the Emergency Filtration System may not be capable of performing the intended function and the unit is in a condition outside of the accident analyses. Therefore, LCO 3.0.3 must be entered immediately.

E.1, E.2, and E.3

The Required Actions of Condition E are modified by a Note indicating that LCO 3.0.3 does not apply. If moving irradiated fuel assemblies while in MODE 1, 2, or 3, the fuel movement is independent of reactor operations. Therefore, inability to suspend movement of irradiated fuel assemblies is not sufficient reason to require a reactor shutdown.

During movement of irradiated fuel assemblies in the secondary containment, during CORE ALTERATIONS, or during OPDRVs, with two Emergency Filtration divisions inoperable, action must be taken immediately to suspend activities that present a potential for releasing radioactivity that might require initiation of the Emergency Filtration System. This places the unit in a condition that minimizes risk.

If applicable, CORE ALTERATIONS and movement of irradiated fuel assemblies in the secondary containment must be suspended immediately. Suspension of these activities shall not preclude completion of movement of a component to a safe position. If applicable, actions must be initiated immediately to suspend OPDRVs to minimize the probability of a vessel draindown and subsequent potential for fission product release. Actions must continue until the OPDRVs are suspended.

BASES

SURVEILLANCE REQUIREMENTS

SR 3.7.4.1

This SR verifies that a division in standby mode starts on demand and continues to operate. Standby systems should be checked periodically to ensure that they start and function properly. As the environmental and normal operating conditions of this system are not severe, testing each division once every month provides an adequate check on this system. Monthly heater operation dries out any moisture accumulated in the charcoal from humidity in the ambient air. Systems with heaters must be operated for ≥ 10 continuous hours with the heaters energized. Furthermore, the 31 day Frequency is based on the known reliability of the equipment and the two division redundancy available.

SR 3.7.4.2

This SR verifies that the required Emergency Filtration testing is performed in accordance with the Ventilation Filter Testing Program (VFTP). The Emergency Filtration filter tests are in accordance with Regulatory Guide 1.52 (Ref. 5). The VFTP includes testing HEPA filter performance, charcoal adsorber efficiency, minimum system flow rate, and the physical properties of the activated charcoal (general use and following specific operations). Specific test frequencies and additional information are discussed in detail in the VFTP.

SR 3.7.4.3

This SR verifies that each Emergency Filtration division starts and operates on an actual or simulated initiation signal. The LOGIC SYSTEM FUNCTIONAL TEST in SR 3.3.7.1.4 overlaps this SR to provide complete testing of the safety function. The 18 month Frequency is specified in Reference 5.

SR 3.7.4.4

This SR verifies the integrity of the MCAE and the assumed inleakage rates of potentially contaminated air. The control room positive pressure, with respect to potentially contaminated adjacent spaces, is periodically tested to verify proper function of the Emergency Filtration System. During the emergency mode of operation, the Emergency Filtration System is designed to slightly pressurize the control room to ≥ 3.2 mm

BASES

SURVEILLANCE REQUIREMENTS (continued)

SR 3.7.4.4 (continued)

water gauge positive pressure with respect to the atmosphere to prevent unfiltered inleakage. The Emergency Filtration System is designed to maintain this positive pressure at a flow rate of ≤ 3400 m^3/h @ 0.101 MPa, 0ºC to the MCAE in the emergency filtration mode. The Frequency of 18 months on a STAGGERED TEST BASIS is consistent with industry practice and other filtration system SRs.

REFERENCES

1. DCD Tier 2, Section 6.4.1.
2. DCD Tier 2, Section 9.4.1.
3. DCD Tier 2, Chapter 6.
4. DCD Tier 2, Chapter 15.
5. Regulatory Guide 1.52, Revision 2, March 1978.

B 3.7 PLANT SYSTEMS

B 3.7.5 Control Room Habitability Area (CRHA) – Air Conditioning (AC) System

BASES

BACKGROUND

The CRHA AC System provides temperature control for the main control area envelope (MCAE) at all times the MCAE is occupied.

The CRHA AC System consists of two independent, redundant divisions that provide cooling and heating of recirculated control room air. Each division consists of heating coils, cooling coils, fans, ductwork, dampers, and instrumentation and controls to provide for MCAE temperature control.

The CRHA AC subsystem is designed to provide a controlled environment under both normal and accident conditions. A single division provides the required temperature control to maintain the required MCAE environment for a sustained occupancy of 12 persons. The design conditions for the control room environment are 21°C to 26°C and 10% to 60% relative humidity. The CRHA AC System operation in maintaining the MCAE temperature is discussed in DCD Tier 2, Sections 6.4 and 9.4.1 (Refs. 1 and 2, respectively).

APPLICABLE SAFETY ANALYSES

The design basis of the CRHA AC System is to maintain the MCAE temperature range for a 30 day continuous occupancy.

The CRHA AC System components are arranged in redundant safety related divisions. During emergency operation, the CRHA AC System maintains a habitable environment and ensures the OPERABILITY of components in the MCAE. A single active failure of a component of the CRHA AC System, assuming a loss of offsite power, does not impair the ability of the system to perform its design function. Redundant temperature elements and controls are provided for MCAE temperature control. The CRHA AC System is designed in accordance with Seismic Category I requirements. The CRHA AC System is capable of removing sensible and latent heat loads from the MCAE, including consideration of equipment heat loads and personnel occupancy requirements to ensure equipment OPERABILITY.

The CRHA AC System satisfies Criterion 3 of the NRC Policy Statement.

BASES

LCO

Two independent and redundant divisions of the CRHA AC System are required to be OPERABLE to ensure that at least one is available, assuming a single failure disables the other division. Total system failure could result in the equipment operating temperature exceeding equipment qualification limits.

The CRHA AC System is considered OPERABLE when the individual components necessary to maintain the MCAE temperature are OPERABLE in both divisions. These components include the cooling coils, fans, ductwork, dampers, and associated instrumentation and controls.

APPLICABILITY

In MODE 1, 2, or 3, the CRHA AC System must be OPERABLE to ensure that the MCAE temperature will not exceed equipment OPERABILITY limits following control room isolation.

In MODES 4 and 5, the probability and consequences of a Design Basis Accident are reduced due to the pressure and temperature limitations in these MODES. Therefore, maintaining the CRHA AC System OPERABLE is not required in MODE 4 or 5, except for the following situations under which significant radioactive releases can be postulated:

a. During operations with a potential for draining the reactor vessel (OPDRVs);

b. During CORE ALTERATIONS; and

c. During movement of irradiated fuel assemblies in the secondary containment.

ACTIONS

A.1

With one CRHA AC division inoperable, the inoperable CRHA AC division must be restored to OPERABLE status within 30 days. With the unit in this condition, the remaining OPERABLE CRHA AC division is adequate to perform the MCAE air conditioning function. However, the overall reliability is reduced because a single failure in the OPERABLE division could result in loss of the MCAE air conditioning function. The 30 day Completion Time is based on the low probability of an event occurring requiring MCAE isolation, the consideration that the remaining division can provide the required protection, and the availability of alternate cooling methods.

BASES

ACTIONS (continued)

B.1 and B.2

In MODE 1, 2, or 3, if the inoperable CRHA AC division cannot be restored to OPERABLE status within the associated Completion Time, the unit must be placed in a MODE that minimizes risk. To achieve this status the unit must be placed in at least MODE 3 within 12 hours and in MODE 4 within 36 hours. The allowed Completion Times are reasonable, based on operating experience, to reach the required unit conditions from full power conditions in an orderly manner and without challenging unit systems.

C.1, C.2.1, C.2.2, and C.2.3

The Required Actions of Condition C are modified by a Note indicating that LCO 3.0.3 does not apply.

If moving irradiated fuel assemblies while in MODE 1, 2, or 3, the fuel movement is independent of reactor operations. Therefore, inability to suspend movement of irradiated fuel assemblies is not sufficient reason to require a reactor shutdown.

During movement of irradiated fuel assemblies in the secondary containment, during CORE ALTERATIONS, or during OPDRVs, if Required Action A.1 cannot be completed within the required Completion Time, the OPERABLE CRHA AC division may be placed immediately in operation.

This action ensures that the remaining division is OPERABLE, that no failures that would prevent actuation will occur, and that any active failure will be readily detected.

An alternative to Required Action C.1 is to immediately suspend activities that present a potential for releasing radioactivity that might require isolation of the MCAE. This places the unit in a condition that minimizes risk.

If applicable, CORE ALTERATIONS and movement of irradiated fuel assemblies in the secondary containment must be suspended immediately. Suspension of these activities shall not preclude completion of movement of a component to a safe position. Also, if applicable, actions must be initiated immediately to suspend OPDRVs to minimize the probability of a vessel draindown and subsequent potential for fission product release. Actions must continue until the OPDRVs are suspended.

BASES

ACTIONS (continued)

D.1

If both CRHA AC divisions are inoperable in MODE 1, 2, or 3, the CRHA AC System may not be capable of performing the intended function. Therefore, LCO 3.0.3 must be entered immediately.

E.1, E.2, and E.3

The Required Actions of Condition E.1 are modified by a Note indicating that LCO 3.0.3 does not apply. If moving irradiated fuel assemblies while in MODE 1, 2, or 3, the fuel movement is independent of reactor operations. Therefore, inability to suspend movement of irradiated fuel assemblies is not sufficient reason to require a reactor shutdown.

During movement of irradiated fuel assemblies in the secondary containment, during CORE ALTERATIONS, or during OPDRVs with two CRHA AC divisions inoperable, action must be taken to immediately suspend activities that present a potential for releasing radioactivity that might require isolation of the control room. This places the unit in a condition that minimizes risk.

If applicable, CORE ALTERATIONS and handling of irradiated fuel in the secondary containment must be suspended immediately. Suspension of these activities shall not preclude completion of movement of a component to a safe position. Also, if applicable, actions must be initiated immediately to suspend OPDRVs to minimize the probability of a vessel draindown and subsequent potential for fission product release. Actions must continue until the OPDRVs are suspended.

SURVEILLANCE REQUIREMENTS

SR 3.7.5.1

This SR verifies that the heat removal capability of the system is sufficient to remove the MCAE heat load assumed in the safety analyses. The SR consists of a combination of testing and calculation. The 18 month Frequency is appropriate since significant degradation of the CRHA AC System is not expected over this time period.

BASES

SURVEILLANCE REQUIREMENTS (continued)

SR 3.7.5.2

This SR verifies that each CRHA AC division starts and operates on a low flow signal from the operating Emergency Filtration Unit. The LOGIC SYSTEM FUNCTIONAL TEST in SR 3.3.7.1.4 overlaps this SR to provide complete testing of the safety function. The 18 month Frequency is appropriate since significant degradation of the CRHA AC System is not expected over this time period.

REFERENCES

1. DCD Tier 2, Section 6.4.

2. DCD Tier 2, Section 9.4.1.

B 3.7 PLANT SYSTEMS

B 3.7.6 Main Condenser Offgas

BASES

BACKGROUND	During unit operation, steam from the low pressure turbine is exhausted directly into the condenser. Air and noncondensible gases are collected in the condenser, then exhausted through the steam jet air ejectors (SJAEs) to the Main Condenser Offgas System. The offgas from the main condenser normally includes radioactive gases. The Main Condenser Offgas System has been incorporated into the unit design to reduce the gaseous radwaste emission. This system uses a catalytic recombiner to recombine radiolytically dissociated hydrogen and oxygen. The gaseous mixture is cooled by the offgas condenser; the water and condensibles are stripped out by the offgas condenser and moisture separator. The radioactivity of the remaining gaseous mixture (i.e., the offgas recombiner effluent) is monitored downstream of the moisture separator prior to entering the charcoal adsorber vault.
APPLICABLE SAFETY ANALYSES	The main condenser offgas gross gamma activity rate is an initial condition of the Main Condenser Offgas System failure event as discussed in DCD Tier 2, Section 15.7.1 (Ref. 1). The analysis assumes a partial bypass of the charcoal beds due to operator error. The gross gamma activity rate is controlled to ensure that during the event, the calculated offsite doses will be well within the limits (NUREG-0800, Ref. 2) of 10 CFR 100 (Ref. 3), or the NRC staff approved licensing basis. The main condenser offgas limits satisfy Criterion 2 of the NRC Policy Statement.
LCO	To ensure compliance with the assumptions of the Main Condenser Offgas System failure event (Ref. 1), the fission product release rate should be consistent with a noble gas release to the reactor coolant of 3.7 MBq/MWt second at 30 minutes of decay. The LCO is established consistent with this requirement (4000 MWt x 3.7 MBq/MWt second = 14.8 GBq/second).
APPLICABILITY	The LCO is applicable when steam is being exhausted to the main condenser and the resulting noncondensibles are being processed via the Main Condenser Offgas System. This occurs during MODE 1, and during MODES 2 and 3 with any main steam line not isolated and the SJAE in operation. In MODES 4 and 5, steam is not being exhausted to the main condenser and the requirements are not applicable.

BASES

ACTIONS

A.1

If the offgas radioactivity rate limit is exceeded, 72 hours is allowed to restore the gross gamma activity rate to within the limit. The 72 hour Completion Time is reasonable, based on operating experience to complete the Required Action, considering the large margins associated with permissible dose and exposure limits, and the low probability of an Main Condenser Offgas System rupture occurring.

B.1, B.2, B.3.1, and B.3.2

If the gross gamma activity rate is not restored to within the limits within the associated Completion Time, all main steam lines or the SJAE must be isolated. This isolates the Main Condenser Offgas System from the source of the radioactive steam. The main steam lines are considered isolated if at least one main steam isolation valve in each main steam line is closed, and at least one main steam line drain valve in each drain line is closed. The 12 hour Completion Time is reasonable, based on operating experience, to perform the actions from full power operations in an orderly manner and without challenging unit systems.

An alternative to Required Actions B.1 and B.2 is to place the unit in a MODE in which the LCO does not apply. To achieve this status, the unit must be placed in at least MODE 3 within 12 hours, and in MODE 4 within 36 hours. The allowed Completion Times are reasonable, based on operating experience, to reach the required unit conditions from full power conditions in an orderly manner and without challenging unit systems.

SURVEILLANCE REQUIREMENTS

SR 3.7.6.1

This SR, on a 31 day Frequency, requires an isotopic analysis of an offgas sample to ensure that the required limits are satisfied. The noble gases to be sampled are Xe-133, Xe-135, Xe-138, Kr-85, Kr-87, and Kr-88. If the measured rate of radioactivity increases significantly (by ≥ 50% after correcting for expected increases due to changes in THERMAL POWER), an isotopic analysis is also performed within 4 hours after the increase is noted, to ensure that the increase is not indicative of a sustained increase in the radioactivity rate. The 31 day Frequency is adequate in view of other instrumentation that continuously monitor the offgas, and is acceptable based on operating experience.

This SR is modified by a Note indicating that the SR is not required to be performed until 31 days after any main steam line is not isolated and the SJAE is in operation. Only in this condition can radioactive fission gases be in the Main Condenser Offgas System at significant rates.

BASES

REFERENCES

1. DCD Tier 2, Section 15.7.1.
2. NUREG-0800.
3. 10 CFR 100.

B 3.7 PLANT SYSTEMS

B 3.7.7 Main Turbine Bypass System

BASES

BACKGROUND	The Main Turbine Bypass System is designed to control steam pressure when reactor steam generation exceeds turbine requirements during unit startup, sudden load reduction, and cooldown. It allows excess steam flow from the reactor to the condenser without going through the turbine. The bypass capacity of the system is 33% of the Nuclear Steam Supply System rated steam flow. Sudden load reductions within the capacity of the steam bypass can be accommodated without reactor scram. The Main Turbine Bypass System consists of a three valve chest connected to the main steam lines between the main steam isolation valves and the turbine stop valves. Each of these valves is sequentially operated by hydraulic cylinders. The bypass valves are controlled by the pressure regulation function of the Steam Bypass and Pressure Control System, as discussed in DCD Tier 2, Section 7.7.1.8 (Ref. 1). The bypass valves are normally closed, and the pressure regulator controls the turbine control valves, directing all steam flow to the turbine. If the speed governor or the load limiter restricts steam flow to the turbine, the pressure regulator controls the system pressure by opening the bypass valves. Additionally, for the turbine trip and load rejection events only (Ref. 2) there is a Fast Opening Mode of turbine bypass operation. In the Fast Opening Mode, the turbine bypass will open rapidly in response to a signal generated by the turbine trip or load rejection, independent of steam pressure. When the bypass valves open, the steam flows from the bypass chest, through connecting piping, to the pressure breakdown assemblies, where a series of orifices are used to further reduce the steam pressure before the steam enters the condenser.
APPLICABLE SAFETY ANALYSES	The Main Turbine Bypass System is assumed to function during the design basis feedwater controller failure, maximum demand event, described in DCD Tier 2, Section 15.1.2 (Ref. 2). Opening the bypass valves during the pressurization event mitigates the increase in reactor vessel pressure, which affects the MCPR during the event. An inoperable Main Turbine Bypass System may result in an MCPR penalty. The Main Turbine Bypass System satisfies Criterion 3 of the NRC Policy Statement.
LCO	The Main Turbine Bypass System is required to be OPERABLE to limit peak pressure in the main steam lines and maintain reactor pressure within acceptable limits during events that cause rapid pressurization, such that the Safety Limit MCPR is not exceeded. With the Main Turbine

BASES

LCO (continued)

Bypass System inoperable, modifications to the MCPR limits (LCO 3.2.2, "MINIMUM CRITICAL POWER RATIO (MCPR)") may be applied to allow continued operation.

An OPERABLE Main Turbine Bypass System requires the bypass valves to open in response to increasing main steam line pressure or in the Fast Opening Mode, as applicable. This response is within the assumptions of the applicable analysis (Ref. 2). The MCPR limit for the inoperable Main Turbine Bypass System is specified in the COLR.

APPLICABILITY

The Main Turbine Bypass System is required to be OPERABLE at ≥ 40% RTP to ensure that the fuel cladding integrity Safety Limit and the cladding 1% plastic strain limit are not violated during the feedwater controller failure, maximum demand event. As discussed in the Bases for LCO 3.2.1, "AVERAGE PLANAR LINEAR HEAT GENERATION RATE (APLHGR)," and LCO 3.2.2, sufficient margin to these limits exists at a power level < 40% RTP. Therefore, these requirements are only necessary when operating at or above this power level.

ACTIONS

A.1

If the Main Turbine Bypass System is inoperable (one or more bypass valves inoperable), or the MCPR limits for an inoperable Main Turbine Bypass System, as specified in the COLR, are not applied, the assumptions of the design basis transient analysis may not be met. Under such circumstances, prompt action should be taken to restore the Main Turbine Bypass System to OPERABLE status or adjust the MCPR limits accordingly. The 2 hour Completion Time is reasonable, based on the time to complete the Required Action and the low probability of an event occurring during this period requiring the Main Turbine Bypass System.

B.1

If the Main Turbine Bypass System cannot be restored to OPERABLE status or the MCPR limits for an inoperable Main Turbine Bypass System are not applied, THERMAL POWER must be reduced to < 40% RTP. As discussed in the Applicability section, operation at < 40% RTP results in sufficient margin to the required limits, and the Main Turbine Bypass System is not required to protect fuel integrity during the feedwater controller failure, maximum demand event. The 4 hour Completion Time is reasonable, based on operating experience, to reach the required unit conditions from full power conditions in an orderly manner and without challenging unit systems.

BASES

SURVEILLANCE REQUIREMENTS

SR 3.7.7.1

Opening each main turbine bypass valve to ≥ 10% position demonstrates that the valves are mechanically OPERABLE and will function when required. The 31 day Frequency is based on a reliability analysis (Reference 3).

SR 3.7.7.2

The Main Turbine Bypass System is required to actuate automatically to perform its design function. This SR demonstrates that, with the required system initiation signals, the valves will actuate to their required position. The 18 month Frequency is based on the need to perform this Surveillance under the conditions that apply during a unit outage and because of the potential for an unplanned transient if the Surveillance were performed with the reactor at power. Operating experience has shown the 18 month Frequency, which is based on the refueling cycle, is acceptable from a reliability standpoint.

SR 3.7.7.3

This SR ensures that the TURBINE BYPASS SYSTEM RESPONSE TIME is in compliance with the assumptions of the appropriate safety analysis. The response time limits are specified in the Instrument Setpoint Summary Report. The 18 month Frequency is based on the need to perform this Surveillance under the conditions that apply during a unit outage and because of the potential for an unplanned transient if the Surveillance were performed with the reactor at power. Operating experience has shown the 18 month Frequency, which is based on the refueling cycle, is acceptable from a reliability standpoint and is also based on a reliability analysis in Reference 3.

REFERENCES

1. DCD Tier 2, Section 7.7.1.8.

2. DCD Tier 2, Chapter 15.

3. Letter, Jack Fox to Chet Poslusny, “Submittal Supporting Accelerated ABWR Review Schedule-Revised LCO 3.7.5”, Docket No. STN 52-001, May 19, 1993.

B 3.7 PLANT SYSTEMS

B 3.7.8 Fuel Pool Water Level

BASES

BACKGROUND	The minimum water level in the spent fuel storage pool meets the assumptions of iodine decontamination factors following a fuel handling accident. A general description of the spent fuel storage pool design is found in DCD Tier 2, Section 9.1.2 (Ref. 1). The assumptions of the fuel handling accident are found in DCD Tier 2, Section 15.7.4 (Ref. 2).
APPLICABLE SAFETY ANALYSES	The water level above the irradiated fuel assemblies is an explicit assumption of the fuel handling accident. A fuel handling accident is evaluated to ensure that the radiological consequences (calculated whole body and thyroid doses at the exclusion area and low population zone boundaries) are ≤ 25% (NUREG-0800, Section 15.7.4, Ref. 3) of the 10 CFR 100 (Ref. 4) exposure guidelines. A fuel handling accident could release a fraction of the fission product inventory by breaching the fuel rod cladding as discussed in the Regulatory Guide 1.25 (Ref. 5). The fuel handling accident is evaluated for the dropping of an irradiated fuel assembly onto the reactor core which bounds the consequences of dropping an irradiated fuel assembly onto stored fuel bundles. The consequences of a fuel handling accident inside the reactor building are documented in Reference 2. The water level in the spent fuel storage pool provides for absorption of water soluble fission product gases and transport delays of soluble and insoluble gases that must pass through the water before being released to the reactor building atmosphere. This absorption and transport delay reduces the potential radioactivity of the release during a fuel handling accident. The fuel pool water level satisfies Criterion 2 of the NRC Policy Statement.
LCO	The specified water level preserves the assumption of the fuel handling accident analysis (Ref. 2). As such, it is the minimum required for fuel movement within the spent fuel storage pool.
APPLICABILITY	This LCO applies whenever movement of irradiated fuel assemblies occurs in the associated fuel storage racks since the potential for a release of fission products exists.

BASES

ACTIONS

A.1

Required Action A.1 is modified by a Note indicating that LCO 3.0.3 does not apply. If moving irradiated fuel assemblies while in MODE 1, 2, or 3, the fuel movement is independent of reactor operations. Therefore, inability to suspend movement of irradiated fuel assemblies is not a sufficient reason to require a reactor shutdown.

When the initial conditions for an accident cannot be met, steps should be taken to preclude the accident from occurring. With the fuel pool level less than required, the movement of irradiated fuel assemblies in the associated storage pool is suspended immediately. Suspension of this activity shall not preclude completion of movement of an irradiated fuel assembly to a safe position. This effectively precludes a spent fuel handling accident from occurring.

SURVEILLANCE REQUIREMENTS

SR 3.7.8.1

This SR verifies that sufficient water is available in the event of a fuel handling accident. The water level in the spent fuel storage pool must be checked periodically. The 7 day Frequency is acceptable, based on operating experience, considering that the water volume in the pool is normally stable and water level changes are controlled by unit procedures.

REFERENCES

1. DCD Tier 2, Section 9.1.2.
2. DCD Tier 2, Section 15.7.4.
3. NUREG-0800, Section 15.7.4, Revision 1, July 1981.
4. 10 CFR 100.
5. Regulatory Guide 1.25, March 1972.

B 3.8 ELECTRICAL POWER SYSTEMS

B 3.8.1 AC Sources – Operating

BASES

BACKGROUND

The unit Class 1E AC Electrical Power Distribution System AC sources consist of the offsite power sources (normal preferred and alternate preferred) and the onsite standby power sources (Division I diesel generator (DG), Division II DG, and Division III DG). As required by 10 CFR 50, Appendix A, GDC 17 (Ref. 1), the design of the AC electrical power system provides independence and redundancy to ensure an available source of power to the Engineered Safety Feature (ESF) systems.

The Class 1E AC distribution system supplies electrical power to three divisional load groups, with each division powered by an independent Class 1E 4.16 kV ESF bus (refer to LCO 3.8.9, ”Distribution Systems – Operating”). Each ESF bus has two separate and independent preferred (offsite) sources of power and a dedicated onsite DG. Each ESF bus is also connectable to a combustion turbine generator (CTG). The ESF systems of any two of the three divisions provide for the minimum safety functions necessary to shut down the unit and maintain it in a safe shutdown condition.

Offsite power is supplied to each of the 4.16 kV ESF buses from the transmission network via two electrically and physically separated circuits. In addition, the CTG may be substituted for the second (delay access) offsite source to any one ESF bus (for a limited duration) when the first (immediate access) offsite source to the ESF bus is from a reserve auxiliary transformer while the unit auxiliary transformer associated with the ESF bus is out of service. The CTG may also be substituted for the second (delay access) offsite source for the three ESF buses (for a limited duration) when the first (immediate access) offsite source to each of the ESF buses is from its associated unit auxiliary transformer while the reserve auxiliary transformers (associated with the three ESF buses) are out of service. These offsite AC electrical power circuits are designed and located so as to minimize to the extent practicable the likelihood of their simultaneous failure under operating and postulated accident and environmental conditions. A detailed description of the offsite power system and circuits to the onsite Class 1E ESF buses is found in DCD Tier 2, Chapter 8 (Ref. 2).

An offsite circuit consists of all breakers, transformers, switches, interrupting devices, cabling, controls, and control power supplies required to transmit power from the offsite transmission network to the onsite Class 1E ESF bus(es). Certain required plant loads are returned to service in a predetermined sequence in order to prevent overloading

BASES

BACKGROUND (continued)

the transformer supplying offsite power to the onsite Class 1E Distribution System. Initiating signals (i.e., load shedding and buses-ready-to-load) for returning certain plant loads to service are generated by the control system for the electrical power distribution system. Individual timers for each major load are reset and started by their electrical power distribution system signals and/or LOCA signals. After the initiating signals are received, all automatic and permanently connected loads needed to recover the unit or maintain it in a safe condition are returned to service in a preset sequence via timer delays on each load.

The onsite standby power source for each 4.16 kV ESF bus is a dedicated DG. A DG starts automatically on loss of coolant accident (LOCA) signal (i.e., signal generated from low reactor water level and high drywell pressure that are arranged in two-out-of four logic combinations) or on an ESF bus undervoltage signal (refer to LCO 3.3.1.4, “ESF Actuation Instrumentation”). In addition, power can be supplied to any one ESF from the CTG (for a limited duration) when a DG is inoperable.

In the event of a loss of preferred power, the ESF electrical loads are automatically connected to the DGs in sufficient time to provide for safe reactor shutdown and to mitigate the consequences of a Design Basis Accident (DBA) such as a LOCA.

Ratings for DGs satisfy the requirements of Regulatory Guide 1.9 (Ref. 3). The continuous service rating for each DG is 7200 kW @ 0.8 power factor, with 10% overload permissible for up to 2 hours in any 24 hour period.

APPLICABLE SAFETY ANALYSES

The initial conditions of DBA and transient analyses in DCD Tier, 2 Chapter 6 (Ref. 4) and Chapter 15 (Ref. 5), ssume ESF systems are OPERABLE. The AC electrical power sources are designed to provide sufficient capacity, capability, redundancy, and reliability to ensure the availability of necessary power to ESF systems so that the fuel, Reactor Coolant System (RCS), and containment design limits are not exceeded. These limits are discussed in more detail in the Bases for Section 3.2, Power Distribution Limits; Section 3.4, Reactor Coolant System (RCS); and Section 3.6, Containment Systems.

The OPERABILITY of the AC electrical power sources (not including the CTG) is consistent with the initial assumptions of the accident analyses and is based upon meeting the design basis of the unit. This includes maintaining the onsite or offsite AC sources OPERABLE during accident conditions in the event of:

BASES

APPLICABLE SAFETY ANALYSES (continued)

a. An assumed loss of all offsite power or all onsite AC power; and

b. A worst case single failure.

AC sources satisfy the requirements of Criterion 3 of the NRC Policy Statement. In addition, the CTG may be substituted for the second (delay access) offsite source to any one ESF bus when the first (immediate access) offsite source is from a reserve auxiliary transformer while the unit auxiliary transformer associated with the ESF bus is out of service. The CTG may also be substituted for the second (delay access) offsite source for the three ESF buses (for a limited duration) when the first (immediate access) offsite source to each of the ESF buses is from its associated unit auxiliary transformer while the reserve auxiliary transformers (associated with the three ESF buses) are out of service. The CTG may also be used to substitute (for a limited time) for an inoperable DG. With this substitution, the AC electrical power sources are designed to provide sufficient capacity, capability, redundancy, and reliability to ensure the availability of necessary power to ESF systems so that the fuel, Reactor Coolant System (RCS), and containment design limits are not exceeded.

LCO

Two qualified offsite circuits between the offsite transmission network and the onsite Class 1E Distribution System that consists of three separate and independent divisions (Divisions I, II, and III) each backed by its own dedicated and independent DG, ensure availability of the required power to shut down the reactor and maintain it in a safe shutdown condition after an anticipated operational occurrence (AOO) or a postulated DBA. In addition, the CTG may be utilized as a temporary substitution for the second (delayed access) qualified offsite circuit when the first (immediate access) qualified offsite circuit to any one ESF bus (immediate access) offsite source is from a reserve auxiliary transformer while the unit auxiliary transformer associated with the ESF bus is out of service. With this temporary substitution, the two qualified offsite circuits between the offsite transmission network and the onsite Class 1E Distribution System that consists of three separate and independent divisions (Divisions I, II, and III) each backed by its own dedicated and independent DG, also ensure availability of the required power to shutdown the reactor and maintain it in a safe condition after an anticipated operational occurrence (AOO) or a postulated DBA.

Qualified offsite circuits are the normal and alternate preferred power circuits that are described in DCD Tier 2, Chapter 8 and are part of the licensing basis for the unit. In addition, the temporary substitution of the CTG is described in DCD Tier 2, Chapter 8 and is part of the licensing basis for the unit.

BASES

LCO (continued)

Each offsite circuit must be capable of maintaining rated frequency and voltage, and accepting required loads within the assumed load sequence intervals during an accident, while connected to the ESF buses. The normal preferred circuit consists of the switching station breaker to the main transformer, the generator breaker, the disconnect links to the unit auxiliary transformers, and the circuit path from the offsite transmission network to all of the 4.16 kV ESF buses including feeder breakers at the 4.16 kV ESF buses. The alternate preferred circuit consists of the switching station breakers to the reserve auxiliary transformers and the circuit path from the offsite transmission network to all of the 4.16 kV ESF buses including feeder breakers at the 4.16 kV ESF buses.

Each DG must be capable of starting, accelerating to required speed and voltage, and connecting to its respective ESF bus on detection of bus undervoltage. This sequence must be accomplished within 20 seconds. Each DG must also be capable of accepting required loads within the assumed loading sequence intervals, and must continue to operate until offsite power can be restored to the ESF buses. These capabilities are required to be met from a variety of initial conditions such as DG in standby with engine hot, DG in standby with engine at ambient conditions, and DG operating in parallel test mode.

The CTG, when used as a temporary substitute for the second offsite source or for an inoperable DG to any one ESF bus, must be capable of starting, accelerating to required speed and voltage, and of being manually configured to provide power to the ESF bus. This sequence must be accomplished in less than 10 minutes. The CTG must also be capable of accepting required loads, must be capable of maintaining rated frequency and voltage, and accepting required loads when connected to the ESF bus.

Proper sequencing of loads is a required function for both DG and offsite circuit OPERABILITY.

The AC sources are separate and independent. For the DG AC sources, the separation and independence are complete. For the offsite AC sources (including the CTG as an offsite source), the separation and independence are to the extent practicable. For the offsite (including the CTG) to DG AC sources, the separation and independence are to the extent practicable.

Offsite circuit OPERABILITY includes the normal offsite source supplying two of three AC divisions and the alternate offsite source supplying the third AC division. Other configurations make an offsite circuit inoperable.

BASES

LCO (continued)

The AC sources are required to be OPERABLE in MODES 1, 2, and 3 to ensure that:

a. Acceptable fuel design limits and reactor coolant pressure boundary limits are not exceeded as a result of AOOs or abnormal transients; and

b. Adequate core cooling is provided and containment OPERABILITY and other vital functions are maintained in the event of a postulated DBA.

AC power requirements for MODES 4 and 5 are covered in LCO 3.8.2, “AC Sources – Refueling”, and LCO 3.8.11, “AC Sources – Shutdown (Low Water Level).”

ACTIONS

A.1, A.2, A.3, and A.4

If Condition A is entered, Required Action A.4 allows 30 days to restore the inoperable offsite power source to one ESF bus to OPERABLE status provided:

a. The ESF bus with its associated unit auxiliary transformer inoperable is verified to be energized from the offsite transmission network through the reserve auxiliary transformer initially within 72 hours, and once per 8 hours thereafter,

b. The CTG is verified functional through testing within 72 hours and once per 7 days thereafter,

c. The CTG is verified to be aligned with the ESF bus that has its associated unit auxiliary transformer inoperable within 72 hours, and once per 8 hours thereafter.

The 30 day Completion Time is reasonable because it accounts for the reliability and convenience of the CTG. Since the CTG can be aligned as a temporary backup offsite source, there are sufficient offsite sources available if Required Actions A.2 and A.3 are completed. The LCO is satisfied at this point. However, given the primary function of the CTG as the alternate AC power source during the station blackout event and a standby non-safety related power source located onsite to energize non-safety related plant investment protection loads, the Completion Time has been limited to 30 days.

BASES

ACTIONS (continued)

A.1, A.2, A.3, and A.4 (continued)

If the CTG cannot be made available to function as a temporary backup offsite circuit within 72 hours, the configuration of the AC sources is described in Regulatory Guide 1.93 (Ref. 6), which states that operation in the applicable modes may continue as described by Condition A for a period that should not exceed 72 hours. Therefore, if Required Actions A.2 and A.3 cannot be completed within 72 hours of entering Condition A, then Required Actions G.1 and G.2 must be followed. Upon restoring the offsite circuit to OPERABLE status, the LCO is met, Conditions A and G are exited, and operation may continue.

Should the CTG no longer be functional or capable of being aligned to the ESF bus subsequent to the 72-hour period following initial entry into Condition A, Condition G again applies and Required Actions G.1 and G.2 must be followed. Anytime the 8-hours Completion Time of Required Action A.3 is not met during this extension period, Condition G must be entered. Condition G can then only be exited by restoring the offsite circuit to OPERABLE status.

B.1

To ensure a highly reliable power source remains, it is necessary to verify the availability of the remaining required offsite circuits on a more frequent basis. Since the Required Action only specifies “perform,” a failure of SR 3.8.1.1 acceptance criteria does not result in the Required Action not met. However, if a second required circuit fails SR 3.8.1.1, the second offsite circuit is inoperable, and Condition D, for two offsite circuits inoperable, is entered.

B.2

Required Action B.2, which only applies if the division cannot be powered from an offsite source, is intended to provide assurance that an event with a coincident single failure of the associated DG does not result in a complete loss of safety function of critical systems. These features are designed with redundant safety related divisions. Redundant required features failures consist of inoperable features associated with a division redundant to the division that has no offsite power.

The Completion Time for Required Action B.2 is intended to allow time for the operator to evaluate and repair any discovered inoperabilities. This Completion Time also allows for an exception to the normal “time zero” for beginning the allowed outage time “clock.” In this Required Action, the Completion Time only begins on discovery that both:

BASES

ACTIONS (continued)

B.2 (continued)

a. The division has no offsite power supplying its loads; and

b. A required feature on the other division is inoperable.

If, at any time during the existence of this Condition (one offsite circuit inoperable), a required feature subsequently becomes inoperable, this Completion Time begins to be tracked.

Discovering no offsite power to one division of the onsite Class 1E Power Distribution System coincident with one or more inoperable required support or supported features, or both, that are associated with the other division that has offsite power, results in starting the Completion Times for the Required Action. Twenty-four hours is acceptable because it minimizes risk while allowing time for restoration before the unit is subjected to transients associated with shutdown.

The remaining OPERABLE offsite circuit and DGs are adequate to supply electrical power to the onsite Class 1E Distribution System. Thus, on a component basis, single failure protection may have been lost for the required feature's function; however, function is not lost. The 24 hour Completion Time takes into account the component OPERABILITY of the redundant counterpart to the inoperable required feature. Additionally, the 24 hour Completion Time takes into account the capacity and capability of the remaining AC sources, a reasonable time for repairs, and the low probability of a DBA occurring during this period.

B.3, B.4, and B.5

If Condition B is entered, Required Action B.5 allows 14 days to restore the inoperable offsite circuit to OPERABLE status, provided the combustion turbine generator (CTG) is verified functional through testing within 72 hours and its capability of being aligned to any of the three ESF buses is verified, initially within 72 hours, and once per 8 hours thereafter. This 14-day Completion Time is reasonable because it accounts for the reliability and convenience of the CTG. Since the CTG can be aligned as a temporary backup offsite source, there are sufficient offsite sources available if Required Actions B.3 and B.4 are completed. The LCO is not completely satisfied at this point, but the AC electrical power system is verified to be sufficiently reliable to allow for the 14-day Completion Time of Required Action A.5. The 14-day Completion Time is also reasonable because the capabilities of the remaining AC sources are adequate for

BASES

ACTIONS (continued)

B.3, B.4, and B.5 (continued)

this time period, and because of the low probability of a DBA occurring during this time period. See the discussion for Required Action C.6 for additional justification of this Completion Time.

If the CTG cannot be made available to function as a temporary backup offsite circuit within 72 hours, the configuration of the AC sources is as described in Regulatory Guide 1.93 (Ref. 6), which states that operation in the applicable modes may continue as described by Condition B for a period that should not exceed 72 hours. Therefore, if Required Actions B.3 and B.4 cannot be completed within 72 hours of entering Condition B, then Required Actions G.1 and G.2 must be followed. Upon restoring the offsite circuit to OPERABLE status, the LCO is met, Conditions B and G are exited, and operation may continue.

Should the CTG no longer be functional or capable of being aligned to a 4.16 kV AC ESF bus subsequent to the 72-hour period following initial entry into Condition B, Condition G again applies and Required Actions G.1 and G.2 must be followed. Anytime the 8-hour Completion Time of Required Action B.4 is not met during this extension period, Condition G must be entered. Condition G can then only be exited by restoring the offsite circuit to OPERABLE status.

The CTG is considered functional when the requirements of DCD Tier 2, Section 9.5.13.19 are satisfied and the CTG is verified to start and achieves steady state voltage $\geq$ 12.42 kV and $\leq$ 15.18 kV, and frequency $\geq$ 58.8 Hz and $\leq$ 61.2 Hz in less than 10 minutes.

The 14-day Completion Time of Required Action B.5 assumes sufficient offsite power remains to power the minimum loads needed to respond to analyzed events. It also assumes that the CTG may be utilized if needed. Should two divisions be affected, the 1-day Completion Time of Required Action B.5 is conservative with respect to the Regulatory Guide assumptions supporting a 1 day Completion Time for both offsite circuits inoperable (addressed by Condition D). With only one offsite circuit, the reliability of the offsite system is degraded, and the potential for a loss of offsite power is increased, with attendant potential for a challenge to the plant safety systems. In Condition B, however, the remaining OPERABLE offsite circuit, DGs, and the CTG are adequate to supply electrical power to the onsite Class 1E distribution system.

The 14-day Completion Time takes into account the capacity and capability of the remaining AC sources, reasonable time for repairs, and the low probability of a DBA occurring during this period.

BASES

ACTIONS (continued)

B.3, B.4, and B.5 (continued)

The third Completion Time for Required Action B.5 establishes a limit on the maximum time allowed for any combination of required AC power sources to be inoperable during any single contiguous occurrence of failing to meet the LCO. If Condition B is entered while, for instance, a DG is inoperable and that DG is subsequently returned to OPERABLE status, the LCO may already have been not met for up to 14 days. This situation could lead to a total of 28 days, since initial failure to meet the LCO, to restore the offsite circuit. At this time, a DG could again become inoperable, the circuit restored to OPERABLE status, and an additional 14 days (for a total of 42 days) allowed prior to complete restoration of the LCO. The 15-day Completion Time provides a limit on the time allowed in a specified Condition after discovery of failure to meet the LCO.

This limit is considered reasonable for situations in which Conditions B and C are entered concurrently. The "AND" connector between the 14-day and 15-day Completion Times means that both Completion Times apply simultaneously, and the more restrictive must be met.

As in Required Action B.2, the Completion Time allows for an exception to the normal "time zero" for beginning the allowed outage time "clock." This exception results in establishing the "time zero" at the time the LCO was initially not met, instead of at the time that Condition B was entered.

C.1

To ensure a highly reliable power source remains, it is necessary to verify the availability of the remaining required offsite circuit on a more frequent basis. Since the Required Action only specifies "perform," a failure of SR 3.8.1.1 acceptance criteria does not result in a Required Action being not met. However, if a circuit fails to pass SR 3.8.1.1, it is inoperable. Upon offsite circuit inoperability, additional Conditions must then be entered.

C.2

Required Action C.2 is intended to provide assurance that a loss of offsite power, during the period that a DG is inoperable, does not result in a complete loss of safety function of critical systems. These features are designed with redundant safety related divisions (i.e., single division systems are not included). Redundant required features failures consist of inoperable features associated with a division redundant to the division that has an inoperable DG.

BASES

ACTIONS (continued)

C.2 (continued)

The Completion Time is intended to allow the operator time to evaluate and repair any discovered inoperabilities. This Completion Time also allows for an exception to the normal "time zero" for beginning the allowed outage time "clock."

In this Required Action, the Completion Time only begins on discovery that both:

a. An inoperable DG exists; and

b. A required feature on the other division is inoperable.

If, at any time during the existence of this Condition (one DG inoperable), a required feature subsequently becomes inoperable, this Completion Time begins to be tracked.

Discovering one required DG inoperable coincident with one or more required support or supported features, or both, that are associated with the OPERABLE DGs, results in starting the Completion Time for the Required Action. Four hours from the discovery of these events existing concurrently is acceptable because it minimizes risk while allowing time for restoration before subjecting the unit to transients associated with shutdown.

The remaining OPERABLE DGs and offsite circuits are adequate to supply electrical power to the onsite Class 1E Distribution System. Thus, on a component basis, single failure protection for the required feature's function may have been lost; however, function has not been lost. The 4 hour Completion Time takes into account the component OPERABILITY of the redundant counterpart to the inoperable required feature. Additionally, the 4 hour Completion Time takes into account the capacity and capability of the remaining AC sources, reasonable time for repairs, and low probability of a DBA occurring during this period.

C.3.1 and C.3.2

The Note in Condition C requires that Required Action C.3.1 or C.3.2 must be completed if Condition C is entered. The intent is that all DG inoperabilities must be investigated for common cause failures regardless of how long the DG inoperability persists.

BASES

ACTIONS (continued)

C.3.1 and C.3.2 (continued)

Required Action C.3.1 provides an allowance to avoid unnecessary testing of OPERABLE DGs. If it can be determined that the cause of the inoperable DG does not exist on the OPERABLE DG, SR 3.8.1.2 does not have to be performed. If the cause of inoperability exists on other DGs, the other DGs are declared inoperable upon discovery, and Condition F of LCO 3.8.1 is entered. Once the failure is repaired, and the common cause failure no longer exists, Required Action C.3.1 is satisfied. If the cause of the initial inoperable DG cannot be confirmed not to exist on the remaining DG(s), performance of SR 3.8.1.2 suffices to provide assurance of continued OPERABILITY of those DGs.

According to Generic Letter 84-15 (Ref. 7), 24 hours is reasonable time to confirm that the OPERABLE DGs are not affected by the same problem as the inoperable DG.

C.4, C.5, and C.6

If Condition C is entered, Required Action C.6 allows 14 days to restore the inoperable DG to OPERABLE status provided the CTG is verified functional through testing within 72 hours, and its circuit breakers are verified to be aligned to the affected ESF bus initially within 72 hours and once per 8 hours thereafter. This 14-day Completion Time is reasonable because of the reliability and convenience of the CTG, the low probability of a DBA occurring during this time period.

The CTG is considered functional when the requirements of DCD Tier 2, Section 9.5.13.19 are satisfied and the CTG is verified to start from standby conditions and achieves steady state voltage $\geq$ 12.42 kV and $\leq$ 15.18 kV, and frequency $\geq$ 58.8 Hz and $\leq$ 61.2 Hz in less than 10 minutes.

If the CTG can not be made available to function as a temporary onsite divisional backup to preferred offsite power, the configuration of the AC sources is as described in Regulatory Guide 1.93 (Ref. 6), which states that operation may continue as described in Condition C for a period that should not exceed 72 hours. Therefore, if Required Actions C.4 and C.5 cannot be completed within 72 hours of entering Condition B, then Required Actions G.1 and G.2 must be followed. Upon restoring the inoperable DG to OPERABLE status, the LCO is met, Conditions C and G are exited, and operation may continue.

In Condition C, if the CTG is not functional, the remaining OPERABLE DGs and offsite circuits are adequate to supply electrical power to the onsite Class 1E distribution system for 72 hours. The 72 hour Completion

BASES

ACTIONS (continued)

C.4, C.5, and C.6 (continued)

Time takes into account the capacity and capability of the remaining AC sources, reasonable time for repairs, and low probability of a DBA occurring during this period.

Should the CTG no longer be functional or capable of being aligned to an ESF bus subsequent to the 72-hour period following initial entry into Condition C, Condition G again applies and Required Actions G.1 and G.2 must be followed. Anytime the 8-hour Completion Time of Required Action C.5 is not met during this extension period, Condition G must be entered. Condition G can then only be exited by restoring the DG to OPERABLE status.

The once-per-8-hour Completion Time of Required Action C.5 is necessary to keep a check on the proper alignment of the CTG's circuit breakers and thus the capability of supplying power from the CTG to the ESF bus associated with the inoperable DG.

The second Completion Time for Required Action C.6 establishes a 15-day limit on the maximum time allowed for any combination of required AC power sources to be inoperable during any single contiguous occurrence of failing to meet the LCO. If Condition C is entered while, for instance, an offsite circuit is inoperable and that circuit is subsequently restored OPERABLE, the LCO may already have been not met for up to 7 days. This situation could lead to a total of 14 days, since initial failure to meet the LCO, to restore the DG. At this time, an offsite circuit could again become inoperable, the DG restored OPERABLE, and an additional 7 days (for a total of 21 days) would be allowed prior to complete restoration of the LCO.

The 15-day Completion Time provides a limit on the time allowed in a specified condition after discovery of failure to meet the LCO. This limit is considered reasonable for situations in which Conditions B and C are entered concurrently. The "AND" connector between the 14-day and 15-day Completion Times means that both Completion Times apply simultaneously, and the more restrictive must be met.

As in Required Action C.2, the 15-day Completion Time of Required Action C.5 allows for an exception to the normal "time zero" for beginning the allowed outage time "clock." This exception results in establishing the "time zero" at the time the LCO was initially not met, instead of the time Condition C was entered.

BASES

ACTIONS (continued)

D.1 and D.2

Required Action D.1 addresses actions to be taken in the event of concurrent failure of redundant required features. Required Action D.1 reduces the vulnerability to a loss of function. The Completion Time for taking these actions is reduced to 12 hours from that allowed with only one division without offsite power (Required Action B.2). The rationale for the reduction to 12 hours is that Regulatory Guide 1.93 (Ref. 6) allows a Completion Time of 24 hours for two required offsite circuits inoperable, based upon the assumption that all three safety divisions are OPERABLE. When a concurrent redundant required feature failure exists, this assumption is not the case, and a shorter Completion Time of 12 hours is appropriate. These features are designed with redundant safety related divisions (i.e., single division systems are not included in the list). Redundant required features failures consist of any of these features that are inoperable, because any inoperability is on a division redundant to a division with inoperable offsite circuits.

The Completion Time for Required Action D.1 is intended to allow the operator time to evaluate and repair any discovered inoperabilities. This Completion Time also allows for an exception to the normal “time zero” for beginning the allowed outage time “clock.” In this Required Action, the Completion Time only begins on discovery that both:

a. All required offsite circuits are inoperable; and

b. A required feature is inoperable.

If, at any time during the existence of this Condition (two offsite circuits inoperable), a required feature subsequently becomes inoperable, this Completion Time begins to be tracked.

According to Regulatory Guide 1.93 (Ref. 6), operation may continue in Condition D for a period that should not exceed 24 hours. This level of degradation means that the offsite electrical power system does not have the capability to effect a safe shutdown and to mitigate the effects of an accident; however, the onsite AC sources have not been degraded. This level of degradation generally corresponds to a total loss of the immediately accessible offsite power sources.

Because of the normally high availability of the offsite sources, this level of degradation may appear to be more severe than other combinations of two AC sources inoperable that involve one or more DGs inoperable. However, two factors tend to decrease the severity of this degradation level:

BASES

ACTIONS (continued)

D.1 and D.2 (continued)

a. The configuration of the redundant AC electrical power system that remains available is not susceptible to a single bus or switching failure; and

b. The time required to detect and restore an unavailable offsite power source is generally much less than that required to detect and restore an unavailable onsite AC source.

With both of the required offsite circuits inoperable, sufficient onsite AC sources are available to maintain the unit in a safe shutdown condition in the event of a DBA or transient. In fact, a simultaneous loss of offsite AC sources, a LOCA, and a worst case single failure were postulated as a part of the design basis in the safety analysis. Thus, the 24 hour Completion Time provides a period of time to effect restoration of one of the offsite circuits commensurate with the importance of maintaining an AC electrical power system capable of meeting its design criteria.

According to Regulatory Guide 1.93 (Ref. 6), with the available offsite AC sources two less than required by the LCO, operation may continue for 24 hours. If two offsite sources are restored within 24 hours, unrestricted operation may continue. If only one offsite source is restored within 24 hours, power operation continues in accordance with Condition B.

The status of the CTG was not a consideration in establishing the appropriate Completion Times for Required Actions D.1 AND D.2.

E.1 and E.2

Pursuant to LCO 3.0.6, the Distribution System ACTIONS would not be entered even if all AC sources to it were inoperable, resulting in de-energization. Therefore, the Required Actions of Condition E are modified by a Note to indicate that when Condition E is entered with no required AC source to one division, Actions for LCO 3.8.9, “Distribution Systems – Operating,” must be immediately entered. This allows Condition E to provide requirements for the loss of the offsite circuit and one DG without regard to whether a division is de-energized. LCO 3.8.9 provides the appropriate restrictions for a de-energized division.

In Condition E, individual redundancy is lost in both the offsite electrical power system and the onsite AC electrical power system. Since power system redundancy is provided by two diverse sources of power, however, the reliability of the power systems in this Condition may appear

BASES

ACTIONS (continued)

E.1 and E.2 (continued)

higher than that in Condition D (loss of both required offsite circuits). This difference in reliability is offset by the susceptibility of this power system configuration to a single bus or switching failure.

If Condition E is entered, Required Action E.3.1 or E.3.2 allows 72 hours to restore either the inoperable offsite circuit or the DG to OPERABLE status provided the CTG is verified functional through testing within 72 hours, and its circuit breakers are aligned to the affected ESF bus associated with an inoperable DG initially within 12 hours and once per 8 hours thereafter. This 72 hour Completion Time is reasonable because of the reliability and convenience of the CTG, the capability of the remaining AC sources, reasonable time for repairs, and the low probability of a DBA occurring during this time period.

The CTG is considered functional when the requirements of DCD Tier 2, Section 9.5.13.19 are satisfied and the CTG is verified to start from standby conditions and achieves steady state voltage ≥ 12.42 kV and ≤ 15.18 kV, and frequency ≥ 58.8 Hz and ≤ 61.2 Hz in less than 10 minutes.

If the CTG can not be made available to function as a temporary onsite divisional backup power source, the configuration of the AC sources is as described in Regulatory Guide 1.93 (Ref. 6), which states that operation may continue as described in Condition E for a period that should not exceed 12 hours. Therefore, if Required Actions E.1 and E.2 cannot be completed within 12 hours of entering Condition E, then Required Actions G.1 and G.2 must be followed. Upon restoring the inoperable offsite circuit or DG to OPERABLE status, the LCO is met, Conditions E and G are exited, and operation may continue.

Should the CTG no longer be functional or not aligned to an ESF bus subsequent to the 12-hour period following initial entry into Condition C, Condition G again applies and Required Actions G.1 and G.2 must be followed. Anytime the 8-hour Completion Time of Required Action E.2 is not met during this extension period, Condition G must be entered. Condition G can then only be exited by restoring the offsite circuit or the DG to OPERABLE status.

The once-per-8-hour Completion Time of Required Action E.2 is necessary to keep a check on the proper alignment of the CTG's circuit breakers and thus the capability of supplying power from the CTG to the 4.16 kV ESF bus associated with the inoperable DG.

BASES

ACTIONS (continued)

F.1

If Condition F is entered, Required Action F.3 allows 72 hours to restore one DG to OPERABLE status provided the CTG is verified functional through testing within 2 hours, and its circuit breakers are aligned to one affected 4.16 kV ESF bus associated with an inoperable DG and capable of being aligned to the other 4.16 kV ESF bus associated with an inoperable DG, initially within 2 hours and verified once per 8 hours thereafter. This 2 hour Completion Time is reasonable because of the reliability and convenience of the CTG, the capability of the remaining AC sources, reasonable time for repairs, and the low probability of a DBA occurring during this time period.

The CTG is considered functional when the requirements of DCD Tier 2, Section 9.5.13.19 are satisfied and the CTG is verified to start from standby conditions and achieves steady state voltage ≥ 12.42 kV and ≤ 15.18 kV, and frequency ≥ 58.8 Hz and ≤ 61.2 Hz in less than 10 minutes.

If the CTG can not be made available to function as a temporary onsite divisional backup power source, the configuration of the AC sources is as described in Regulatory Guide 1.93 (Ref. 6), which states that operation may continue as described in Condition F for a period that should not exceed 2 hours. Therefore, if Required Actions F.1 and F.2 cannot be completed within 2 hours of entering Condition F, then Required Actions G.1 and G.2 must be followed. Upon restoring the inoperable one DG to OPERABLE status, the LCO is met, Conditions F and G are exited, and operation may continue.

Should the CTG no longer be functional or not aligned to one ESF bus or not capable of being aligned to the other ESF bus subsequent to the 2-hour period following initial entry into Condition F, Condition G again applies and Required Actions G.1 and G.2 must be followed. Anytime the 8-hour Completion Time of Required Action F.2 is not met during this extension period, Condition G must be entered. Condition G can then only be exited by restoring the DG to OPERABLE status.

The once-per-8-hour Completion Time of Required Action F.2 is necessary to keep a check on the proper alignment of the CTG's circuit breakers and thus the capability of supplying power from the CTG to the ESF buses associated with the inoperable DGs.

BASES

ACTIONS (continued)

G.1 and G.2

If the inoperable AC electrical power sources cannot be restored to OPERABLE status within the associated Completion Time, the unit must be brought to a MODE in which the LCO does not apply. To achieve this status, the unit must be brought to MODE 3 within 12 hours and to MODE 4 within 36 hours. The allowed Completion Times are reasonable, based on operating experience, to reach the required plant conditions from full power conditions in an orderly manner and without challenging plant systems.

H.1

Condition H corresponds to a level of degradation in which all redundancy in the AC electrical power supplies has been lost. At this severely degraded level, any further losses in the AC electrical power system will cause a loss of function. Therefore, no additional time is justified for continued operation. The unit is required by LCO 3.0.3 to commence a controlled shutdown.

SURVEILLANCE REQUIREMENTS

The AC sources are designed to permit inspection and testing of all important areas and features, especially those that have a standby function, in accordance with 10 CFR 50, GDC 18 (Ref. 8). Periodic component tests are supplemented by extensive functional tests during refueling outages under simulated accident conditions. The SRs for demonstrating the OPERABILITY of the DGs are in accordance with the recommendations of Regulatory Guide 1.9 (Ref. 3), and Regulatory Guide 1.137 (Ref. 9).

Where the SRs discussed herein specify voltage and frequency tolerances, the following summary is applicable. The minimum steady state output voltage of 3744 V is 90% of the nominal 4.16 kV output voltage. This value, which is specified in ANSI C84.1 (Ref. 10), allows for voltage drop to the terminals of 4000 V motors whose minimum operating voltage is specified as 90%, or 3600 V. It also allows for voltage drops to motors and other equipment down through the 120 V level where minimum operating voltage is also usually specified as 90% of name plate rating. The specified maximum steady state output voltage of 4576 V is equal to the maximum operating voltage specified for 4000 V motors plus voltage drop from the source to the loads. It ensures that for a lightly loaded distribution system, the voltage at the terminals of 4000 V motors is no more than the maximum rated operating voltages. The specified

BASES

SURVEILLANCE REQUIREMENTS (continued)

minimum and maximum frequencies of the DG are 58.8 Hz and 61.2 Hz, respectively. These values are equal to ± 2% of the 60 Hz nominal frequency and are derived from the recommendations given in Regulatory Guide 1.9 (Ref. 3).

SR 3.8.1.1

This SR ensures proper circuit continuity for the offsite AC electrical power supply to the onsite distribution network and availability of offsite AC electrical power. The breaker alignment verifies that each breaker is in its correct position to ensure that distribution buses and loads are connected to their preferred power source and that appropriate independence of offsite circuits is maintained. The 7 day Frequency is adequate since breaker position is not likely to change without the operator being aware of it and because its status is displayed in the control room.

SR 3.8.1.2 and SR 3.8.1.7

These SRs help to ensure the availability of the standby electrical power supply to mitigate DBAs and transients and maintain the unit in a safe shutdown condition.

To minimize the wear on moving parts that do not get lubricated when the engine is not running, these SRs have been modified by Notes (Note 1 for SR 3.8.1.7 and Note 2 for SR 3.8.1.2) to indicate that all DG starts for these Surveillances may be preceded by an engine prelube period and followed by a warmup period prior to loading.

For the purposes of this testing, the DGs are started from standby conditions. Standby conditions for a DG mean that the diesel engine coolant and oil are being continuously circulated and temperature is being maintained consistent with manufacturer recommendations.

In order to reduce stress and wear on diesel engines, some manufacturers recommend that the starting speed of DGs be limited, that warmup be limited to this lower speed, and that DGs be gradually accelerated to synchronous speed prior to loading. These start procedures are the intent of Note 3, which is only applicable when such procedures are recommended by the manufacturer.

BASES

SURVEILLANCE REQUIREMENTS (continued)

SR 3.8.1.2 and SR 3.8.1.7 (continued)

SR 3.8.1.7 requires that, at a 184 day Frequency, the DG starts from standby conditions and achieves required voltage and frequency within 20 seconds. The 20 second start requirement supports the requirements set forth in DCD Tier 2, Chapter 8 (Ref. 2). The 20 second start requirement may not be applicable to SR 3.8.1.2 (see Note 3 of SR 3.8.1.2), when a modified start procedure as described above is used. If a modified start is not used, the 20 second start requirement of SR 3.8.1.7 applies. Since SR 3.8.1.7 does require a 20 second start, it is more restrictive than SR 3.8.1.2, and it may be performed in lieu of SR 3.8.1.2. This procedure is the intent of Note 1 of SR 3.8.1.2.

The normal 31 day Frequency for SR 3.8.1.2 (see Table 3.8.1-1, "Diesel Generator Test Schedule") is consistent with Regulatory Guide 1.9 (Ref. 9). The 184 day Frequency for SR 3.8.1.7 is a reduction in cold testing consistent with Generic Letter 84-15 (Ref. 7). These Frequencies provide adequate assurance of DG OPERABILITY, while minimizing degradation resulting from testing.

SR 3.8.1.3

This Surveillance demonstrates that the DGs are capable of synchronizing and accepting greater than or equal to the equivalent of the maximum expected accident loads. A minimum run time of 60 minutes is required to stabilize engine temperatures, while minimizing the time that the DG is connected to the offsite source.

In order to ensure that the DG is tested under load conditions that are as close to design basis conditions as possible, testing shall be performed using a power factor less than or equal to 0.9. This power factor is chosen to be representative of the actual design basis inductive loading that the DG would experience. The load band is provided to avoid routine overloading of the DG. Routine overloading may result in more frequent tear down inspections in accordance with vendor recommendations in order to maintain DG OPERABILITY.

The normal 31 day Frequency for this Surveillance (see Table 3.8.1-1) is consistent with Regulatory Guide 1.9 (Ref. 9).

Note 1 modifies this Surveillance to indicate that diesel engine runs for this Surveillance may include gradual loading, as recommended by the manufacturer, so that mechanical stress and wear on the diesel engine are minimized.

BASES

SURVEILLANCE REQUIREMENTS (continued)

SR 3.8.1.3 (continued)

Note 2 modifies this Surveillance by stating that momentary transients because of changing bus loads do not invalidate this test.

Note 3 indicates that this Surveillance should be conducted on only one DG at a time in order to avoid common cause failures that might result from offsite circuit or grid perturbations. Similarly, momentary power factor transients above the limit do not invalidate the test.

Note 4 stipulates a prerequisite requirement for performance of this SR. A successful DG start must precede this test to credit satisfactory performance.

SR 3.8.1.4

This SR provides verification that the level of fuel oil in the day tank is at or above the level at which fuel oil is automatically added. The level is expressed as an equivalent volume in liters, and is selected to ensure adequate fuel oil for a minimum of 4 hours of DG operation at maximum LOCA load demand.

The 31 day Frequency is adequate to assure that a sufficient supply of fuel oil is available, since low level alarms are provided and facility operators would be aware of any large uses of fuel oil during this period.

SR 3.8.1.5

Microbiological fouling is a major cause of fuel oil degradation. There are numerous bacteria that can grow in fuel oil and cause fouling, but all must have a water environment in order to survive. Removal of water from the fuel oil day tanks once every 31 days eliminates the necessary environment for bacterial survival. This is most effective means of controlling microbiological fouling. In addition, it eliminates the potential for water entrainment in the fuel oil during DG operation. Water may come from any of several sources, including condensation, ground water, rain water, contaminated fuel oil, and breakdown of the fuel oil by bacteria. Frequent checking for and removal of accumulated water minimizes fouling and provides data regarding the watertight integrity of the fuel oil system. The Surveillance Frequencies are established by Regulatory Guide 1.137 (Ref. 9). This SR is for preventive maintenance. The presence of water does not necessarily represent a failure of this SR provided that accumulated water is removed during performance of this Surveillance.

BASES

SURVEILLANCE REQUIREMENTS (continued)

SR 3.8.1.6

This Surveillance demonstrates that each required fuel oil transfer pump operates and transfers fuel oil from its associated storage tank to its associated day tank. It is required to support continuous operation of standby power sources. This Surveillance provides assurance that the fuel oil transfer pump is OPERABLE, the fuel oil piping system is intact, the fuel delivery piping is not obstructed, and the controls and control systems for automatic fuel transfer systems are OPERABLE. This test may be performed by a simulated or actual automatic initiation signal.

The Frequency for this SR is variable, depending on individual system design, with up to a 92 day interval. The 92 day Frequency corresponds to the testing requirements for pumps as contained in the ASME Boiler and Pressure Vessel Code, Section XI (Ref. 11); however, the design of fuel transfer systems is such that pumps operate automatically or must be started manually in order to maintain an adequate volume of fuel oil in the day tanks during or following DG testing. In such a case, a 31 day Frequency is appropriate. Since proper operation of fuel transfer systems is an inherent part of DG OPERABILITY, the Frequency of this SR should be modified to reflect individual designs.

SR 3.8.1.7

See SR 3.8.1.2.

SR 3.8.1.8

Manual transfer of each 4.16 kV ESF bus power supply from the normal offsite circuit to the alternate offsite circuit demonstrates the OPERABILITY of the alternate circuit distribution network to power the shutdown loads. The manual transfer should be performed using the DG to carry the loads (i.e., not a dead bus transfer). The 18 month Frequency of the Surveillance is based on engineering judgment taking into consideration the plant conditions required to perform the Surveillance, and is intended to be consistent with expected fuel cycle lengths. Operating experience has shown that these components usually pass the SR when performed on the 18 month Frequency. Therefore, the Frequency was concluded to be acceptable from a reliability standpoint.

BASES

SURVEILLANCE REQUIREMENTS (continued)

SR 3.8.1.8 (continued)

This SR is modified by two Notes. The reason for the Note 1 is that, during operation with the reactor critical, performance of this SR could cause perturbations to the electrical distribution systems that could challenge entwined steady state operation and, as a result, plant safety systems. Note 2 acknowledges that credit may be taken for unplanned events that satisfy this SR.

SR 3.8.1.9

Each DG is provided with an engine overspeed trip to prevent damage to the engine. Recovery from the transient caused by the loss of a large load could cause diesel engine overspeed, which, if excessive, might result in a trip of the engine. This Surveillance demonstrates the DG load response characteristics and capability to reject the largest single load without exceeding predetermined voltage and frequency and while maintaining a specified margin to the overspeed trip. The load referenced for Division II and Division III DGs is the 1689 kW high pressure core flooder (HPCF) pump; for the Division I DG, the 589 kW residual heat removal (RHR) pump. The Reactor Service Water (RSW) system load was not used. Even though the load to DG I is 1060 kW, that value consists of 2 RSW pumps of 530 kW each. As required by IEEE-308 (Ref. 12), the load rejection test is acceptable if the increase in diesel speed does not exceed 75% of the difference between synchronous speed and the overspeed trip setpoint, or 15% above synchronous speed, whichever is lower.

The time, voltage, and frequency tolerances specified in this SR are derived from Regulatory Guide 1.9 (Ref. 3) recommendations for response during load sequence intervals. The 3 seconds specified is equal to 60% of the 5 second load sequence interval associated with sequencing of this largest load. The voltage and frequency specified are consistent with the design range of the equipment powered by the DG. SR 3.8.1.9.a corresponds to the maximum frequency excursion, while SR 3.8.1.9.b and SR 3.8.1.9.c are steady state voltage and frequency values to which the system must recover following load rejection. The 18 month Frequency is consistent with the recommendation of Regulatory Guide 1.9 (Ref. 3).

In order to ensure that the DG is tested under load conditions that are as close to design basis conditions as possible, testing must be performed using a power factor $\leq$ 0.9. This power factor is chosen to be representative of the actual design basis inductive loading that the DG could experience.

BASES

SURVEILLANCE REQUIREMENTS (continued)

This SR has been modified by two Notes. The reason for Note 1 is that during operation with the reactor critical, performance of this SR could cause perturbations to the electrical distribution systems that could challenge continued steady state operation and, as a result, plant safety systems. Note 2 acknowledges that credit may be taken for unplanned events that satisfy this SR.

Reviewer's Note: The above MODE restrictions may be deleted if it can be demonstrated to the staff, on a plant specific basis, that performing the SR with the reactor in any of the restricted MODES can satisfy the following criteria, as applicable:

a. Performance of the SR will not render any safety system or component inoperable;

b. Performance of the SR will not cause perturbations to any of the electrical distribution systems that could result in a challenge to steady state operation or to plant safety systems; and

c. Performance of the SR, or failure of the SR, will not cause, or result in, an AOO with attendant challenge to plant safety systems.

SR 3.8.1.10

This Surveillance demonstrates the DG capability to reject a full load without overspeed tripping or exceeding the predetermined voltage limits. The DG full load rejection may occur because of a system fault or inadvertent breaker tripping. This Surveillance ensures proper engine generator load response under the simulated test conditions. This test simulates the loss of the total connected load that the DG experiences following a full load rejection and verifies that the DG does not trip upon loss of the load. These acceptance criteria provide DG damage protection. While the DG is not expected to experience this transient during an event, and continues to be available, this response ensures that the DG is not degraded for future application, including reconnection to the bus if the trip initiator can be corrected or isolated.

In order to ensure that the DG is tested under load conditions that are as close to design basis conditions as possible, testing must be performed using a power factor $\leq$ 0.9. This power factor is chosen to be representative of the actual design basis inductive loading that the DG would experience.

BASES

SURVEILLANCE REQUIREMENTS (continued)

SR 3.8.1.10 (continued)

The 18 month Frequency is consistent with the recommendation of Regulatory Guide 1.9 (Ref. 3) and is intended to be consistent with expected fuel cycle lengths.

This SR has been modified by two Notes. The reason for Note 1 is that during operation with the reactor critical, performance of this SR could cause perturbations to the electrical distribution systems that could challenge continued steady state operation and, as a result, plant safety systems. Note 2 acknowledges that credit may be taken for unplanned events that satisfy this SR.

Reviewer's Note: The above MODE restrictions may be deleted if it can be demonstrated to the staff, on a plant specific basis, that performing the SR with the reactor in any of the restricted MODES can satisfy the following criteria, as applicable:

a. Performance of the SR will not render any safety system or component inoperable;

b. Performance of the SR will not cause perturbations to any of the electrical distribution systems that could result in a challenge to steady state operation or to plant safety systems; and

c. Performance of the SR, or failure of the SR, will not cause, or result in, an AOO with attendant challenge to plant safety systems.

SR 3.8.1.11

As required by Regulatory Guide 1.9 (Ref. 3), paragraph 2.2.4, this Surveillance demonstrates the as designed operation of the standby power sources during loss of the offsite source. This test verifies all actions encountered from the loss of offsite power, including energization of the emergency buses and respective loads from the DG. It further demonstrates the capability of the DG to automatically achieve the required voltage and frequency within the specified time.

The DG auto-start time of 20 seconds is derived from requirements stated in DCD Tier 2, Chapter 8 (Ref. 2). The frequency should be restored to within 2% of nominal following a load sequence step. The Surveillance should be continued for a minimum of 5 minutes in order to demonstrate that all starting transients have decayed and stability has been achieved.

BASES

SURVEILLANCE REQUIREMENTS (continued)

SR 3.8.1.11 (continued)

The requirement to verify the connection and power supply of permanent and auto-connected loads is intended to satisfactorily show the relationship of these loads to the DG loading logic. In certain circumstances, many of these loads cannot actually be connected or loaded without undue hardship or potential for undesired operation. For instance, ECCS injection valves are not desired to be stroked open, high pressure injections systems are not capable of being operated at full flow, or RHR systems performing a decay heat removal function are not desired to be realigned to the ECCS mode of operation. In lieu of actual demonstration of the connection and loading of these loads, testing that adequately shows the capability of the DG system to perform these functions is acceptable. This testing may include any series of sequential, overlapping, or total steps so that the entire connection and loading sequence is verified.

The Frequency of 18 months is consistent with the recommendations of Regulatory Guide 1.9 (Ref. 3), paragraph 2.2.4, takes into consideration unit conditions required to perform the Surveillance, and is intended to be consistent with expected fuel cycle lengths.

This SR is modified by three Notes. The reason for Note 1 is to minimize wear and tear on the DGs during testing. For the purpose of this testing, the DGs must be started from standby conditions, that is, with the engine coolant and oil being continuously circulated and temperature maintained consistent with manufacturer recommendations. The reason for Note 2 is that performing the Surveillance would remove a required offsite circuit from service, perturb the electrical distribution system, and challenge plant safety systems.

Note 3 acknowledges that credit may be taken for unplanned events that satisfy this SR.

SR 3.8.1.12

This Surveillance demonstrates that the DG automatically starts and achieves the required voltage and frequency within the specified time (20 seconds) from the design basis actuation signal (LOCA signal) and operates for ≥ 5 minutes. The 5 minute period provides sufficient time to demonstrate stability. SR 3.8.1.12.d and SR 3.8.1.12.e ensure that permanently connected loads and emergency loads are energized from the offsite electrical power system on an ECCS signal without loss of offsite power.

BASES

SURVEILLANCE REQUIREMENTS (continued)

SR 3.8.1.12 (continued)

The requirement to verify the connection and power supply of permanent and autoconnected loads is intended to satisfactorily show the relationship of these loads to the loading logic for loading onto offsite power. In certain circumstances, many of these loads cannot actually be connected or loaded without undue hardship or potential for undesired operation. For instance, ECCS injection valves are not desired to be stroked open, high pressure injection systems are not capable of being operated at full flow, or RHR systems performing a decay heat removal function are not desired to be realigned to the ECCS mode of operation. In lieu of actual demonstration of the connection and loading of these loads, testing that adequately shows the capability of the DG system to perform these functions is acceptable. This testing may include any series of sequential, overlapping, or total steps so that the entire connection and loading sequence is verified.

The Frequency of 18 months takes into consideration plant conditions required to perform the Surveillance and is intended to be consistent with the expected fuel cycle lengths. Operating experience has shown that these components usually pass the SR when performed at the 18 month Frequency. Therefore, the Frequency was concluded to be acceptable from a reliability standpoint.

This SR is modified by three Notes. The reason for Note 1 is to minimize wear and tear on the DGs during testing. For the purpose of this testing, the DGs must be started from standby conditions, that is, with the engine coolant and oil being continuously circulated and temperature maintained consistent with manufacturer recommendations. The reason for Note 2 is that during operation with the reactor critical, performance of this SR could cause perturbations to the electrical distribution systems that could challenge continued steady state operation and, as a result, plant safety systems. Note 3 acknowledges that credit may be taken for unplanned events that satisfy this SR.

SR 3.8.1.13

This Surveillance demonstrates that DG non-critical protective functions (e.g., high jacket water temperature) are bypassed on a loss of voltage signal concurrent with an ECCS initiation test signal and critical protective functions (engine overspeed and generator differential current) trip the DG to avert substantial damage to the DG unit. The non-critical trips are bypassed during DBAs and provide an alarm on an abnormal engine condition. This alarm provides the operator with sufficient time to react

BASES

SURVEILLANCE REQUIREMENTS (continued)

SR 3.8.1.13 (continued)

appropriately. The DG availability to mitigate the DBA is more critical than protecting the engine against minor problems that are not immediately detrimental to emergency operation of the DG.

The 18 month Frequency is based on engineering judgment, taking into consideration plant conditions required to perform the Surveillance, and is intended to be consistent with expected fuel cycle lengths. Operating experience has shown that these components usually pass the SR when performed at the 18 month Frequency. Therefore, the Frequency was concluded to be acceptable from a reliability standpoint.

The SR is modified by two Notes. The reason for Note 1 is that performing the Surveillance removes a required DG from service. Note 2 acknowledges that credit may be taken for unplanned events that satisfy this SR.

Reviewer's Note: The above MODE restrictions may be deleted if it can be demonstrated to the staff, on a plant specific basis, that performing the SR with the reactor in any of the restricted MODES can satisfy the following criteria, as applicable:

a. Performance of the SR will not render any safety system or component inoperable;

b. Performance of the SR will not cause perturbations to any of the electrical distribution systems that could result in a challenge to steady state operation or to plant safety systems; and

c. Performance of the SR, or failure of the SR, will not cause, or result in, an AOO with attendant challenge to plant safety systems.

SR 3.8.1.14

Regulatory Guide 1.9 (Ref. 3), paragraph 2.2.9, requires demonstration once per 18 months that the DGs can start and run continuously at full load capability for an interval of not less than 24 hours – 22 hours of which is at a load equivalent to 90 to 100% of the continuous rating of the DG, and 2 hours of which is at a load equivalent to 105 to 110% of the continuous rating of the DG. The DG starts for this Surveillance can be performed either from standby or hot conditions. The provisions for prelube and warmup, discussed in SR 3.8.1.2, and for gradual loading, discussed in SR 3.8.1.3, are applicable to this SR.

BASES

SURVEILLANCE REQUIREMENTS (continued)

SR 3.8.1.14 (continued)

In order to ensure that the DG is tested under load conditions that are as close to design conditions as possible, testing must be performed using a power factor ≤ 0.9. This power factor is chosen to be representative of the actual design basis inductive loading that the DG could experience.

The 18 month Frequency is consistent with the recommendations of Regulatory Guide 1.9 (Ref. 3), paragraph 2.2.9; takes into consideration plant conditions required to perform the Surveillance; and is intended to be consistent with expected fuel cycle lengths.

This Surveillance is modified by three Notes. Note 1 states that momentary transients due to changing bus loads do not invalidate this test. The load band is provided to avoid routine overloading of the DG. Routine overloading may result in more frequent tear down inspections in accordance with vendor recommendations in order to maintain DG OPERABILITY. Similarly, momentary power factor transients above the limit do not invalidate the test. The reason for Note 2 is that during operation with the reactor critical, performance of this SR could cause perturbations to the electrical distribution systems that would challenge continued steady state operation and, as a result, plant safety systems. Note 3 acknowledges that credit may be taken for unplanned events that satisfy this SR.

SR 3.8.1.15

This Surveillance demonstrates that the diesel engine can restart from a hot condition, such as subsequent to shutdown from normal Surveillances, and achieve the required voltage and frequency within 20 seconds. The 20-second time is derived from the requirements set forth in DCD Tier 2, Chapter 8 (Ref. 2).

The 18 month Frequency is consistent with the recommendations of Regulatory Guide 1.9 (Ref. 3), paragraph 2.2.10.

This SR is modified by two Notes. Note 1 ensures that the test is performed with the diesel sufficiently hot. The requirement that the diesel has operated for at least 2 hours at full load conditions prior to performance of this Surveillance is based on manufacturer recommendations for achieving hot conditions. The load band is provided to avoid routine overloading of the DG. Routine overloads may result in more frequent tear down inspections in accordance with vendor recommendations in order to maintain DG OPERABILITY. Momentary

BASES

SURVEILLANCE REQUIREMENTS (continued)

SR 3.8.1.15 (continued)

transients due to changing bus loads do not invalidate this test. Note 2 allows all DG starts to be preceded by an engine prelube period to minimize wear and tear on the diesel during testing.

SR 3.8.1.16

As required by Regulatory Guide 1.9 (Ref. 3), paragraph 2.2.11, this Surveillance ensures that the manual synchronization and automatic load transfer from the DG to the offsite source can be made and that the DG can be returned to ready-to-load status when offsite power is restored. It also ensures that the auto-start logic is reset to allow the DG to reload if a subsequent loss of offsite power occurs. The DG is considered to be in ready-to-load status when the DG is at required speed and voltage, the output breaker is open and can receive an auto-close signal on bus undervoltage, and the load timers are reset.

The Frequency of 18 months is consistent with the recommendations of Regulatory Guide 1.9 (Ref. 3), paragraph 2.2.11, and takes into consideration plant conditions required to perform the Surveillance.

This SR is modified by two Notes. The reason for the Note 1 is that performing the Surveillance would remove a required offsite circuit from service, perturb the electrical distribution system, and challenge safety systems. Note 2 acknowledges that credit may be taken for unplanned events that satisfy this SR.

SR 3.8.1.17

Demonstration of the test mode override ensures that the DG availability under accident conditions is not compromised as the result of testing. Interlocks to the LOCA sensing circuits cause the DG to automatically reset to ready-to-load operation of an ECCS initiation signal is received during operation in the test mode. Ready-to-load operation is defined as the DG running at required speed and voltage with the DG output breaker open. These provisions for automatic switchover are required by IEEE-308 (Ref. 12), paragraph 6.2.6(2).

The requirement to automatically energize the emergency loads with offsite power is essentially identical to that of SR 3.8.1.12. The intent in the requirement associated with SR 3.8.1.17.b is to show that the emergency loading is not affected by the DG operation in test mode. In

BASES

SURVEILLANCE REQUIREMENTS (continued)

SR 3.8.1.17 (continued)

lieu of actual demonstration of connection and loading of loads, testing that adequately shows the capability of the emergency loads to perform these functions is acceptable. This testing may include any series of sequential, overlapping, or total steps so that the entire connection and loading sequence is verified.

The 18 month Frequency is consistent with the recommendations of Regulatory Guide 1.9 (Ref. 3), paragraph 2.2.13; takes into consideration plant conditions required to perform the Surveillance; and is intended to be consistent with expected fuel cycle lengths.

This SR has been modified by two Notes. The reason for Note 1 is that performing the Surveillance would remove a required offsite circuit from service, perturb the electrical distribution system, and challenge safety systems. Note 2 acknowledges that credit may be taken for unplanned events that satisfy this SR.

SR 3.8.1.18

As required by Regulatory Guide 1.9 (Ref. 3), paragraph 2.2.6, each DG is required to demonstrate proper operation for the DBA loading sequence to ensure that voltage and frequency are maintained within the required limits. Under accident conditions, prior to connecting the DGs to their respective bus, all loads are shed except load center feeders and those motor control centers that power Class 1E loads (referred to as “permanently connected” loads). Upon reaching 90% required voltage and frequency, the DGs are then connected to their respective bus. Load shedding and buses-ready-to-load signals are generated by the control systems for the electrical power distribution system. Individual timers for each major load are reset and started by their electrical power distribution systems signals (Ref. 2). The 10% load sequence time interval tolerance ensures that sufficient time exists for the DG to restore frequency and voltage prior to applying the next load and that safety analysis assumptions regarding ESF equipment time delays are not violated. Regulatory Guide 1.9 (Ref. 3) provides a summary of the automatic loading of ESF buses.

The Frequency of 18 months is consistent with the recommendations of Regulatory Guide 1.9 (Ref. 3), paragraph 2.2.6; takes into consideration plant conditions required to perform the Surveillance; and is intended to be consistent with expected fuel cycle lengths.

BASES

SURVEILLANCE REQUIREMENTS (continued)

SR 3.8.1.18 (continued)

This SR is modified by two Notes. The reason for Note 1 is that performing the Surveillance during these MODES would remove a required offsite circuit from service, perturb the electrical distribution system, and challenge plant safety systems. Note 2 acknowledges that credit may be taken for unplanned events that satisfy this SR.

Reviewer's Note: The above MODE restrictions may be deleted if it can be demonstrated to the staff, on a plant specific basis, that performing the SR with the reactor in any of the restricted MODES can satisfy the following criteria, as applicable:

a. Performance of the SR will not render any safety system or component inoperable;

b. Performance of the SR will not cause perturbations to any of the electrical distribution systems that could result in a challenge to steady state operation or to plant safety systems; and

c. Performance of the SR, or failure of the SR, will not cause, or result in, an AOO with attendant challenge to plant safety systems.

SR 3.8.1.19

In the event of a DBA coincident with a loss of offsite power, the DGs are required to supply the necessary power to ESF systems so that the fuel, RCS, and containment design limits are not exceeded.

This Surveillance demonstrates the DG operation, as discussed in the Bases for SR 3.8.1.11, during a loss of offsite power actuation test signal in conjunction with an ECCS initiation signal. In lieu of actual demonstration of connection and loading of loads, testing that adequately shows the capability of the DG system to perform these functions is acceptable. This testing may include any series of sequential, overlapping, or total steps so that the entire connection and loading sequence is verified.

The Frequency of 18 months takes into consideration plant conditions required to perform the Surveillance and is intended to be consistent with an expected fuel cycle length of 18 months.

BASES

SURVEILLANCE REQUIREMENTS (continued)

SR 3.8.1.19 (continued)

This SR is modified by three Notes. The reason for Note 1 is to minimize wear and tear on the DGs during testing. For the purpose of this testing, the DGs must be started from standby conditions, that is, with the engine coolant and oil being continuously circulated and temperature maintained consistent with manufacturer recommendations. The reason for Note 2 is that performing the Surveillance would remove a required offsite circuit from service, perturb the electrical distribution system, and challenge plant safety systems. Note 3 acknowledges that credit may be taken for unplanned events that satisfy this SR.

SR 3.8.1.20

This Surveillance demonstrates that the DG starting independence has not been compromised. Also, this Surveillance demonstrates that each engine can achieve proper speed within the specified time when the DGs are started simultaneously.

The 10 year Frequency is consistent with the recommendations of Regulatory Guide 1.9 (Ref. 3), paragraph 2.2.14, and Regulatory Guide 1.137 (Ref. 9), paragraph C.2.f.

This SR is modified by a Note. The reason for the Note is to minimize wear on the DG during testing. For the purpose of this testing, the DGs must be started from standby conditions, that is, with the engine coolant and oil continuously circulated and temperature maintained consistent with manufacturer recommendations.

Diesel Generator Test Schedule

The DG test schedule (Table 3.8.1-1) implements the recommendations of Revision 3 to Regulatory Guide 1.9 (Ref. 3). The purpose of this test schedule is to provide timely test data to establish a confidence level associated with the goal to maintain DG reliability at > 0.95 per test.

According to Regulatory Guide 1.9 (Ref. 3), Revision 3, each DG unit should be tested at least once every 31 days. Whenever a DG has experienced 4 or more valid failures in the last 25 valid tests, the maximum time between tests is reduced to 7 days. Four failures in 25 valid tests is a failure rate of 0.16, or the threshold of acceptable DG performance, and hence may be an early indication of the degradation of DG reliability. When considered in the light of a long history of tests,

BASES

SURVEILLANCE REQUIREMENTS (continued)

Diesel Generator Test Schedule (continued)

however, 4 failures in the last 25 valid tests may only be a statistically probable distribution of random events. Increasing the test Frequency allows a more timely accumulation of additional test data upon which to base judgment of the reliability of the DG. The increased test Frequency must be maintained until seven consecutive failure free tests have been performed.

The Frequency for accelerated testing is 7 days, but no less than 24 hours. Therefore, the interval between tests should be no less than 24 hours, and no more than 7 days. A successful test at an interval of less than 24 hours should be considered an invalid test and not count towards the seven consecutive failure free starts. A test interval in excess of 7 days constitutes a failure to meet SRs.

REFERENCES

1. 10 CFR 50, Appendix A, GDC 17.
2. DCD Tier 2, Chapter 8.
3. Regulatory Guide 1.9, Revision 3.
4. DCD Tier 2, Chapter 6.
5. DCD Tier 2, Chapter 15.
6. Regulatory Guide 1.93.
7. Generic Letter 84-15, July 2, 1984.
8. 10 CFR 50, Appendix A, GDC 18.
9. Regulatory Guide 1.137.
10. ANSI C84.1, 1982.
11. ASME, Boiler and Pressure Vessel Code, Section XI.
12. IEEE Standard 308.

B 3.8 ELECTRICAL POWER SYSTEMS

B 3.8.2 AC Sources – Refueling

BASES

BACKGROUND

A description of the AC sources is provided in the Bases for LCO 3.8.1, "AC Sources – Operating."

APPLICABLE SAFETY ANALYSES

The OPERABILITY of the minimum AC sources during MODE 5 with water level in the refueling cavity ≥ 7.0 meters above the reactor pressure vessel flange ensures that:

a. The unit can be maintained in the shutdown or refueling condition for extended periods;

b. Sufficient instrumentation and control capability is available for monitoring and maintaining the unit status; and

c. Adequate AC electrical power is provided to mitigate events postulated during shutdown, such as an inadvertent drain down of the vessel, loss of decay heat removal, or a fuel handling accident.

In general, when the unit is shut down the Technical Specifications (TS) requirements ensure that the unit has the capability to mitigate the consequences of postulated accidents. However, assuming a single failure and concurrent loss of all offsite or loss of all onsite power is not required. The rationale for this is based on the fact that many Design Basis Accidents (DBAs) that are analyzed in MODES 1, 2, and 3 have no specific analyses in MODES 4 and 5. Worst case bounding events are deemed not credible in MODES 4 and 5 because the energy contained within the reactor pressure boundary, reactor coolant temperature and pressure, and the corresponding stresses result in the probabilities of occurrence significantly reduced or eliminated, and minimal consequences. These deviations from DBA analysis assumptions and design requirements during shutdown conditions are allowed by the LCO for required systems.

During MODES 1, 2, and 3, various deviations from the analysis assumptions and design requirements are allowed within the ACTIONS. This allowance is in recognition that certain testing and maintenance activities must be conducted provided an acceptable level of risk is not exceeded. During MODES 4 and 5, performance of a significant number of required testing and maintenance activities is also required. In MODES 4 and 5, the activities are generally planned and administratively controlled. Relaxations from typical MODE 1, 2, and 3 LCO requirements are acceptable during shutdown MODES based on:

BASES

APPLICABLE SAFETY ANALYSES (continued)

a. The fact that time in an outage is limited. This is a risk prudent goal as well as utility economic consideration.

b. Requiring appropriate compensatory measures for certain conditions. These may include administrative controls, reliance on systems that do not necessarily meet typical design requirements applied to systems credited in operating MODE analyses, or both.

c. Prudent utility consideration of the risk associated with multiple activities that could affect multiple systems.

d. Maintaining, to the extent practical, the ability to perform required functions (even if not meeting MODE 1, 2, and 3 OPERABILITY requirements) with systems assumed to function during an event.

In the event of an accident during shutdown, this LCO ensures the capability of supporting systems necessary to avoid immediate difficulty, assuming either a loss of all offsite power or a loss of all onsite (diesel generator (DG)) power.

The AC sources satisfy Criterion 3 of the NRC Policy Statement.

LCO

One offsite circuit capable of supplying the onsite Class 1E power distribution subsystem(s) of LCO 3.8.10, “Distribution Systems – Shutdown,” ensures that all required loads on Division I, Division II, and Division III are powered from offsite power. One or more OPERABLE DG(s) available in standby to supply electrical power to required OPERABLE features via the associated Engineered Safety Feature (ESF) buses that are required to be OPERABLE by LCO 3.8.10, ensures a diverse power source is available, assuming a loss of the offsite circuit. Together, OPERABILITY of the required offsite circuit and DG(s) ensures the availability of sufficient AC sources to operate the plant in a safe manner and to mitigate the consequences of postulated events during shutdown (e.g., fuel handling accidents, reactor vessel drain down, and loss of decay heat removal).

The qualified offsite circuit must be capable of maintaining rated frequency and voltage while connected to ESF bus(es), and of accepting required loads during an accident. The qualified offsite circuit is either the normal or alternate preferred power circuits to AC Electric Power Distribution System that are described in DCD Tier 2, Chapter 8 and are part of the licensing basis for the plant. The normal preferred circuit consists of the switching stations breaker to the main transformers, the generator breaker, the disconnect links to the unit auxiliary transformers, and the circuit path from the offsite transmission network to all of the

BASES

LCO (continued)

4.16 kV ESF buses required by LCO 3.8.10 including feeder breakers at the 4.16 kV ESF buses. The alternate preferred circuit consists of the switching station breakers to the reserve transformers and the circuit path from the offsite transmission network to all of the 4.16 kV ESF buses required by LCO 3.8.10 including feeder breakers at the 4.16 kV ESF buses.

Each required DG must be capable of starting, accelerating to required speed and voltage, and connecting to its respective ESF bus on detection of bus undervoltage, and accepting required loads. This sequence must be accomplished within 20 seconds. Each DG must also be capable of accepting required loads within the assumed loading sequence intervals, and must continue to operate until offsite power can be restored to the ESF buses. These capabilities are required to be met from a variety of initial conditions such as: DG in standby with the engine hot, DG in standby with engine at ambient conditions, and DG operating in parallel test mode.

Proper sequencing of loads is a required function for both DG and offsite circuit OPERABILITY.

During a shutdown condition, it is acceptable for a single offsite power circuit to supply all required divisions of electrical power.

As described in Applicable Safety Analyses, in the event of an accident during shutdown, the TS are designed to maintain the plant in a condition such that, even with a single failure, the plant will not be in immediate difficulty.

APPLICABILITY

The AC sources required to be OPERABLE in MODE 5 with water level in the refueling cavity ≥ 7.0 meters above the reactor pressure vessel flange during movement of irradiated fuel assemblies in the secondary containment provide assurance that:

a. Systems are available to provide adequate coolant inventory makeup to maintain irradiated fuel in the core covered with coolant in case of an inadvertent drain down of the reactor vessel;

b. Systems needed to mitigate a fuel handling accident are available;

c. Systems necessary to mitigate the effects of events that can lead to core damage during shutdown are available; and

d. Instrumentation and control capability is available for monitoring and maintaining the unit in a cold shutdown condition or refueling condition.

BASES

APPLICABILITY (continued)

e. Systems are available to remove decay heat from the irradiated fuel in the core.

The AC power requirements for MODES 1, 2, and 3 are covered in LCO 3.8.1; and for MODE 4, and MODE 5 with the water level in the refueling cavity ≤ 7.0 meters above the reactor pressure vessel flange, in LCO 3.8.11.

ACTIONS

A.1.1 and A.1.2

An offsite circuit is considered inoperable if it is not available to one required ESF bus. If two or more ESF buses are required per LCO 3.8.10, division(s) with offsite power still available may be capable of supporting sufficient required features to allow continuation of CORE ALTERATIONS, fuel movement, and operations with a potential for draining the reactor vessel.

However, should any required features still have no power available from an OPERABLE offsite circuit, Required Action A.1.2 requires declaring such features inoperable so that appropriate restrictions can be implemented in accordance with the affected required feature(s) LCOs' ACTIONS.

A.2.1, A.2.2, A.2.3, and A.2.4

With the offsite circuit not available to some or all required ESF buses, Required Action A.1.2 allows the choice of declaring affected required features inoperable. Since this option may involve undesirable administrative efforts, Required Actions A.2.1, A.2.2, A.2.3, and A.2.4 alternatively allow performance of other sufficiently conservative actions, thereby avoiding any undesirable administrative efforts. With the required offsite circuit inoperable (unable to supply all required ESF buses), the minimum required diversity of AC power sources is not available. It is, therefore, required to suspend CORE ALTERATIONS, movement of irradiated fuel assemblies in the secondary containment, and activities that could potentially result in inadvertent draining of the reactor vessel.

Suspension of these activities shall not preclude completion of actions to establish a safe conservative condition. These actions minimize the probability of the occurrence of postulated events. It is further required to initiate action immediately to restore the required offsite circuit to OPERABLE status and to continue this action until restoration is accomplished in order to provide the necessary (and preferred) AC power to the plant safety systems.

BASES

ACTIONS (continued)

Notwithstanding performance of the above conservative Required Actions, the plant is still without sufficient AC power sources to operate in a safe manner. Therefore, action must be initiated to restore the minimum required AC power sources and continue until the LCO requirements are restored.

The Completion Time of immediately is consistent with the required times for actions requiring prompt attention. The restoration of the required AC electrical power sources should be completed as quickly as possible in order to minimize the time during which the plant safety systems may be without sufficient power.

Pursuant to LCO 3.0.6, the Distribution System ACTIONS are not entered even if all AC sources to it are inoperable, resulting in de-energization. Therefore, the Required Actions of Condition A have been modified by a Note to indicate that when Condition A is entered with no AC power to one ESF bus, ACTIONS for LCO 3.8.10 must be immediately entered. This Note allows Condition A to provide requirements for the loss of the offsite circuit whether or not a division is de-energized. LCO 3.8.10 provides the appropriate restrictions for the situation involving a de-energized division.

B.1, B.2, B.3, and B.4

When one or more of the required DGs is inoperable, the required diversity of AC power sources to plant safety systems is not available. Required Actions B.1, B.2, and B.3, therefore, suspend CORE ALTERATIONS, movement of irradiated fuel assemblies in the secondary containment, and activities that could potentially result in inadvertent draining of the reactor vessel.

Suspension of these activities shall not preclude completion of actions to establish a safe conservative condition.

These actions minimize the probability of the occurrence of postulated events. It is further required to initiate action immediately to restore the required DG(s) OPERABLE status and to continue this action until restoration is accomplished in order to provide the required diversity of AC power sources to plant safety systems.

BASES

SURVEILLANCE REQUIREMENTS

SR 3.8.2.1

SR 3.8.2.1 requires the SRs from LCO 3.8.1 that are necessary for ensuring the OPERABILITY of the AC sources in other than MODES 1, 2, and 3. SR 3.8.1.8 is not required to be met because only one offsite power circuit is required to be OPERABLE. SR 3.8.1.14 is not required to be met because the required OPERABLE DG(s) is(are) not required to undergo periods of being synchronized to the offsite circuit. SR 3.8.1.20 is excepted because starting independence is not required with the DG that is not required to be OPERABLE. Refer to the corresponding Bases for LCO 3.8.1 for a discussion of each SR.

This SR is modified by two notes. The reason for Note 1 is to preclude requiring the OPERABLE DG from being paralleled with the offsite power network or otherwise rendered inoperable during the performance of SRs. With limited AC sources available, a single event could compromise both the required circuit and the DG. It is the intent that these SRs must still be capable of being met, but actual performance is not required during periods when the DG is required to be OPERABLE.

The reason for Note 2 is to require tests only on those DGs whose associated ECCS loads are required to be OPERABLE.

REFERENCES

None.

B 3.8 ELECTRICAL POWER SYSTEMS

B 3.8.3 Diesel Fuel Oil, Lube Oil, and Starting Air Subsystem

BASES

BACKGROUND

Each diesel generator (DG) is provided with a storage tank having a fuel oil capacity sufficient to operate that DG for a period of 7 days while the DG is supplying maximum post loss of coolant accident load demand (Ref. 1). The maximum load demand is calculated using the assumption that at least two DGs are available. This onsite fuel oil capacity is sufficient to operate the DGs for longer than the time to replenish the onsite supply from outside sources.

Fuel oil is transferred from each storage tank to its respective day tank by two transfer pumps associated with each storage tank. Redundancy of pumps and piping precludes the failure of one pump, or the rupture of any pipe, valve, or tank to result in the loss of more than one DG. All outside tanks, pumps, and piping are located underground. The fuel oil level in the storage tank is indicated in the control room.

For proper operation of the standby DGs, it is necessary to ensure the proper quality of the fuel oil. Regulatory Guide 1.137 (Ref. 2) addresses the recommended fuel oil practices as supplemented by ANSI N195 (Ref. 3). The fuel oil properties governed by these SRs are the water and sediment content, the kinematic viscosity, specific gravity (or API gravity), and impurity level.

The DG lubrication system is designed to provide sufficient lubrication to permit proper operation of its associated DG under all loading conditions. The system is required to circulate the lube oil to the diesel engine working surfaces and to remove excess heat generated by friction during operation. Each engine oil sump contains an inventory capable of supporting a minimum of 7 days of operation. The onsite storage in addition to the engine oil sump is sufficient to ensure 7 days of continuous operation. This supply is sufficient to allow the operator to replenish lube oil from outside sources.

Each DG has redundant air start subsystems, each with adequate capacity for five successive start attempts on the DG without recharging the air start receiver(s). One subsystem with an OPERABLE air start receiver satisfies OPERABILITY requirements for its associated DG.

BASES

APPLICABLE SAFETY ANALYSES

The initial conditions of Design Basis Accident (DBA) and transient analyses in DCD Tier 2, Chapter 6 (Ref. 4), and Chapter 15 (Ref. 5), assume Engineered Safety Feature (ESF) systems are OPERABLE. The DGs are designed to provide sufficient capacity, capability, redundancy, and reliability to ensure the availability of necessary power to ESF systems so that fuel, reactor coolant system, and containment design limits are not exceeded. These limits are discussed in more detail in the Bases for Section 3.2, Power Distribution Limits; Section 3.4, Reactor (Coolant System (RCS); and Section 3.6, Containment Systems.

Since diesel fuel oil, lube oil, and starting air subsystem support the operation of the standby AC power sources, they satisfy Criterion 3 of the NRC Policy Statement.

LCO

Stored diesel fuel oil is required to have sufficient supply for 7 days of full load operation. It is also required to meet specific standards for quality. Additionally, sufficient lube oil supply must be available to ensure the capability to operate at full load for 7 days. This requirement, in conjunction with an ability to obtain replacement supplies within 7 days, supports the availability of DGs required to shut down the reactor and to maintain it in a safe condition for an anticipated operational occurrence (AOO) or a postulated DBA with loss of offsite power. DG day tank fuel requirements, as well as transfer capability from the storage tank to the day tank, are addressed in LCO 3.8.1, “AC Sources – Operating,” and LCO 3.8.2, “AC Sources – Refueling.”

The starting air system is required to have a minimum capacity for five successive DG start attempts without recharging the air start receivers. One subsystem with an OPERABLE air start receiver satisfies OPERABILITY requirements for its associated DG.

APPLICABILITY

The AC sources, LCO 3.8.1 and LCO 3.8.2, are required to ensure the availability of the required power to shut down the reactor and maintain it in a safe shutdown condition after an AOO or a postulated DBA. Since stored diesel fuel oil, lube oil, and starting air subsystem support LCO 3.8.1 and LCO 3.8.2, stored diesel fuel oil, lube oil, and starting air are required to be within limits when the associated DG is required to be OPERABLE.

ACTIONS

A.1

In this Condition, the 7 day fuel oil supply for a DG is not available. However, the Condition is restricted to fuel oil level reductions that maintain at least a 6 day supply. These circumstances may be caused by events such as:

BASES

ACTIONS (continued)

A.1 (continued)

a. Full load operation required after an inadvertent start while at minimum required level; or

b. Feed and bleed operations that may be necessitated by increasing particulate levels or any number of other oil quality degradations.

This restriction allows sufficient time for obtaining the requisite replacement volume and performing the analyses required prior to addition of the fuel oil to the tank. A period of 48 hours is considered sufficient to complete restoration of the required level prior to declaring the DG inoperable. This period is acceptable based on the remaining capacity (> 6 days), the fact that procedures will be initiated to obtain replenishment, and the low probability of an event during this brief period.

B.1

With lube oil inventory < 7,300 liters, sufficient lube oil to support 7 days of continuous DG operation at full load conditions may not be available. However, the Condition is restricted to lube oil volume reductions that maintain at least a 6 day supply. This restriction allows sufficient time for obtaining the requisite replacement volume. A period of 48 hours is considered sufficient to complete restoration of the required volume prior to declaring the DG inoperable. This period is acceptable based on the remaining capacity (> 6 days), the low rate of usage, the fact that procedures will be initiated to obtain replenishment, and the low probability of an event during this brief period.

C.1

This Condition is entered as a result of a failure to meet the acceptance criterion for particulates. Normally, trending of particulate levels allows sufficient time to correct high particulate levels prior to reaching the limit of acceptability. Poor sample procedures (bottom sampling), contaminated sampling equipment, and errors in laboratory analysis can produce failures that do not follow a trend. Since the presence of particulate does not mean failure of the fuel oil to burn properly in the diesel engine, since particulate concentration is unlikely to change significantly between Surveillance Frequency intervals, and since proper engine performance has been recently demonstrated (within 31 days), it is prudent to allow a brief period prior to declaring the associated DG inoperable. The 7 day Completion Time allows for further evaluation, resampling, and re-analysis of the DG fuel oil.

BASES

ACTIONS (continued)

D.1

With the new fuel oil properties defined in the Bases for SR 3.8.3.3 not within the required limits, a period of 30 days is allowed for restoring the stored fuel oil properties. This period provides sufficient time to test the stored fuel oil to determine that the new fuel oil, when mixed with previously stored fuel oil, remains acceptable, to restore the stored fuel oil properties. This restoration may involve feed and bleed procedures, filtering, or a combination of these procedures. Even if a DG start and load was required during this time interval and the fuel oil properties were outside limits, there is high likelihood that the DG would still be capable of performing its intended function.

E.1

With starting air receiver pressure < 3,000 MPaG, sufficient capacity for five successive DG start attempts does not exist. However, as long as the receiver pressure is > 2,700 MPaG, there is adequate capacity for at least one start attempt, and the DG can be considered OPERABLE while the air receiver pressure is restored to the required limit. A period of 48 hours is considered sufficient to complete restoration to the required pressure prior to declaring the DG inoperable. This period is acceptable based on the remaining air start capacity, the fact that most DG starts are accomplished on the first attempt, and the low probability of an event during this brief period.

F.1

With a Required Action and associated Completion Time not met, or the stored diesel fuel oil or lube oil not within limits for reasons other than addressed by Conditions A through E, the associated DG may be incapable of performing its intended function and must be immediately declared inoperable.

SURVEILLANCE REQUIREMENTS

SR 3.8.3.1

This SR provides verification that there is an adequate inventory of fuel oil in the storage tanks to support each DG's operation for 7 days at full load. The 7 day period is sufficient time to place the unit in a safe shutdown condition and to bring in replenishment fuel from an offsite location.

The 31 day Frequency is adequate to ensure that a sufficient supply of fuel oil is available, since low level alarms are provided and unit operators would be aware of any large uses of fuel oil during this period.

BASES

SURVEILLANCE REQUIREMENTS (continued)

SR 3.8.3.2

This Surveillance ensures that sufficient lube oil inventory is available to support at least 7 days of full load operation for each DG. The 7,300 liter requirement is based on the DG manufacturer's consumption values for the run time of the DG. Implicit in this SR is the requirement to verify the capability to transfer the lube oil from its storage location to the DG when the DG lube oil sump does not hold adequate inventory for 7 days of full load operation without the level reaching the manufacturer's recommended minimum level.

A 31 day Frequency is adequate to ensure that a sufficient lube oil supply is onsite, since DG starts and run times are closely monitored by the plant staff.

SR 3.8.3.3

The tests listed below are a means of determining whether new fuel oil is of the appropriate grade and has not been contaminated with substances that would have an immediate detrimental impact on diesel engine combustion and operation. If results from these tests are within acceptable limits, the fuel oil may be added to the storage tanks without concern for contaminating the entire volume of fuel oil in the storage tanks. These tests are to be conducted prior to adding the new fuel to the storage tank(s), but in no case is the time between receipt of new fuel and conducting the tests to exceed 31 days. The tests, limits, and applicable ASTM Standards are as follows:

a. Sample the new fuel oil in accordance with ASTM D4057-06 (Ref. 6);

b. Verify in accordance with the tests specified in ASTM D975-08 (Ref. 6) that the sample has an absolute specific gravity at 15.6/15.6°C of ≥ 0.83° and ≤ 0.89° (or an API gravity at 15.6°C of ≥ 27° and ≤ 39°), a kinematic viscosity at 40°C of ≥ 1.9 mm^2/s and ≤ 4.1 mm^2/s, and a flash point of ≥ 51.7°C; and

c. Verify that the new fuel oil has a clear and bright appearance with proper color when tested in accordance with ASTM D4176-04 (Ref. 6).

Failure to meet any of the above limits is cause for rejecting the new fuel oil, but does not represent a failure to meet the LCO since the fuel oil is not added to the storage tanks.

BASES

SURVEILLANCE REQUIREMENTS (continued)

SR 3.8.3.3 (continued)

Within 31 days following the initial new fuel oil sample, the fuel oil is analyzed to establish that the other properties specified in Table 1 of ASTM D975-08 (Ref. 6) are met for new fuel oil when tested in accordance with ASTM D975-08 (Ref. 6), except that the analysis for sulfur may be performed in accordance with ASTM D1552-07 (Ref. 6) or ASTM D2622-08 (Ref. 6). The 31 day period is acceptable because the fuel oil properties of interest, even if not within stated limits, would not have an immediate effect on DG operation. This Surveillance ensures the availability of high quality fuel oil for the DGs.

Fuel oil degradation during long term storage shows up as an increase in particulate, mostly due to oxidation. The presence of particulate does not mean that the fuel oil will not burn properly in a diesel engine. However, the particulate can cause fouling of filters and fuel oil injection equipment, which can cause engine failure.

Particulate concentrations should be determined in accordance with ASTM D2276-06, Method A (Ref. 6). This method involves a gravimetric determination of total particulate concentration in the fuel oil and has a limit of 10 milligrams/liter. It is acceptable to obtain a field sample for subsequent laboratory testing in lieu of field testing.

The Frequency of this Surveillance takes into consideration fuel oil degradation trends indicating that particulate concentration is unlikely to change between Frequency intervals.

SR 3.8.3.4

This Surveillance ensures that, without the aid of the refill compressor, sufficient air start capacity for each DG is available. The system design requirements provide for a minimum of five engine start cycles without recharging. A start cycle is defined by the DG vendor, but usually is measured in terms of time (seconds of cranking) or engine cranking speed. The pressure specified in this SR is intended to reflect the lowest value at which the five starts can be accomplished.

The 31 day Frequency takes into account the capacity, capability, redundancy, and diversity of the AC sources and other indications available in the control room, including alarms, to alert the operator to below normal air start pressure.

BASES

SURVEILLANCE REQUIREMENTS (continued)

SR 3.8.3.5

Microbiological fouling is a major cause of fuel oil degradation. There are numerous bacteria that can grow in fuel oil and cause fouling, but all must have a water environment in order to survive. Removal of water from the storage tanks once every 31 days eliminates the necessary environment for bacterial survival. This is the most effective means of controlling microbiological fouling. In addition, it eliminates the potential for water entrainment in the fuel oil during DG operation. Water may come from any of several sources, including condensation, ground water, rain water, contaminated fuel oil, and from breakdown of the fuel oil by bacteria. Frequent checking for and removal of accumulated water minimizes fouling and provides data regarding the watertight integrity of the fuel oil system. The Surveillance Frequencies are established by Regulatory Guide 1.137 (Ref. 2). This SR is for preventive maintenance. The presence of water does not necessarily represent a failure of this SR provided that accumulated water is removed during performance of the Surveillance.

SR 3.8.3.6

Draining of the fuel oil stored in the supply tanks, removal of accumulated sediment, and tank cleaning are required at 10 year intervals by Regulatory Guide 1.137 (Ref. 2), paragraph 2.f. This SR is typically performed in conjunction with the ASME Boiler and Pressure Vessel Code, Section X I (Ref. 7), examinations of the tanks. To preclude the introduction of surfactants in the fuel oil system, the cleaning should be accomplished using sodium hypochlorite solutions, or their equivalent, rather than soap or detergents. This SR is for preventive maintenance. The presence of sediment does not necessarily represent a failure of this SR provided that accumulated sediment is removed during performance of the Surveillance.

REFERENCES

1. DCD Tier 2, Section 9.5.4.
2. Regulatory Guide 1.137.
3. ANSI N195, Appendix B, 1976.
4. DCD Tier 2, Chapter 6.
5. DCD Tier 2, Chapter 15.

BASES

REFERENCES (continued)

6. ASTM Standards: D4057-06; D975-08; D4176-04; D975- 08; D1552-07; D2622-08; D2276-06.

7. ASME, Boiler and Pressure Vessel Code, Section XI.

B 3.8 ELECTRICAL POWER SYSTEMS

B 3.8.4 DC Sources – Operating

BASES

BACKGROUND

The station DC electrical power system provides the AC power system with control power. It also provides both motive and control power to selected safety related equipment. As required by 10 CFR 50, Appendix A, GDC 17 (Ref. 1), the DC electrical power system is designed to have sufficient independence, redundancy, and testability to perform its safety functions, assuming a single failure. The DC electrical power system also conforms to the requirements of Regulatory Guide 1.6 (Ref. 2) and IEEE-308 (Ref. 3).

The 125 VDC electrical power system consists of four independent Class 1E DC electrical power subsystems, Divisions I, II, III, and IV. Each subsystem consists of a battery, associated battery charger, and all the associated control equipment and interconnecting cabling. In addition there are two standby backup chargers. One is shared by Divisions I and II, and the other is shared by Divisions III and IV. However, no credit is taken for the backup battery chargers which are not required to be OPERABLE or surveillance tested.

During normal operation, the DC loads are powered from the battery chargers with the batteries floating on the system. In case of loss of AC power to the battery charger, the DC loads are automatically powered from the batteries.

Division I, II, and III DC electrical power subsystems provides the control power for its associated Class 1E AC power system. Each of these three DC electrical power subsystems provides both motive and control power, as necessary, to associated safety related components (Division IV supplies neither motive nor control power). All four DC electrical power subsystems provide DC electrical power to essential instrumentation and logic within their respective divisions as well as to the inverters, which in turn power the AC vital buses. All four subsystems also provide motive and control power for DC emergency lighting systems.

The DC power distribution system is described in more detail in Bases for LCO 3.8.9, “Distribution Systems – Operating,” and LCO 3.8.10, “Distribution Systems – Shutdown.”

Each battery for Division I, II, III, and IV has adequate storage capacity to carry the required load continuously for at least 2 hours. The battery for Division I, which controls the RCIC system, also has adequate storage capacity for approximately eight hours of operation during station blackout (Ref. 12).

BASES

BACKGROUND (continued)

Each DC subsystem battery is separately housed in a ventilated room apart from its charger and distribution centers. Each subsystem is located in an area separated physically and electrically from the other subsystems to ensure that a single failure in one subsystem does not cause a failure in a redundant subsystem. There is no sharing between redundant Class 1E DC subsystems such as batteries, battery chargers, or distribution panels.

The maximum equalizing charge for Class 1E batteries is 140 V. The DC system minimum discharge voltage at the end of the discharge period is 1.75 V per cell (105 V for the battery). The operating voltage range of the Class 1E DC subsystem loads is 100 to 140 V.

Each of the four battery chargers for Division I, II, III, and IV DC electrical power subsystems has ample power output capacity for the steady state operation of its Division's connected loads required during normal operation, while at the same time maintaining its battery bank fully charged. Each battery charger has sufficient capacity to restore its battery bank from the design minimum charge to within 95% of its fully charged state within 12 hours while supplying the largest combined demand of the various continuous steady state loads (Ref. 4).

APPLICABLE SAFETY ANALYSES

The initial conditions of Design Basis Accident (DBA) and transient analyses in DCD Tier 2, Chapter 6 (Ref. 5) and Chapter 15 (Ref. 6), assume that ESF systems are OPERABLE. The DC electrical power system provides DC electrical power for ESF systems, ESF support systems including the DGs and its support systems, and control and switching during all MODES of operation.

The OPERABILITY of the DC subsystems is consistent with the initial assumptions of the accident analyses and is based upon meeting the design basis of the unit. This includes maintaining DC sources OPERABLE during accident conditions in the event of:

a. An assumed loss of all offsite AC power or of all onsite AC power; and

b. A worst case single failure.

The DC sources satisfy Criterion 3 of the NRC Policy Statement.

BASES

LCO

The four DC electrical power subsystems are required to be OPERABLE to ensure the availability of the required power to shut down the reactor and maintain it in a safe condition after an anticipated operational occurrence (AOO) or a postulated DBA. Loss of any DC electrical power subsystem does not prevent the minimum safety function from being performed (Ref. 4). Each subsystem (or Division) consists of one battery, one battery charger, and the corresponding control equipment and interconnecting cabling within the subsystem.

APPLICABILITY

The DC electrical power sources are required to be OPERABLE in MODES 1, 2, and 3 to ensure safe unit operation and to ensure that:

a. Acceptable fuel design limits and reactor coolant pressure boundary limits are not exceeded as a result of AOOs or abnormal transients; and

b. Adequate core cooling is provided, and containment integrity and other vital functions are maintained in the event of a postulated DBA.

The DC electrical power requirements for MODES 4 and 5 are addressed in the Bases for LCO 3.8.5, “DC Sources – Shutdown.”

ACTIONS

A.1, A.2, A.3, A.4, and A.5

Condition A represents one of the Division I, II, or III DC electrical power subsystems with a loss of ability to completely respond to an event, and a potential loss of ability to remain energized during normal operation. It is, therefore, imperative that the operator’s attention focus on stabilizing the unit, minimizing the potential for complete loss of DC power to the affected division.

If Condition A is entered, Required Action A.5 allows 72 hours to restore the inoperable DC electrical power subsystem to OPERABLE status, provided the combustion turbine generator (CTG) is verified functional through testing within 12 hours and its capability of being aligned to the two unaffected ESF buses is verified, initially within 12 hours, and once per 8 hours thereafter. One AC electrical division and its loads are affected by loss of a DC electrical power subsystem because the DC electrical power subsystem provides control functions to its associated divisional DG, AC distribution circuit breakers, and other AC loads. Because a DG, its associated AC distribution system, and RCIC(Div. I) are impacted by the loss of the DC electrical power subsystem, the functional capability of the CTG is verified in this Condition to be capable of being aligned to the unaffected ESF buses to provide a backup power

BASES

ACTIONS (continued)

A.1, A.2, A.3, A.4, and A.5 (continued)

source during a loss of all AC power event. The Completion Time of 12 hours for Required Action A.3 is based on a consideration of the capability of the remaining operable DC electrical divisions and on the PRA sensitivity studies (Ref. 13).

If one of the required Division I, II, or III DC electrical power subsystems is inoperable (e.g., inoperable battery, inoperable battery charger, or inoperable battery charger and associated inoperable battery), the remaining DC electrical power subsystems have the capacity to support a safe shutdown and to mitigate an accident condition. Since a subsequent worst case single failure could, however, result in the loss of minimum necessary DC electrical subsystems, continued power operation should not exceed 72 hours. The 72 hour Completion Time reflects a reasonable time to assess unit status as a function of the inoperable DC electrical power subsystem and, if the DC electrical power subsystem is not restored to OPERABLE status, to prepare to effect an orderly and safe unit shutdown. The 72 hour limit is consistent with the allowed time for one DC distribution subsystem (either Division I, II, o r III) being inoperable. The Completion Time of 72 hours for Required Action A.5 is based on a consideration of the capability of the remaining operable DC electrical divisions and on the PRA sensitivity studies (Ref. 13).

Completion of Required Action A.1 within 2 hours provides further assurance that operation in Condition A for 72 hours is acceptable by determining that no common cause failure exist among the OPERABLE DC electrical power subsystems. Because of its potential safety significance, only 2 hours are allowed to verify that no common cause failure exists.

Required Action A.2 is specified so that appropriate actions are implemented in accordance with the affected required features of the LCOs' ACTIONS.

B.1 and B.2

In Condition B, Division IV DC electrical power subsystem is inoperable. Required Actions B.1 allows 2 hours to declare affected required features inoperable so that appropriate actions are implemented in accordance with the affected required features of the LCOs' ACTIONS. Division IV is less critical than the other three DC electrical power subsystems because of its limited role in actuating safety related functions(i.e., Data Communication Function Div. IV, SSLC Div. IV sensor logic). Division IV does not feed or control any major mechanical components or systems.

BASES

ACTIONS (continued)

B.1 and B.2 (continued)

Therefore, its loss is not as critical as a loss of one of the other divisions, and the less restrictive ACTIONS of other LCOs are appropriate (i.e., LCO 3.3.1.1, LCO 3.3.3.1).

Completion of Required Action B.1 within 2 hours provides further assurance that operation in Condition B for the less restrictive ACTIONS of other LCOs is acceptable by determining that no common cause failure exists among the OPERABLE DC electrical power subsystems. Because of its potential safety significance, only 2 hours are allowed to verify that no common cause failure exists.

C.1 and C.2

In Condition C, Division IV and one other DC electrical power subsystem are inoperable. Because this condition is more severe than that of Condition A or B, only 2 hours are allowed to restore one of the inoperable subsystems to OPERABLE status. This 2 hour Completion Time reflects a reasonable time to assess unit status as a function of the two inoperable DC electrical power subsystems and, if one of the DC electrical power subsystems is not restored to OPERABLE status, to prepare to effect an orderly and safe unit shutdown.

D.1 and D.2

If all inoperable DC electrical power subsystems cannot be restored to OPERABLE status within the associated Completion Times the unit must be brought to a MODE in which the LCO does not apply. To achieve this status, the plant must be brought to at least MODE 3 within 12 hours and to MODE 4 within 36 hours. The allowed Completion Times are reasonable, based on operating experience, to reach the required plant conditions from full power conditions in an orderly manner and without challenging plant systems. The Completion Time to bring the unit to MODE 4 is consistent with the time required in Regulatory Guide 1.93 (Ref. 7).

SURVEILLANCE REQUIREMENTS

SR 3.8.4.1

Verifying battery terminal voltage while on float charge helps to ensure the effectiveness of the charging system and the ability of the batteries to perform their intended function. Float charge is the condition in which the charger is supplying the continuous charge required to overcome the

BASES

SURVEILLANCE REQUIREMENTS (continued)

SR 3.8.4.1 (continued)

internal losses of a battery (or battery cell) and maintain the battery (or battery cell) in a fully charged state. The voltage requirements are based on the nominal design voltage of the battery and are consistent with the initial voltages assumed in the battery sizing calculations. The 7 day Frequency is consistent with manufacturer's recommendations and IEEE-450 (Ref. 8).

Visual inspection to detect corrosion of the battery cells and connections, or measurement of the resistance of each inter-cell, inter-rack, inter-tier, and terminal connection, provides an indication of physical damage or abnormal deterioration that could potentially degrade battery performance.

The limits established for this SR must be no more than 20% above the resistance as measured during installation, or not above the ceiling value established by the manufacturer.

The Surveillance Frequency for these inspections, which can detect conditions that can cause power losses due to resistance heating, is 92 days. This Frequency is considered acceptable based on operating experience related to detecting corrosion trends.

SR 3.8.4.3

Visual inspection of the battery cells, cell plates, and battery racks provides an indication of physical damage or abnormal deterioration that could potentially degrade battery performance.

The 12 month Frequency of these SRs is consistent with IEEE-450 (Ref. 8), which recommends detailed visual inspection of cell condition and inspection of cell to cell and terminal connection resistance on a yearly basis.

SR 3.8.4.4 and SR 3.8.4.5

Visual inspection and resistance measurements of inter-cell, inter-rack, inter-tier, and terminal connections provides an indication of physical damage or abnormal deterioration that could indicate degraded battery condition. The anti-corrosion material is used to ensure good electrical connections and to reduce terminal deterioration. The visual inspection for corrosion is not intended to require removal of and inspection under each terminal connection.

BASES

SURVEILLANCE REQUIREMENTS (continued)

SR 3.8.4.4 and SR 3.8.4.5 (continued)

The removal of visible corrosion is a preventive maintenance SR. The presence of visible corrosion does not necessarily represent a failure of this SR, provided visible corrosion is removed during performance of this Surveillance.

The connection resistance limits for this SR must be no more than 20% above the resistance as measured during installation, or not above the ceiling value established by battery sizing.

The 12 month Frequency of these SRs is consistent with IEEE-450 (Ref. 8), which recommends detailed visual inspection of cell condition and inspection of cell to cell and terminal connection resistance on a yearly basis.

SR 3.8.4.6

Battery charger capability requirements are based on the design capacity of the chargers (Ref. 4). According to Regulatory Guide 1.32 (Ref. 9), the battery charger supply is required to be based on the largest combined demands of the various steady state loads and the charging capacity to restore the battery from the design minimum charge state to the fully charged state, irrespective of the status of the unit during these demand occurrences. The minimum required amperes and duration ensure that these requirements can be satisfied.

The Surveillance Frequency is acceptable, given the unit conditions required to perform the test and the other administrative controls existing to ensure adequate charger performance during these 18 month intervals. In addition, this Frequency is intended to be consistent with expected fuel cycle lengths.

This SR is modified by two Notes. The reason for Note 1 is that performing the Surveillance would remove a required DC electrical power subsystem from service, perturb the electrical distribution system, and challenge safety systems. Note 2 is added to this SR to acknowledge that credit may be taken for unplanned events that satisfy the Surveillance.

SR 3.8.4.7

A battery service test is a special test of the battery's capability, as found, to satisfy the design requirements (battery duty cycle) of the DC electrical

BASES

SURVEILLANCE REQUIREMENTS (continued)

SR 3.8.4.7 (continued)

power system. The discharge rate and test length correspond to the design duty cycle requirements as specified in Reference 4.

The Surveillance Frequency of 18 months is consistent with the recommendations of Regulatory Guide 1.32 (Ref. 9) and Regulatory Guide 1.129 (Ref. 10), which state that the battery service test should be performed during refueling operations or at some other outage, with intervals between tests not to exceed 18 months.

This SR is modified by three Notes. Note 1 allows the performance of a modified performance discharge test every 60 months in lieu of a service test.

The modified performance discharge test is a simulated duty cycle consisting of just two rates; the one minute rate published for the battery or the largest current load of the duty cycle, both of which envelope the duty cycle of the service test. Since the ampere-hours removed by a rated one minute discharge represents a very small portion of the battery's capacity, the test rate can be changed to that for the performance test without compromising the results of the performance discharge test. The battery terminal voltage for the modified performance discharge test should remain above the minimum battery terminal voltage specified in the battery service test for the duration of time equal to that of the service test.

A modified discharge test is a test of the battery capacity and its ability to provide a high rate, short duration load (usually the highest rate of the duty cycle). This will often confirm the battery's ability to meet the critical period of the load duty cycle, in addition to determining its percentage of rated capacity. Initial conditions for the modified performance discharge test should be identical to those specified for a service test.

The reason for Note 2 is that performing the Surveillance would remove a required DC electrical power subsystem from service, perturb the electrical distribution system, and challenge safety systems. Note 3 is added to this SR to acknowledge that credit may be taken for unplanned events that satisfy the Surveillance.

SR 3.8.4.8

A battery performance discharge test is a test of constant current capacity of a battery, normally done in the as found condition, after having been in service, to detect any change in the capacity determined by the

BASES

SURVEILLANCE REQUIREMENTS (continued)

SR 3.8.4.8 (continued)

acceptance test. The test is intended to determine overall battery degradation due to age and usage.

The acceptance criteria for this Surveillance is consistent with IEEE-450 (Ref. 8) and IEEE-485 (Ref. 11). These references recommend that the battery be replaced if its capacity is below 80% of the manufacturer's rating. A capacity of 80% shows that the battery rate of deterioration is increasing, even if there is ample capacity to meet the load requirements.

A battery modified performance discharge test is described in the bases for SR 3.8.4.7. Either the battery performance discharge test or the modified performance discharge test is acceptable for satisfying SR 3.8.4.8; however, only the modified performance discharge test may be used to satisfy SR 3.8.4.8 while satisfying the requirements of SR 3.8.4.7 at the same time.

The Surveillance Frequency for this test is 60 months, or every 12 months if the battery shows degradation or has reached 85% of its expected life. Degradation is indicated, according to IEEE-450 (Ref. 8), when the battery capacity drops by more than 10% relative to its capacity on the previous performance test or when it is ≥ 10% below the manufacturer's rating. All these Frequencies are consistent with the recommendations in IEEE-450 (Ref. 8).

This SR is modified by two Notes. The reason for Note 1 is that performing the Surveillance would remove a required DC electrical power subsystem from service, perturb the electrical distribution system, and challenge safety systems. Note 2 is added to this SR to acknowledge that credit may be taken for unplanned events that satisfy the Surveillance.

REFERENCES

1. 10 CFR 50, Appendix A, GDC 17.
2. Regulatory Guide 1.6, March 10, 1971.
3. IEEE Standard 308, 1978.
4. DCD Tier 2, Section 8.3.2.
5. DCD Tier 2, Chapter 6.
6. DCD Tier 2, Chapter 15.

BASES

REFERENCES (continued)

7. Regulatory Guide 1.93, December 1974.

8. IEEE Standard 450, 1987.

9. Regulatory Guide 1.32, February 1977.

10. Regulatory Guide 1.129, December 1974.

11. IEEE Standard 485, 1983.

12. DCD Tier 2, Section 19E.2.1.2.2.

13. Letter, Jack Fox to Chet Poslusny, “Submittal Supporting Accelerated ABWR Review Schedule-ABWR CDF Sensitivity to ESF Equipment Out of Service”, Docket No. STN 52-001, July 27, 1993.

B 3.8 ELECTRICAL POWER SYSTEMS

B 3.8.5 DC Sources – Shutdown

BASES

BACKGROUND	A description of the DC sources is provided in the Bases for LCO 3.8.4, "DC Sources – Operating."
APPLICABLE SAFETY ANALYSES	The initial conditions of Design Basis Accident and transient analyses in DCD Tier 2, Chapter 6 (Ref. 1) and Chapter 15 (Ref. 2), assume that Engineered Safety Feature systems are OPERABLE. The DC electrical power system provides DC electrical power for ESF systems, ESF support systems including the DGs and its support systems, and control and switching during all MODES of operation. The OPERABILITY of the DC subsystems is consistent with the initial assumptions of the accident analyses and the requirements for the supported systems' OPERABILITY. The OPERABILITY of the minimum DC electrical power sources during MODES 4 and 5 ensures that: a. The facility can be maintained in the shutdown or refueling condition for extended periods; b. Sufficient instrumentation and control capability is available for monitoring and maintaining the unit status; and c. Adequate DC electrical power is provided to mitigate events postulated during shutdown, such as an inadvertent draindown of the vessel or a fuel handling accident. The DC sources satisfy Criterion 3 of the NRC Policy Statement.
LCO	The number of DC electrical power subsystems (each consisting of a battery, one battery charger, and the corresponding control equipment and interconnecting cabling within the division) required to be OPERABLE is the number necessary to support the electrical power subsystems required to be OPERABLE by LCO 3.8.10, "Distribution Systems – Operating." This ensures the availability of sufficient DC electrical power sources to operate the unit in a safe manner and to mitigate the consequences of postulated events during shutdown (e.g., fuel handling accidents and inadvertent reactor vessel draindown).

BASES

APPLICABILITY

The DC electrical power sources required to be OPERABLE in MODES 4 and 5 and during movement of irradiated fuel assemblies in the secondary containment provide assurance that:

a. Required features to provide adequate coolant inventory makeup are available for the irradiated fuel assemblies in the core in case of an inadvertent drain down of the reactor vessel;

b. Required features needed to mitigate a fuel handling accident are available;

c. Required features necessary to mitigate the effects of events that can lead to core damage during shutdown are available; and

d. Instrumentation and control capability is available for monitoring and maintaining the unit in a cold shutdown condition or refueling condition.

The DC electrical power requirements for MODES 1, 2, and 3 are covered in LCO 3.8.4.

ACTIONS

A.1, A.2.1, A.2.2, A.2.3, and A.2.4

Because more than one DC distribution subsystem is required to be OPERABLE according to LCO 3.8.10, the DC subsystems remaining OPERABLE with one or more DC power sources inoperable may be capable of supporting sufficient required features to allow continuation of CORE ALTERATIONS, fuel movement, and operations with a potential for draining the reactor vessel. By allowing the option to declare required features inoperable with associated DC power source(s) inoperable, appropriate restrictions are implemented in accordance with the affected system LCOs' ACTIONS. In many instances this option may involve undesirable administrative efforts. Therefore, the allowance for sufficiently conservative actions is made (i.e., to suspend CORE ALTERATIONS, movement of irradiated fuel assemblies, and any activities that could result in inadvertent draining of the reactor vessel). Note: if the option of Required Action A.1 is chosen, it is understood that the ACTIONS also require immediately initiating action to restore the required DC electrical power subsystems to OPERABLE status and to continue this action until restoration is accomplished in order to provide the necessary DC electrical power to the plant safety systems.

Suspension of these activities shall not preclude completion of actions to establish a safe conservative condition. These actions minimize the probability of the occurrence of postulated events. It is further required to

BASES

ACTIONS (continued)

A.1, A.2.1, A.2.2, A.2.3, and A.2.4 (continued)

immediately initiate action to restore the required DC electrical power subsystems to OPERABLE status and to continue this action until restoration is accomplished in order to provide the necessary DC electrical power to the plant safety systems.

Notwithstanding performance of the above conservative Required Actions, the unit is still without sufficient DC power sources to operate in a safe manner. Therefore, action must be initiated to restore the minimum required DC power sources and continue until the LCO requirements are met.

The Completion Time of immediately is consistent with the required times for actions requiring prompt attention. The restoration of the required DC electrical power subsystems should be completed as quickly as possible in order to minimize the time during which the plant safety systems may be without sufficient power.

SURVEILLANCE REQUIREMENTS

SR 3.8.5.1

Since more than one DC electrical power subsystem is required to be OPERABLE, SR 3.8.5.1 requires performance of all Surveillances required by SR 3.8.4.1 through SR 3.8.4.8. Therefore, see the corresponding Bases for LCO 3.8.4 for a discussion of each SR.

REFERENCES

1. DCD Tier 2, Chapter 6.

2. DCD Tier 2, Chapter 15.

B 3.8 ELECTRICAL POWER SYSTEMS

B 3.8.6 Battery Cell Parameters

BASES

BACKGROUND	This LCO delineates the limits on electrolyte temperature, level, float voltage, and specific gravity for the DC power source batteries. A discussion of these batteries and their OPERABILITY requirements is provided in the Bases for LCO 3.8.4, “DC Sources – Operating,” and LCO 3.8.5, “DC Sources – Shutdown.”
APPLICABLE SAFETY ANALYSES	The initial conditions of Design Basis Accident (DBA) and transient analyses in DCD Tier 2, Chapter 6 (Ref. 1) and Chapter 15 (Ref. 2), assume Engineered Safety Feature systems are OPERABLE. The DC electrical power system provides DC electrical power for ESF systems, ESF support systems including the DGs and its support systems, and control and switching during all MODES of operation. The OPERABILITY of the DC subsystems is consistent with the initial assumptions of the accident analyses and is based upon meeting the design basis of the unit. This includes maintaining DC sources OPERABLE during accident conditions, in the event of: a. An assumed loss of all offsite AC power or all onsite AC power; and b. A worst case single failure. Since battery cell parameters support the operation of the DC power sources, they satisfy Criterion 3 of the NRC Policy Statement.
LCO	Battery cell parameters must remain within acceptable limits to ensure availability of the required DC power to shut down the reactor and maintain it in a safe condition after an anticipated operational occurrence or a postulated DBA. Electrolyte limits are conservatively established, allowing continued DC electrical system function even with limits not met.
APPLICABILITY	The battery cell parameters are required solely for the support of the associated DC electrical power subsystem. Therefore, battery electrolyte is only required to be within limits when the DC power source is required to be OPERABLE. Refer to the Applicability discussions in Bases for LCO 3.8.4 and LCO 3.8.5.

BASES

ACTIONS

A.1, A.2, and A.3

With parameters of one or more cells in one or more batteries not within limits (i.e., Category A limits not met, Category B limits not met, or Category A and B limits not met) but within the limit (Category C limits are met) specified in Table 3.8.6-1, operation is permitted for a limited period since sufficient capacity exists to perform the intended function.

The pilot cell electrolyte level and float voltage are required to be verified to meet Category C limits within 1 hour (Required Action A.1). This check provides a quick indication of the status of the remainder of the battery cells. One hour provides time to inspect the electrolyte level and to confirm the float voltage of the pilot cell. One hour is considered a reasonable amount of time to perform the required verification.

Verification that the Category C limits are met (Required Action A.2) provides assurance that, during the time needed to restore the parameters to the Category A and B limits, the battery is still capable of performing its intended function. A period of 24 hours is allowed to complete the required verification because specific gravity measurements must be obtained for each connected cell. Taking into consideration both the time required to perform the required verification and the assurance that the battery cell parameters are not severely degraded, this time is considered reasonable.

Continued operation is only permitted for 31 days before battery cell parameters must be restored to within Category A and B limits. Taking into consideration that while battery capacity is degraded, sufficient capacity exists to perform the intended function and to allow time to fully restore the battery cell parameters to normal limits, this time is acceptable for operation prior to declaring the DC batteries inoperable.

B.1

When any battery parameter is outside the Category C limit for any connected cell, sufficient capacity to supply the maximum expected load requirement is not assured and the corresponding DC electrical power subsystem must be declared inoperable. Additionally, other potentially extreme conditions, such as not completing the Required Actions of Condition A within the required Completion Time or average electrolyte temperature of representative cells falling below 10°C, also are cause for immediately declaring the associated DC electrical power subsystem inoperable.

BASES

SURVEILLANCE REQUIREMENTS

SR 3.8.6.1

The SR verifies that Category A battery cell parameters are consistent with IEEE-450 (Ref. 3), which recommends regular battery inspections (at least one per month) including voltage, specific gravity, and electrolyte temperature of pilot cells.

SR 3.8.6.2

The quarterly inspection of specific gravity and voltage is consistent with IEEE-450 (Ref. 3). In addition, within 24 hours of a battery discharge < 110 V or a battery overcharge > 150 V, the battery must be demonstrated to meet Category B limits. This inspection is also consistent with IEEE-450 (Ref. 3), which recommends special inspections following a severe discharge or overcharge, to ensure that no significant degradation of the battery has occurred as a consequence of such discharge or overcharge.

SR 3.8.6.3

This Surveillance verification that the average temperature of representative cells is ≥ 10°C is consistent with a recommendation of IEEE-450 (Ref. 3), which states that the temperature of electrolyte in representative cells should be determined on a quarterly basis.

Lower than normal temperatures act to inhibit or reduce battery capacity. This SR ensures that the operating temperatures remain within an acceptable operating range. This limit is based on parameters used for battery sizing.

Table 3.8.6-1

This table delineates the limits on electrolyte level, float voltage, and specific gravity for three different categories. The meaning of each category is discussed below.

Category A defines the normal parameter limit for each designated pilot cell in each battery. The cells selected as pilot cells are those whose temperature, voltage, and electrolyte specific gravity approximate the state of charge of the entire battery.

BASES

SURVEILLANCE REQUIREMENTS (continued)

Table 3.8.6-1 (continued)

The Category A limits specified for electrolyte level are based on guidance in IEEE-450 (Ref. 3), with the extra 6 mm allowance above the high water level indication for operating margin to account for temperatures and charge effects. In addition to this allowance, footnote a to Table 3.8.6-1 permits the electrolyte level to be above the specified maximum level during equalizing charge, provided it is not overflowing. These limits ensure that the plates suffer no physical damage, and that adequate electron transfer capability is maintained in the event of transient conditions. IEEE-450 (Ref. 3) recommends that electrolyte level readings should be made only after the battery has been at float charge for at least 72 hours.

The Category A limit specified for float voltage is ≥ 2.13 V per cell. This value is based on the recommendation of IEEE-450 (Ref. 3), which states that prolonged operation of cells below 2.13 V can reduce the life expectancy of cells.

The Category A limit specified for specific gravity for each pilot cell is ≥ 1.195 (0.015 below the manufacturer's fully charged nominal specific gravity or a battery charging current that had stabilized at a low value). This value is characteristic of a charged cell with adequate capacity. According to IEEE-450 (Ref. 3), the specific gravity readings are based on a temperature of 25°C.

The specific gravity readings are corrected for actual electrolyte temperature and level. For each 1.67°C above 25°C, 1 point (0.001) is added to the reading; 1 point is subtracted for each 1.67°C below 25°C. The specific gravity of the electrolyte in a cell increases with a loss of water due to electrolysis or evaporation. Level correction will be in accordance with manufacturer's recommendations. Footnote b in Table 3.8.6-1 requires the above mentioned correction for electrolyte level and temperature.

Because of specific gravity gradients that are produced within cells during the recharging process, delays of several days may occur while waiting for the specific gravity to stabilize. A stabilized charger current is an acceptable alternative to specific gravity measurement for determining the state of charge of the battery. This phenomenon is discussed in IEEE-450 (Ref. 3). Footnote c to Table 3.8.6-1 allows the float charge current to be used as an alternate to specific gravity for up to 7 days following a battery recharge.

Category B defines the normal parameter limits for each connected cell. The term "connected cell" excludes any battery cell that may be jumpered out.

BASES

SURVEILLANCE REQUIREMENTS (continued)

Table 3.8.6-1 (continued)

The Category B limits specified for electrolyte level and float voltage are the same as those specified for Category A and have been discussed above. The Category B limit specified for specific gravity for each connected cell is ≥ 1.190 (0.020 below the manufacturer's fully charged, nominal specific gravity) with the average of all connected cells > 1.200 (0.010 below the manufacturer's fully charged, nominal specific gravity). These are based on manufacturer's recommendations. The minimum specific gravity value required for each cell ensures that the effects of a highly charged or newly installed cell do not mask overall degradation of the battery. Footnote b to Table 3.8.6-1 requires correction of specific gravity for electrolyte temperature and level.

Category C defines the limits for each connected cell. These values, although reduced, provide assurance that sufficient capacity exists to perform the intended function and maintain a margin of safety. When any battery parameter is outside the Category C limit, the assurance of sufficient capacity described above no longer exists, and the battery must be declared inoperable.

The Category C limit specified for electrolyte level (above the top of the plates and not overflowing) ensure that the plates suffer no physical damage and maintain adequate electron transfer capability. The Category C limit for float voltage is based on IEEE-450 (Ref. 3), which states that a cell voltage of 2.07 V or below, under float conditions and not caused by elevated temperature of the cell, indicates internal cell problems and may require cell replacement.

The Category C limit for average specific gravity (≥ 1.190), is based on manufacturer's recommendations (0.020 below the manufacturer's recommended fully charged, nominal specific gravity). In addition to that limit, it is required that the specific gravity for each connected cell must be no less than 0.020 below the average of all connected cells. This limit ensures that the effect of a highly charged or new cell does not mask overall degradation of the battery. The footnotes to Table 3.8.6-1 that apply to specific gravity are applicable to Category A, B, and C specific gravity.

REFERENCES

1. DCD Tier 2, Chapter 6.

2. DCD Tier 2, Chapter 15.

3. IEEE Standard 450, 1987.

B 3.8 ELECTRICAL POWER SYSTEMS

B 3.8.7 Inverters – Operating

BASES

BACKGROUND

The inverters are the preferred source of power to the four AC vital buses. The inverter for each division is normally supplied power from the divisional 480 V AC motor control center (MCC) via an AC to DC rectifier. Because there are only three divisions of 480 V AC divisional power, the Division IV inverter is powered by the Division II 480 V AC MCC via an AC to DC rectifier. Each of the four divisions has access to its own Class 1E 125 V battery that provides a backup source of 125 V DC power through a transfer switch. The transfer switch automatically switches power from the AC to DC rectified normal power supply to the 125 V DC backup power supply when AC power failure is sensed (Ref. 1). The inverter converts DC electrical power to AC electrical power. The transfer switch and inverter thus provide an uninterruptible AC power supply for Class 1E loads.

APPLICABLE SAFETY ANALYSES

The initial conditions of Design Basis Accident (DBA) and transient analyses in DCD Tier 2, Chapter 6 (Ref. 2) and Chapter 15 (Ref. 3), assume Engineered Safety Feature systems are OPERABLE. The inverters are designed to provide the required capacity, capability, redundancy, and reliability to ensure the availability of necessary power to Class 1E CVCF loads so that the fuel, Reactor Coolant System, and containment design limits are not exceeded. These limits are discussed in more detail in the Bases for Section 3.2, Power Distribution Limits; Section 3.4, Reactor Coolant System (RCS); and Section 3.6, Containment Systems.

The OPERABILITY of the inverters is consistent with the initial assumptions of the accident analyses and is based on meeting the design basis of the unit. This includes maintaining electrical power sources OPERABLE during accident conditions in the event of:

a. An assumed loss of all offsite AC or all onsite AC electrical power; and

b. A worst case single failure.

Inverters are a part of the distribution system and, as such, satisfy Criterion 3 of the NRC Policy Statement.

BASES

LCO

The inverters ensure the availability of AC electrical power for the Class 1E CVCF loads required to shut down the reactor and maintain it in a safe condition after an anticipated operational occurrence (AOO) or a postulated DBA.

Maintaining the required inverter(s) OPERABLE ensures that the redundancy incorporated into the design of the RPS, MSIV logic and controls, NMS, and PRM, is maintained. Each of the four inverters has a 125 V battery backup power source to ensure an uninterruptible supply of AC electrical power to the AC vital buses even if the 4.16 kV and 480 V safety buses are de-energized.

OPERABLE inverters require that the AC vital bus be powered by the inverter via an inverted DC voltage. This assumes correct DC voltages are applied from the AC to DC rectified and 125 V DC power supplies, a correct AC voltage is at the output, and these voltages are within the design voltage and frequency tolerances. If the vital AC bus is powered from the AC power supply through the 480 V/120 V bypass transformer, or power is available to the inverter from only its AC source, then the inverter is considered inoperable.

APPLICABILITY

The inverters are required to be OPERABLE in MODES 1, 2, and 3 to ensure that:

a. Acceptable fuel design limits and reactor coolant pressure boundary limits are not exceeded as a result of AOOs or abnormal transients; and

b. Adequate core cooling is provided, and containment OPERABILITY and other vital functions are maintained in the event of a postulated DBA.

Inverter requirements for MODES 4 and 5 are covered in the Bases for LCO 3.8.8, “Inverters – Shutdown.”

ACTIONS

A.1 and A.2

Even with a required inverter inoperable, the corresponding AC vital bus may not be inoperable. This would be the case if the AC vital bus is energized via its Class 1E 480 V/120 V bypass transformer. If the inoperability of an inverter were to make an AC vital bus inoperable, the condition present would be more severe and would need to refer to another LCO for appropriate action. Therefore, the Required Actions of Conditions A are modified by a Note stating that ACTIONS for LCO 3.8.9

BASES

ACTIONS (continued)

A.1 and A.2 (continued)

must be entered immediately in the event an AC vital bus is de-energized; i.e., inoperable. This ensures the vital bus is returned to OPERABLE status within 72 hours (or appropriate other ACTIONS are followed if an inverter and AC vital bus are inoperable).

Required Action A.1 allows 7 days to fix the inoperable inverter and return it to service. The 7-day limit is based upon a consideration of the loads a particular inverter serves and the Completion Times allowed in supported system LCOs. When the AC vital bus is powered from the AC power supply through its 480 V/120 V bypass transformer, it is relying upon interruptible AC electrical power sources (offsite and onsite). The uninterruptible, battery backed, inverter source to the AC vital buses is the preferred source for powering instrumentation devices. Action A.2 is specified so that appropriate restrictions are implemented in accordance with the affected required feature(s) of the LCOs' ACTIONS.

B.1 and B.2

Even with two inverters inoperable, the corresponding AC vital buses may not be inoperable. This would be the case if the AC vital buses are energized via their Class 1E 480 V/120 V bypass transformers. If the inoperability of an inverter were to make an AC vital bus inoperable, the condition present would be more severe and would need to refer to another LCO for appropriate action. Therefore, the Required Actions of Condition B are modified by a Note stating that ACTIONS for LCO 3.8.9 must be entered immediately in the event an AC vital bus is de-energized; i.e., inoperable. This ensures the vital bus is returned to OPERABLE status within 72 hours (or appropriate other ACTIONS are followed if the inverters and AC vital buses are inoperable).

In Condition B, the Division IV inverter and one other inverter are inoperable. Because this condition is more severe than that of Condition A, only 2 hours are allowed to restore one of the inoperable inverters to OPERABLE status. This 2 hour Completion Time reflects a reasonable time to assess unit status as a function of the two inoperable inverters and, if one of the inverters is not restored to OPERABLE status, to prepare to effect an orderly and safe unit shutdown.

BASES

ACTIONS (continued)

C.1 and C.2

If the inoperable devices or components cannot be restored to OPERABLE status within the associated Completion Time, the plant must be brought to a MODE in which the LCO does not apply. To achieve this status, the plant must be brought to at least MODE 3 within 12 hours and to MODE 4 within 36 hours. The allowed Completion Times are reasonable, based on operating experience, to reach the required plant conditions from full power conditions in an orderly manner and without challenging plant systems.

SURVEILLANCE REQUIREMENTS

SR 3.8.7.1

This Surveillance verifies that the inverters are functioning properly with all required circuit breakers closed and AC vital buses energized from the inverter. The verification of proper voltage and frequency output ensures that the required power is readily available for the instrumentation connected to the AC vital buses. The 7 day Frequency takes into account the redundant capability of the inverters and other indications available in the control room that alert the operator to inverter malfunctions.

REFERENCES

1. DCD Tier 2, Chapter 8.
2. DCD Tier 2, Chapter 6.
3. DCD Tier 2, Chapter 15.

B 3.8 ELECTRICAL POWER SYSTEMS

B 3.8.8 Inverters – Shutdown

BASES

BACKGROUND

A description of the inverters is provided in the Bases for LCO 3.8.7, “Inverters – Operating.”

APPLICABLE SAFETY ANALYSES

The initial conditions of Design Basis Accident (DBA) and transient accident analyses in DCD Tier 2, Chapter 6 (Ref. 1) and Chapter 15 (Ref. 2), assume Engineered Safety Feature systems are OPERABLE. The inverters are designed to provide the required capacity, capability, redundancy, and reliability to ensure the availability of necessary power to the Class 1E CVCF loads so that the fuel, Reactor Coolant System, and containment design limits are not exceeded.

The OPERABILITY of the inverters is consistent with the initial assumptions of the accident analyses and the requirements for the supported systems’ OPERABILITY.

The OPERABILITY of the minimum inverters to each AC vital bus during MODES 4 and 5 ensures that:

a. The facility can be maintained in the shutdown or refueling condition for extended periods;

b. Sufficient instrumentation and control capability are available for monitoring and maintaining the unit status; and

c. Adequate power is available to mitigate events postulated during shutdown, such as an inadvertent draindown of the vessel or a fuel handling accident.

The inverters were previously identified as part of the Distribution System and, as such, satisfy Criterion 3 of the NRC Policy Statement.

LCO

The inverters ensure the availability of AC electrical power for the Class 1E CVCF loads required to shut down the reactor and maintain it in a safe condition after an anticipated operational occurrence or postulated DBA.

Maintaining the required inverter(s) OPERABLE ensures the availability of sufficient inverter power sources to operate the plant in a safe manner and to mitigate the consequences of postulated events during shutdown

BASES

LCO (continued)

(e.g., fuel handling accidents and inadvertent reactor vessel drain down). Each inverter has a 125 V battery backup power source to ensure an uninterruptible supply of AC electrical power to the AC vital buses even if the 4.16 kV safety buses are de-energized.

OPERABLE inverters require the AC vital bus be powered by the inverter through inverted DC voltage. This assumes correct DC voltages are applied from the AC to DC rectified and 125 V DC power supplies, a correct AC voltage is at the output, and these voltages are within the design voltage and frequency tolerances. If the vital AC bus is powered from the AC power supply through the 480 V/120 V bypass transformer or power is available to the inverter from only its AC source, then the inverter is considered inoperable.

APPLICABILITY

The inverters required to be OPERABLE in MODES 4 and 5 and also any time during movement of irradiated fuel assemblies in the secondary containment provide assurance that:

a. Systems to provide adequate coolant inventory makeup are available for the irradiated fuel in the core in case of an inadvertent drain down of the reactor vessel;

b. Systems needed to mitigate a fuel handling accident are available;

c. Systems necessary to mitigate the effects of events that can lead to core damage during shutdown are available; and

d. Instrumentation and control capability is available for monitoring and maintaining the unit in a cold shutdown condition or refueling condition.

Inverter requirements for MODES 1, 2, and 3 are covered in LCO 3.8.7.

ACTIONS

A.1, A.2.1, A.2.2, A.2.3, and A.2.4

If two divisions are required by LCO 3.8.10, “Distribution Systems – Shutdown,” the remaining OPERABLE inverters may be capable of supporting sufficient required feature(s) to allow continuation of CORE ALTERATIONS, fuel movement, and operations with a potential for draining the reactor vessel. By the allowance of the option to declare required feature(s) inoperable with the associated inverter(s) inoperable, appropriate restrictions are implemented in accordance with the affected required feature(s) of the LCOs’ ACTIONS. In many instances, this option may involve undesired administrative efforts. Therefore, the

BASES

ACTIONS (continued)

A.1, A.2.1, A.2.2, A.2.3, and A.2.4 (continued)

allowance for sufficiently conservative actions is made (i.e., to suspend CORE ALTERATIONS, movement of irradiated fuel assemblies in the secondary containment, and any activities that could result in inadvertent draining of the reactor vessel).

Suspension of these activities shall not preclude completion of actions to establish a safe conservative condition. These actions minimize the probability of the occurrence of postulated events. It is further required to immediately initiate action to restore the required inverters and to continue this action until restoration is accomplished in order to provide the necessary inverter power to the plant safety systems.

Notwithstanding performance of the above conservative Required Actions, the unit is still without sufficient AC vital power sources to operate in a safe manner. Therefore, action must be initiated to restore the minimum required AC vital power sources and continue until the LCO requirements are restored.

The Completion Time of immediately is consistent with the required times for actions requiring prompt attention. The restoration of the required inverters should be completed as quickly as possible in order to minimize the time the plant safety systems may be without power or powered from a the AC power supply through its 480 V/120 V bypass transformer.

SURVEILLANCE REQUIREMENTS

SR 3.8.8.1

This Surveillance verifies that the inverters are functioning properly with all required circuit breakers closed and AC vital buses energized from the inverter. The verification of proper voltage and frequency output ensures that the required power is readily available for the instrumentation and control equipment connected to the AC vital buses. The 7 day Frequency takes into account the redundant capability of the inverters and other indications available in the control room that alert the operator to inverter malfunctions.

REFERENCES

1. DCD Tier 2, Chapter 6.

2. DCD Tier 2, Chapter 15.

B 3.8 ELECTRICAL POWER SYSTEMS

B 3.8.9 Distribution Systems – Operating

BASES

BACKGROUND

The onsite Class 1E AC and DC electrical power distribution system is divided by division into three independent AC and four independent DC and AC vital bus electrical power distribution subsystems.

The primary AC distribution system consists of each 4.16 kV Engineered Safety Feature (ESF) bus that has two separate and independent offsite sources of power, as well as a dedicated onsite diesel generator (DG) source. Each 4.16 kV ESF bus is normally connected to a preferred source. If all offsite sources are unavailable, the onsite emergency DGs supply power to the 4.16 kV ESF buses. Control power for the 4.16 kV breakers is supplied from the Class 1E batteries. Additional description of this system may be found in the Bases for LCO 3.8.1, “AC Sources – Operating,” and the Bases for LCO 3.8.4, “DC Sources – Operating.”

The secondary plant AC distribution system includes 480 V ESF load centers and associated loads, motor control centers, and transformers. Each 480 V AC MCC is powered from its divisional 4.16 kV ESF Bus via a 4.16 kV/480 V transformer.

The 120 V AC vital buses A10, B10, C10, and D10 (Divisions I, II, III, and IV respectively) are arranged in four load groups and are normally powered from a divisional 480 V AC motor control center (MCC) via a rectifier, an inverter, and a static switch. Divisions I, II, and III are normally powered from Division I, II, and III 480 V AC MCCs, respectively. Division IV is normally powered from a Division II 480 V AC MCC since there is no fourth division of 480 V AC. However, each of the four DC electrical power distribution subsystems (including Division IV) is backed up by its own battery bank and will automatically supply power (via the inverter) in the event of low voltage output from the rectifier (which would occur, for example, if the 480 V AC divisional power is lost). The Bases for LCO 3.8.7, “Inverters – Operating,” describe the use of the four DC subsystems. In the event of an inoperable inverter, an alternate power supply for each 120 V AC vital bus is a divisional Class 1E 480 V/120 V bypass transformer powered from its divisional 480 V AC MCC; again, with no fourth division of 480 V AC, the alternate power supply to the Division IV 120 V AC bus is a Division II 480 V AC MCC.

The RPS/MSIV logic and control in each of the four divisions use redundant power supplies, AC vital and AC instrument power. The 120 V AC instrumentation power buses A10/A20, B10/B20, C10/C20, and D10/D20 (Divisions I, II, III, and IV respectively) are arranged in four load groups and are normally powered from a divisional 480 VAC motor

BASES

BACKGROUND (continued)

control center (MCC) via a divisional Class 1E 480 V/120 V transformer powered from its divisional 480 V AC MCC; again, with no fourth division of 480 V AC, the alternate power supply to the Division IV 120 V AC bus is a Division II 480 V AC MCC.

There are four independent 125 VDC electrical power distribution subsystems. The list of all distribution buses is located in Table B 3.8.9-1.

APPLICABLE SAFETY ANALYSES

The initial conditions of Design Basis Accident (DBA) and transient analyses in DCD Tier 2, Chapter 6 (Ref. 1) and Chapter 15 (Ref. 2), assume ESF systems are OPERABLE. The AC, DC, and AC vital bus electrical power distribution systems are designed to provide sufficient capacity, capability, redundancy, and reliability to ensure the availability of necessary power to ESF systems so that the fuel, Reactor Coolant System, and containment design limits are not exceeded. These limits are discussed in more detail in the Bases for Section 3.2, Power Distribution Limits; Section 3.4, Reactor Coolant System (RCS); and Section 3.6 Containment Systems.

The OPERABILITY of the AC, DC, and AC vital bus electrical power distribution systems is consistent with the initial assumptions of the accident analyses and is based upon meeting the design basis of the plant. This includes maintaining the AC and DC electrical power sources and associated distribution systems OPERABLE during accident conditions in the event of:

a. An assumed loss of all offsite power or onsite AC electrical power; and

b. A worst case single failure.

The AC, DC, and AC vital bus electrical power distribution systems satisfy Criterion 3 of the NRC Policy Statement.

LCO

The required AC, DC, and AC vital bus power distribution subsystems listed in Table B 3.8.9-1 ensure the availability of AC, DC, and AC vital bus electrical power for the systems required to shut down the reactor and maintain it in a safe condition after an anticipated operational occurrence (AOO) or a postulated DBA. All divisional AC, DC, and AC vital bus electrical power primary distribution subsystems are required to be OPERABLE.

Maintaining the three Divisions of AC and the four Divisions of DC and AC vital bus electrical power distribution subsystems OPERABLE ensures that the redundancy incorporated into the design of ESF systems

BASES

LCO (continued)

Bypass System inoperable, modifications to the MCPR limits (LCO 3.2.2, is not defeated. Any two of Divisions I, II, and III of the AC, DC, and AC vital distribution systems are capable of providing the necessary electrical power to the associated ESF components. In addition, any two of Divisions I, II, III, and IV of the DC and AC vital distribution systems except the combination of Divisions II and IV systems (which are vulnerable to common failure because of their common AC power supply) are capable of providing the necessary electrical power to the associated

RPS and ECCS safety system logic and control system components. Therefore, a single failure within any system or within an electrical power distribution subsystem does not prevent safe shutdown of the reactor.

OPERABLE AC, DC, and AC vital bus electrical power distribution subsystems require the associated buses (listed in Table B 3.8.9-1) to be energized to their proper voltages. With the exception of a special set of manual interlocks through the spare battery chargers, there are no tie breakers between redundant safety related AC, DC, and AC vital bus power distribution subsystems. This prevents any electrical malfunction in any power distribution subsystem from propagating to a redundant subsystem, which could cause the failure of the redundant subsystem and a loss of essential safety function(s). It does not, however, preclude redundant Class 1E 4.16 kV buses from being powered from the same offsite circuit.

APPLICABILITY

The electrical power distribution subsystems are required to be OPERABLE in MODES 1, 2, and 3 to ensure that:

a. Acceptable fuel design limits and reactor coolant pressure boundary limits are not exceeded as a result of AOOs or abnormal transients; and

b. Adequate core cooling is provided, and containment OPERABILITY and other vital functions are maintained, in the event of a postulated DBA.

Electrical power distribution subsystem requirements for MODES 4 and 5 are covered in the Bases for LCO 3.8.10, “Distribution Systems – Shutdown.”

BASES

ACTIONS

A.1, A.2, A.3, and A.4

With one or more required AC buses, load centers, motor control centers, or distribution panels (except AC vital buses), in one division inoperable, the remaining AC electrical power distribution subsystems (other divisions) are capable of supporting the minimum safety functions necessary to shut down the reactor and maintain it in a safe shutdown condition, assuming no single failure. The overall reliability is reduced, however, because a single failure in the remaining power distribution subsystems could result in the minimum required ESF functions not being supported. Therefore, the required AC buses, load centers, motor control centers, and distribution panels must be restored to OPERABLE status within 72 hours.

The Condition A worst scenario is one division without AC power (i.e., no offsite power to the division and the associated DG inoperable). In this Condition, the unit is more vulnerable to a complete loss of AC power. If Condition A is entered, Required Action A.5 allows 72 hours to restore the inoperable AC electrical power distribution subsystem to OPERABLE status, provided the combustion turbine generator (CTG) is verified functional through testing within 12 hours and its capability of being aligned to the other OPERABLE ESF buses is verified, initially within 12 hours, and once per 8 hours thereafter. The functional capability of the CTG is verified in this Condition to be capable of being aligned to the OPERABLE ESF buses to provide a backup power source during a loss of all AC event. At the same time, the unit operators' attention should be focused on minimizing the potential for loss of power to the remaining two divisions by stabilizing the unit, and on restoring power to the affected division. The 72 hour time limit before requiring a unit shutdown in this Condition is acceptable because:

a. There is potential for decreased safety if the unit operators' attention is diverted from the evaluations and actions necessary to restore power to the affected division to the actions associated with taking the unit to shutdown within this time limit.

b. The potential for an event in conjunction with a single failure of a redundant component in the division with AC power. (The redundant component is verified OPERABLE in accordance with Specification 5.8, "Safety Function Determination Program (SFDP).")

The second Completion Time for Required Action A.4 establishes a limit on the maximum time allowed for any combination of required distribution subsystems to be inoperable during any single contiguous occurrence of failing to meet the LCO. If Condition A is entered while, for instance, a DC bus is inoperable and subsequently returned to OPERABLE status, the LCO may already have been not met for up to 72 hours.

BASES

ACTIONS (continued)

A.1, A.2, A.3, and A.4 (continued)

This situation could lead to a total duration of 6 days, since initial failure of the LCO, to restore the AC distribution system. At this time, a DC circuit could again become inoperable, and AC distribution could be restored OPERABLE. This could continue indefinitely.

This Completion Time allows for an exception to the normal “time zero” for beginning the allowed outage time “clock.” This results in establishing the “time zero” at the time the LCO was initially not met, instead of at the time Condition A was entered. The 7 day Completion Time is an acceptable limitation on this potential to fail to meet the LCO indefinitely.

Required Action A.2 is specified so that appropriate actions are implemented in accordance with the affected required features of LCO 3.4.7 for RHR Shutdown Cooling in MODE 3.

B.1 and B.2

With one AC vital bus inoperable, the remaining OPERABLE AC vital buses are capable of supporting the minimum safety functions necessary to shut down and maintain the unit in the safe shutdown condition. Overall trip reliability is maintained, however, because the vital AC buses supply power to the RPS/MSIV logic and control (one of four RPS/MSIV channel trip in SSLC on loss of power), to redundant scram pilot and MSIV pilot solenoids, NMS, and PRRM. Therefore, the required AC vital bus can be restored to OPERABLE status within 72 hours.

Condition B represents one AC vital bus without power; potentially both the DC source and the associated AC source nonfunctioning. In this situation, the plant is significantly more vulnerable to a complete loss of all noninterruptible power. It is, therefore, imperative that the operator’s attention focus on stabilizing the plant, minimizing the potential for loss of power to the remaining three vital buses, and restoring power to the affected vital bus.

The AC vital buses do not provide power to the SSLC for the ECCS. Therefore, the 72-hour Completion Time is specified. The 72-hour Completion Time also takes into account the importance to safety of restoring the AC vital bus to OPERABLE status, the redundant capability afforded by the other OPERABLE vital buses, and the low probability of a DBA occurring during this period.

BASES

ACTIONS (continued)

B.1 and B.2 (continued)

The second Completion Time for Required Action B.1 establishes a limit on the maximum time allowed for any combination of required distribution subsystems to be inoperable during any single contiguous occurrence of failing to meet the LCO. If Condition B is entered while, for instance, an AC bus is inoperable and subsequently returned OPERABLE, the LCO may already have not been met for up to 72 hours. This situation could lead to a total duration of 3 days, since initial failure of the LCO, for restoring the vital bus distribution system. At this time, an AC division could again become inoperable, and vital bus distribution could be restored to OPERABLE. This could continue indefinitely.

This Completion Time allows for an exception to the normal “time zero” for beginning the allowed outage time “clock.” This allowance results in establishing the “time zero” at the time the LCO was initially not met, instead of at the time that Condition B was entered. The 7-day Completion Time is an acceptable limitation on this potential of failing to meet the LCO indefinitely.

Action B.2 is specified so that appropriate restrictions are implemented in accordance with the affected required feature(s) of the LCOs’ ACTIONS.

C.1 and C.2

In Condition C, the Division IV AC vital bus and one other vital bus are inoperable. Because this condition is more severe than that of Condition B, only 2 hours are allowed to restore one of the inoperable AC vital buses to OPERABLE status. This 2 hour Completion Time reflects a reasonable time to assess unit status as a function of the two inoperable AC vital buses and, if one of the buses is not restored to OPERABLE status, to prepare to effect an orderly and safe unit shutdown.

D.1, D.2, D.3, and D.4

With one DC electrical power distribution subsystem from Division I, II, or III inoperable, the remaining DC electrical power distribution subsystems are capable of supporting the minimum safety functions necessary to shut down the reactor and maintain it in a safe shutdown condition, assuming no single failure. The overall reliability is reduced, however, because a single failure in the remaining DC electrical power distribution subsystems (except Division IV) could result in the minimum required ESF functions not being supported.

BASES

ACTIONS (continued)

D.1, D.2, D.3, and D.4 (continued)

If Condition D is entered, Required Action D.4 allows 72 hours to restore the inoperable DC electrical power distribution subsystem to OPERABLE status, provided the combustion turbine generator (CTG) is verified functional through testing within 12 hours and its capability of being aligned to the two unaffected ESF buses is verified, initially within 12 hours, and once per 8 hours thereafter. One AC electrical division and its loads are affected by loss of a DC electrical power distribution subsystem because the DC electrical power subsystem provides control functions to its associated divisional DG, AC distribution circuit breakers, and other AC loads. Because a DG, its associated AC distribution system, and RCIC (Div. I) are impacted by the loss of the DC electrical power distribution subsystem, the functional capability of the CTG is verified in this Condition to be capable of being aligned to the unaffected ESF buses to provide a backup power source during a loss of all AC power event.

Condition D represents one division (either Division I, II, or III) without adequate DC power, potentially with both the battery significantly degraded and the associated charger nonfunctioning. In this situation, the plant is significantly more vulnerable to a complete loss of all DC power. It is, therefore, imperative that the operator's attention focus on stabilizing the plant, minimizing the potential for loss of power to the remaining divisions, and restoring power to the affected division.

The second Completion Time for Required Action D.4 establishes a limit on the maximum time allowed for any combination of required distribution subsystems to be inoperable during any single contiguous occurrence of failing to meet the LCO. If Condition D is entered while, for instance, an AC bus is inoperable and subsequently returned OPERABLE, the LCO may already have been not met for up to 72 hours. This situation could lead to a total duration of 6 days, since initial failure of the LCO, to restore the DC distribution system. At this time, an AC division could again become inoperable, and DC distribution could be restored OPERABLE. This could continue indefinitely.

This Completion Time allows for an exception to the normal "time zero" for beginning the allowed outage time "clock." This allowance results in establishing the "time zero" at the time the LCO was initially not met, instead of the time Condition C was entered. The 7-day Completion Time is an acceptable limitation on this potential of failing to meet the LCO indefinitely.

Action D.1 is specified so that appropriate restrictions are implemented in accordance with the affected required feature(s) of the LCOs' ACTIONS.

BASES

ACTIONS (continued)

E.1

In Condition E, the Division IV DC electrical power distribution subsystem is inoperable. Required Actions E.1 allows 2 hours to declare affected required features inoperable. Division IV is less critical than the other three DC electrical power distribution subsystems because of its limited role in actuating safety related functions. Its loss is not as critical as a loss of one of the other DC distribution subsystems, and the less restrictive ACTIONS of affected LCOs are appropriate.

F.1 and F.2

In Condition F, the Division IV DC electrical power distribution subsystem and one other DC distribution subsystem are inoperable. Because this condition is more severe than that of Condition E, only 2 hours are allowed to restore one of the inoperable DC distribution subsystems to OPERABLE status. This 2 hour Completion Time reflects a reasonable time to assess unit status as a function of the two inoperable DC distribution subsystems and, if one of the subsystems is not restored to OPERABLE status, to prepare to effect an orderly and safe unit shutdown.

G.1 and G.2

If the inoperable electrical power distribution system cannot be restored to OPERABLE status within the associated Completion Times, the plant must be bought to a MODE in which the LCO does not apply. To achieve this status, the plant must be brought to at least MODE 3 within 12 hours and to MODE 4 within 36 hours. The allowed Completion Times are reasonable, based on operating experience, to reach the required plant conditions from full power conditions in an orderly manner and without challenging plant systems.

SURVEILLANCE REQUIREMENTS	SR 3.8.9.1 Meeting this Surveillance verifies that the AC, DC, and AC vital bus electrical power distribution systems are functioning properly, with all the required circuit breakers closed and the buses energized from normal power. The verification of proper voltage availability on the buses ensures that the required power is readily available for motive as well as control functions for critical system loads connected to these buses. The 7 day Frequency takes into account the redundant capability of the AC, DC, and AC vital bus electrical power distribution subsystems, and other indications available in the control room that alert the operator to subsystem malfunctions.
REFERENCES	1. DCD Tier 2, Chapter 6. 2. DCD Tier 2, Chapter 15. 3. Regulatory Guide 1.93, December 1974.

Table B 3.8.9-1 (page 1 of 1)
AC, DC, and AC Vital Bus Electrical Power Distribution System

SYSTEM	BUS TYPE AND VOLTAGE	DIVISION 1*	DIVISION 2*	DIVISION 3*	DIVISION 4*
AC Buses	ESF Bus 4.16 kV	M/C A3	M/C B3	M/C C3	Not Applicable
	Power Center 480 V	P/C E10 P/C E20	P/C F10 P/C F20	P/C G10 P/C G20	
	Motor Control Center 480 V	MCC E110 MCC E111 MCC E112 MCC E113 MCC E114 MCC E120 MCC E121 MCC E260	MCC F110 MCC F111 MCC F112 MCC F113 MCC F114 MCC F120 MCC F121 MCC F260	MCC G110 MCC G111 MCC G120 MCC G121 MCC G260 IP C10 IP C20	
	Distribution Panel 120 V	IP A10 IP A20	IP B10 IP B20		IP D10*** IP D20***
DC Buses	Motor Control Center 125 V	DC MCC A1			
	Distribution Panel 125 V	DC A10 DC A20	DC B10 DC B20	DC C10 DC C20	DC D10** DC D20**
AC Vital Buses	CONSTANT VOLTAGE, CONSTANT FREQUENCY DISTRIBUTION PANEL 120 V	A11 A21	B11 B21	C11 C21	D11*** D21***

* Each division of the AC, DC, and AC vital bus electrical power distribution system is a subsystem.
** The battery charger for Division 4 DC subsystem is powered by a Division 2 480 V AC motor control center.
*** The normal power source for the Division 4 AC vital and AC instrument power bus subsystems, is a Division 2 480 V AC motor control center.

B 3.8 ELECTRICAL POWER SYSTEMS

B 3.8.10 Distribution Systems – Shutdown

BASES

BACKGROUND

A description of the AC, DC, and AC vital bus electrical power distribution systems is provided in the Bases for LCO 3.8.9, “Distribution Systems – Operating.”

APPLICABLE SAFETY ANALYSES

The initial conditions of Design Basis Accident and transient analyses in DCD Tier 2, Chapter 6 (Ref. 1) and Chapter 15 (Ref. 2), assume Engineered Safety Feature (ESF) systems are OPERABLE. The AC, DC, and AC vital bus electrical power distribution systems are designed to provide sufficient capacity, capability, redundancy, and reliability to ensure the availability of necessary power to ESF systems so that the fuel, Reactor Coolant System, and containment design limits are not exceeded.

The OPERABILITY of the AC, DC, and AC vital bus electrical power distribution system is consistent with the initial assumptions of the accident analyses and the requirements for the supported systems’ OPERABILITY.

The OPERABILITY of the minimum AC, DC, and AC vital bus electrical power sources and associated power distribution subsystems during MODES 4 and 5 ensures that:

a. The facility can be maintained in the shutdown or refueling condition for extended periods;

b. Sufficient instrumentation and control capability is available for monitoring and maintaining the unit status; and

c. Adequate power is provided to mitigate events postulated during shutdown, such as an inadvertent drain down of the vessel or a fuel handling accident.

The AC and DC electrical power distribution systems satisfy Criterion 3 of the NRC Policy Statement.

BASES

LCO

Various combinations of subsystems, equipment, and components are required OPERABLE by other LCOs, depending on the specific plant condition. Implicit in those requirements is the required OPERABILITY of necessary support required features. This LCO explicitly requires energization of the portions of the electrical distribution system necessary to support OPERABILITY of Technical Specifications' required systems, equipment, and components – both specifically addressed by their own LCOs, and implicitly required by the definition of OPERABILITY.

Maintaining these portions of the distribution system energized ensures the availability of sufficient power to operate the plant in a safe manner to mitigate the consequences of postulated events during shutdown (e.g., fuel handling accidents and inadvertent reactor vessel drain down).

APPLICABILITY

The AC and DC electrical power distribution subsystems required to be OPERABLE in MODES 4 and 5 and during movement of irradiated fuel assemblies in the secondary containment provide assurance that:

a. Systems to provide adequate coolant inventory makeup are available for the irradiated fuel in the core in case of an inadvertent drain down of the reactor vessel;

b. Systems needed to mitigate a fuel handling accident are available;

c. Systems necessary to mitigate the effects of events that can lead to core damage during shutdown are available; and

d. Instrumentation and control capability is available for monitoring and maintaining the unit in a cold shutdown or refueling condition.

The AC, DC, and AC vital bus electrical power distribution subsystem requirements for MODES 1, 2, and 3 are covered in LCO 3.8.9.

ACTIONS

A.1, A.2.1, A.2.2, A.2.3, A.2.4, and A.2.5

Although redundant required features may require redundant divisions of electrical power distribution subsystems to be OPERABLE, one OPERABLE distribution subsystem division may be capable of supporting sufficient required features to allow continuation of CORE ALTERATIONS, fuel movement, and operations with a potential for draining the reactor vessel. By allowing the option to declare required features associated with an inoperable distribution subsystem inoperable, appropriate restrictions are implemented in accordance with the affected distribution subsystem LCO's Required Actions. In many instances, this

BASES

ACTIONS (continued)

A.1, A.2.1, A.2.2, A.2.3, A.2.4, and A.2.5 (continued)

option may involve undesired administrative efforts. Therefore, the allowance for sufficiently conservative actions is made (i.e., to suspend CORE ALTERATIONS, during movement of irradiated fuel assemblies in the secondary containment and any activities that could result in inadvertent draining of the reactor vessel).

Suspension of these activities shall not preclude completion of actions to establish a safe conservative condition. These actions minimize the probability of the occurrence of postulated events. It is further required to immediately initiate action to restore the required AC and DC electrical power distribution subsystems and to continue this action until restoration is accomplished in order to provide the necessary power to the plant safety systems.

Notwithstanding performance of the above conservative Required Actions, a required residual heat removal-shutdown cooling (RHR-SDC) subsystem may be inoperable. In this case, these Required Actions of Condition A do not adequately address the concerns relating to coolant circulation and heat removal. Pursuant to LCO 3.0.6, the RHR-SDC ACTIONS would not be entered. Therefore, the Required Actions of Condition A direct declaring RHR-SDC inoperable, which results in taking the appropriate RHR-SDC ACTIONS.

The Completion Time of immediately is consistent with the required times for actions requiring prompt attention. The restoration of the required distribution subsystems should be completed as quickly as possible in order to minimize the time the plant safety systems may be without power.

SURVEILLANCE REQUIREMENTS

SR 3.8.10.1

This Surveillance verifies that the AC, DC, and AC vital bus electrical power distribution subsystem is functioning properly, with the buses energized. The verification of proper voltage availability on the buses ensures that the required power is readily available for motive as well as control functions for critical system loads connected to these buses. The 7 day Frequency takes into account the redundant capability of the electrical power distribution subsystems, as well as other indications available in the control room that alert the operator to subsystem malfunctions.

BASES

REFERENCES

1. DCD Tier 2, Chapter 6.

2. DCD Tier 2, Chapter 15.

B 3.8 ELECTRICAL POWER SYSTEMS

B 3.8.11 AC Sources – Shutdown (Low Water Level)

BASES

BACKGROUND

A description of the AC sources is provided in the Bases for LCO 3.8.1, "AC Sources – Operating."

APPLICABLE SAFETY ANALYSES

The OPERABILITY o f the minimum AC sources during MODE 4 and MODE 5 with water level in the refueling cavity < 7.0 meters above the reactor pressure vessel flange ensures that:

a. The unit can be maintained in the shutdown or refueling condition for extended periods;

b. Sufficient instrumentation and control capability is available for monitoring and maintaining the unit status; and

c. Adequate AC electrical power is provided to mitigate events postulated during shutdown, such as an inadvertent drain down of the vessel, loss of decay heat removal, or a fuel handling accident.

In general, when the unit is shut down the Technical Specifications (TS) requirements ensure that the unit has the capability to mitigate the consequences of postulated accidents. However, assuming a single failure and concurrent loss of all offsite or loss of all onsite power is not required. The rationale for this is based on the fact that many Design Basis Accidents (DBAs) that are analyzed in MODES 1, 2, and 3 have no specific analyses in MODES 4 and 5. Worst case bounding events are deemed not credible in MODES 4 and 5 because the energy contained within the reactor pressure boundary, reactor coolant temperature and pressure, and the corresponding stresses result in the probabilities of occurrence significantly reduced or eliminated, and minimal consequences. These deviations from DBA analysis assumptions and design requirements during shutdown conditions are allowed by the LCO for required systems.

During MODES 1, 2, and 3, various deviations from the analysis assumptions and design requirements are allowed within the ACTIONS. This allowance is in recognition that certain testing and maintenance activities must be conducted provided an acceptable level of risk is not exceeded. During MODES 4 and 5, performance of a significant number of required testing and maintenance activities is also required. In

BASES

APPLICABLE SAFETY ANALYSES (continued)

MODES 4 and 5, the activities are generally planned and administratively controlled. Relaxations from typical MODE 1, 2, and 3 LCO requirements are acceptable during shutdown MODES based on:

a. The fact that time in an outage is limited. This is a risk prudent goal as well as utility economic consideration.

b. Requiring appropriate compensatory measures for certain conditions. These may include administrative controls, reliance on systems that do not necessarily meet typical design requirements applied to systems credited in operating MODE analyses, or both.

c. Prudent utility consideration of the risk associated with multiple activities that could affect multiple systems.

d. Maintaining, to the extent practical, the ability to perform required functions (even if not meeting MODE 1, 2, and 3 OPERABILITY requirements) with systems assumed to function during an event.

In the event of an accident during shutdown, this LCO ensures the capability of supporting systems necessary to avoid immediate difficulty, assuming either a loss of all offsite power or a loss of all onsite (diesel generator (DG)) power.

The AC sources satisfy Criterion 3 of the NRC Policy Statement.

LCO

One offsite circuit capable of supplying onsite Class 1E power distribution subsystem(s) of LCO 3.8.10, “Distribution Systems – Shutdown,” ensures that all required loads on Division I, Division II, and Division III are powered from offsite power. Two or more OPERABLE DGs available in standby to supply electrical power to required OPERABLE features via the associated Engineered Safety Feature (ESF) buses that are required to be OPERABLE by LCO 3.8.10, ensures a diverse power source is available, assuming a loss of the offsite circuit. Together, OPERABILITY of the required offsite circuit and DGs ensures the availability of sufficient AC sources to operate the plant in a safe manner and to mitigate the consequences of postulated events during shutdown (e.g., fuel handling accidents, reactor vessel drain down, and loss of decay heat removal).

The qualified offsite circuit must be capable of maintaining rated frequency and voltage while connected to ESF buses, and of accepting required loads during an accident. The qualified offsite circuit is either the normal or alternate preferred power circuits to the AC Electric Power Distribution System that are described in DCD Tier 2, Chapter 8 and are

BASES

LCO (continued)

part of the licensing basis for the plant. The normal preferred circuit consists of the switching stations breaker to the main transformers, the generator breaker, the disconnect links to the unit auxiliary transformers, and the circuit path from the offsite transmission network to all of the 4.16 kV ESF buses required by LCO 3.8.10 including feeder breakers at the 4.16 kV ESF buses. The alternate preferred circuit consists of the switching station breakers to the reserve transformers and the circuit path from the offsite transmission network to all of the 4.16 kV ESF buses required by LCO 3.8.10 including feeder breakers at the 4.16 kV ESF buses.

Each required DG must be capable of starting, accelerating to required speed and voltage, and connecting to its respective ESF bus on detection of bus undervoltage, and accepting required loads. This sequence must be accomplished within 20 seconds. Each DG must also be capable of accepting required loads within the assumed loading sequence intervals, and must continue to operate until offsite power can be restored to the ESF buses. These capabilities are required to be met from a variety of initial conditions such as: DG in standby with the engine hot, DG in standby with the engine at ambient conditions, and DG operating in parallel test mode.

Proper sequencing of loads, including tripping of nonessential loads, is a required function for DG OPERABILITY.

During a shutdown condition, it is acceptable for a single offsite power circuit to supply all required divisions of electrical power.

As described in Applicable Safety Analyses, in the event of an accident during shutdown, the TS are designed to maintain the plant in a condition such that, even with a single failure, the plant will not be in immediate difficulty.

APPLICABILITY

The AC sources required to be OPERABLE in MODE 4 and MODE 5 with water level in the refueling cavity < 7.0 meters above the reactor pressure vessel flange during movement of irradiated fuel assemblies in the secondary containment provide assurance that:

a. Systems are available to provide adequate coolant inventory makeup to maintain irradiated fuel in the core covered with coolant in case of an inadvertent drain down of the reactor vessel;

b. Systems needed to mitigate a fuel handling accident are available;

c. Systems necessary to mitigate the effects of events that can lead to core damage during shutdown are available; and

BASES

APPLICABILITY (continued)

d. Instrumentation and control capability is available for monitoring and maintaining the unit in a cold shutdown condition or refueling condition.

e. Systems are available to remove decay heat from the irradiated fuel in the core.

The AC power requirements for MODES 1, 2, and 3 are covered in LCO 3.8.1; and for MODE 5 with the water level in the refueling cavity ≥ 7.0 meters above the reactor pressure vessel flange, in LCO 3.8.2.

ACTIONS

A.1.1 and A.1.2

An offsite circuit is considered inoperable if it is not available to one required ESF bus. If two or more ESF buses are required per LCO 3.8.10, division(s) with offsite power still available may be capable of supporting sufficient required features to allow continuation of CORE ALTERATIONS, fuel movement, and operations with a potential for draining the reactor vessel for an 8 hour period. This 8-hour period is reasonable provided the Required Actions of LCO 3.8.10 do not apply.

However, if after 8 hours, should any required features still have no power available from an OPERABLE offsite circuit, Required Action A.1.2 requires declaring such features inoperable so that appropriate restrictions can be implemented in accordance with the affected required feature(s) LCOs' ACTIONS.

A.2.1, A.2.2, A.2.3, and A.2.4

Within 8 hours of determining the required offsite circuit is inoperable (not available to some or all required ESF buses), Required Action A.1.2 allows the choice of declaring affected required features inoperable. Since this option may involve undesirable administrative efforts, Required Actions A.2.1, A.2.2, A.2.3, and A.2.4 alternatively allow performance of other sufficiently conservative actions, thereby avoiding any undesirable administrative efforts. With the required offsite circuit inoperable (unable to supply all required ESF buses), the minimum required diversity of AC power sources is not available. It is, therefore, required to suspend CORE ALTERATIONS, movement of irradiated fuel assemblies in the secondary containment, and activities that could potentially result in inadvertent draining of the reactor vessel.

BASES

ACTIONS (continued)

A.2.1, A.2.2, A.2.3, and A.2.4 (continued)

Suspension of these activities shall not preclude completion of actions to establish a safe conservative condition. These actions minimize the probability of the occurrence of postulated events. It is further required to initiate action immediately to restore the required offsite circuit to OPERABLE status and to continue this action until restoration is accomplished in order to provide the necessary (and preferred) AC power to the plant safety systems.

Notwithstanding performance of the above conservative Required Actions, the plant is still without sufficient AC power sources to operate in a safe manner. Therefore, action must be initiated to restore the minimum required AC power sources and continue until the LCO requirements are restored.

The Completion Time of immediately for restoring the required offsite circuit to OPERABLE status is consistent with the required times for actions requiring prompt attention. The restoration of the required AC electrical power sources should be completed as quickly as possible in order to minimize the time during which the plant safety systems may be without sufficient power.

Pursuant to LCO 3.0.6, the Distribution System ACTIONS are not entered even if all AC sources to it are inoperable, resulting in de-energization. Therefore, the Required Actions of Condition A have been modified by a Note to indicate that when Condition A is entered with no AC power to one ESF bus, ACTIONS for LCO 3.8.10 must be immediately entered. This Note allows Condition A to provide requirements for the loss of the offsite circuit whether or not a division is de-energized. LCO 3.8.10 provides the appropriate restrictions for the situation involving a de-energized division.

B.1, B.2, and B.3

With one required DG inoperable, 14 days are allowed for restoring the DG to OPERABLE status provided the combustion turbine generator (CTG) is verified to be functional through testing within 1 hour and its breakers are verified to be aligned to the ESF bus associated with the inoperable DG within 1 hour and every 8 hours thereafter. As long as the CTG is available to serve as a backup to the inoperable DG, shutdown activities (that would otherwise be prohibited in a low water level condition) in MODES 4 and 5 are permitted. This 14-day Completion Time is considered reasonable because of the reliability and convenience

BASES

ACTIONS (continued)

B.1, B.2, and B.3 (continued)

of the CTG, the low probability of a shutdown transient (e.g., loss of decay heat removal) occurring during this time period, and the availability of at least one other OPERABLE DG

The CTG is considered functional when the requirements of DCD Tier 2, Section 9.5.13.19 are satisfied and the CTG is verified to start from standby conditions and achieves steady state voltage ≥ 12.42 kV and ≤ 15.18 kV, and frequency ≥ 58.8 Hz and ≤ 61.2 Hz in less than 10 minutes.

C.1, C.2, C.3, C.4, and C.5

When a Required Action and Completion Time of Condition B are not met (either the CTG is not functional or alignable to the required ESF bus, or one DG cannot be restored to OPERABLE status), or when two or more of the required DGs are inoperable, the required diversity of AC power sources to plant safety systems is not available. Required Actions C.1, C.2, and C.3, therefore, suspend CORE ALTERATIONS, movement of irradiated fuel assemblies in the secondary containment, and activities that could potentially result in inadvertent draining of the reactor vessel. Suspension of these activities shall not preclude completion of actions to establish a safe conservative condition. These actions minimize the probability of the occurrence of postulated events. It is further required to initiate action immediately to restore the required DG(s) OPERABLE status and to continue this action until restoration is accomplished in order to provide the required diversity of AC power sources to plant safety systems.

SURVEILLANCE REQUIREMENTS

See Bases for LCO 3.8.2.

REFERENCES

None.

B 3.9 REFUELING OPERATIONS

B 3.9.1 Refueling Equipment Interlocks

BASES

BACKGROUND

Refueling equipment interlocks restrict the operation of the refueling equipment or the withdrawal of control rods to reinforce unit procedures in preventing the reactor from achieving criticality during refueling. The refueling interlock circuitry senses the conditions of the refueling equipment and the control rods. Depending on the sensed conditions, interlocks are actuated to prevent the operation of the refueling equipment or the withdrawal of control rods.

GDC 26 of 10 CFR 50, Appendix A, requires that one of the two required independent reactivity control systems be capable of holding the reactor core subcritical under cold conditions (Ref. 1). The control rods, when fully inserted, serve as the system capable of maintaining the reactor subcritical in cold conditions during all fuel movement activities and accidents.

Two channels of instrumentation are provided to sense the position of the refueling machine, the loading of the refueling machine main hoist, and the full insertion of all control rods. With the reactor mode switch in the refuel position, the indicated conditions are combined in logic circuits to determine if all restrictions on refueling equipment operations and control rod insertion are satisfied.

A control rod not at its full-in position interrupts power to the refueling equipment and prevents operating the equipment over the reactor core when loaded with a fuel assembly. Conversely, the refueling equipment located over the core and loaded with fuel inserts a control rod withdrawal block in the Control Rod and Information System (RCIS) to prevent withdrawing a control rod.

The refueling machine has two mechanical switches that open before the machine and the fuel grapple are physically located over the reactor vessel. The main hoist has two switches that open when the hoist is loaded with fuel. The refueling interlocks use these indications to prevent operation of the refueling equipment with fuel loaded over the core whenever any control rod is withdrawn, or to prevent control rod withdrawal whenever fuel loaded refueling equipment is over the core (Ref. 2).

The hoist switches open at a load lighter than the weight of a single fuel assembly in water.

BASES

APPLICABLE SAFETY ANALYSES

The refueling interlocks are explicitly assumed in the safety analysis of the control rod removal error during refueling (Ref. 3). This analysis evaluates the consequences of control rod withdrawal during refueling. A prompt reactivity excursion during refueling could potentially result in fuel failure with subsequent release of radioactive material to the environment.

Criticality and, therefore, subsequent prompt reactivity excursions are prevented during the insertion of fuel, provided all control rods are fully inserted during the fuel insertion. The refueling interlocks accomplish this by preventing loading fuel into the core with any control rod withdrawn, or by preventing withdrawal of a rod from the core during fuel loading.

The refueling machine location switches activate at a point outside of the reactor core, such that, considering switch hysteresis and maximum machine momentum toward the core at the time of power loss with a fuel assembly loaded and a control rod withdrawn, the fuel is not over the core.

Refueling equipment interlocks satisfy Criterion 3 of the NRC Policy Statement.

LCO

To prevent criticality during refueling, the refueling interlocks associated with the reactor mode switch refuel position ensure that fuel assemblies are not loaded with any control rod withdrawn.

To prevent these conditions from developing, the all-rods-in, the refueling machine position, and the refueling machine main hoist fuel loaded inputs are required to be OPERABLE when the reactor mode switch is in the refuel position. These inputs are combined in logic circuits that provide refueling equipment or control rod blocks to prevent operations that could result in criticality during refueling operations.

APPLICABILITY

In MODE 5, a prompt reactivity excursion could cause fuel damage and subsequent release of radioactive material to the environment. The refueling equipment interlocks protect against prompt reactivity excursions during MODE 5. The interlocks are only required to be OPERABLE during in-vessel fuel movement with refueling equipment associated with the interlocks when the reactor mode switch is in the refuel position. The interlocks are not required to be OPERABLE when the reactor mode switch is in the shutdown position since a control rod block ensures that control rod withdrawal cannot occur simultaneously with in-vessel fuel movements.

BASES

APPLICABILITY (continued)

In MODES 1, 2, 3, and 4, the reactor pressure vessel head is on, and no fuel loading activities are possible. Therefore, the refueling interlocks are not required to be OPERABLE in these MODES.

ACTIONS

A.1

With one or more of the required refueling equipment interlocks inoperable, the unit must be placed in a condition in which the LCO does not apply. In-vessel fuel movement with the affected refueling equipment must be immediately suspended. This action ensures that operations are not performed with equipment that would potentially not be blocked from unacceptable operations (e.g., loading fuel into a cell with a control rod withdrawn). Suspension of in-vessel fuel movement shall not preclude completion of movement of a component to a safe position.

SURVEILLANCE REQUIREMENTS

SR 3.9.1.1

Performance of a CHANNEL FUNCTIONAL TEST demonstrates each required refueling equipment interlock will function properly when a simulated or actual signal indicative of a required condition is injected into the logic. The CHANNEL FUNCTIONAL TEST may be performed by any series of sequential, overlapping, or total channel steps so that the entire channel is tested.

The 7 day Frequency is based on engineering judgment and is considered adequate in view of other indications of refueling interlocks and their associated input status that are available to unit operations personnel.

REFERENCES

1. 10 CFR 50, Appendix A, GDC 26.
2. DCD Tier 2, Section 7.7.1.2.
3. DCD Tier 2, Section 15.4.1.1.

B 3.9 REFUELING OPERATIONS

B 3.9.2 Refuel Position Rod-Out Interlock

BASES

BACKGROUND

The refuel position rod-out interlock restricts the movement of control rods to reinforce unit procedures that prevent the reactor from becoming critical during refueling operations. During refueling operations no more than one control rod or rod pair associated with the same HCU is permitted to be withdrawn.

GDC 26 of 10 CFR 50, Appendix A, requires that one of the two required independent reactivity control systems be capable of holding the reactor core subcritical under cold conditions (Ref. 1). The control rods serve as the system capable of maintaining the reactor subcritical in cold conditions.

The refuel position rod-out interlock prevents the selection of an additional control rod for movement when any other control rod or rod pair is not fully inserted (Ref. 2). It is a logic circuit that has redundant channels. It uses the all-rods-in signal (from the control rod full-in position indicators discussed in LCO 3.9.4, “Control Rod Position Indication”) and a rod selection signal (from the Rod Control and Information System).

This Specification ensures that the performance of the refuel position rod-out interlock in the event of a Design Basis Accident meets the assumptions used in the safety analysis of Reference 3.

APPLICABLE SAFETY ANALYSES

The refuel position rod-out interlock is explicitly assumed in the safety analysis of the control rod removal error during refueling (Ref. 3). This analysis evaluates the consequences of control rod withdrawal during refueling. A prompt reactivity excursion during refueling could potentially result in fuel failure with subsequent release of radioactive material to the environment.

The refuel position rod-out interlock and adequate SDM (LCO 3.1.1) prevent criticality by preventing withdrawal of more than one control rod or rod pair. With one control rod or rod pair withdrawn, the core will remain subcritical, thereby preventing any prompt critical excursion.

The refuel position rod-out interlock satisfies Criterion 3 of the NRC Policy Statement.

BASES

LCO

To prevent criticality during MODE 5, the refuel position rod-out interlock ensures no more than one control rod or rod pair may be withdrawn. Both channels of the refuel position rod-out interlock are required to be OPERABLE.

APPLICABILITY

In MODE 5, with the reactor mode switch in the refuel position, the OPERABLE refuel position rod-out interlock provides protection against prompt reactivity excursions.

In MODES 1, 2, 3, and 4, the refuel position rod-out interlock is not required to be OPERABLE and is bypassed. In MODES 1 and 2, the Reactor Protection System (LCOs 3.3.1.1 and 3.3.1.2) and the control rods (LCO 3.1.3) provide mitigation of potential reactivity excursions. In MODES 3 and 4, with the reactor mode switch in the shutdown position, a control rod block (LCO 3.3.5.1) ensures all control rods are inserted, thereby preventing criticality during shutdown conditions.

ACTIONS

A.1 and A.2

With one or both channels of the refuel position rod-out interlock inoperable, the refueling interlocks may not be capable of preventing more than one control rod or rod pair from being withdrawn. This condition may lead to criticality.

Control rod withdrawal must be immediately suspended, and action must be immediately initiated to fully insert all insertable control rods in core cells containing one or more fuel assemblies. Action must continue until all such control rods are fully inserted. Control rods in core cells containing no fuel assemblies do not affect the reactivity of the core and, therefore, do not have to be inserted.

SURVEILLANCE REQUIREMENTS

SR 3.9.2.1

Proper functioning of the refueling position rod-out interlock requires the reactor mode switch to be in Refuel. During control rod withdrawal in MODE 5, improper positioning of the reactor mode switch and the RCIS GANG/SINGLE selection switch could, in some instances, allow improper bypassing of required interlocks. Therefore, this Surveillance imposes an additional level of assurance that the refueling position rod-out interlock will be OPERABLE when required. By “locking” the reactor mode switch in the proper position, an additional administrative control is in place to preclude operator errors from resulting in unanalyzed operation.

BASES

SURVEILLANCE REQUIREMENTS (continued)

SR 3.9.2.1 (continued)

The Frequency of 12 hours is sufficient in view of other administrative controls utilized during refueling operations to ensure safe operation.

SR 3.9.2.2

Performance of a CHANNEL FUNCTIONAL TEST on each channel demonstrates the associated refuel position rod-out interlock will function properly when a simulated or actual signal indicative of a required condition is injected into the logic. The CHANNEL FUNCTIONAL TEST may be performed by any series of sequential, overlapping, or total channel steps so that the entire channel is tested. The 7 day Frequency is considered adequate because of demonstrated circuit reliability, procedural controls on control rod withdrawals, and visual and audible indications available in the control room to alert the operator of control rods not fully inserted. To perform the required testing, the applicable condition must be entered (i.e., a control rod must be withdrawn from its full-in position). Therefore, SR 3.9.2.2 has been modified by a Note that states the CHANNEL FUNCTIONAL TEST is not required to be performed until 1 hour after any control rod is withdrawn.

REFERENCES

1. 10 CFR 50, Appendix A, GDC 26.
2. DCD Tier 2, Section 7.7.1.2.
3. DCD Tier 2, Section 15.4.1.1.

B 3.9 REFUELING OPERATIONS

B 3.9.3 Control Rod Position

BASES

BACKGROUND

Control rods provide the capability to maintain the reactor subcritical under all conditions and to limit the potential amount and rate of reactivity increase caused by a malfunction in the Control Rod Drive System. During refueling, movement of control rods is limited by the refueling interlocks (LCO 3.9.1 and LCO 3.9.2) or the control rod block with the reactor mode switch in the shutdown position (LCO 3.3.5.1).

GDC 26 of 10 CFR 50, Appendix A, requires that one of the two required independent reactivity control systems be capable of holding the reactor core subcritical under cold conditions (Ref. 1). The control rods serve as the system capable of maintaining the reactor subcritical in cold conditions.

The refueling interlocks and the RCIS GANG/SINGLE selection switch allow a single control rod to be withdrawn at any time unless fuel is being loaded into the core. However, during refueling, the RCIS is placed in the scram test mode which allows two control rods to be withdrawn for scram testing. To preclude loading fuel assemblies into the core with a control rod withdrawn, all control rods must be fully inserted. This prevents the reactor from achieving criticality during refueling operations.

APPLICABLE SAFETY ANALYSES

Prevention and mitigation of prompt reactivity excursions during refueling are provided by the refueling interlocks (LCO 3.9.1 and LCO 3.9.2), the SDM (LCO 3.1.1), the startup range monitor neutron flux scram (LCO 3.3.1.1), the average power range monitor neutron flux scram (LCO 3.3.1.1), and the control rod block instrumentation (LCO 3.3.5.1).

The safety analysis of the control rod removal error during refueling (Ref. 2) assumes the functioning of the refueling interlocks and adequate SDM. Additionally, prior to fuel reload, all control rods must be fully inserted to ensure that an inadvertent criticality does not occur.

Control rod position satisfies Criterion 3 of the NRC Policy Statement.

LCO

All control rods must be fully inserted during applicable refueling conditions to prevent an inadvertent criticality during refueling.

BASES

APPLICABILITY

During MODE 5, loading fuel into a core cell with the control rod withdrawn may result in inadvertent criticality. Therefore, the control rod must be inserted before loading fuel into a core cell. All control rods must be inserted before loading fuel to ensure that a fuel loading error does not result in loading fuel into a core cell with the control rod withdrawn.

In MODES 1, 2, 3, and 4, the reactor pressure vessel head is on, and no fuel loading activities are possible. Therefore, this Specification is not applicable in these MODES.

ACTIONS

A.1

With all control rods not fully inserted during the applicable conditions, an inadvertent criticality could occur that is not analyzed. All fuel loading operations must be immediately suspended. Suspension of these activities shall not preclude completion of movement of a component to a safe position.

SURVEILLANCE REQUIREMENTS

SR 3.9.3.1

During refueling, to ensure that the reactor remains subcritical, all control rods must be fully inserted prior to and during fuel loading. Periodic checks of the control rod position ensure this condition is maintained.

The 12 hour Frequency takes into consideration the procedural controls on control rod movement during refueling as well as the redundant functions of the refueling interlocks.

REFERENCES

1. 10 CFR 50, Appendix A, GDC 26.

2. DCD Tier 2, Section 15.4.1.1.

B 3.9 REFUELING OPERATIONS

B 3.9.4 Control Rod Position Indication

BASES

BACKGROUND

The full-in position indication channel for each control rod provides information necessary to the refueling interlocks to prevent inadvertent criticalities during refueling operations. For the Fine Motion Control Rod Drives (FMCRD), position is derived from synchros which have an analog output. The RCIS translates the 100% insertion signal from the synchro into a discrete full-in position signal to be used as a permissive in the refueling interlocks. During refueling, the refueling interlocks (LCO 3.9.1 and LCO 3.9.2) use the full-in position indication channels to limit the operation of the refueling equipment and the movement of the control rods. The absence of the full-in position indication channel signal for any control rod removes the all-rods-in permissive for the refueling equipment interlocks and prevents fuel loading. Also, this condition causes the refuel position rod-out interlock to not allow the withdrawal of any other control rod.

GDC 26 of 10 CFR 50, Appendix A, requires that one of the two required independent reactivity control systems be capable of holding the reactor core subcritical under cold conditions (Ref. 1). The control rods serve as the system capable of maintaining the reactor subcritical in cold conditions.

APPLICABLE SAFETY ANALYSES

Prevention and mitigation of prompt reactivity excursions during refueling are provided by the refueling interlocks (LCO 3.9.1 and LCO 3.9.2), the SDM (LCO 3.1.1), the startup range monitor neutron flux scram (LCO 3.3.1.1), the average power range monitor neutron flux scram (LCO 3.3.1.1), and the control rod block instrumentation (LCO 3.3.5.1).

The safety analysis for the control rod removal error during refueling (Ref. 2) assumes the functioning of the refueling interlocks and adequate SDM. The full-in position indication channel is required to be OPERABLE so that the refueling interlocks can ensure that fuel cannot be loaded with any control rod or rod pair withdrawn and that no more than one control rod or rod pair can be withdrawn at a time.

Control rod position indication satisfies Criterion 3 of the NRC Policy Statement.

BASES

LCO

One of the two control rod full-in position indication channels must be OPERABLE to provide the required inputs to the refueling interlocks. A channel is OPERABLE if it provides correct position indication to the refueling interlock logic.

APPLICABILITY

During MODE 5, the control rods must have OPERABLE full-in position indication channels to ensure the applicable refueling interlocks will be OPERABLE.

In MODES 1 and 2, requirements for control rod position are specified in LCO 3.1.3, “Control Rod OPERABILITY.” In MODES 3 and 4, with the reactor mode switch in the shutdown position, a control rod block (LCO 3.3.5.1) ensures all control rods are inserted, thereby preventing criticality during shutdown conditions.

ACTIONS

A Note has been provided to modify the ACTIONS related to control rod position indication channels. Section 1.3, Completion Times, specifies that once a Condition has been entered, subsequent trains, subsystems, components, or variables expressed in the Condition, discovered to be inoperable or not within limits, will not result in separate entry into the Condition. Section 1.3 also specifies that Required Actions of the Condition continue to apply for each additional failure, with Completion Times based on initial entry into the Condition. However, the Required Actions for control rods with inoperable position indication channels provide appropriate compensatory measures. As such, this Note has been provided, which allows separate Condition entry for each control rod with inoperable position indication channels.

A.1.1, A.1.2, A.1.3, A.2.1, and A.2.2

With required full-in position indication channels inoperable for one or more control rods, compensating actions must be taken to protect against potential reactivity excursions from fuel assembly insertions or control rod withdrawals. This may be accomplished by immediately suspending in-vessel fuel movement and control rod withdrawal, and immediately initiating action to fully insert all insertable control rods in core cells containing one or more fuel assemblies. Actions must continue until all insertable control rods in core cells containing one or more fuel assemblies are fully inserted. Suspension of in-vessel fuel movements and control rod withdrawal shall not preclude moving a component to a safe position.

BASES (continued)

ACTIONS (continued)

Alternatively, actions may be immediately initiated to fully insert the control rod(s) associated with the inoperable full-in position indicators(s) and to disarm the drive(s) to ensure that the control rod is not withdrawn. Actions must continue until all associated control rods are fully inserted and drives are disarmed.

Under these conditions, an inoperable full-in channel may be bypassed to allow refueling operations to proceed. An alternate method must be used to ensure the control rod is fully inserted (e.g., use the 0% position indication). Another option is to bypass Synchro A or Synchro B so that the OPERABLE synchro providing rod position data to both channels of the RCIS is used. If the readings of the two Synchros do not agree, the conditions will be alarmed to the operator to initiate bypass.

SURVEILLANCE REQUIREMENTS

SR 3.9.4.1

The full-in position indication channels provide input to the rod-out interlock and other refueling interlocks that require an all-rods-in permissive. The interlocks are activated when the full-in position indication for any control rod is not present, since this indicates that all rods are not fully inserted. Therefore, testing of the full-in position indication channels is performed to ensure that when a control rod is withdrawn, the full-in position indication is not present. Performing the SR each time a control rod is withdrawn is considered adequate because of the procedural controls on control rod withdrawals and the visual indications available in the control room to alert the operator to control rods not fully inserted.

REFERENCES

1. 10 CFR 50, Appendix A, GDC 26.

2. DCD Tier 2, Section 15.4.1.1.

B 3.9 REFUELING OPERATIONS

B 3.9.5 Control Rod OPERABILITY – Refueling

BASES

BACKGROUND

Control rods are components of the Control Rod Drive (CRD) System, the primary reactivity control system for the reactor. In conjunction with the Reactor Protection System, the CRD System provides the means for the reliable control of reactivity changes during refueling operation. In addition, the control rods provide the capability to maintain the reactor subcritical under all conditions and to limit the potential amount and rate of reactivity increase caused by a malfunction in the CRD System.

The CRD system also includes the Fine Motion Control Rod Drives (FMCRDs) and the CRD system instrumentation with which the RCIS directly interfaces. The FMCRDs can be inserted either hydraulically or electrically. In response to a scram signal, the FMCRD is inserted hydraulically via the stored energy in the scram accumulators. A redundant signal is also given to insert the FMCRD electrically via its motor drive. This diversity provides a high degree of assurance of rod insertion on demand.

GDC 26 of 10 CFR 50, Appendix A, requires that one of the two required independent reactivity control systems be capable of holding the reactor core subcritical under cold conditions (Ref. 1). The CRD System is the system capable of maintaining the reactor subcritical in cold conditions.

APPLICABLE SAFETY ANALYSES

Prevention and mitigation of prompt reactivity excursions during refueling are provided by refueling interlocks (LCO 3.9.1 and LCO 3.9.2), the SDM (LCO 3.1.1), the startup range monitor neutron flux scram (LCO 3.3.1.1), the average power range monitor neutron flux scram (LCO 3.3.1.1), and the control rod block instrumentation (LCO 3.3.5.1).

The safety analysis for the control rod removal error during refueling (Ref. 2) evaluates the consequences of control rod withdrawal during refueling. A prompt reactivity excursion during refueling could potentially result in fuel failure with subsequent release of radioactive material to the environment. Control rod scram provides backup protection should a prompt reactivity excursion occur.

Control rod OPERABILITY during refueling satisfies Criterion 3 of the NRC Policy Statement.

BASES

LCO

Each withdrawn control rod must be OPERABLE. The withdrawn control rod is considered OPERABLE if the scram accumulator pressure is > 12.75 MPaG and the control rod is capable of being automatically inserted upon receipt of a scram signal. Inserted control rods have already completed their reactivity control function.

APPLICABILITY

During MODE 5, withdrawn control rods must be OPERABLE to ensure that in a scram the control rods will insert and provide the required negative reactivity to maintain the reactor subcritical.

For MODES 1 and 2, control rod requirements are found in LCO 3.1.2, “Reactivity Anomalies,” LCO 3.1.3, “Control Rod OPERABILITY,” LCO 3.1.4, “Control Rod Scram Times,” and LCO 3.1.5, “Control Rod Scram Accumulators.” During MODES 3 and 4, control rods are only allowed to be withdrawn under LCO 3.10.3, “Control Rod Withdrawal - Hot Shutdown,” and LCO 3.10.4, “Control Rod Withdrawal - Cold Shutdown,” in the Special Operations section. These provide adequate requirements for control rod OPERABILITY during these conditions.

ACTIONS

A.1

With one or more withdrawn control rods inoperable, action must be immediately initiated to fully insert the inoperable control rod(s). Inserting the control rod(s) ensures that the shutdown and scram capabilities are not adversely affected. Actions must continue until the inoperable control rod(s) is fully inserted.

SURVEILLANCE REQUIREMENTS

SR 3.9.5.1 and SR 3.9.5.2

During MODE 5, the OPERABILITY of control rods is primarily required to ensure that a withdrawn control rod will automatically insert if a signal requiring a reactor shutdown occurs. Because no explicit analysis exists for automatic shutdown during refueling, the shutdown function is satisfied if the withdrawn control rod is capable of automatic insertion and the associated CRD scram accumulator pressure is ≥ 12.75 MPaG.

The 7 day Frequency takes into consideration equipment reliability, procedural controls over the scram accumulators, and control room alarms and indicating lights that indicate low accumulator charge pressures.

BASES

REFERENCES

1. 10 CFR 50, Appendix A, GDC 26.
2. DCD Tier 2, Section 15.4.1.1.

B 3.9 REFUELING OPERATIONS

B 3.9.6 Reactor Pressure Vessel (RPV) Water Level

BASES

BACKGROUND

The movement of fuel assemblies or handling of control rods within the RPV requires a minimum water level of 7.0 m above the top of the RPV flange. Sufficient water is necessary to retain iodine fission product activity in the water in the event of a fuel handling accident (Refs. 3.9.6-1 and 3.9.6-2). Sufficient iodine activity would be retained to limit offsite doses from the accident to ≤ 25% of 10 CFR 100 limits, as provided by the guidance of Reference 3.

APPLICABLE SAFETY ANALYSES

During movement of fuel assemblies or handling of control rods, the water level in the RPV and the spent fuel pool is an initial condition design parameter in the analysis of a fuel handling accident in containment postulated by Regulatory Guide 1.25 (Ref. 1). A minimum water level of 7.0 m allows a decontamination factor of 100 (Ref. 1) to be used in the accident analysis for iodine. This relates to the assumption that 99% of the total iodine released from the pellet to cladding gap of all the damaged fuel assembly rods is retained by the refueling cavity water. The fuel pellet to cladding gap is assumed to contain 10% of the total fuel rod iodine inventory (Ref. 1).

Analysis of the fuel handling accident inside containment is described in Reference 2. With a minimum water level of 7.0 m and a minimum decay time of 24 hours prior to fuel handling, the analysis and test programs demonstrate that the iodine release due to a postulated fuel handling accident is adequately captured by the water, and that offsite doses are maintained within allowable limits (Ref. 4).

RPV water level satisfies Criterion 2 of the NRC Policy Statement.

LCO

A minimum water level of 7.0 m above the top of the RPV flange is required to ensure that the radiological consequences of a postulated fuel handling accident are within acceptable limits, as provided by the guidance of Reference 3.

BASES

APPLICABILITY

LCO 3.9.6 is applicable when moving fuel assemblies or handling control rods (i.e., movement with other than the normal control rod drive) within the RPV. The LCO minimizes the possibility of a fuel handling accident in containment that is beyond the assumptions of the safety analysis. If irradiated fuel is not present within the RPV, there can be no significant radioactivity release as a result of a postulated fuel handling accident. Requirements for fuel handling accidents in the spent fuel storage pool are covered by LCO 3.7.8, “Fuel Pool Water Level.”

ACTIONS

A.1

If the water level is < 7.0 m above the top of the RPV flange, all operations involving movement of fuel assemblies and handling of control rods within the RPV shall be suspended immediately to ensure that a fuel handling accident cannot occur. The suspension of fuel movement and control rod handling shall not preclude completion of movement of a component to a safe position.

SURVEILLANCE REQUIREMENTS

SR 3.9.6.1

Verification of a minimum water level of 7.0 m above the top of the RPV flange ensures that the design basis for the postulated fuel handling accident analysis during refueling operations is met. Water at the required level limits the consequences of damaged fuel rods, which are postulated to result from a fuel handling accident in containment (Ref. 2).

The Frequency of 24 hours is based on engineering judgment and is considered adequate in view of the large volume of water and the normal procedural controls on valve positions, which make significant unplanned level changes unlikely.

REFERENCES

1. Regulatory Guide 1.25, March 23, 1972.
2. DCD Tier 2, Section 15.7.4.
3. NUREG-0800, Section 15.7.4.
4. 10 CFR 100.11.

B 3.9 REFUELING OPERATIONS

B 3.9.7 Residual Heat Removal (RHR) – High Water Level

BASES

BACKGROUND

The purpose of the RHR System in MODE 5 is to remove decay heat and sensible heat from the reactor coolant, as required by GDC 34. Each of the three shutdown cooling loops of the RHR System can provide the required decay heat removal. Each loop consists of one motor driven pump, a heat exchanger, and associated piping and valves. Each loop has a dedicated suction nozzle from the reactor vessel. Each pump discharges the reactor coolant, after it has been cooled by circulation through the respective heat exchangers, to the reactor via feedwater line A for subsystem A, and via the individual RHR low pressure flooder spargers for subsystems B and C. The RHR heat exchangers transfer heat to the Reactor Building Cooling Water (RCW) system (LCO 3.7.3). The RHR shutdown cooling mode is manually controlled.

In addition to the RHR subsystems, the volume of water above the reactor pressure vessel (RPV) flange provides a heat sink for decay heat removal.

APPLICABLE SAFETY ANALYSIS

With the unit in MODE 5, the RHR System is not required to mitigate any events or accidents evaluated in the safety analyses. The RHR System is required for removing decay heat to maintain the temperature of the reactor coolant.

Although the RHR System does not meet a specific criterion of the NRC Policy Statement, it was identified in the NRC Policy Statement as an important contributor to risk reduction. Therefore, the RHR System is retained as a Specification.

LCO

Only one RHR shutdown cooling subsystem is required to be OPERABLE in MODE 5 with the water level ≥ 7.0 m above the RPV flange to provide decay heat removal. Only one subsystem is required because the volume of water above the RPV flange provides backup decay heat removal capability.

An OPERABLE RHR shutdown cooling subsystem consists of an RHR pump, a heat exchanger, valves, piping, instruments, and controls to ensure an OPERABLE flow path.

BASES (continued)

LCO (continued)

Additionally, each RHR shutdown cooling subsystem is considered OPERABLE if it can be manually aligned (remote or local) in the shutdown cooling mode for removal of decay heat. Operation (either continuous or intermittent) of one subsystem can maintain and reduce the reactor coolant temperature as required. However, to ensure adequate core flow to allow for accurate average reactor coolant temperature monitoring, nearly continuous operation is required. A Note is provided to allow a 2 hour exception to shut down the operating subsystem every 8 hours.

APPLICABILITY

One RHR shutdown cooling subsystem is required to be OPERABLE in MODE 5, with irradiated fuel in the reactor pressure vessel and with the water level ≥ 7.0 m above the top of the RPV flange, to provide decay heat removal. RHR System requirements in other MODES are covered by LCOs in Section 3.4, Reactor Coolant System (RCS); Section 3.5, Emergency Core Cooling Systems (ECCS); and Section 3.6, Containment Systems. RHR System requirements in MODE 5, with irradiated fuel in the reactor pressure vessel and with the water level < 7.0 m above the RPV flange, are given in LCO 3.9.8, “Residual Heat Removal (RHR) – Low Water Level.”

ACTIONS

A.1

With no RHR shutdown cooling subsystem OPERABLE, an alternate method of decay heat removal must be established within 1 hour. In this condition, the volume of water above the RPV flange provides adequate capability to remove decay heat from the reactor core. However, the overall reliability is reduced because loss of water level could result in reduced decay heat removal capability. The 1 hour Completion Time is based on the decay heat removal function and the probability of a loss of the available decay heat removal capabilities. Furthermore, verification of the functional availability of these alternate method(s) must be reconfirmed every 24 hours thereafter. This will ensure continued heat removal capability.

Alternate decay heat removal methods are available to the operators for review and preplanning in the unit’s Operating Procedures. For example, in addition to the three RHR shutdown cooling loops, this may include the use of the Fuel Pool Cooling and Cleanup (FPC) System or the Reactor Water Cleanup System, operating with the regenerative heat exchanger bypassed. The method used to remove the decay heat should be the most prudent choice based on unit conditions.

BASES (continued)

ACTIONS (continued)

B.1, B.2, B.3, and B.4

If no RHR shutdown cooling subsystem is OPERABLE and an alternate method of decay heat removal is not available in accordance with Required Action A.1, actions shall be taken immediately to suspend operations involving an increase in reactor decay heat load by suspending the loading of irradiated fuel assemblies into the RPV.

Additional actions are required to minimize any potential fission product release to the environment. This includes initiating immediate action to restore the following to OPERABLE status: secondary containment, one standby gas treatment subsystem, and one secondary containment isolation valve and associated instrumentation in each associated penetration not isolated. This may be performed as an administrative check, by examining logs or other information to determine whether the components are out of service for maintenance or other reasons. It does not mean to perform the surveillances needed to demonstrate the OPERABILITY of the components. If, however, any required component is inoperable, then it must be restored to OPERABLE status. In this case, a surveillance may need to be performed to restore the component to OPERABLE status. Actions must continue until all required components are OPERABLE.

C.1 and C.2

If no RHR Shutdown Cooling System is in operation, an alternate method of coolant circulation is required to be established within 1 hour. The Completion Time is modified such that 1 hour is applicable separately for each occurrence involving a loss of coolant circulation.

During the period when the reactor coolant is being circulated by an alternate method (other than by the required RHR Shutdown Cooling System), the reactor coolant temperature must be periodically monitored to ensure proper functioning of the alternate method. The once per hour Completion Time is deemed appropriate.

BASES

SURVEILLANCE REQUIREMENTS

SR 3.9.7.1

This Surveillance demonstrates that the RHR subsystem is in operation and circulating reactor coolant. The required flow rate is determined by the flow rate necessary to provide sufficient decay heat removal capability. The Frequency of 12 hours is sufficient in view of other visual and audible indications available to the operator for monitoring the RHR subsystem in the control room.

REFERENCES

None.

B 3.9 REFUELING OPERATIONS

B 3.9.8 Residual Heat Removal (RHR) – Low Water Level

BASES

BACKGROUND	The purpose of the RHR System in MODE 5 is to remove decay heat and sensible heat from the reactor coolant, as required by GDC 34. Each of the three shutdown cooling loops of the RHR System can provide the required decay heat removal. Each loop consists of one motor driven pump, a heat exchanger, and associated piping and valves. Each loop has a dedicated suction nozzle from the reactor vessel. Each pump discharges the reactor coolant, after it has been cooled by circulation through the respective heat exchangers, to the reactor via feedwater line A for subsystem A, and via the individual RHR low pressure flooder spargers for subsystems B and C. The RHR heat exchangers transfer heat to the Reactor Building Cooling Water (RCW) system (LCO 3.7.2). The RHR shutdown cooling mode is manually controlled.
APPLICABLE SAFETY ANALYSIS	With the unit in MODE 5, the RHR System is not required to mitigate any events or accidents evaluated in the safety analyses. The RHR System is required for removing decay heat to maintain the temperature of the reactor coolant. Although the RHR System does not meet a specific criterion of the NRC Policy Statement, it was identified in the NRC Policy Statement as an important contributor to risk reduction. Therefore, the RHR System is retained as a Specification.
LCO	In MODE 5 with irradiated fuel in the reactor pressure vessel and with the water level < 7.0 m above the reactor pressure vessel (RPV) flange two RHR shutdown cooling subsystems must be OPERABLE. An OPERABLE RHR shutdown cooling subsystem consists of an RHR pump, a heat exchanger, valves, piping, instruments, and controls to ensure an OPERABLE flow path. Additionally, each RHR shutdown cooling subsystem is considered OPERABLE if it can be manually aligned (remote or local) in the shutdown cooling mode for removal of decay heat. Operation (either continuous or intermittent) of one subsystem can maintain and reduce the reactor coolant temperature as required. However, to ensure adequate core flow to allow for accurate average reactor coolant temperature monitoring, continuous operation is required. A Note is provided to allow a 2 hour exception to shut down the operating subsystem every 8 hours.

BASES

APPLICABILITY

Two RHR shutdown cooling subsystems are required to be OPERABLE in MODE 5, with irradiated fuel in the reactor pressure vessel and with the water level < 7.0 m above the top of the RPV flange, to provide decay heat removal. RHR System requirements in other MODES are covered by LCOs in Section 3.4, Reactor Coolant System (RCS); Section 3.5, Emergency Core Cooling Systems (ECCS); and Section 3.6, Containment Systems. RHR System requirements in MODE 5, with irradiated fuel in the reactor pressure vessel and with the water level ≥ 7.0 m above the RPV flange, are given in LCO 3.9.7, "Residual Heat Removal (RHR) – High Water Level."

ACTIONS

A.1

With one of the two required RHR shutdown cooling subsystems inoperable, the remaining subsystem is capable of providing the required decay heat removal. However, the overall reliability is reduced. Therefore an alternate method of decay heat removal must be provided (such as the third RHR shutdown cooling subsystem). With both required RHR shutdown cooling subsystems inoperable, an alternate method of decay heat removal must be provided in addition to that provided for the initial RHR shutdown cooling subsystem inoperability. This re-establishes backup decay heat removal capabilities, similar to the requirements of the LCO. The 1 hour Completion Time is based on the decay heat removal function and the probability of a loss of the available decay heat removal capabilities. Furthermore, verification of the functional availability of these alternate method(s) must be reconfirmed every 24 hours thereafter. This will ensure continued heat removal capability.

Alternate decay heat removal methods are available to the operators for review and preplanning in the unit's Operating Procedures. For example, in addition to the third RHR shutdown cooling loop, this may include the use of the Fuel Pool Cooling and Cleanup (FPC) System or the Reactor Water Cleanup System, operating with the regenerative heat exchanger bypassed. The method used to remove decay heat should be the most prudent choice based on unit conditions.

B.1, B.2, B.3, C.1, and C.2

If no RHR shutdown cooling subsystem is in operation, an alternate method of coolant circulation is required to be established within 1 hour. The Completion Time is modified such that the 1 hour is applicable separately for each occurrence involving a loss of coolant circulation.

BASES (continued)

ACTIONS (continued)

B.1, B.2, B.3, C.1, and C.2 (continued)

During the period when the reactor coolant is being circulated by an alternate method (other than by the required RHR Shutdown Cooling System), the reactor coolant temperature and level must be periodically monitored to ensure proper function of the alternate method. The once per hour Completion Time is deemed appropriate.

With the required shutdown cooling subsystem(s) inoperable and the required alternate method(s) of decay heat removal not available in accordance with Required Action A.1, additional actions are required to minimize any potential fission product release to the environment. This includes initiating immediate action to restore the following to OPERABLE status: secondary containment, one standby gas treatment subsystem, and one secondary containment isolation valve and associated instrumentation in each associated penetration not isolated. This may be performed as an administrative check, by examining logs or other information to determine whether the components are out of service for maintenance or other reasons. It is not necessary to perform the surveillances needed to demonstrate the OPERABILITY of the components. If, however, any required component is inoperable, then it must be restored to OPERABLE status. In this case, the surveillance may need to be performed to restore the component to OPERABLE status. Actions must continue until all required components are OPERABLE.

SURVEILLANCE REQUIREMENTS

SR 3.9.8.1

This Surveillance demonstrates that one RHR subsystem is in operation and circulating reactor coolant. The required flow rate is determined by the flow rate necessary to provide sufficient decay heat removal capability. The Frequency of 12 hours is sufficient in view of other visual and audible indications available to the operator for monitoring the RHR subsystem in the control room.

REFERENCES

None.

B 3.10 SPECIAL OPERATIONS

B 3.10.1 Inservice Leak and Hydrostatic Testing Operation

BASES

BACKGROUND

The purpose of this Special Operations LCO is to allow certain reactor coolant pressure tests to be performed in MODE 4 when the metallurgical characteristics of the reactor pressure vessel (RPV) require the pressure testing at temperatures > 93°C (normally corresponding to MODE 3).

Inservice testing and system leakage pressure tests required by Section XI of the American Society of Mechanical Engineers (ASME) Boiler and Pressure Vessel Code (Ref. 1) are performed prior to the reactor going critical after a refueling outage. Reactor internal pump operation and a water solid RPV (except for an air bubble for pressure control) are used to achieve the necessary temperatures and pressures required for these tests. The minimum temperatures (at the required pressures) allowed for these tests are determined from the RPV pressure and temperature (P/T) limits required by LCO 3.4.9, “Reactor Coolant System (RCS) Pressure and Temperature (P/T) Limits.” These limits are conservatively based on the fracture toughness of the reactor vessel, taking into account anticipated vessel neutron fluence.

With increased reactor vessel fluence over time, the minimum allowable vessel temperature increases at a given pressure. Periodic updates to the RPV P/T limit curves are performed as necessary, based on the results of analyses of irradiated surveillance specimens removed from the vessel. Hydrostatic and leak testing will eventually be required with minimum reactor coolant temperatures > 93°C.

The hydrostatic test, generally performed every ten years, requires increasing pressure to 110% of operating pressure 7.07 MPaG or 7.78 MPaG, and because of the expected increase in reactor vessel fluence, the minimum allowable vessel temperature according to LCO 3.4.9 is increased as shown in the PLTR. This increase to 110% of operating pressure does not exceed the Safety Limit of 9.48 MPaG.

APPLICABLE SAFETY ANALYSES

Allowing the reactor to be considered in MODE 4 during hydrostatic or leak testing, when the reactor coolant temperature is > 93°C, effectively provides an exception to MODE 3 requirements, including OPERABILITY of primary containment and the full complement of redundant Emergency Core Cooling Systems (ECCS). Since the hydrostatic or leak tests are performed water solid, at low decay heat values, and near MODE 4 conditions, the stored energy in the reactor core will be very low. Under these conditions, the potential for failed fuel and a subsequent increase

BASES (continued)

APPLICABLE SAFETY ANALYSES (continued)

in coolant activity above the limits of LCO 3.4.6, “Reactor Coolant System (RCS) Specific Activity,” are minimized. In addition, the secondary containment will be OPERABLE, in accordance with this Special Operations LCO, and will be capable of handling any airborne radioactivity or steam leaks that could occur during the performance of hydrostatic or leak testing. The consequences of a steam leak under pressure testing conditions, with secondary containment OPERABLE, will be conservatively bounded by the consequences of the postulated main steam line break outside of secondary containment accident analysis described in Reference 2. Therefore, requiring the secondary containment to be OPERABLE will conservatively ensure that any potential airborne radiation from steam leaks will be filtered through the Standby Gas Treatment System, thereby limiting radiation releases to the environment.

In the event of a large primary system leak, the reactor vessel would rapidly depressurize, allowing the low pressure core cooling systems to operate. The capability of the low pressure flooder subsystems, as required in MODE 4 by LCO 3.5.2, “ECCS – Shutdown,” would be more than adequate to keep the core flooded under this low decay heat load condition. Small system leaks would be detected by leakage inspections before significant inventory loss occurred.

For the purposes of this test, the protection provided by normally required MODE 4 applicable LCOs, in addition to the secondary containment requirements required to be met by this Special Operations LCO, will ensure acceptable consequences during normal hydrostatic test conditions and during postulated accident conditions.

As described in LCO 3.0.7, compliance with Special Operations LCOs is optional, and therefore, no criteria of the NRC Policy Statement apply. Special Operations LCOs provide flexibility to perform certain operations by appropriately modifying requirements of other LCOs. A discussion of the criteria satisfied for the other LCOs is provided in their respective Bases.

LCO

As described in LCO 3.0.7, compliance with this Special Operations LCO is optional. Operation at reactor coolant temperatures > 93°C, can be in accordance with Table 1.1-1 for MODE 3 operation without meeting this Special Operations LCO or its ACTIONS. This option may be required due to P/T limits, however, which require testing at temperatures > 93°C, while the ASME inservice test itself requires the safety/relief valves to be gagged, preventing their OPERABILITY.

BASES (continued)

LCO (continued)

If it is desired to perform these tests while complying with this Special Operations LCO, then the MODE 4 applicable LCOs and specified MODE 3 LCOs must be met. This Special Operations LCO allows changing Table 1.1-1 temperature limits for MODE 4 to "NA" and suspending the requirements of LCO 3.4.8, "Residual Heat Removal (RHR) Shutdown Cooling System – Cold Shutdown." The additional requirements for secondary containment LCOs to be met will provide sufficient protection for operations at reactor coolant temperatures > 93°C for the purposes of performing either an inservice leak or hydrostatic test.

This LCO allows primary containment to be open for frequent unobstructed access to perform inspections, and for outage activities on various systems to continue consistent with the MODE 4 applicable requirements that are in effect immediately prior to and immediately after this operation.

APPLICABILITY

The MODE 4 requirements may only be modified for the performance of inservice leak or hydrostatic tests so that these operations can be considered as in MODE 4, even though the reactor coolant temperature is > 93°C. The additional requirement for secondary containment OPERABILITY according to the imposed MODE 3 requirements provides conservatism in the response of the unit to any event that may occur. Operations in all other MODES are unaffected by this LCO.

ACTIONS

A Note has been provided to modify the ACTIONS related to inservice leak and hydrostatic testing operation. Section 1.3, Completion Times, specifies once a Condition has been entered, subsequent trains, subsystems, components, or variables expressed in the Condition discovered to be inoperable or not within limits, will not result in separate entry into the Condition. Section 1.3 also specifies Required Actions of the Condition continue to apply for each additional failure, with Completion Times based on initial entry into the Condition. However, the Required Actions for each requirement of the LCO not met provide appropriate compensatory measures for separate requirements that are not met. As such, a Note has been provided that allows separate Condition entry for each requirement of the LCO.

A.1

If an LCO specified in LCO 3.10.1 is not met, the ACTIONS applicable to the stated requirements shall be entered immediately and complied with. Required Action A.1 has been modified by a Note that clarifies the intent of another LCO's Required Action to be in MODE 4 includes reducing the average reactor coolant temperature to ≤ 93°C.

BASES (continued)

ACTIONS (continued)

A.2.1 and A.2.2

Required Actions A.2.1 and A.2.2 are alternate Required Actions that can be taken instead of Required Action A.1 to restore compliance with the normal MODE 4 requirements, and thereby exit this Special Operations LCO's Applicability. Activities that could further increase reactor coolant temperature or pressure are suspended immediately, in accordance with Required Action A.2.1, and the reactor coolant temperature is reduced to establish normal MODE 4 requirements. The allowed Completion Time of 24 hours for Required Action A.2.2 is based on engineering judgment and provides sufficient time to reduce the average reactor coolant temperature from the highest expected value to ≤ 93°C with normal cooldown procedures. The Completion Time is also consistent with the time provided in LCO 3.0.3 for reaching MODE 4 from MODE 3.

SURVEILLANCE REQUIREMENTS

SR 3.10.1.1

The LCOs made applicable are required to have their Surveillances met to establish that this LCO is being met. A discussion of the applicable SRs is provided in their respective Bases.

REFERENCES

1. American Society of Mechanical Engineers, Boiler and Pressure Vessel Code, Section XI.

2. DCD Tier 2, Section 15.6.4.

B 3.10 SPECIAL OPERATIONS

B 3.10.2 Reactor Mode Switch Interlock Testing

BASES

BACKGROUND

The purpose of this Special Operations LCO is to permit operation of the reactor mode switch from one position to another to confirm certain aspects of associated interlocks during periodic tests and calibrations in MODES 3, 4, and 5.

The reactor mode switch is a conveniently located, multiposition, keylock switch provided to select the necessary scram functions for various plant conditions (Ref. 1). The reactor mode switch selects the appropriate trip logic for scram functions and provides appropriate bypasses. The mode switch positions and related scram interlock functions are summarized as follows:

a. Shutdown – Initiates a reactor scram; selects average power range monitor (APRM) neutron flux setdown, startup range neutron monitor (SRNM) high flux and neutron flux short period scrams; bypasses main steam line isolation turbine control valve fast closure, and turbine stop valve closure scrams;

b. Refuel – Selects APRM neutron flux setdown, SRNM high flux and neutron flux short period scrams; bypasses main steam line isolation turbine control valve fast closure, and turbine stop valve closure scrams;

c. Startup/Hot Standby – Selects; APRM neutron flux setdown, SRNM high flux and neutron flux short period scrams; bypasses main steam line isolation turbine control valve fast closure, and turbine stop valve closure scrams; and

d. Run – Disables all bypasses enabled by the other reactor mode switch positions; bypasses APRM neutron flux setdown and all SRNM scrams; and selects NMS scram function for power range operation.

The reactor mode switch also provides interlocks for such functions as control rod blocks, low CRD charging water header pressure trip bypass, refueling interlocks, and main steam isolation valve isolations.

BASES

APPLICABLE SAFETY ANALYSES

The acceptance criterion for reactor mode switch interlock testing is to prevent fuel failure by precluding reactivity excursions or core criticality.

The interlock functions of the shutdown and refuel positions of the reactor mode switch in MODES 3, 4, and 5 are provided to preclude reactivity excursions that could potentially result in fuel failure. Interlock testing that requires moving the reactor mode switch to other positions (run, or startup/hot standby) while in MODE 3, 4, or 5, requires administratively maintaining all control rods inserted and no other CORE ALTERATIONS in progress. With all control rods inserted in core cells containing one or more fuel assemblies and no CORE ALTERATIONS in progress, there are no credible mechanisms for unacceptable reactivity excursions during the planned interlock testing.

For postulated accidents, such as control rod removal error during refueling or loading of fuel with a control rod withdrawn, the accident analysis demonstrates that fuel failure will not occur (Ref. 2). The withdrawal of a single control rod will not result in criticality when adequate SDM is maintained. Also, loading fuel assemblies into the core with a single control rod withdrawn will not result in criticality, thereby preventing fuel failure.

As described in LCO 3.0.7, compliance with Special Operations LCOs is optional, and therefore no criteria of the NRC Policy Statement apply. Special Operations LCOs provide flexibility to perform certain operations by appropriately modifying requirements of other LCOs. A discussion of the criteria satisfied for the other LCOs is provided in their respective Bases.

LCO

As described in LCO 3.0.7, compliance with this Special Operations LCO is optional. MODES 3, 4, and 5 operations not specified in Table 1.1-1 can be performed in accordance with other Special Operations LCOs (i.e., LCO 3.10.1, “Inservice Leak and Hydrostatic Testing Operation,” LCO 3.10.3, “Rod Withdrawal – Hot Shutdown,” LCO 3.10.4, “Rod Withdrawal – Cold Shutdown,” LCO 3.10.5, “Control Rod Drive (CRD) Removal-Refueling,” LCO 3.10.6, “Multiple Control Rod Withdrawal-Refueling,” LCO 3.10.8, “Shutdown Margin (SDM) Test-Refueling, LCO 3.10.11, “Low Power PHYSICS TEST) and LCO 3.10.12, “Multiple Control Rod Drive Subassembly Removal-Refueling” without meeting this LCO or its ACTIONS. If any testing is performed that involves the reactor mode switch interlocks and requires repositioning beyond that specified in Table 1.1-1 for the current MODE of operation, the testing can be performed, provided all interlock functions potentially defeated are administratively controlled. In MODES 3, 4, and 5 with the reactor mode switch in shutdown as specified in Table 1.1-1, all control rods are fully inserted and a control rod block is initiated. Therefore, all

BASES (continued)

LCO (continued)

control rods in core cells that contain one or more fuel assemblies must be verified fully inserted while in MODES 3, 4, and 5 with the reactor mode switch in other than the shutdown position. The additional LCO requirement to preclude CORE ALTERATIONS is appropriate for MODE 5 operations, as discussed below, and is inherently met in MODES 3 and 4 by the definition of CORE ALTERATIONS, which cannot be performed with the vessel head in place.

In MODE 5, with the reactor mode switch in the refuel position, only one control rod or rod pair can be withdrawn under the refuel position rod-out interlock (LCO 3.9.2, “Refuel Position Rod-Out Interlock”). The refueling equipment interlocks (LCO 3.9.1, “Refueling Equipment Interlocks”) appropriately control other CORE ALTERATIONS. Due to the increased potential for error in controlling these multiple interlocks and the limited duration of tests involving the reactor mode switch position, conservative controls are required, consistent with MODES 3 and 4. The additional controls of administratively not permitting other CORE ALTERATIONS will adequately ensure that the reactor does not become critical during these tests.

APPLICABILITY

Any required periodic interlock testing involving the reactor mode switch, while in MODES 1 and 2, can be performed without the need for Special Operations exceptions. Mode switch manipulations in these MODES would likely result in unit trips. In MODES 3, 4, and 5, this Special Operations LCO is only permitted to be used to allow reactor mode switch interlock testing that cannot conveniently be performed while in other modes. Such interlock testing may consist of required Surveillances or calibrations, or may be the result of maintenance, repair, or troubleshooting activities. In MODES 3, 4, and 5, the interlock functions provided by the reactor mode switch in shutdown (i.e., all control rods inserted and incapable of withdrawal) and refueling (i.e., refueling interlocks to prevent inadvertent criticality during CORE ALTERATIONS) positions can be administratively controlled adequately during the performance of certain tests.

ACTIONS

A.1, A.2, A.3.1, and A.3.2

These Required Actions are provided to restore compliance with the Technical Specifications overridden by this Special Operations LCO. Restoring compliance will also result in exiting the Applicability of this Special Operations LCO.

BASES (continued)

ACTIONS (continued)

A.1, A.2, A.3.1, and A.3.2

All CORE ALTERATIONS, if in progress, are immediately suspended in accordance with Required Action A.1, and all insertable control rods in core cells that contain one or more fuel assemblies are fully inserted within 1 hour, in accordance with Required Action A.2. This will preclude potential mechanisms that could lead to criticality. Suspension of CORE ALTERATIONS shall not preclude the completion of movement of a component to a safe condition. Placing the reactor mode switch in the shutdown position will ensure that all inserted control rods remain inserted and result in operation in accordance with Table 1.1-1. Alternatively, if in MODE 5, the reactor mode switch must be placed in the refuel position, which will also result in operating in accordance with Table 1.1-1. A Note is added to Required Action A.3.2 to indicate that this Required Action is not applicable in MODES 3 and 4, since only the shutdown position is allowed in these MODES. The allowed Completion Time of 1 hour for Required Actions A.2, A.3.1, and A.3.2 provides sufficient time to normally insert the control rods and place the reactor mode switch in the required position, based on operating experience, and is acceptable given that all operations that could increase core reactivity have been suspended.

SURVEILLANCE REQUIREMENTS

SR 3.10.2.1 and SR 3.10.2.2

Meeting the requirements of this Special Operations LCO maintains operation consistent with or conservative to operating with the reactor mode switch in the shutdown position (or the refuel position for MODE 5). The functions of the reactor mode switch interlocks that are not in effect, due to the testing in progress, are adequately compensated for by the Special Operations LCO requirements. The administrative controls are to be periodically verified to ensure that the operational requirements continue to be met. The Surveillances performed at the 12 hour and 24 hour Frequencies are intended to provide appropriate assurance that each operating shift is aware of and verify compliance with these Special Operations LCO requirements.

REFERENCES

1. DCD Tier 2, Section 7.2.1.

2. DCD Tier 2, Section 15.4.1.

B 3.10 SPECIAL OPERATIONS

B 3.10.3 Control Rod Withdrawal – Hot Shutdown

BASES

BACKGROUND

The purpose of this MODE 3 Special Operations LCO is to permit the withdrawal of a single control rod, or control rod pair, for testing while in hot shutdown, by imposing certain restrictions. In MODE 3, the reactor mode switch is in the shutdown position, and all control rods are inserted and blocked from withdrawal. Many systems and functions are not required in these conditions, due to other installed interlocks that are actuated when the reactor mode switch is in the shutdown position. However, circumstances will arise while in MODE 3 that present the need to withdraw a single control rod, or control rod pair, for various tests (e.g., friction tests, scram timing, and coupling integrity checks). These single control rod, or control rod pair, withdrawals are normally accomplished by selecting the refuel position for the reactor mode switch. A control rod pair (those associated by a shared CRD hydraulic control unit) may be withdrawn by utilizing the RCIS scram test mode which “gangs” the two rods together for rod position and control purposes. This Special Operations LCO provides the appropriate additional controls to allow a single control rod, or control rod pair, withdrawal in MODE 3.

APPLICABLE SAFETY ANALYSES

With the reactor mode switch in the refuel position, the analyses for control rod withdrawal during refueling are applicable and, provided the assumptions of these analyses are satisfied in MODE 3, these analyses will bound the consequences of an accident. Explicit safety analyses (Ref. 1) demonstrate that the functioning of the refueling interlocks and adequate SDM will preclude unacceptable reactivity excursions.

Refueling interlocks restrict the movement of control rods to reinforce operational procedures that prevent the reactor from becoming critical. These interlocks prevent the withdrawal of more than one control rod or control rod pair. Under these conditions, the core will always be shut down even with the highest worth control rod pair withdrawn if adequate SDM exists.

Control rod pairs have been established for each control rod drive hydraulic control unit (except for the one rod which has its own accumulator). These pairs are selected and analyzed so that adequate shutdown margin is maintained with any control rod pair fully withdrawn. When the RCIS scram test mode is used and GANG mode is selected for the RCIS, the selected rod pair is substituted for a single rod within the appropriate logic in order to satisfy the refuel mode rod-out interlock. The rod pair may then be withdrawn simultaneously.

BASES

APPLICABLE SAFETY ANALYSES (continued)

The control rod scram function provides backup protection to normal refueling procedures and the refueling interlocks, which prevent inadvertent criticalities during refueling.

Alternate backup protection can be obtained by ensuring that a five by five array of control rods, centered on the withdrawn control rod(s), are inserted and incapable of withdrawal.

As described in LCO 3.0.7, compliance with Special Operations LCOs is optional, and therefore, no criteria of the NRC Policy Statement apply. Special Operations LCOs provide flexibility to perform certain operations by appropriately modifying requirements of other LCOs. A discussion of the criteria satisfied for the other LCOs is provided in their respective Bases.

LCO

As described in LCO 3.0.7, compliance with this Special Operations LCO is optional. Operation in MODE 3 with the reactor mode switch in the refuel position can be performed in accordance with other Special Operations LCO (i.e., LCO 3.10.2, “Reactor Mode Switch Interlock Testing”) without meeting this Special Operations LCO or its ACTIONS. However, if a single control rod, or control rod pair, withdrawal is desired in MODE 3, controls consistent with those required during refueling must be implemented and this Special Operations LCO applied. The refueling interlocks of LCO 3.9.2, “Refuel Position Rod-Out Interlock,” required by this Special Operations LCO, will ensure that only one control rod, or control rod pair, can be withdrawn.

To back up the refueling interlocks (LCO 3.9.2), the ability to scram the withdrawn control rods in the event of an inadvertent criticality is provided by this Special Operations LCO’s requirements in Item d.1. Alternately, provided a sufficient number of control rods(s) in the vicinity of the withdrawn control rod(s) are known to be inserted and incapable of withdrawal, the possibility of criticality on withdrawal of the control rod(s) is sufficiently precluded, so as not to require the scram capability of the withdrawn control rod(s).

APPLICABILITY

Control rod withdrawals are adequately controlled in MODES 1, 2, and 5 by existing LCOs. In MODES 3 and 4, control rod withdrawal is only allowed if performed in accordance with this Special Operations LCO or Special Operations LCO 3.10.4, and if limited to one control rod, or control rod pair. This allowance is only provided with the reactor mode switch in the refuel position. For these conditions, the rod-out interlock (LCO 3.9.2), control rod position indication (LCO 3.9.4, “Control Rod

BASES

APPLICABILITY (continued)

Position Indication") full insertion requirements for all other control rods and scram functions (LCO 3.3.1.1, "SSLC Sensor Instrumentation," LCO 3.3.1.2, "Reactor Protection System (RPS) and MSIV Trip Actuation Logic," and LCO 3.9.5, "Control Rod OPERABILITY – Refueling"), or the added administrative control in Item d.2 of this Special Operations LCO, minimizes potential reactivity excursions.

ACTIONS

A Note has been provided to modify the ACTIONS related to a single or dual control rod withdrawal while in MODE 3. Section 1.3, Completion Times, specifies once a Condition has been entered, subsequent trains, subsystems, components, or variables expressed in the Condition discovered to be inoperable or not within limits, will not result in separate entry into the Condition. Section 1.3 also specifies Required Actions of the Condition continue to apply for each additional failure, with Completion Times based on initial entry into the Condition. However, the Required Actions for each requirement of the LCO not met provide appropriate compensatory measures for separate requirements that are not met. As such, a Note has been provided that allows separate Condition entry for each requirement of the LCO.

A.1

If one or more of the requirements specified in this Special Operations LCO are not met, the ACTIONS applicable to the stated requirements of the affected LCOs are immediately entered as directed by Required Action A.1. This Required Action has been modified by a Note that clarifies the intent of any other LCO's Required Actions, in accordance with the other applicable LCOs, to insert all control rods and to also require exiting this Special Operations Applicability LCO by returning the reactor mode switch to the shutdown position. A second Note has been added, which clarifies that this Required Action is only applicable if the requirements not met are for an affected LCO.

A.2.1 and A.2.2

Required Actions A.2.1 and A.2.2 are alternative Required Actions that can be taken instead of Required Action A.1 to restore compliance with the normal MODE 3 requirements, thereby exiting this Special Operations LCO's Applicability. Actions must be initiated immediately to insert all insertable control rods. Actions must continue until all such control rods are fully inserted. Placing the reactor mode switch in the shutdown position will ensure that all inserted rods remain inserted and restore

BASES

ACTIONS (continued)

A.2.1 and A.2.2 (continued)

operation in accordance with Table 1.1-1. The allowed Completion Time of 1 hour to place the reactor mode switch in the shutdown position provides sufficient time to normally insert the control rods.

SURVEILLANCE REQUIREMENTS

SR 3.10.3.1, SR 3.10.3.2, and SR 3.10.3.3

The other LCOs made applicable in this Special Operations LCO are required to have their Surveillances met to establish that this Special Operations LCO is being met. If the local array of control rods is inserted and disarmed while the scram function for the withdrawn rod(s) is not available, periodic verification in accordance with SR 3.10.3.2 is required to preclude the possibility of criticality. SR 3.10.3.2 has been modified by a Note, which clarifies that this SR is not required to be met if SR 3.10.3.1 is satisfied for LCO 3.10.3.d.1 requirements, since SR 3.10.3.2 demonstrates that the alternative LCO 3.10.3.d.2 requirements are satisfied. Also, SR 3.10.3.3 verifies that all control rods other than the control rod(s) being withdrawn are fully inserted. The 24 hour Frequency is acceptable because of the administrative controls on control rod withdrawals, the protection afforded by the LCOs involved, and hardware interlocks that preclude additional control rod withdrawals.

REFERENCES

1. DCD Tier 2, Section 15.4.1.

B 3.10 SPECIAL OPERATIONS

B 3.10.4 Control Rod Withdrawal – Cold Shutdown

BASES

BACKGROUND

The purpose of this MODE 4 Special Operations LCO is to permit the withdrawal of a single control rod, or control rod pair, for testing or maintenance, while in cold shutdown, by imposing certain restrictions. In MODE 4, the reactor mode switch is in the shutdown position, and all control rods are inserted and blocked from withdrawal. Many systems and functions are not required in these conditions, due to the installed interlocks associated with the reactor mode switch in the shutdown position. Circumstances will arise while in MODE 4, however, that present the need to withdraw a single control rod, or control rod pair, for various tests (e.g., friction tests, scram time testing, and coupling integrity checks). Certain situations may also require the removal of the associated control rod drives (CRD). These single or dual control rod withdrawals and possible subsequent removals are normally accomplished by selecting the refuel position for the reactor mode switch. A control rod pair (those associated by a single CRD hydraulic control unit) may be withdrawn by utilizing the RCIS scram test mode, which “gangs” the two rods together for rod position and control purposes.

APPLICABLE SAFETY ANALYSES

With the reactor mode switch in the refuel position, the analyses for control rod withdrawal during refueling are applicable and, provided the assumptions of these analyses are satisfied in MODE 4, these analyses will bound the consequences of an accident. Explicit safety analyses (Ref. 1) demonstrate that the functioning of the refueling interlocks and adequate SDM will preclude unacceptable reactivity excursions.

Refueling interlocks restrict the movement of control rods to reinforce operational procedures that prevent the reactor from becoming critical. These interlocks prevent the withdrawal of more than one control rod, or control rod pair. Under these conditions, the core will always be shut down even with the highest worth control rod pair withdrawn if adequate SDM exists.

Control rod pairs have been established for each control rod drive hydraulic control unit (except for the one rod which has its own accumulator). These pairs are selected and analyzed so that adequate shutdown margin is maintained with any control rod pair fully withdrawn. When the RCIS scram test mode is used and GANG mode is selected for the RCIS, the selected rod pair is substituted for a single rod within the appropriate logic in order to satisfy the refuel mode rod-out interlock. The rod pair may then be withdrawn simultaneously.

BASES

APPLICABLE SAFETY ANALYSES (continued)

The control rod scram function provides backup protection to normal refueling procedures and the refueling interlocks, which prevent inadvertent criticalities during refueling. Alternate backup protection can be obtained by ensuring that a five by five array of control rods, centered on the withdrawn control rod(s), are inserted and incapable of withdrawal. This alternate backup protection is required when removing the CRDs because this removal renders the withdrawn control rod(s) incapable of being scrammed.

As described in LCO 3.0.7, compliance with Special Operations LCOs is optional, and therefore, no criteria of the NRC Policy Statement apply. Special Operations LCOs provide flexibility to perform certain operations by appropriately modifying requirements of other LCOs. A discussion of the criteria satisfied for the other LCOs is provided in their respective Bases.

LCO

As described in LCO 3.0.7, compliance with this Special Operations LCO is optional. Operation in MODE 4 with the reactor mode switch in the refuel position can be performed in accordance with other LCOs (i.e., Special Operations LCO 3.10.2, “Reactor Mode Switch Interlock Testing”) without meeting this Special Operations LCO or its ACTIONS. If a single control rod, or control rod pair, withdrawal is desired in MODE 4, controls consistent with those required during refueling must be implemented and this Special Operations LCO applied.

The refueling interlocks of LCO 3.9.2, “Refuel Position Rod-Out Interlock,” required by this Special Operations LCO 3.10.4 will ensure that only one control rod, or control rod pair, can be withdrawn. At the time CRD removal begins, the disconnection of the position indication probe will cause LCO 3.9.4, “Control Rod Position Indication,” and therefore, LCO 3.9.2 to fail to be met. At this time, a control rod withdrawal block will be inserted to ensure that no additional control rods can be withdrawn and that compliance with this Special Operations LCO is maintained.

To back up the refueling interlocks (LCO 3.9.2) or the control rod withdrawal block, the ability to scram the withdrawn control rod(s) in the event of an inadvertent criticality is provided by this Special Operations LCO’s requirements in Item c.1. Alternatively, when the scram function is not OPERABLE, or the CRD is to be removed, a sufficient number of rods in the vicinity of the withdrawn control rod(s) are required to be inserted and made incapable of withdrawal. This precludes the possibility of criticality upon withdrawal of this control rod.

BASES

APPLICABILITY

Control rod withdrawals are adequately controlled in MODES 1, 2, and 5 by existing LCOs. In MODES 3 and 4, control rod withdrawal is only allowed if performed in accordance with Special Operations LCO 3.10.3, or this Special Operations LCO, and if limited to one control rod, or control rod pair. This allowance is only provided with the reactor mode switch in the refuel position.

During these conditions, the full insertion requirements for all other control rods, the rod-out interlock (LCO 3.9.2), control rod position indication (LCO 3.9.4), and scram functions (LCO 3.3.1.1, "SSLC Sensor Instrumentation," LCO 3.3.1.2, "Reactor Protection System (RPS) and MSIV Trip Actuation," and LCO 3.9.5, "Control Rod OPERABILITY – Refueling"), or the added administrative controls in Item b.2 and Item c.2 of this Special Operations LCO, provide mitigation of potential reactivity excursions.

ACTIONS

A Note has been provided to modify the ACTIONS related to a single or dual control rod withdrawal while in MODE 3. Section 1.3, Completion Times, specifies once a Condition has been entered, subsequent trains, subsystems, components, or variables expressed in the Condition discovered to be inoperable or not within limits, will not result in separate entry into the Condition. Section 1.3 also specifies Required Actions of the Condition continue to apply for each additional failure, with Completion Times based on initial entry into the Condition. However, the Required Actions for each requirement of the LCO not met provide appropriate compensatory measures for separate requirements that are not met. As such, a Note has been provided that allows separate Condition entry for each requirement of the LCO.

A.1, A.2.1, and A.2.2

If one or more of the requirements of this Special Operations LCO are not met with the affected control rod insertable, these Required Actions restore operation consistent with normal MODE 4 conditions (i.e., all rods inserted) or with the exceptions allowed in this Special Operations LCO. Required Action A.1 has been modified by a Note that clarifies that the intent of any other LCO Required Actions, in accordance with the other applicable LCOs, to insert all control rods includes exiting this Special Operations Applicability LCO by returning the reactor mode switch to the shutdown position. A second Note has been added to Required Action A.1 to clarify that this Required Action is only applicable if the requirements not met are for an affected LCO.

Required Actions A.2.1 and A.2.2 are specified, based on the assumption of the control rod(s) being withdrawn. If a control rod is still insertable,

BASES

ACTIONS (continued)

A.1, A.2.1, and A.2.2 (continued)

actions must be immediately initiated to fully insert all insertable control rods and within 1 hour place the reactor mode switch in the shutdown position. Action must continue until all such control rods are fully inserted. The allowed Completion Time of 1 hour for placing the reactor mode switch in the shutdown position provides sufficient time to normally insert the control rods.

B.1, B.2.1, and B.2.2

If one or more of the requirements of this Special Operations LCO are not met with the affected control rod(s) not insertable, withdrawal of the control rod and removal of the associated CRD must immediately be suspended. If the CRD has been removed, such that the control rod is not insertable, the Required Actions require the most expeditious action be taken to either initiate action to restore the CRD and insert its control rod, or restore compliance with this Special Operations LCO.

SURVEILLANCE REQUIREMENTS

SR 3.10.4.1, SR 3.10.4.2, SR 3.10.4.3, and SR 3.10.4.4

The other LCOs made applicable by this Special Operations LCO are required to have their associated Surveillances met to establish that this Special Operations LCO is being met. If the local array of control rods is inserted and disarmed while the scram function for the withdrawn rod is not available, periodic verification is required to ensure that the possibility of criticality remains precluded. Also, all the control rods are verified to be inserted, as well as the control rod withdrawal block. Verification that all the other control rods are fully inserted is required to meet the SDM requirements. Verification that a control rod withdrawal block has been inserted ensures that no other control rods can be inadvertently withdrawn under conditions when position indication instrumentation is inoperable for the affected control rod. The 24 hour Frequency is acceptable because of the administrative controls on control rod withdrawals, the protection afforded by the LCOs involved, and hardware interlocks to preclude an additional control rod withdrawal.

SR 3.10.4.2 and SR 3.10.4.4 have been modified by Notes, which clarify that these SRs are not required to be met if the alternative requirements demonstrated by SR 3.10.4.1 are satisfied.

REFERENCES

1. DCD Tier 2, Section 15.4.1.

B 3.10 SPECIAL OPERATIONS

B 3.10.5 Control Rod Drive (CRD) Removal – Refueling

BASES

BACKGROUND

The purpose of this MODE 5 Special Operations LCO is to permit the removal of a CRD during refueling operations by imposing certain administrative controls. Refueling interlocks restrict the movement of control rods and the operation of the refueling equipment to reinforce operational procedures that prevent the reactor from becoming critical during refueling operations. During refueling operations, no more than one control rod, or control pair, is permitted to be withdrawn from a core cell containing one or more fuel assemblies. The refueling interlocks use the “full in” position indicators to determine the position of all control rods. If the “full in” position signal is not present for every control rod, then the all rods in permissive for the refueling equipment interlocks is not present and fuel loading is prevented. Also, the refuel position rod-out interlock will not allow the withdrawal of a second control rod. A control rod drive pair (those associated by a shared CRD hydraulic control unit) may be removed under the control of the rod-out interlock by utilizing the RCIS scram test mode. This switch allows the CRD pair to be treated as one CRD for purposes of the rod-out interlock.

The control rod scram function provides backup protection to normal refueling procedures as do the refueling interlocks described above, which prevent inadvertent criticalities during refueling. The requirement for this function to be OPERABLE precludes the possibility of removing the CRD once a control rod is withdrawn from a core cell containing one or more fuel assemblies. This Special Operations LCO provides controls sufficient to ensure the possibility of an inadvertent criticality is precluded, while allowing a single CRD, or control rod pair, to be removed from core cell(s) containing one or more fuel assemblies. The removal of the CRD involves disconnecting the position indication probe, which causes noncompliance with LCO 3.9.4, “Control Rod Position Indication,” and, therefore, LCO 3.9.1, “Refueling Equipment Interlocks,” and LCO 3.9.2, “Refueling Position Rod-Out Interlock.” The CRD removal also requires isolation of the CRD from the CRD Hydraulic System, thereby causing inoperability of the control rod (LCO 3.9.5, “Control Rod OPERABILITY – Refueling”).

APPLICABLE SAFETY ANALYSES

With the reactor mode switch in the refuel position, the analyses for control rod withdrawal during refueling are applicable and, provided the assumptions of these analyses are satisfied, these analyses will bound the consequences of accidents. Explicit safety analyses (Ref. 1) demonstrate that the proper operation of the refueling interlocks and adequate SDM will preclude unacceptable reactivity excursions.

BASES

APPLICABLE SAFETY ANALYSES (continued)

Control rod pairs have been established for each control rod drive hydraulic control unit (except for the center rod which has its own accumulator). These pairs are selected and analyzed so that adequate shutdown margin is maintained with any control rod pair fully withdrawn. When the RCIS scram test mode is used, the selected rod pair is substituted for a single rod within the appropriate logic in order to satisfy the refuel mode rod-out interlock. The rod pair may then be withdrawn simultaneously.

Refueling interlocks restrict the movement of control rods and the operation of the refueling equipment to reinforce operational procedures that prevent the reactor from becoming critical. These interlocks prevent the withdrawal of more than one control rod, or control rod pair. Under these conditions, the core will always be shut down even with the highest worth control rod pair withdrawn if adequate SDM exists. By requiring all other control rods to be inserted and a control rod withdrawal block initiated, the function of the inoperable rod-out interlock (LCO 3.9.2) is adequately maintained. This Special Operations LCO requirement to suspend all CORE ALTERATIONS adequately compensates for the inoperable all rods in permissive for the refueling equipment interlocks (LCO 3.9.1).

The control rod scram function provides backup protection to normal refueling procedures and the refueling interlocks, which prevent inadvertent criticalities during refueling. Since the scram function and refueling interlocks may be suspended, alternate backup protection required by this Special Operations LCO is obtained by ensuring that a five by five array of control rods, centered on the withdrawn control rod, are inserted and are incapable of being withdrawn (by insertion of a control rod block).

As described in LCO 3.0.7, compliance with Special Operations LCOs is optional, and therefore, no criteria of the NRC Policy Statement apply. Special Operations LCOs provide flexibility to perform certain operations by appropriately modifying requirements of other LCOs. A discussion of the criteria satisfied for the other LCOs is provided in their respective Bases.

LCO

As described in LCO 3.0.7, compliance with this Special Operations LCO is optional. Operation in MODE 5 with any of the following LCOs – LCO 3.3.1.1, “SSLC Instrumentation,” LCO 3.3.1.2, “Reactor Protection System (RPS) and MSIV Actuation Logic,” LCO 3.3.8.1, “Electric Power Monitoring,” LCO 3.9.1, LCO 3.9.2, LCO 3.9.4, or LCO 3.9.5 - not met can be performed in accordance with the Required Actions of these LCOs without meeting this Special Operations LCO or its

BASES

LCO (continued)

ACTIONS. However, if a single CRD or CRD drive pair removal from a core cell containing one or more fuel assemblies is desired in MODE 5, controls consistent with those required by LCO 3.3.1.1, LCO 3.3.1.2, LCO 3.3.8.1, LCO 3.9.1, LCO 3.9.2, LCO 3.9.4, and LCO 3.9.5 must be implemented and this Special Operations LCO applied.

By requiring all other control rods to be inserted and a control rod withdrawal block initiated, the function of the inoperable rod-out interlock (LCO 3.9.2) is adequately maintained. This Special Operations LCO requirement to suspend all CORE ALTERATIONS adequately compensates for the inoperable all rods in permissive for the refueling equipment interlocks (LCO 3.9.1). Ensuring that the five by five array of control rods, centered on the withdrawn control rod, are inserted and incapable of withdrawal adequately satisfies the backup protection that LCO 3.3.1.1, LCO 3.3.1.2 and LCO 3.9.2 would have otherwise provided.

The exception granted in this Special Operations LCO to assume that the withdrawn control rod, or control rod pair, is the highest worth control rod pair to satisfy LCO 3.1.1, “SHUTDOWN MARGIN (SDM),” and the inability to withdraw another control rod during this operation without additional SDM demonstrations, is conservative (i.e., the withdrawn control rod pair may not be the highest worth control rod pair).

APPLICABILITY

Operation in MODE 5 is controlled by existing LCOs. The allowance to comply with this Special Operations LCO in lieu of the ACTIONS of LCO 3.3.1.1, LCO 3.3.1.2, LCO 3.3.8.1, LCO 3.9.1, LCO 3.9.2, LCO 3.9.4, and LCO 3.9.5 is appropriately controlled with the additional administrative controls required by this Special Operations LCO, which reduces the potential for reactivity excursions.

ACTIONS

A.1, A.2.1, and A.2.2

If one or more of the requirements of this Special Operations LCO are not met, the immediate implementation of these Required Actions restores operation consistent with the normal requirements for failure to meet LCO 3.3.1.1, LCO 3.3.1.2, LCO 3.9.1, LCO 3.9.2, LCO 3.9.4, and LCO 3.9.5 (i.e., all control rods inserted) or with the allowances of this Special Operations LCO. The Completion Times for Required Action A.1, Required Action A.2.1, and Required Action A.2.2 are intended to require these Required Actions be implemented in a very short time and carried through in an expeditious manner to either initiate action to restore the CRD and insert its control rod, or initiate action to restore compliance with this Special Operations LCO. Actions must continue until either Required Action A.2.1 or Required Action A.2.2 is satisfied.

BASES

SURVEILLANCE REQUIREMENTS

SR 3.10.5.1, SR 3.10.5.2, SR 3.10.5.3, SR 3.10.5.4, and SR 3.10.5.5

Verification that all the control rods, other than the control rod withdrawn for the removal of the associated CRD, are fully inserted is required to ensure the SDM is within limits. Verification that the local five by five array of control rods other than the control rod withdrawn for the removal of the associated CRD, is inserted and disarmed, while the scram function for the withdrawn rod is not available, is required to ensure that the possibility of criticality remains precluded. Verification that a control rod withdrawal block has been inserted ensures that no other control rods can be inadvertently withdrawn under conditions when position indication instrumentation is inoperable for the withdrawn control rod. The Surveillance for LCO 3.1.1, which is made applicable by this Special Operations LCO, is required in order to establish that this Special Operations LCO is being met. Verification that no other CORE ALTERATIONS are being made is required to ensure the assumptions of the safety analysis are satisfied.

Periodic verification of the administrative controls established by this Special Operations LCO is prudent to preclude the possibility of an inadvertent criticality. The 24 hour Frequency is acceptable, given the administrative controls on control rod removal and hardware interlocks to block an additional control rod withdrawal.

REFERENCES

1. DCD Tier 2, Section 15.4.1.

B 3.10 SPECIAL OPERATIONS

B 3.10.6 Multiple Control Rod Withdrawal – Refueling

BASES

BACKGROUND

The purpose of this MODE 5 Special Operations LCO is to permit multiple control rod withdrawal during refueling by imposing certain administrative controls.

Refueling interlocks restrict the movement of control rods and the operation of the refueling equipment to reinforce operational procedures that prevent the reactor from becoming critical during refueling operations. During refueling operations, no more than one control rod, or control rod pair, is permitted to be withdrawn from a core cell containing one or more fuel assemblies. When all four fuel assemblies are removed from a cell, the control rods may be withdrawn with no restrictions. Any number of control rods may be withdrawn and removed from the reactor vessel if their cells contain no fuel.

The refueling interlocks use the “full in” position indicators to determine the position of all control rods. If the “full in” position signal is not present for every control rod, then the all rods in permissive for the refueling equipment interlocks is not present and fuel loading is prevented. Also, the refuel position rod-out interlock will not allow the withdrawal of additional control rod(s).

To allow more than one control rod, or control rod pair, to be withdrawn during refueling, these interlocks must be defeated. This Special Operations LCO establishes the necessary administrative controls to allow bypass of the “full in” position indicators.

APPLICABLE SAFETY ANALYSES

Explicit safety analyses (Ref. 1) demonstrate that the functioning of the refueling interlocks and adequate SDM will prevent unacceptable reactivity excursions during refueling. To allow multiple control rod withdrawals (e.g. more than one control rod or control rod pair), control rod removals, associated control rod drive (CRD) removal, or any combination of these, the “full in” position indication is allowed to be bypassed for each withdrawn control rod if all fuel has been removed from the cell. With no fuel assemblies in the core cell, the associated control rod has no reactivity control function and is not required to remain inserted. Prior to reloading fuel into the cell, however, the associated control rod must be inserted to ensure that an inadvertent criticality does not occur, as evaluated in the Reference 1 analysis.

BASES

APPLICABLE SAFETY ANALYSES (continued)

As described in LCO 3.0.7, compliance with Special Operations LCOs is optional, and therefore, no criteria of the NRC Policy Statement apply. Special Operations LCOs provide flexibility to perform certain operations by appropriately modifying requirements of other LCOs. A discussion of the criteria satisfied for the other LCOs is provided in their respective Bases.

LCO

As described in LCO 3.0.7, compliance with this Special Operations LCO is optional. Operation in MODE 5 with LCO 3.9.3, “Control Rod Position,” LCO 3.9.4, “Control Rod Position Indication,” or LCO 3.9.5, “Control Rod OPERABILITY – Refueling,” not met, can be performed in accordance with the Required Actions of these LCOs without meeting this Special Operations LCO or its ACTIONS. If multiple control rod withdrawal or removal, or CRD removal is desired, all four fuel assemblies are required to be removed from the associated cells. Prior to entering this LCO, any fuel remaining in a cell whose control rod was previously removed under the provisions of another LCO must be removed.

When loading fuel into the core with multiple control rods withdrawn, special spiral reload sequences are used to ensure that reactivity additions are minimized. Otherwise, all control rods must be fully inserted before loading fuel.

APPLICABILITY

Operation in MODE 5 is controlled by existing LCOs. The exceptions from other LCO requirements (e.g., the ACTIONS of LCO 3.9.3, LCO 3.9.4 or LCO 3.9.5) allowed by this Special Operations LCO are appropriately controlled by requiring all fuel to be removed from cells whose “full in” indicators are allowed to be bypassed.

ACTIONS

A.1, A.2.1, and A.2.2

If one or more of the requirements of this Special Operations LCO are not met, the immediate implementation of these Required Actions restores operation consistent with the normal requirements for refueling (i.e., all control rods inserted in core cells containing one or more fuel assemblies) or with the exceptions granted by this Special Operations LCO. The Completion Times for Required Action A.1, Required Action A.2.1, and Required Action A.2.2 are intended to require that these Required Actions be implemented in a very short time and carried through in an expeditious manner to either initiate action to restore the affected CRDs and insert their control rods, or initiate action to restore compliance with this Special Operations LCO.

BASES

SURVEILLANCE REQUIREMENTS

SR 3.10.6.1, SR 3.10.6.2, and SR 3.10.6.3

Periodic verification of the administrative controls established by this Special Operations LCO is prudent to preclude the possibility of an inadvertent criticality. The 24 hour Frequency is acceptable, given the administrative controls on fuel assembly and control rod removal, and takes into account other indications of control rod status available in the control room.

REFERENCES

1. DCD Tier 2, Section 15.4.1.

B 3.10 SPECIAL OPERATIONS

B 3.10.7 Control Rod Testing – Operating

BASES

BACKGROUND

The purpose of this Special Operations LCO is to permit control rod testing, while in MODES 1 and 2, by imposing certain administrative controls. Control rod patterns during startup conditions are controlled by the operator and the rod worth minimizer (RWM) (LCO 3.3.5.1, "Control Rod Block Instrumentation"), such that only the specified control rod sequences and relative positions required by LCO 3.1.6, "Rod Pattern Control," are allowed over the operating range from all control rods inserted to the low power setpoint (LPSP) of the RWM. The sequences effectively limit the potential amount and rate of reactivity increase that could occur during a rod withdrawal error (RWE). During these conditions, control rod testing is sometimes required that may result in control rod patterns not in compliance with the prescribed sequences of LCO 3.1.6. These tests may include SDM demonstrations, control rod scram time testing, control rod friction testing, and testing performed during the Startup Test Program. This Special Operations LCO provides the necessary exceptions to the requirements of LCO 3.1.6 and provides additional administrative controls to allow the deviations in such tests from the prescribed sequences in LCO 3.1.6.

APPLICABLE SAFETY ANALYSES

The analytical methods and assumptions used in evaluating the RWE are summarized in References 1 and 2. RWE analyses assume the reactor operator follows prescribed withdrawal sequences. These sequences define the potential initial conditions for the RWE analyses. The RWM provides backup to operator control of the withdrawal sequences to ensure that the initial conditions of the RWE analyses are not violated. For special sequences developed for control rod testing, the initial control rod patterns assumed in the safety analyses of References 1 and 2 may not be preserved. Therefore, special RWE analyses are required to demonstrate that these special sequences will not result in unacceptable consequences, should a RWE occur during the testing. These analyses, performed in accordance with an NRC approved methodology, are dependent on the specific test being performed.

As described in LCO 3.0.7, compliance with Special Operations LCOs is optional, and therefore, no criteria of the NRC Policy Statement apply. Special Operations LCOs provide flexibility to perform certain operations by appropriately modifying requirements of other LCOs. A discussion of the criteria satisfied for the other LCOs is provided in their respective Bases.

BASES

LCO

As described in LCO 3.0.7, compliance with this Special Operations LCO is optional. Control rod testing may be performed in compliance with the prescribed sequences of LCO 3.1.6, and during these tests, no exceptions to the requirements of LCO 3.1.6 are necessary. For testing performed with a sequence not in compliance with LCO 3.1.6, the requirements of LCO 3.1.6 may be suspended, provided additional administrative controls are placed on the test to ensure that the assumptions of the special safety analysis for the test sequence remain valid. When deviating from the prescribed sequences of LCO 3.1.6, the approved control rod sequence must be enforced by the RWM (LCO 3.3.5.1 Function 1b); or assurance that the test sequence is followed can be provided by a second licensed operator or other qualified member of the technical staff verifying conformance to the approved test sequence.

APPLICABILITY

Control rod testing, while in MODES 1 and 2 with THERMAL POWER greater than the LPSP of the RWM, is adequately controlled by the existing LCOs on power distribution limits and control rod block instrumentation. Control rod movement during these conditions is not restricted to prescribed sequences and can be performed within the constraints of LCO 3.2.1, “AVERAGE PLANAR LINEAR HEAT GENERATION RATE (APLHGR),” LCO 3.2.2, “MINIMUM CRITICAL POWER RATIO (MCPR),” LCO 3.2.3, “LINEAR HEAT GENERATION RATE (LHGR),” and LCO 3.3.5.1. With THERMAL POWER less than or equal to the LPSP of the RWM, the provisions of this Special Operations LCO are necessary to perform special tests that are not in conformance with the prescribed control rod sequences of LCO 3.1.6. While in MODES 3 and 4, control rod withdrawal is only allowed if performed in accordance with Special Operations LCO 3.10.3, “Control Rod Withdrawal – Hot Shutdown” or Special Operations LCO 3.10.4, “Control Rod Withdrawal – Cold Shutdown,” which provide adequate controls to ensure that the assumptions of the safety analyses of Reference 1 and 2 are satisfied. During these Special Operations and while in MODE 5, the rod-out interlock (LCO 3.9.2, “Refuel Position Rod-Out Interlock”) and scram functions (LCO 3.3.1.1, “SSLC Sensor Instrumentation,” LCO 3.3.1.2, “Reactor Protection System (RPS) and MSIV Trip Actuation Logic,” and LCO 3.9.5, “Control Rod OPERABILITY – Refueling”), or the added administrative controls prescribed in the applicable Special Operations LCOs, minimize potential reactivity excursions.

BASES

ACTIONS

A.1

With the requirements of the LCO not met (e.g., the control rod pattern not in compliance with the special test sequence), the testing is required to be immediately suspended. Upon suspension of the special test, the provisions of LCO 3.1.6 are no longer excepted, and appropriate actions are to be taken either to restore the control rod sequence to the prescribed sequence of LCO 3.1.6, or to shut down the reactor, if required by LCO 3.1.6.

SURVEILLANCE REQUIREMENTS

SR 3.10.7.1 and SR 3.10.7.2

The control rod withdrawal sequences during the special tests may be enforced by the RWM (LCO 3.3.5.1, Function 1.b, MODE 1 or 2 requirements, as applicable) or by a second licensed operator or other qualified member of the technical staff. As noted, either the applicable SRs for the RWM (LCO 3.3.5.1) must be satisfied according to the applicable Frequency (SR 3.10.7.1 and SR 3.10.7.2), or the proper movement of control rods must be verified. This latter verification (i.e., SR 3.10.7.1) must be performed during control rod movement to prevent deviations from the specified sequence. Either of these surveillances provides adequate assurance that the specified test sequence is being followed.

REFERENCES

1. NEDE-24011-P-A-US, General Electric Standard Application for Reactor Fuel, Supplement for United States (as amended).

2. DCD Tier 2, Section 15.4.1.

B 3.10 SPECIAL OPERATIONS

B 3.10.8 SHUTDOWN MARGIN (SDM) Test – Refueling

BASES

BACKGROUND

The purpose of this MODE 5 Special Operations LCO is to permit SDM testing to be performed for those plant configurations in which the reactor pressure vessel (RPV) head is either not in place or the head bolts are not fully tensioned.

LCO 3.1.1, "SHUTDOWN MARGIN (SDM)," requires that adequate SDM be demonstrated following fuel movements or control rod replacement within the RPV. The demonstration must be performed prior to or within 4 hours after criticality is reached. This SDM test may be performed prior to or during the first startup following refueling. Performing the SDM test prior to startup requires the test to be performed while in MODE 5 with the vessel head bolts less than fully tensioned (and possibly with the vessel head removed). While in MODE 5, the reactor mode switch is required to be in the shutdown or refuel position, where the applicable control rod blocks ensure that the reactor will not become critical. The SDM test requires the reactor mode switch to be in the startup or hot standby position, since more than one control rod will be withdrawn for the purpose of demonstrating adequate SDM. This Special Operations LCO provides the appropriate additional controls to allow withdrawing more than one control rod from a core cell containing one or more fuel assemblies when the reactor vessel head bolts are less than fully tensioned.

APPLICABLE SAFETY ANALYSES

Prevention and mitigation of unacceptable reactivity excursions during control rod withdrawal, with the reactor mode switch in the startup or hot standby position while in MODE 5, is provided by the Startup Range Neutron Monitor (SRNM) neutron flux scram (LCO 3.3.1.1, "SSLC Sensor Instrumentation"), average power range monitor (APRM) neutron flux scram (LCO 3.3.1.1), and control rod block instrumentation (LCO 3.3.5.1, "Control Rod Block Instrumentation"). The limiting reactivity excursion during startup conditions while in MODE 5 is the rod Withdrawal Error (RWE).

RWE analyses assume that the reactor operator follows prescribed withdrawal sequences. For SDM tests performed within these defined sequences, the analyses of References 1 and 2 are applicable. However, for some sequences developed for the SDM testing, the control rod patterns assumed in the safety analyses of References 1 and 2 may not be met. Therefore, special RWE analyses, performed in accordance with

BASES

APPLICABLE SAFETY ANALYSES (continued)

an NRC approved methodology, are required to demonstrate that the SDM test sequence will not result in unacceptable consequences should a RWE occur during the testing. For the purpose of this test, protection provided by the normally required MODE 5 applicable LCOs, in addition to the requirements of this LCO, will maintain normal test operations as well as postulated accidents within the bounds of the appropriate safety analyses (Refs. B3.10.8-1 and B3.10.8-2). In addition to the added requirements for the RWM, SRNM, APRM, and control rod coupling, either the NOTCH or the STEP mode is specified for out of sequence withdrawals. Requiring the NOTCH or the STEP mode limits withdrawal steps to a single notch maximum, which limits inserted reactivity, and allows adequate monitoring of changes in neutron flux, which may occur during the test.

As described in LCO 3.0.7, compliance with Special Operations LCOs is optional, and therefore, no criteria of the NRC Policy Statement apply. Special Operations LCOs provide flexibility to perform certain operations by appropriately modifying requirements of other LCOs. A discussion of the criteria satisfied for the other LCOs is provided in their respective Bases.

LCO

As described in LCO 3.0.7, compliance with this Special Operations LCO is optional. SDM tests may be performed while in MODE 2, in accordance with Table 1.1-1, without meeting this Special Operations LCO or its ACTIONS. For SDM tests performed while in MODE 5, additional requirements must be met to ensure that adequate protection against potential reactivity excursions is available. Because multiple control rods will be withdrawn and the reactor will potentially become critical, RPS MODE 2 requirements for Functions 2.a and 2.d of Table 3.3.1.1-1 must be enforced and the approved control rod withdrawal sequence must be enforced by the RWM (LCO 3.3.5.1, Function 1.b, MODE 2), or must be verified by a second licensed operator or other qualified member of the technical staff. To provide additional protection against an inadvertent criticality, control rod withdrawals that do not conform to the ganged withdrawal sequence restrictions specified in LCO 3.1.6, “Rod Pattern Control” (i.e., out of sequence control rod withdrawals) must be made in the NOTCH or STEP withdrawal mode to minimize the potential reactivity insertion associated with each movement. Coupling integrity of withdrawn control rods is required to minimize the probability of a RWE and ensure proper functioning of the withdrawn control rods, if they are required to scram. Because the reactor vessel head may be removed during these tests, no other CORE ALTERATIONS may be in progress. This Special Operations LCO then allows changing the Table 1.1-1 reactor mode switch position requirements to include the startup/hot standby position, such that the SDM tests may be performed while in MODE 5.

BASES

APPLICABILITY

These SDM test Special Operations requirements are only applicable if the SDM tests are to be performed while in MODE 5 with the reactor vessel head removed or the head bolts not fully tensioned. Additional requirements during these tests to enforce control rod withdrawal sequences and restrict other CORE ALTERATIONS provide protection against potential reactivity excursions. Operations in all other MODES are unaffected by this LCO.

ACTIONS

A.1

With one or more of the requirements of this LCO not met for reasons other than Condition B, the testing should be immediately stopped by placing the reactor mode switch in the shutdown or refuel position. This results in a condition that is consistent with the requirements for MODE 5 where the provisions of this Special Operations LCO are no longer required.

B.1

With one control rod not coupled to its associated CRD, the affected control rod shall be declared inoperable. This will require entry into the ACTIONS of LCO 3.9.5, “Control Rod OPERABILITY - Refueling,” and action must be initiated immediately to fully insert the inoperable withdrawn control rod.

SURVEILLANCE REQUIREMENTS

SR 3.10.8.1

Performance of the applicable SRs for LCO 3.3.1.1, Functions 2.a and 2.d will ensure that the reactor is operated within the bounds of the safety analysis.

SR 3.10.8.2 and SR 3.10.8.3

The control rod withdrawal sequences during the SDM tests may be enforced by the RWM (LCO 3.3.5.1, Function 1.b, MODE 2 requirements) or by a second licensed operator or other qualified member of the technical staff. As noted, either the applicable SRs for the RWM (LCO 3.3.5.1) must be satisfied according to the applicable Frequencies (SR 3.10.8.1 and SR 3.10.8.2), or the proper movement of control rods must be verified. This latter verification (i.e., SR 3.10.8.2) must be performed during control rod movement to prevent deviations from the specified sequence. These surveillances provide adequate assurance that the specified test sequence is being followed.

BASES

SURVEILLANCE REQUIREMENTS (continued)

SR 3.10.8.4

Periodic verification of the administrative controls established by this LCO will ensure that the reactor is operated within the bounds of the safety analysis. The 12 hour Frequency is intended to provide appropriate assurance that each operating shift is aware of and verifies compliance with these Special Operations LCO requirements.

SR 3.10.8.5

Coupling verification is performed to ensure the control rod is connected to the control rod drive mechanism and will perform its intended function when necessary. The verification is required to be performed the first time a control rod is withdrawn to the “full out” position after the associated orificed fuel support has been moved or prior to declaring the control rod OPERABLE after work on the control rod or CRD System that could affect coupling. This Frequency is acceptable, considering the mechanical integrity of the bayonet coupling design of the FMCRDs. The bayonet coupling can only be engaged/disengaged by performing a 45° rotation of the FMCRD mechanism relative to the control rod. This is normally performed by rotating the FMCRD mechanism 45° from below the vessel with the control rod kept from rotating by the orificed fuel support that has been installed from above. Once the coupling is engaged and the FMCRD middle flange is bolted into place, the 45° rotation required for uncoupling cannot be accomplished unless the associated orificed fuel support is removed (which would allow for the control rod to be rotated from above) or the FMCRD middle flange is unbolted (which would allow for rotation of the FMCRD mechanism from below). Therefore, after FMCRD maintenance in which the FMCRD is uncoupled and then recoupled or after the orificed fuel support has been moved, it is required to perform coupling verification the first time the FMCRD is withdrawn to the “full out” position. Thereafter, it is not necessary to check the coupling integrity again until the FMCRD maintenance work has resulted in uncoupling and recoupling, or the orificed fuel support has been moved.

REFERENCES

1. NEDE-24011-P-A-US, General Electric Standard Application for Reactor Fuel, Supplement For United States (as amended).

2. DCD Tier 2, Section 15.4.1.

B 3.10 SPECIAL OPERATIONS

B 3.10.9 Reactor Internal Pumps – Testing

BASES

BACKGROUND

The purpose of this Special Operations LCO in MODES 1 and 2 is to allow either the PHYSICS TESTS or the Startup Test Program to be performed with less than nine reactor internal pumps in operation. Testing performed as part of the Startup Test Program (Ref. 1), or PHYSICS TESTS authorized under the provisions of 10 CFR 50.59 (Ref. 2) or otherwise approved by the NRC, may be required to be performed under natural circulation conditions with the reactor critical. LCO 3.4.1, "Reactor Internal Pumps (RIP) Operating," requires that nine reactor internal pumps be in operation during MODES 1 and 2. This Special Operations LCO provides the appropriate additional restrictions to allow testing at natural circulation conditions or with less than nine reactor internal pumps in operation with the reactor critical.

APPLICABLE SAFETY ANALYSES

The operation of the Reactor Coolant Recirculation System is an initial condition assumed in the design basis loss of coolant accident (Ref. 3). During a LOCA the operating RIPs are all assumed to trip at time zero due to a coincident loss of offsite power. The subsequent mean core flow coastdown will be immediate and rapid because of the relatively low inertia of the pumps. During PHYSICS TESTS ≤ 5% RTP, or limited testing during the Startup Test Program for the initial cycle, the decay heat in the reactor coolant is sufficiently low, such that the consequences of an accident are reduced and the coastdown characteristics of the RIPs are not important. In addition, the probability of a Design Basis Accident (DBA) or other accidents occurring during the limited time allowed at natural circulation or with less than nine RIPs in operation is low.

As described in LCO 3.0.7, compliance with Special Operations LCOs is optional, and therefore, no criteria of NRC Policy Statement apply. Special Operations LCOs provide flexibility to perform certain operations by appropriately modifying requirements of other LCOs. A discussion of the criteria satisfied for the other LCOs is provided in their respective Bases.

LCO

As described in LCO 3.0.7, compliance with this Special Operations LCO is optional. However, to perform testing at natural circulation conditions or with less than nine RIPs operating, operations must be limited to those tests defined in the Startup Test Program or approved PHYSICS TESTS performed at ≤ 5% RTP. To minimize the probability of an accident, while operating at natural circulation conditions or with less than

BASES

LCO (continued)

nine operating RIPs the duration of these tests is limited to ≤ 24 hours. This Special Operations LCO then allows suspension of the requirements of LCO 3.4.1 during such testing. In addition to the requirements of this LCO, the normally required MODE 1 or MODE 2 applicable LCOs must be met.

APPLICABILITY

This Special Operations LCO may only be used while performing testing at natural circulation conditions or while operating, with less than nine RIPs, as may be required as part of the Startup Test Program or during low power PHYSICS TESTS. Additional requirements during these tests to limit the operating time at natural circulation conditions reduce the probability that a DBA may occur during natural circulation conditions. Operations in all other MODES are unaffected by this LCO.

ACTIONS

A.1

With the testing performed at natural circulation conditions or less than nine RIPs operating, and the duration of the test exceeding the 24 hour time limit, actions should be taken to promptly shut down. Inserting all insertable control rods will result in a condition that does not require all nine RIPs to be in operation. The allowed Completion Time of 1 hour provides sufficient time to insert the withdrawn control rods.

B.1

With the requirements of this LCO not met for reasons other than those specified in Condition A (e.g., low power PHYSICS TESTS exceeding 5% RTP, or unapproved testing at natural circulation), the reactor mode switch should immediately be placed in the shutdown position. This results in a condition that does not require all nine RIPs to be in operation. The action to immediately place the reactor mode switch in the shutdown position prevents unacceptable consequences from an accident initiated from outside the analysis bounds. Also, operation beyond authorized bounds should be terminated upon discovery.

SURVEILLANCE REQUIREMENTS

SR 3.10.9.1 and SR 3.10.9.2

Periodic verification of the administrative controls established by this LCO will ensure that the reactor is operated within the bounds of this LCO. Because the 1 hour Frequency provides frequent checks of the LCO requirements during the allowed 24 hour testing interval, the probability of operation outside the limits concurrent with a postulated accident is reduced even further.

BASES

REFERENCES

1. DCD Tier 2, Chapter 14.
2. 10 CFR 50.59
3. DCD Tier 2, Section 6.3.3.

B 3.10 SPECIAL OPERATIONS

B 3.10.10 Training Startups

BASES

BACKGROUND	The purpose of this Special Operations LCO is to permit training startups to be performed while in MODE 2 to provide plant startup experience for reactor operators. This training involves withdrawal of control rods to achieve criticality and then further withdrawal of control rods, as would be experienced during an actual plant startup. During these training startups, if the reactor coolant is allowed to heat up, maintenance of a constant reactor vessel water level requires the passage of reactor coolant through the Reactor Water Cleanup System, as the reactor coolant specific volume increases. Since this results in reactor water discharge to the radioactive waste disposal system, the amount of this discharge should be minimized. This Special Operations LCO provides the appropriate additional controls to allow one residual heat removal (RHR) subsystem to be aligned in the shutdown cooling mode, so that the reactor coolant temperature can be controlled during the training startups, thereby minimizing the discharge of reactor water to the radioactive waste disposal system.
APPLICABLE SAFETY ANALYSES	The Emergency Core Cooling System (ECCS) is designed to provide core cooling following a loss of coolant accident (LOCA). The low pressure core flooder (LPFL) mode of the RHR System is one of the ECCS subsystems assumed to function during a LOCA. With reactor power ≤ 1% RTP and average reactor coolant temperature < 93°C, the stored energy in the reactor core and coolant system is very low, and a reduced complement of ECCS can provide the required core cooling, thereby allowing operation with one RHR subsystem in the shutdown cooling mode (Ref. 1). As described in LCO 3.0.7, compliance with Special Operations LCOs is optional, and therefore, no criteria of the NRC Policy Statement apply. Special Operations LCOs provide flexibility to perform certain operations by appropriately modifying requirements of other LCOs. A discussion of the criteria satisfied for the other LCOs is provided in their respective Bases.
LCO	As described in LCO 3.0.7, compliance with this Special Operations LCO is optional. Training startups may be performed while in MODE 2 with no RHR subsystems aligned in the shutdown cooling mode and, therefore, without meeting this Special Operations LCO or its ACTIONS. However, to minimize the discharge of reactor coolant to the radioactive waste

BASES

LCO (continued)

disposal system, performance of the training startups may be performed with one RHR subsystem aligned in the shutdown cooling mode to maintain reactor coolant temperature < 93°C. Under these conditions, the THERMAL POWER must be maintained ≤ 1% RTP and the reactor coolant temperature must be ≤ 93°C. This Special Operations LCO then allows changing the LPFL OPERABILITY requirements. In addition to the requirements of this LCO, the normally required MODE 2 applicable LCOs must also be met.

APPLICABILITY

Training startups while in MODE 2 may be performed with one RHR subsystem aligned in the shutdown cooling mode to control the reactor coolant temperature. Additional requirements during these tests to restrict the reactor power and reactor coolant temperature provide protection against potential conditions that could require operation of both RHR subsystems in the LPFL mode of operation. Operations in all other MODES are unaffected by this LCO.

ACTIONS

A.1

With one or more of the requirements of this LCO not met, (i.e., reactor power > 1% RTP or average reactor coolant temperature > 93°C the reactor may be in a condition that requires the full complement of ECCS subsystems, and the reactor mode switch must be immediately placed in the shutdown position. This results in a condition that does not require all RHR subsystems to be OPERABLE in the LPFL mode of operation. This action may restore compliance with the requirements of this Special Operations LCO or may result in placing the plant in either MODE 3 or MODE 4.

SURVEILLANCE REQUIREMENTS

SR 3.10.10.1 and SR 3.10.10.2

Periodic verification that the THERMAL POWER and reactor coolant temperature limits of this Special Operations LCO are satisfied will ensure that the stored energy in the reactor core and reactor coolant are sufficiently low to preclude the need for all RHR subsystems to be aligned in the LPFL mode of operation. The 1 hour Frequency provides frequent checks of these LCO requirements during the training startup.

REFERENCES

1. DCD Tier 2, Section 6.3.3.

B 3.10 SPECIAL OPERATIONS

B 3.10.11 Low Power PHYSICS TESTS

BASES

BACKGROUND

The purpose of this MODE 5 Special Operations LCO is to permit Low Power PHYSICS TESTING to be performed for those plant configurations in which the reactor pressure vessel (RPV) head is either not in place or the head bolts are not fully tensioned.

Low Power PHYSICS TESTS are performed to demonstrate the fundamental nuclear characteristics of the reactor core and related instrumentation. This Low Power PHYSICS TEST is performed prior to the initial plant startup. Performing the SDM test prior to startup requires the test to be performed while in MODE 5 with the vessel head bolts less than fully tensioned (and possibly with the vessel head removed). While in MODE 5, the reactor mode switch is required to be in the shutdown or refuel position, where the applicable control rod blocks ensure that the reactor will not become critical. The Low Power PHYSICS TESTS require the reactor mode switch to be in the startup or hot standby position, since several control rods will be withdrawn during the Low Power PHYSICS TESTS. This Special Operations LCO provides the appropriate additional controls to allow withdrawing more than one control rod from a core cell containing one or more fuel assemblies when the reactor vessel head bolts are less than fully tensioned.

APPLICABLE SAFETY ANALYSES

Prevention and mitigation of unacceptable reactivity excursions during control rod withdrawal, with the reactor mode switch in the startup or hot standby position while in MODE 5, is provided by the Startup Range Neutron Monitor (SRNM) neutron flux scram (LCO 3.3.1.1, “SSLC Sensor Instrumentation”), average power range monitor (APRM) neutron flux scram (LCO 3.3.1.1), and control rod block instrumentation (LCO 3.3.5.1, “Control Rod Block Instrumentation”). The limiting reactivity excursion during startup conditions while in MODE 5 is the Rod Withdrawal Error (RWE).

RWE analyses assume that the reactor operator follows prescribed withdrawal sequences. For Low Power PHYSICS TESTS performed within these defined sequences, the analyses of References 1 and 2 are applicable. However, for some sequences developed for the Low Power PHYSICS TESTING, the control rod patterns assumed in the safety analyses of References 1 and 2 may not be met. Therefore, special RWE analyses, performed in accordance with an NRC approved methodology, are required to demonstrate that the low power PHYSICS TEST

BASES

APPLICABLE SAFETY ANALYSES (continued)

sequence will not result in unacceptable consequences should a RWE occur during the testing. For the purpose of this test, protection provided by the normally required MODE 5 applicable LCOs, in addition to the requirements of this LCO, will maintain normal test operations as well as postulated accidents within the bounds of the appropriate safety analyses (Refs. 1 and 2). In addition to the added requirements for the RWM, SRNM, APRM, and control rod coupling, either the NOTCH or the STEP mode is specified for out of sequence withdrawals. Requiring the NOTCH or the STEP mode limits withdrawal steps to a single notch maximum, which limits inserted reactivity, and allows adequate monitoring of changes in neutron flux, which may occur during the test.

As described in LCO 3.0.7, compliance with Special Operations LCOs is optional, and therefore, no criteria of the NRC Policy Statement apply. Special Operations LCOs provide flexibility to perform certain operations by appropriately modifying requirements of other LCOs. A discussion of the criteria satisfied for the other LCOs is provided in their respective Bases.

LCO

As described in LCO 3.0.7, compliance with this Special Operations LCO is optional. Low Power PHYSICS TESTS may be performed while in MODE 2, in accordance with Table 1.1-1, without meeting this Special Operations LCO or its ACTIONS. For Low Power PHYSICS TESTS performed while in MODE 5, additional requirements must be met to ensure that adequate protection against potential reactivity excursions is available. Because multiple control rods will be withdrawn and the reactor will potentially become critical, the approved control rod withdrawal sequence must be enforced by the RWM (LCO 3.3.5.1, Function 1b, MODE 2), or must be verified by a second licensed operator or other qualified member of the technical staff. To provide additional protection against an inadvertent criticality, control rod withdrawals that do not conform to the ganged withdrawal sequence restrictions specified in LCO 3.1.6, “Rod Pattern Control” (i.e., out of sequence control rod withdrawals) must be made in the NOTCH or STEP withdrawal mode to minimize the potential reactivity insertion associated with each movement. Coupling integrity of withdrawn control rods is required to minimize the probability of a RWE and ensure proper functioning of the withdrawn control rods, if they are required to scram. Because the reactor vessel head may be removed during these tests, no other CORE ALTERATIONS may be in progress. This Special Operations LCO then allows changing the Table 1.1-1 reactor mode switch position requirements to include the startup/hot standby position, such that the Low Power PHYSICS TESTS may be performed while in MODE 5.

BASES

APPLICABILITY

These Low Power PHYSICS TESTS Special Operations requirements are only applicable if the Low Power PHYSICS TESTS are to be performed while in MODE 5 with the reactor vessel head removed or the head bolts not fully tensioned. Additional requirements during these tests to enforce control rod withdrawal sequences, restrict other CORE ALTERATIONS, and to restrict the reactor power and reactor coolant temperature provide protection against potential reactivity excursions. Operations in all other MODES are unaffected by this LCO.

ACTIONS

A.1

With one or more of the requirements of this LCO not met, the testing should be immediately stopped by placing the reactor mode switch in the shutdown or refuel position. This results in a condition that is consistent with the requirements for MODE 5 where the provisions of this Special Operations LCO are no longer required.

SURVEILLANCE REQUIREMENTS

SR 3.10.11.1 and SR 3.10.11.2

The control rod withdrawal sequences during the Low Power PHYSICS TESTS may be enforced by the RWM (LCO 3.3.5.1, Function 1b, MODE 2 requirements) or by a second licensed operator or other qualified member of the technical staff. As noted, either the applicable SRs for the RWM (LCO 3.3.5.1) must be satisfied according to the applicable Frequencies (SR 3.10.11.1 and SR 3.10.11.2), or the proper movement of control rods must be verified. This latter verification (i.e., SR 3.10.11.2) must be performed during control rod movement to prevent deviations from the specified sequence. These surveillances provide adequate assurance that the specified test sequence is being followed.

SR 3.10.11.3

Periodic verification of the administrative controls established by this LCO will ensure that the reactor is operated within the bounds of the safety analysis. The 12 hour Frequency is intended to provide appropriate assurance that each operating shift is aware of and verifies compliance with these Special Operations LCO requirements.

BASES

SURVEILLANCE REQUIREMENTS (continued)

SR 3.10.11.4

Coupling verification is performed to ensure the control rod is connected to the control rod drive mechanism and will perform its intended function when necessary. The verification is required to be performed the first time a control rod is withdrawn to the "full out" position after the associated orificed fuel support has been moved or prior to declaring the control rod OPERABLE after work on the control rod or CRD System that could affect the coupling. This Frequency is acceptable, considering the mechanical integrity of the bayonet coupling design of the FMCRDs. The bayonet coupling can only be engaged/disengaged by performing a 45° rotation of the FMCRD mechanism relative to the control rod. This is normally performed by rotating the FMCRD mechanism 45° from below the vessel with the control rod kept from rotating by the orificed fuel support that has been installed from above. Once the coupling is engaged and the FMCRD middle flange is bolted into place, the 45° rotation required for uncoupling cannot be accomplished unless the associated orificed fuel support is removed (which would allow for the control rod to be rotated from above) or the FMCRD middle flange is unbolted (which would allow for rotation of the FMCRD mechanism from below). Therefore, after FMCRD maintenance in which the FMCRD is uncoupled and then recoupled or after the orificed fuel support has been moved, it is required to perform coupling verification the first time the FMCRD is withdrawn to the "full out" position. Thereafter, it is not necessary to check the coupling integrity again until the FMCRD maintenance work has resulted in uncoupling and recoupling, or the orificed fuel support has been moved.

SR 3.10.11.5 and SR 3.10.11.6

Periodic verification of the administrative controls established by this LCO will ensure that the reactor is operated within the bounds of this LCO. Because the 1 hour Frequency provides frequent checks of the LCO requirements during the allowed 24 hour testing interval, the probability of operation outside the limits concurrent with a postulated accident is reduced even further.

REFERENCES

1. NEDE-24011-P-A-US, General Electric Standard Application for Reactor Fuel, Supplement For United States (as amended).

2. DCD Tier 2, Section 15.4.1.

B 3.10 SPECIAL OPERATIONS

B 3.10.12 Multiple Control Rod Drive Subassembly Removal – Refueling

BASES

BACKGROUND

The purpose of this MODE 5 Special Operations LCO is to permit multiple control rod drive subassembly removal during refueling by imposing certain administrative controls. For the purposes of this LCO, CRD subassembly removal is the removal of the CRD motor assembly, which includes the motor, brake and synchro, the position indicator probe (PIP) and the spool piece assembly, with the associated control rod maintained in the fully inserted position by applicable mechanical anti-rotational locking devices (i.e., one device applies to FMCRD motor assembly removal prior to spool piece removal, and another device applies to spool piece removal following motor assembly). With the CRD subassembly removed, control rod position indication is not available in the control room. Reference 2 contains a description of the CRD subassembly removal.

Refueling interlocks restrict the movement of control rods and the operation of the refueling equipment to reinforce operational procedures that prevent the reactor from becoming critical during refueling operations. During refueling operations, no more than one control rod, or control rod pair, is permitted to be withdrawn from a core cell containing one or more fuel assemblies.

The refueling interlocks use the “full in” position indicators to determine the position of all control rods. If the “full in” position signal is not present for every control rod, then the all rods in permissive for the refueling equipment interlocks is not present and fuel loading is prevented. Also, the refuel position rod-out interlock will not allow the withdrawal of additional control rod(s).

This Special Operations LCO establishes the necessary administrative controls to allow bypass of the “full in” position indicators for CRDs with subassemblies removed for maintenance and the associated rods maintained fully inserted by their applicable mechanical anti-rotation locking devices. LCO 3.10.6 establishes administrative controls for complete removal of multiple CRDs where the control rods are fully withdrawn.

APPLICABLE SAFETY ANALYSES

Explicit safety analyses (Ref. 1) demonstrate that the functioning of the refueling interlocks and adequate SDM will prevent unacceptable reactivity excursions during refueling. To allow multiple control rod drive subassembly removal, the “full in” position indication is allowed to be

BASES

APPLICABLE SAFETY ANALYSES (continued)

bypassed for each control rod drive with its subassembly removed and the associated control rod maintained fully inserted by its applicable mechanical anti-rotation locking devices.

As described in LCO 3.0.7, compliance with Special Operations LCOs is optional, and therefore, no criteria of the NRC Policy Statement apply. Special Operations LCOs provide flexibility to perform certain operations by appropriately modifying requirements of other LCOs. A discussion of the criteria satisfied for the other LCOs is provided in their respective Bases.

LCO

As described in LCO 3.0.7, compliance with this Special Operations LCO is optional. Operation in MODE 5 with LCO 3.9.3, “Control Rod Position,” LCO 3.9.4, “Control Rod Position Indication,” or LCO 3.9.5, “Control Rod OPERABILITY – Refueling,” not met, can be performed in accordance with the Required Actions of these LCOs without meeting this Special Operations LCO or its ACTIONS. If multiple control rod drive subassembly removal is desired, only non-adjacent (face or diagonal) CRD subassembly removal is allowed to minimize the possibility of an inadvertent criticality. Prior to entering this LCO, any fuel remaining in a cell whose control rod was previously removed under the provisions of another LCO must be removed.

APPLICABILITY

Operation in MODE 5 is controlled by existing LCOs. The exceptions from other LCO requirements (e.g., the ACTIONS of LCO 3.9.3, LCO 3.9.4 or LCO 3.9.5) allowed by this Special Operations LCO are appropriately controlled by allowing only the removal of non-adjacent control rod drive subassemblies whose “full in” indicators are allowed to be bypassed and associated control rods maintained fully inserted by their applicable anti-rotation devices.

ACTIONS

A.1, A.2.1, and A.2.2

If one or more of the requirements of this Special Operations LCO are not met, the immediate implementation of these Required Actions restores operation consistent with the normal requirements for refueling (i.e., all control rods inserted in core cells containing one or more fuel assemblies) or with the exceptions granted by this Special Operations LCO. The Completion Times for Required Action A.1, Required Action A.2.1, and Required Action A.2.2 are intended to require that these Required Actions be implemented in a very short time and carried through in an expeditious manner to either initiate action to restore the affected CRDs and insert their control rods, or initiate action to restore compliance with this Special Operations LCO.

BASES

SURVEILLANCE REQUIREMENTS

SR 3.10.12.1, SR 3.10.12.2, and SR 3.10.12.3

Periodic verification of the administrative controls established by this Special Operations LCO is prudent to preclude the possibility of an inadvertent criticality. The 24 hour Frequency is acceptable, given the administrative controls on control rod drive subassembly removal, and takes into account the reliability of the mechanical anti-rotation locking devices to maintain the control rods in their fully inserted position.

REFERENCES

1. DCD Tier 2, Section 15.4.1.
2. DCD Tier 2, Section 4.6.2.3.4.