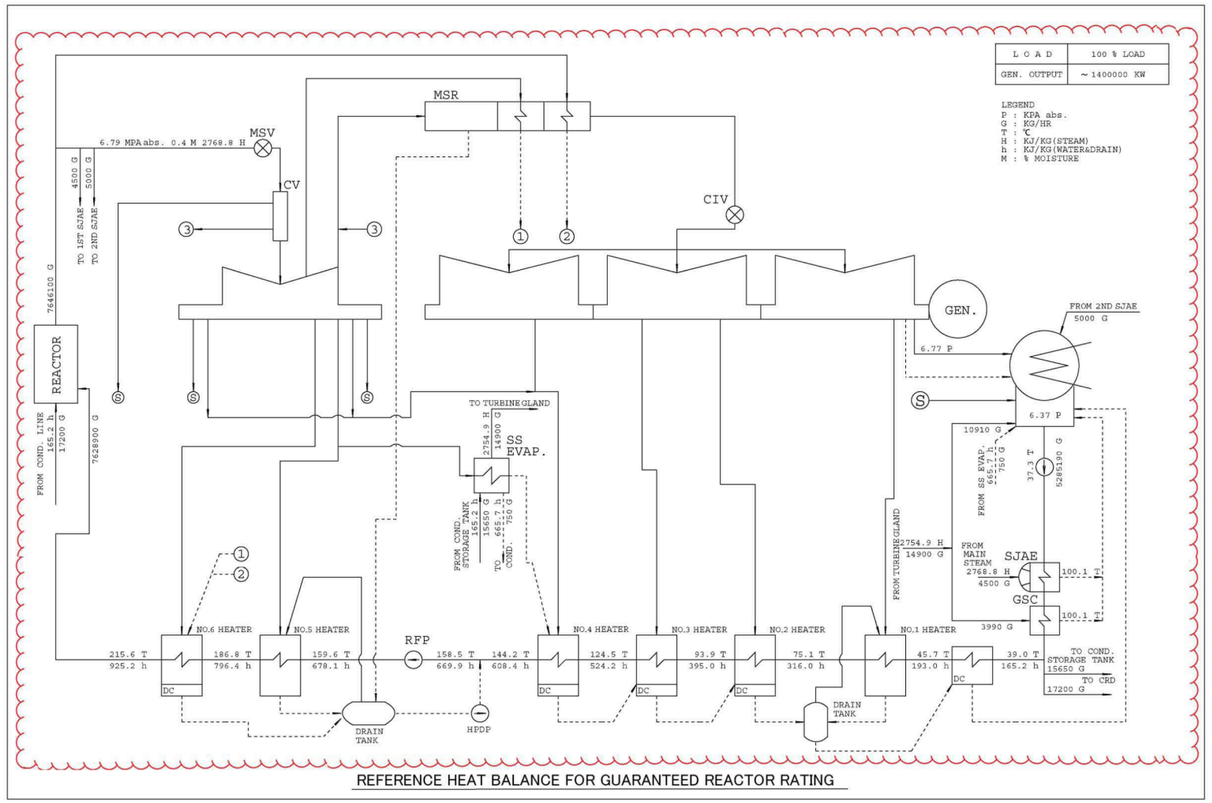

REFERENCE HEAT BALANCE FOR GUARANTEED REACTOR RATING

Figure 10.1-2 – Reference Heat Balance for Guaranteed Reactor Rating

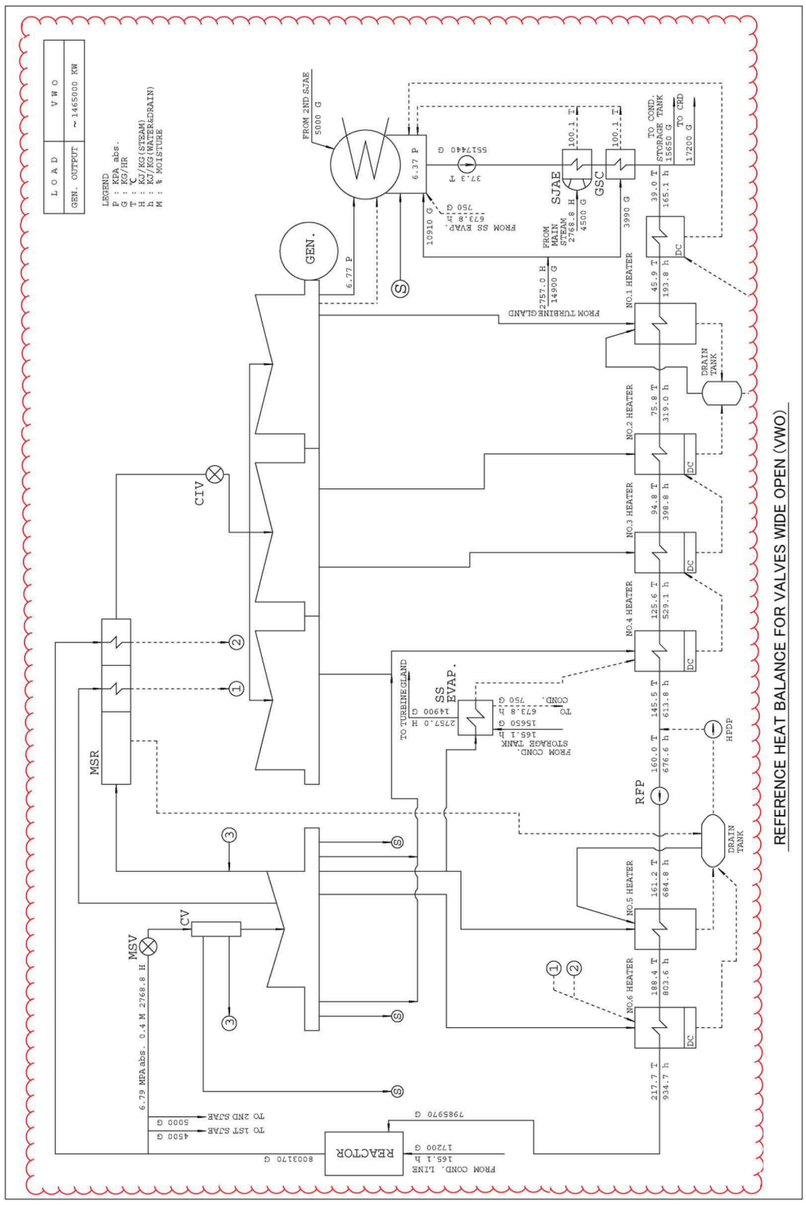

Figure 10.1-3 – Reference Heat Balance for Valves Wide Open (VWO)

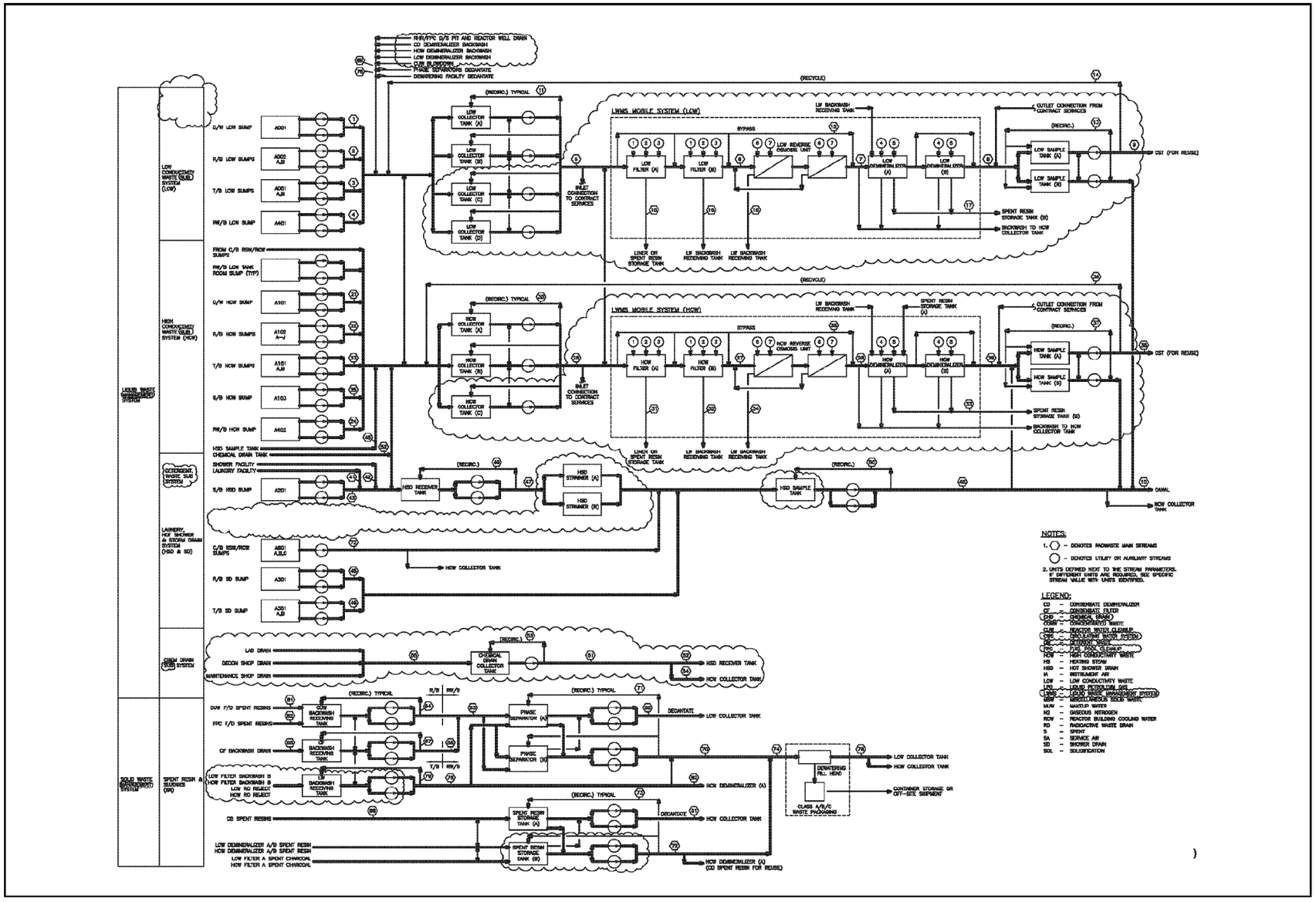

Figure 11.2-1 – Radwaste System (Sheet 1 OF 2)

Stream No. ●	1	2	3	4	5	6	7	8	9	10	11	12	13	14	15	16	17	18	69	76
Sub System	LCW - RD	LCW - RD	LCW - RD	LCW - RD	LCW	LCW	LCW	LCW	LCW	LCW	LCW	LCW	LCW	LCW	LCW	LCW	LCW - Resin	LCW	LCW - SR	LCW - SR
Liquid/Slurry	Liquid	Liquid	Liquid	Liquid	Liquid	Liquid	Liquid	Liquid	Liquid	Liquid	Liquid	Liquid	Liquid	Liquid	Slurry	Slurry	Slurry	Slurry	Liquid	Liquid
Normal Batch/day	4	8	3	2	--	--	--	--	--	--	--	--	--	--	--	1/30	1/365	--	--	--
Maximum Batch/day	44	8	3	2	--	--	--	--	--	--	--	--	--	--		1	1		--	--
Batch Volume m^3 (a)	2.5	2.5	2.5	2.5	140	140	140	140	140	--	--	--	--	--	m/a	0.25	14.4	m/a	80	--
Normal Volume m^3/day	10	15	15	5	55	55	55	55	55	47.3	--	--	--	--	m/a	0.25	14.4	m/a	--	--
Normal Average Volume m^3/day	10	15	15	5	80	80	80	80	80	--	--	--	--	--	--	--	--	--	--	--
Maximum Volume m^3/day	110	15	15	5	815	815	815	815	815	145.8	--	--	--	--	m/a	0.25	14.4	m/a	--	--
Flow m^3/hour	10	10	10	10	34	34	34	34	150	45	85	34	150	150	--	--	--	--	10	10
Temperature °C	88	88	88	88	88	88	88	88	88	88	88	88	88	88	88	88	88	88	88	88
Pressure kg/cm^2	10	10	10	10	10	10	10	10	10	10	10	10	10	10	10	10	10	10	10	10
Conductivity µS/cm	~5	~5	~5	~5	~5	~5	~5	<1	<1	<1	~5	>1	<1	>1	--	--	--	--	--	--
Undissolved Solid ppm	~2	~2	~2	~2	~2	<0.1	<0.1	<0.1	<0.1	<0.1	~2	<0.1	<0.1	<0.1	15 wt%	~1700	15 wt%	~500	--	--

Stream No. ●	21	22	23	24	25	26	27	28	29	30	31	32	33	34	35	36	37	38
Sub System	HCW - RD	HCW - RD	HCW - RD	HCW - RD	HCW - RD	HCW	HCW	HCW	HCW	HCW	HCW	HCW	HCW - Resin	HCW	HCW	HCW	HCW	HCW
Liquid/Slurry	Liquid	Liquid	Liquid	Liquid	Liquid	Liquid	Liquid	Liquid	Liquid	Liquid	Slurry	Slurry	Slurry	Slurry	Liquid	Liquid	Liquid	Liquid
Normal Batch/day	--	2	2	1.2	0.8	--	--	--	--	--	1/365	12/365	1/365	12/365	--	--	--	--
Maximum Batch/day	--	22	2	1.2	0.8	--	--	--	--	--	--	--	--	--	--	--	--	--
Batch Volume m^3 (a)	2.5	2.5	2.5	2.5	2.5	140	140	140	140	140	1.4	1	1.4	12	--	--	--	140
Normal Volume m^3/day	--	5	5	3	2	15	15	15	15	--	1.4	1	1.4	12	--	--	--	15
Normal Average Volume m^3/day	--	--	--	--	--	--	--	--	--	--	--	--	--	--	--	--	--	--
Maximum Volume m^3/day	--	55	5	3	2	55	55	55	55	--	1.4	1	1.4	12	--	--	--	55
Flow m^3/hour	10	10	10	10	10	34	34	34	34	88	--	--	--	--	34	150	150	150
Temperature °C	88	88	88	88	88	88	88	88	88	88	88	88	88	88	88	88	88	88
Pressure kg/cm^2	10	10	10	10	10	10	10	10	10	10	10	10	10	10	10	10	10	10
Conductivity µS/cm	~5	~1000	~1000	~10000	~10000	1000~10000	<10	<10	<1	1000~10000	--	--	--	--	1000~10000	1000~10000	<1	<1
Undissolved Solid ppm	~2	0.05 wt%	0.05 wt%	0.05 wt%	1.25 wt%	0.05~2.00 wt%	<0.5	<0.5	<0.1	0.05~2.00 wt%	18 wt%	~1700	18 wt%	~500	0.05~2.00 wt%	0.05~2.00 wt%	<0.1	<0.1

Stream No. ●	41	42	43	44	45	46	47	48	49	50
Sub System	DW	DW	DW	Not used	DW	DW	DW	DW	DW	DW
Liquid/Slurry	Liquid	Liquid	Liquid	--	Liquid	Liquid	Liquid	Liquid	Liquid	Liquid
Normal Batch/day	--	--	--	--	8	8	--	--	--	--
Maximum Batch/day	--	--	--	--	12	12	--	--	--	--
Batch Volume m^3	--	--	2.5	--	2.5	2.5	30	30	30	--
Normal Volume m^3/day	7.5	3.5	--	--	20	20	4	4	--	--
Normal Average Volume m^3/day	--	--	--	--	--	--	--	--	--	--
Maximum Volume m^3/day	32.5	18.5	--	--	30	30	12	12	--	--
Flow m^3/hour	--	10	10	--	10	20	34	80	88	80
Temperature °C	88	88	88	--	88	88	88	88	88	88
Pressure kg/cm^2	10	10	10	--	10	10	10	10	10	10
Conductivity µS/cm	--	--	--	--	--	--	--	--	--	--
Undissolved Solid ppm	--	--	--	--	--	--	--	--	--	--

Stream No. ●	51	52	53	54	55
Sub System	CHD	CHD	CHD	CHD	CHD
Liquid/Slurry	Liquid	Liquid	Liquid	Liquid	Liquid
Normal Batch/day	--	--	--	--	--
Maximum Batch/day	--	--	--	--	--
Batch Volume m^3	4	4	4	4	4
Normal Volume m^3/day	2	2	2	2	2
Normal Average Volume m^3/day	--	--	--	--	--
Maximum Volume m^3/day	2	2	2	2	2
Flow m^3/hour	4	4	10	4	4
Temperature °C	88	88	88	88	88
Pressure kg/cm^2	10	10	10	10	10
Conductivity µS/cm	--	--	--	--	--
Undissolved Solid ppm	--	--	--	--	--

Stream No. ●	61	62	63	64	65	66	67	68	69	70	71	72	73	74	75	76	77	78	79	80	81
Sub System	SR	SR	SR	SR	SR	SR	SR	SR	LCW - SR	SR	SR	SR	SR	SR	Not used	LCW - SR	Not used	SR	SR	SR	SR
Liquid/Slurry	Slurry	Slurry	Slurry	Slurry	Slurry	Slurry	Slurry	Slurry	Liquid	Liquid	Slurry	Slurry	Slurry	Slurry	--	Liquid	--	Slurry	Slurry	Slurry	Liquid
Normal Batch/day	0.08	0.02	0.08	--	0.088	0.088	--	6/3 yr	--	--	--	--	--	--	--	--	--	--	--	--	--
Maximum Batch/day	2	1	1	--	3	3	--	2	--	--	--	--	--	--	--	--	--	--	--	--	--
Batch Volume m^3	15	20	30/35	--	35	35	--	30	80	--	--	--	--	--	--	--	--	--	--	--	--
Normal Volume m^3/day	15	20	30/35	--	35	35	--	30	--	--	--	--	--	--	--	--	--	--	--	--	--
Normal Average Volume m^3/day	1.2	0.4	1.8	--	3.1	3.1	--	0.18	--	--	--	--	--	--	--	--	--	--	--	--	--
Maximum Volume m^3/day	30	20	35	--	105	105	--	60	--	--	--	--	--	--	--	--	--	--	--	--	--
Flow m^3/hour	--	--	30	90	--	30	30	--	10	10	190	10	90	10	--	10	--	30	90	30	10
Temperature °C	88	88	88	88	88	88	88	88	88	88	88	88	88	88	--	88	--	88	88	88	88
Pressure kg/cm^2	10	10	10	10	10	10	10	10	10	10	10	10	10	10	--	10	--	10	10	10	10
Conductivity µS/cm	--	--	--	--	--	--	--	--	--	--	--	--	--	--	--	--	--	--	--	--	--
Undissolved Solid ppm	2200	2800	2200~2800	2200~2800	850	850	850	10 wt%	--	10~15 wt%	10 wt%	15 wt%	15 wt%	10~15 wt%	--	--	--	>2800	>2000	>2000	--

Stream No. ○	1	2	3	4	5	6	7
Utility	MUW	IA	SA	MLW	SA	MUW	SA
Pressure kg/cm^2	4.0	4.0	4.0	4.0	4.0	4.0	4.0
Flow m^3/hour	10	38 Nm^3/hr	22 Nm^3/hr	10	112 Nm^3/hr	10	112 Nm^3/hr
Heat kcal/hr	--	--	--	--	--	--	--
Temperature °C	≤40	≤40	≤40	≤40	≤40	≤40	≤40

Notes:
(a) Based on one collector tank batch

Figure 11.2-1 – Radwaste System (Sheet 2 OF 2)

DESCRIPTION	SHEET NUMBER	SUBSYSTEM		LOCATION
FUNDAMENTAL FLOW DIAGRAM	7	VARIOUS	N/A	N/A
LOW CONDUCTIVITY COLLECTOR TANKS A,B,C,D	3	LCW	LOW CONDUCTIVITY WASTE	RADWASTE BLDG
LOW FILTER A,B	4			
LOW REVERSE OSMOSIS UNIT	4a			
LOW DEMINERALIZER A,B,J NEW RESIN HOPPER	5			
LOW SAMPLE TANK A,B AND DANAL DISCHARGE	6	LCW	LOW CONDUCTIVITY WASTE	
HIGH CONDUCTIVITY COLLECTOR TANKS A,B,C	7	HCW	HIGH CONDUCTIVITY WASTE	
DELETED	8			
	9			
HCW FILTER A,B	9a			
	10			
HCW REVERSE OSMOSIS UNIT	10a			
	11			
HCW DEMINERALIZER A,B	11a	HCW	HIGH CONDUCTIVITY WASTE	RADWASTE BLDG
HCW SAMPLE TANKS A,B	11b	HCW	HIGH CONDUCTIVITY WASTE	RADWASTE BLDG
HSD RECEIVING TANK	12	HSD	SHOWER AND LAUNDRY DRAINS	SERVICE BLDG
HSD STRAINER A,B	13	HSD	SHOWER AND LAUNDRY DRAINS	RADWASTE BLDG
HSD SAMPLE TANK	14	HSD	SHOWER AND LAUNDRY DRAINS	RADWASTE BLDG
CHEMICAL DRAIN COLLECTOR TANK	14a	CHD	LAB, DECON, MAINT, SHOP DRAIN	RADWASTE BLDG
CUW AND CF BACKWASH RECEIVING TANKS	15	SR	SPENT RESIN	REACTOR/TURBINE BLDG
LW BACKWASH RECEIVING TANK	15a	SR	SLUDGE	RADWASTE BLDG
PHASE SEPARATORS A,B	16	SR	POWDERED SPENT RESIN/SLUDGE	
SPENT RESIN STORAGE TANK AND DEWATERING FACILITY	17	SR	SPENT RESIN	
	18			
	19			
	20			
	21			
DELETED	22			
	23			
	24			
	25			
	26			
	27			
	28			
	29			
	30			
	31			
	32			
	33			
	34			
	35			
	36			

NOTES:

1. SYSTEM DESIGN CONDITION

   SYSTEM DESIGN CONDITIONS ARE SHOWN AS FOLLOWS, UNLESS OTHERWISE NOTED.

ITEM		APPLICATION	
CLASS		4D	
MAXIMUM OPERATION PRESSURE (MPa G)		10.0	
MAXIMUM OPERATION TEMPERATURE (°C)		65	
NORMAL OPERATION TEMPERATURE (°C)		BELOW 60	
SEISMIC CATEGORIZATION		B	
PROCESS FLUID		WATER	
PIPING MATERIAL	SS	CORROSIVES	
	CS	NORMAL	
PIPING THICKNESS	SS	SCH40	
	CS	OVER 65A	SCH40
		BELOW 65A	SCH80

2. ALL EQUIPMENTS & INSTRUMENTS ARE PREFIXED BY SYSTEM NUMBER K17 AND SUBSYSTEM ABBREVATION UNLESS OTHERWISE NOTED.
3. INSTRUMENTS WITH PART NUMBER OF THE 600 SERIES ARE LOCATED IN MAIN CONTROL ROOM (MCR).
4. IT IS INTENDED THAT AN AIR BREAK BE PROVIDED TO PREVENT FLOW FROM THE RW/B HDW INTO THE C/B.
5. TANKS, EQUIPMENT AND PIPING CONTAINING CHEMICALS COVERED BY LOCAL STATE AND FEDERAL EPA REGULATIONS 40CFR PARTS 100 TO 790 SHALL BE PROTECTED WITH 110% CAPACITY SECONDARY CONTAINMENTS, LINED TRENCHES, LINED AND DIKED AREAS OR DOUBLE WALLED PIPING WITH LEAK DETECTORS AND ALARMS.
6. ECCS EQUIPMENT FROM SUMP BACKFLOW PROTECTION CHECK VALVES ARE SEISMIC CLASS A????
7. SAFETY RELATED HIGH HIGH LEVEL SIGNAL TRIPS PUMPS AND CLOSES VALVES TO TERMINATE THE RESPECTIVE RSW DIVISIONAL FLOW AND UHS SUPPLY.
8. PIPE WITH A DESIGN PRESSURE OF 2.82 MPa OR GREATER SHALL HAVE ITS MINIMUM WALL THICKNESS NO LESS THAN THAT OF A STANDARD WEIGHT PIPE. THICKER THAN STANDARD WEIGHT PIPE SHALL BE USED IF REQUIRED BY THE DESIGN PRESSURE OR OTHER REQUIREMENTS.
9. VALVES WITH A DESIGN PRESSURE OF 2.82 MPa OR GREATER SHALL BE A MINIMUM OF CLASS 300, OR OF A HIGHER CLASS IF REQUIRED BY THE DESIGN PRESSURE.

BUILDING SYMBOL

1. DW DRYWELL
2. R/B REACTOR BUILDING
3. C/B CONTROL BUILDING
4. T/B TURBINE BUILDING
5. S/B SERVICE BUILDING
6. RW/B RADWASTE BUILDING

VALVE SYMBOLS

- DIAPHRAGM VALVE
- BALL VALVE (CLOSED)
- BUTTERFLY VALVE
- CHECK VALVE
- GATE VALVE
- GATE VALVE (CLOSED)
- GLOBE VALVE
- PLUG VALVE
- PLUG VALVE (CLOSED)

LEGEND

1. VALVE OPERATORS ARE DEPICTED AS FOLLOWS:

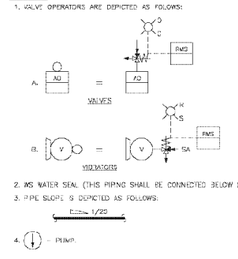

2. MS WATER SEAL (THIS PIPING SHALL BE CONNECTED BELOW LL LEVEL).
3. PIPE SLOPE IS DEPICTED AS FOLLOWS:

   1/25

4. PUMP.

REFERENCE DOCUMENTS

	MPL NO.
1. VALVE GLAND LEAKAGE, RADWASTE SYSTEM P&ID	K17-1010
2. CONDENSATE DEMINERALIZER P&ID	K27-1010
3. FUEL POOL COOLING & CLEANUP SYSTEM P&ID	G41-1010
4. CONDENSATE FILTER FACILITY P&ID	N26-1010
5. REACTOR WATER CLEANUP SYSTEM P&ID	G31-1010
6. REACTOR BUILDING COOLING WATER SYSTEM P&ID	P21-1010
7. STATION SERVICE AIR SYSTEM P&ID	P51-1010
8. INSTRUMENT AIR SYSTEM P&ID	P52-1010
9. MAKEUP WATER CONDENSATE SYSTEM P&ID	F13-1010
10. AREA RADIATION MONITORING SYSTEM P&ID	D21-1010
11. ATMOSPHERIC CONTROL SYSTEM P&ID	J31-1010
12. HVAC SYSTEM P&ID	U41-1010
13. SAMPLING SYSTEM P&ID	P81-1010
14. MAKEUP WATER PURIFIED SYSTEM P&ID	F11-1010
15. RESIDUAL HEAT REMOVAL SYSTEM P&ID	E11-1010
16. HEATING STEAM AND CONDENSATE RETURN SYSTEM P&ID	P61-1010
17. PROCESS RADIATION MONITORING SYSTEM P&ID	D11-1010
18. REACTOR SERVICE WATER SYSTEM P&ID	P41-1010
19. REACTOR BUILDING COOLING WATER/REACTOR SERVICE WATER SYSTEM ISO	P21-1020

Figure 11.2-2 – Radwaste System (Sheet 1 OF 36)

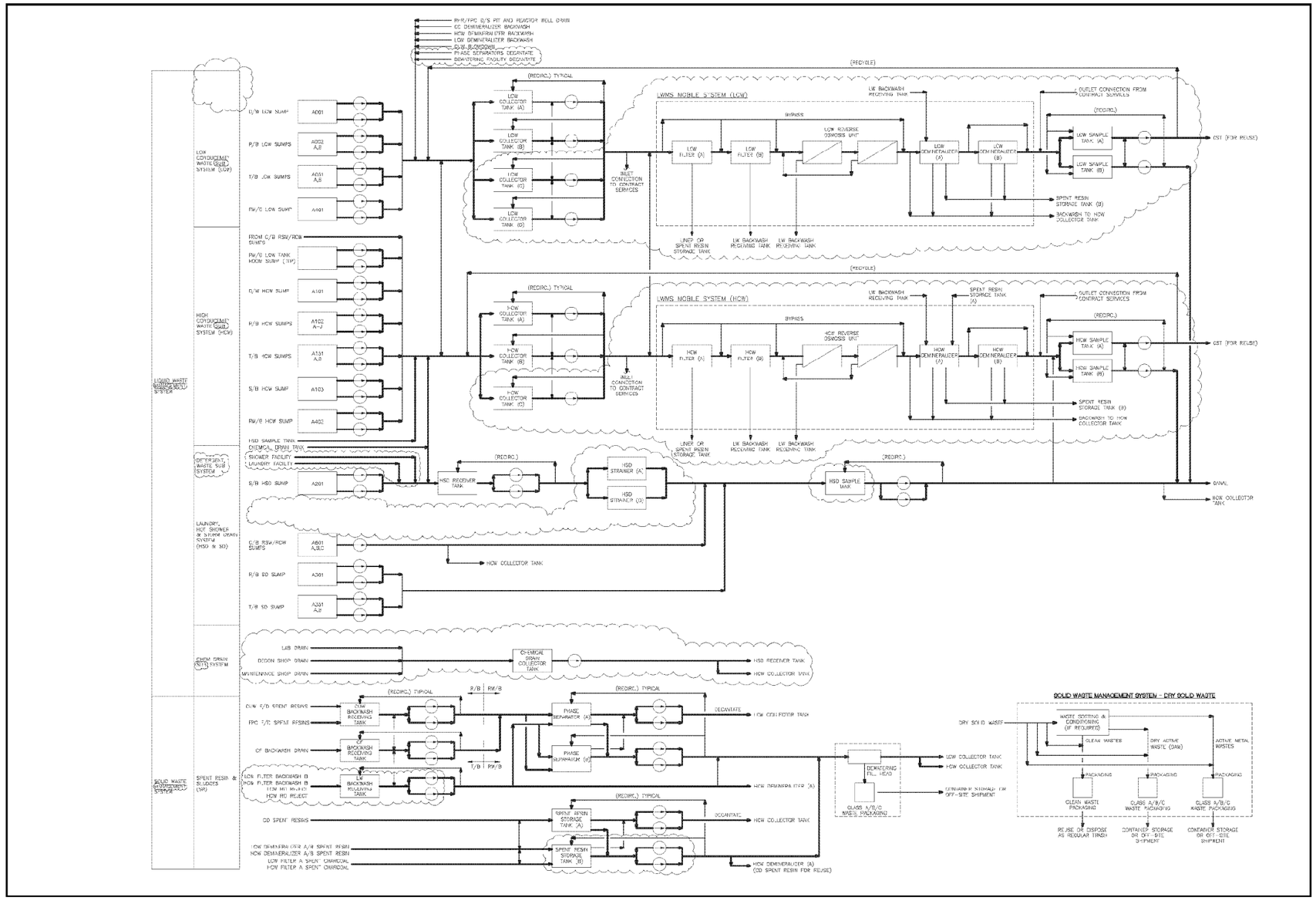

Figure 11.2-2 – Radwaste System (Sheet 2 OF 36)

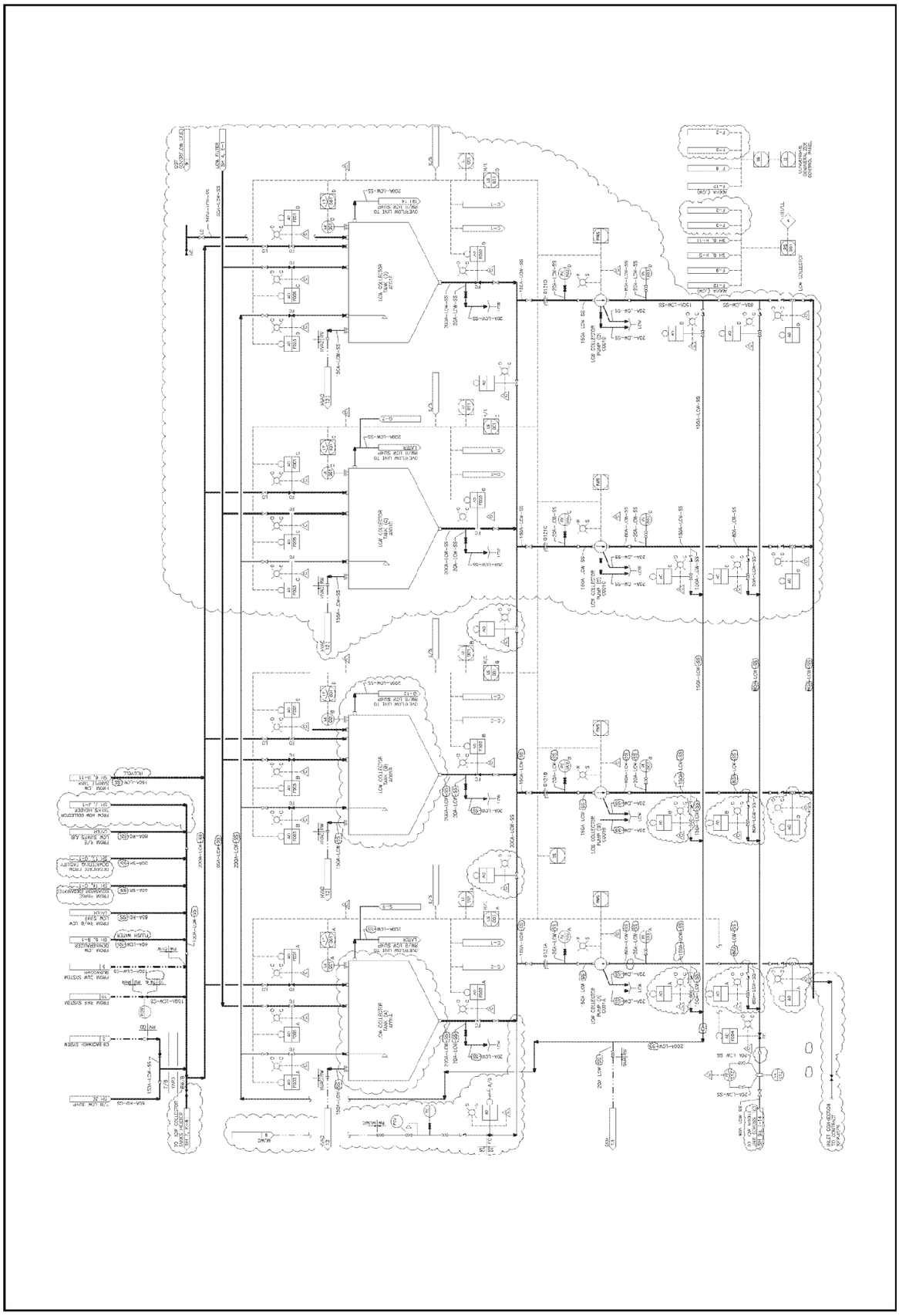

Figure 11.2-2 – Radwaste System (Sheet 3 OF 36)

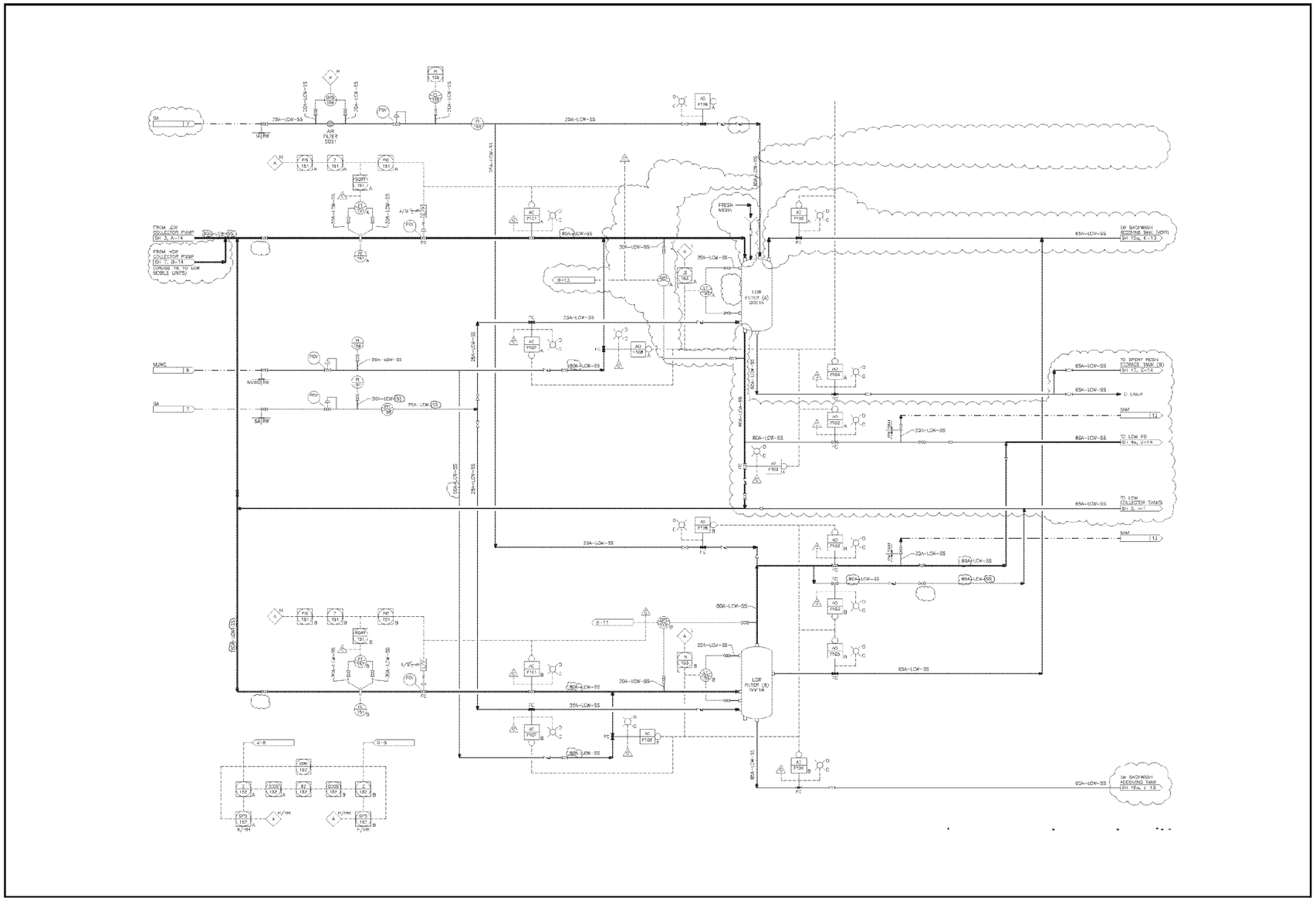

Figure 11.2-2 – Radwaste System (Sheet 4 OF 36)

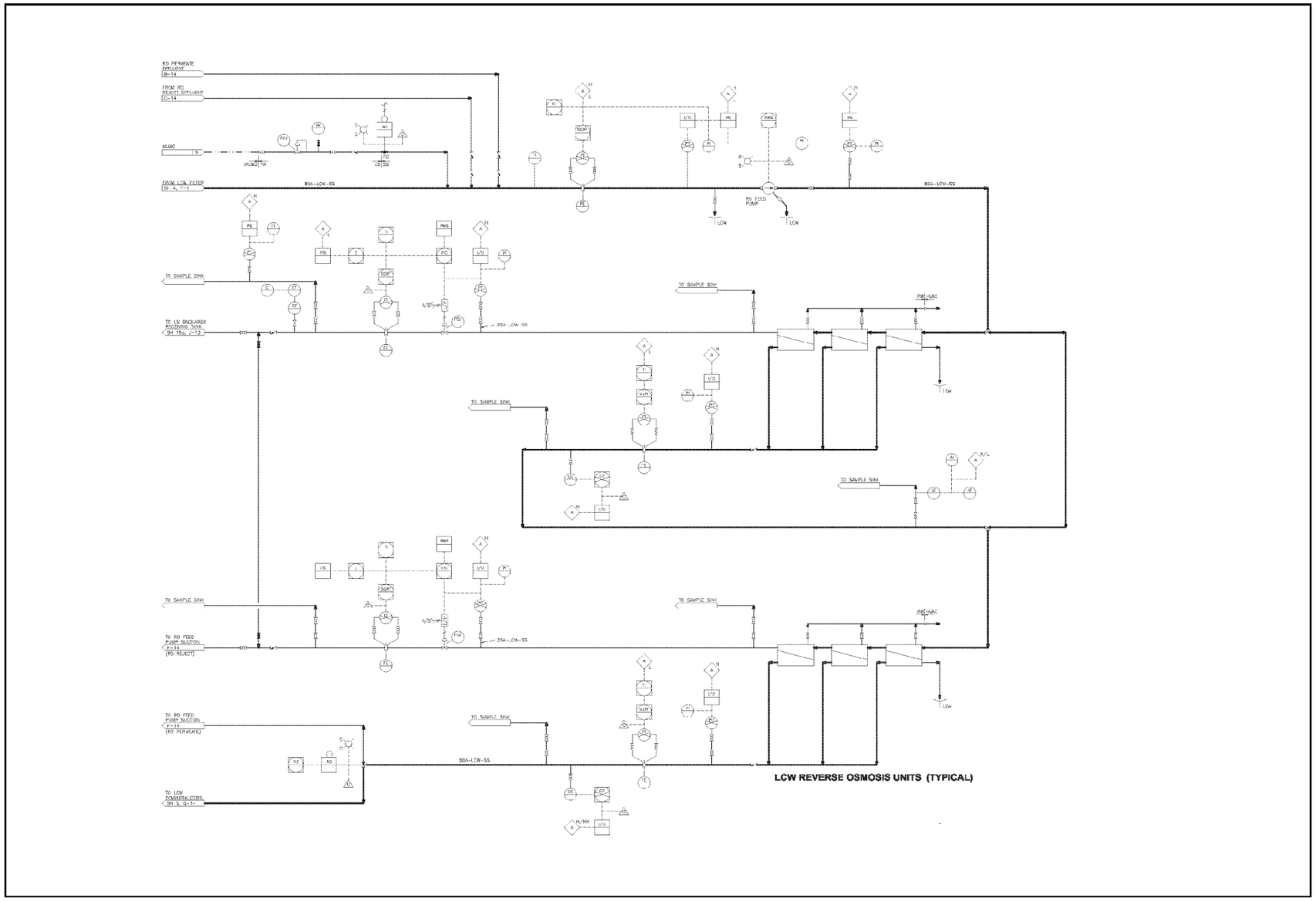

Figure 11.2-2 – Radwaste System (Sheet 4a OF 36)

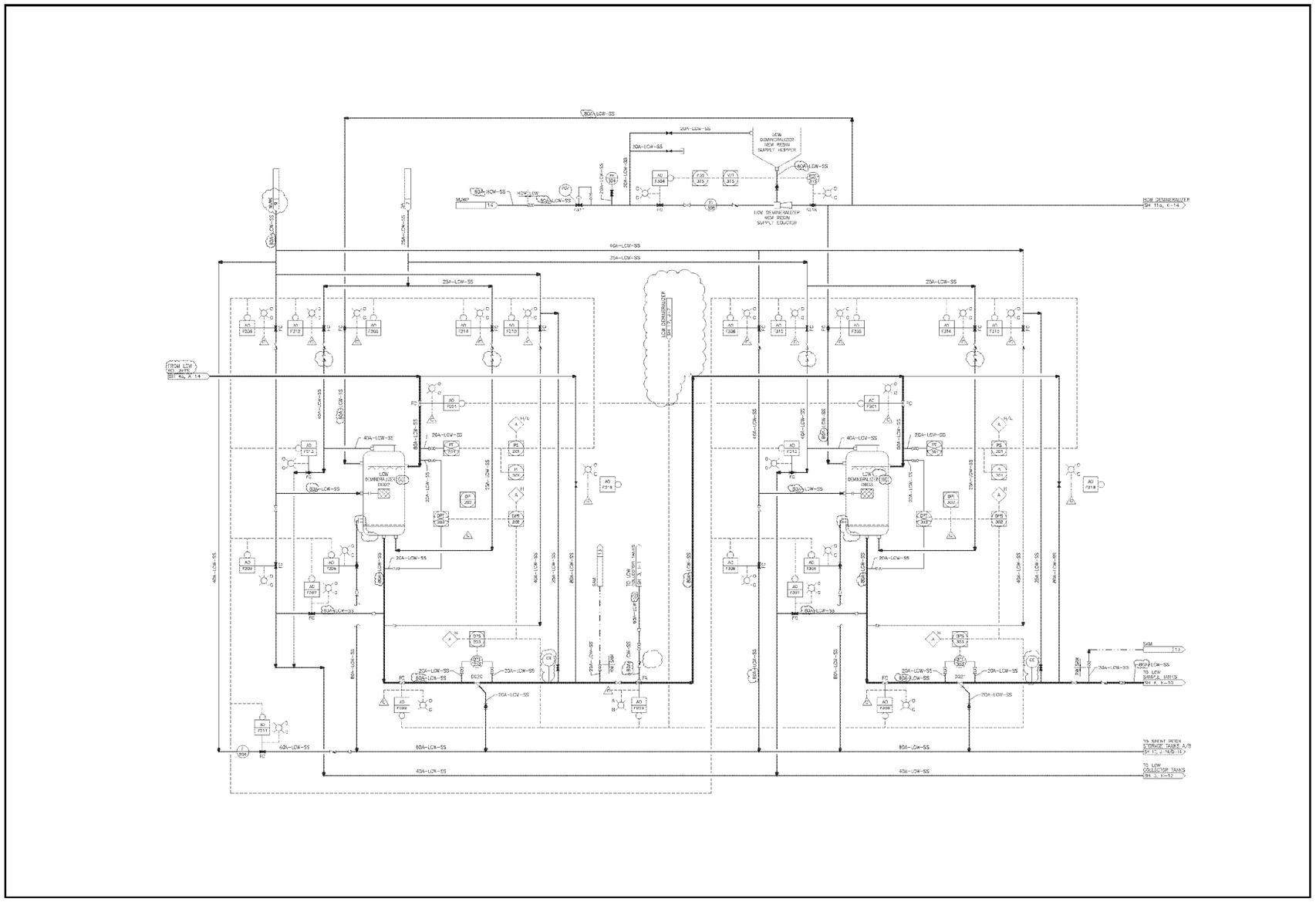

Figure 11.2-2 – Radwaste System (Sheet 5 OF 36)

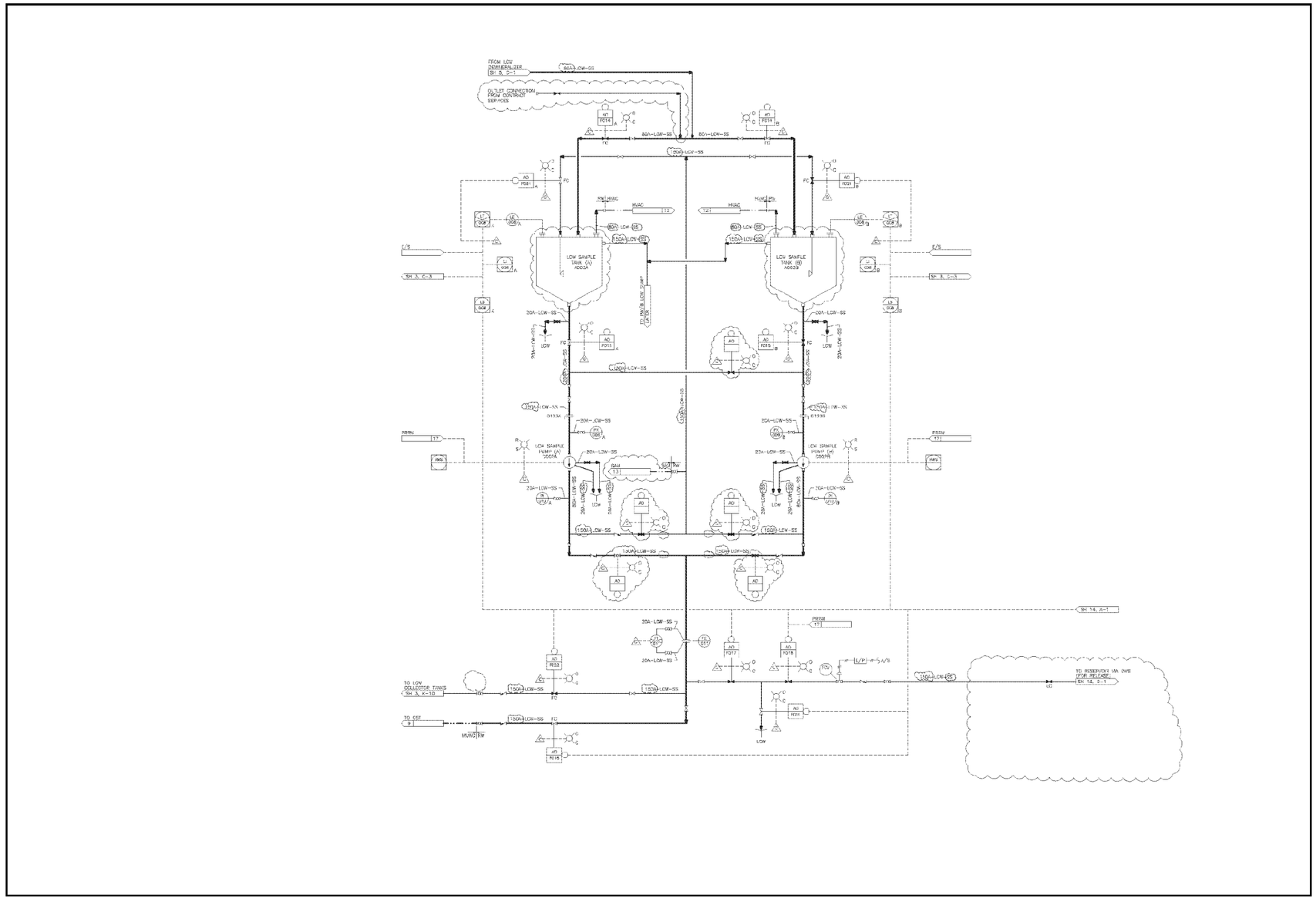

Figure 11.2-2 – Radwaste System (Sheet 6 OF 36)

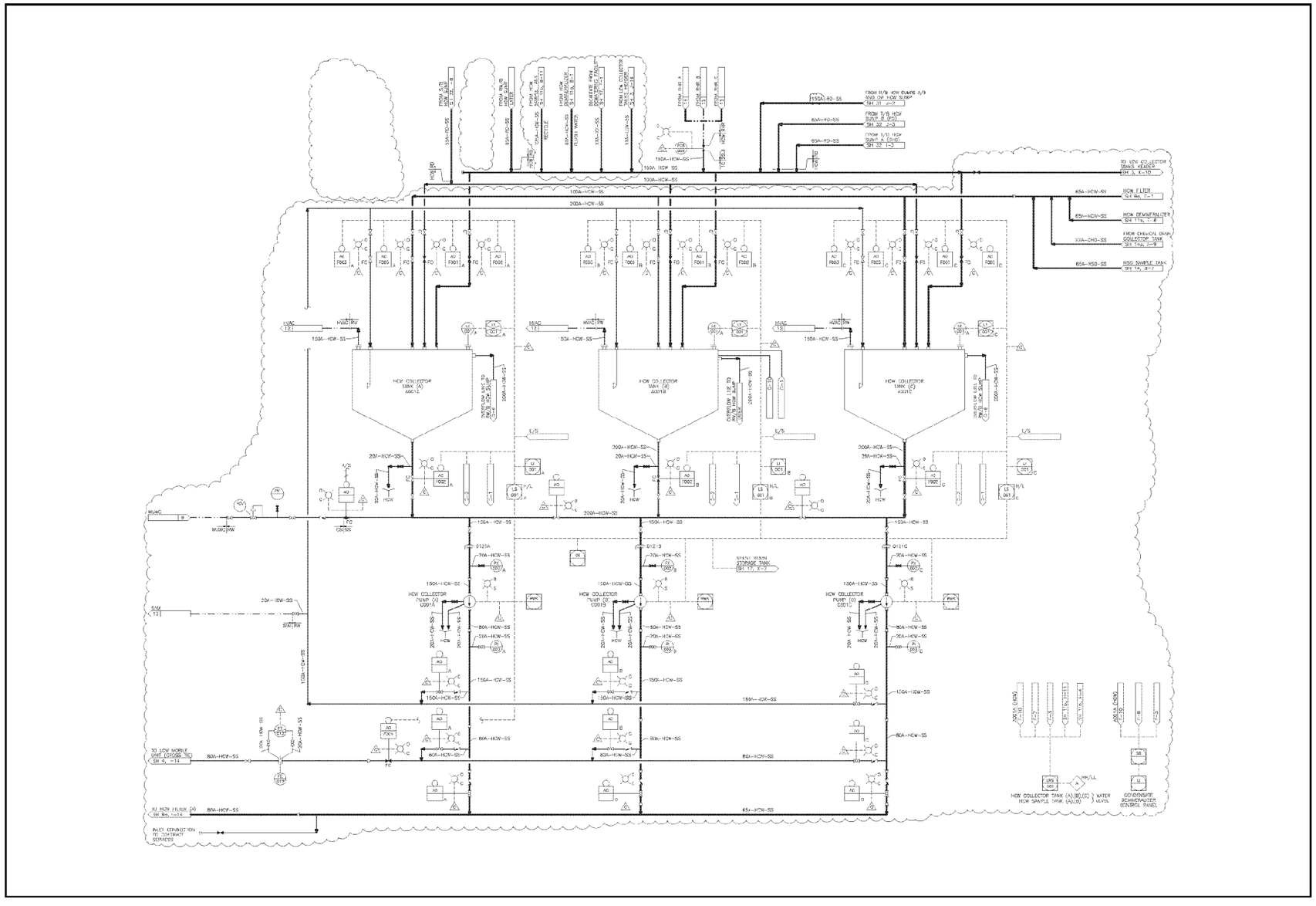

Figure 11.2-2 – Radwaste System (Sheet 7 OF 36)

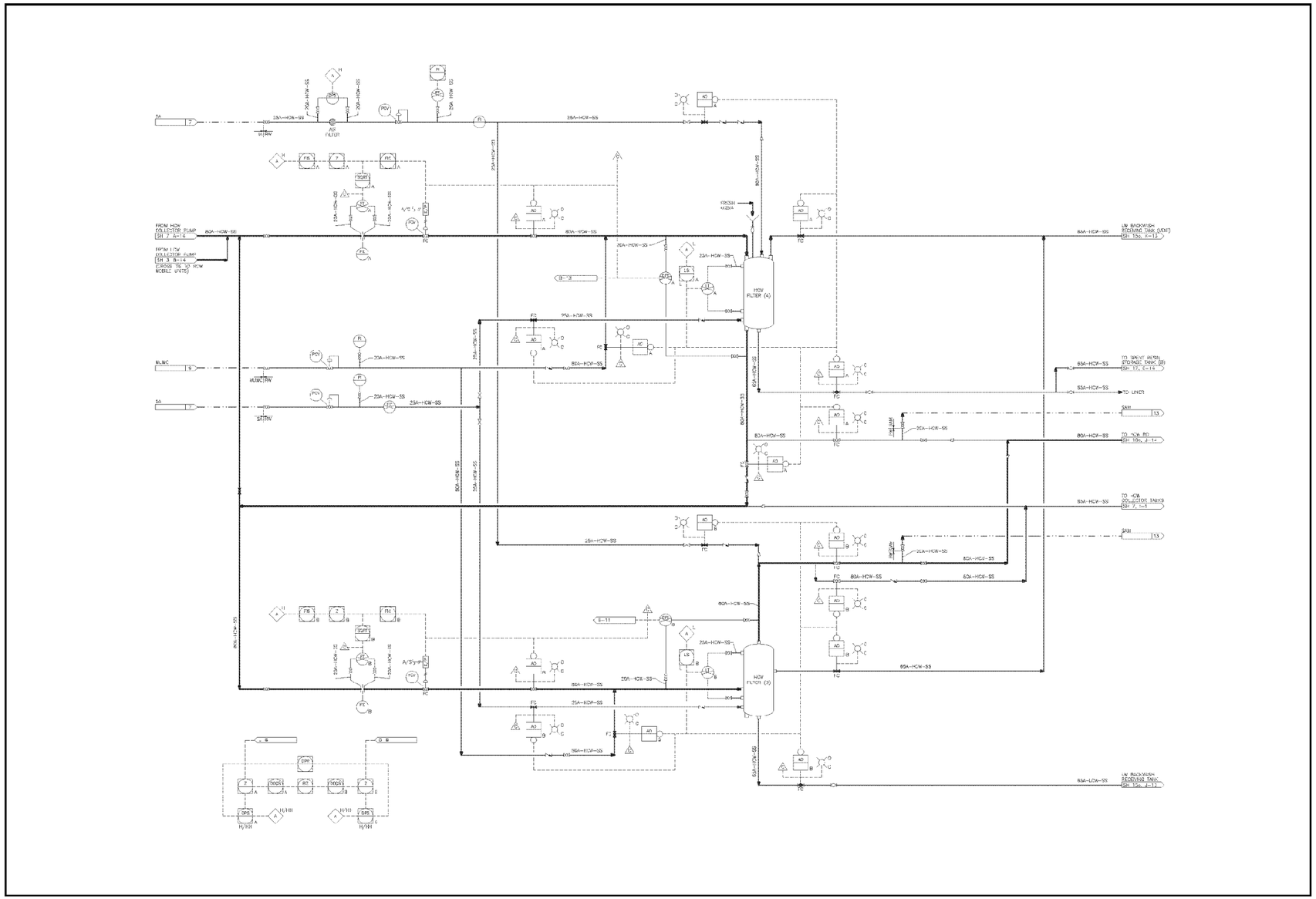

Figure 11.2-2 – Radwaste System (Sheet 9a OF 36)

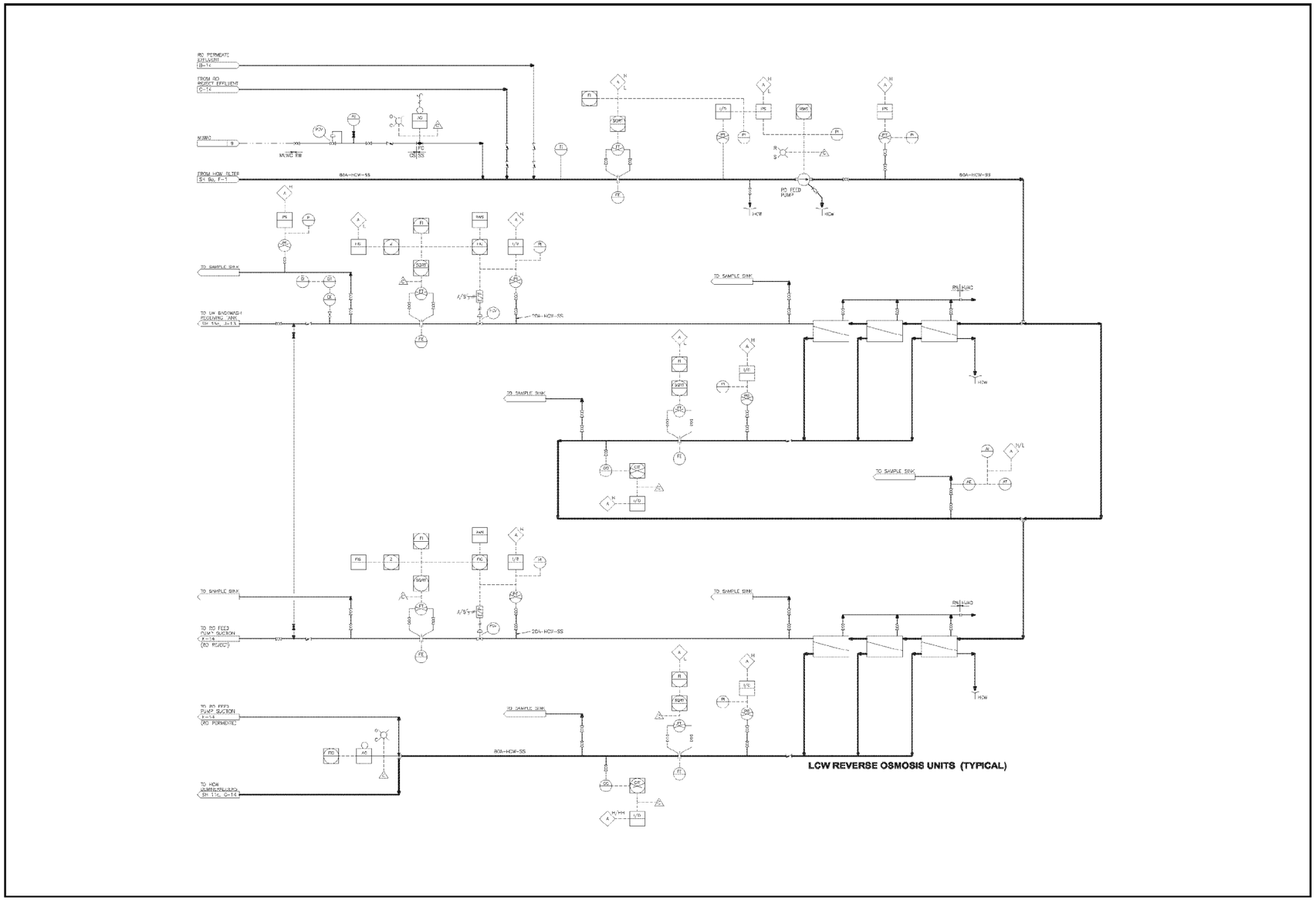

Figure 11.2-2 – Radwaste System (Sheet 10a OF 36)

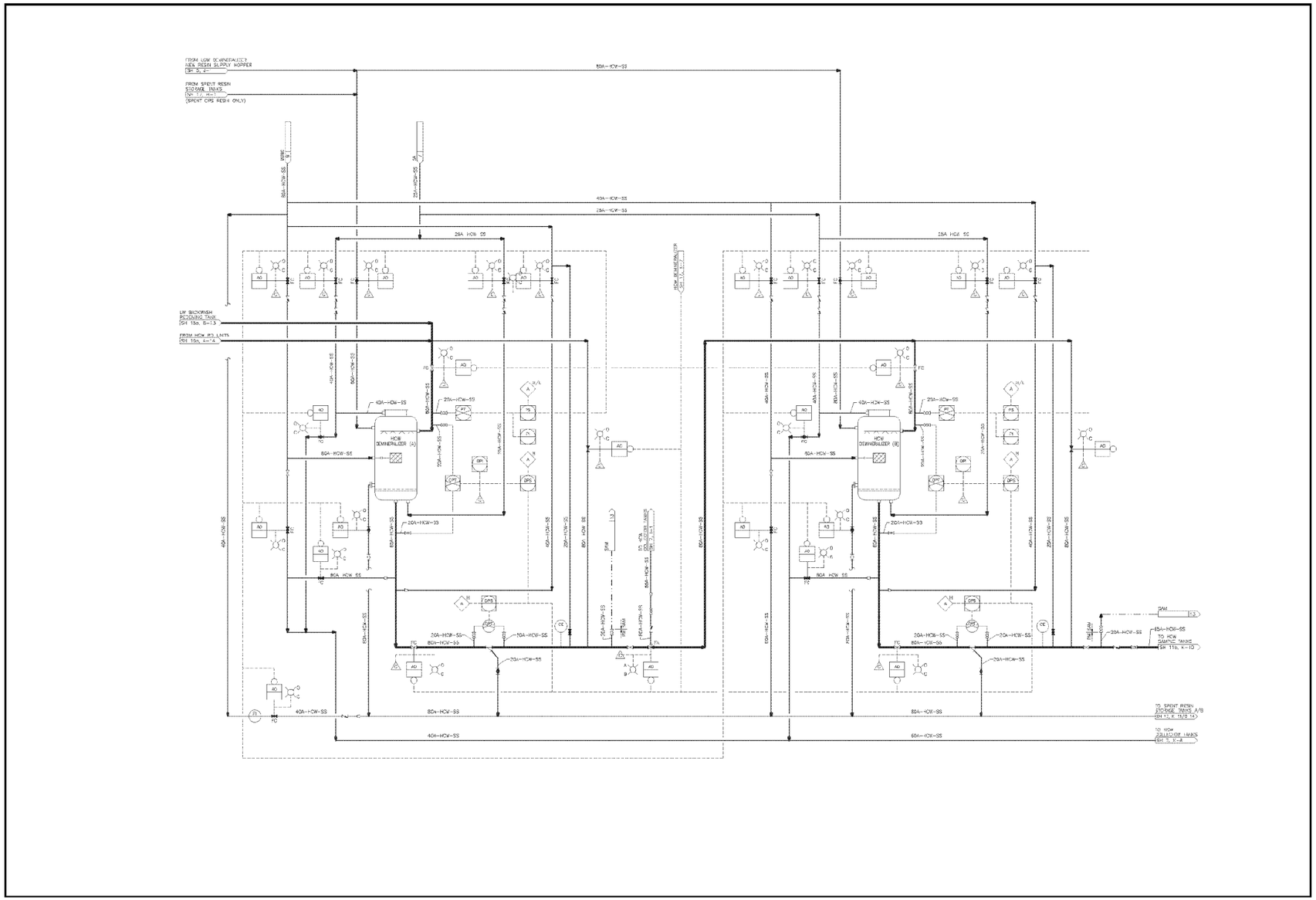

Figure 11.2-2 – Radwaste System (Sheet 11a OF 36)

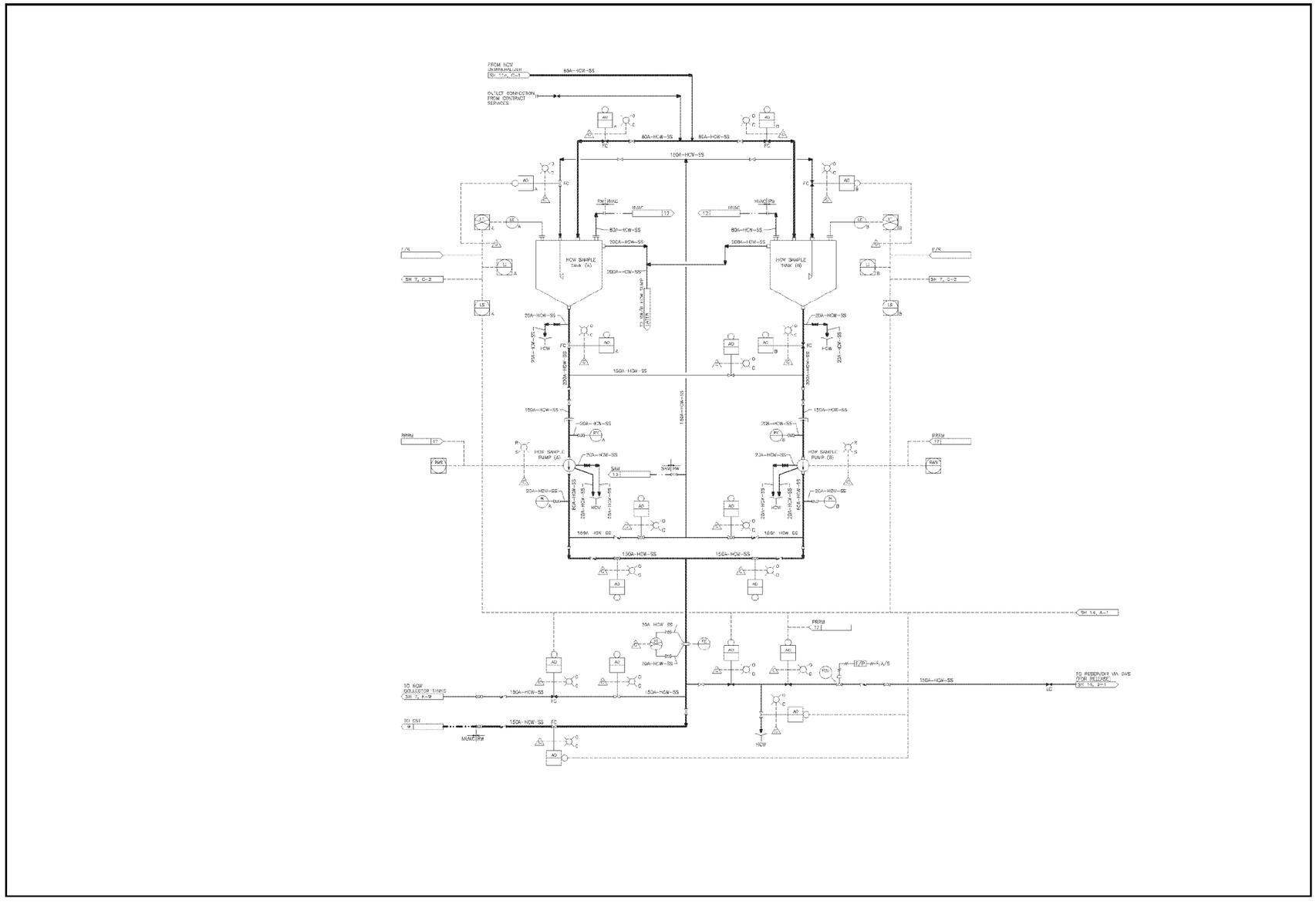

Figure 11.2-2 – Radwaste System (Sheet 11b OF 36)

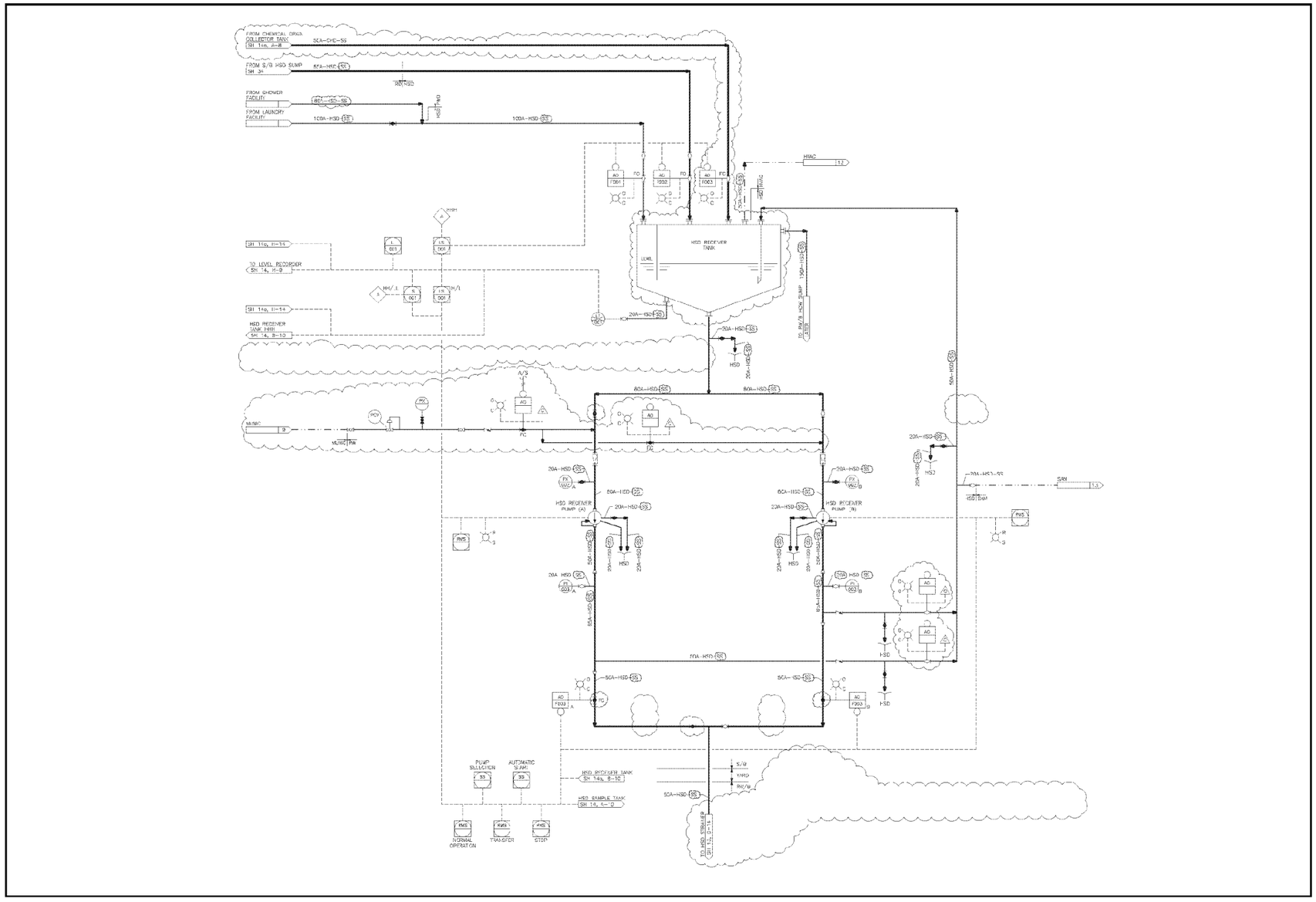

Figure 11.2-2 – Radwaste System (Sheet 12 OF 36)

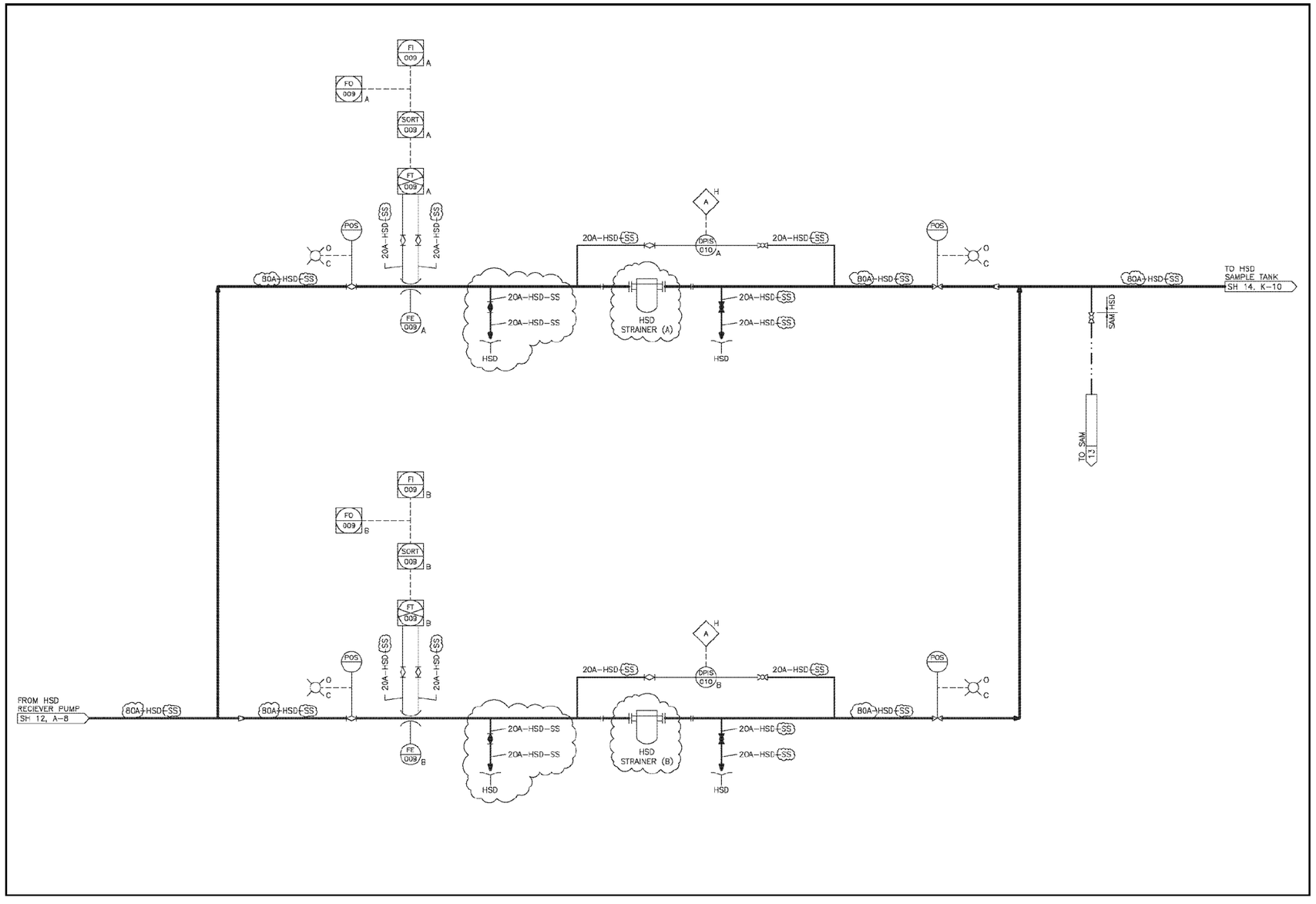

Figure 11.2-2 – Radwaste System (Sheet 13 OF 36)

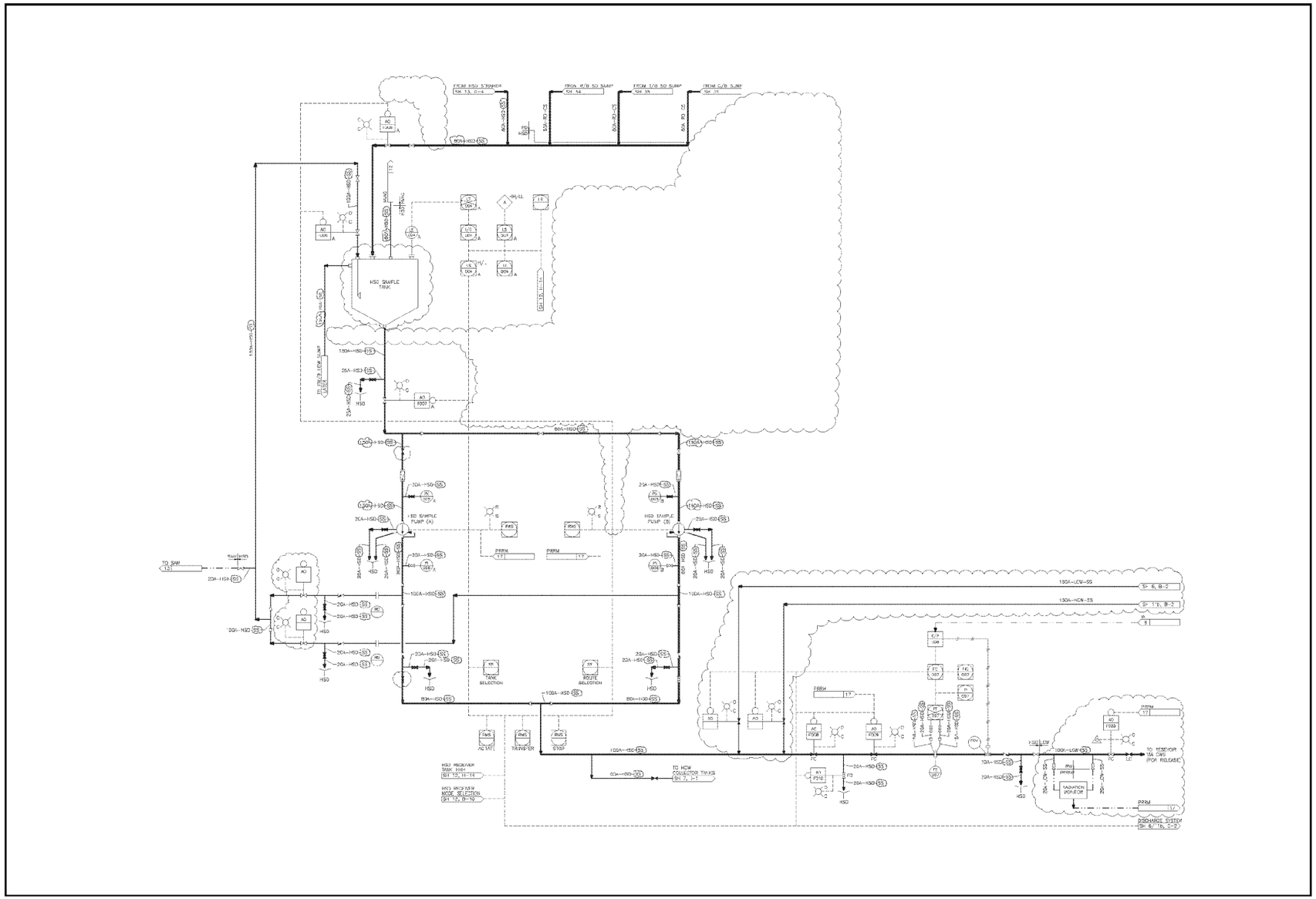

Figure 11.2-2 – Radwaste System (Sheet 14 OF 36)

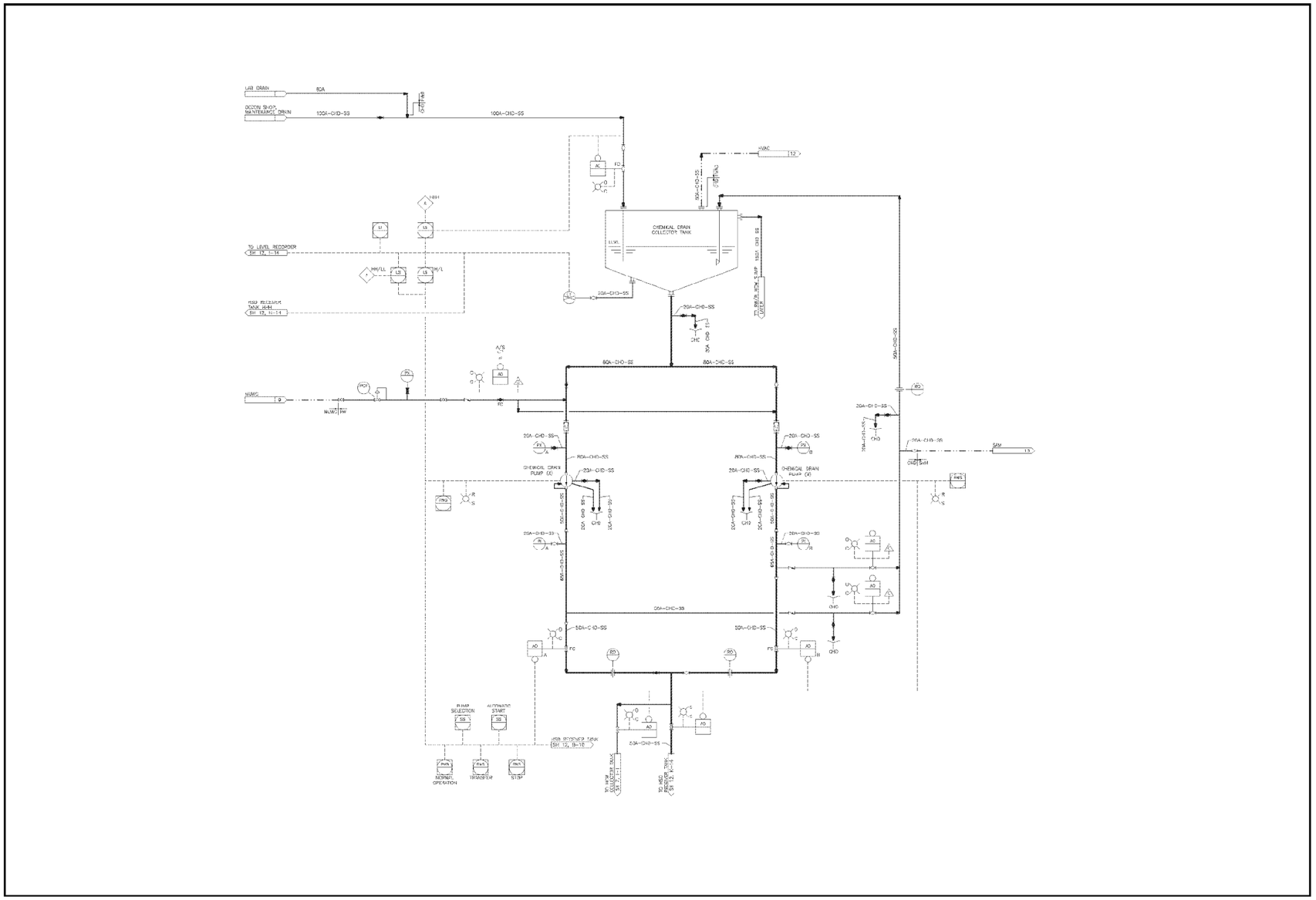

Figure 11.2-2 – Radwaste System (Sheet 14a OF 36)

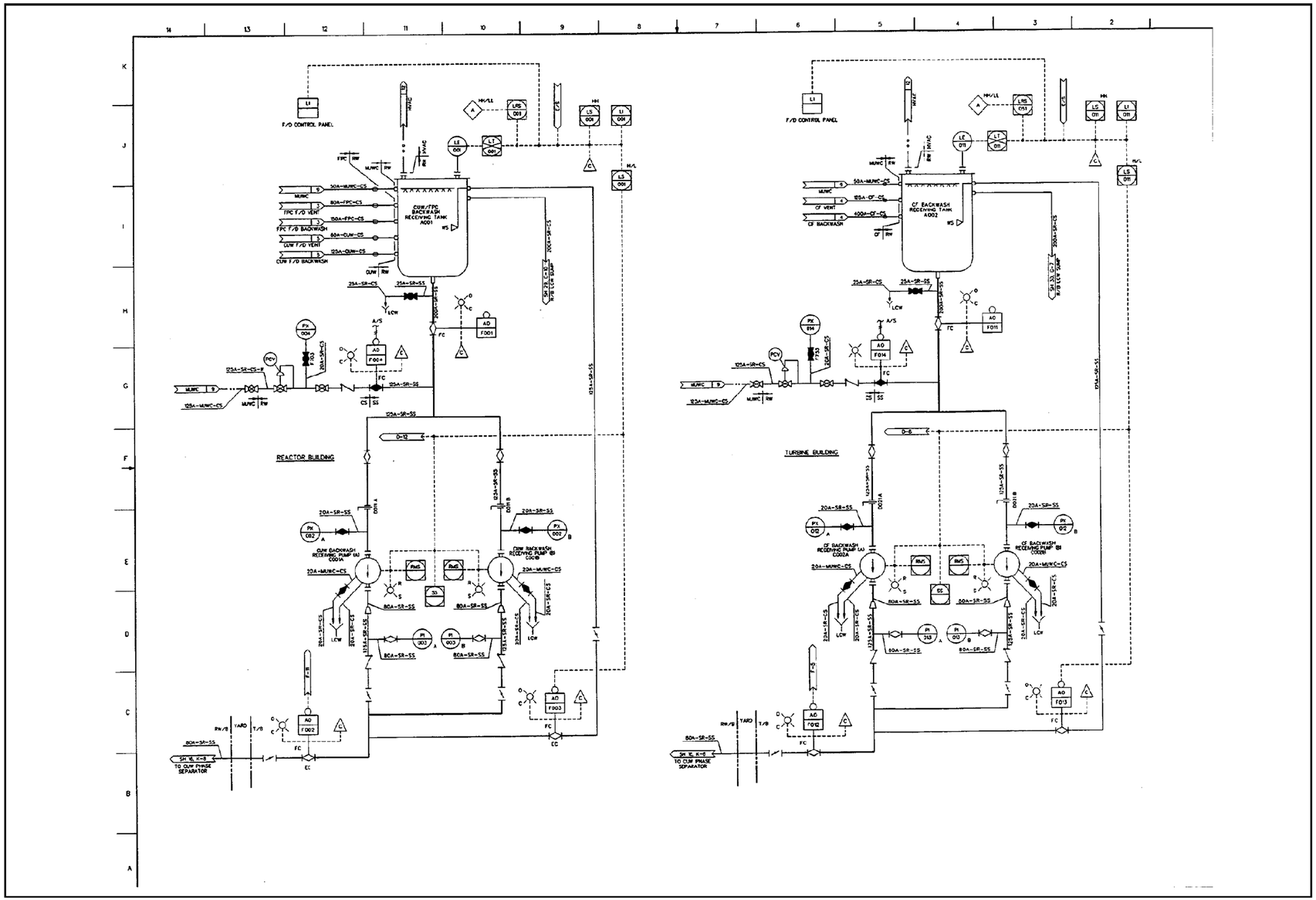

Figure 11.2-2 – Radwaste System (Sheet 15 OF 36)

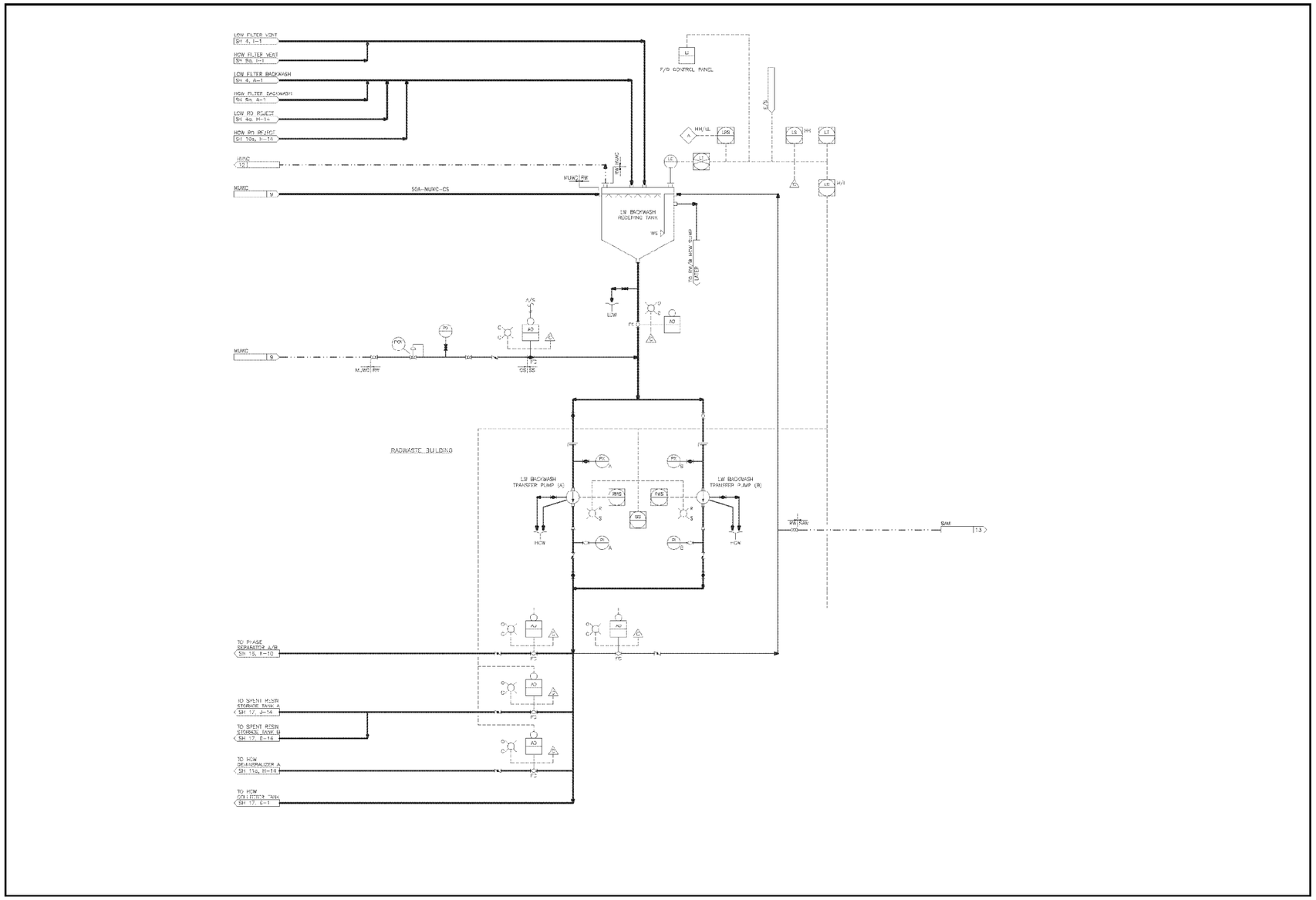

Figure 11.2-2 – Radwaste System (Sheet 15a OF 36)

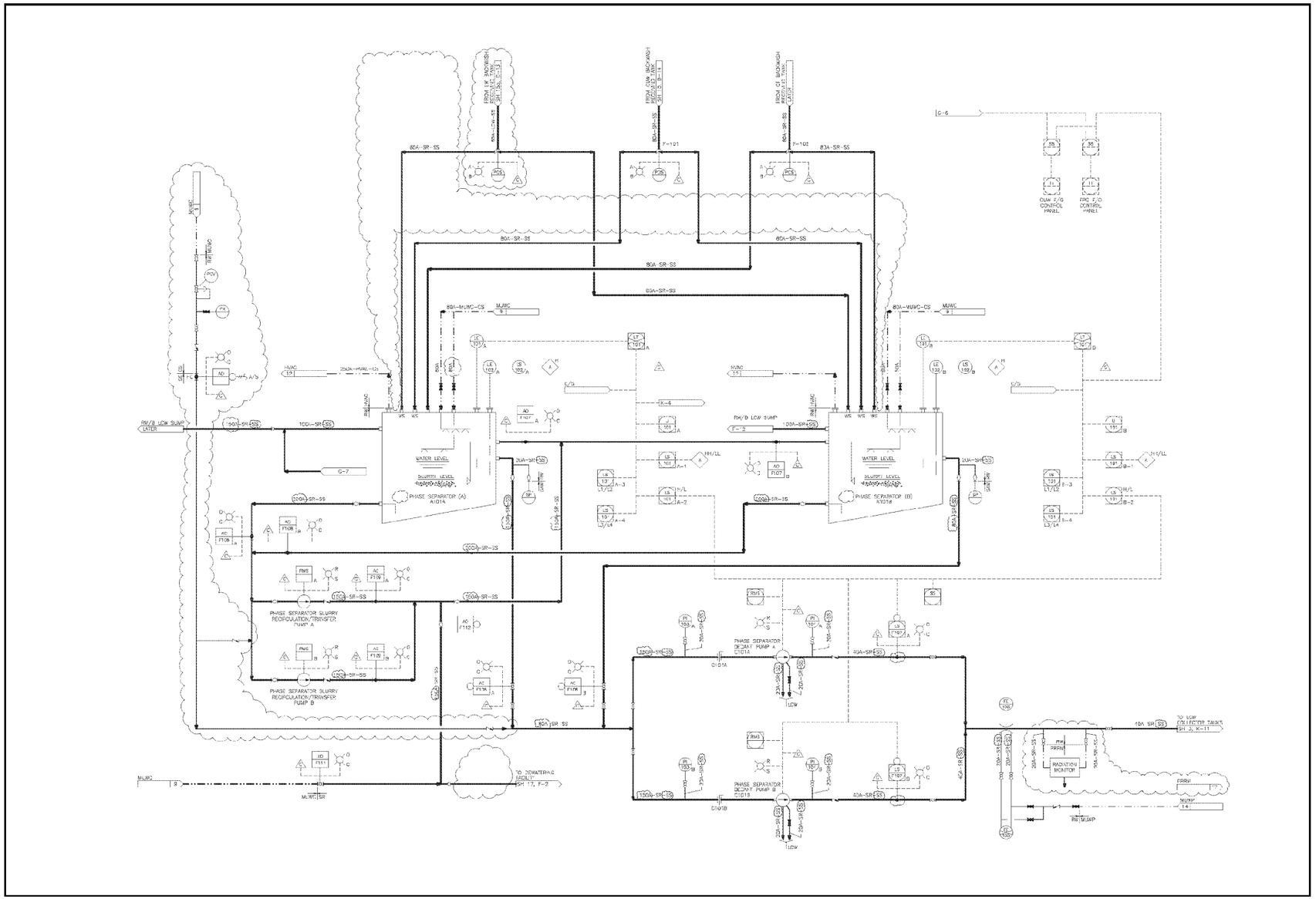

Figure 11.2-2 – Radwaste System (Sheet 16 OF 36)

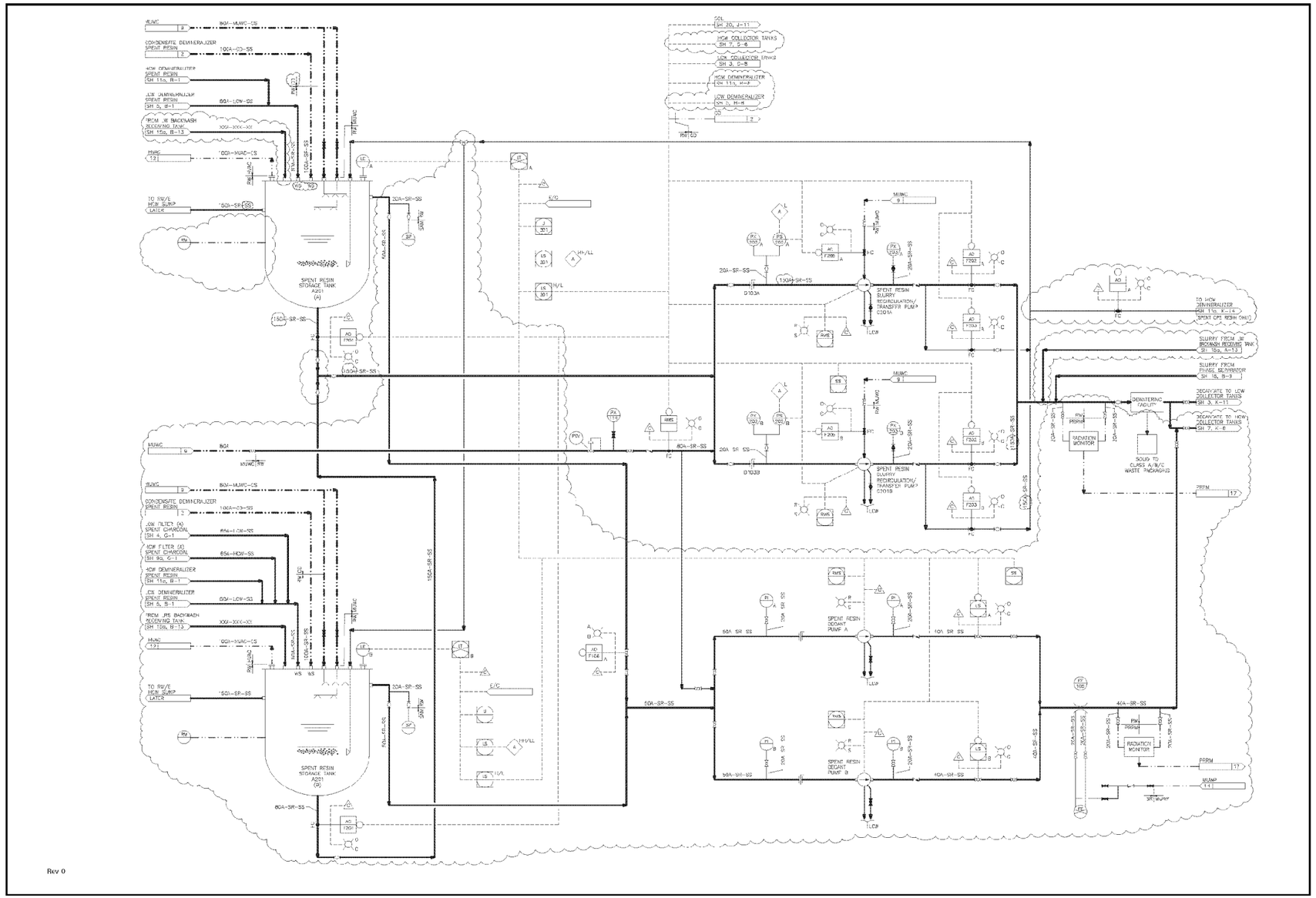

Figure 11.2-2 – Radwaste System (Sheet 17 OF 36)

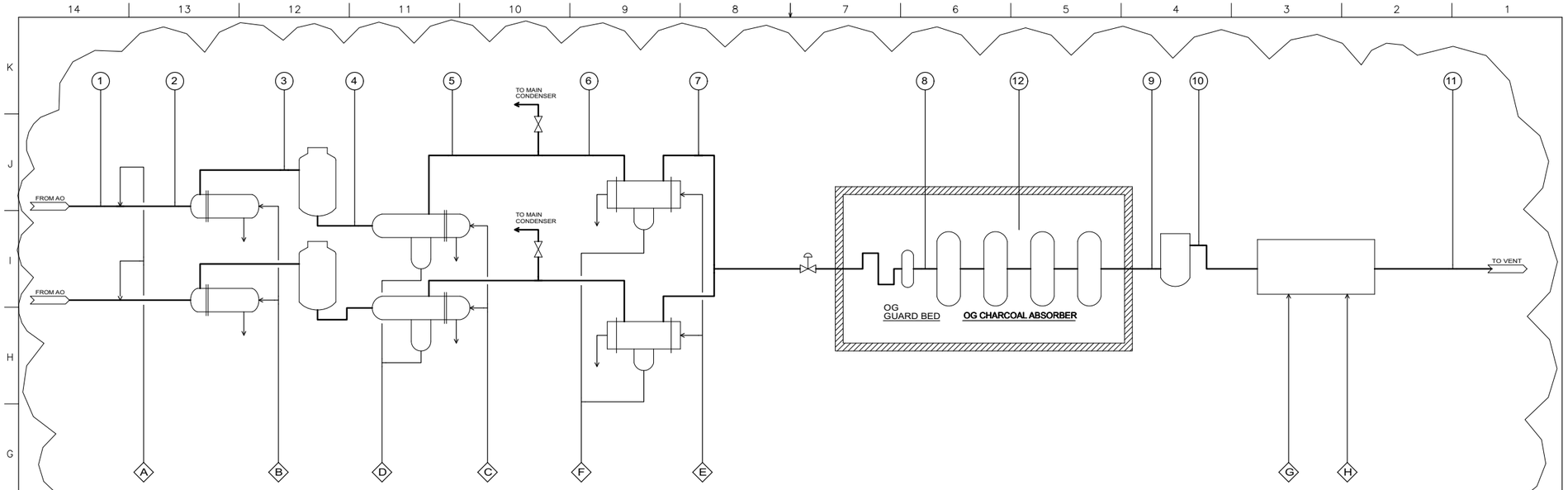

NORMAL OPERATION (DESIGN FLOW RATE)

CONTENTS	UNIT	1	2	3	4	5	6	7	8	9	10	11	12
TEMPERATURE	°C	105~148	105~148	150	~379	55	55	10	22~32	10~40	10~40	10~40	23~31
PRESSURE(MAX)	MPa [gage]	2.41~ -0.101	2.41~ -0.101	2.41~ -0.101	2.41~ -0.101	2.41~ -0.101	2.41~ -0.101	2.41~ -0.101	2.41~ -0.101	2.41~ -0.101	2.41~ -0.101	(0~)	~0
FLOW RATE	m³/h [normal]	7895	7895	7895	7764	57.1	57.1	48.8	48.8	48.8	48.8	52	
HYDROGEN	m³/h [normal]	262	262	262	(~0.01)	(~0.01)	(~0.01)	(~0.01)	(~0.01)	(~0.01)	(~0.01)	(~0.01)	
OXYGEN	m³/h [normal]	131	131	131	(~0.005)	(~0.005)	(~0.005)	(~0.005)	(~0.005)	(~0.005)	(~0.005)	(~0.005)	
AIR	m³/h [normal]	48.2	48.2	48.2	48.2	48.2	48.2	48.2	48.2	48.2	48.2	48.2	
STEAM	m³/h [normal]	7454	7454	7454	7716	(8.9)	(8.9)	(0.6)	(0.6)	(0.6)	(0.6)	(3.8)	

NORMAL OPERATION (MINIMUM AIR FLOW RATE)

CONTENTS	UNIT	1	2	3	4	5	6	7	8	9	10	11	12
TEMPERATURE	°C	105~148	105~148	150	~381	55	55	10	22~32	10~40	10~40	10~40	23~31
PRESSURE(MAX)	MPa [gage]	2.41~ -0.101	2.41~ -0.101	2.41~ -0.101	2.41~ -0.101	2.41~ -0.101	2.41~ -0.101	2.41~ -0.101	2.41~ -0.101	2.41~ -0.101	2.41~ -0.101	(0~)	~0
FLOW RATE	m³/h [normal]	7857	7857	7857	7726	11.8	11.8	10.1	10.1	10.1	10.1	10.8	
HYDROGEN	m³/h [normal]	262	262	262	(~0.01)	(~0.01)	(~0.01)	(~0.01)	(~0.01)	(~0.01)	(~0.01)	(~0.01)	
OXYGEN	m³/h [normal]	131	131	131	(~0.005)	(~0.005)	(~0.005)	(~0.005)	(~0.005)	(~0.005)	(~0.005)	(~0.005)	
AIR	m³/h [normal]	10	10	10	10	10	10	10	10	10	10	10	
STEAM	m³/h [normal]	7454	7454	7454	7716	(1.8)	(1.8)	(0.1)	(0.1)	(0.1)	(0.1)	(0.8)	

UTILITY (NORMAL OPERATION)

CONTENTS	UNIT	A	B	C	D	E	F	G	H
FLUID	-	AIR	STEAM	W	W	W	W	W	W
SYSTEM	-	IA	HS	TCW	---	HNCW	---	TCW	MUWP
TEMPERATURE	°C	---	166	41	---	7~12	---	41	---
PRESSURE	MPa [gage]	0.69 ~0.87	0.62	MAX1.37	(0.35~ -0.101)	MAX1.37	(0.35~ -0.101)	MAX1.37	MAX 1.37
FLOW RATE	-	1.7~48.2 Nm³/h	355 kg/h/unit	MIN 370 m³/h/unit	6.19 ton/h	5.3 m³/h/unit	6.7kg/h	MIN 7 m³/h/unit	0.15 m³/h

Figure 11.3-1 – Offgas System PFD (Sheet 1)

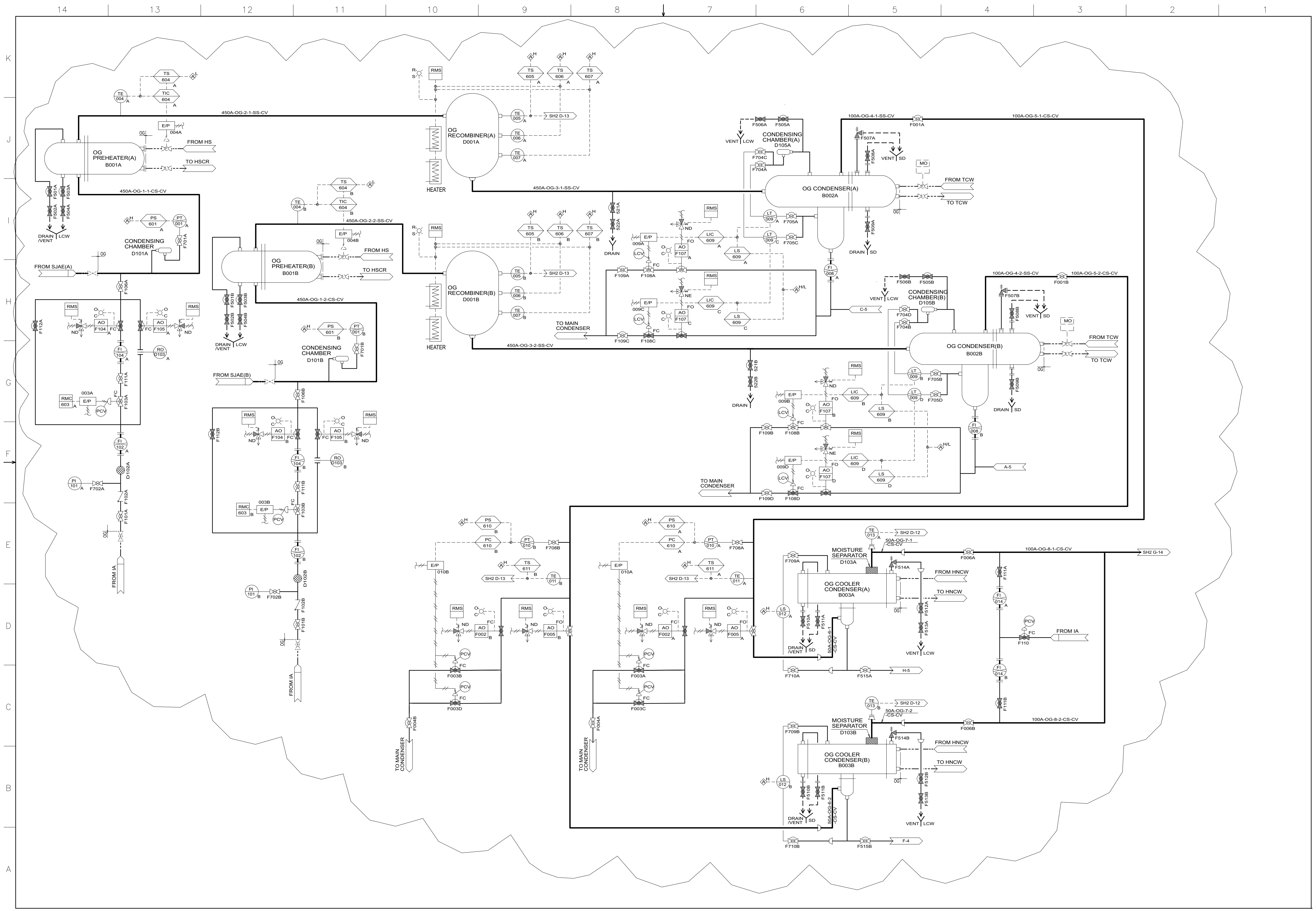

Figure 11.3-2 – Offgas System P&ID (Sheet 1 of 3)

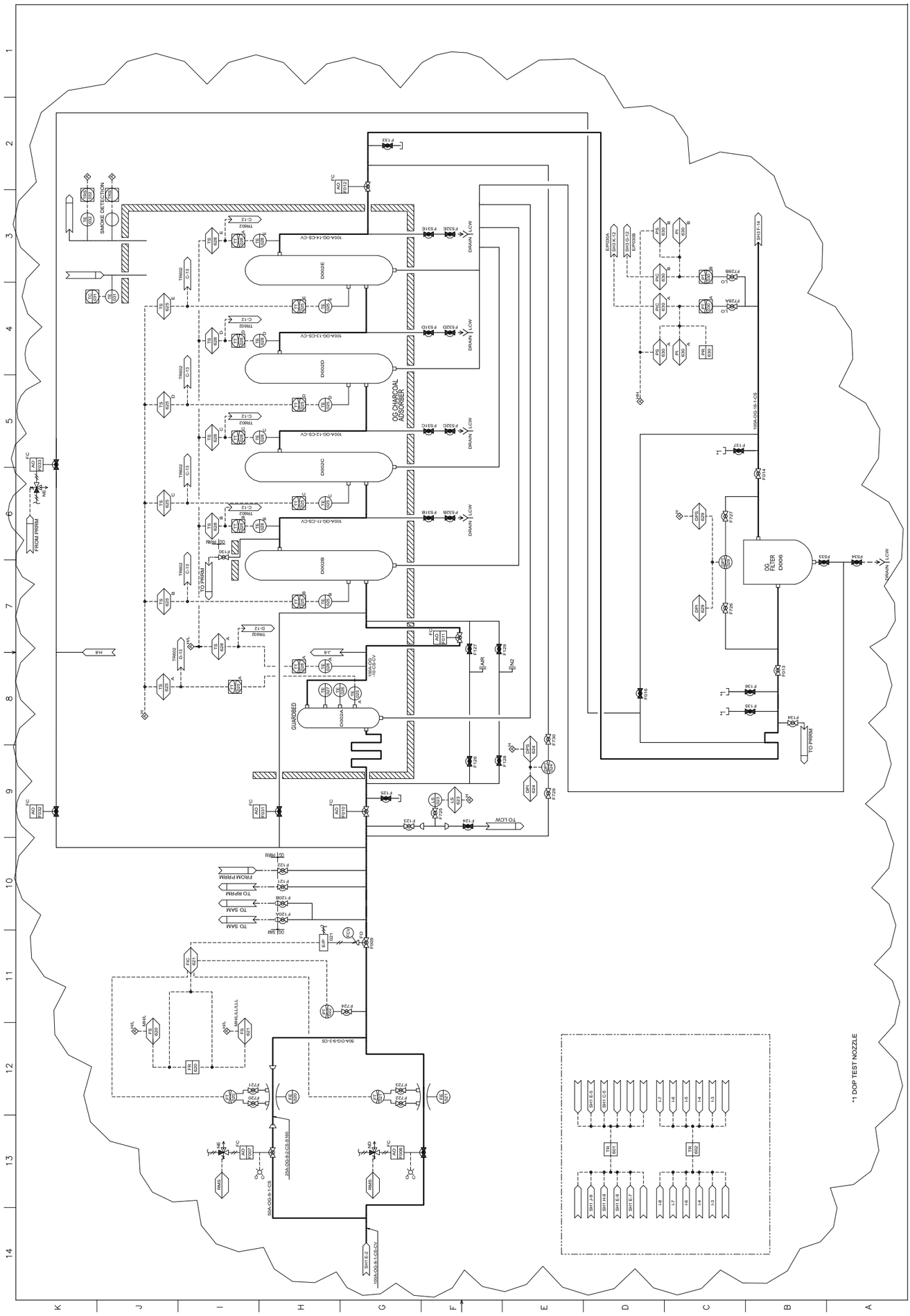

Figure 11.3-2 – Offgas System P&ID (Sheet 2 of 3)

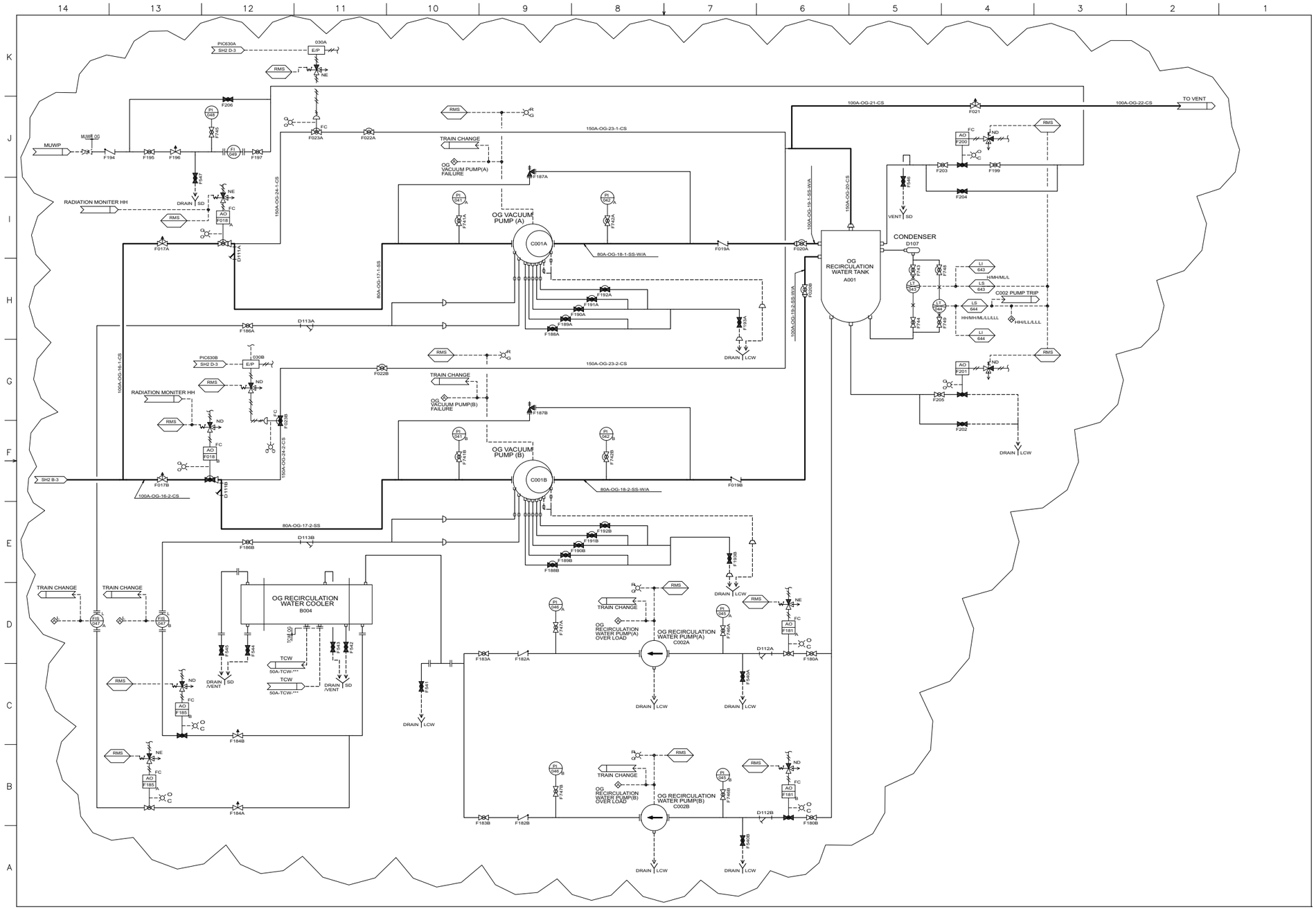

Figure 11.3-2 – Offgas System P&ID (Sheet 3 of 3)