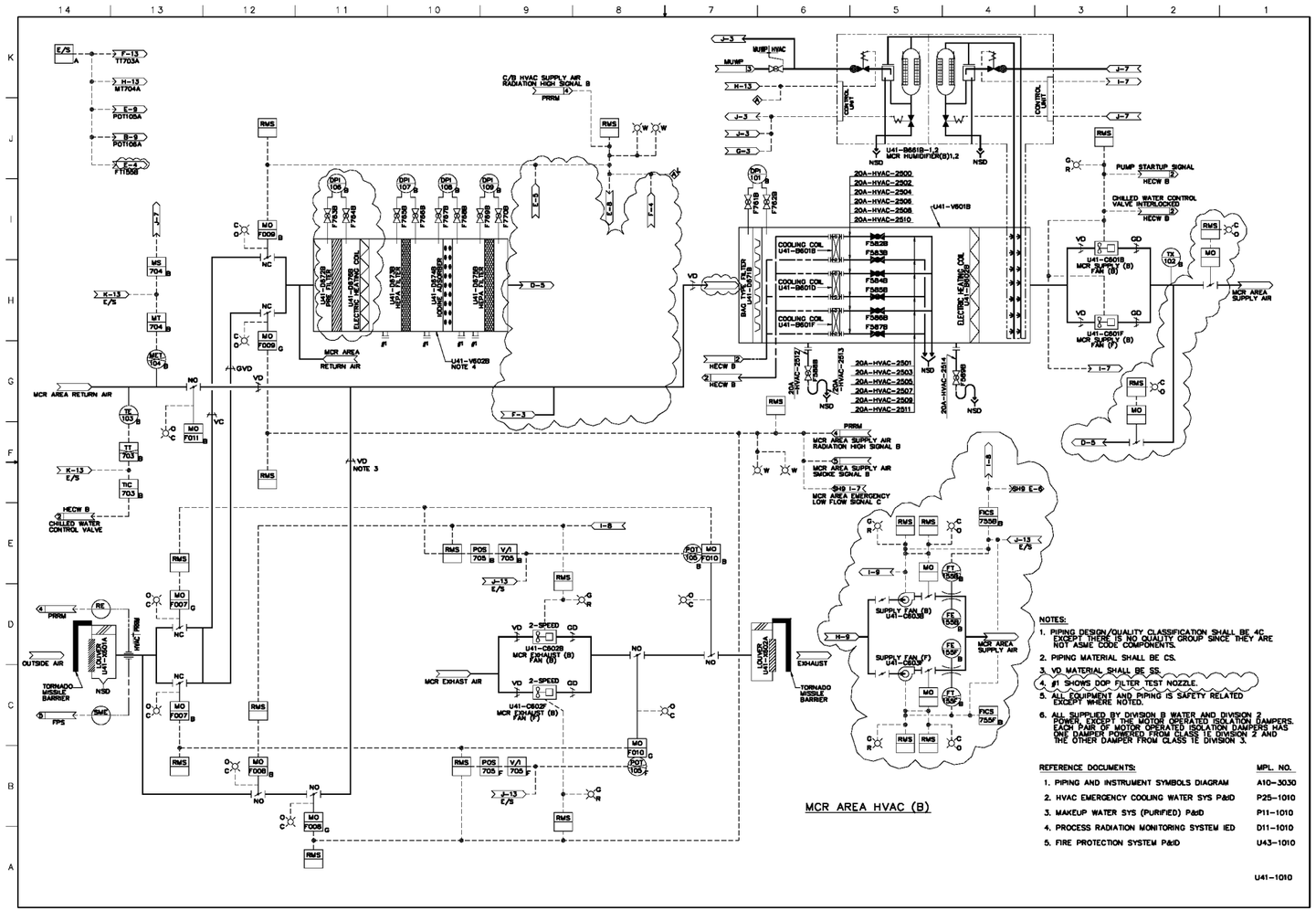


**Figure 9.4-1 – Control Building HVAC Flow Diagram (Sheet 1 of 5)**

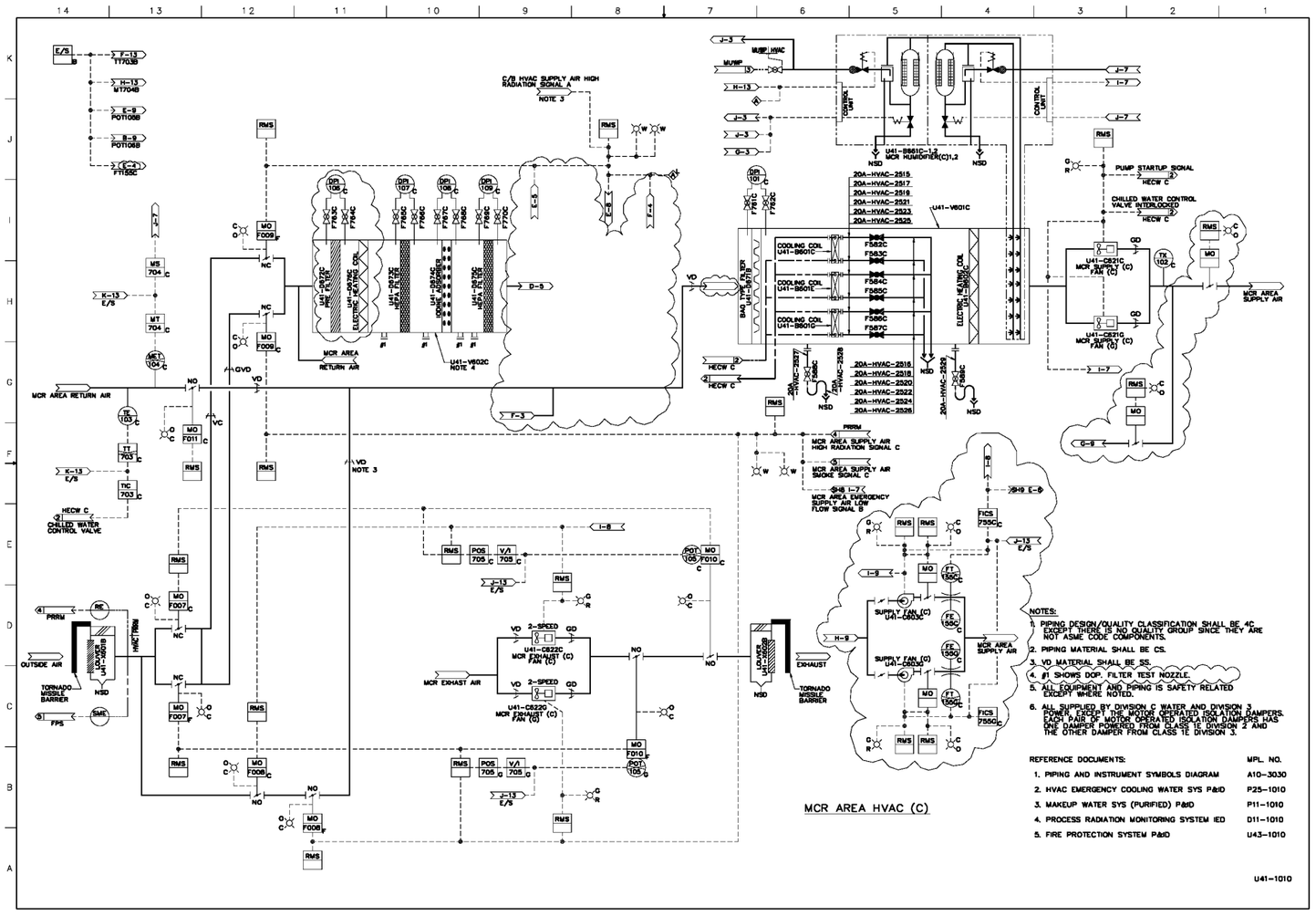


**Figure 9.4-1 – Control Building HVAC Flow Diagram (Sheet 2 of 5)**

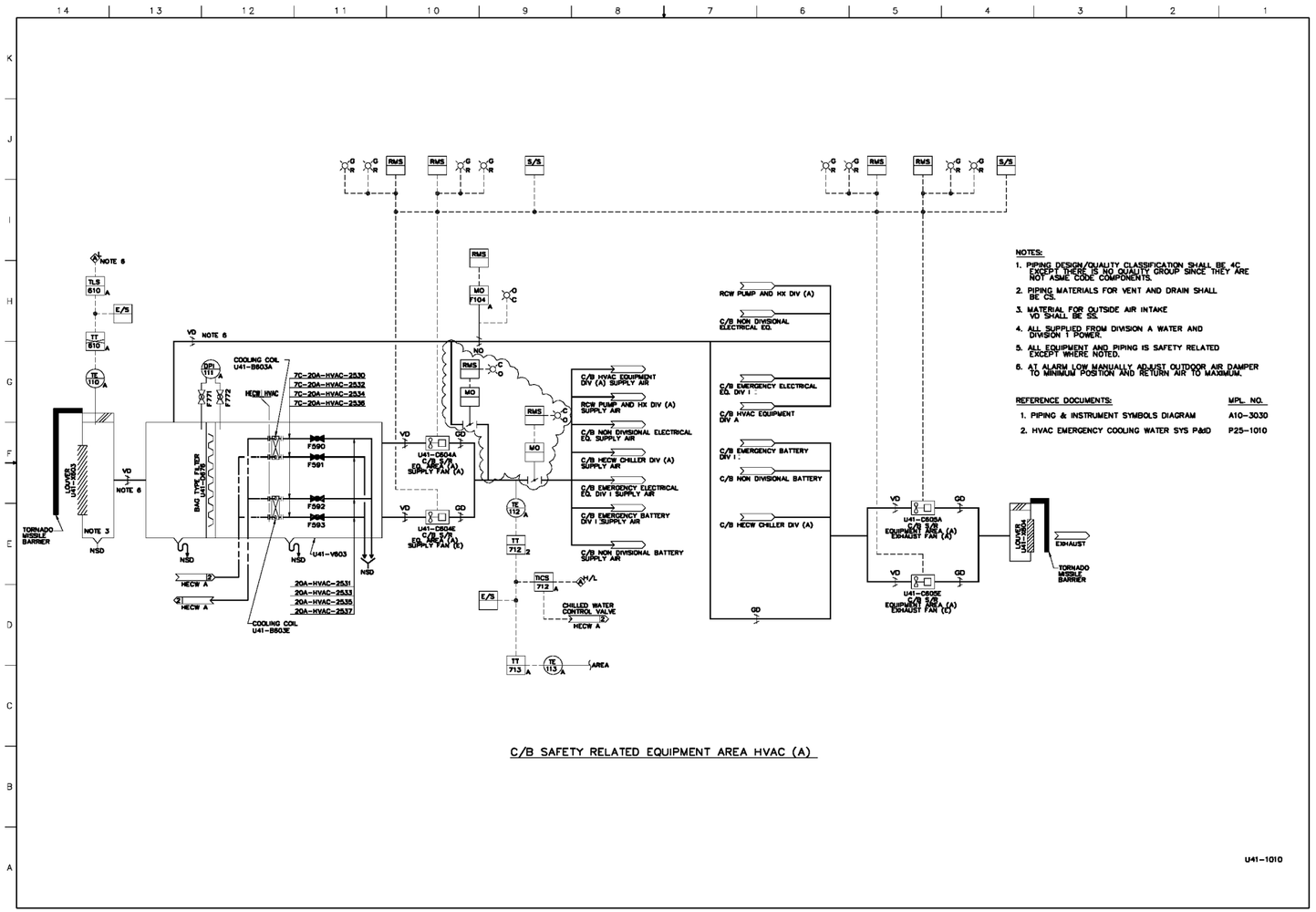


Figure 9.4-1 – Control Building HVAC Flow Diagram (Sheet 3 of 5)

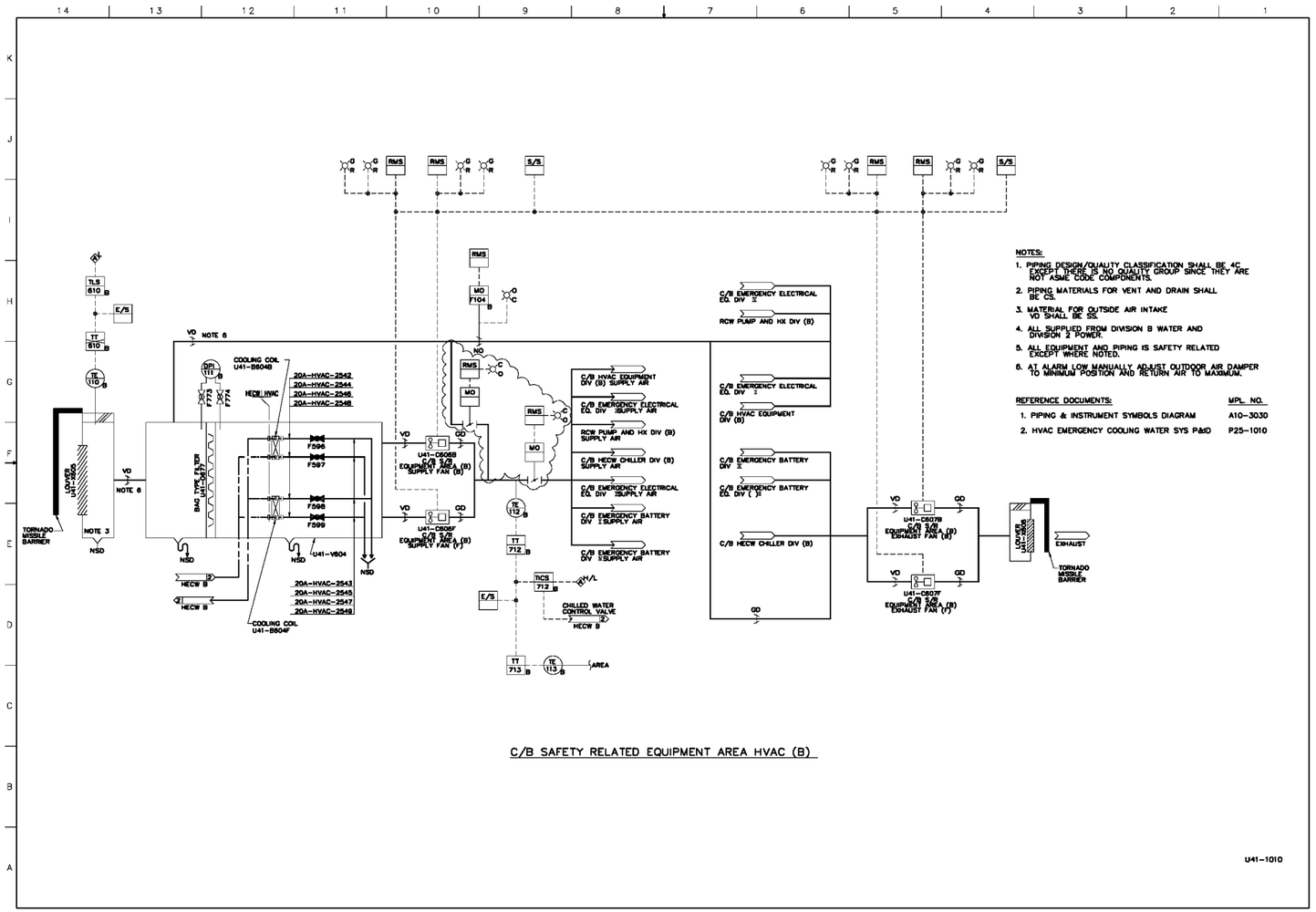


Figure 9.4-1 – Control Building HVAC Flow Diagram (Sheet 4 of 5)

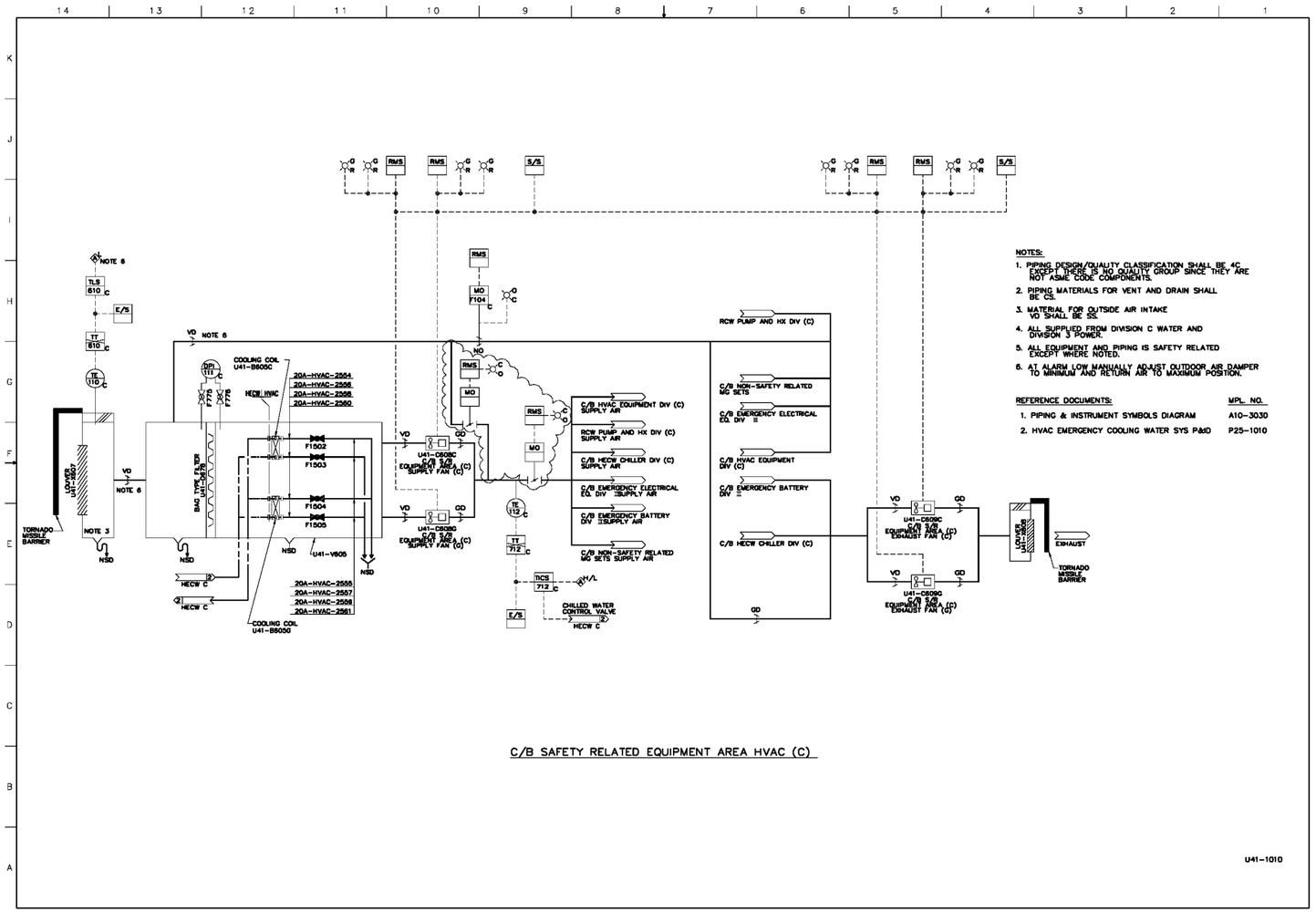


Figure 9.4-1 – Control Building HVAC Flow Diagram (Sheet 5 of 5)

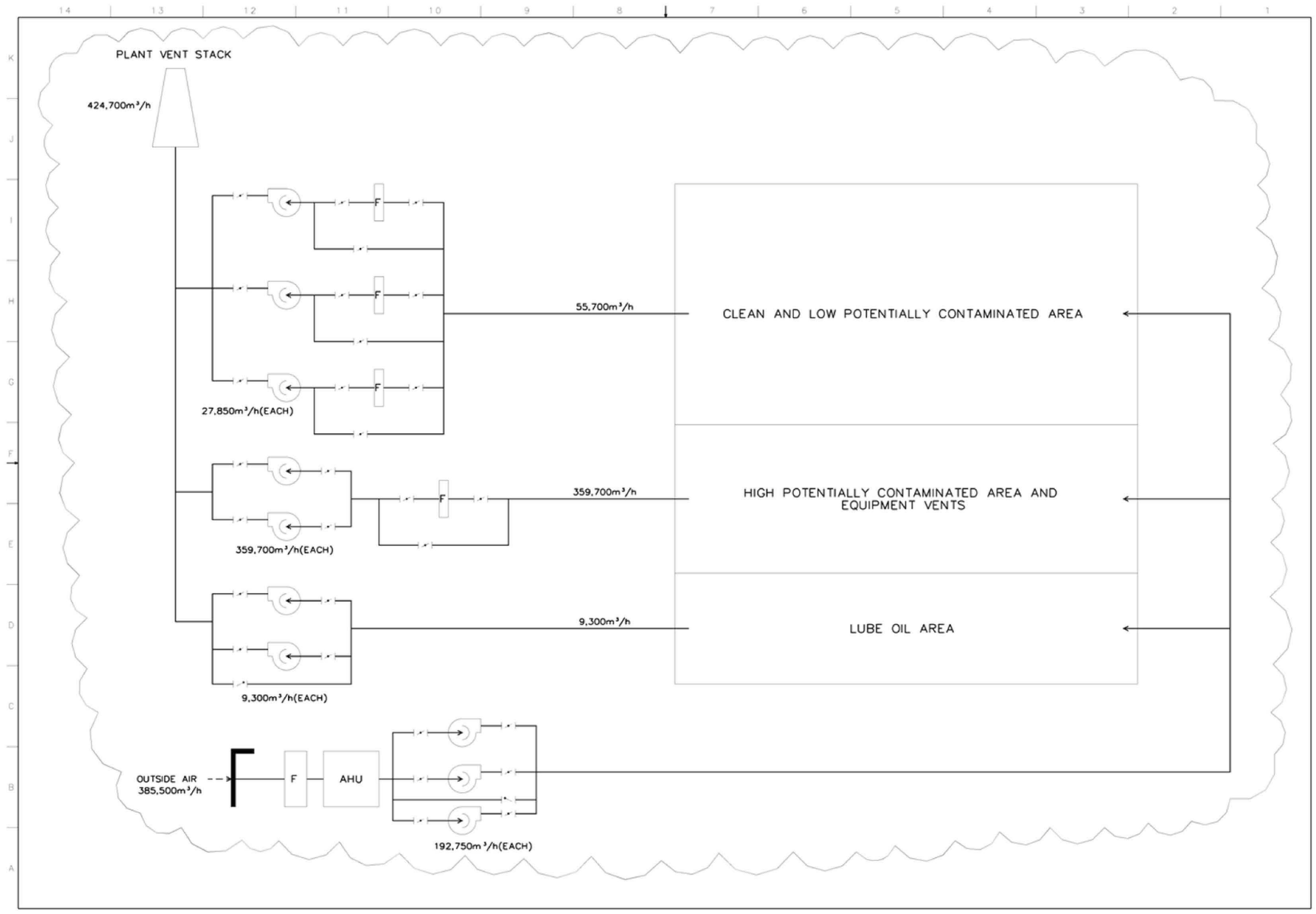


**Figure 9.4-2a – Turbine Building Ventilation System Air Flow Diagram**

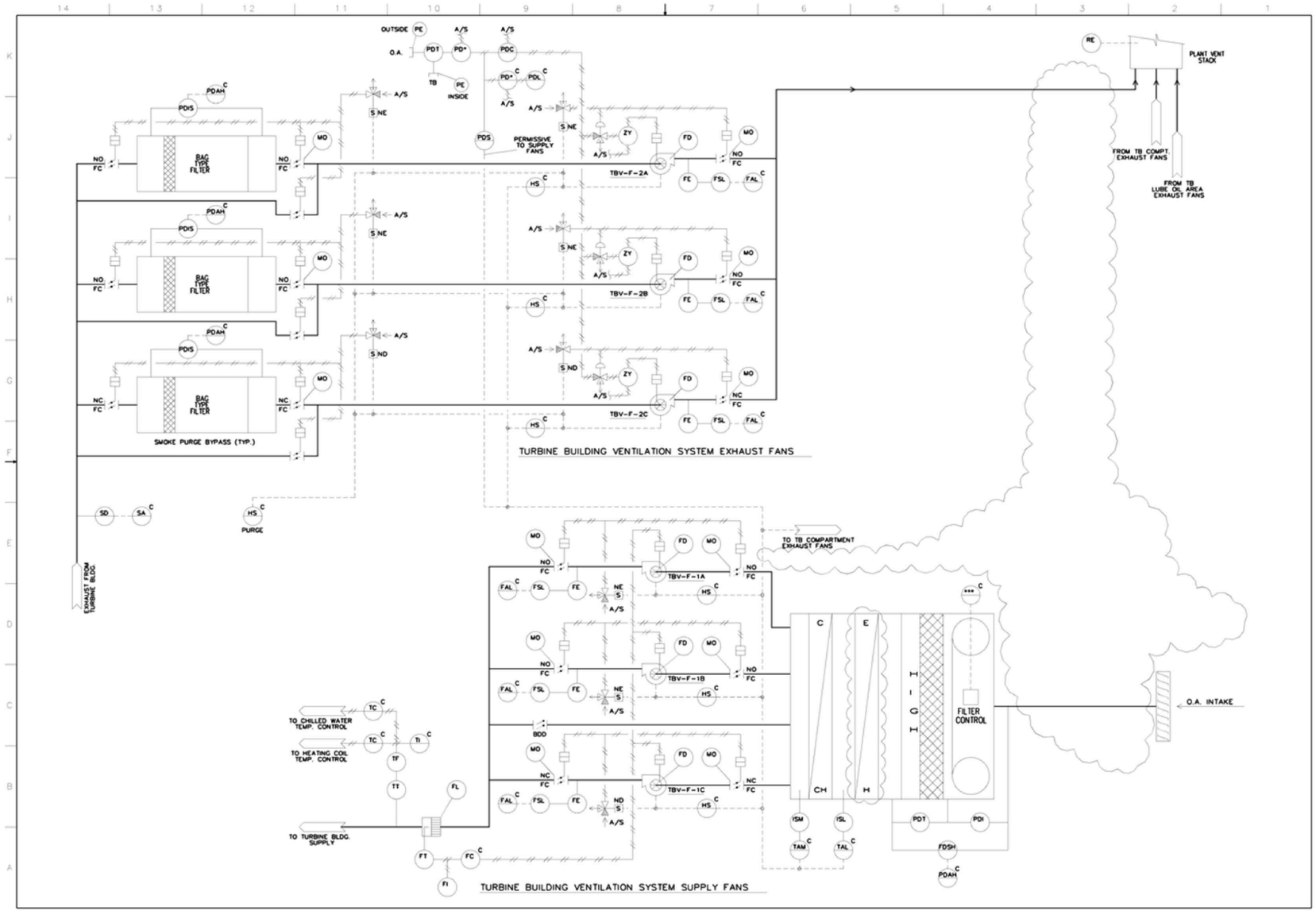


**Figure 9.4-2b – Turbine Building Ventilation System Control Diagram (Sheet 1 of 2)**

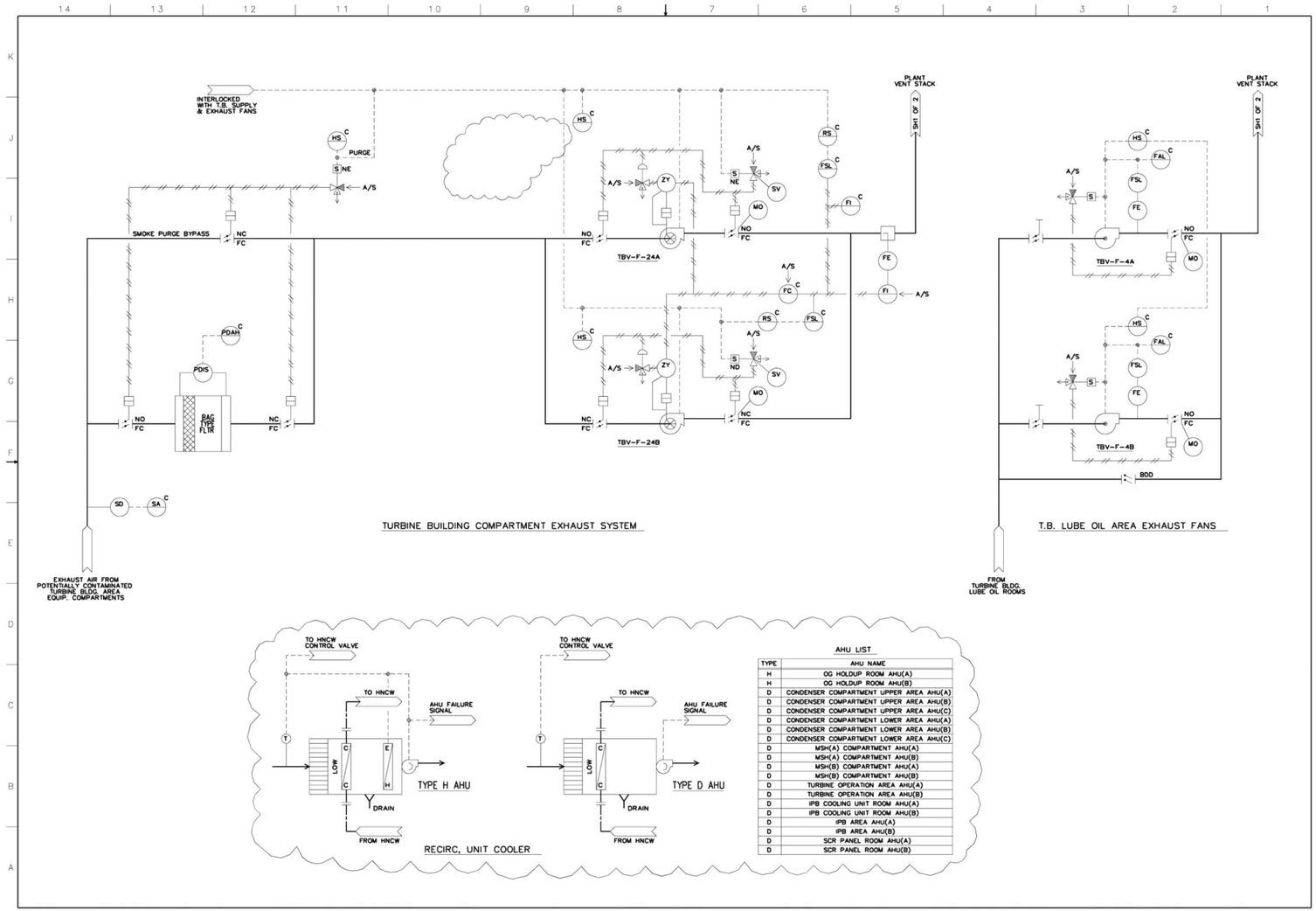


| TYPE | AHU NAME |
|---|---|
| H | OG HOLDUP ROOM AHU(A) |
| H | OG HOLDUP ROOM AHU(B) |
| D | CONDENSER COMPARTMENT UPPER AREA AHU(A) |
| D | CONDENSER COMPARTMENT UPPER AREA AHU(B) |
| D | CONDENSER COMPARTMENT UPPER AREA AHU(C) |
| D | CONDENSER COMPARTMENT LOWER AREA AHU(A) |
| D | CONDENSER COMPARTMENT LOWER AREA AHU(B) |
| D | CONDENSER COMPARTMENT LOWER AREA AHU(C) |
| D | MSH(A) COMPARTMENT AHU(A) |
| D | MSH(A) COMPARTMENT AHU(B) |
| D | MSH(B) COMPARTMENT AHU(A) |
| D | MSH(B) COMPARTMENT AHU(B) |
| D | TURBINE OPERATION AREA AHU(A) |
| D | TURBINE OPERATION AREA AHU(B) |
| D | IPB COOLING UNIT ROOM AHU(A) |
| D | IPB COOLING UNIT ROOM AHU(B) |
| D | IPB AREA AHU(A) |
| D | IPB AREA AHU(B) |
| D | SCR PANEL ROOM AHU(A) |
| D | SCR PANEL ROOM AHU(B) |

**Figure 9.4-2b – Turbine Building Ventilation System Control Diagram (Sheet 2 of 2)**

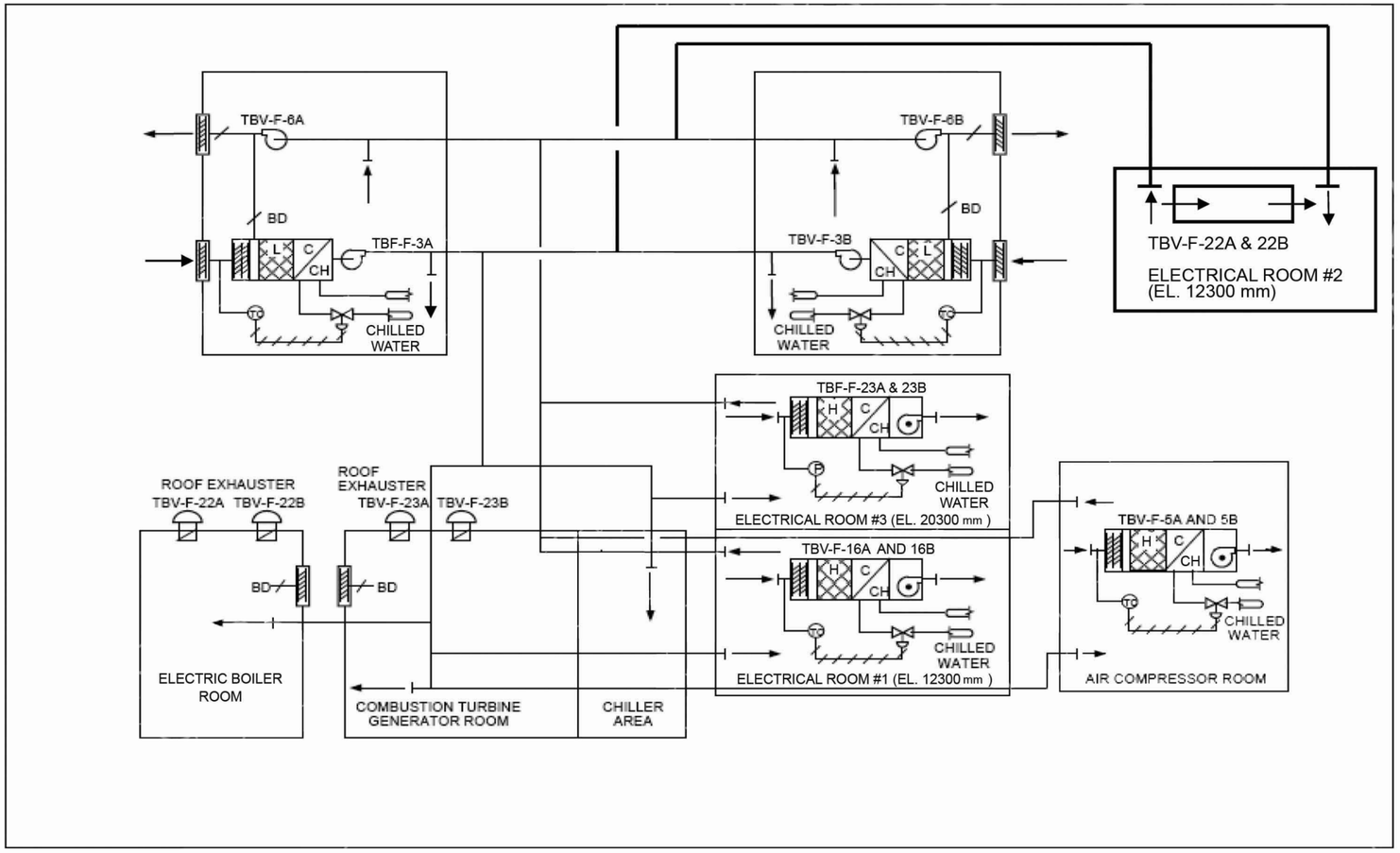


**Figure 9.4-2c – Electrical Building HVAC System Diagram Turbine Building Electrical Equipment Areas (EEA) HVAC System Diagram**

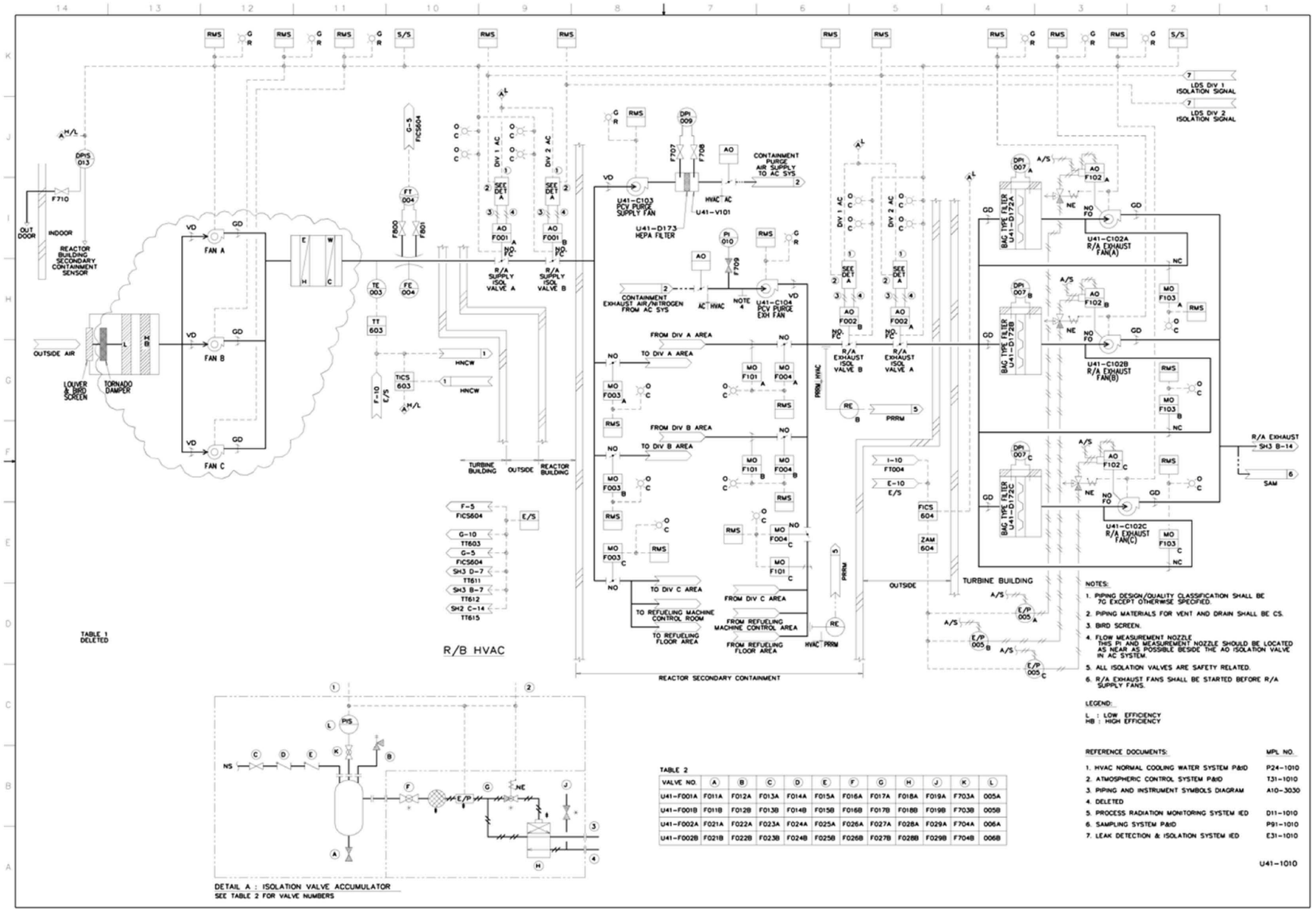


TABLE 2

| VALVE NO. | A | B | C | D | E | F | G | H | J | K | L |
|---|---|---|---|---|---|---|---|---|---|---|---|
| U41-F001A | F011A | F012A | F013A | F014A | F015A | F016A | F017A | F018A | F019A | F703A | 005A |
| U41-F001B | F011B | F012B | F013B | F014B | F015B | F016B | F017B | F018B | F019B | F703B | 005B |
| U41-F002A | F021A | F022A | F023A | F024A | F025A | F026A | F027A | F028A | F029A | F704A | 006A |
| U41-F002B | F021B | F022B | F023B | F024B | F025B | F026B | F027B | F028B | F029B | F704B | 006B |

**Figure 9.4-3 – Secondary Containment Hvac System P&ID (Sheet 1 of 3)**

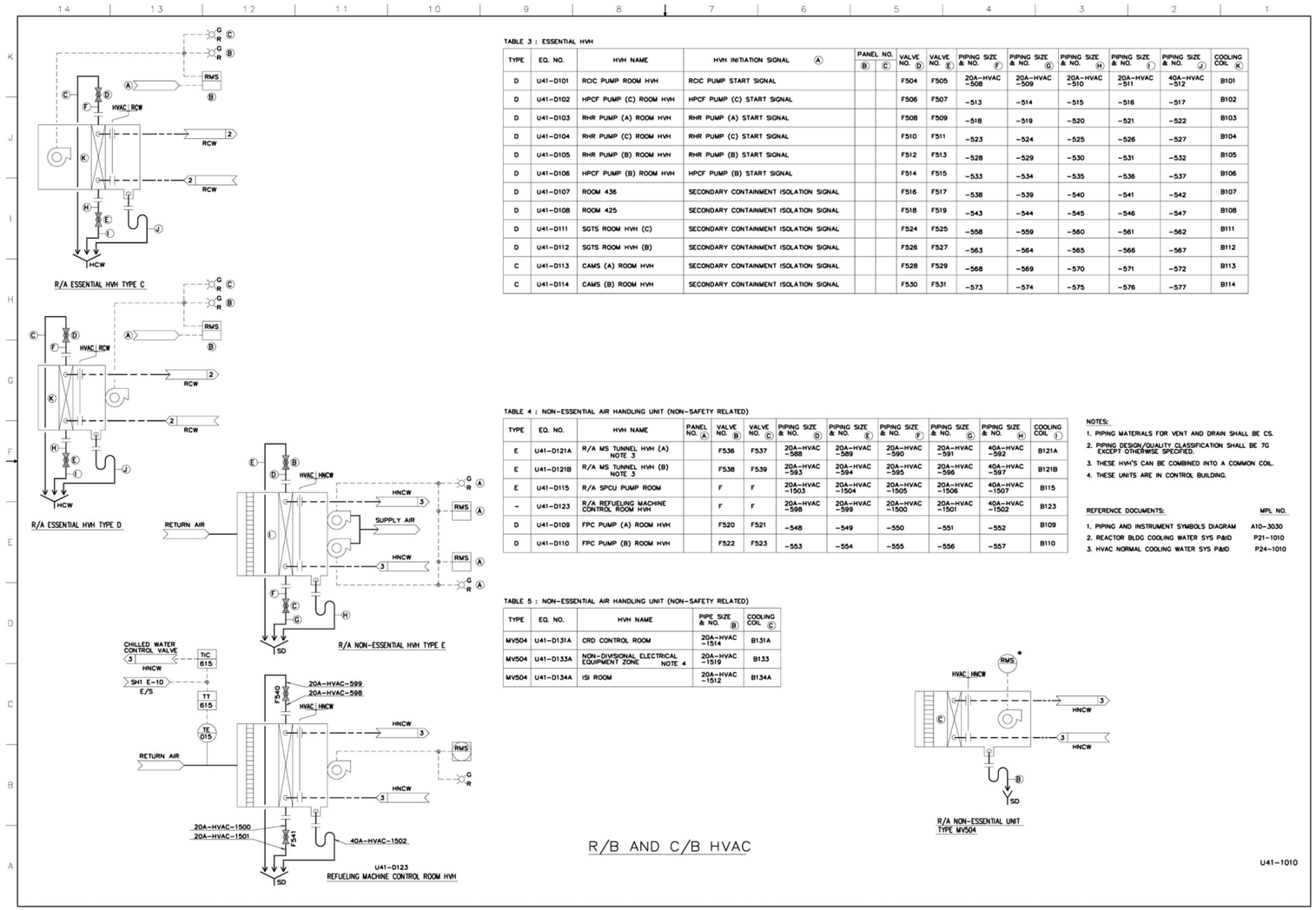


TABLE 3 : ESSENTIAL HVH

| TYPE | EQ. NO. | HVH NAME | HVH INITIATION SIGNAL (A) | PANEL NO. (B) | PANEL NO. (C) | VALVE NO. (D) | VALVE NO. (E) | PIPING SIZE & NO. (F) | PIPING SIZE & NO. (G) | PIPING SIZE & NO. (H) | PIPING SIZE & NO. (I) | PIPING SIZE & NO. (J) | COOLING COIL (K) |
|---|---|---|---|---|---|---|---|---|---|---|---|---|---|
| D | U41-D101 | RCIC PUMP ROOM HVH | RCIC PUMP START SIGNAL | | | F504 | F505 | 20A-HVAC -508 | 20A-HVAC -509 | 20A-HVAC -510 | 20A-HVAC -511 | 40A-HVAC -512 | B101 |
| D | U41-D102 | HPCF PUMP (C) ROOM HVH | HPCF PUMP (C) START SIGNAL | | | F506 | F507 | -513 | -514 | -515 | -516 | -517 | B102 |
| D | U41-D103 | RHR PUMP (A) ROOM HVH | RHR PUMP (A) START SIGNAL | | | F508 | F509 | -518 | -519 | -520 | -521 | -522 | B103 |
| D | U41-D104 | RHR PUMP (C) ROOM HVH | RHR PUMP (C) START SIGNAL | | | F510 | F511 | -523 | -524 | -525 | -526 | -527 | B104 |
| D | U41-D105 | RHR PUMP (B) ROOM HVH | RHR PUMP (B) START SIGNAL | | | F512 | F513 | -528 | -529 | -530 | -531 | -532 | B105 |
| D | U41-D106 | HPCF PUMP (B) ROOM HVH | HPCF PUMP (B) START SIGNAL | | | F514 | F515 | -533 | -534 | -535 | -536 | -537 | B106 |
| D | U41-D107 | ROOM 436 | SECONDARY CONTAINMENT ISOLATION SIGNAL | | | F516 | F517 | -538 | -539 | -540 | -541 | -542 | B107 |
| D | U41-D108 | ROOM 425 | SECONDARY CONTAINMENT ISOLATION SIGNAL | | | F518 | F519 | -543 | -544 | -545 | -546 | -547 | B108 |
| D | U41-D111 | SGTS ROOM HVH (C) | SECONDARY CONTAINMENT ISOLATION SIGNAL | | | F524 | F525 | -558 | -559 | -560 | -561 | -562 | B111 |
| D | U41-D112 | SGTS ROOM HVH (B) | SECONDARY CONTAINMENT ISOLATION SIGNAL | | | F526 | F527 | -563 | -564 | -565 | -566 | -567 | B112 |
| C | U41-D113 | CAMS (A) ROOM HVH | SECONDARY CONTAINMENT ISOLATION SIGNAL | | | F528 | F529 | -568 | -569 | -570 | -571 | -572 | B113 |
| C | U41-D114 | CAMS (B) ROOM HVH | SECONDARY CONTAINMENT ISOLATION SIGNAL | | | F530 | F531 | -573 | -574 | -575 | -576 | -577 | B114 |

TABLE 4 : NON-ESSENTIAL AIR HANDLING UNIT (NON-SAFETY RELATED)

| TYPE | EQ. NO. | HVH NAME | PANEL NO. (A) | VALVE NO. (B) | VALVE NO. (C) | PIPING SIZE & NO. (D) | PIPING SIZE & NO. (E) | PIPING SIZE & NO. (F) | PIPING SIZE & NO. (G) | PIPING SIZE & NO. (H) | COOLING COIL (I) |
|---|---|---|---|---|---|---|---|---|---|---|---|
| E | U41-D121A | R/A MS TUNNEL HVH (A) NOTE 3 | | F536 | F537 | 20A-HVAC -588 | 20A-HVAC -589 | 20A-HVAC -590 | 20A-HVAC -591 | 40A-HVAC -592 | B121A |
| E | U41-D121B | R/A MS TUNNEL HVH (B) NOTE 3 | | F538 | F539 | 20A-HVAC -593 | 20A-HVAC -594 | 20A-HVAC -595 | 20A-HVAC -596 | 40A-HVAC -597 | B121B |
| E | U41-D115 | R/A SPCU PUMP ROOM | | F | F | 20A-HVAC -1503 | 20A-HVAC -1504 | 20A-HVAC -1505 | 20A-HVAC -1506 | 40A-HVAC -1507 | B115 |
| - | U41-D123 | R/A REFUELING MACHINE CONTROL ROOM HVH | | F | F | 20A-HVAC -598 | 20A-HVAC -599 | 20A-HVAC -1500 | 20A-HVAC -1501 | 40A-HVAC -1502 | B123 |
| D | U41-D109 | FPC PUMP (A) ROOM HVH | | F520 | F521 | -548 | -549 | -550 | -551 | -552 | B109 |
| D | U41-D110 | FPC PUMP (B) ROOM HVH | | F522 | F523 | -553 | -554 | -555 | -556 | -557 | B110 |

NOTES:

1. PIPING MATERIALS FOR VENT AND DRAIN SHALL BE CS.
2. PIPING DESIGN/QUALITY CLASSIFICATION SHALL BE 7G EXCEPT OTHERWISE SPECIFIED.
3. THESE HVH'S CAN BE COMBINED INTO A COMMON COIL.
4. THESE UNITS ARE IN CONTROL BUILDING.

REFERENCE DOCUMENTS:

| | MPL NO. |
|---|---|
| 1. PIPING AND INSTRUMENT SYMBOLS DIAGRAM | A10-3030 |
| 2. REACTOR BLDG COOLING WATER SYS P&ID | P21-1010 |
| 3. HVAC NORMAL COOLING WATER SYS P&ID | P24-1010 |

TABLE 5 : NON-ESSENTIAL AIR HANDLING UNIT (NON-SAFETY RELATED)

| TYPE | EQ. NO. | HVH NAME | PIPE SIZE & NO. (B) | COOLING COIL (C) |
|---|---|---|---|---|
| MV504 | U41-D131A | CRD CONTROL ROOM | 20A-HVAC -1514 | B131A |
| MV504 | U41-D133A | NON-DIVISIONAL ELECTRICAL EQUIPMENT ZONE NOTE 4 | 20A-HVAC -1519 | B133 |
| MV504 | U41-D134A | ISI ROOM | 20A-HVAC -1512 | B134A |

**Figure 9.4-3 – Secondary Containment Hvac System P&ID (Sheet 2 of 3)**

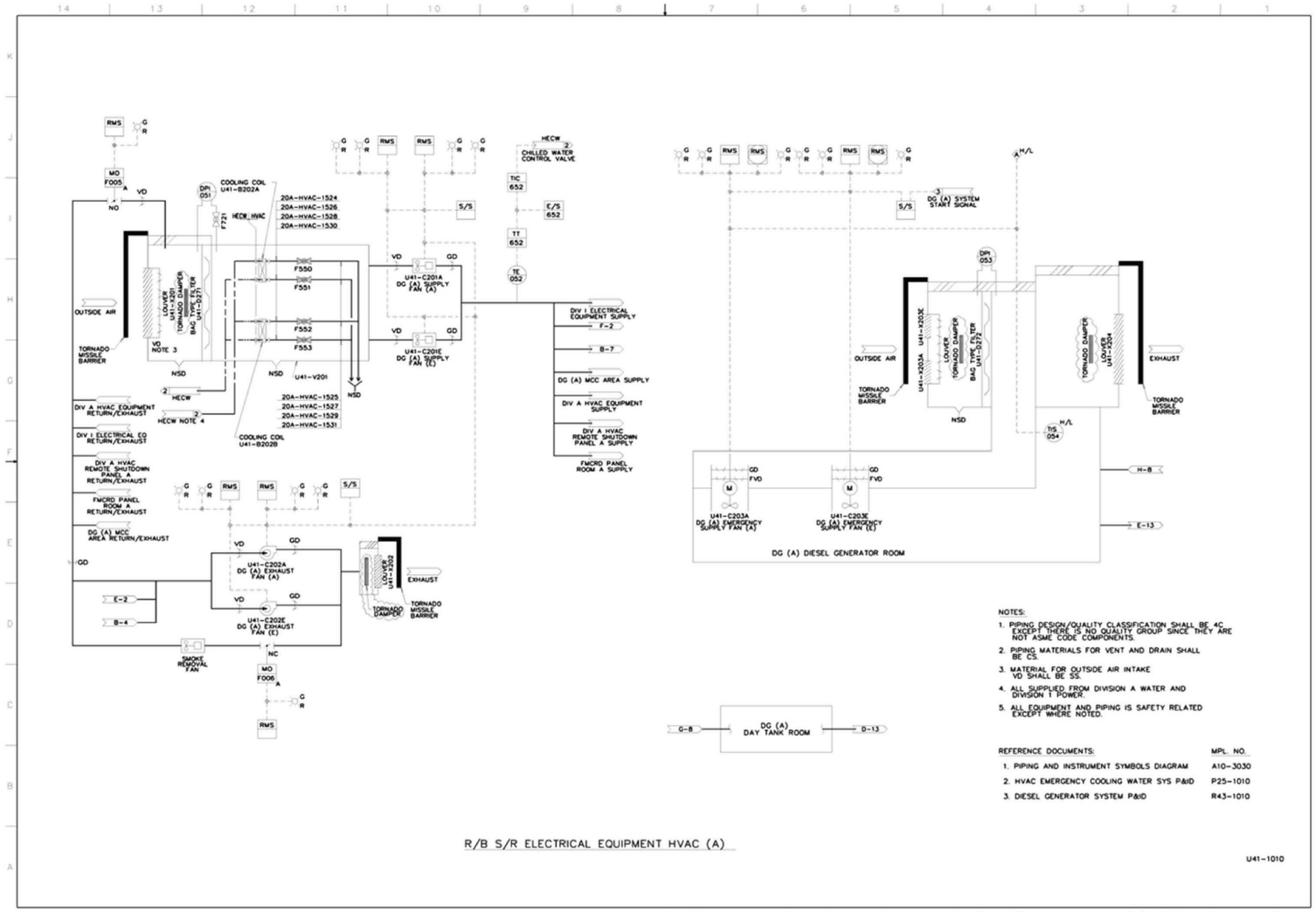


**Figure 9.4-4 – R/B Safety-related Electrical Equipment Hvac System (Sheet 1 Of 3)**

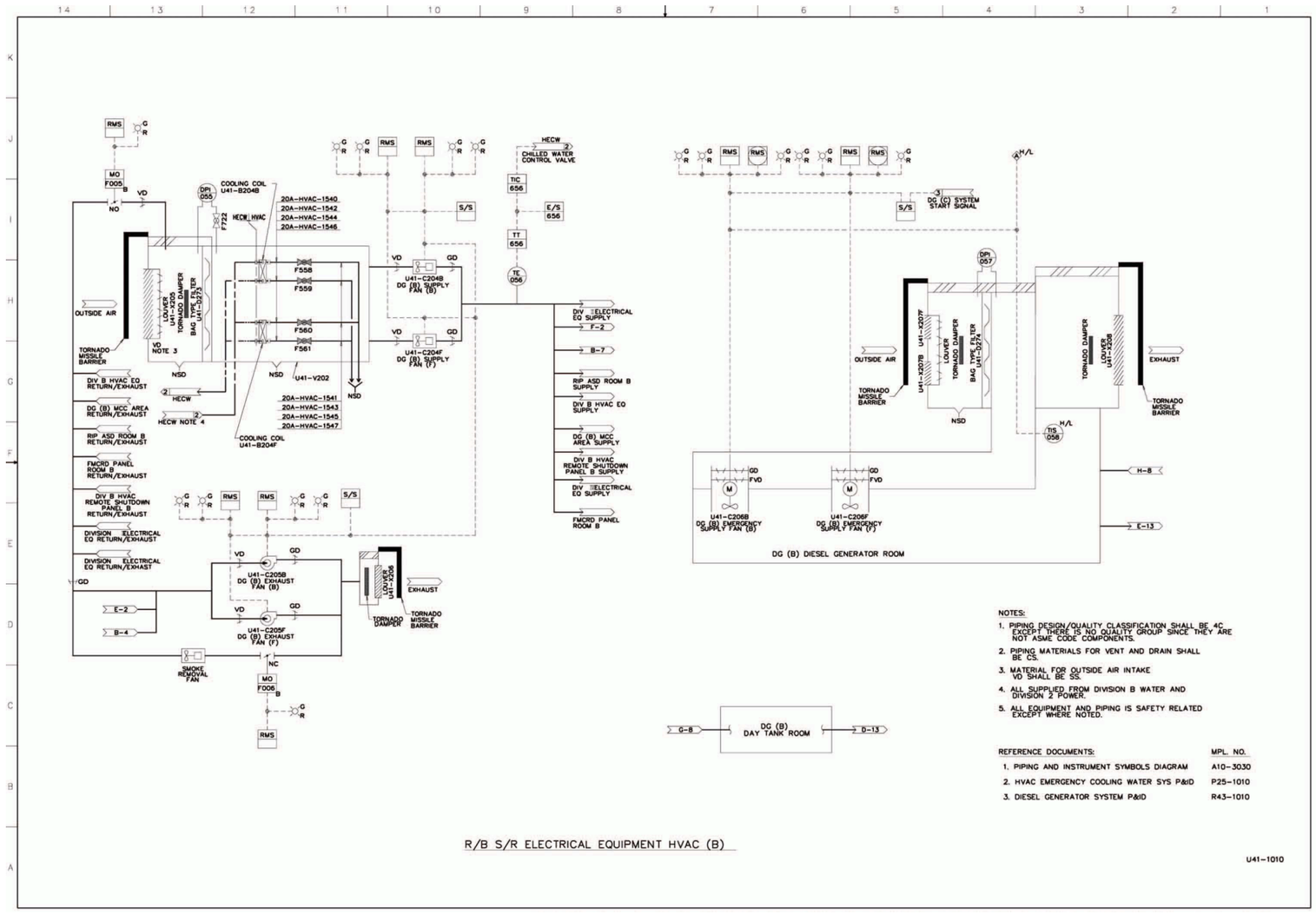


**Figure 9.4-4 – R/B Safety-related Electrical Equipment Hvac System (Sheet 2 Of 3)**

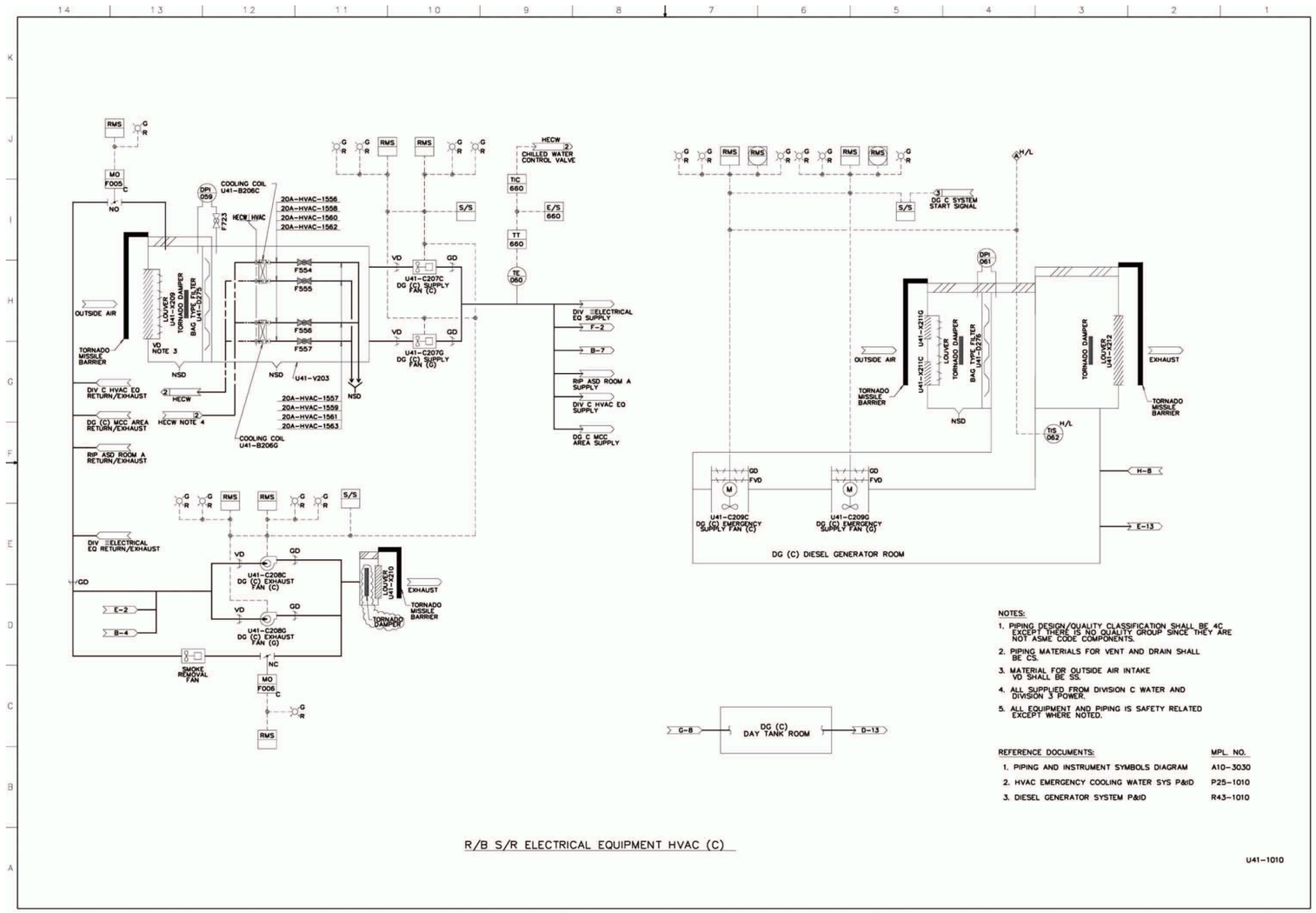


**Figure 9.4-4 – R/B Safety-related Electrical Equipment Hvac System (Sheet 3 Of 3)**

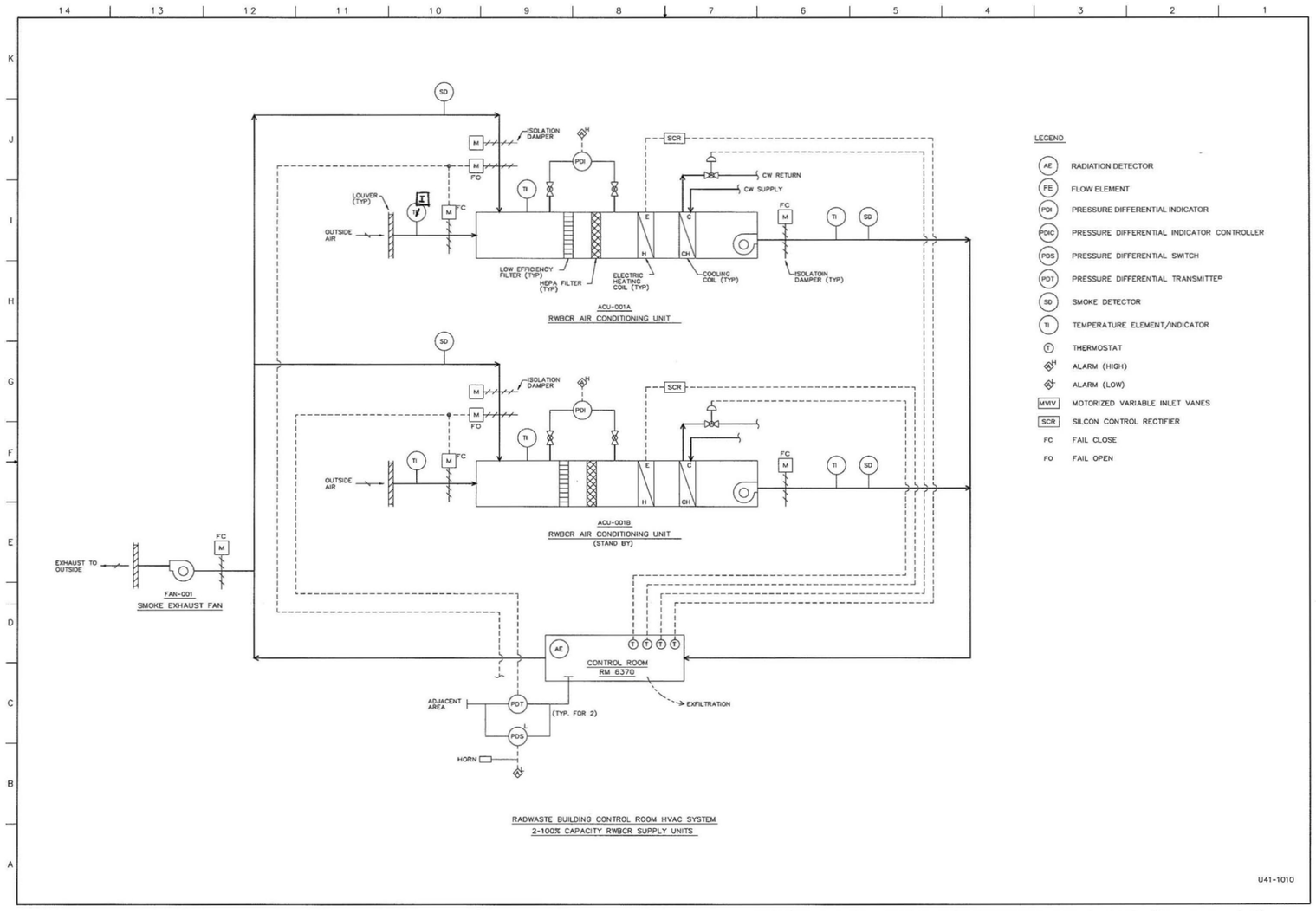


**Figure 9.4-10 – Radwaste Building HVAC P&ID (Sheet 1 Of 3)**

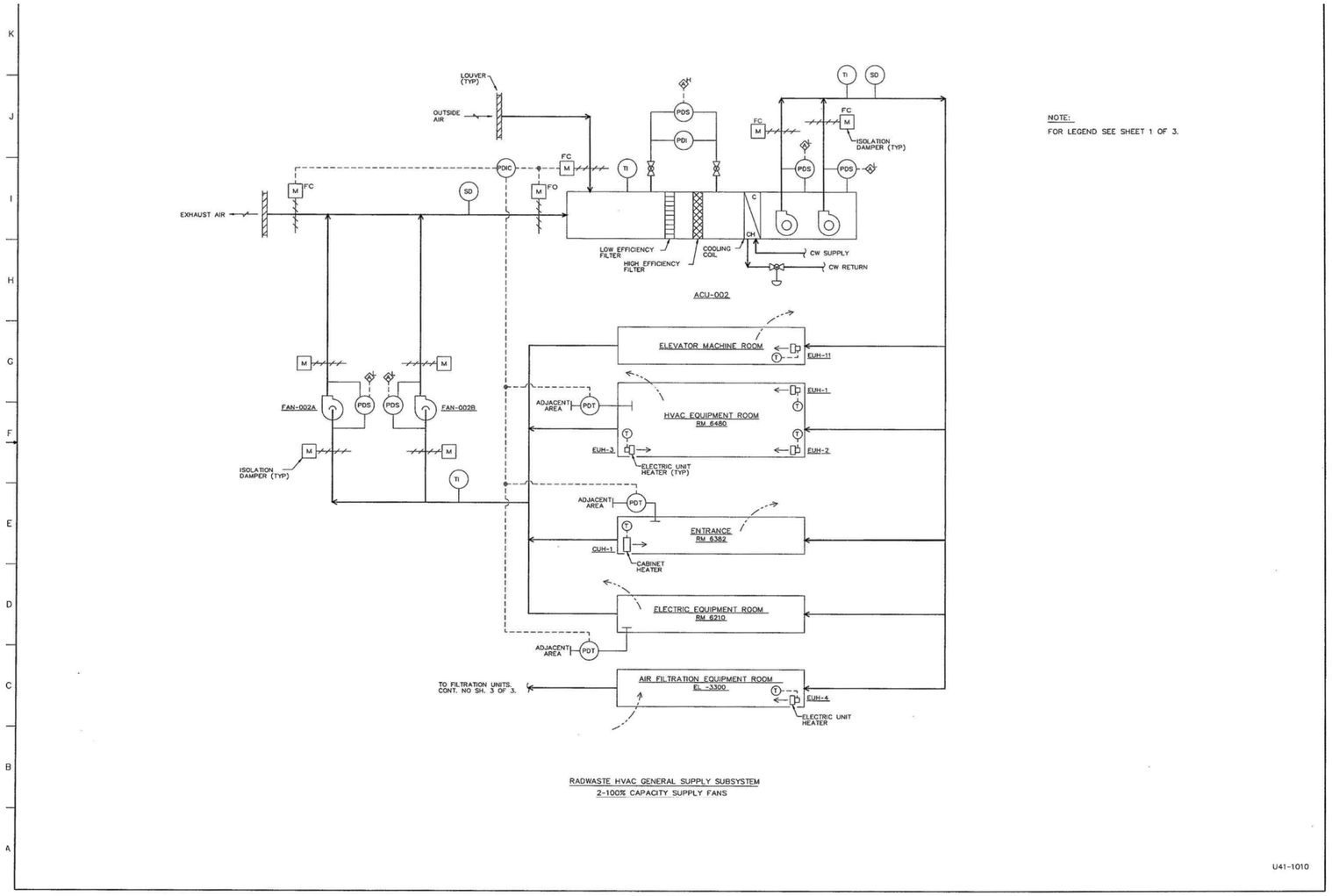


**Figure 9.4-10 – Radwaste Building HVAC P&ID (Sheet 2 of 3)**

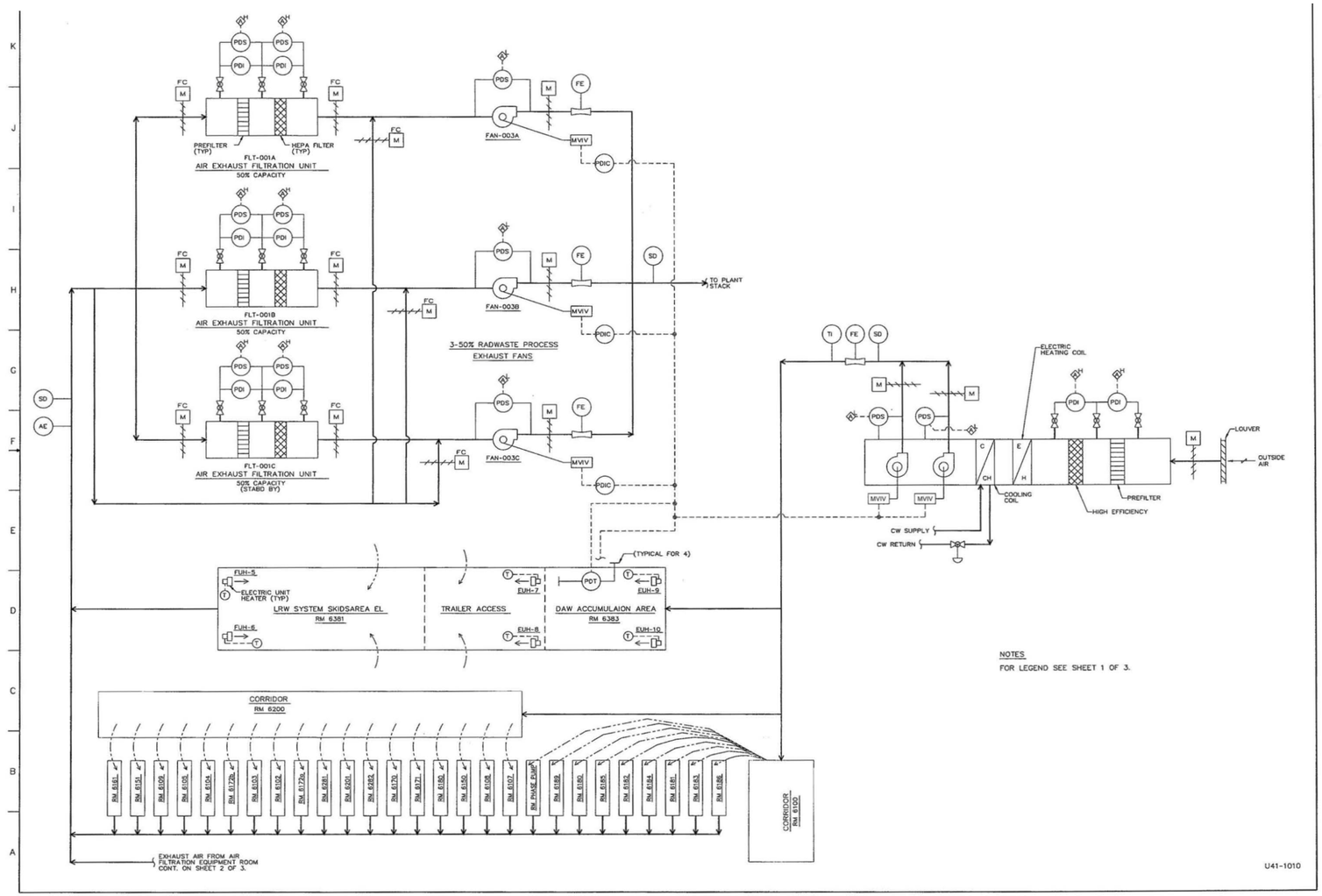


**Figure 9.4-10 – Radwaste Building HVAC P&ID (Sheet 3 of 3)**

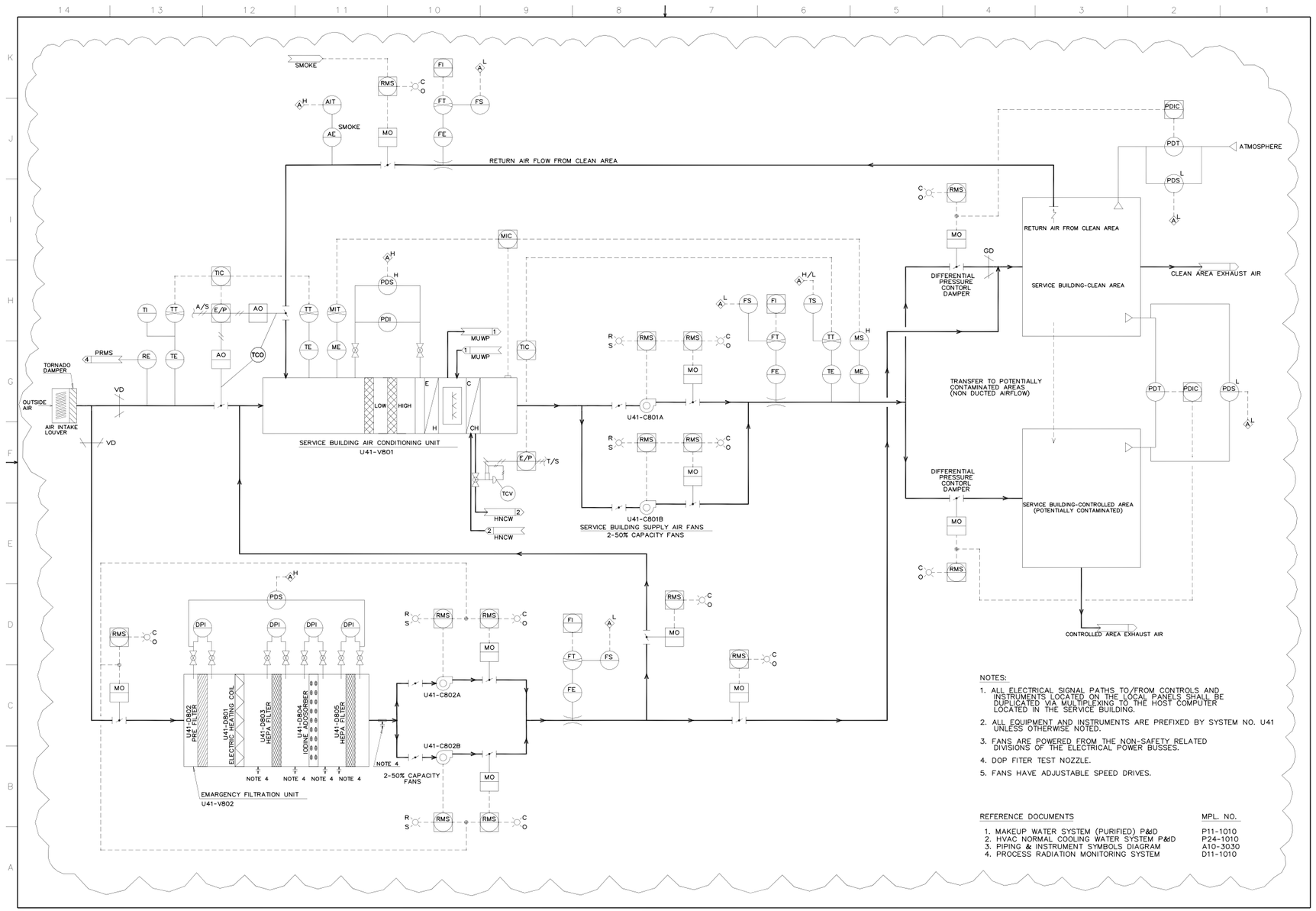


NOTES:

1. ALL ELECTRICAL SIGNAL PATHS TO/FROM CONTROLS AND INSTRUMENTS LOCATED ON THE LOCAL PANELS SHALL BE DUPLICATED VIA MULTIPLEXING TO THE HOST COMPUTER LOCATED IN THE SERVICE BUILDING.
2. ALL EQUIPMENT AND INSTRUMENTS ARE PREFIXED BY SYSTEM NO. U41 UNLESS OTHERWISE NOTED.
3. FANS ARE POWERED FROM THE NON-SAFETY RELATED DIVISIONS OF THE ELECTRICAL POWER BUSSES.
4. DOP FITER TEST NOZZLE.
5. FANS HAVE ADJUSTABLE SPEED DRIVES.

| REFERENCE DOCUMENTS | MPL. NO. |
|---|---|
| 1. MAKEUP WATER SYSTEM (PURIFIED) P&ID | P11-1010 |
| 2. HVAC NORMAL COOLING WATER SYSTEM P&ID | P24-1010 |
| 3. PIPING & INSTRUMENT SYMBOLS DIAGRAM | A10-3030 |
| 4. PROCESS RADIATION MONITORING SYSTEM | D11-1010 |

**Figure 9.4-11 – Service Building HVAC P&ID (SHEET 1 OF 2)**

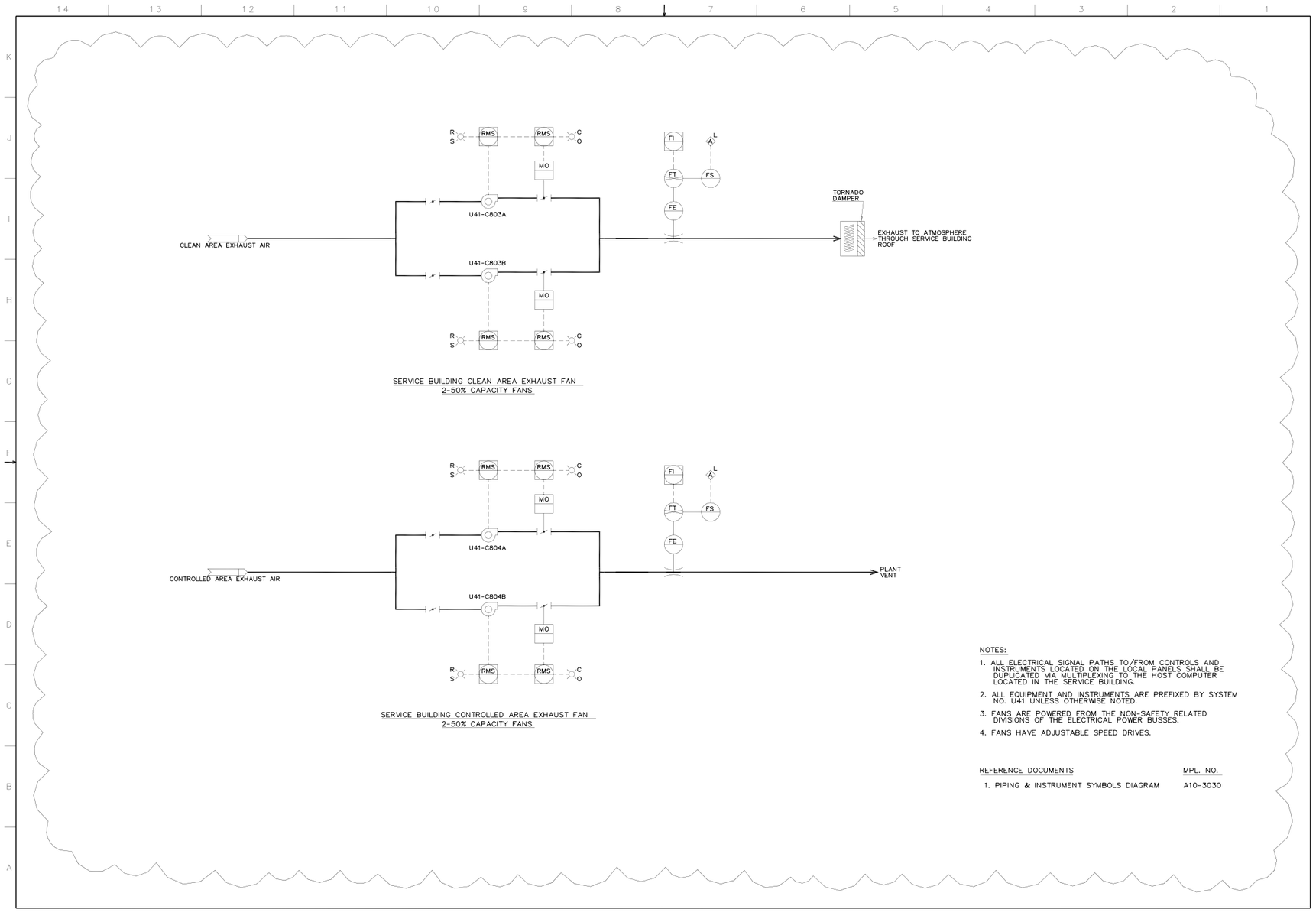


**Figure 9.4-11 – Service Building HVAC P&ID (Sheet 2 OF 2)**

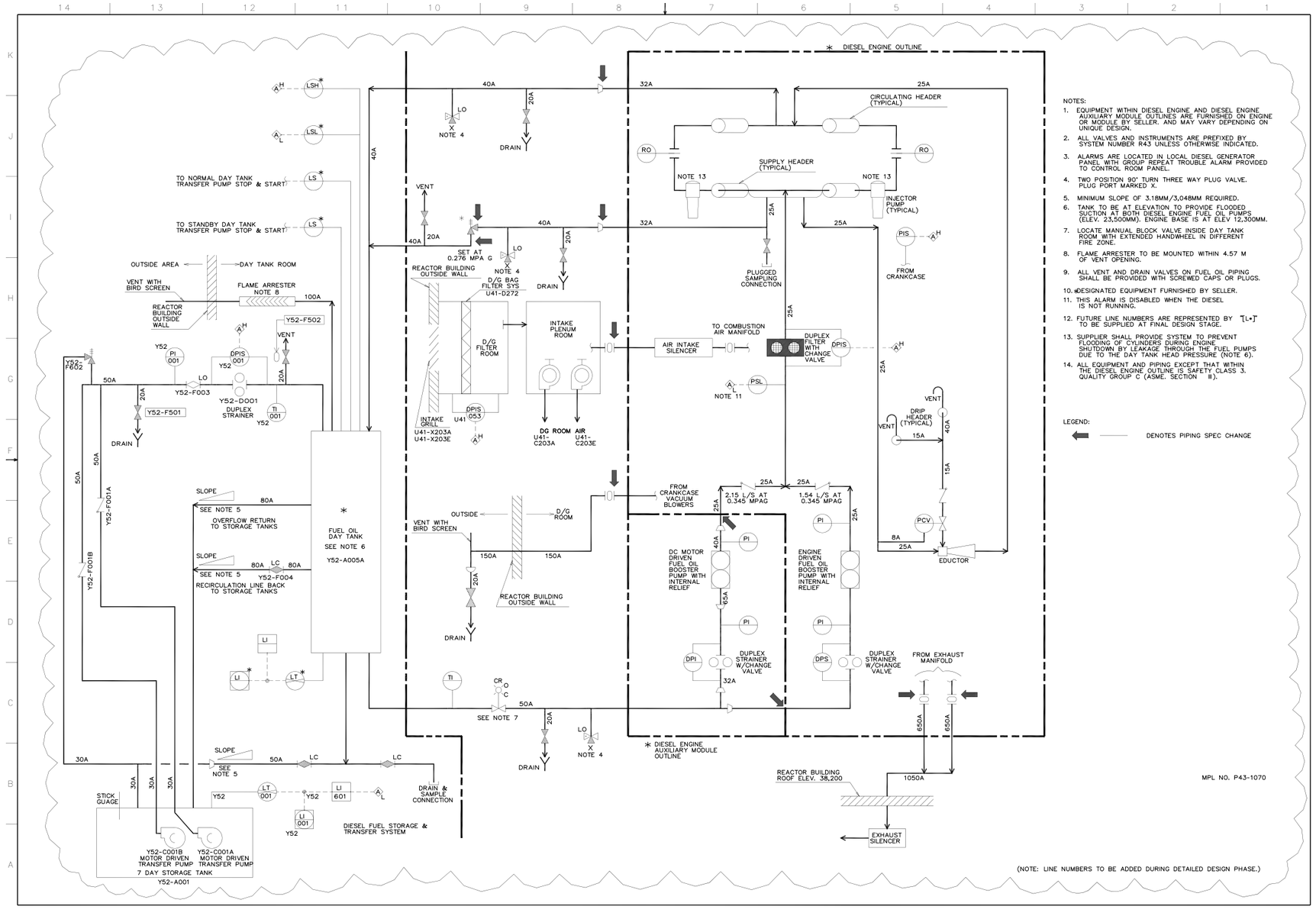


**Figure 9.5-6 – Standby Diesel Generator Fuel Oil And Intake And Exhaust Systems**