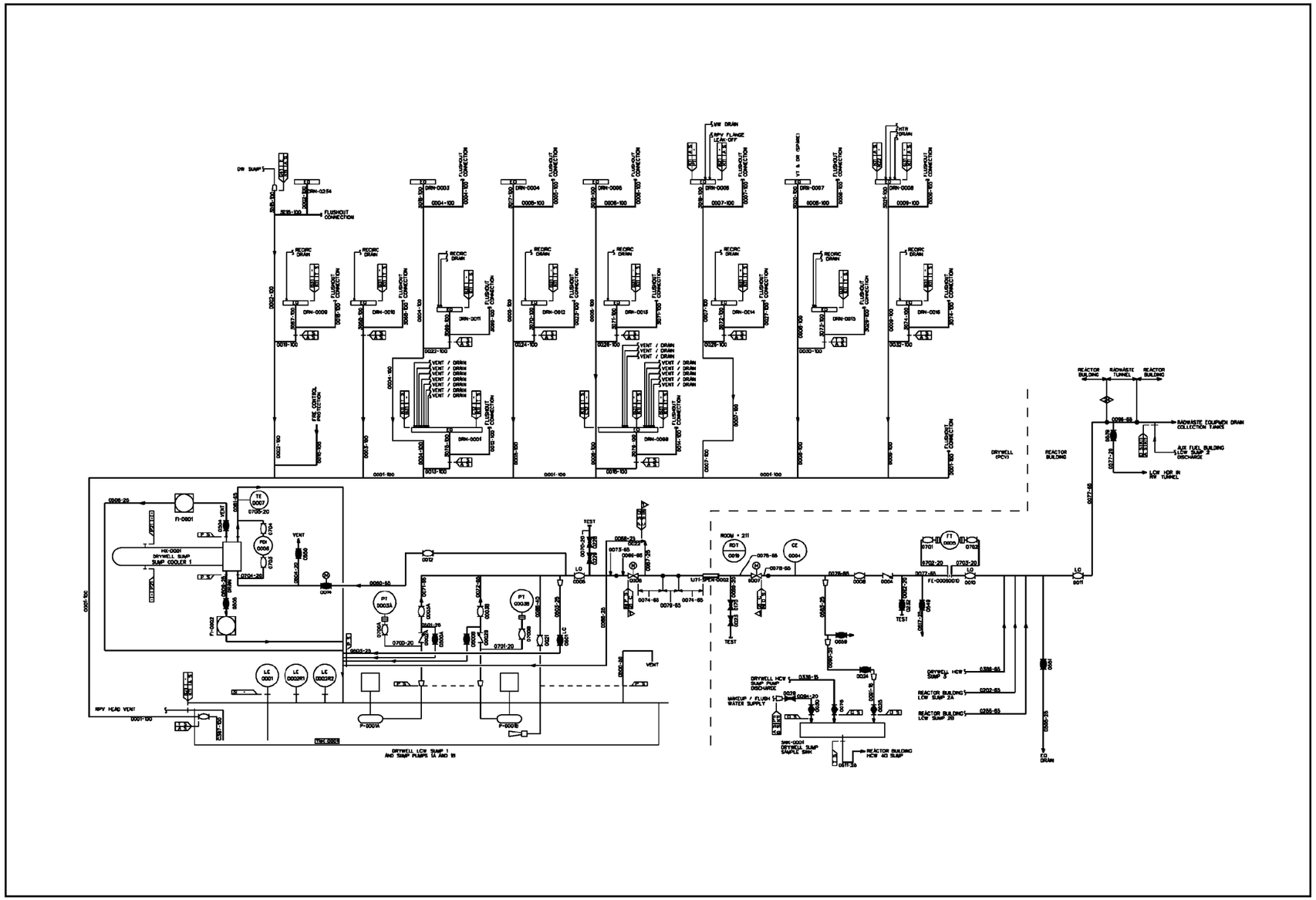

Figure 9.3-11 – Piping and Instrumentation Diagram, Radioactive Drain Transfer (Sheet 1 of 22)

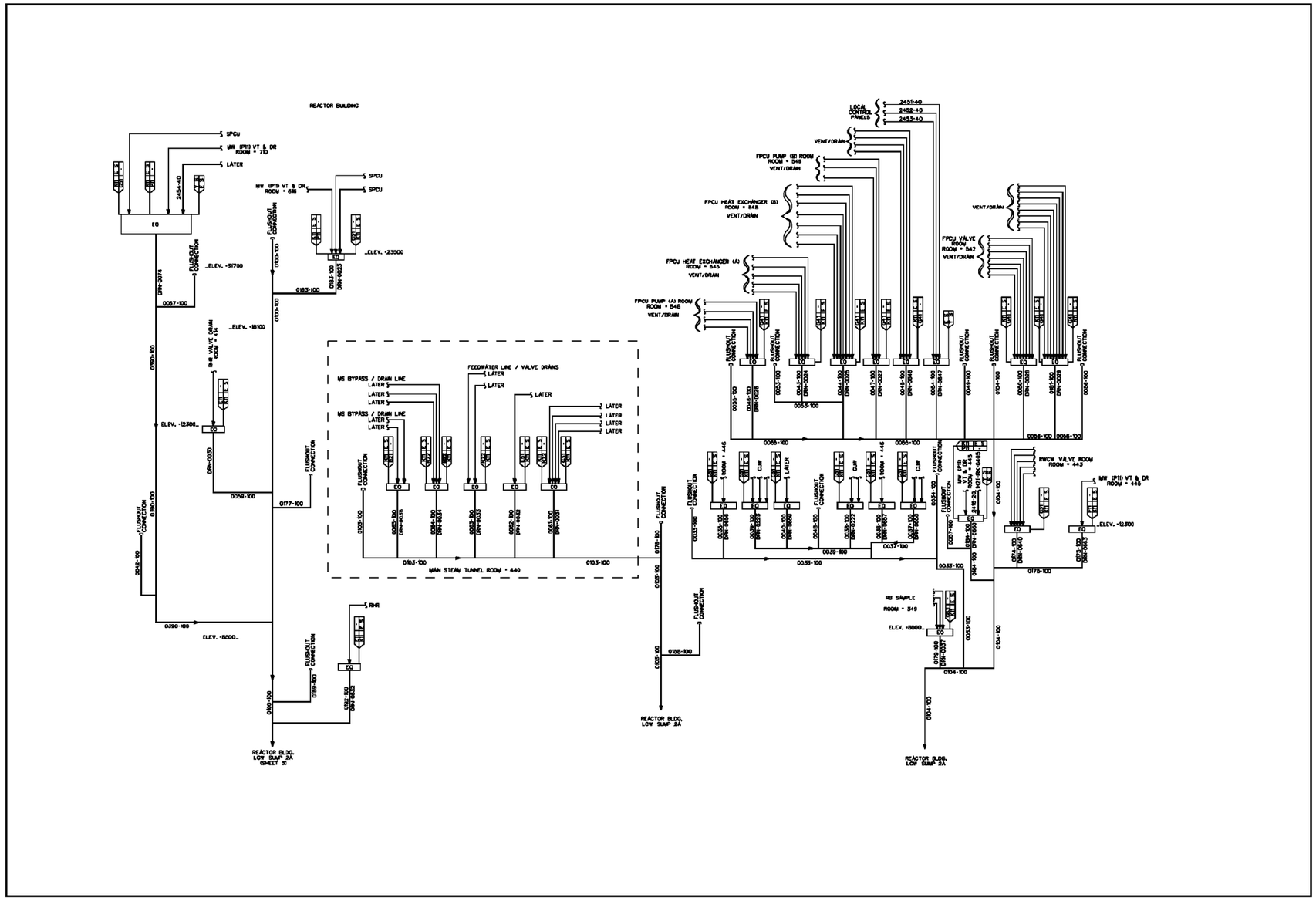

Figure 9.3-11 – Piping and Instrumentation Diagram, Radioactive Drain Transfer (Sheet 2 of 22)

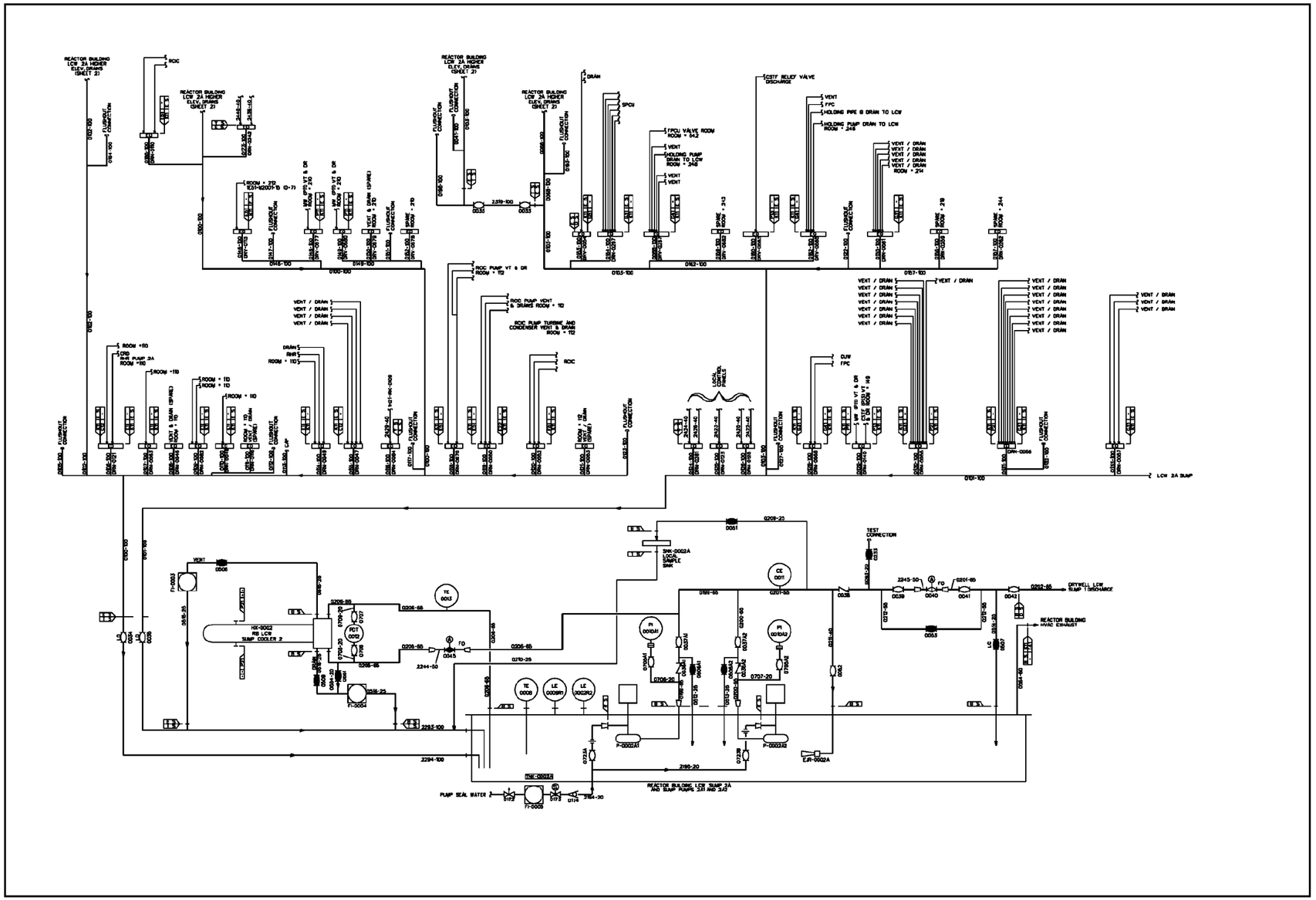

Figure 9.3-11 – Piping and Instrumentation Diagram, Radioactive Drain Transfer (Sheet 3 of 22)

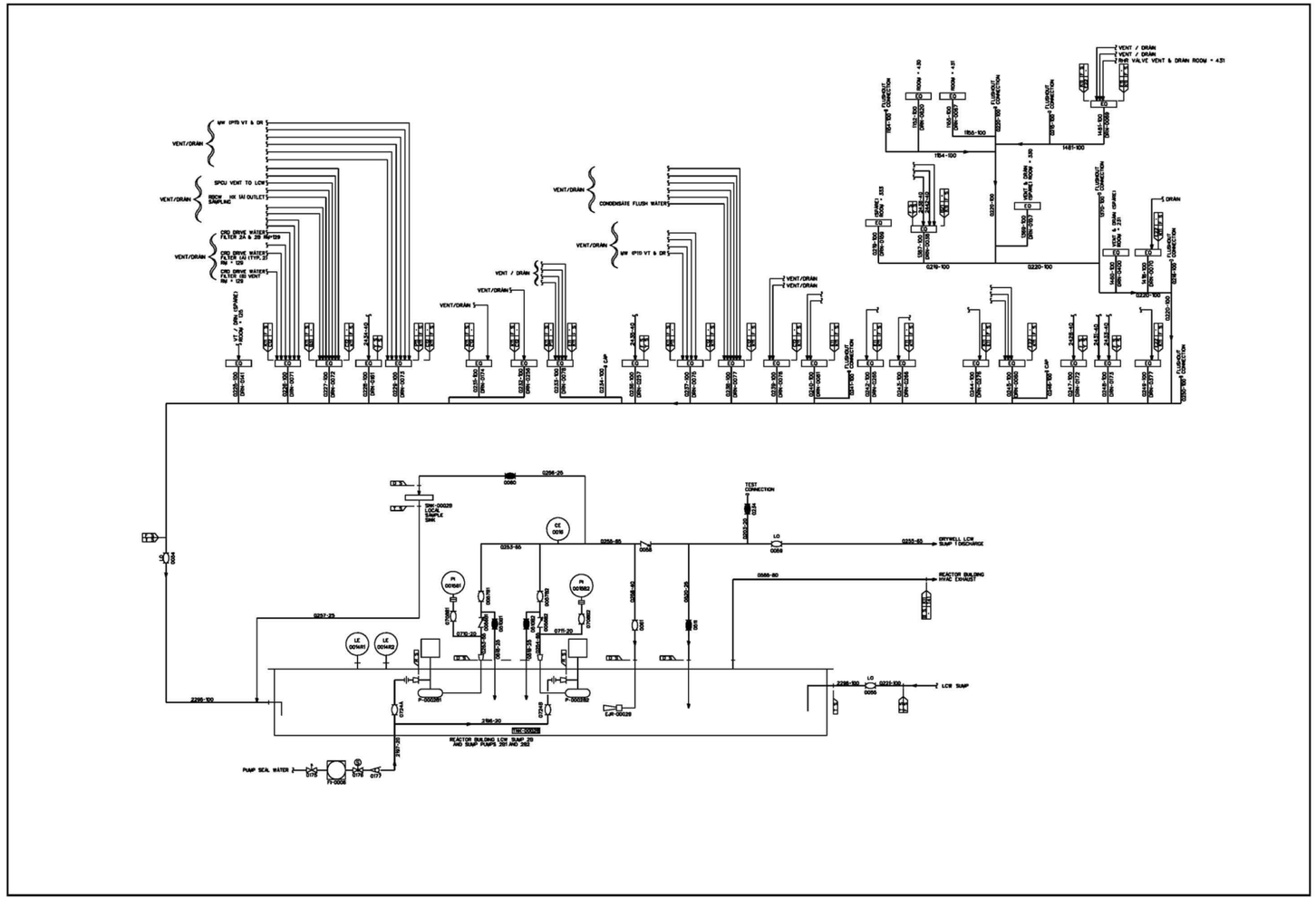

Figure 9.3-11 – Piping and Instrumentation Diagram, Radioactive Drain Transfer (Sheet 4 of 22)

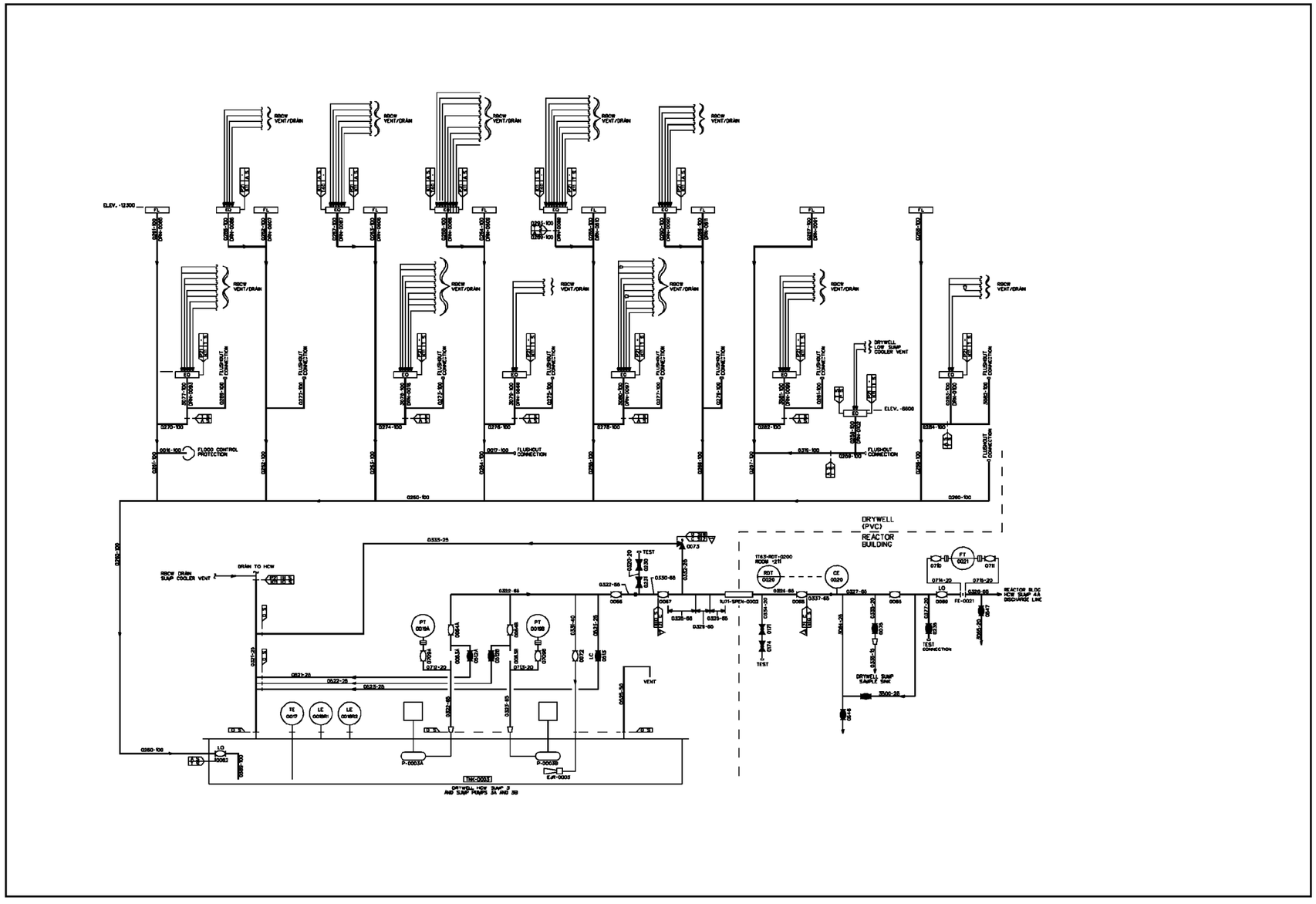

Figure 9.3-11 – Piping and Instrumentation Diagram, Radioactive Drain Transfer (Sheet 5 of 22)

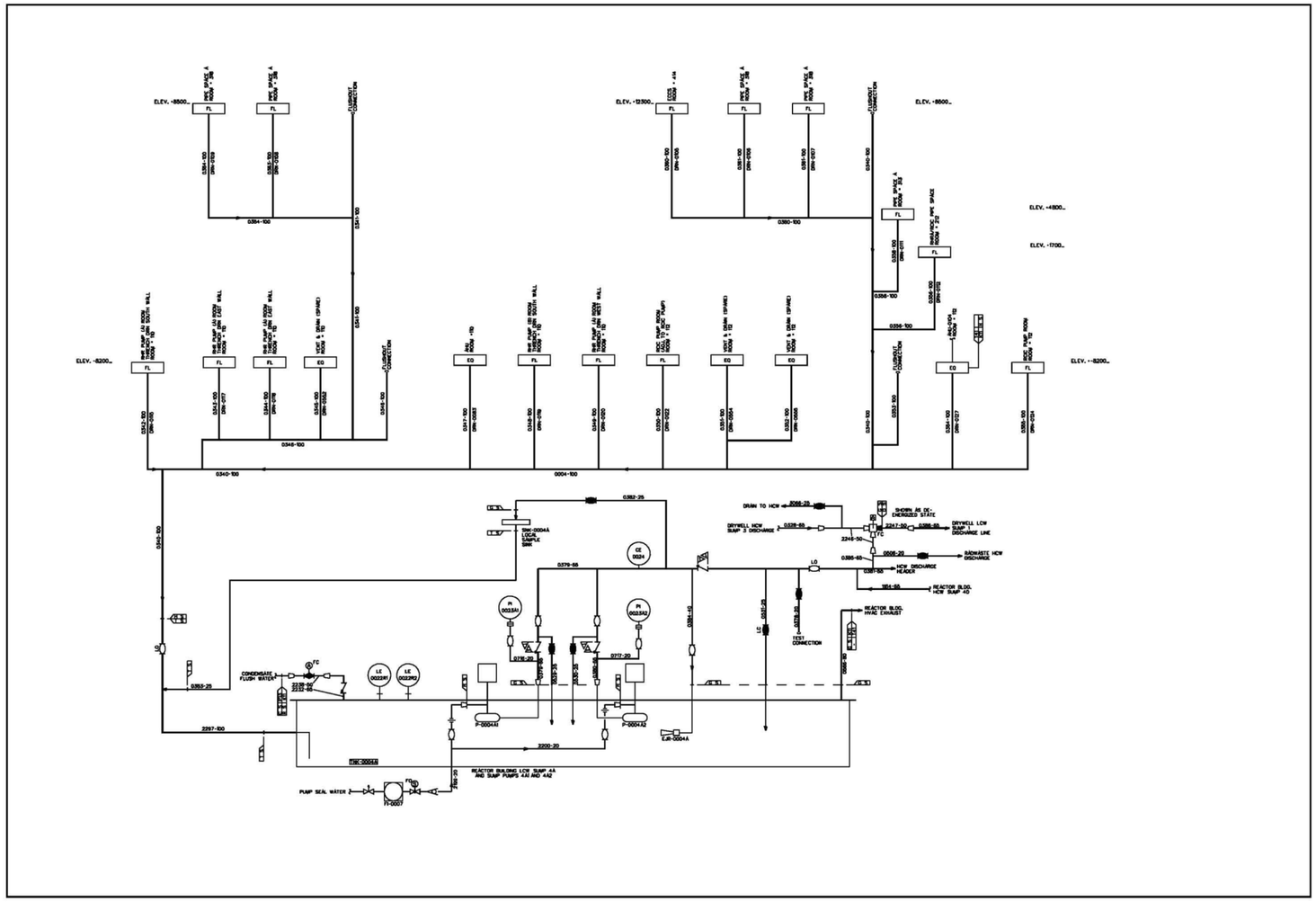

Figure 9.3-11 – Piping and Instrumentation Diagram, Radioactive Drain Transfer (Sheet 6 of 22)

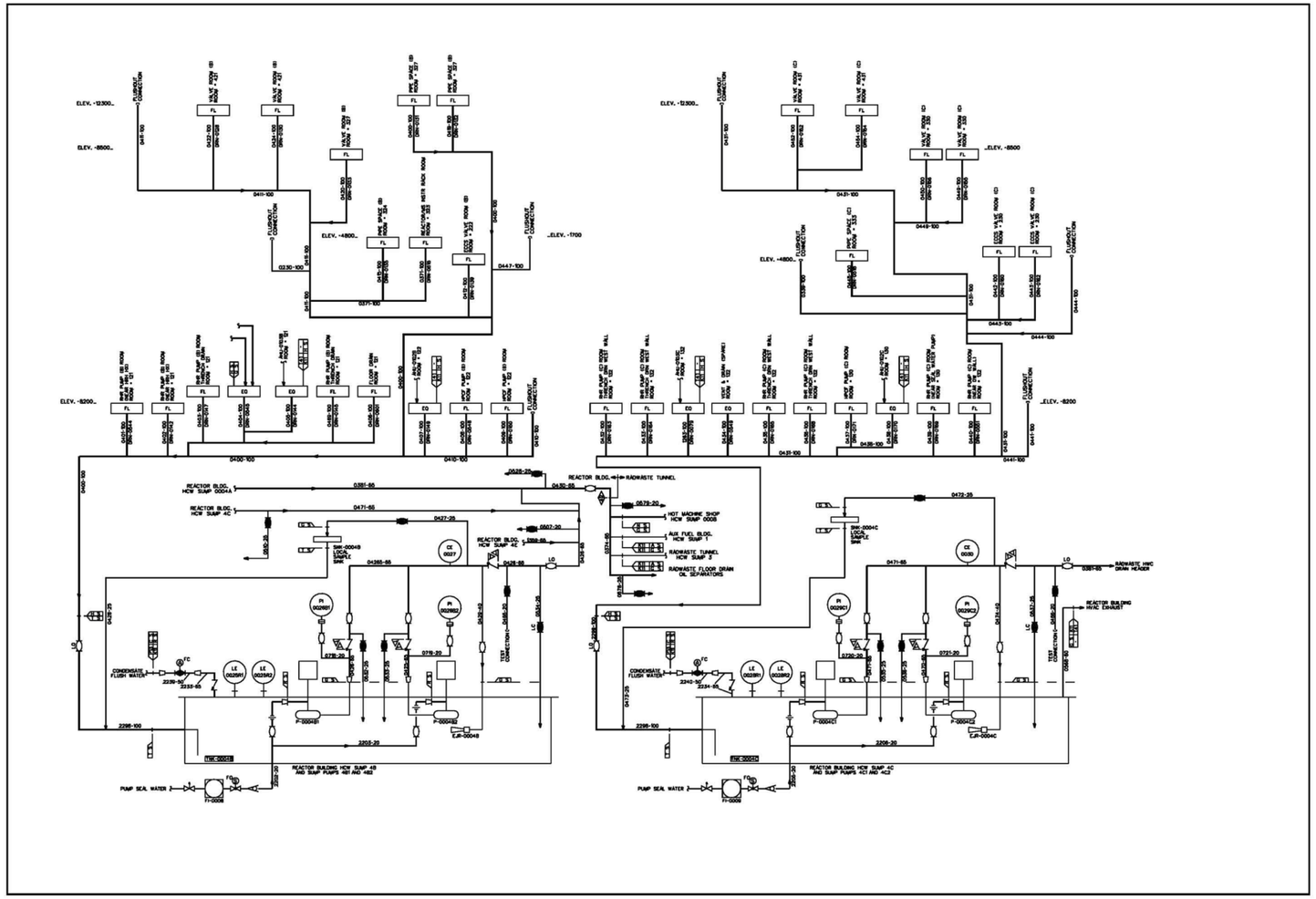

Figure 9.3-11 – Piping and Instrumentation Diagram, Radioactive Drain Transfer (Sheet 7 of 22)

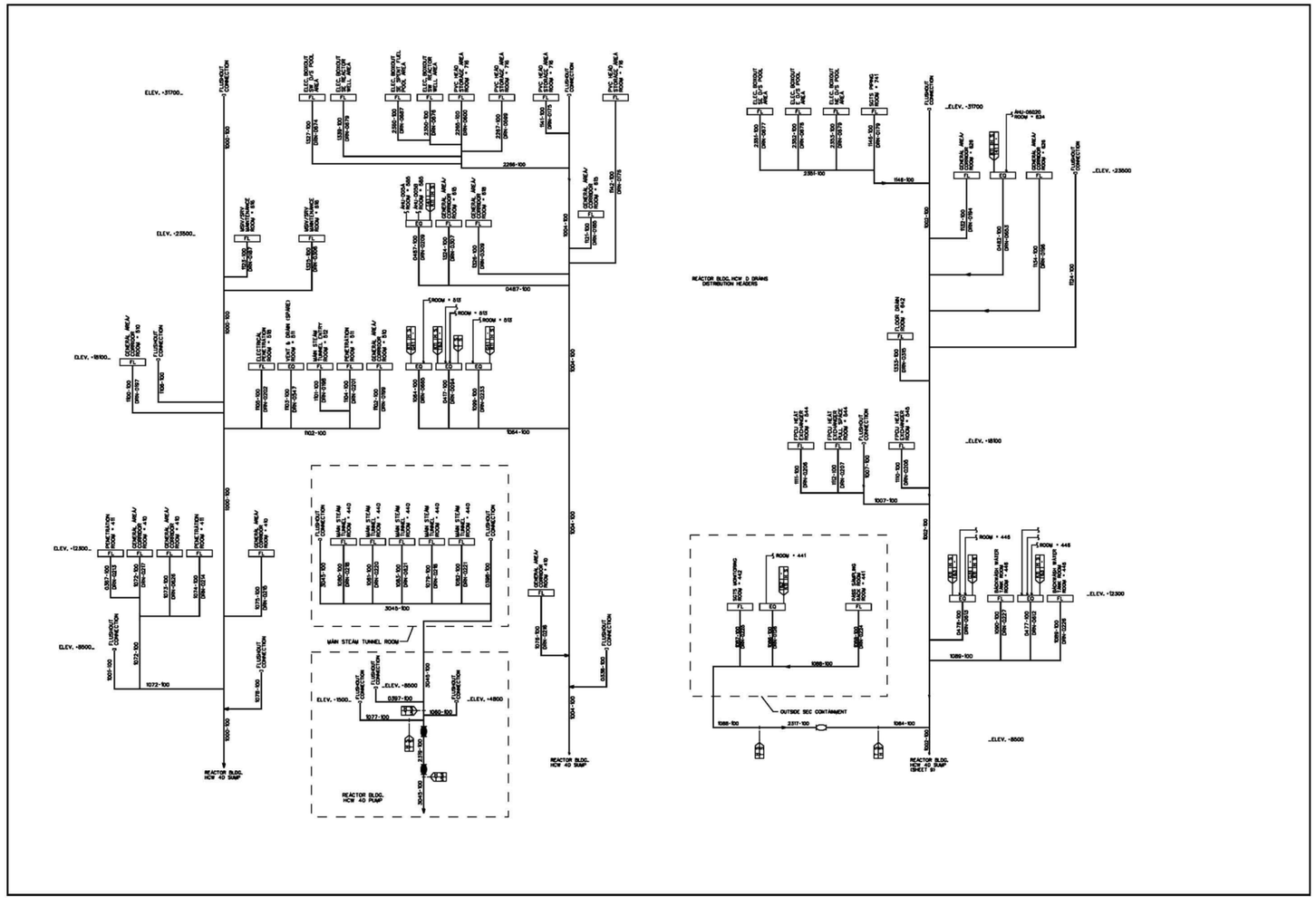

Figure 9.3-11 – Piping and Instrumentation Diagram, Radioactive Drain Transfer (Sheet 8 of 22)

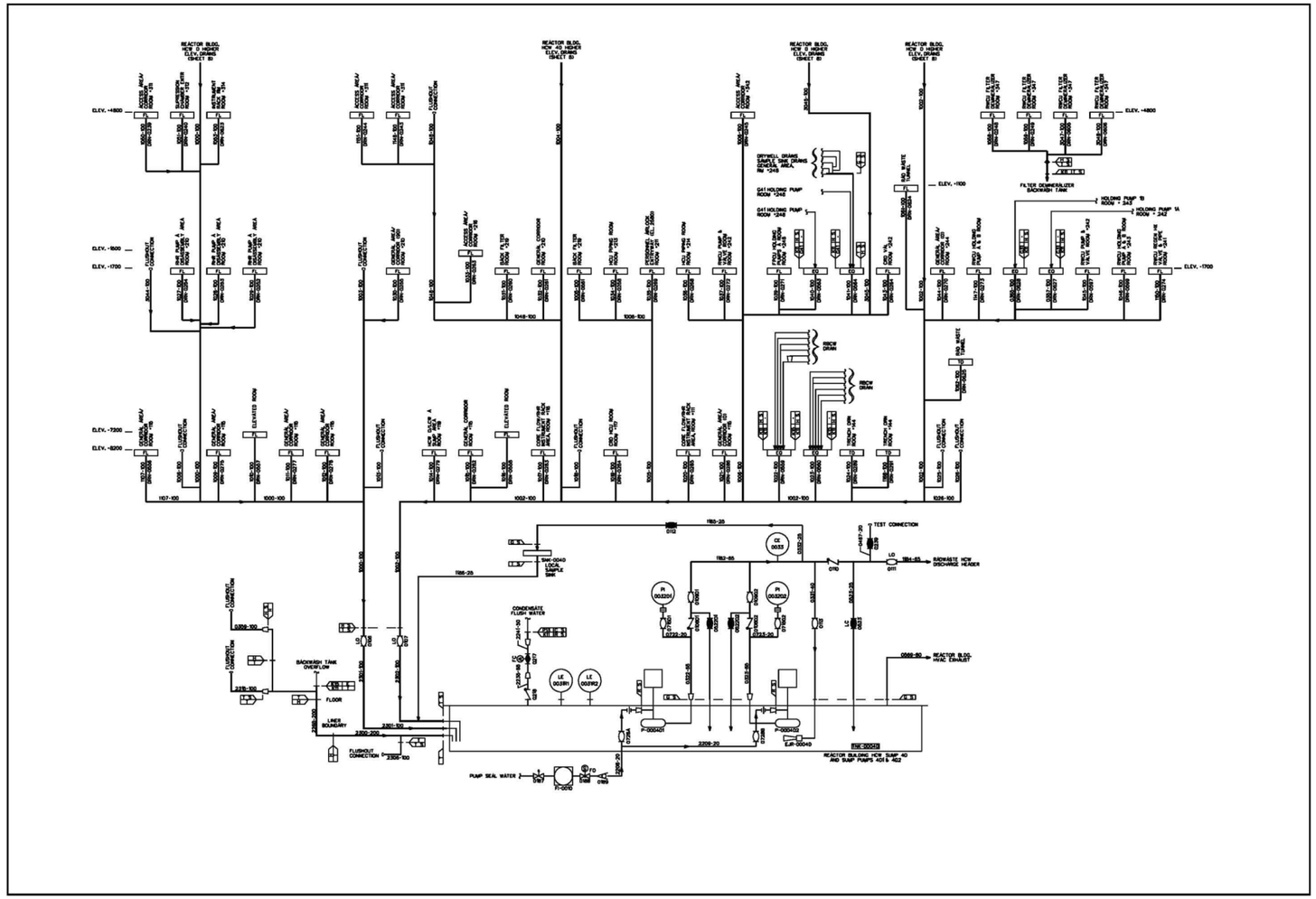

Figure 9.3-11 – Piping and Instrumentation Diagram, Radioactive Drain Transfer (Sheet 9 of 22)

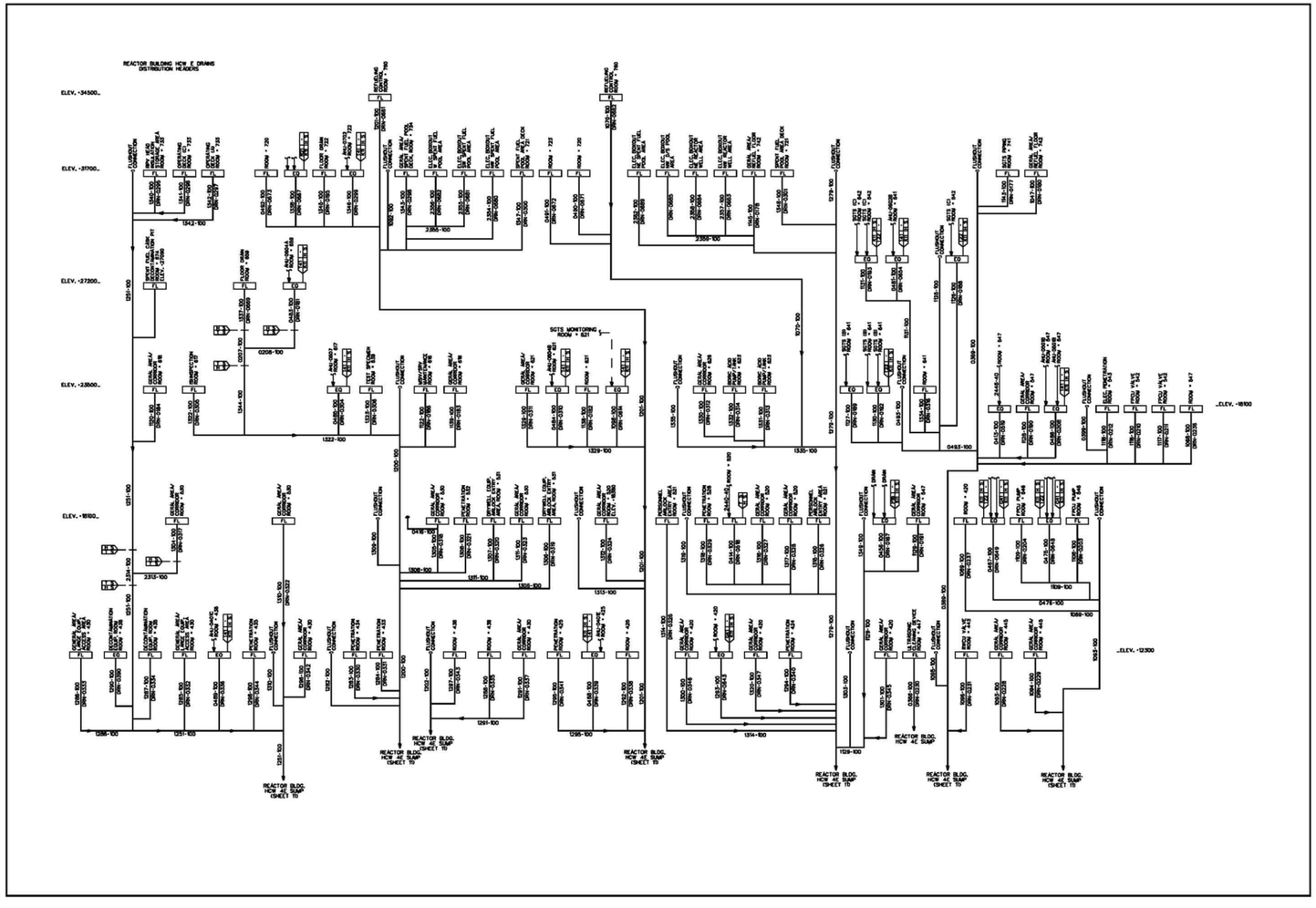

Figure 9.3-11 – Piping and Instrumentation Diagram, Radioactive Drain Transfer (Sheet 10 of 22)

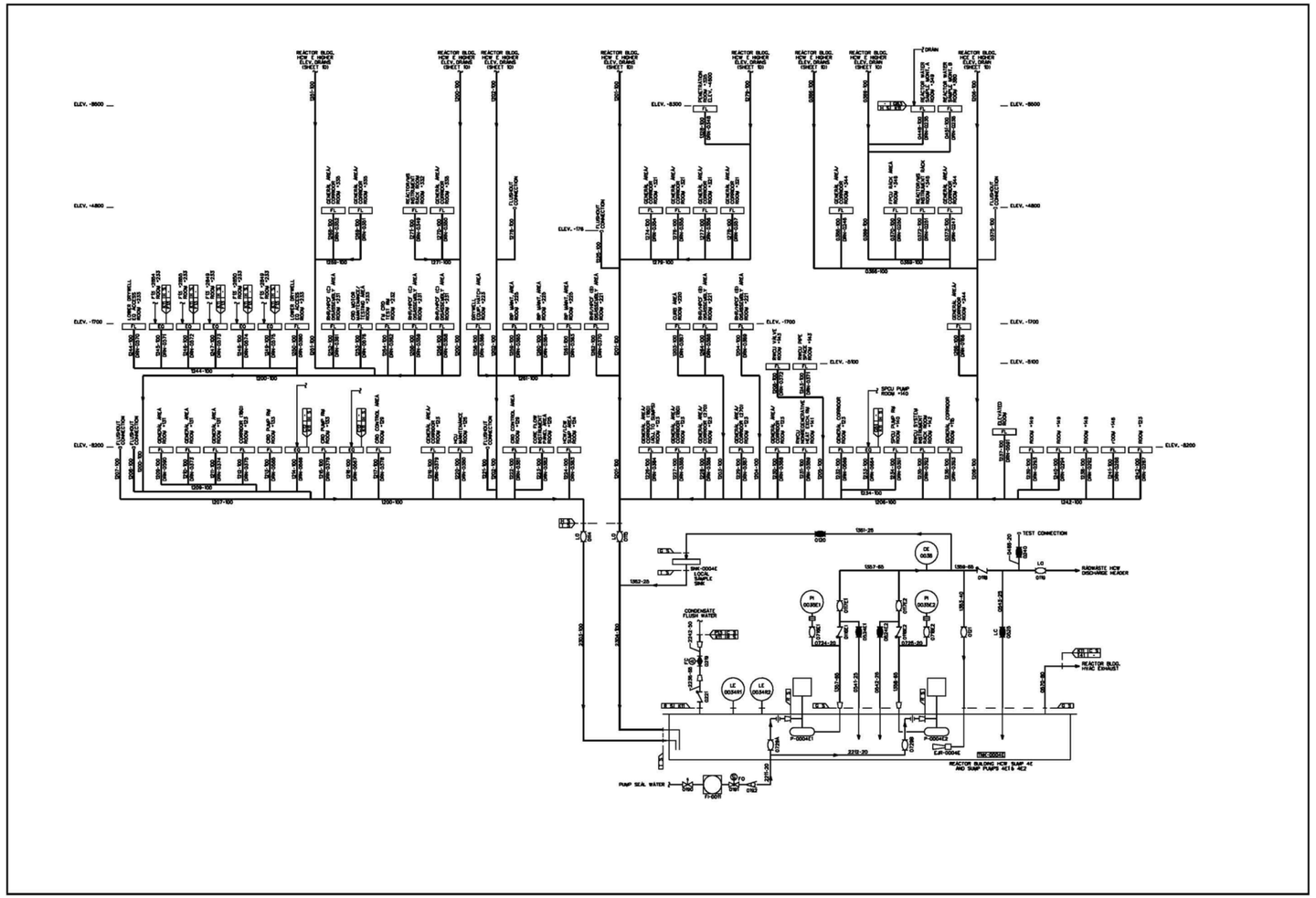

Figure 9.3-11 – Piping and Instrumentation Diagram, Radioactive Drain Transfer (Sheet 11 of 22)

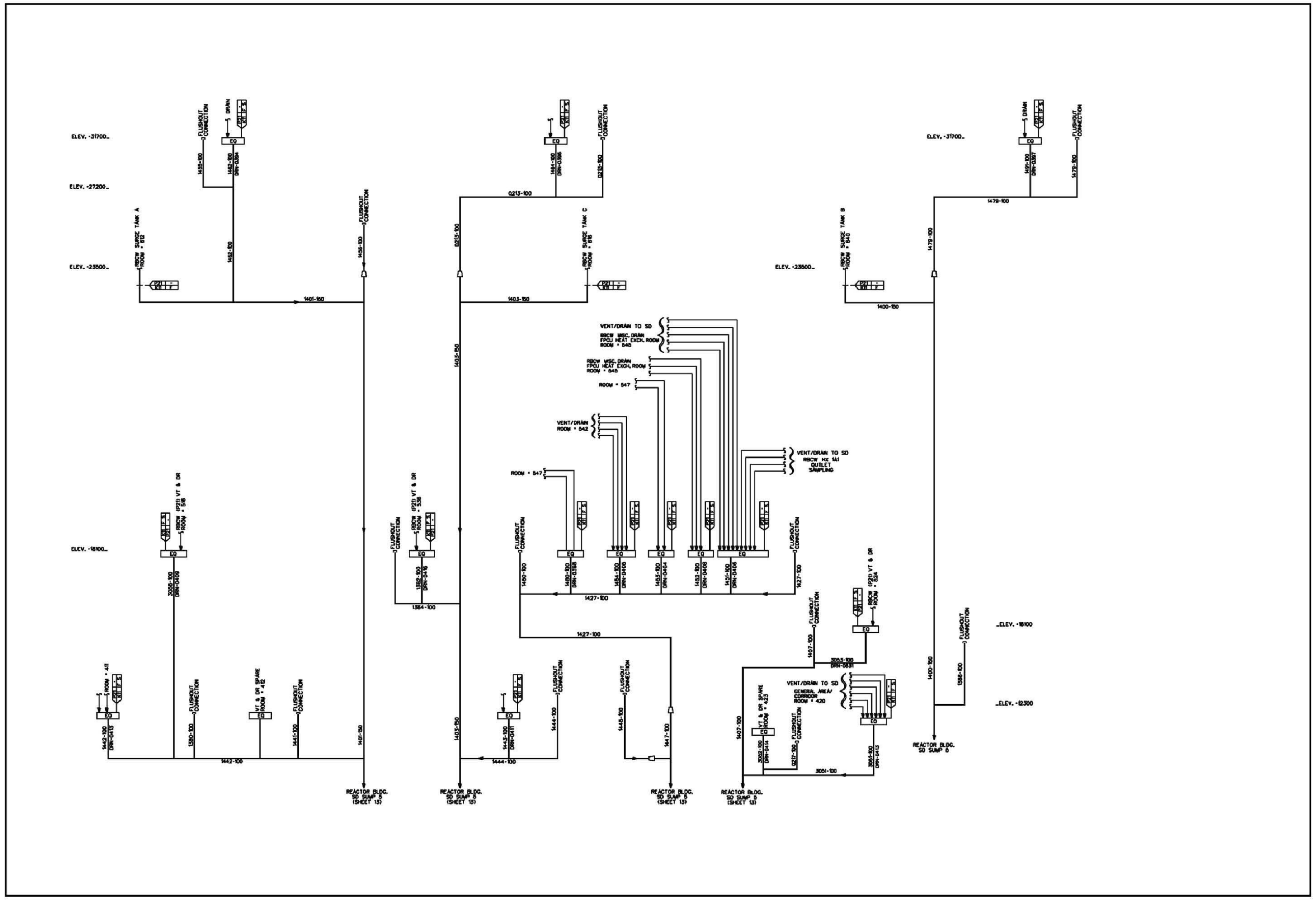

Figure 9.3-11 – Piping and Instrumentation Diagram, Radioactive Drain Transfer (Sheet 12 of 22)

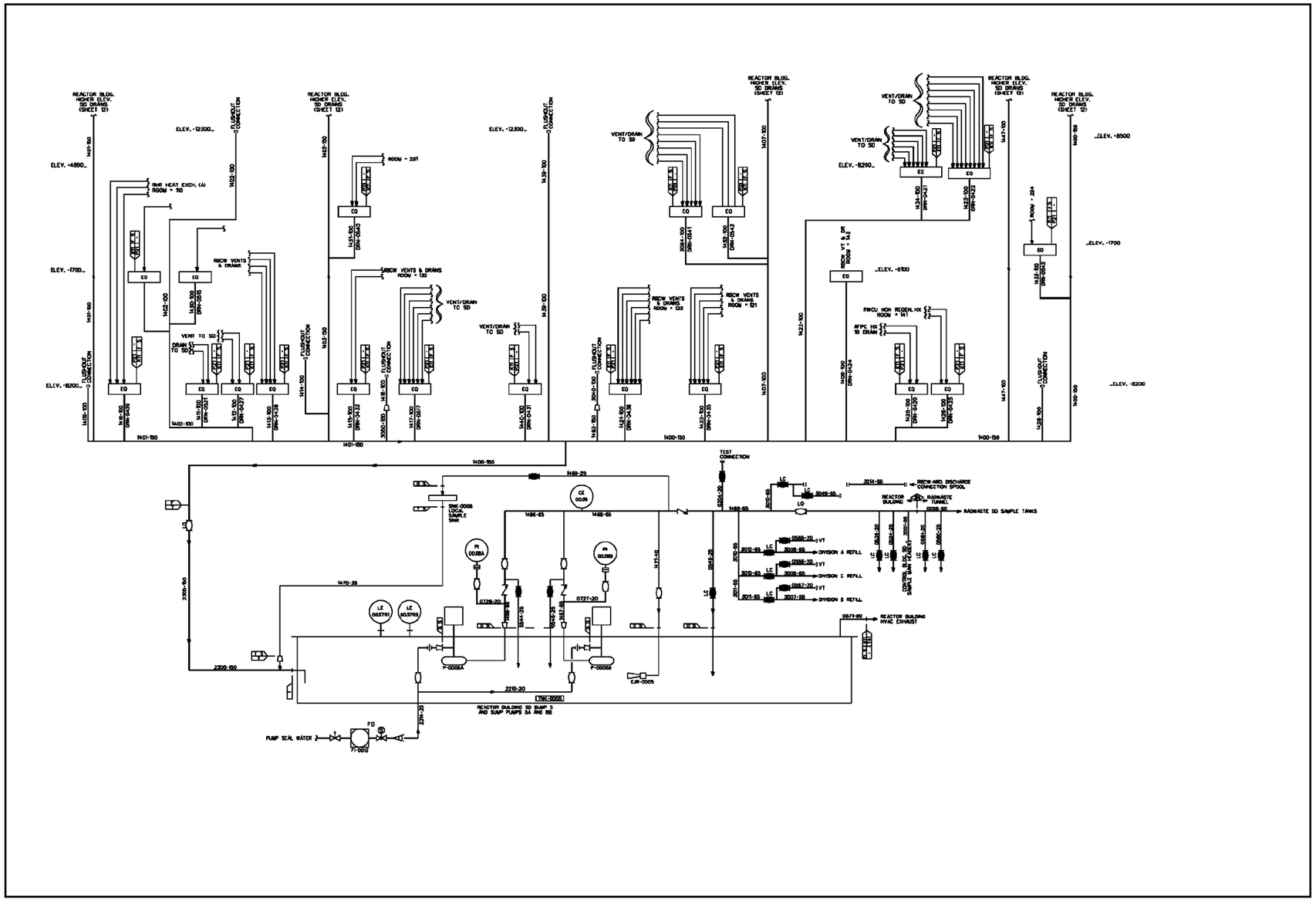

Figure 9.3-11 – Piping and Instrumentation Diagram, Radioactive Drain Transfer (Sheet 13 of 22)

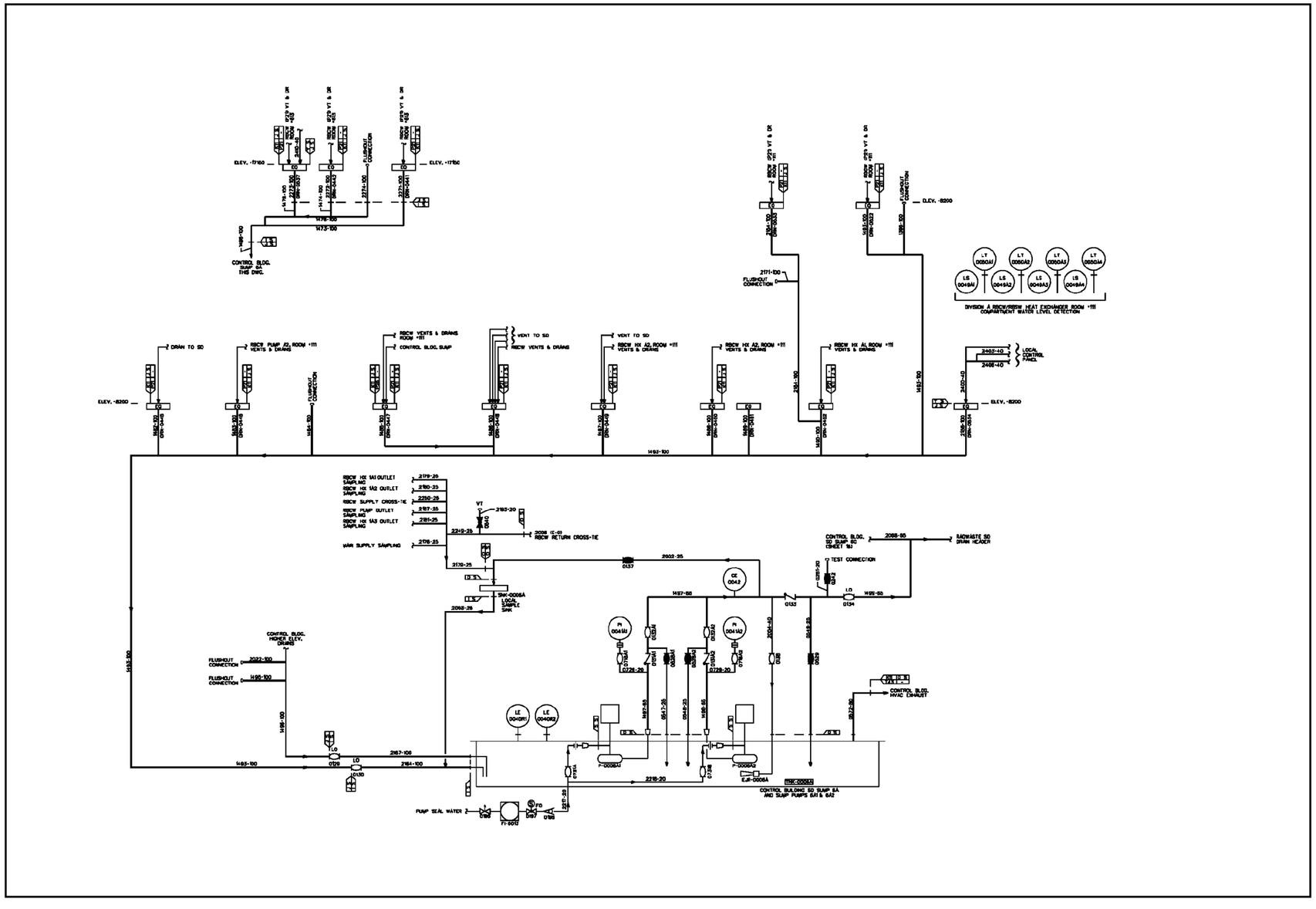

Figure 9.3-11 – Piping and Instrumentation Diagram, Radioactive Drain Transfer (Sheet 14 of 22)

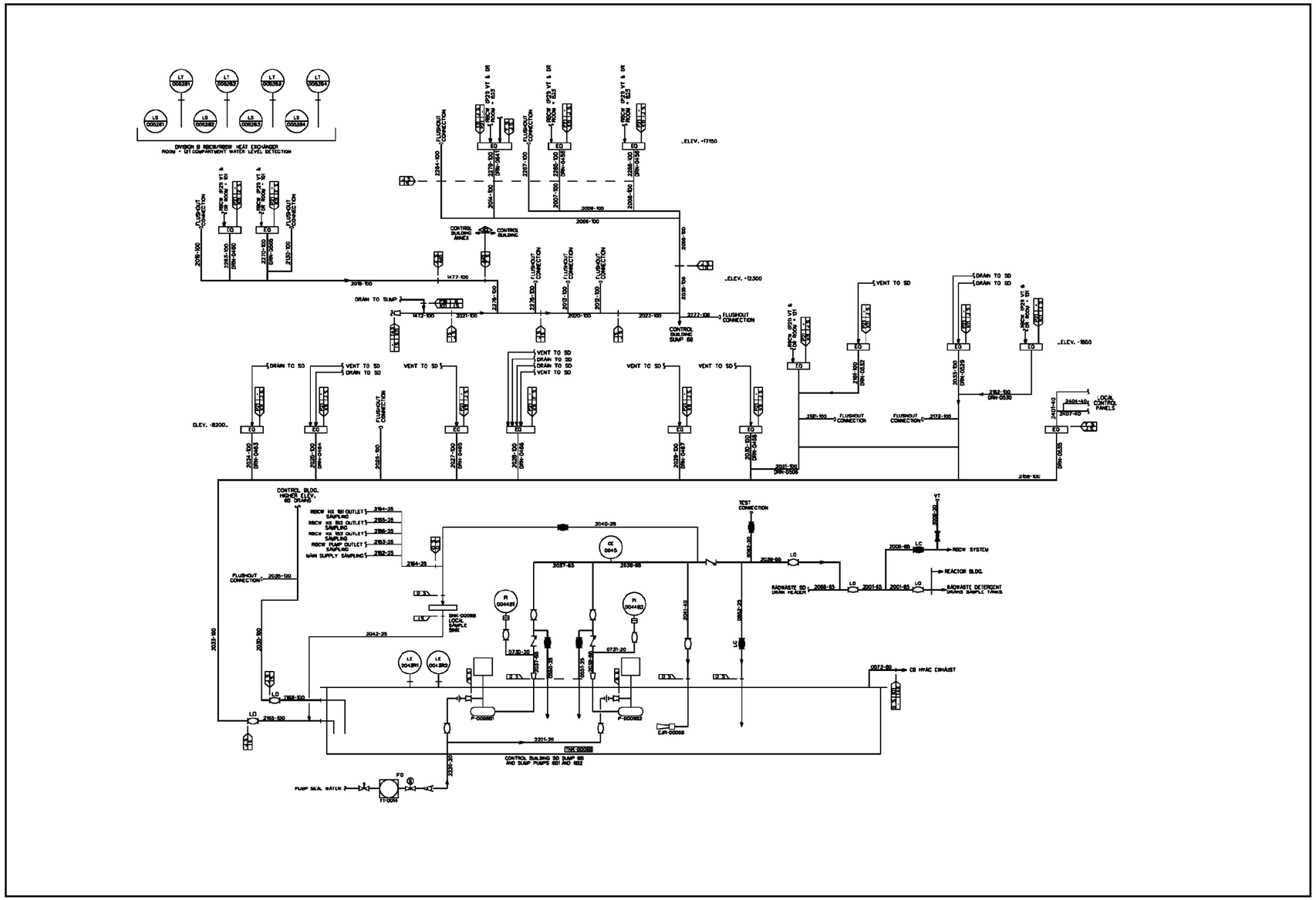

Figure 9.3-11 – Piping and Instrumentation Diagram, Radioactive Drain Transfer (Sheet 15 of 22)

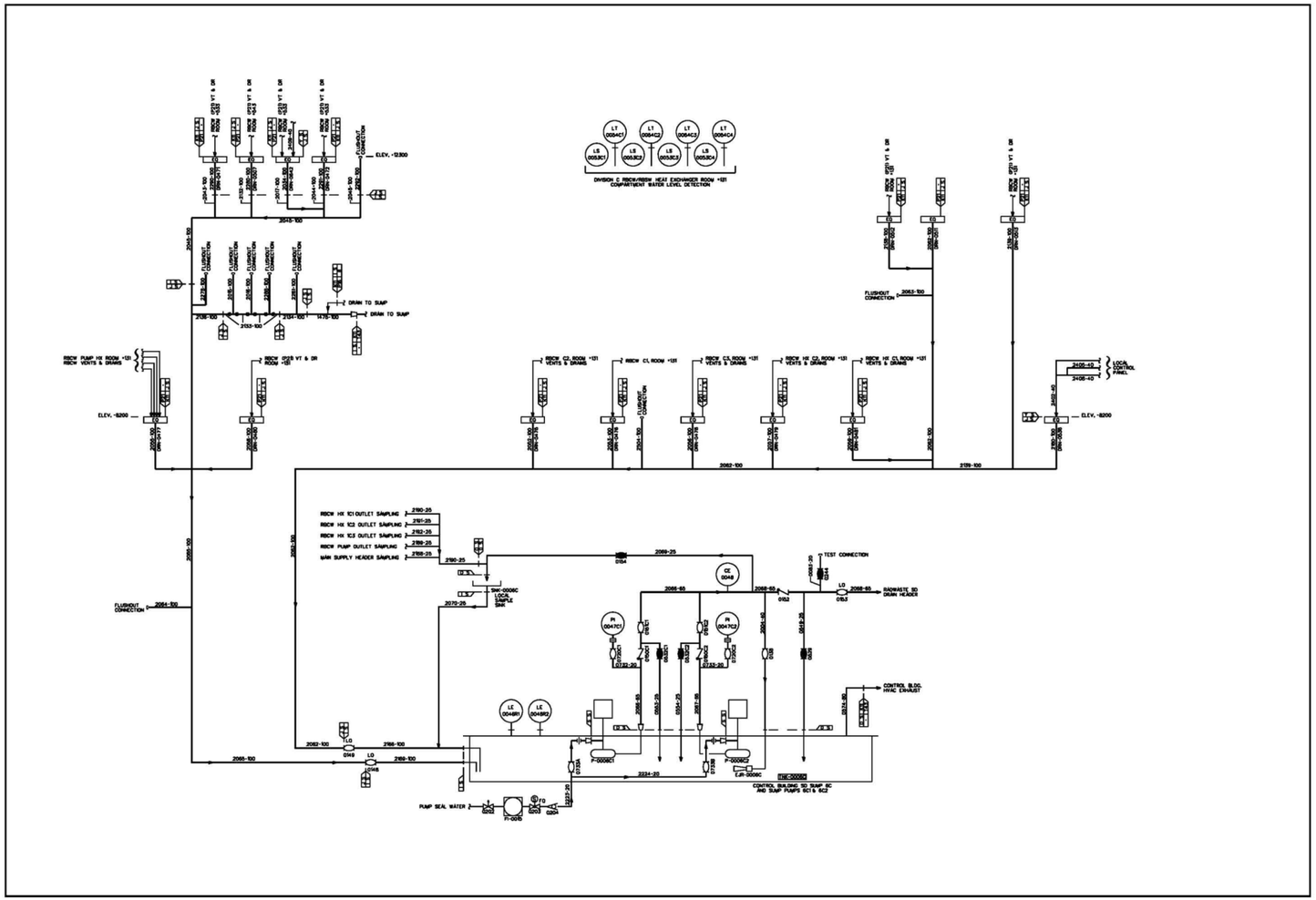

Figure 9.3-11 – Piping and Instrumentation Diagram, Radioactive Drain Transfer (Sheet 16 of 22)

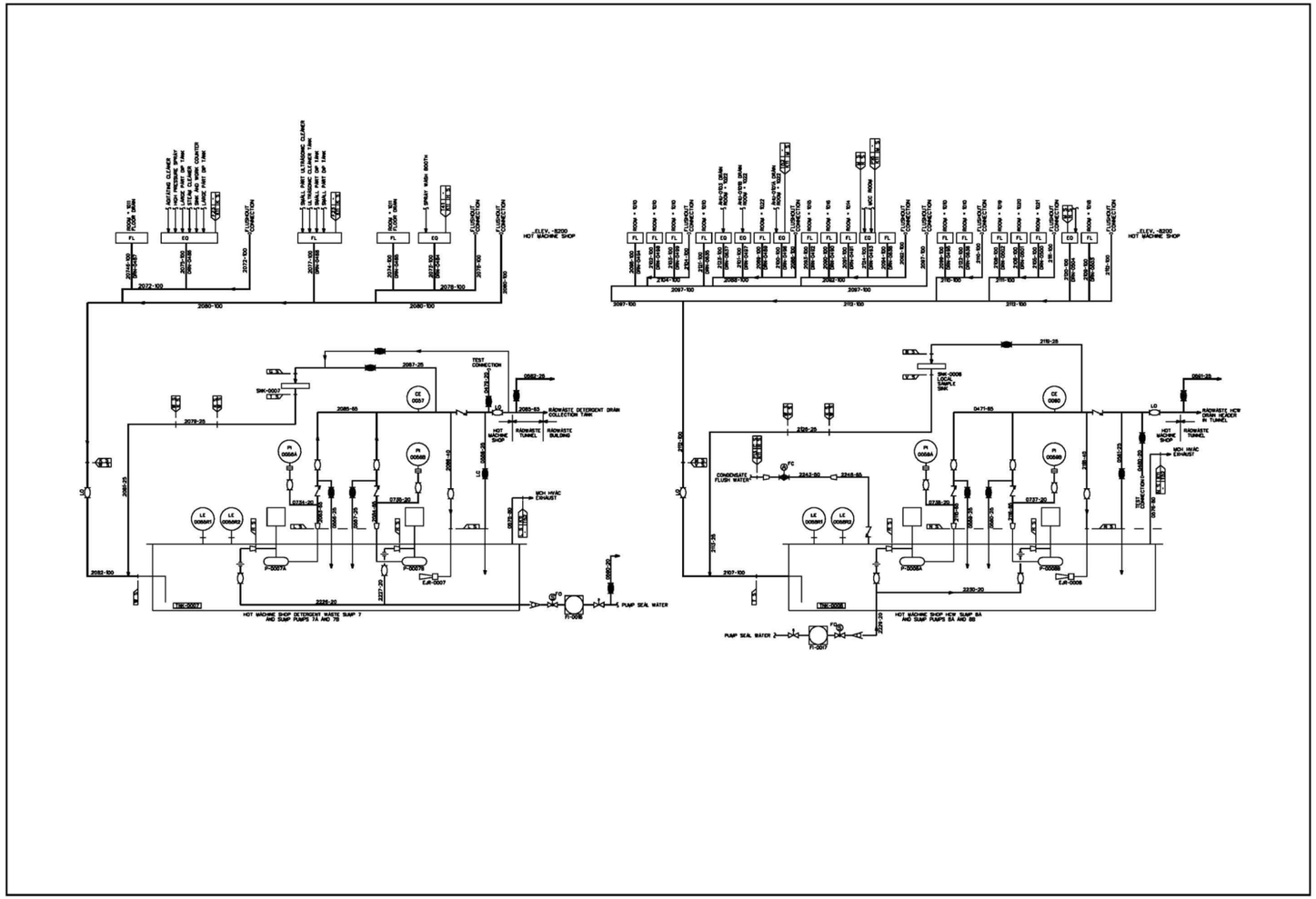

Figure 9.3-11 – Piping and Instrumentation Diagram, Radioactive Drain Transfer (Sheet 17 of 22)

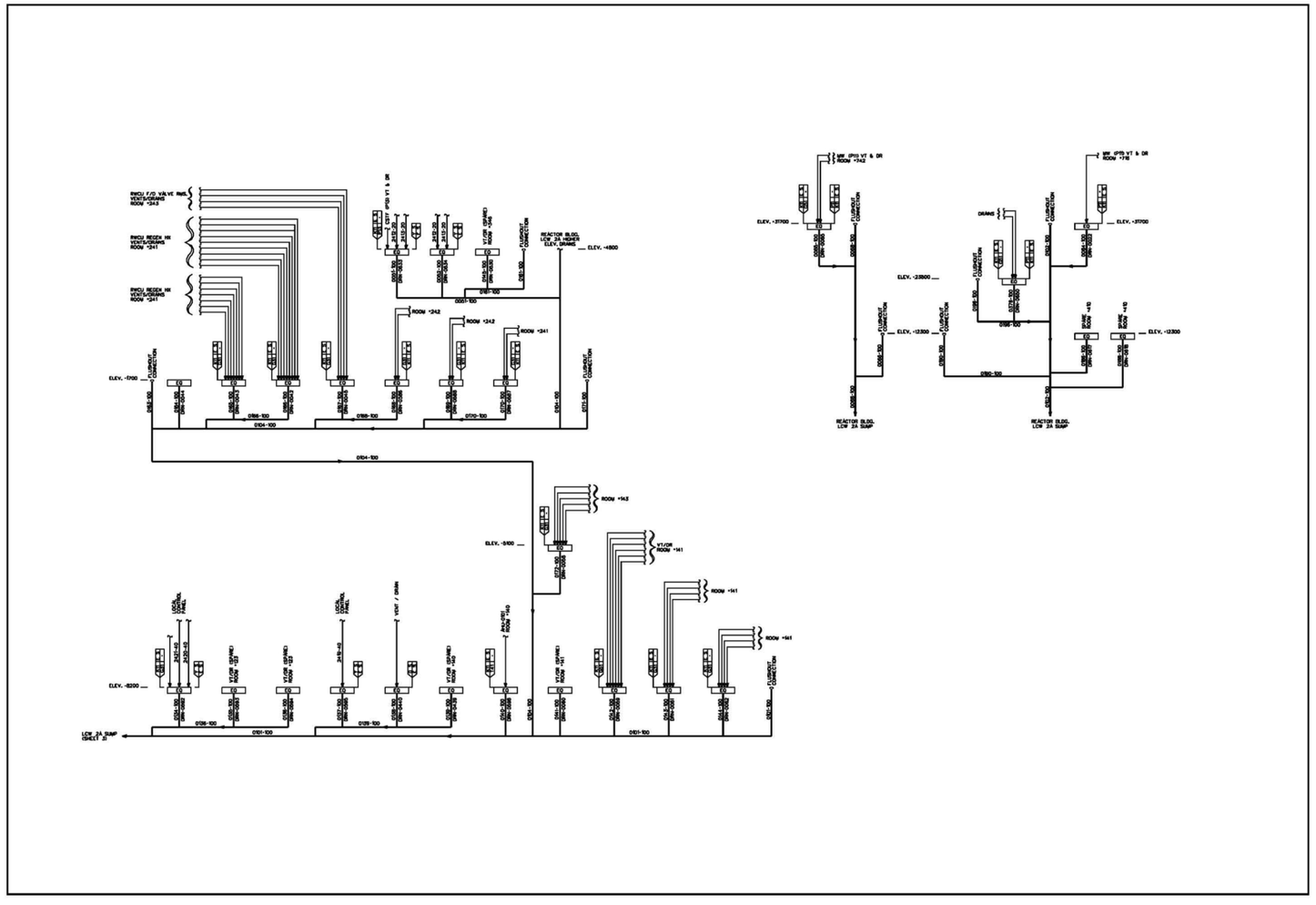

Figure 9.3-11 – Piping and Instrumentation Diagram, Radioactive Drain Transfer (Sheet 18 of 22)

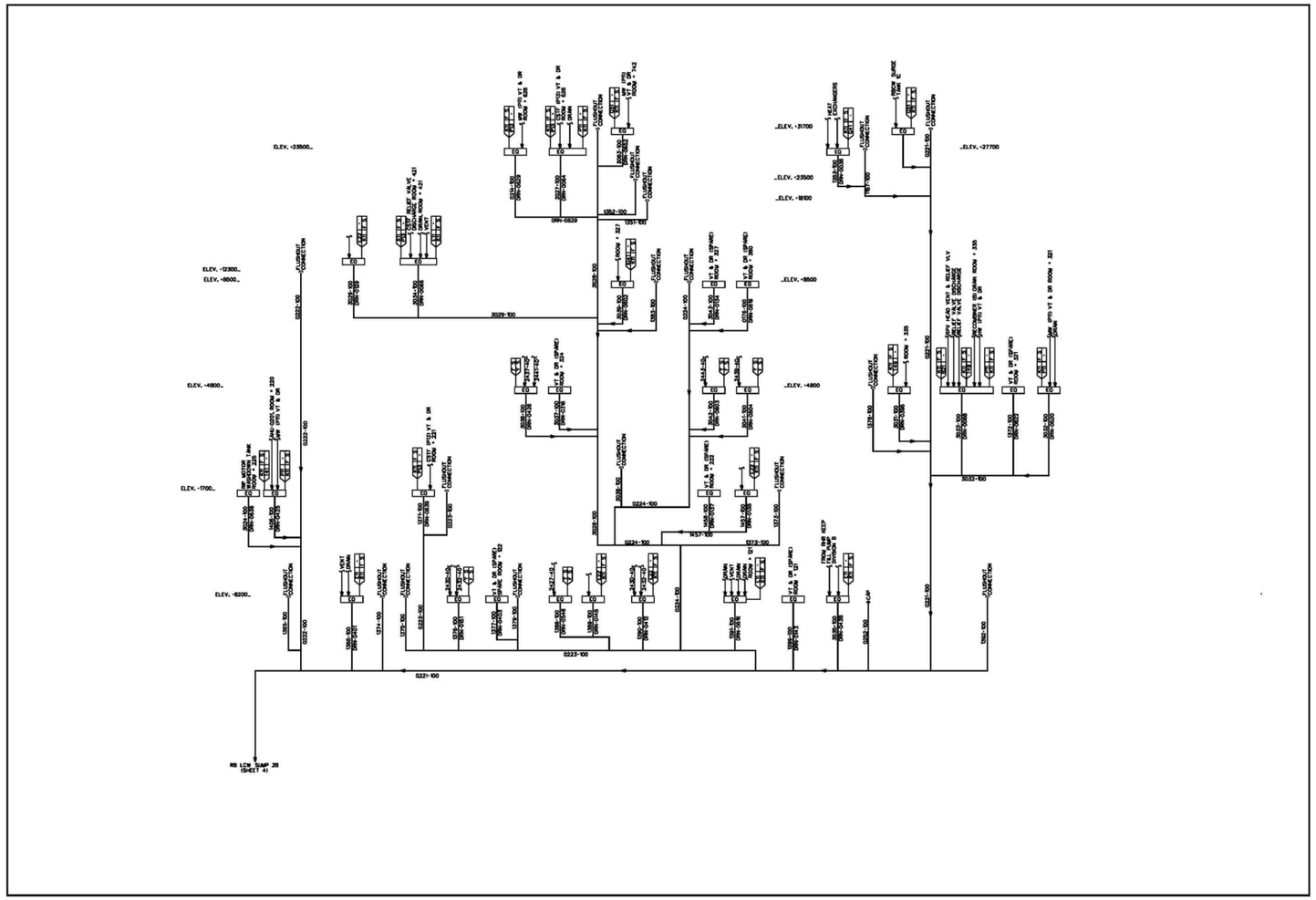

Figure 9.3-11 – Piping and Instrumentation Diagram, Radioactive Drain Transfer (Sheet 19 of 22)

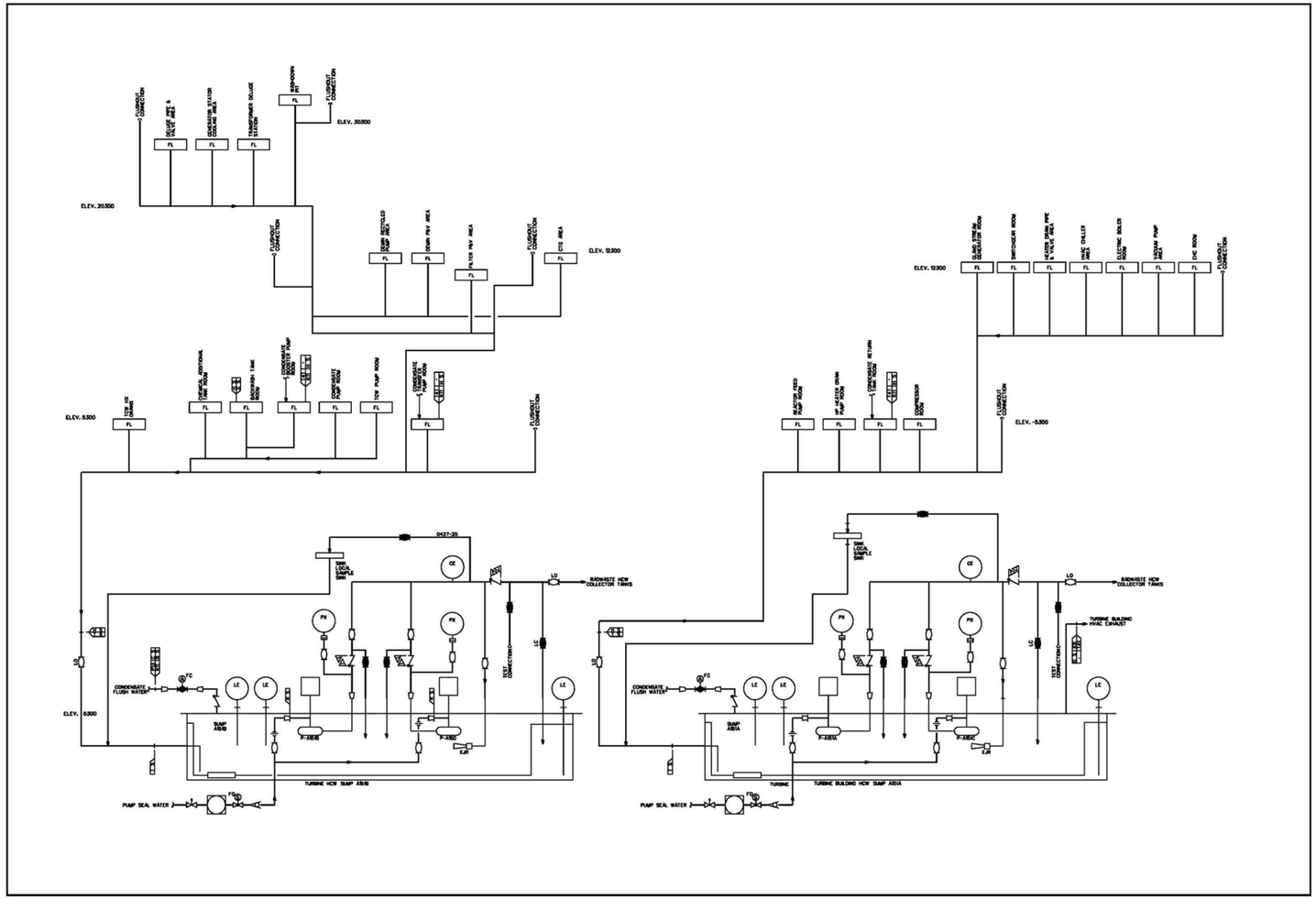

Figure 9.3-11 – Piping and Instrumentation Diagram, Radioactive Drain Transfer (Sheet 20 of 22)

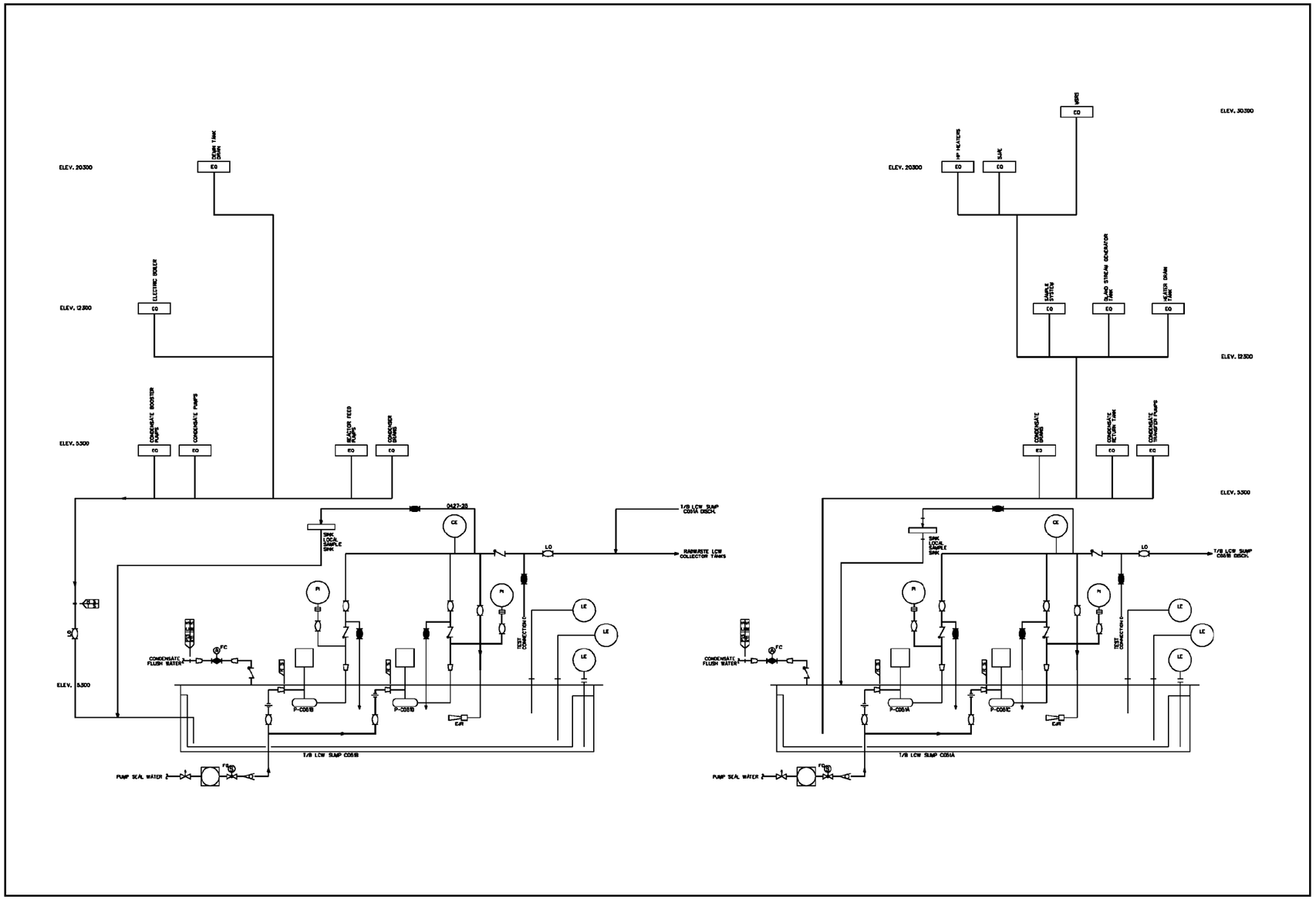

Figure 9.3-11 – Piping and Instrumentation Diagram, Radioactive Drain Transfer (Sheet 21 of 22)

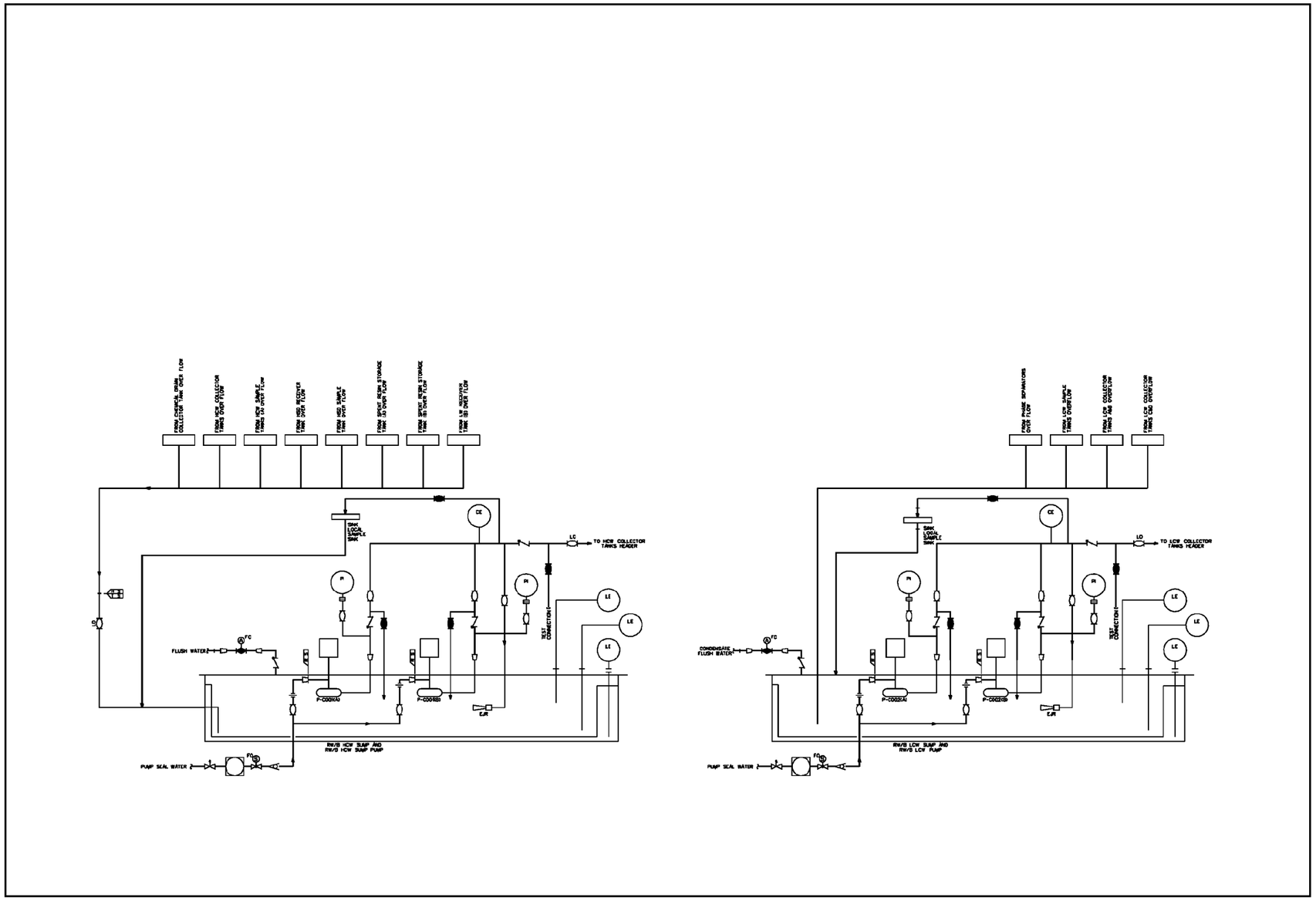

Figure 9.3-11 – Piping and Instrumentation Diagram, Radioactive Drain Transfer (Sheet 22 of 22)