NOTES:

1. ALL EQUIPMENT AND DEVICE NUMBERS SHOWN ON THIS DIAGRAM ARE PREFIXED BY C12– UNLESS OTHERWISE NOTED.
2. REFER TO THE RCIS IBD (C11–1030) FOR ROD MOVEMENT CONTROL LOGIC OTHER THAN HYDRAULIC SCRAM.
3. THE CRD SYSTEM SHALL BE DESIGNED IN ACCORDANCE WITH THE DESIGN SPECIFICATION C12–4010
4. UNLESS OTHERWISE NOTED, ALL CONTROL SWITCHES SHALL BE THREE–POSITION SWITCHES WITH "CLOSE" – "NORMAL" – "OPEN" SPRING RETURN TO "NORMAL" FROM "CLOSE" OR "OPEN"
5. BOTH VALVE POSITION INDICATION LIGHTS SHALL BE "ON" WHEN VALVE IS NOT FULLY CLOSED OR NOT FULLY OPEN. RED LIGHT SHALL BE "ON" FOR FULLY OPEN VALVE AND GREEN LIGHT SHALL BE "ON" FOR FULLY CLOSED VALVED.
6. UNLESS NOTED OTHERWISE. THE STADARD LOGIC CONVENTION (I.E., ENERGIZE TO TRIP) IS UTILIZED IN THIS DIAGRAM.
7. THE TOTAL NUMBER OF TRANSFER POINTS USED IN THIS DIAGRAM IS 4.
8. THE SCRAM CIRCUIT DIAGRAM IS SHOWN WITH NORMAL "NO TRIP" CONDITIONS OF OPERATION. TRIP CONDITIONS RESULT FROM LOGIC "LOW" STATES OR LOSS OF SIGNAL (FAIL SAFE) FROM THE REACTOR PROTECTION SYSTEM (C71)
9. FMCRD A AND FMCRD B ARE THE TWO DRIVES ASSOCIATED WITH THE SAME HCU
10. THE LOGIC AND VALVE POSITION INDICATION LIGHTS SHOWN INSIDE THE DASHED LINES MAY BE LOCATED EITHER IN THE RCIS PANELS IN THE REACTOR BUILDING OR IN THE HCU ASSEMBLY.
11. AN ALTERNATE SWITCH DESIGN MAY BE SELECTED IF JUSTIFIED BY MAN–MACHINE INTERFACE CONSIDERATIONS.

SH NO.	TITLE
1	COVER/CONTENTS/NOTES
2	CONTROL ROD DRIVE PUMP C001A(B)
3	CRD PUMP C001A(B) AUXILIARY OIL PUMP
3	SCRAM CIRCUIT
4	AIR HEADER DUMP VALVES F041 AND F042
5	ANNUNCIATORS
6	FLOW CONTROL VALVE F010A(B)
7	CRD PURGE WATER MAKE–UP VALVE D004–143
8	ARI VALVES F043, F044, F047, F048A(B), F049A(B)

SUPPLEMENTAL DOCUMENTS UNDER THE FOLLOWING IDENTITIES ARE TO BE USED IN CONJUNCTION WITH THIS DRAWING.

		MPL NO.
1.	CONTROL ROD DRIVE SYSTEM, P&ID	C12–1010
2.	CONTROL ROD DRIVE SYSTEM, DESIGN SPEC	C12–4010
3.	REACTOR PROTECTION SYSTEM, IBD	C71–1030
4.	ROD CONTROL AND INFORMATION SYS, IBD	C11–1030
5.	RECIRCULATION FLOW CONTROL SYS, IBD	C81–1030
6.	ROD CONTROL AND INFORMATION SYS, IED	C11–1040

LEGEND:

(BL) – BLUE LIGHT

LOPP – LOSS OF PREFERRED POWER

MPL NO. C12–1030

Figure 7.7-4 – Control Rod Drive System IBD (Sheet 1 of 8)

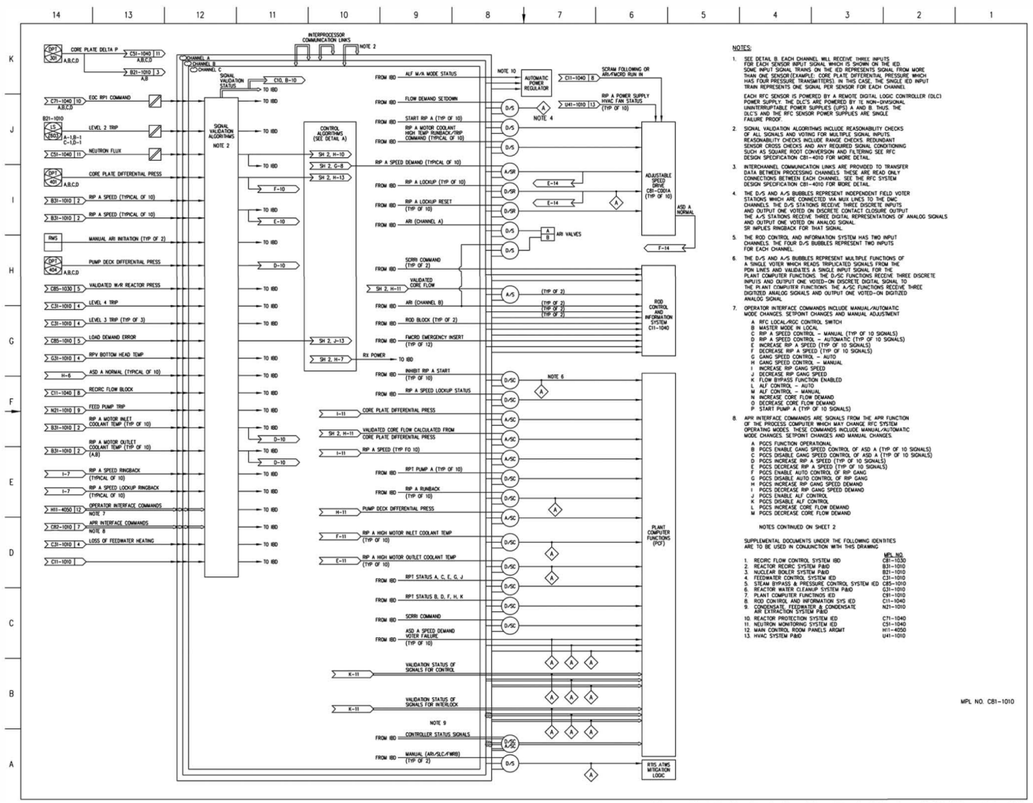

Figure 7.7-5 – Recirculation Flow Control System IED (Sheet 1 of 2)

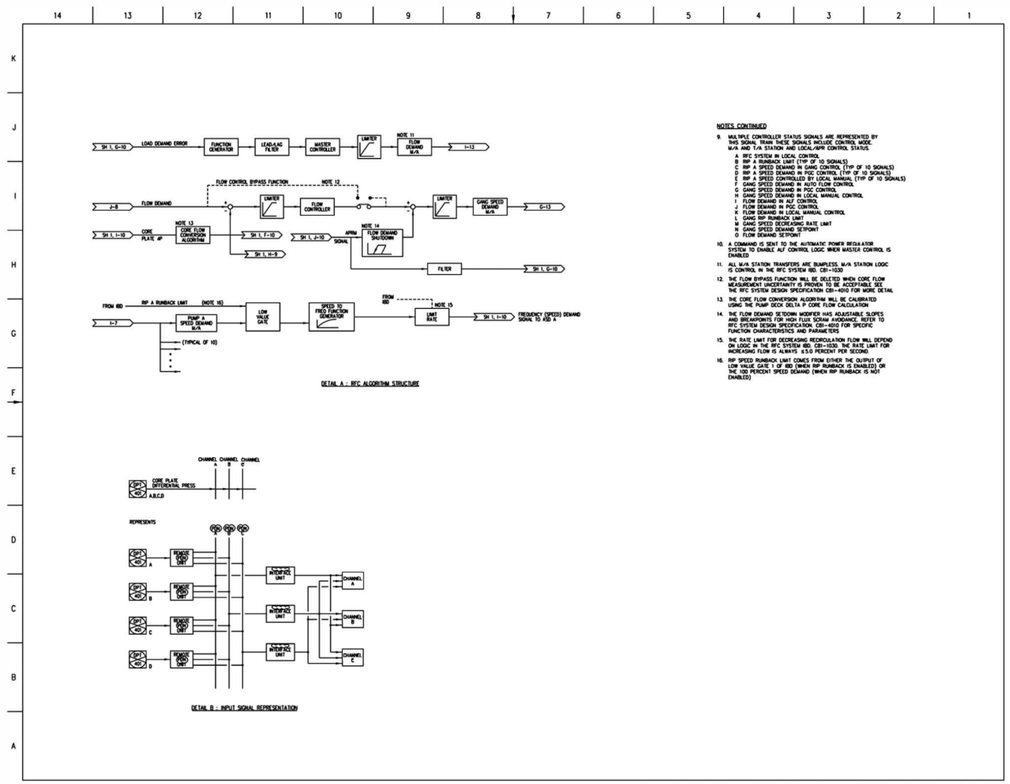

NOTES CONTINUED

9. MULTIPLE CONTROLLER STATUS SIGNALS ARE REPRESENTED BY THIS SIGNAL TRAIN THESE SIGNALS INCLUDE CONTROL MODE, M/A AND T/A STATION AND LOCAL/RPM CONTROL STATUS.
   A RFC SYSTEM IN LOCAL CONTROL
   B RIP A RUNBACK LIMIT (TYP OF 10 SIGNALS)
   C RIP A SPEED DEMAND IN AUTO CONTROL (TYP OF 10 SIGNALS)
   D RIP A SPEED DEMAND IN PGC CONTROL (TYP OF 10 SIGNALS)
   E RIP A SPEED CONTROLLED BY LOCAL MANUAL (TYP OF 10 SIGNALS)
   F GANG SPEED DEMAND IN AUTO FLOW CONTROL
   G GANG SPEED DEMAND IN PGC CONTROL
   H GANG SPEED DEMAND IN LOCAL MANUAL CONTROL
   I FLOW DEMAND IN AUT CONTROL
   J FLOW DEMAND IN PGC CONTROL
   K FLOW DEMAND IN LOCAL MANUAL CONTROL
   L GANG RIP RUNBACK LIMIT
   M GANG SPEED DEMAND RATE LIMIT
   N GANG SPEED DEMAND SETPOINT
   O FLOW DEMAND SETPOINT
10. A COMMAND IS SENT TO THE AUTOMATIC POWER REGULATOR SYSTEM TO ENABLE A/T CONTROL LOGIC WHEN MASTER CONTROL IS ENABLED.
11. ALL M/A STATION TRANSFERS ARE BUMPLESS. M/A STATION LOGIC IS CONTROL IN THE RFC SYSTEM IED. CBI-1530
12. THE FLOW BYPASS FUNCTION WILL BE DELETED WHEN CORE FLOW MEASUREMENT UNCERTAINTY IS PROVEN TO BE ACCEPTABLE. SEE THE RFC SYSTEM DESIGN SPECIFICATION CBI-4010 FOR MORE DETAIL
13. THE CORE FLOW CONVERSION ALGORITHM WILL BE CALIBRATED USING THE PUMP DECK DELTA P CORE FLOW CALCULATION
14. THE FLOW DEMAND SETDOWN MODIFIER HAS ADJUSTABLE SLOPES AND BREAKPOINTS FOR HIGH FLUX SCRAM AVOIDANCE. REFER TO RFC SYSTEM DESIGN SPECIFICATION CBI-4010 FOR SPECIFIC FUNCTION CHARACTERISTICS AND PARAMETERS
15. THE RATE LIMIT FOR DECREASING RECIRCULATION FLOW WILL DEPEND ON LOGIC IN THE RFC SYSTEM IED. CBI-1530 THE RATE LIMIT FOR INCREASING FLOW IS ALWAYS 2.5 PERCENT PER SECOND.
16. RIP SPEED RUNBACK LIMIT COMES FROM EITHER THE OUTPUT OF LOW VALUE GATE 1 OF IED (WHEN RIP RUNBACK IS ENABLED) OR THE 100 PERCENT SPEED DEMAND (WHEN RIP RUNBACK IS NOT ENABLED)

Figure 7.7-5 – Recirculation Flow Control System IED (Sheet 2 of 2)

SH	TITLE
1	CONTENTS, NOTES AND SUPPLEMENTAL DOCUMENTS
2	LOCAL/APR CONTROL LOGIC
2	MANUAL SIGNALS TO SSLC ATWS MITIGATION LOGIC
3	PUMP START INHIBIT LOGIC, STABILITY CONTROL AND PROTECTION LOGIC
4	REACTOR INTERNAL PUMP (RIP) TRIP LOGIC
5	RIP A SPEED DEMAND M/A STATION
6	GANG SPEED DEMAND M/A STATION
7	AUTO LOAD FOLLOWING (ALF) CONTROL M/A STATION
8	RECIRCULATION FLOW RUNBACK LOGIC
9	RATE DECREASE LIMIT LOGIC LOCK UP RINGBACK LOGIC DMC CONTROLLER FAILURE

SUPPLEMENTAL DOCUMENTS UNDER THE FOLLOWING IDENTITIES ARE TO BE USED IN CONJUNCTION WITH THIS DRAWING:

		MPL NO.
1.	RECIRCULATION FLOW CONTROL SYS IED	C81-1010
2.	PLANT COMPUTER FUNCTION IED	C91-1010
3.	MAIN CONTROL ROOM PANEL ARGMT	H11-4050
4.	REACTOR RECIRC SYS P&ID	B31-1010
5.	STEAM BYPASS & PRESSURE CONTROL SYS IBD	C85-1030
6.	REACTOR WATER CLEANUP SYS P&ID	G31-1010
7.	REACTOR PROTECTION SYS IBD	C71-1030
8.	NUCLEAR BOILER SYS P&ID	B21-1010
9.	NEUTRON MONITORING SYS IBD	C51-1030
10.	CONDENSATE, FEEDWATER, & CONDENSATE AIR EXTRACTION SYS P&ID	N21-1010
11.	FEEDWATER CONTROL SYS IBD	C31-1030
12.	ROD CONTROL & INFORMATION SYS IBD	C11-1030
13.	AUTOMATIC POWER REGULATOR IED	C82-1010

NOTES:

1. LOCAL CONTROL ALLOWS THE OPERATOR TO EITHER MANUALLY MANIPULATE DEMAND SIGNALS OR PLACE THEM IN AUTOMATIC CONTROL AT MANUAL STATIONS. APR SYSTEM CONTROL MODE ALLOWS THE COMPUTER TO MANIPULATE DEMAND SIGNALS AT M/A STATIONS OR PLACE THEM IN AUTOMATIC CONTROL.

2. RIPS ARE INDIVIDUALLY RUNBACK AND THEN TRIPPED (AFTER MINIMUM SPEED IS REACHED) WHEN THIS CONDITION IS SATISFIED THE INDIVIDUAL RIP RUNBACK LIMIT WHICH IS INVOKED HERE HAS PRECEDENT OVER THE GANG RUNBACK LIMIT ON SHEET 6.

3. THE PUSH BUTTON SWITCH (PBS) AND TOUCH SCREEN BUTTON (TSB) SEND A LOGICAL "1" SIGNAL FOR AT LEAST ONE COMPLETE SAMPLING PERIOD.

4. THE WIDE RANGE DOME PRESSURE SIGNAL IS VALIDATED BY THE STEAM BYPASS AND PRESSURE CONTROL SYSTEM FROM THREE INDEPENDENT PRESSURE SENSOR INPUTS.

5. THE REMAINING FOUR OR SIX RIPS WILL BE RUNBACK TO MINIMUM SPEED AFTER A TRIP OF THE OTHER SIX OR FOUR. THIS WILL ENHANCE GANG RIP RESTART CAPABILITIES.

6. SATISFACTION OF THE RECIRC RUNBACK CONDITION WILL ENABLE THE APPROPIATE RECIRC RUNBACK LIMIT FROM THE LOW VALUE GATE. THIS LIMIT WILL BE SENT THROUGH LOW VALUE GATE 2 (SHOWN ON RFC IED C81-1010, SHEET 2, DETAIL "A") WHICH WILL SEND THE RUNBACK LIMIT TO THE GANG OF ASDS IF IT IS LOWER THAN THE CURRENT GANG SPEED DEMAND. AFTER A RECIRC RUNBACK, THE GANG SPEED DEMAND WILL BE UPDATED TO EQUAL THE OUTPUT OF LOW VALUE GATE 2. THUS IF THE RUNBACK LIMIT PASSES THROUGH LOW VALUE GATE 2, THE GANG SPEED DEMAND WILL REMAIN EQUAL TO THE RUNBACK LIMIT AFTER THE RUNBACK CONDITION DISABLED.

7. THIS BLOCK SYMBOL REPRESENTS THE MULTIPLICATION OF INPUT SIGNALS. IN THIS APPLICATION, THE ANALOG SPEED SIGNALS ARE MULTIPLIED BY THE DISCRETE SIGNALS. IF THE DISCRETE SIGNAL IS A LOGICAL "1", THE SPEED SIGNAL IS PASSED ON THE AVERAGING FUNCTION. IF THE DISCRETE SIGNAL IS LOW "0", THE SPEED SIGNAL IS NOT PASSED.

MPL NO. C81-1030

Figure 7.7-7 – Recirculation Flow Control System IBD (Sheet 1 of 9)

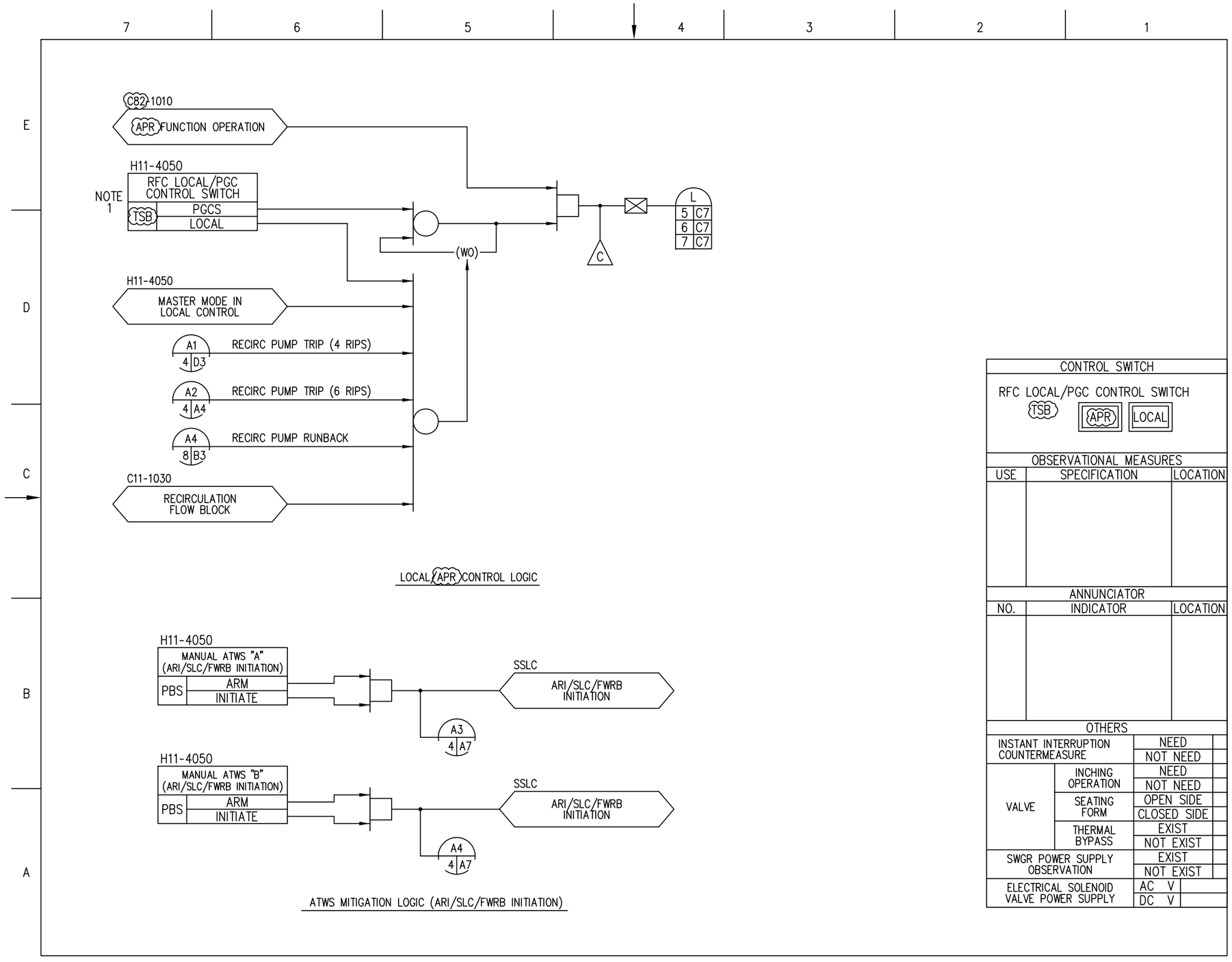

Figure 7.7-7 – Recirculation Flow Control System IBD (Sheet 2 of 9)

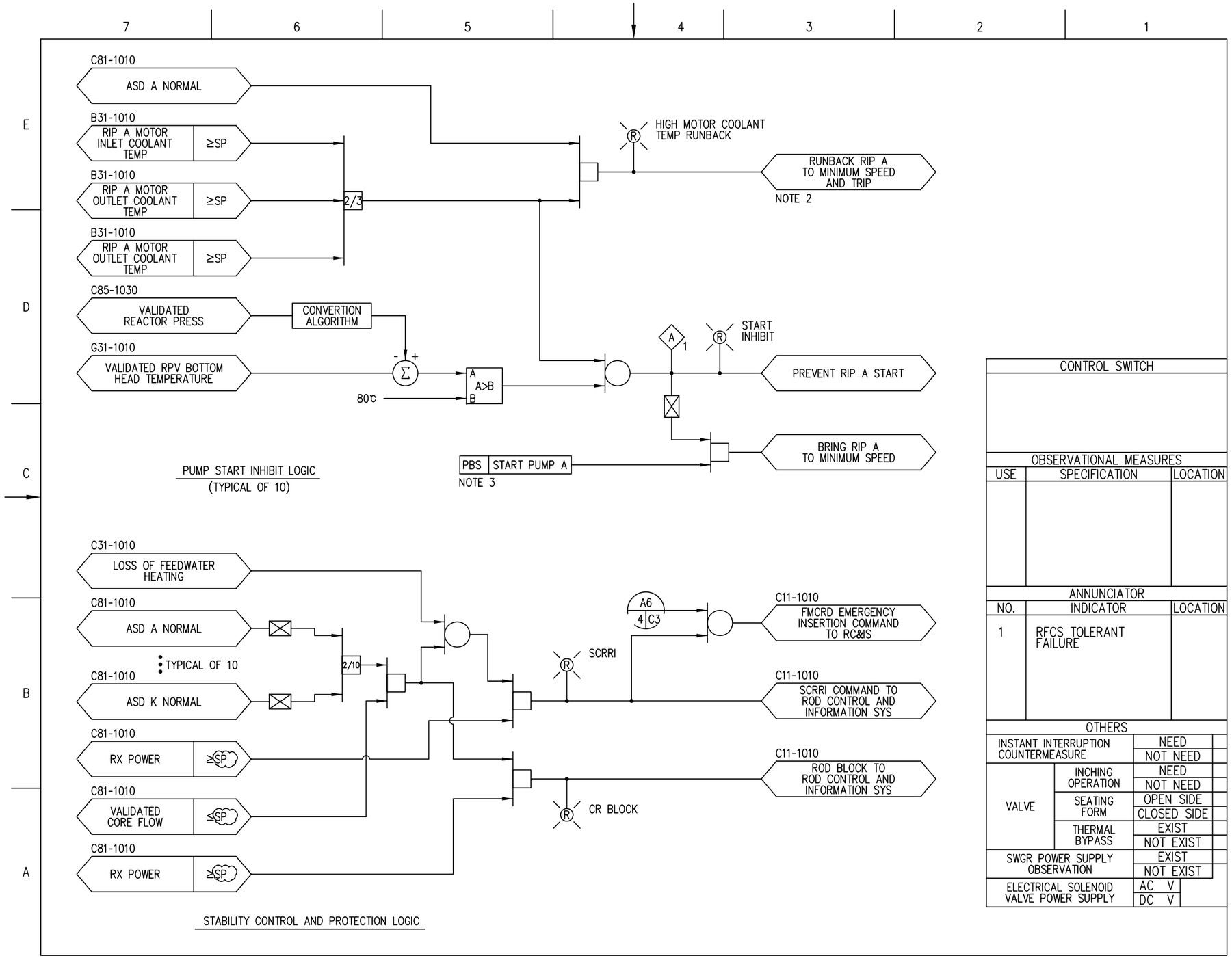

Figure 7.7-7 – Recirculation Flow Control System IBD (Sheet 3 of 9)

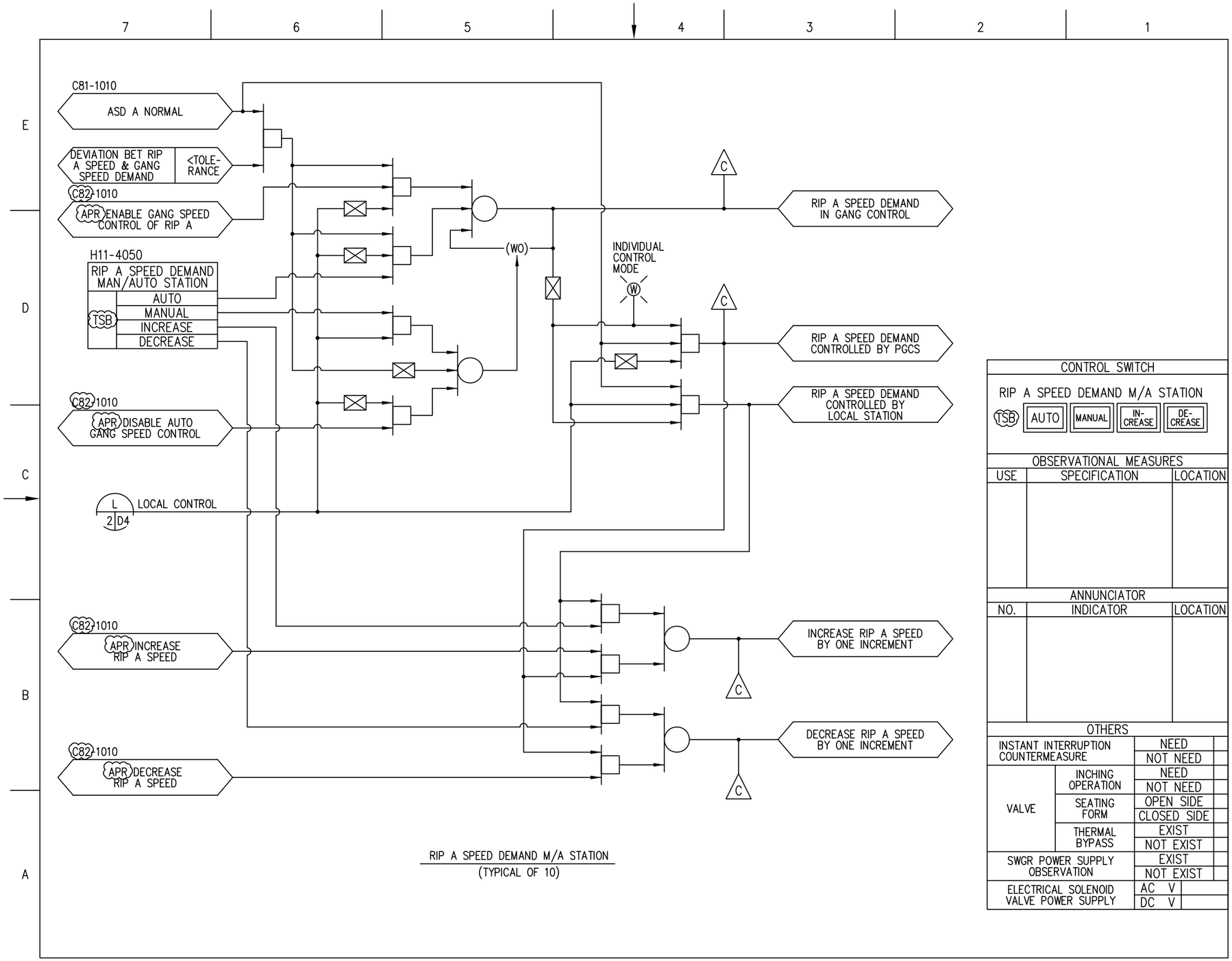

Figure 7.7-7 – Recirculation Flow Control System IBD (Sheet 5 of 9)

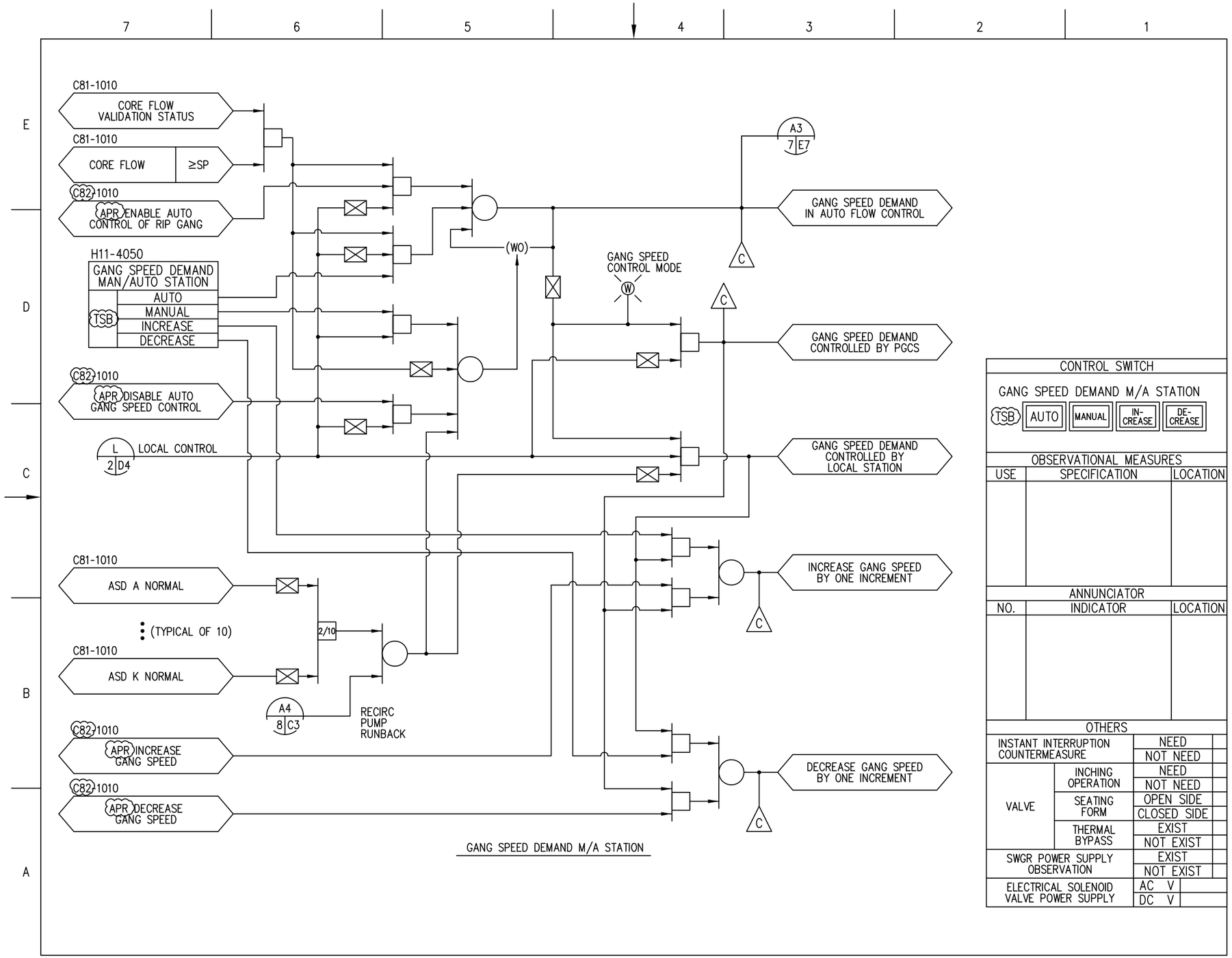

Figure 7.7-7 – Recirculation Flow Control System IBD (Sheet 6 of 9)

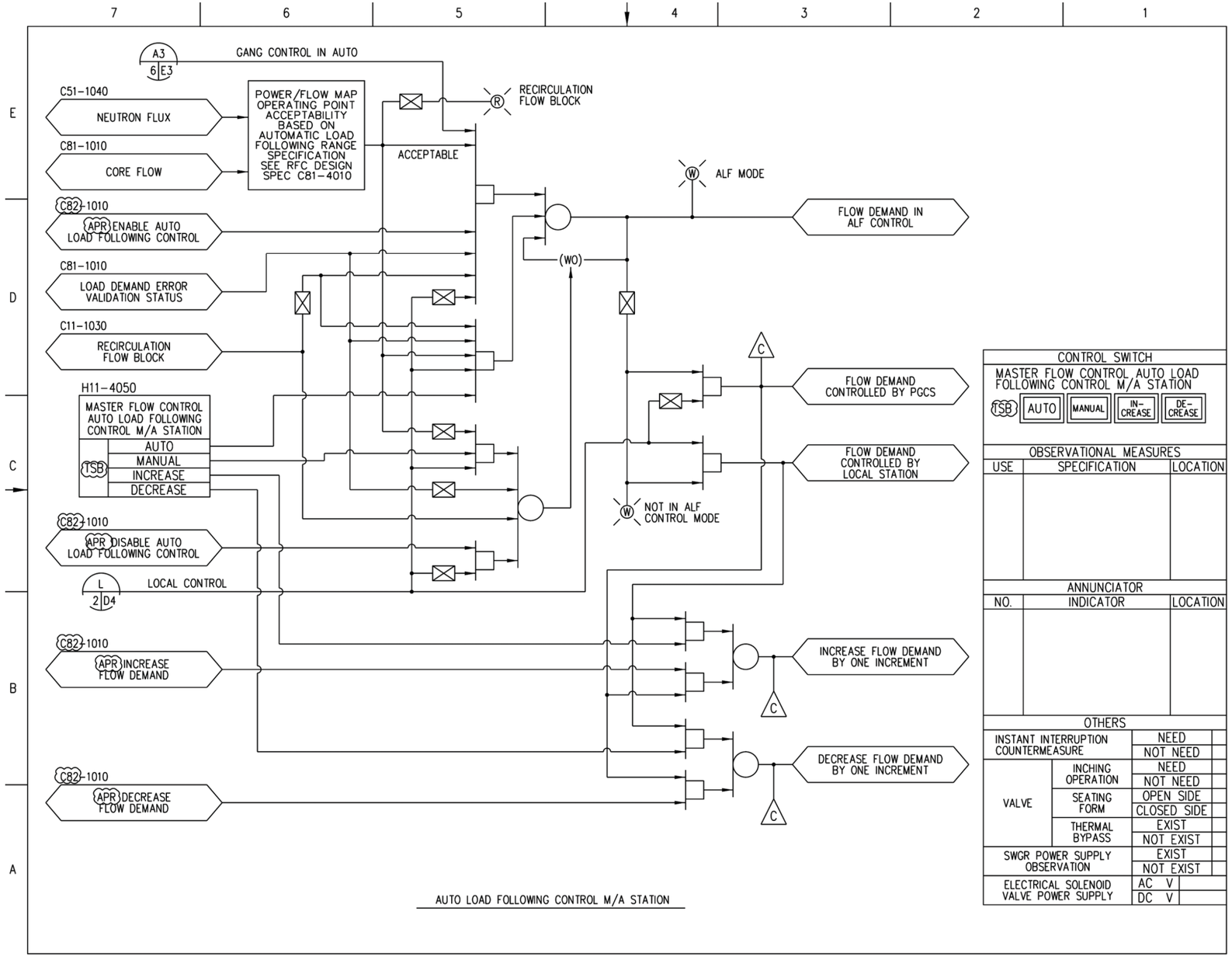

Figure 7.7-7 – Recirculation Flow Control System IBD (Sheet 7 of 9)

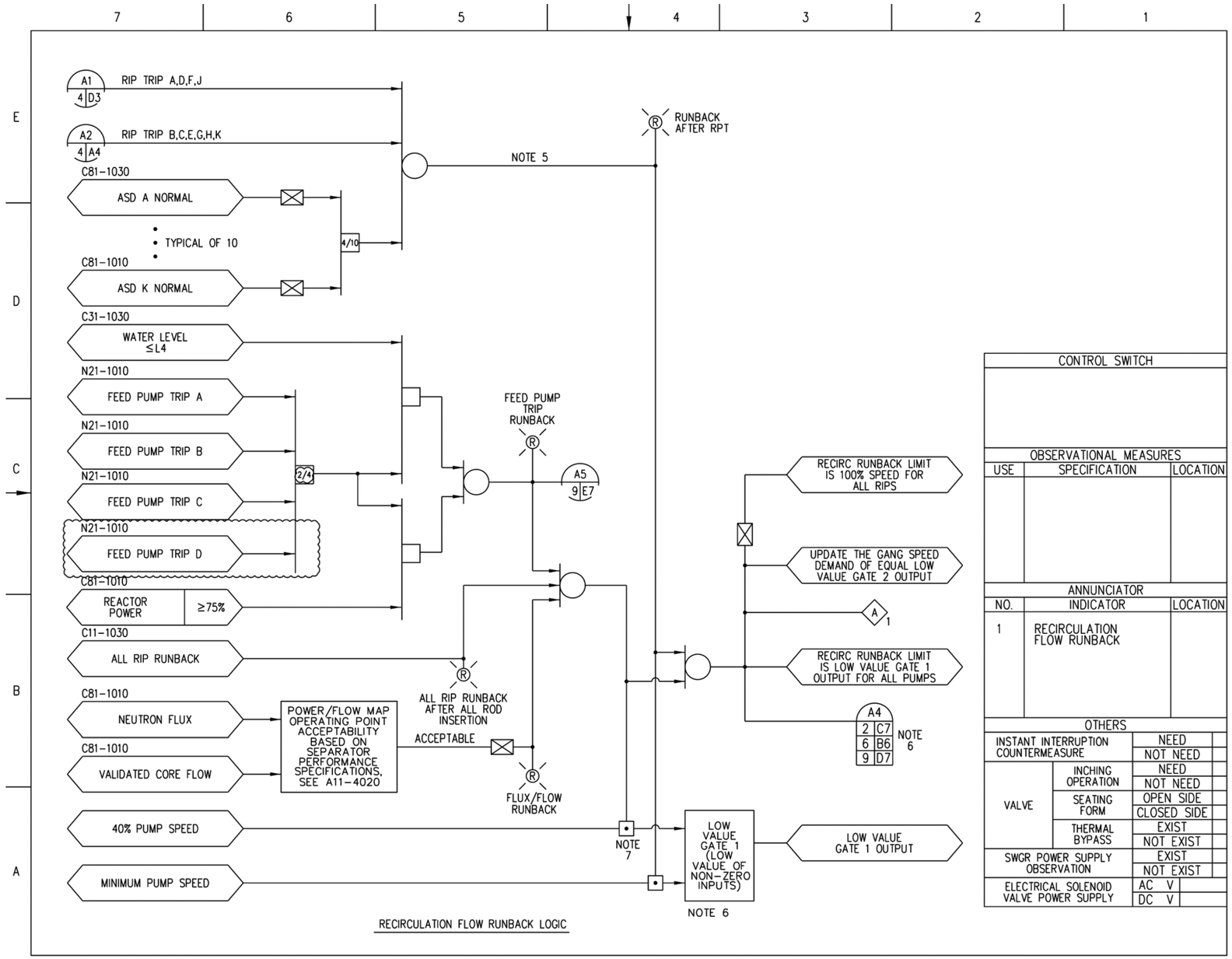

Figure 7.7-7 – Recirculation Flow Control System IBD (Sheet 8 of 9)

NOTES

1. EACH ( ) CHANNEL WILL RECEIVE ( ) FOR EACH INPUT SIGNAL WHICH IS SHOWN ON THE IED. SOME INPUT SIGNAL TRAINS ON THE IED REPRESENT SIGNALS FROM MORE THAN ONE IN THIS CASE, THE SINGLE IED INPUT TRAIN REPRESENTS ONE SIGNAL PER SENSOR TO EACH ( ) CHANNEL. SEE DETAIL "B".
2. MULTIPLE OPERATOR INTERFACE COMMANDS ARE REPRESENTED BY THIS SIGNAL. THESE COMMANDS ARE LISTED BELOW. SEE THE FEEDWATER CONTROL SYSTEM IBD FOR MORE DETAIL.
   A. FEEDWATER CONTROL LOCAL/PGC CONTROL SELECTION (2 SIGNALS)
   B. 3E/1E MODE SELECTION (2 SIGNALS)
   C. RFP A FLOW CONTROL MANUAL/AUTO SELECTION, INCREASE, DECREASE, FAST (5 SIGNALS)
   D. RFP B FLOW CONTROL MANUAL/AUTO SELECTION, INCREASE, DECREASE, FAST (5 SIGNALS)
   E. RFP C FLOW CONTROL MANUAL/AUTO SELECTION, INCREASE, DECREASE, FAST (5 SIGNALS)
   F. RFP D FLOW CONTROL MANUAL/AUTO SELECTION, INCREASE, DECREASE, FAST (5 SIGNALS)
   G. TPCV FLOW CONTROL MANUAL/AUTO SELECTION, INCREASE, DECREASE, FAST (5 SIGNALS)
   H. CUW DUMP VALVE FLOW CONTROL MANUAL/AUTO SELECTION, INCREASE, DECREASE, FAST (5 SIGNALS)
   I. CUW DUMP VALVE LEVEL CONTROL AUTO/MANUAL SELECTION, INCREASE, DECREASE, FAST (5 SIGNALS)
   J. REACTOR WATER LEVEL SETPOINT INCREASE, DECREASE (2 SIGNALS)
   K. REACTOR WATER LEVEL SETPOINT SETDOWN RESET LOGIC.
3. MULTIPLE PGCS SYSTEM INTERFACE COMMANDS ARE REPRESENTED BY THIS SIGNAL. THESE COMMANDS ARE LISTED BELOW. SEE THE FEEDWATER CONTROL SYSTEM IBD FOR MODE DETAIL.
   A. PGCS FUNCTION OPERATIONAL (1 SIGNAL)
   B. 3E/1E MODE SELECTION (2 SIGNALS)
   C. ENABLE/DISABLE RFP A AUTOMATIC FLOW CONTROL, INCREASE, DECREASE, FAST (5 SIGNALS)
   D. ENABLE/DISABLE RFP B AUTOMATIC FLOW CONTROL, INCREASE, DECREASE, FAST (5 SIGNALS)
   E. ENABLE/DISABLE RFP C AUTOMATIC FLOW CONTROL, INCREASE, DECREASE, FAST (5 SIGNALS)
   F. ENABLE/DISABLE RFP D AUTOMATIC FLOW CONTROL, INCREASE, DECREASE, FAST (5 SIGNALS)
   G. ENABLE/DISABLE TPCV FLOW CONTROL, INCREASE, DECREASE, FAST (5 SIGNALS)
   H. ENABLE/DISABLE CUW DUMP VALVE AUTOMATIC FLOW CONTROL, INCREASE, DECREASE, FAST (5 SIGNALS)
   I. ENABLE/DISABLE CUW DUMP VALVE AUTOMATIC LEVEL CONTROL, INCREASE, DECREASE, FAST (5 SIGNALS)
4. INTERCHANNEL COMMUNICATION LINKS ARE PROVIDED TO TRANSFER DATA BETWEEN PROCESSING CHANNELS. THESE ARE READ ONLY CONNECTIONS BETWEEN ( ) CHANNELS.
5. THE D/S AND A/S BUBBLES REPRESENT INDEPENDENT FIELD VOTER STATIONS WHICH ARE CONNECTED VIA (POD) LINES TO THE ( ) CHANNELS. THE D/S STATIONS RECEIVE THREE DISCRETE INPUTS AND OUTPUT ONE VOTED ON DISCRETE CONTACT CLOSURE OUTPUT. THE A/S STATIONS RECEIVE THREE DIGITAL REPRESENTATIONS OF ANALOG SIGNALS AND OUTPUT ONE VOTED ON ANALOG SIGNAL. SUFFIX R IN D/SR AND A/SR DENOTES THAT A RINGBACK SIGNAL IS SENT BACK TO THE PROCESS CONTROLLERS FOR VOTER FAILURE DETECTION.
6. THE D/SC AND A/SC BUBBLES REPRESENT MULTIPLE FUNCTIONS OF A SINGLE VOTER WHICH READS TRIPLICATED SIGNALS FROM THE (POD) LINES AND VALIDATES A SINGLE INPUT SIGNALS FOR THE (PLANT COMPUTER FUNCTIONS). THE D/SC FUNCTIONS RECEIVE THREE DISCRETE INPUTS AND OUTPUT ONE VOTED ON DISCRETE DIGITAL SIGNAL TO THE (PLANT COMPUTER FUNCTIONS). THE A/SC FUNCTIONS RECEIVE THREE DIGITIZED ANALOG SIGNALS AND OUTPUT ONE VOTED ON DIGITIZED ANALOG SIGNAL.
7. MULTIPLE CONTROLLER STATUS SIGNALS ARE REPRESENTED BY THIS SIGNAL TRAIN. THESE STATUS SIGNALS ARE LISTED BELOW.
   A. RFP A AUTO CONTROL ENABLED
   B. RFP B AUTO CONTROL ENABLED
   C. RFP C AUTO CONTROL ENABLED
   D. RFP D AUTO CONTROL ENABLED
   E. RFP A CONTROL IN AUTO/MANUAL/PGC (3 SIGNALS)
   F. RFP B CONTROL IN AUTO/MANUAL/PGC (3 SIGNALS)
   G. RFP C CONTROL IN AUTO/MANUAL/PGC (3 SIGNALS)
   H. RFP D CONTROL IN AUTO/MANUAL/PGC (3 SIGNALS)
   I. TPCV CONTROL IN AUTO/MANUAL/PGC (3 SIGNALS)
   J. CUW DUMP VALVE FLOW CONTROL IN AUTO/MANUAL/PGC (3 SIGNALS)
   K. CUW DUMP VALVE LEVEL CONTROL IN AUTO/MANUAL/PGC (3 SIGNALS)
8. RFP OPERATING STATUS SIGNALS RECEIVED FROM (VCS) 1010 SHALL BE TRUE WHEN PUMP IS RUNNING ABOVE MINIMUM SPEED.
9. ANNUNCIATOR (A) AND INDICATOR (I) TAKEOFFS GO TO THE MAIN CONTROL PANEL, H11-4050.
10. FEED PUMP FLOW LOOP M/A STATION LOGIC IS CONTAINED IN THE FEEDWATER CONTROL SYSTEM IBD, C31-1030.
11. MULTIPLE LOCKUP VOTER STATUS SIGNALS REPRESENTED BY THIS SIGNAL TRAIN.
   A. RFP A LOCKUP VOTER STATUS
   B. RFP B LOCKUP VOTER STATUS
   C. RFP C LOCKUP VOTER STATUS
   D. RFP D LOCKUP VOTER STATUS
   E. TPCV LOCKUP VOTER STATUS
   F. CUW DUMP VALVE LOCKUP VOTER STATUS
12. FT TAG NUMBER SHOULD BE IN ACCORD WITH FE TAG NUMBER IDENT NUMBERS OF FT ARE PRELIMINARY NUMBERS.
13. THE ADJUSTABLE SPEED DRIVES (ASDs) OUTPUT VARIABLE FREQUENCY AND VARIABLE VOLTAGE POWER TO THE RFP MOTORS. EACH ASD RECEIVES OPERATING STATUS SIGNALS DIRECTLY FROM THE OTHER ASDs. ASD OUTPUT IS MODULATED IN RESPONSE TO THE DEMAND SIGNAL FROM THE DMGs AND MAXIMUM OUTPUT IS LIMITED BASED ON THE NUMBER OF OPERATING ASDs. A LOCKUP SIGNAL RESULTS IN FIXED ASD OUTPUT AT THE FREQUENCY AND VOLTAGE AT THE TIME THE LOCKUP SIGNAL IS RECEIVED. A TRIP SIGNAL RESULTS IN THE REDUCTION OF ASD POWER OUTPUT TO ZERO. SEE THE FDWC SYSTEM DESIGN SPEC FOR DETAILS.
14. THE CUW DUMP VALVE CONTROL SCHEME CONSISTS OF TWO M/A STATIONS IN SERES. THE FIRST M/A STATION PASSES. THE MLC DEMAND WHEN IN AUTO OR GENERATES A FLOW DEMAND SIGNAL WHEN IN MANUAL MODE. THE SECOND M/A STATION PASSES THE CUW DUMP VALVE FLOW CONTROLLER DEMAND SIGNAL WHEN IN AUTO OR GENERATES A CUW DUMP VALVE POSITION DEMAND SIGNAL WHEN IN MANUAL MODE. THE FIRST M/A STATION IS IDENTIFIED AS THE "CUW DUMP VALVE LEVEL CONTROL M/A STATION" IN THE IBD. THE SECOND M/A STATION IS IDENTIFIED AS THE "CUW DUMP VALVE FLOW CONTROL M/A STATION" IN THE IBD. SEE DETAIL "C" AND THE IBD REF 1 FOR DETAILS.

SUPPLEMENTAL DOCUMENTS UNDER THE FOLLOWING IDENTITIES ARE TO BE USED IN CONJUNCTION WITH THIS DRAWING.

		REFERENCE DESIGNATOR
1.	FEEDWATER CONT SYS IBD	C31-1030
2.	NUCLEAR BOILER SYS P&ID	B21-1010
3.	REACTOR WATER CLEANUP SYSTEM P&ID	G31-1010
4.	TURBINE CONTROL SYSTEM IED	N32-1010
5.	PROCESS COMPUTER SYSTEM IED	C91-1010
6.	CONDENSATE, FEEDWATER AND CONDENSATE AIR EXTRACTION SYSTEM P&ID	N21-1010
7.	RECIRCULATION FLOW CONTROL SYSTEM IED	C81-1010
8.	MAIN CONTROL ROOM PANELS ARGMT	H11-4050
9.	NEUTRON MONITORING SYSTEM IED	C51-1010

MPL NO. C31-1010

Figure 7.7-8 – Feedwater Control System IED (Sheet 1 of 3)

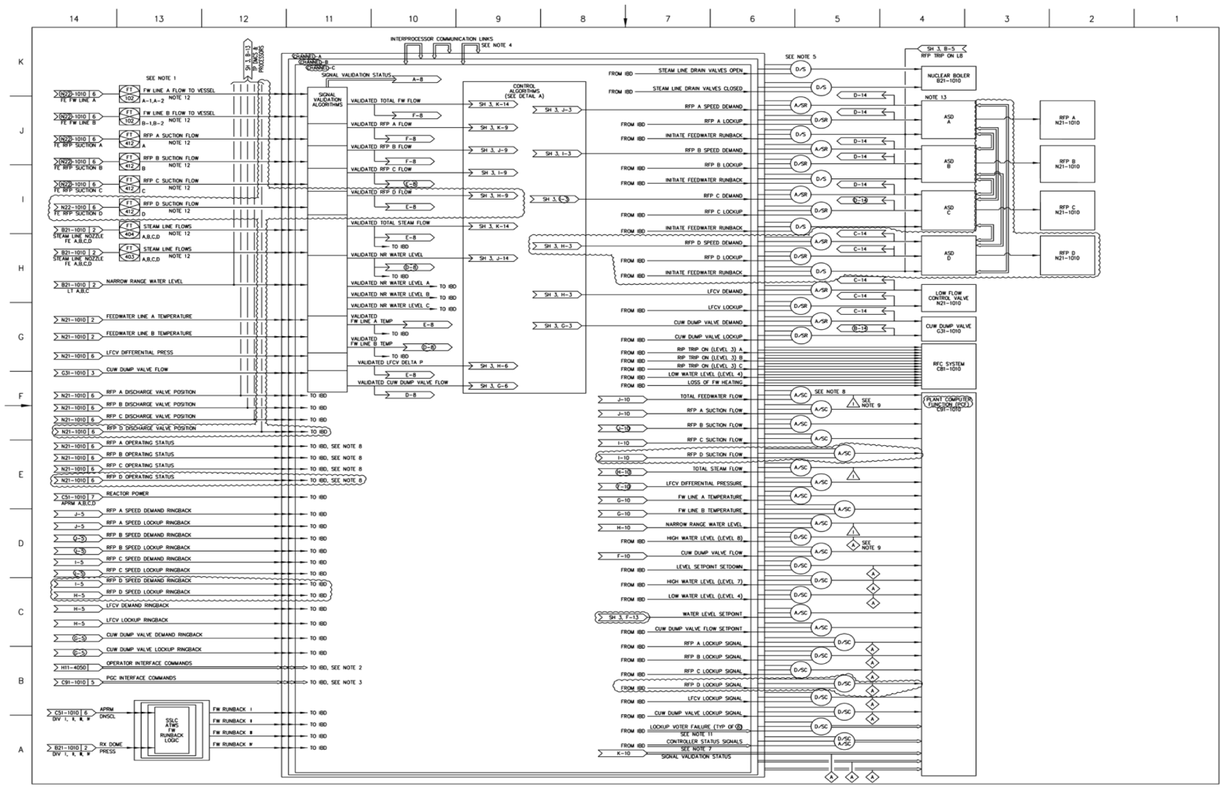

Figure 7.7-8 – Feedwater Control System IED (Sheet 2 of 3)

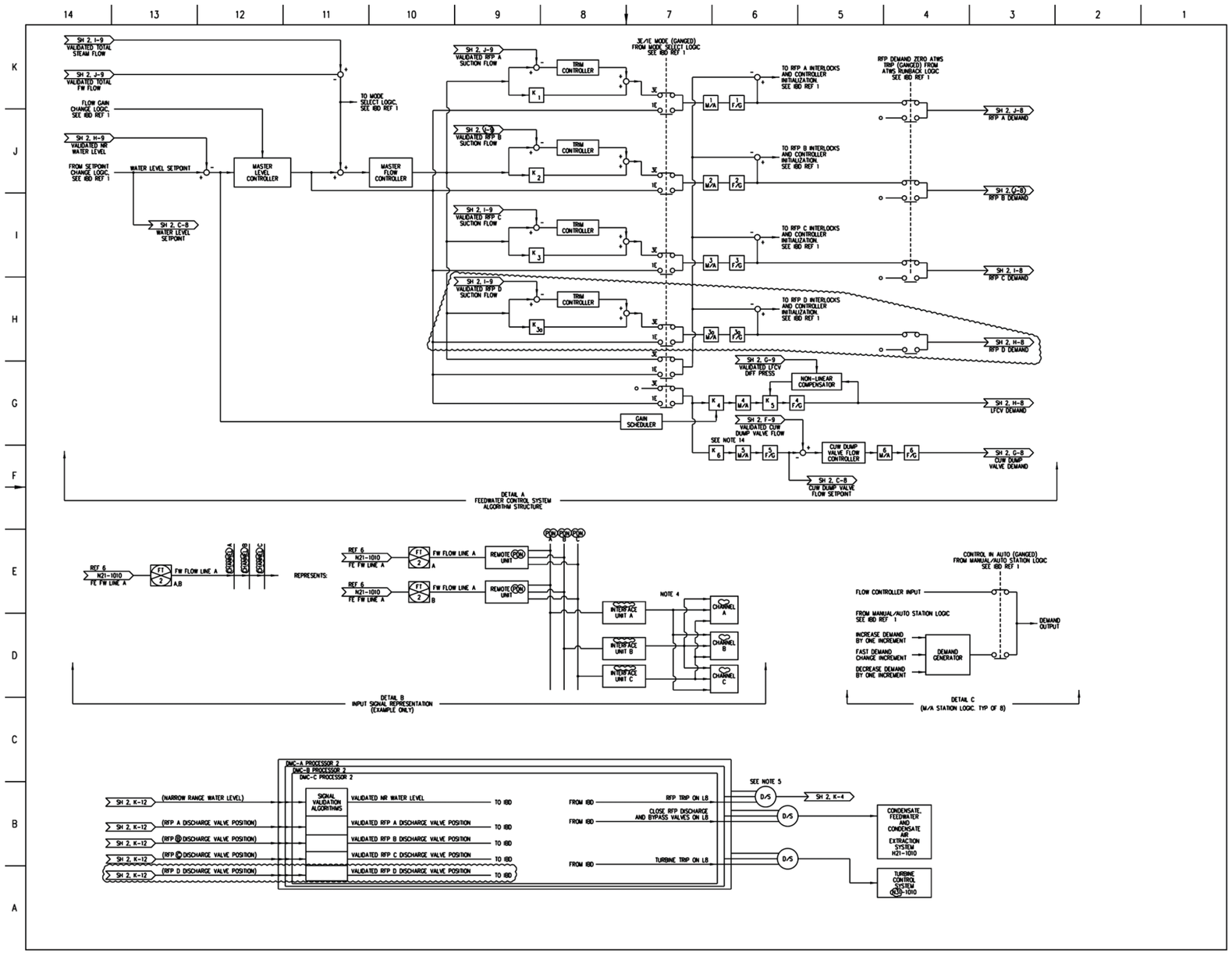

Figure 7.7-8 – Feedwater Control System IED (Sheet 3 of 3)

NOTES:

1. LOCAL CONTROL ALLOWS THE OPERATOR TO EITHER MANUALLY MANIPULATE DEMAND SIGNALS OR PLACE THEM IN AUTOMATIC CONTROL AT MANUAL/AUTO STATIONS. POWER GENERATION CONTROL SYSTEM(PGC) CONTROL ALLOWS THE COMPUTER TO DIRECTLY MANIPULATE DEMAND SIGNALS AT THE M/A STATION OR PLACE THEM IN AUTOMATIC CONTROL.
2. MULTIPLE TRANSMITTER SIGNAL INPUTS FOR SIMILAR PROCESS SIGNALS ARE, IN GENERAL, COMBINED INTO SINGLE SIGNALS WITHIN EACH DMC CHANNEL BY THE SIGNAL VALIDATION ALGORITHMS. IN THE CASE OF FLOW RATES IN PARALLEL FLOW PATHS (SUCH AS INDIVIDUAL STEAM LINE FLOWS), THIS INVOLVES SUMMING THE FLOWS TO OBTAIN TOTAL FLOW. IN THE CASE OF REDUNDANT TRANSMITTER SIGNALS (SUCH AS REACTOR WATER LEVEL), THIS INVOLVES DETERMINATION OF A SINGLE VALID VALUE FOR THE PARAMETER. IN THIS DOCUMENT, THE COMBINED SINGLE VALIDATED SIGNAL IS SHOWN IN GENERAL. ONE EXCEPTION IS THE REACTOR WATER LEVEL SIGNALS USED FOR ATWS MITIGATION LEVEL 3 SIGNAL ISSUED TO THE RFCS SYSTEM (RPT). IN THIS CASE, ALL THREE LEVEL TRIP SIGNALS MUST BE SENT TO RFCS, AND RFCS COMBINES THE TRIP SIGNALS FOR THE ATWS RPT LOGIC. THEREFORE, ALL THREE LEVEL TRANSMITTER SIGNALS ARE SHOWN IN THE LOGIC DEPICTION.
3. THE TOUCH SCREEN BUTTON (TSB) SENDS A HIGH SIGNAL FOR AT LEAST ONE COMPLETE SAMPLING PERIOD.
4. THE STATUS INDICATOR (W) IS DISPLAYED ON FDWC DEDICATED SOFTWARE FACED DISPLAY.
5. LOGIC FOR ONE CHANNEL, TYPICAL OF ALL THREE CHANNELS, IS SHOWN FOR REFERENCE PURPOSES ONLY, ANNUNCIATORS AND COMPUTER POINT SYMBOLS ARE SHOWN HERE. THESE OUTPUTS ARE ACTUALLY IMPLEMENTED BY VOTERS AS SHOWN IN REFERENCE C31–1010.
6. DELETED
7. TRIP FUNCTION SHOWN WITHIN DASH LINES ARE PERFORMED BY INDEPENDENT MICROPROCESSOR NUMBER 2. ALL OTHER FUNCTIONS ARE PERFORMED BY MICROPROCESSOR NUMBER 1.
8. LOGIC FOR ATWS FEEDWATER RUNBACK SHOWN WITHIN DASHED LINES IS PERFORMED BY SAFTY SYSTEM LOGIC AND CONTROL (SSLC). LOGIC IS FOR SSLC DIV I AND TYPICAL FOR DIVISIONS II, III AND IV.

TABLE OF CONTENTS

SH	TITLE
1	NOTES,REFERENCE DOCUMENTS
2	FEEDWATER CONTROL SYSTEM INTERLOCKS
3	FEEDWATER CONTROL SYSTEM INTERLOCKS, MODE SELECTION LOGIC
4	RFP A INTERLOCKS AND CONTROLLER INTIALIZATION
5	RFP B INTERLOCKS AND CONTROLLER INTIALIZATION
6	RFP C INTERLOCKS AND CONTROLLER INTIALIZATION
6a	RFP D INTERLOCKS AND CONTROLLER INTIALIZATION
7	RFP A MANUAL/AUTO STATION LOGIC
8	RFP B MANUAL/AUTO STATION LOGIC
9	RFP C MANUAL/AUTO STATION LOGIC
9a	RFP D MANUAL/AUTO STATION LOGIC
10	LFCV MANUAL/AUTO STATION LOGIC
11	DUMP VALVE FLOW CONTROL MANUAL/AUTO STATION LOGIC
12	CUW DUMP VALVE LEVEL CONTROL MANUAL/AUTO STATION SETPOINT CHANGE LOGIC
13	GAIN CHANGE LOGIC
14	ACTUATOR LOCKUP LOGIC, LOCKUP RINGBACK LOGIC, DMC CONTROLLER FAILURE
14	LOSS OF FEEDWATER HEATING LOGIC

SUPPLEMENTAL DOCUMENTS UNDER THE FOLLOWING IDENTITIES ARE TO BE USED IN CONJUNCTION WITH THIS DRAWING.

		REFERENCE DESIGNATOR
1.	FEEDWATER CONTROL SYSTEM, IED	C31–1010
2.	RECIRCULATION FLOW CONTROL SYSTEM, IED	C81–1010
3.	CONDENSATE, FEEDWATER & CONDENSATE AIR EXTRACTION SYSTEM, P&ID	N21–1010
4.	CONDENSATE, FEEDWATER & CONDENSATE AIR EXTRACTION SYSTEM, IBD	N21–1030
5.	REACTOR WATER CLEANUP SYSTEM, P&ID	G31–1010
6.	REACTOR WATER CLEANUP SYSTEM, IBD	G31–1030
7.	NUCLEAR BOILER SYSTEM, P&ID	B21–1010
8.	NUCLEAR BOILER SYSTEM, IBD	B21–1030
9.	PLANT COMPUTER FUNCTIONS, IED	C91–1010
10.	RECIRCULATION FLOW CONTROL SYSTEM, IBD	C81–1030
11.	MAIN CONTROL ROOM PANEL, ARGMT	H11–4050
12.	TURBINE CONTROL SYSTEM, IED	N32–1010
13.	TURBINE CONTROL SYSTEM, IBD	N32–1030
14.	NEUTRON MONITORING SYSTEM, IED	C51–1010

MPL NO C31–1030

Figure 7.7-9 – Feedwater Control System IBD (Sheet 1 of 14)

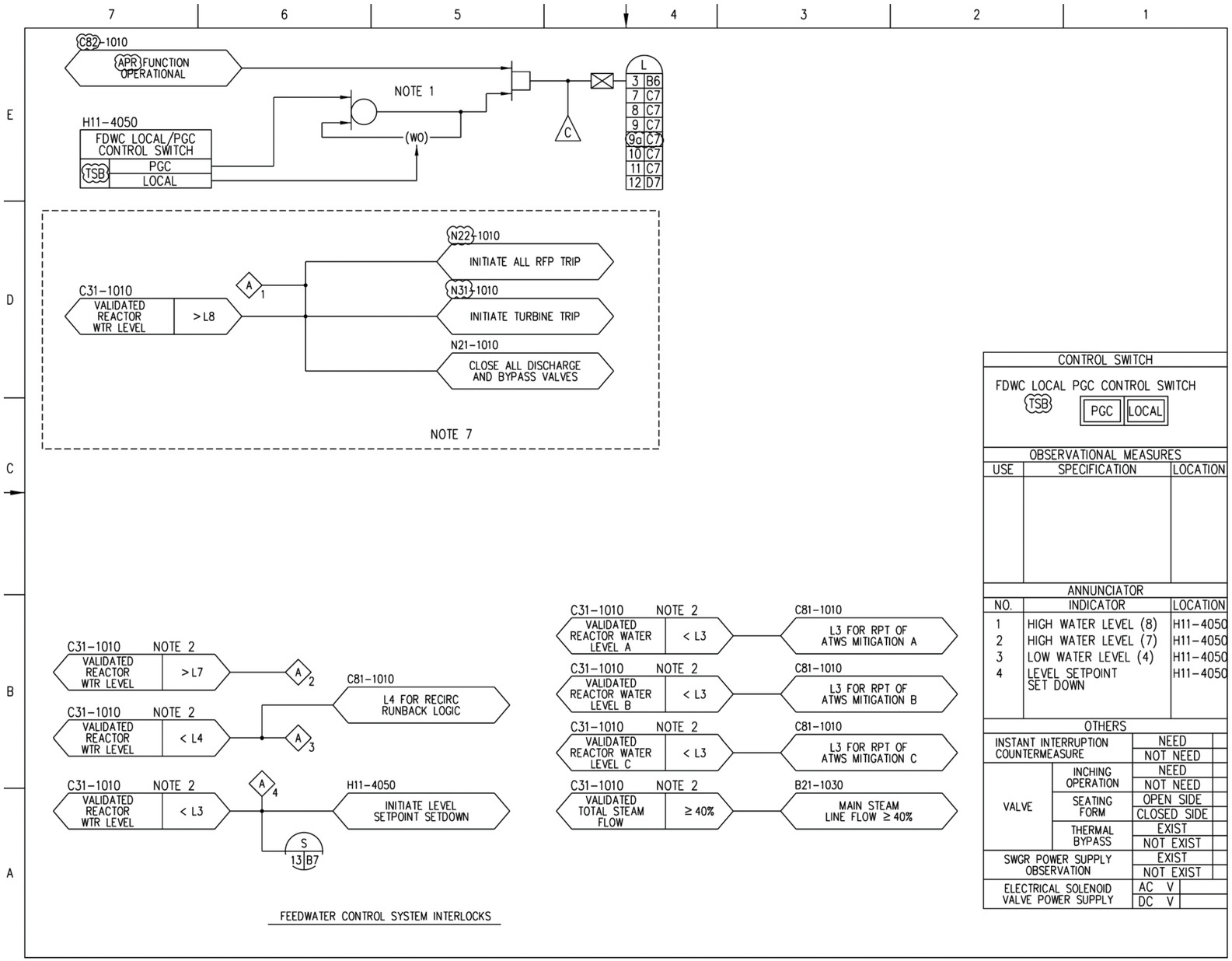

Figure 7.7-9 – Feedwater Control System IBD (Sheet 2 of 14)

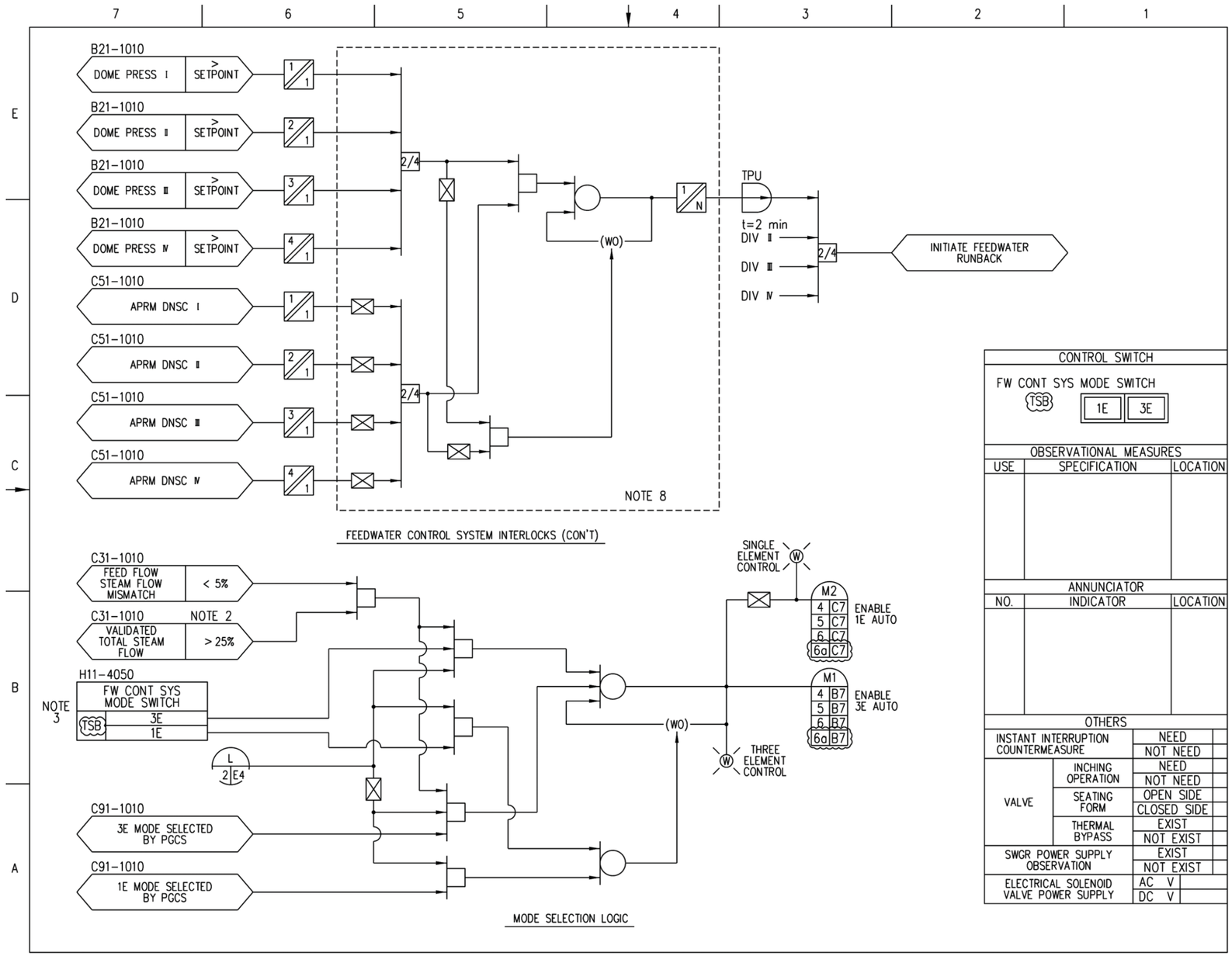

Figure 7.7-9 – Feedwater Control System IBD (Sheet 3 of 14)

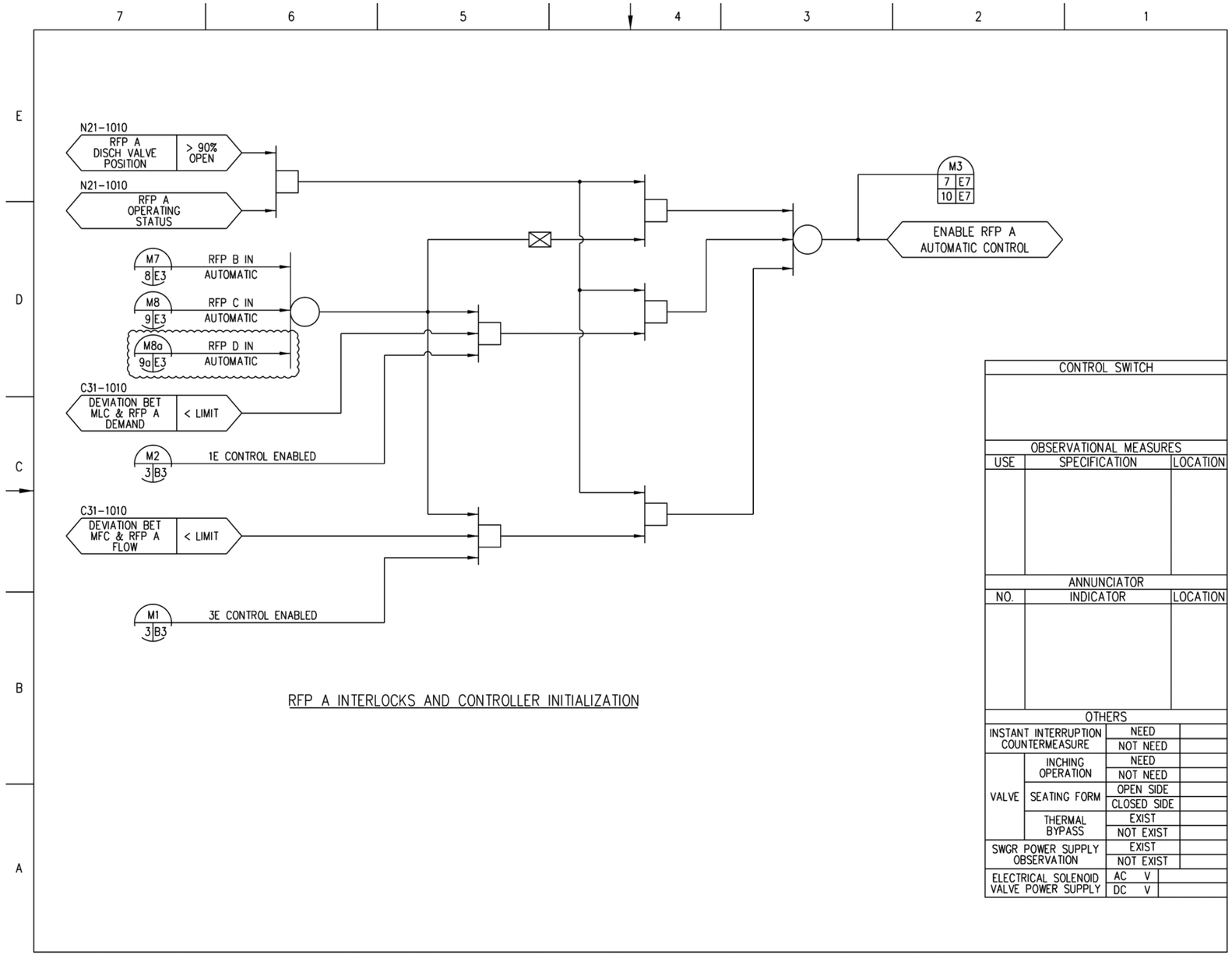

Figure 7.7-9 – Feedwater Control System IBD (Sheet 4 of 14)

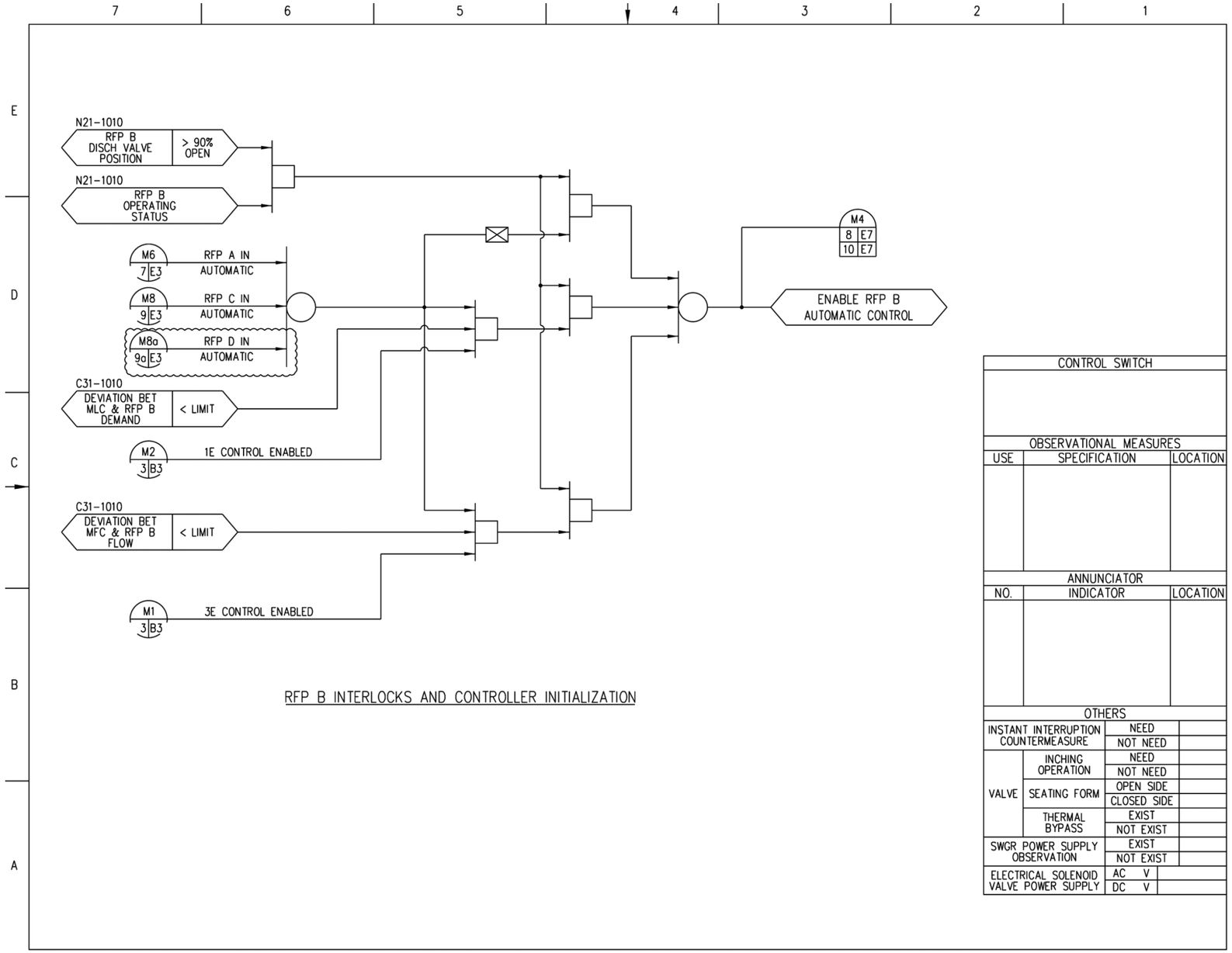

Figure 7.7-9 – Feedwater Control System IBD (Sheet 5 of 14)

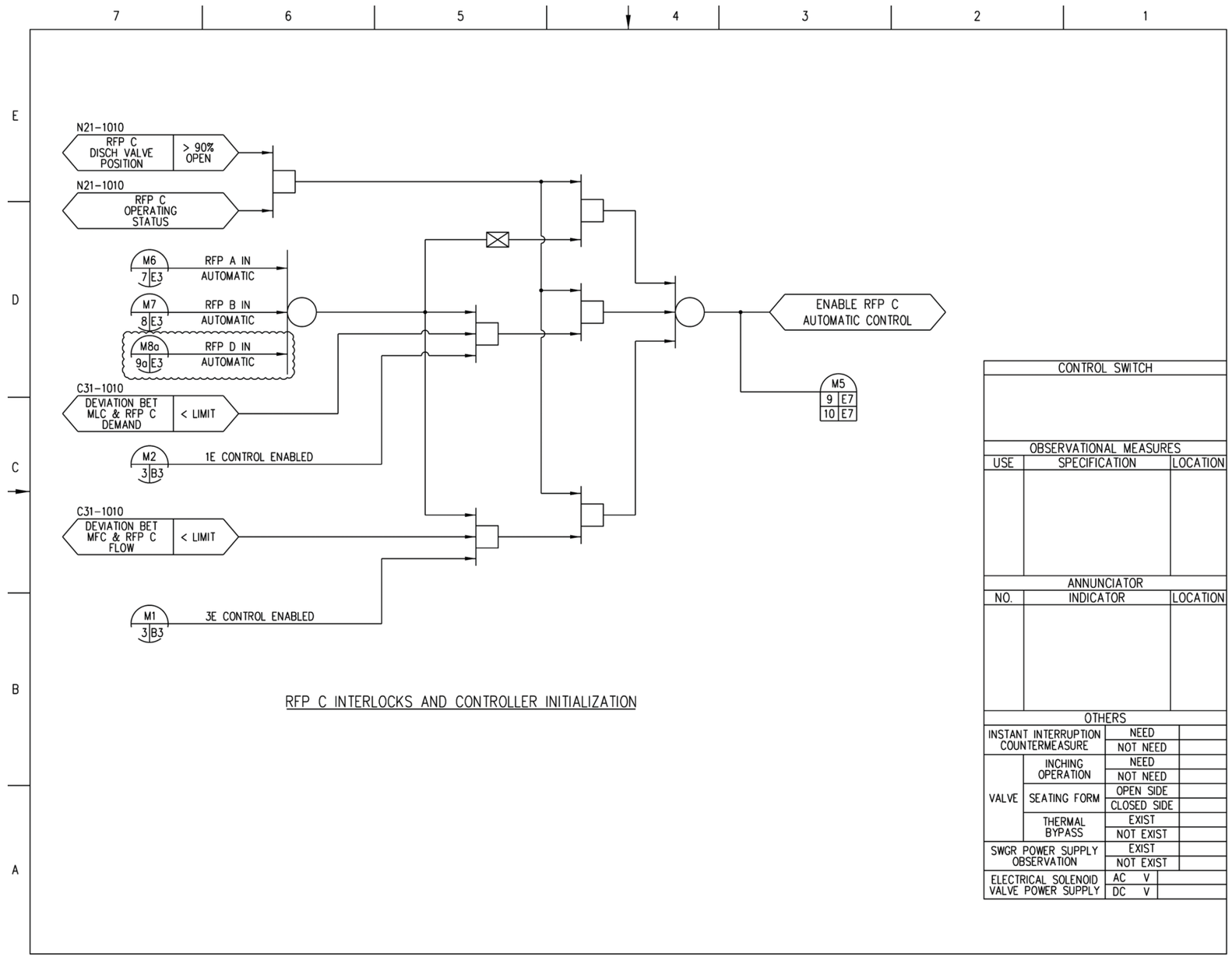

Figure 7.7-9 – Feedwater Control System IBD (Sheet 6 of 14)

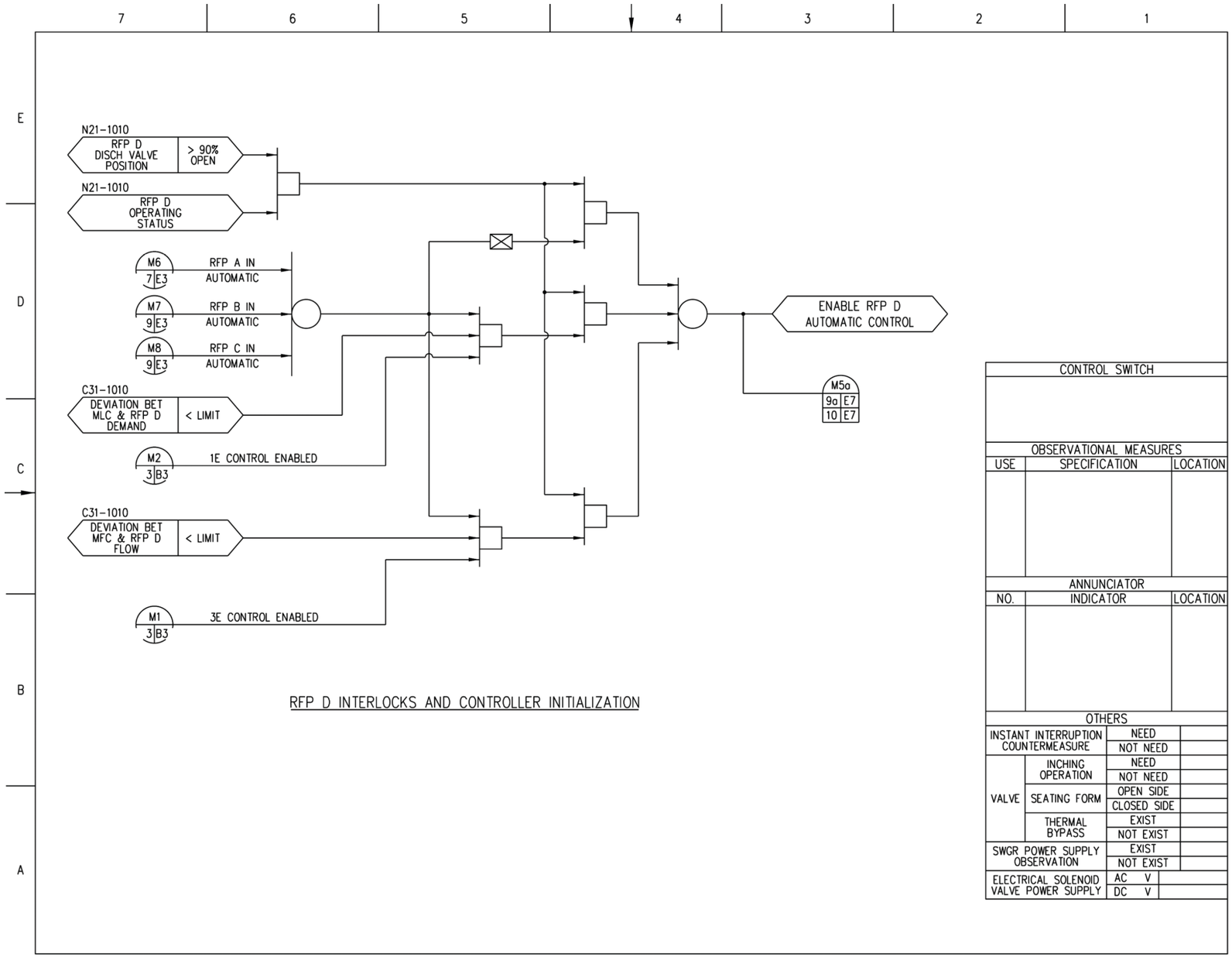

Figure 7.7-9 – Feedwater Control System IBD (Sheet 6a of 14)

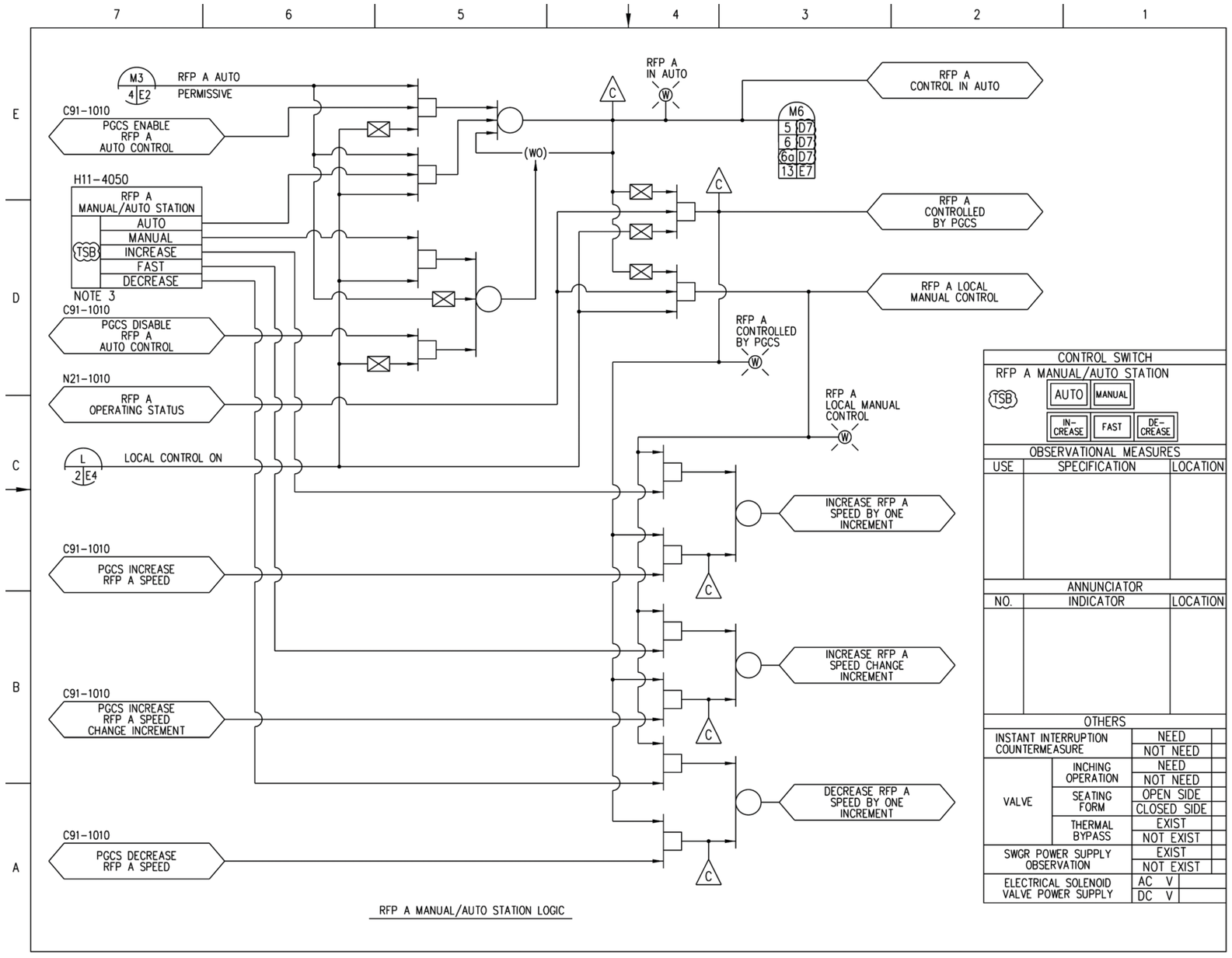

Figure 7.7-9 – Feedwater Control System IBD (Sheet 7 of 14)

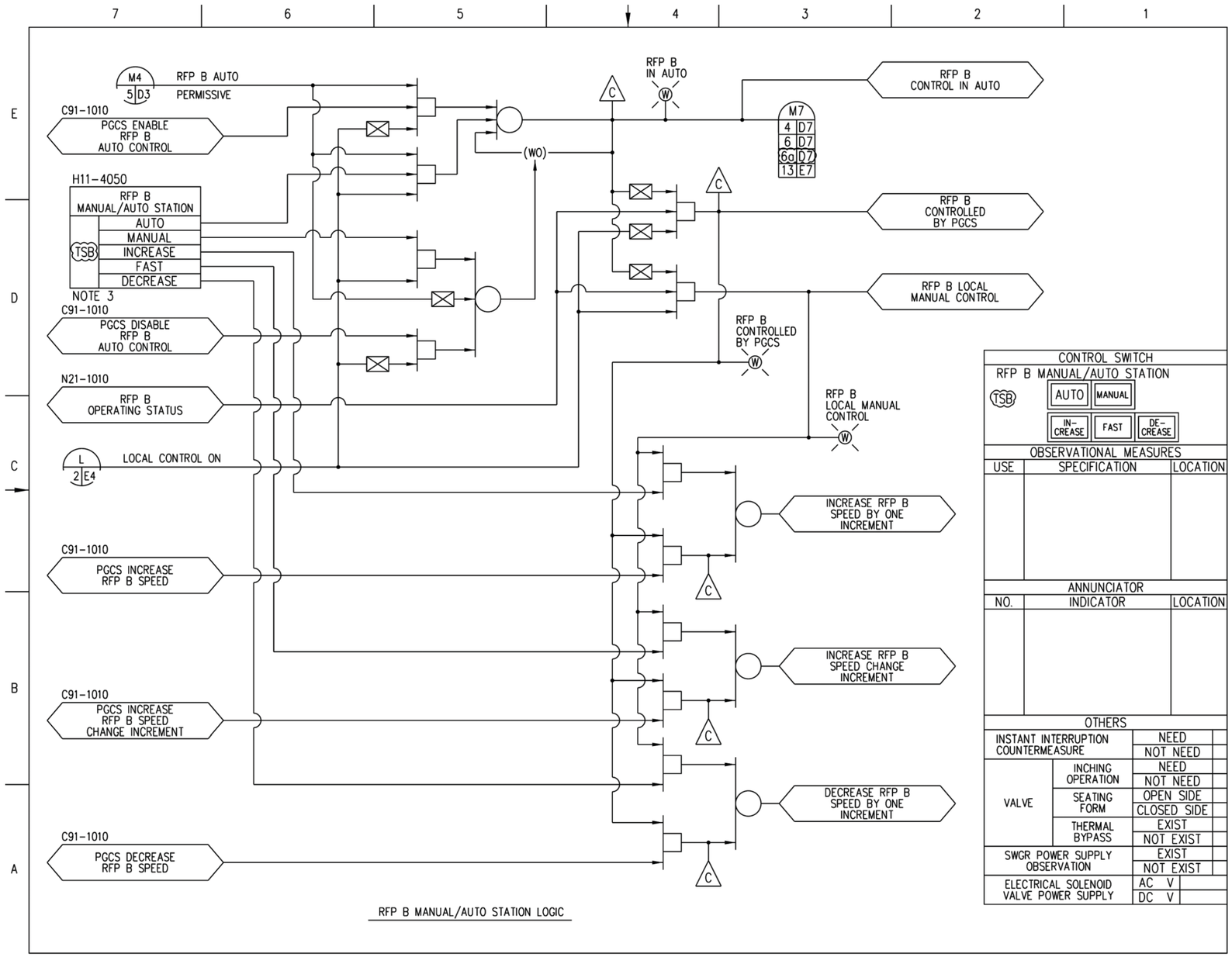

Figure 7.7-9 – Feedwater Control System IBD (Sheet 8 of 14)

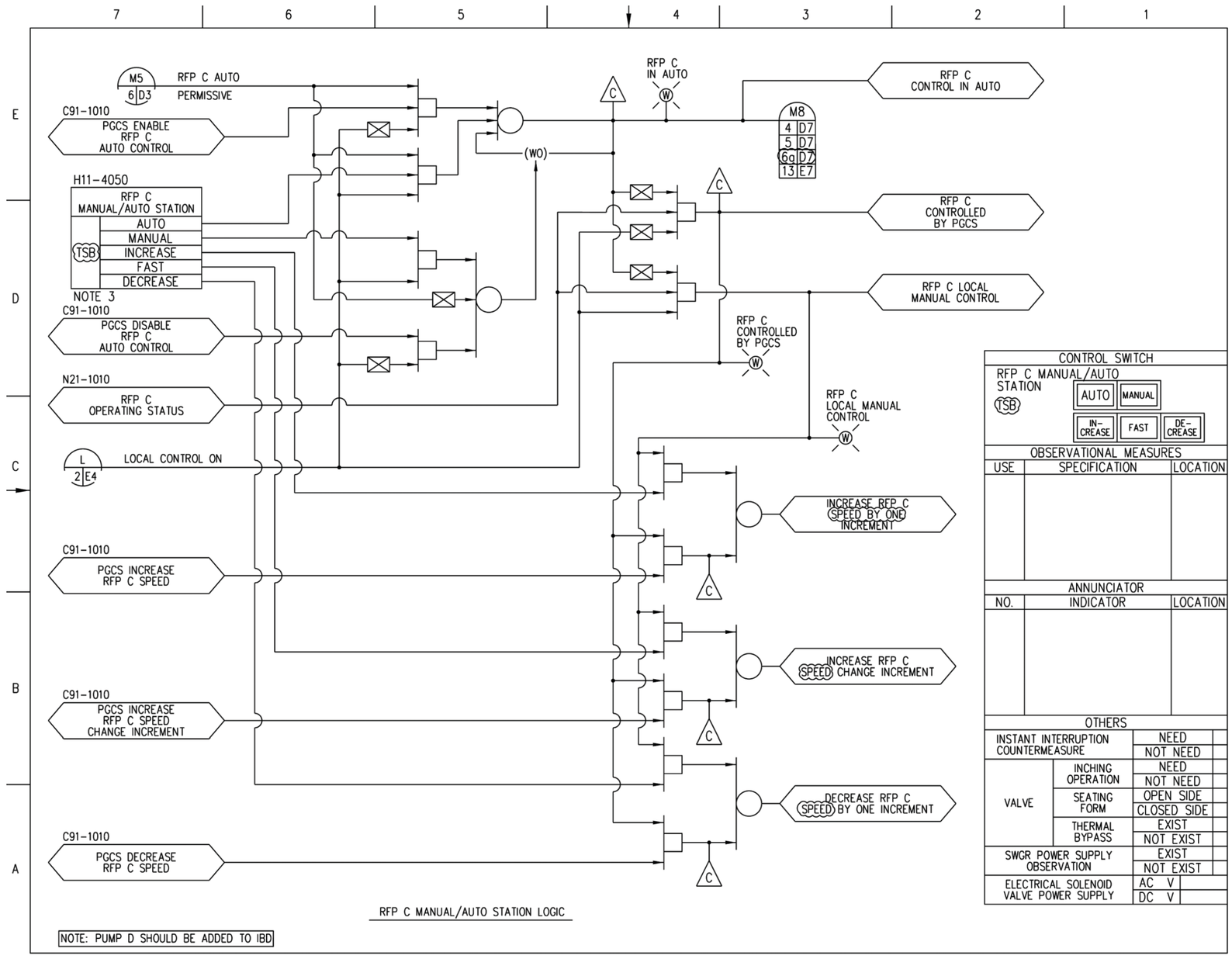

Figure 7.7-9 – Feedwater Control System IBD (Sheet 9 of 14)

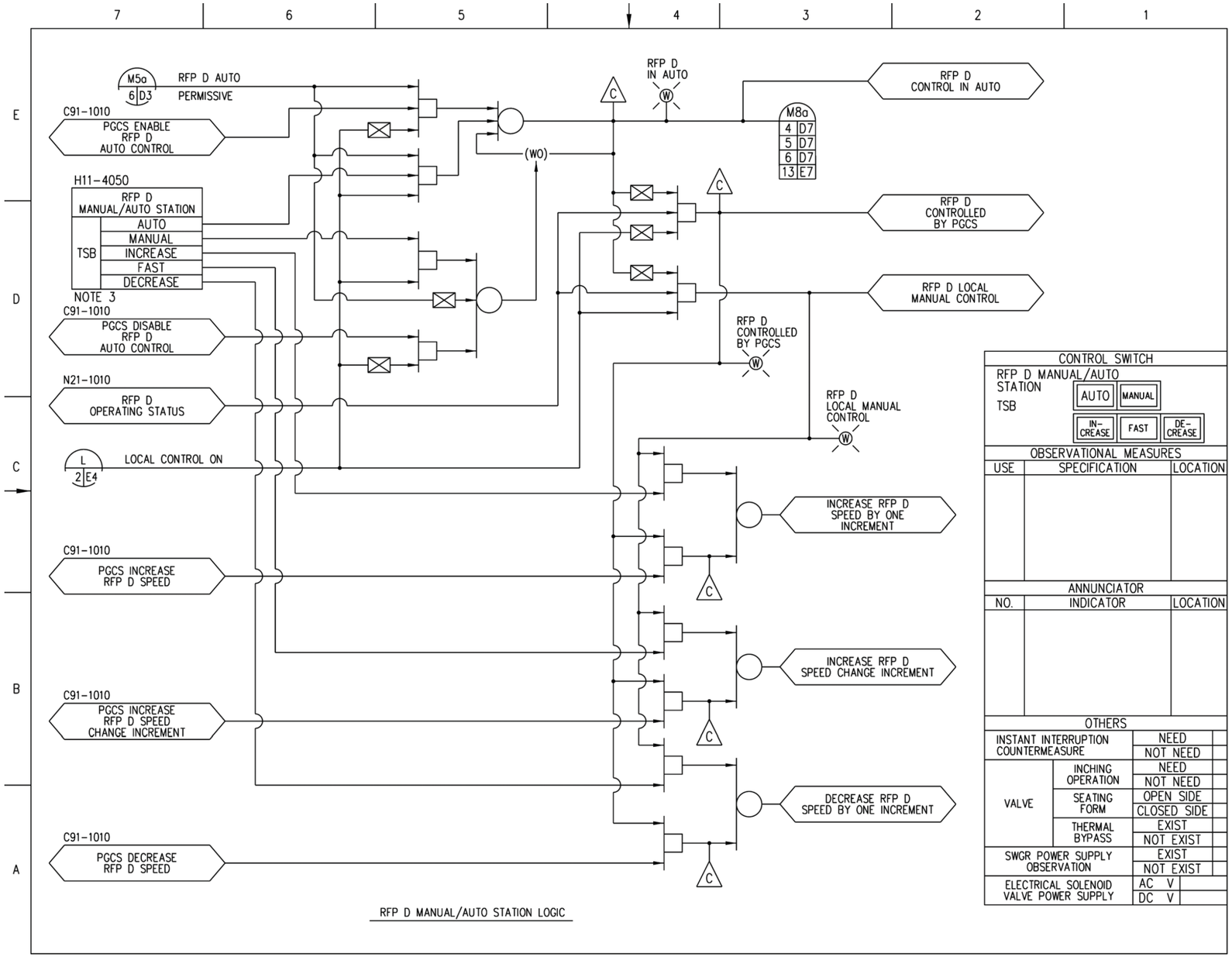

Figure 7.7-9 – Feedwater Control System IBD (Sheet 9a of 14)

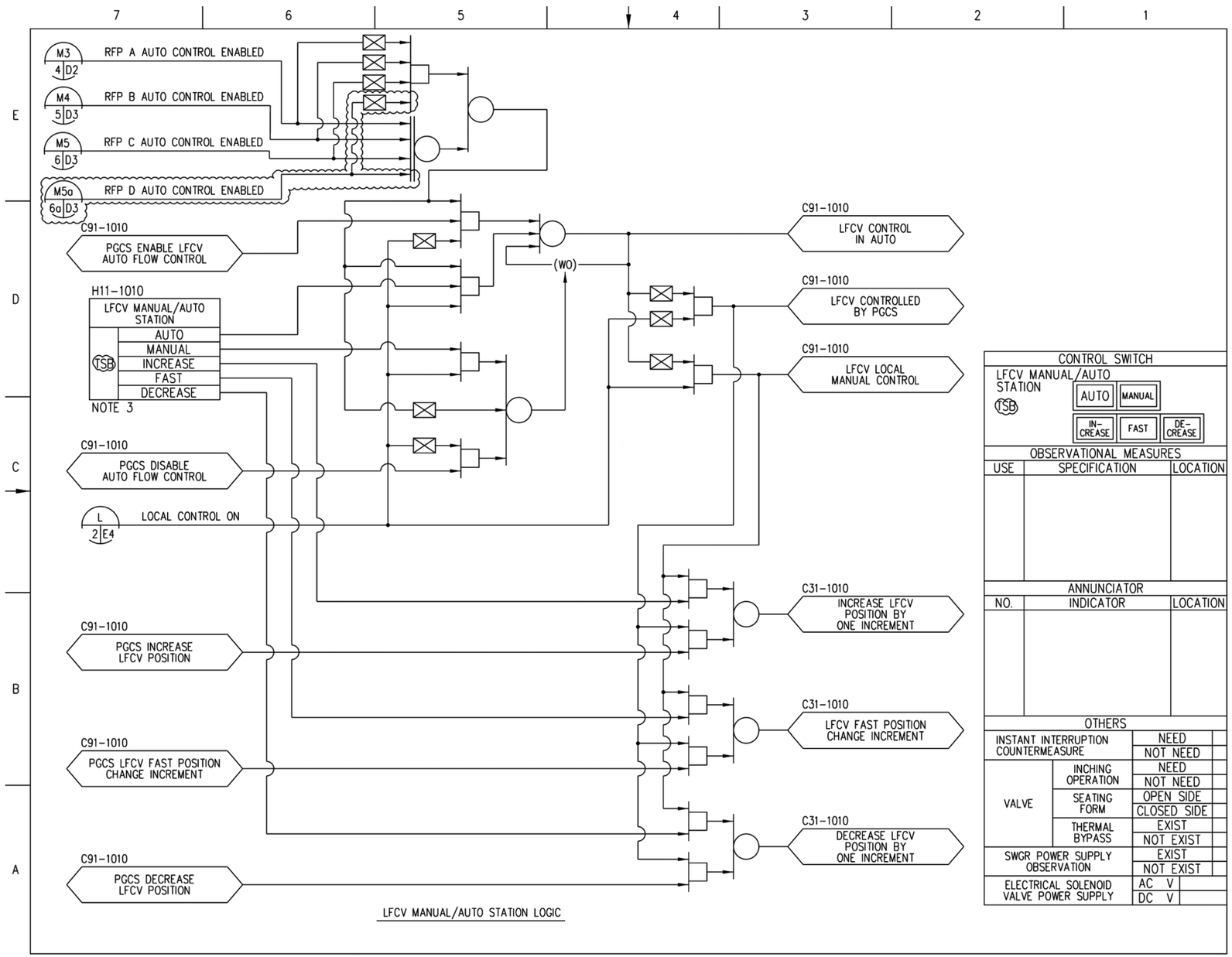

Figure 7.7-9 – Feedwater Control System IBD (Sheet 10 of 14)

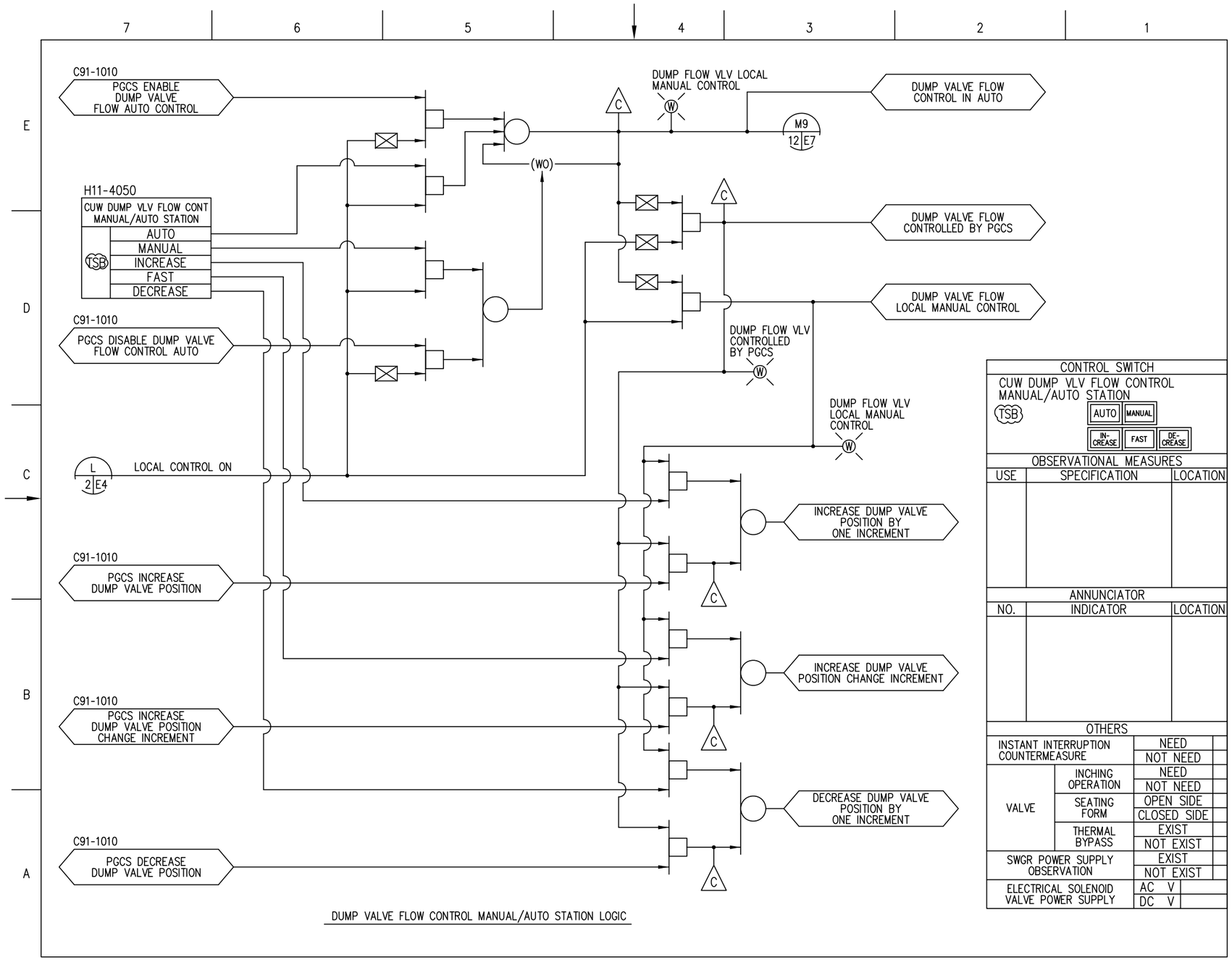

7.7-9 – Feedwater Control System IBD (Sheet 11 of 14)

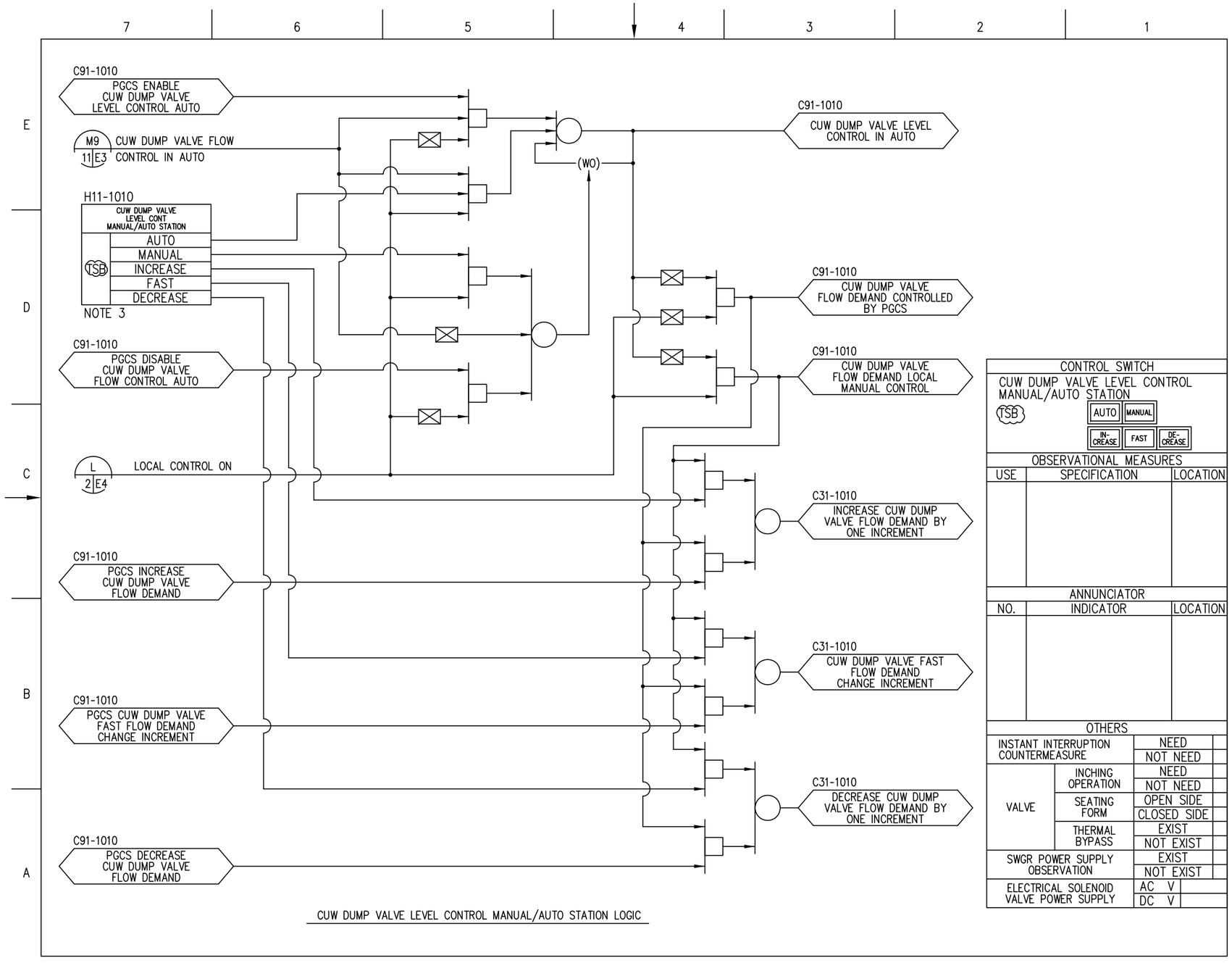

7.7-9 – Feedwater Control System IBD (Sheet 12 of 14)

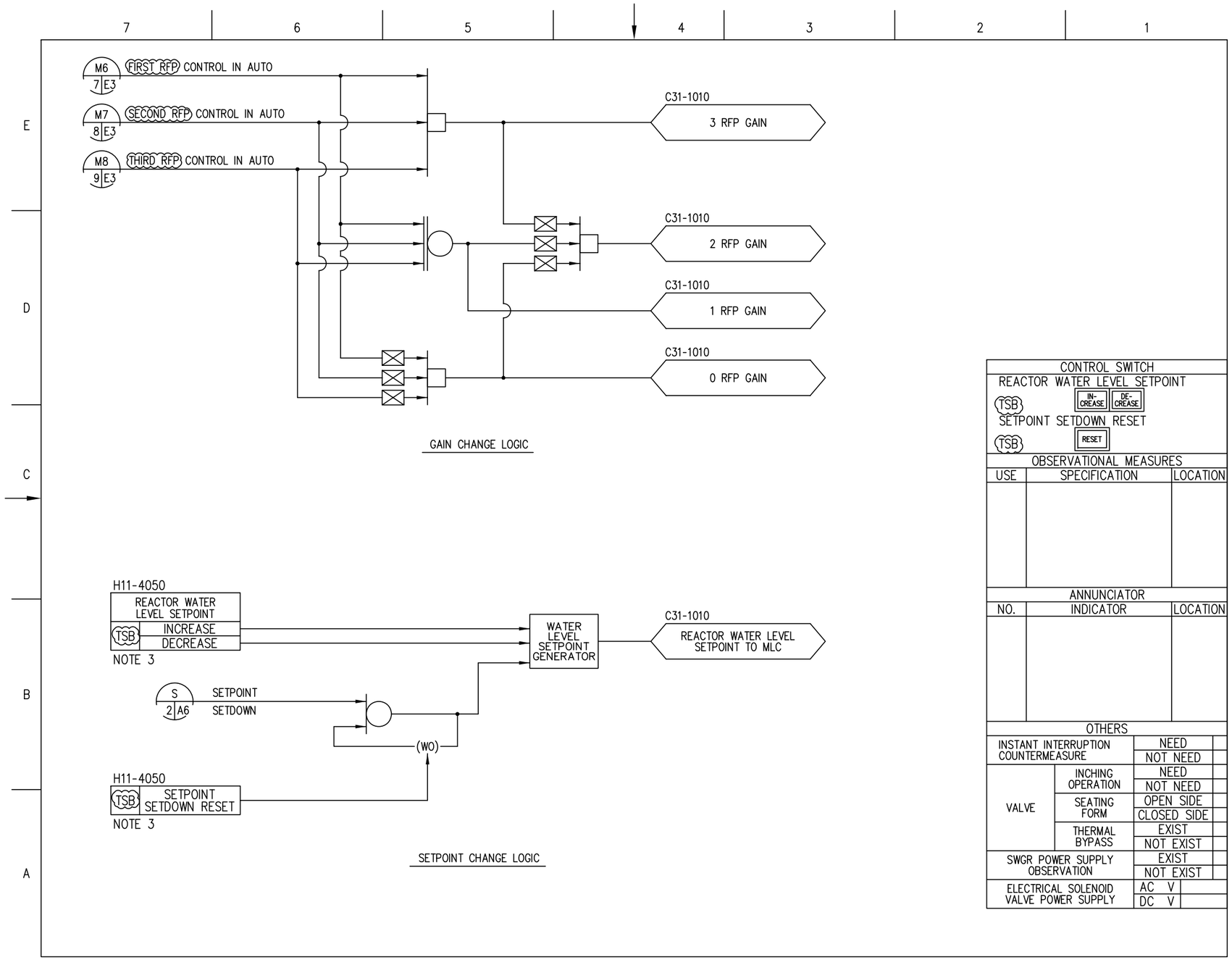

7.7-9 – Feedwater Control System IBD (Sheet 13 of 14)

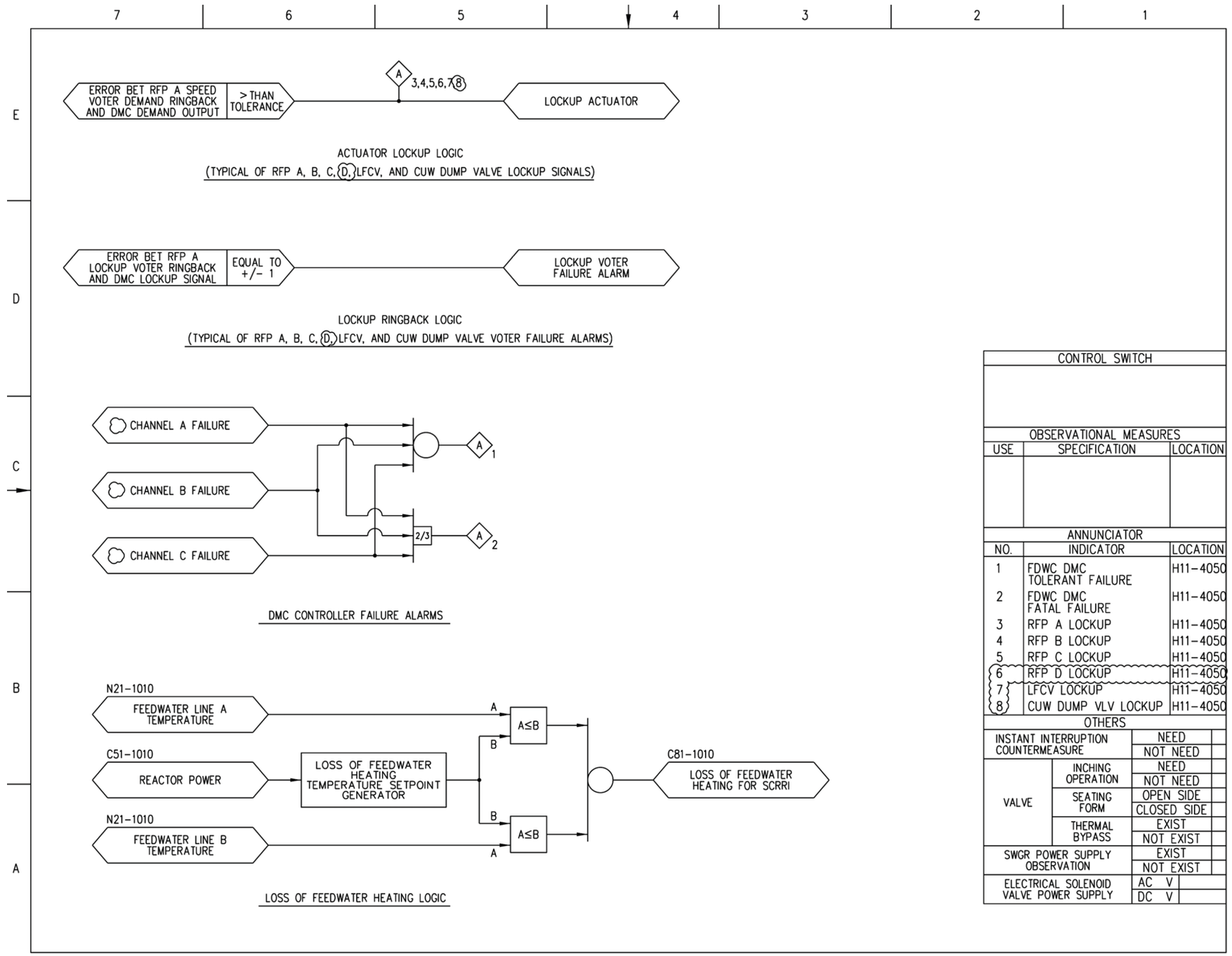

Figure 7.7-9 – Feedwater Control System IBD (Sheet 14 of 14)