PROPRIETARY INFORMATION

Figure 1.2-30 – Turbine Building, General Arrangement at Elevation 38300 mm

Figure 1.2-31 – Turbine Building, General Arrangement at Elevation 47200 mm

PROPRIETARY INFORMATION

Figure 1.2-32 – Turbine Building, General Arrangement at Section A-A

Figure 1.2-33 – Turbine Building, General Arrangement at Section B-B

PROPRIETARY INFORMATION

Figure 1.2-34 – UHS Tower Plans

PROPRIETARY INFORMATION

Figure 1.2-35 – UHS Tower Sections

[redacted]

PROPRIETARY INFORMATION

Figure 1.2-36 – RSW Pumphouse and Tunnel Plans and Sections

Figure 1.2-37 – Plot Plan

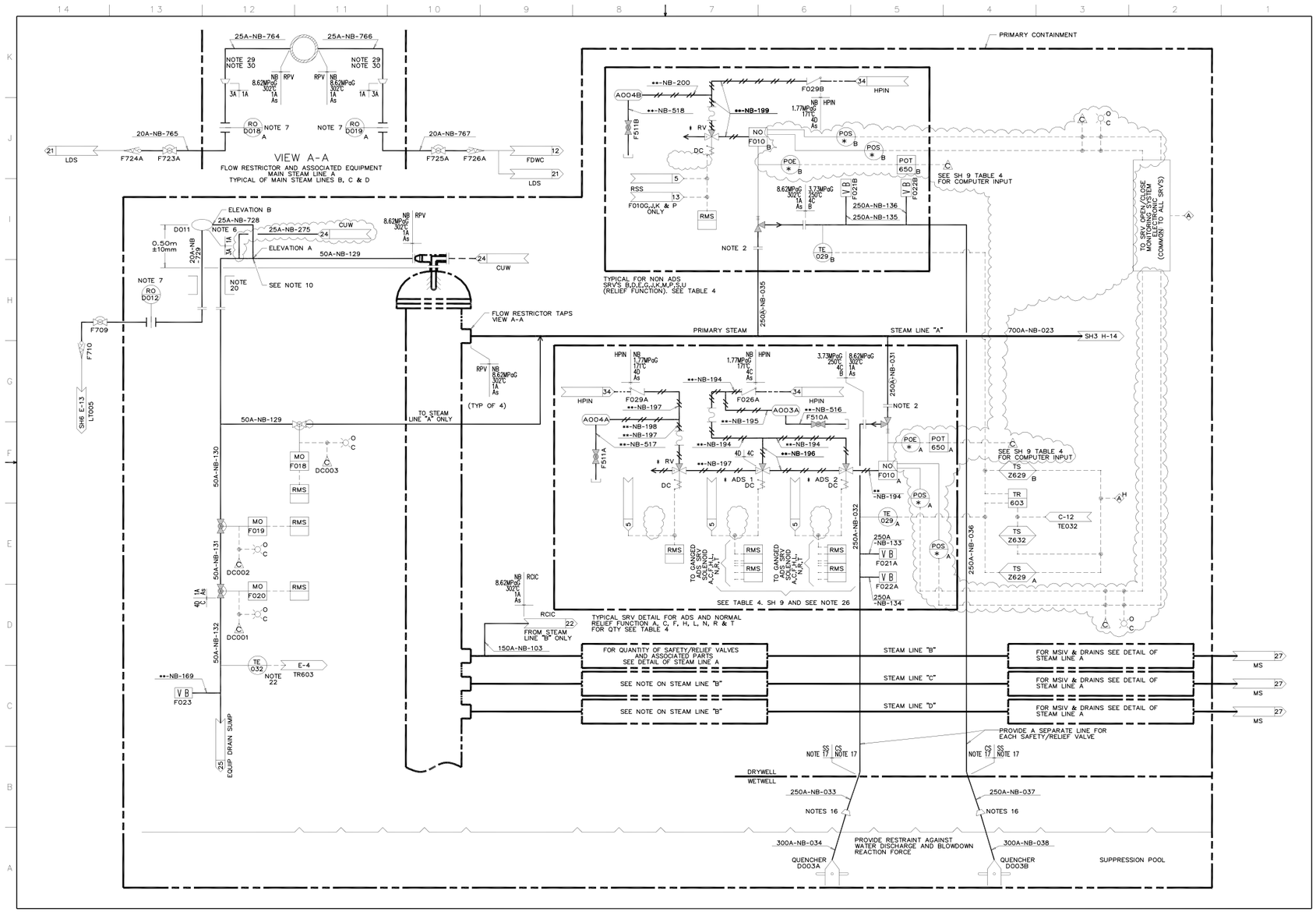

Figure 5.1-3 – Nuclear Boiler System P&ID (Sheet 2 of 11)

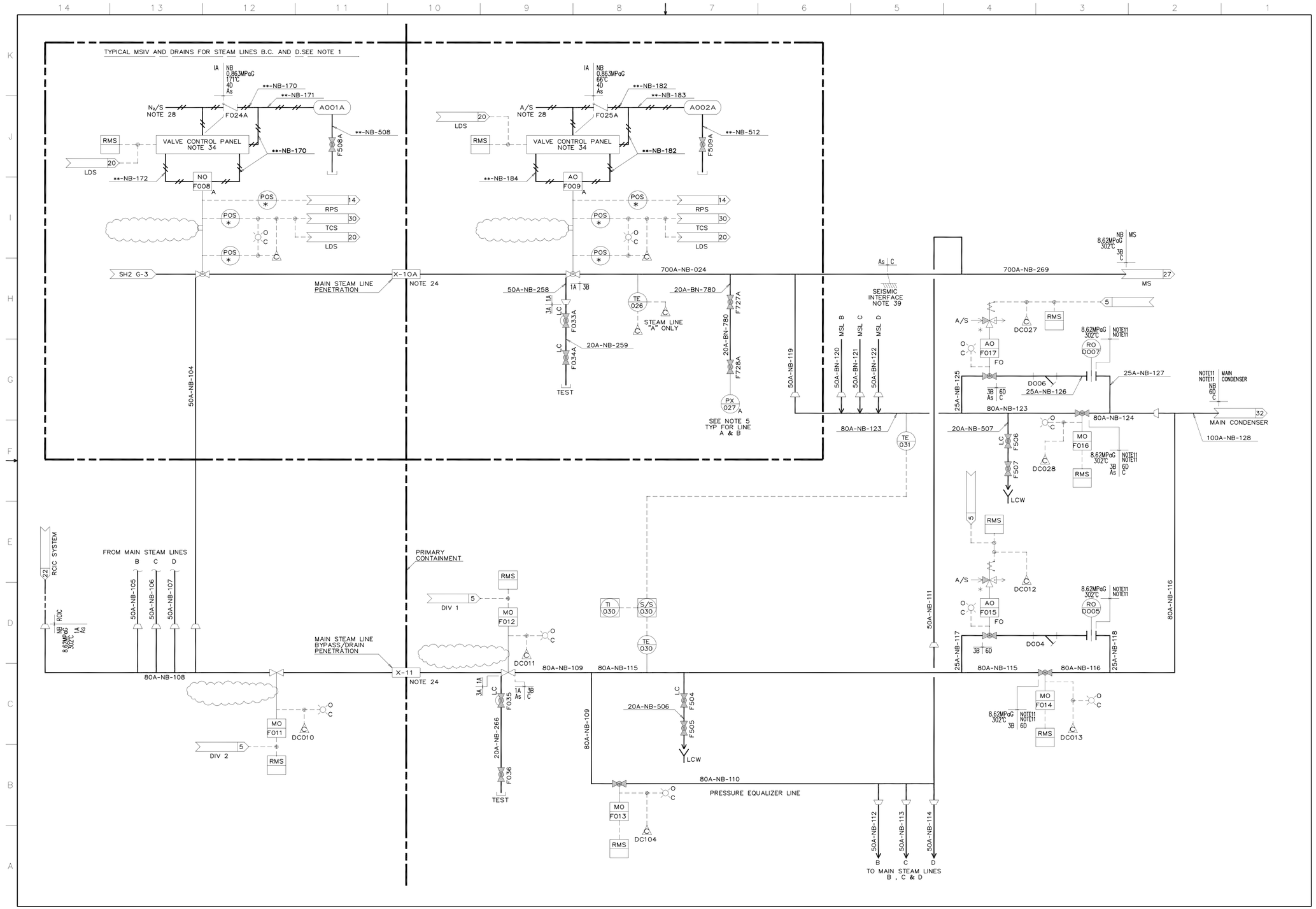

Figure 5.1-3 – Nuclear Boiler System P&ID (Sheet 3 of 11)

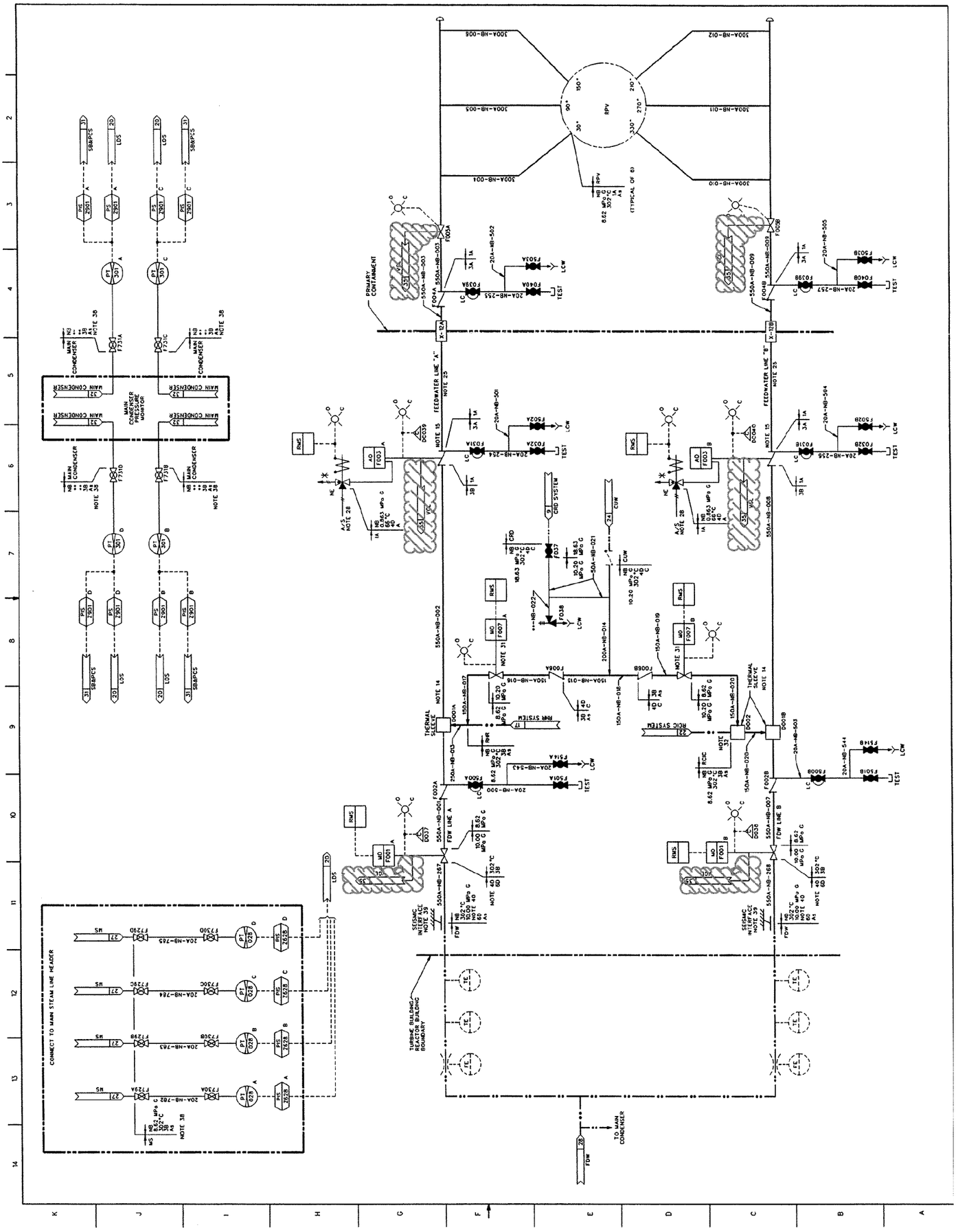

Figure 5.1-3 – Nuclear Boiler System P&ID (Sheet 4 of 11)

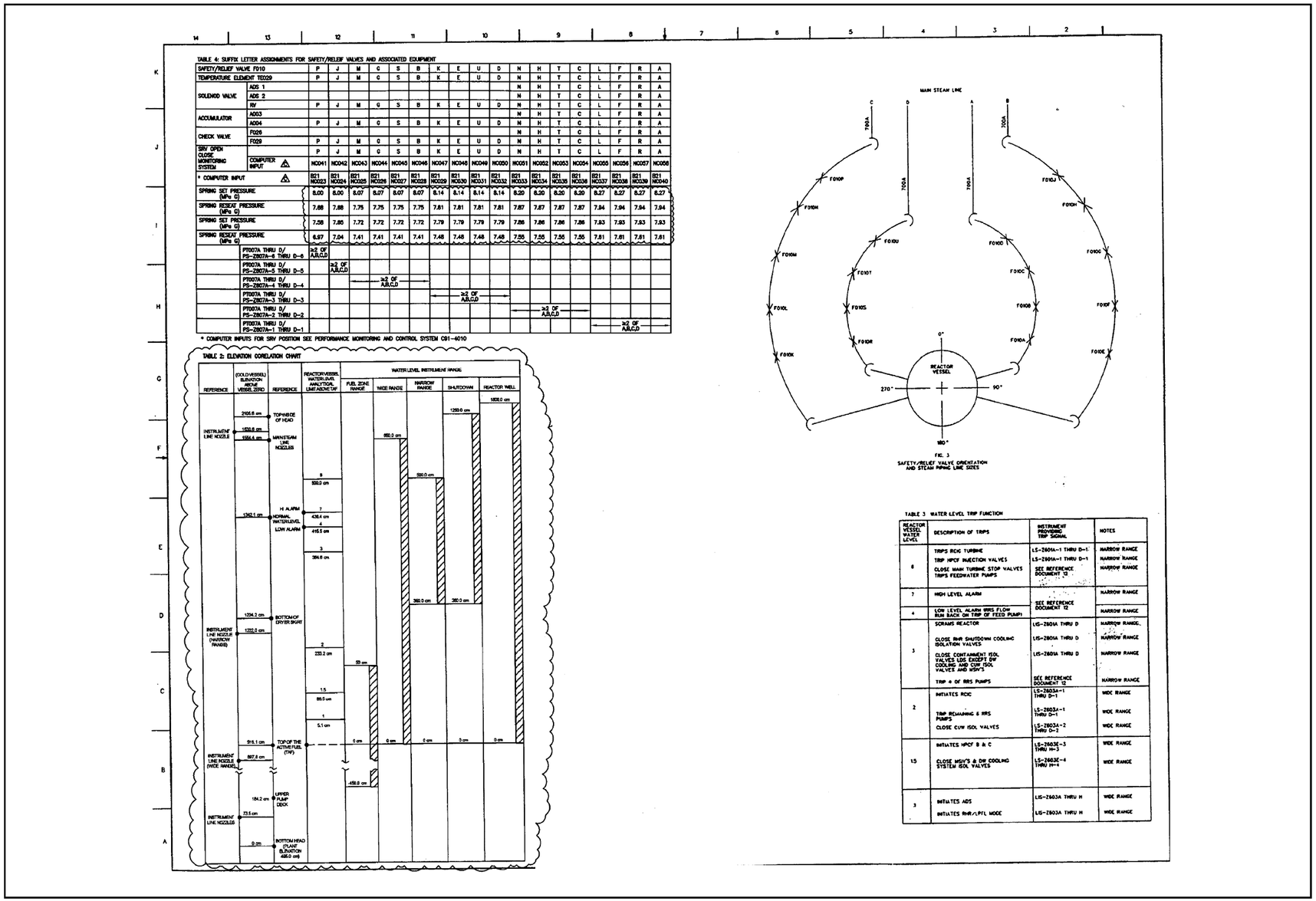

Figure 5.1-3 – Nuclear Boiler System P&ID (Sheet 9 of 11)

TABLE 5: PIPING SPECIFICATIONS

PIPE NO.	SCHEDULE	MATERIAL	FLUID
001	**	CS	W
002	**	CS	W
003	100	CS	W
004	100	CS	W
005	100	CS	W
006	100	CS	W
007	**	CS	W
008	**	CS	W
009	100	CS	W
010	100	CS	W
011	100	CS	W
012	100	CS	W
013	**	CS	W
014	**	CS	W
015	**	CS	W
016	**	CS	W
017	**	CS	W
018	**	CS	W
019	**	CS	W
020	**	CS	W
021	**	CS	W
022	**	CS	W
023	80	CS	S
024	**	CS	S
025	80	CS	S
026	**	CS	S
027	80	CS	S
028	**	CS	S
029	80	CS	S
030	**	CS	S
031	N/A	CS	S
032	80	CS	S
033	60	SS	S
034	60	SS	S
035	N/A	CS	S
036	80	CS	S
037	60	SS	S
038	60	SS	S
039	N/A	CS	S
040	80	CS	S
041	60	SS	S
042	60	SS	S
043	N/A	CS	S
044	80	CS	S
045	60	SS	S
046	60	SS	S
047	N/A	CS	S
048	80	CS	S
049	60	SS	S
050	60	SS	S
051	N/A	CS	S
052	80	CS	S
053	60	SS	S
054	60	SS	S
055	N/A	CS	S
056	80	CS	S
057	60	SS	S
058	60	SS	S
059	N/A	CS	S
060	80	CS	S
061	60	SS	S
062	60	SS	S
063	N/A	CS	S
064	80	CS	S
065	60	SS	S
066	60	SS	S
067	N/A	CS	S
068	80	CS	S
069	60	SS	S
070	60	SS	S
071	N/A	CS	S
072	80	CS	S
073	60	SS	S
074	60	SS	S
075	N/A	CS	S
076	80	CS	S
077	60	SS	S
078	60	SS	S
079	N/A	CS	S
080	80	CS	S

TABLE 5: PIPING SPECIFICATIONS (CONT'D)

PIPE NO.	SCHEDULE	MATERIAL	FLUID
081	60	SS	S
082	60	SS	S
083	N/A	CS	S
084	80	CS	S
085	60	SS	S
086	60	SS	S
087	N/A	CS	S
088	80	CS	S
089	60	SS	S
090	60	SS	S
091	N/A	CS	S
092	80	CS	S
093	60	SS	S
094	60	SS	S
095	N/A	CS	S
096	80	CS	S
097	60	SS	S
098	60	SS	S
099	N/A	CS	S
100	80	CS	S
101	60	SS	S
102	60	SS	S
103	120	CS	S
104	160	CS	S
105	160	CS	S
106	160	CS	S
107	160	CS	S
108	160	CS	S
109	**	CS	S
110	**	CS	S
111	**	CS	S
112	**	CS	S
113	**	CS	S
114	**	CS	S
115	**	CS	S
116	**	CS	S
117	**	CS	S
118	**	CS	S
119	**	CS	S
120	**	CS	S
121	**	CS	S
122	**	CS	S
123	**	CS	S
124	**	CS	S
125	**	CS	S
126	**	CS	S
127	**	CS	S
128	**	CS	S
129	80	CS	S
130	80	CS	S
131	80	CS	S
132	**	CS	S
133	80	CS	S
134	80	CS	S
135	80	CS	S
136	80	CS	S
137	80	CS	S
138	80	CS	S
139	80	CS	S
140	80	CS	S
141	80	CS	S
142	80	CS	S
143	80	CS	S
144	80	CS	S
145	80	CS	S
146	80	CS	S
147	80	CS	S
148	80	CS	S
149	80	CS	S
150	80	CS	S
151	80	CS	S
152	80	CS	S
153	80	CS	S
154	80	CS	S
155	80	CS	S
156	80	CS	S
157	80	CS	S
158	80	CS	S
159	80	CS	S
160	80	CS	S

TABLE 5: PIPING SPECIFICATIONS (CONT'D)

PIPE NO.	SCHEDULE	MATERIAL	FLUID
161	80	CS	S
162	80	CS	S
163	80	CS	S
164	80	CS	S
165	80	CS	S
166	80	CS	S
167	80	CS	S
168	80	CS	S
169	**	CS	S
170	**	SS	N
171	**	SS	N
172	**	SS	N
173	**	SS	N
174	**	SS	N
175	**	SS	N
176	**	SS	N
177	**	SS	N
178	**	SS	N
179	**	SS	N
180	**	SS	N
181	**	SS	N
182	**	SS	A
183	**	SS	A
184	**	SS	A
185	**	SS	A
186	**	SS	A
187	**	SS	A
188	**	SS	A
189	**	SS	A
190	**	SS	A
191	**	SS	A
192	**	SS	A
193	**	SS	A
194	**	SS	N
195	**	SS	N
196	**	SS	N
197	**	SS	N
198	**	SS	N
199	**	SS	N
200	**	SS	N
201	**	SS	N
202	**	SS	N
203	**	SS	N
204	**	SS	N
205	**	SS	N
206	**	SS	N
207	**	SS	N
208	**	SS	N
209	**	SS	N
210	**	SS	N
211	**	SS	N
212	**	SS	N
213	**	SS	N
214	**	SS	N
215	**	SS	N
216	**	SS	N
217	**	SS	N
218	**	SS	N
219	**	SS	N
220	**	SS	N
221	**	SS	N
222	**	SS	N
223	**	SS	N
224	**	SS	N
225	**	SS	N
226	**	SS	N
227	**	SS	N
228	**	SS	N
229	**	SS	N
230	**	SS	N
231	**	SS	N
232	**	SS	N
233	**	SS	N
234	**	SS	N
235	**	SS	N
236	**	SS	N
237	**	SS	N
238	**	SS	N
239	**	SS	N
240	**	SS	N

TABLE 5: PIPING SPECIFICATIONS (CONT'D)

PIPE NO.	SCHEDULE	MATERIAL	FLUID
241	**	SS	N
242	**	SS	N
243	**	SS	N
244	**	SS	N
245	**	SS	N
246	**	SS	N
247	**	SS	N
248	**	SS	N
249	**	SS	N
250	**	SS	N
251	**	SS	N
252	**	SS	N
253	**	SS	N
254	160	CS	W
255	160	CS	W
256	160	CS	W
257	160	CS	W
258	160	CS	S
259	160	CS	S
260	160	CS	S
261	160	CS	S
262	160	CS	S
263	160	CS	S
264	160	CS	S
265	160	CS	S
266	**	CS	S
267	**	CS	W
268	**	CS	W
269	**	CS	S
270	**	CS	S
271	**	CS	S
272	**	CS	S
275	160	CS	S
500	**	CS	W
501	160	CS	W
502	160	CS	W
503	**	CS	W
504	160	CS	W
505	160	CS	W
506	**	CS	S
507	**	CS	S
508	**	SS	N
509	**	SS	A
510	**	SS	N
511	**	SS	A
512	**	SS	N
513	**	SS	A
514	**	SS	N
515	**	SS	A
516	**	SS	N
517	**	SS	N
518	**	SS	N
519	**	SS	N
520	**	SS	N
521	**	SS	N
522	**	SS	N
523	**	SS	N
524	**	SS	N
525	**	SS	N
526	**	SS	N
527	**	SS	N
528	**	SS	N
529	**	SS	N
530	**	SS	N
531	**	SS	N
532	**	SS	N
533	**	SS	N
534	**	SS	N
535	**	SS	N
536	**	SS	N
537	**	SS	N
538	**	SS	N
539	**	SS	N
540	**	SS	N
541	**	SS	N
542	**	CS	S
543	160	CS	W
544	160	CS	W

TABLE 5: PIPING SPECIFICATIONS (CONT'D)

PIPE NO.	SCHEDULE	MATERIAL	FLUID
700	80	SS	S
701	**	SS	W
702	**	SS	W
703	80	SS	S
704	**	SS	W
705	**	SS	W
706	80	SS	S
707	**	SS	W
708	**	SS	W
709	80	SS	S
710	**	SS	W
711	**	SS	W
712	80	SS	W
713	**	SS	W
714	80	SS	W
715	**	SS	W
716	80	SS	W
717	**	SS	W
718	80	SS	W
719	**	SS	W
720	80	SS	W
721	**	SS	W
722	80	SS	W
723	**	SS	W
724	80	SS	W
725	**	SS	W
726	80	SS	W
727	**	SS	W
728	**	CS	S
729	**	SS	W
730	**	SS	S
731	**	SS	S
732	80	SS	W
733	**	SS	W
734	80	SS	W
735	**	SS	W
736	80	SS	W
737	**	SS	W
738	80	SS	W
739	**	SS	W
740	80	SS	W
741	**	SS	W
742	80	SS	W
743	**	SS	W
744	80	SS	W
745	**	SS	W
746	80	SS	W
747	**	SS	W
748	80	SS	W
749	**	SS	W
750	80	SS	W
751	**	SS	W
752	80	SS	W
753	**	SS	W
754	80	SS	W
755	**	SS	W
756	80	SS	W
757	**	SS	W
758	80	SS	W
759	**	SS	W
760	80	SS	W
761	**	SS	W
762	80	SS	W
763	**	SS	W
764	**	SS	S
765	**	SS	W
766	**	SS	S
767	**	SS	W
768	**	SS	S
769	**	SS	W
770	**	SS	S
771	**	SS	W
772	**	SS	S
773	**	SS	W
774	**	SS	S
775	**	SS	W
776	**	SS	S
777	**	SS	W
778	**	SS	S
779	**	SS	W

TABLE 5: PIPING SPECIFICATIONS (CONT'D)

PIPE NO.	SCHEDULE	MATERIAL	FLUID
780	**	CS	S
781	**	CS	S
782	**	SS	S
783	**	SS	S
784	**	SS	S
785	**	SS	S

Figure 5.1-3 Nuclear Boiler System P&ID (Sheet 10 of 11)

NOTES:

1. ALL SIGNALS ARE TRANSMITTED AS SERIAL DATA TO EACH TLU OR SLU THROUGH EACH SERIAL OUTPUT.
2. FOUR TEMPERATURE ELEMENTS SHALL BE LOCATED AT APPROXIMATELY EQUAL INTERVALS IN THE VERTICAL DIRECTION SO AS TO MONITOR AMBIENT TEMPERATURES OVER THE FULL HEIGHT OF THE DRYWELL.
3. TEMPERATURE DETECTORS SHALL BE LOCATED OR SHIELDED SO THAT THE DETECTOR IS SENSITIVE TO THE AIR TEMPERATURE AND NOT THE RADIATED HEAT FROM HOT EQUIPMENT.
4. ALL INSTRUMENT LINES THAT CONNECT TO THE REACTOR COOLANT PRESSURE BOUNDARY AND PENETRATE THE CONTAINMENT WALL SHALL HAVE 6.35 MM RESTRICTING ORIFICES INSIDE THE CONTAINMENT. SEE SUPPORTING DOCUMENTS 2&3 FOR ADDITIONAL REQUIREMENTS.
5. EACH INSTRUMENT LINE THROUGH THE CONTAINMENT WALL SHALL HAVE TWO ISOLATION VALVES OUTSIDE THE CONTAINMENT LOCATED AS CLOSE TO THE CONTAINMENT AS PRACTICAL.
6. SOLENOID OPERATED GLOBE VALVES MAY BE ADOPTED FOR THE AIR OPERATED VALVES.
7. THIS DOCUMENT PROVIDES A FUNCTIONAL DEFINITION OF THE REQUIRED SYSTEM LEVEL PROCESS MONITORING AND CONTROL INSTRUMENTATION. IT DOES NOT ADDRESS DETAILS OF THE METHODS BY WHICH SIGNALS FROM THESE COMPONENTS WILL BE PROCESSED. THIS PROCESSING MAY INVOLVE THE PLANT MULTIPLEXING SYSTEM (H23) OR MAY UTILIZE HARDWIRING. SPECIFIC ELECTRICAL ISOLATION REQUIREMENTS SHOWN ON THIS DRAWING MAY BE UNNECESSARY IF MULTIPLEXED SIGNAL TRANSMISSION PROVIDES INHERENT ISOLATION.
8. ALL ALARMS SHALL BE LOCATED IN THE MAIN CONTROL ROOM.
9. ALL INPUTS TO C91/PMCS SHALL BE CONTINUOUSLY RECORDED.
10. THE LDS SHALL BE DESIGNED IN ACCORDANCE WITH THE SYSTEM DESIGN SPECIFICATION (E31-4010). OTHER PRIMARY CONTAINMENT ISOLATION (PCV) VALVES. WHICH ARE PART OF OTHER SYSTEMS, ARE NOT SHOWN IN THIS IED. THOSE VALVES ARE SHOWN ON THE LDS/IBD - INTERLOCK BLOCK DIAGRAM (E31-1030).
11. FOR REACTOR WATER LEVELS MONITORING, SEE B21-1010.
12. FOR DRYWELL PRESSURE MONITORING, SEE B21-1010.
13. FOR DETECTION OF RADIATION LEAKAGE INTO COOLING WATER SUPPLYING RECIRC PUMP, RHR AND CUW HEAT EXCHANGERS, SEE D11-1040.
14. LETTER DESIGNATIONS FOR FOUR DIVISIONS ARE AS FOLLOWS:

    A,E,J,N - DIVISION 1
    B,F,K,P - DIVISION 2
    C,G,L,R - DIVISION 3
    D,H,M,S - DIVISION 4

15. IF HEAT TRACING OF SAMPLE LINE IS NECESSARY TO PREVENT CONDENSATION, THE MAXIMUM ALLOWABLE SAMPLE TEMPERATURE IS LIMITED BY THE PHOTO MULTIPLIER TUBES IN THE MONITORING CHANNELS.
16. BALL VALVE MAY BE ADOPTED FOR THIS GATE VALVE.
17. DTM, TLU, SLU, OLU ARE PART OF SAFETY SYSTEM LOGIC AND CONTROL, (SEE REFERENCE DOCUMENT 12).
    A. DTMs SHOWN ON SHEETS 3 & 4 PROCESS SENSOR INPUTS FOR MSIV ISOLATION TRIP LOGIC.
    B. DTMs SHOWN ON SHEETS 5 & 6 PROCESS SENSOR INPUTS FOR ECCS ISOLATION TRIP LOGIC.
    C. DTMs SHOWN ON SHEETS 7 & 10 PROCESS SENSOR INPUTS FOR AUXILIARY ESF ISOLATION TRIP LOGIC.
    D. TLUs AND OLUs SHOWN ON SHEET 3 AND SHEET 4 PROCESS 2-OUT-OF-4 COINCIDENCE LOGIC FOR MSIV CLOSURE TRIP.
    E. SLUs SHOWN ON SHEETS 5 & 6 PROCESS 2-OUT-OF-4 COINCIDENCE LOGIC FOR ECCS ISOLATION.
    F. SLUs SHOWN ON SHEETS 7 & 10 PROCESS 2-OUT-OF-4 COINCIDENCE LOGIC FOR AUXILIARY ESF ISOLATION.
18. RMUs, MUX, EMS AND NEMS ARE PART OF THE MULTIPLEXING SYSTEM (H23).
19. ALL INSTRUMENT LINES ARE 20A-SS (STAINLESS STEEL) SCHEDULE 40. SAMPLING LINES ARE 32A-SS SCHEDULE 40.

REFERENCES

	MPL NO.
1. REACTOR CORE ISOLATION COOLING SYSTEM P&ID	E51-1010
2. NUCLEAR BOILER SYSTEM P&ID	B21-1010
3. REACTOR WATER CLEANUP SYSTEM P&ID	G31-1010
4. SAMPLING SYSTEM P&ID	P91-1010
5. PROCESS RADIATION MONITORING SYSTEM IED	D11-1040
6. RADWASTE SYSTEM P&ID	K17-1010
7. INSTRUMENT AIR SYSTEM P&ID	P52-1010
8. ESSENTIAL MULTIPLEXING SYSTEM	H23-1030
9. LEAK DETECTION & ISOLATION SYSTEM IBD	E31-1030
10. REACTOR PROTECTION SYSTEM IED	C71-1040
11. STANDBY LIQUID CONTROL SYSTEM IBD	C41-1030
12. SAFETY SYSTEM & LOGIC CONTROL DS	A32-5280
13. PERFORMANCE MONITORING & CONTROL SYSTEM IED	C91-1010
14. NEUTRON MONITORING SYSTEM IED	C51-1010
15. SUPPRESSION POOL CLEAN-UP SYSTEM P&ID	G51-1010
16. REACTOR BUILDING WATER CLEAN-UP SYSTEM P&ID	P21-1010
17. HVAC NORMAL COOLING WATER SYSTEM P&ID	P24-1010
18. STANDBY GAS TREATMENT SYSTEM P&ID	T22-1010
19. ATMOSPHERIC CONTROL SYSTEM P&ID	T31-1010
20. FLAMMABILITY CONTROL SYSTEM P&ID	T49-1010
21. HEATING, VENTILATING & AIR CONDITIONING P&ID	U41-1010

SUPPORTING DOCUMENTS

	MPL NO.
1. PIPING AND INSTRUMENT DIAGRAM SYMBLOS	A10-3030
2. PROCESS INSTRUMENTATION	A11-3030
3. GROUP CLASSIFICATION & CONTAINMENT ISOLATION DIAG	A11-1030

LEGEND

SERIAL MULTIPLEXED DATA

MULTIPLE INSTRUMENT ELECTRICAL WIRING

SERIAL DATA

ABBREVIATIONS:

OLU - OUTPUT LOGIC UNIT

TLU - TRIP LOGIC UNIT

MPL NO. E31-1040

Figure 5.2-8 – Leak Detection and Isolation System IED (Sheet 1 of 10)

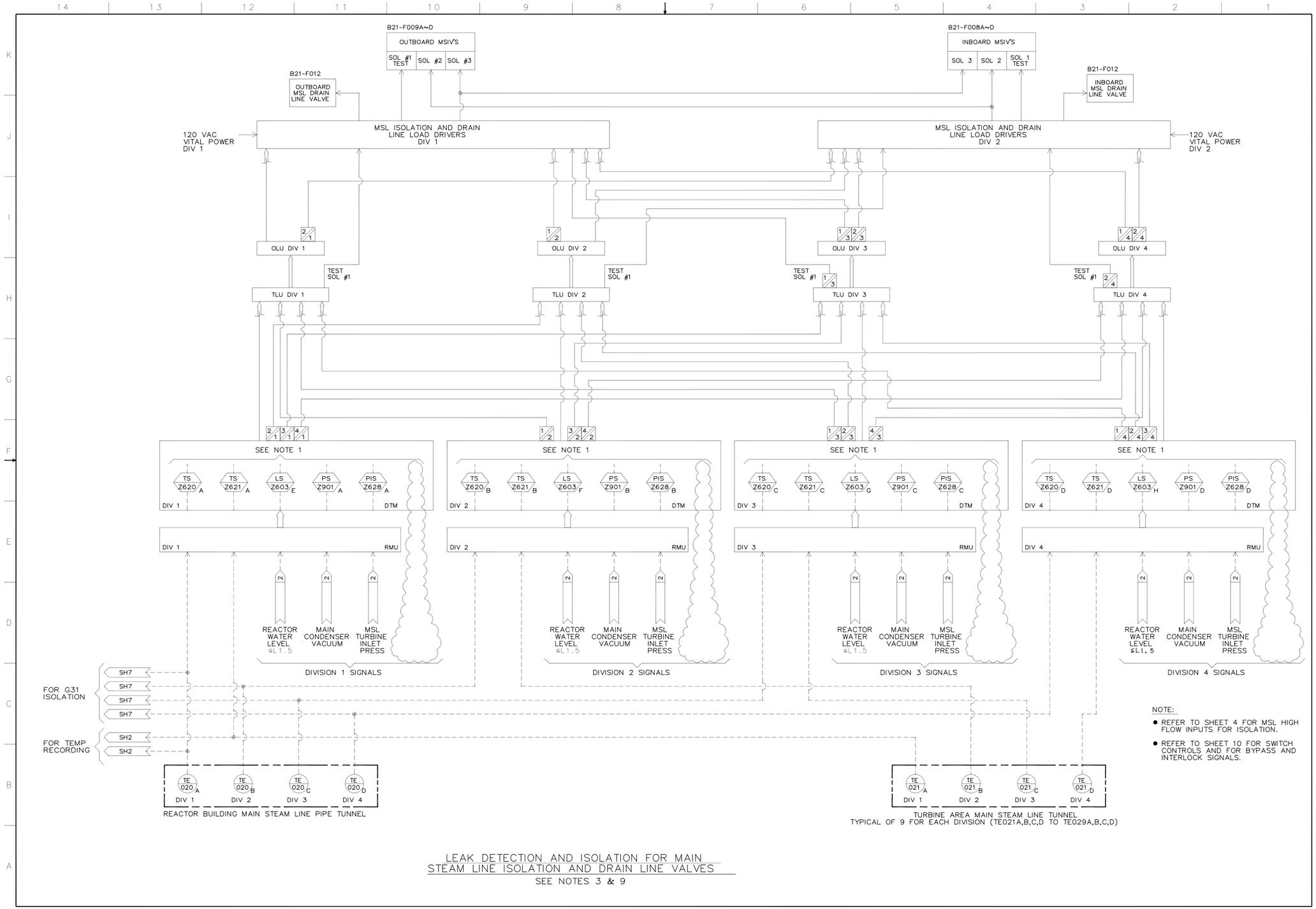

Figure 5.2-8 – Leak Detection and Isolation System IED (Sheet 3 of 10)

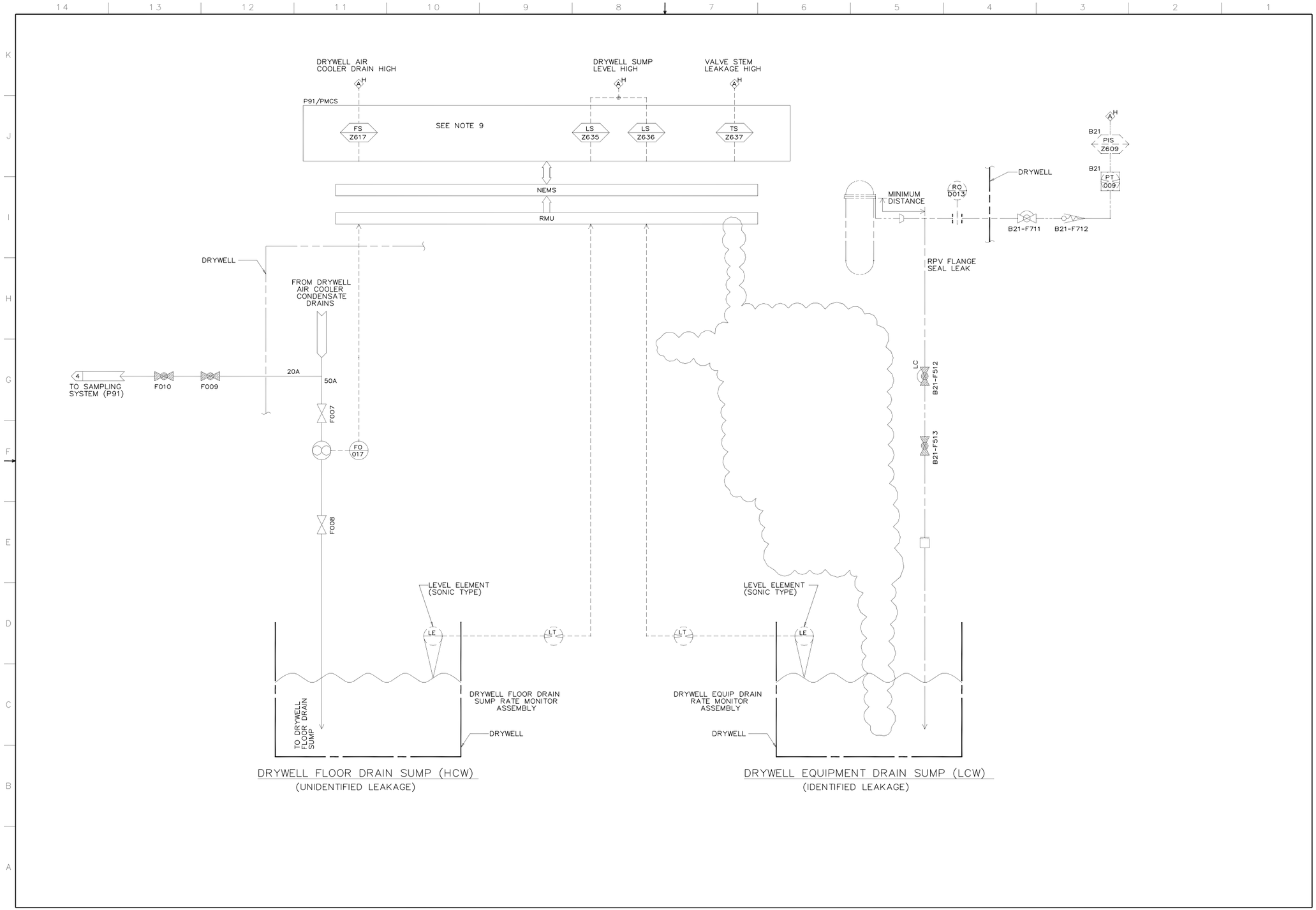

Figure 5.2-8 – Leak Detection and Isolation System IED (Sheet 8 of 10)

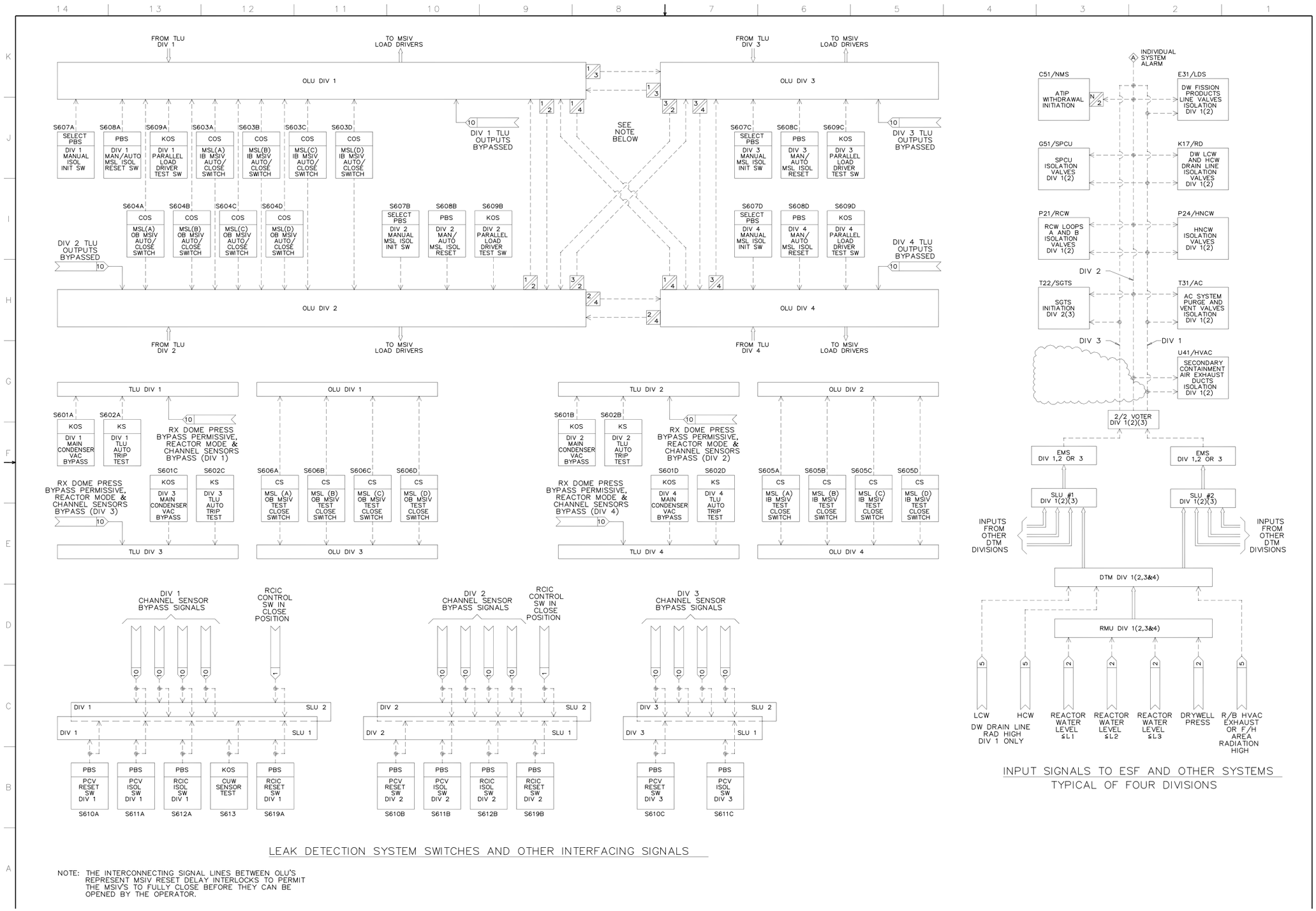

Figure 5.2-8 – Leak Detection and Isolation System IED (Sheet 10 of 10)