10.4 Other Features of Steam and Power Conversion

The information in this section of the reference ABWR DCD, including all subsections, tables, and figures is incorporated by reference with the following departures and supplements.

STD DEP T1 3.4-1

STP DEP 1.2-2

STD DEP 7.7-3

STD DEP 9.2-3 (Figure 10.4-5)

STD DEP 10.4-1 (Figure 10.4-2)

STP DEP 10.4-2 (Table 10.4-1, Table 10.4-3, Figure 10.4-3)

STP DEP 10.4-3 (Table 10.4-2, Figure 10.4-1)

STD DEP 10.4-5 (Tables 10.4-4, 10.4-5 and 10.4-6, Figures 10.4-5, 10.4-6, 10.4-7, and 10.4-8)

STD DEP 10.4-6

STD DEP 10.4-7 (Figure 10.4-9)

STD DEP Admin

10.4.1.2.1 General Description

STP DEP 10.4-2

The main condenser is a single pass, single pressure ~~*multipressure*~~*, three-shell,* ~~*reheating*~~*/deaerating unit. Each shell is located beneath its respective low-pressure turbine.*

~~*The three condenser shells are designated as the low-pressure shell, the intermediate-pressure shell, and the high-pressure shell.*~~ The three condenser shells are cross-connected to equalize pressure. *Each shell has at least two tube bundles. Circulating water flows in* ~~*series*~~ parallel *through the three single-pass shells (Figure 10.4-3).*

10.4.1.2.2 Component Description

Table 10.4-1 provides general condenser design data. ~~*and reference data that is typical of condensers operating with closed loop circulating water systems. Nothing in this section precludes the use of a single pressure condenser and parallel (instead of series) circulating water system since these will have no effect on the Nuclear Island.*~~

10.4.1.5.2 Pressure

STP DEP 10.4-2

Condenser pressure is measured by gauges, pressure switches, and electronic pressure transducers. These instruments provide signals to annunciators, trip units, the Turbine Control System~~, Recirculation Flow Control System~~ and the Steam Bypass and Pressure Control System. In addition, four independent and redundant safetyrelated pressure transmitters provide input signals to the Nuclear Steam Supply System.

~~Condenser pressure is an input to the Reactor Recirculation System. Recirculation pump runback is initiated upon the trip of a circulating water pump when condenser pressure is higher than some site specific preset value. Runback is automatically initiated~~ In case of main condenser vacuum decreasing, the control room operator will reduce reactor power when required to avoid a turbine trip on high condenser pressure.

10.4.2.2 Description

STP DEP 10.4-3

The MCES (figure 10.4-1) consists of two 100%-capacity, double stage, steam jet air ejector (SJAE) units (complete with ~~intercondenser~~ intercondensers*) for power plant operation, and ~~a~~* two, 100% *mechanical vacuum ~~pump~~* pumps *for use during startup. The last stage of the SJAE is a noncondensing stage. One SJAE unit is normally in operation and the other is on standby.*

During the initial phase of startup, when the desired rate of air and gas removal exceeds the capacity of the steam jet air ejectors, and nuclear steam pressure is not adequate to operate the SJAE units, the mechanical vacuum ~~pump~~ pumps *~~establishes~~* establish *a vacuum in the main condenser and other parts of the power cycle. The discharge from the vacuum ~~pump~~* pumps *is then routed to the ~~Turbine Building compartment exhaust system~~* plant vent stack*, since there is then little or no effluent radioactivity present. Radiation detectors in the ~~Turbine Building compartment exhaust system~~* Offgas collecting duct *and plant vent alarm in the main control room if abnormal radioactivity is detected (Section 7.6). Radiation monitors are provided on the main steamlines which trip the vacuum ~~pump~~* pumps *if abnormal radioactivity is detected in the steam being supplied to the condenser.*

The SJAEs are placed in service to remove the gases from the main condenser after a pressure of about ~~0.034 to 0.051 MPa~~ 7kPa *absolute* or less *is established in the main condenser by the mechanical vacuum pump*s *and when sufficient nuclear steam pressure is available.*

During normal power operations, the SJAEs are ~~normally~~ driven by ~~crossaround steam, with~~ the main steam ~~supply on automatic standby~~. ~~The main steam supply, however, is normally used during startup and low load operation, and auxiliary steam is available for normal use of the SJAEs during early startup, should the mechanical vacuum pump prove to be unavailable.~~

10.4.2.5.2 Mechanical Vacuum Pumps

Pressure is measured on the suction line of the mechanical vacuum ~~pump~~ pumps *~~by a pressure transmitter or switch. Upon reaching a preset vacuum, the pressure switch energizes a solenoid valve, which allows additional seal water to be pumped to the vacuum pump~~.* The pumps start with the seal water flow signal within the preset range. *Seal pump discharge pressure is locally monitored. Seal water cooler discharge temperature is measured by a temperature indicating transmitter or switch. On high temperature, the switch activates an annuciator in the main control room. The vacuum ~~pump~~* pumps *exhaust stream is discharged to the ~~Turbine Building compartment exhaust system~~* Offgas collecting duct, *which provides for radiation monitoring of the system effluents prior to their release to the monitored vent stack and the atmosphere.*

The vacuum ~~pump~~ pumps *~~is~~* are *tripped and ~~its~~* their *discharge ~~valve~~* valves *~~is~~ are closed upon receiving a main steam high-high radiation signal.*

10.4.3.2.1 General Description

STD DEP 10.4-1

The turbine gland seal system is illustrated in Figure 10.4-2. The turbine gland seal system consists of a gland steam evaporator, *sealing steam pressure regulator, sealing steam header, a gland steam condenser with two full-capacity exhauster blowers, and the associated piping, valves and instrumentation.*

10.4.3.2.2 System Operation

The turbine is equipped with seals for a separate steam seal system. Both high and low pressure packings are fed with steam from a non-radioactive source, separate from the turbine at all loads. Non-radioactive steam is produced by the steam seal evaporator and fed to the sealing steam header through the sealing steam pressure regulator.

The steam seal evaporator is a shell-and-tube-type heat exchanger. The source of heating steam for the evaporator is the turbine auxiliary steam header (main steam) during low load operation and turbine extraction during normal operation. Heating steam is passed through the tube bundle, which is immersed in condensate to be evaporated. During startup and low load operation, heating steam is supplied from the main steam lines ahead of the turbine main stop valves. Shellside pressure is controlled by modulating position of control valves in the main steam source. As turbine load is increased, the heating steam source is switched to a turbine extraction when the extraction pressure becomes sufficiently high. Relief valves protect the tubeside and shellside from overpressure. Steam that is condensed in the tube bundle flows into a drain tank. It is then routed to a feedwater heater or to the main condenser by the drain tank level control system.

Condensate in the steam seal evaporator is controlled by the shellside level control system. Level controls on the evaporator maintain a set level by controlling the position of the evaporator water feed valve and hence the rate of condensate flow into the evaporator, according to the demand for sealing steam.

*The seal steam header pressure is regulated automatically by ~~a pressure controller~~*the sealing steam pressure regulator. Pressure is controlled at approximately 27.6 kPaG. Relief valves protect the sealing steam header from overpressure. *During startup ~~and low load operation~~, the seal steam is supplied from ~~the main steam line or auxiliary steam header~~* the auxiliary boiler. *~~Above approximately 50% load, however, sealing steam is normally provided from the heater drain tank vent header.~~* When reactor pressure exceeds a prescribed value during plant startup and up to rated power operation, sealing steam is normally provided by the gland steam evaporator. *At all loads, gland sealing can be achieved using auxiliary steam so that plant power operation can be maintained without appreciable radioactivity releases even if highly abnormal levels of radioactive contaminants are present in the process steam, due to unanticipated fuel failure in the reactor.*

10.4.3.3 Evaluation

The TGSS is designed to prevent leakage of radioactive steam from the main turbine shaft glands and the valve stems. The high-pressure turbine shaft seals must accommodate a range of turbine shell pressure from full vacuum to approximately ~~1.52~~ 1.77 *MPaA. The low-pressure turbine shaft seals operate against a vacuum at all times. The gland seal outer portion steam/air mixture is exhausted to the gland steam condenser via the seal vent annulus (i.e., end glands), which is maintained at a slight vacuum. The radioactive content of the sealing steam,* if any*, which eventually exhausts to the plant vent and the atmosphere (Section 11.3), makes a negligible contribution to overall plant radiation release.* During normal power operation, clean steam from the gland seal evaporator is used. *In addition, the auxiliary steam system is designed to provide a 100% backup to the normal gland seal process steam supply. A full capacity gland steam condenser is provided and equipped with two 100% capacity blowers.*

10.4.3.5 Instrumentation Application

STD DEP 10.4-1

10.4.3.5.3 Steam Seal Evaporator

10.4.3.5.3.1 Pressure

The Plant Information and Control System continuously monitors steam seal evaporator tubeside and shellside pressures. Heating steam pressure is monitored to determine when it is high enough to switch over to the extraction source from the main steam source.

10.4.3.5.3.2 Level

Condensate level in the steam seal evaporator shell is continuously monitored as part of the function of controlling the rate of condensate flow for evaporation. High and low level alarms are provided in the main control room.

Condensate level in the tubeside drain tank is continuously monitored as part of the function of controlling the flow of condensed heating steam from the tubes. High and low level alarms are provided in the main control room.

10.4.4.1.2 Power Generation Design Bases

STD DEP 10.4-6

Power Generation Design Basis Three—The TBS is designed, in conjunction with the reactor systems, to provide for a ~~40~~ 33% electrical step-load reduction without reactor trip. The systems will also allow a turbine trip ~~but~~ below 33% power without lifting the main steam safety valves.

10.4.4.2.1 General Description

The TBS, in combination with the reactor systems, provides the capability to shed ~~40%~~ 33% of the T-G rated load without reactor trip and without the operation of safety/relief valves. A load rejection in excess of ~~40%~~ 33% is expected to result in reactor trip ~~but without~~ with operation of ~~any~~ steam safety ~~valves~~ valves at high power levels.

10.4.4.2.2 Component Description

STD DEP Admin

One valve chest is provided and houses three individual bypass valves. Each bypass valve is an angle body type valve operated by hydraulic fluid pressure with spring action to close. The valve chest assembly includes hydraulic supply and drain piping, three hydraulic accumulators (one for each bypass valve), servo valves, fast acting ~~servo~~ solenoid valves, and valve position transmitters.

10.4.4.2.3 System Operation

STD DEP 10.4-6

When the reactor is operating in the ~~automatic load following~~ plant automation mode, ~~a 10% load reduction can be accommodated without opening the bypass valves, and a 25% load reduction can be accommodated with momentary opening of the bypass valves.~~ load changes are coordinated by the Automatic Power Regulator (Subsection 7.7.1.7). These load changes are accomplished by change in reactor ~~recirculating~~ recirculation flow ~~without any control~~ and/or rod control motion, without opening of the turbine bypass valves.

10.4.4.5 Instrumentation Applications

Input to the system also includes ~~load~~ turbine steam flow demand and load reference signals from the turbine speed load control system. The SB&PC System uses these ~~three~~ signals to position the turbine control valves and~~,~~ the bypass valves~~, and, indirectly the reactor internal recirculation pump speed~~. A complete description of the control system is included in Chapter 7.

10.4.5 Circulating Water System

STP DEP 10.4-2

The Circulating Water System (CWS) provides cooling water for removal of the power cycle waste heat from the main condensers and transfers this heat to the power cycle heat sink. For STP 3 & 4, the power cycle heat sink utilizes a Main Cooling Reservoir (MCR) to reject power cycle waste heat.

10.4.5.2.1 General Description

STP DEP 10.4-2

The Circulating Water System (Figure 10.4-3) consists of the following components: (1) ~~screen house~~ intake structure *and intake screens, pumps,(2) condenser water boxes and piping and valves, (3) tube side of the main condenser, (4) water box fill and drain subsystem, and (5) related support facilities such as for system water treatment, inventory blowdown and general maintenance.*

The power cycle heat sink is designed to maintain the temperature of the water entering the CWS within the range of ~~0~~ 4.45*°C to 37.78°C. The CWS is designed to deliver water to the main condenser within a temperature range of 4.45°C to 37.78°C. ~~The 4.45°C minimum temperature is maintained, when needed, by warm water recirculation.~~*

The cooling water is circulated by ~~at least three~~ four 25% capacity *fixed speed motor-driven pumps* per unit*.*

The pumps are arranged in parallel and discharge into a common header. The discharge of each pump is fitted with a butterfly valve. This arrangement permits isolation and maintenance of any one pump while the others remain in operation.

The CWS and condenser ~~is~~ are *designed to permit isolation of each set of ~~the three series connected~~* single pass *tube bundles to permit repair of leaks and cleaning of water boxes while operating at reduced power.*

10.4.5.2.3 System Operation

STP DEP 1.2-2

The circulating water pumps are tripped, ~~and~~ the pump and condenser isolation valves are closed, and the siphon break valves are opened *in the event of a system isolation signal from the condenser pit high-high level switches.* These condenser pit high-high level switches are two-out-of-four logic*. A condenser pit high level alarm is provided in the control room. The pit water level trip is set high enough to prevent inadvertent plant trips from unrelated failures, such as a sump overflow.*

STP DEP 10.4-2

Draining of any set of ~~series connected~~ condenser water boxes is initiated by closing the associated condenser isolation valves and opening the drain connection and water

box vent valve. When the suction standpipe of the condenser drain pump is filled, the pump is manually started. A low level switch is provided in the standpipe, on the suction side of the drain pump. This switch will automatically stop the pump in the event of low water level in the standpipe to protect the pump from excessive cavitation.

Before pump startup, the Turbine Service Water pumps provide for filling of the CWS. The condenser water box vent system assists with removing air from the system.

10.4.5.3 Evaluation

STP DEP 1.2-2

Based on the above conservative assumptions, the CWS and related facilities are designed such that the selected combination of plant physical arrangement and system protective features ensures that all credible potential circulating water spills inside the Turbine Building remain confined inside the ~~condenser pit~~ Turbine Building.

10.4.5.5 Instrumentation Applications

STD DEP T1 3.4-1

STP DEP 10.4-2

To exclude air in the condenser water boxes during normal operation, water box vent valves are automatically opened by the water level high signal. Manual controls for the vent valves are also provided.

A circulating pump starts at approximately 25% of rated flow when the main condenser water box outlet valves are partially opened for water filling. *Level switches or transmitters monitor water level in the condenser discharge water boxes and provide ~~a permissive for starting the circulating water pumps~~* confirmation of water fill in the circulating water system during the operation of the circulating water pumps. *These level switches ensure that the supply piping and the condenser water boxes are full of water prior to* the *circulating water pump ~~startup~~* achieving rated flow, *thus preventing water pressure surges from damaging the supply piping or the condenser.*

Monitoring the performance of the Circulating Water System is accomplished by differential pressure transducers across ~~each half~~ of the condenser with remote differential pressure indicators located in the main control room. Temperature signals from the supply and discharge sides of the condenser are transmitted to the ~~plant computer~~ Plant Information and Control Network *for recording, display and condenser performance calculations.*

~~*To prevent icing and freeze-up when the ambient temperature of the power cycle heat sink falls below 0°C, warm water from the discharge side of the condenser is recirculated back to the screen house intake. Temperature elements, located in each condenser supply line and monitored in the main control room, are utilized in throttling the warm water recirculation valve, which maintains the minimum inlet temperature of approximately 4.45°C.*~~

The recorded daily water temperature in the MCR was analyzed to evaluate the potential ice effects at the site. There is no risk of ice formation in the MCR (Section 2.4S.7). Therefore, design features, such as warm water recirculation, are not required to prevent icing and freeze up.

10.4.5.7 Portions of the CWS Outside of Scope of ABWR Standard Plant

STP DEP 10.4-2

The portion outside of the ABWR Standard Plant includes:

> ~~*screen house*~~ intake structure *and intake screens; pumps and pump discharge valves; and related support facilities such as makeup water, system water treatment, inventory blowdown, and general maintenance.*

The following site-specific supplement augments that provided in this subsection.

Circulating water enters the closed loop system via the intake structure located on the west side of the MCR north dike. The intake structure houses the eight circulating water pumps and respective screens and trash racks. Three dual flow screens and multiple trash racks serve each pump. The intake structure also accommodates the Turbine Service Water pumps which share pump bays with the circulating water pumps.

The circulating water is pumped through the main condenser and back to the MCR via a discharge outfall. The vacuum priming pumps, located at the CWS return piping on the MCR embankment, assist line priming during pump start-up, and evacuate air trapped at the high point of the CWS during operation.

10.4.5.7.2 Power Generation Design Basis (Interface Requirements)

The following site-specific supplements address the interface requirements for this subsection:

(1) The CWS design for the portions outside the scope of the reference ABWR DCD is compatible with the requirements as described in Subsection 10.4.5.2.

Four 25% capacity fixed speed circulating water pumps per unit discharge into a common header shown in Figure 10.4-3. The discharge of each pump is fitted with a motor operated butterfly valve. The circulating water is pumped through the main condenser and back to the MCR via a discharge outfall at a nominal rate of 272,550 m^3/h per unit. To provide capability for condenser waterbox isolation, isolation valves are located on the circulating water inlet and outlet lines.

The Hypochlorination System chlorinates the CWS to control biological fouling of the condenser tubes and circulating water piping. Liquid sodium hypochlorite is employed, thereby eliminating the potential gaseous chlorine hazards. The Hypochlorination System for the CWS has the capability to

inject a sodium bromide solution, with or without a biodispersant in conjunction with sodium hypochlorite for improving biological fouling control.

The CWS piping is designed to a pressure of 0.69 MPaG in consideration of normal and transient conditions. Materials selected for the CWS are those that withstand long-term corrosion.

Blowdown from the Ultimate Heat Sink (UHS) is pumped via the Reactor Service Water pumps into the CWS downstream of condenser outlet isolation valves for discharge to the MCR.

(2) As described in Subsection 10.4.5.3, the CWS, including those portions outside the scope of the reference ABWR DCD, is not a safety-related system. A postulated failure in the CWS in any portion outside the scope of the reference ABWR DCD is enveloped by the flooding resulting from an MCR breach as discussed in Subsection 2.4S.4.

(3) Pre-operational testing of the CWS is performed per Subsection 14.2.12.1.60. All active and selected passive components of the CWS are accessible for inspection and maintenance/testing during normal operation. The CWS is tested and checked for leakage integrity, as may be appropriate, following major maintenance and inspection.

(4) Local pressure gauges are furnished throughout the CWS, and temperature instruments with inputs to the Plant Information and Control System are furnished on the inlet and outlet circulating water lines to the condenser water boxes. Level indication is provided in the main control room for the MCR level and the level in each circulating water pump bay.

A traveling screen wash control system automatically initiates the cycling and cleaning of the traveling screens when high differential level is sensed across a screen. The screen wash control system shuts down on loss of spray header pressure. The traveling screens are cleaned of debris via high pressure spray water jets which are pressurized by the screen wash pumps. The trash racks are cleaned by a set of automatic raking systems per unit.

On top of each embankment cross-over pipeline, a vacuum breaker will be installed to break the vacuum upon a corresponding CWS shutdown or a power failure event.

(5) The design for the portions outside of scope of ABWR is in accordance with the flood protection requirements as described in Subsection 10.4.5.6. Flood protection is described in Section 3.4.

10.4.5.8 Power Cycle Heat Sink

The conceptual design information in this subsection of the reference ABWR DCD is replaced with the following site-specific supplement.

The STP 3 & 4 Power Cycle Heat Sink uses an MCR to reject power cycle waste heat. The MCR is formed by approximately 13 miles of embankment constructed above the natural ground surface, totally enclosing 7,000 acres of surface area at a normal maximum operating level of elevation 49 ft MSL. The MCR contains approximately 202,700 acre-feet of water at normal maximum operating elevation of 49 feet MSL. The MCR is further discussed in detail in Subsection 2.4S.8.

10.4.5.8.2 Power Generation Design Basis (Interface Requirements)

The following site-specific supplements address the interface requirements for this subsection:

(1) The power cycle heat sink design is compatible with the requirements as described in Subsection 10.4.5.2.

The heated circulating water from the main condenser is discharged to the MCR, where heat content of the circulating water is transferred to the ambient air via evaporative cooling and conduction. After passing through the MCR, the cooled water is recirculated back to the main condenser, to complete the closed cycle circulating water loop.

The Reservoir Makeup Pumping Facility (RMPF) supplies makeup water from the Colorado River to the MCR to replace water lost to evaporation, blowdown, and seepage.

The final plant discharge is the existing blowdown facility at the Colorado River, downstream of the RMPF. The blowdown facility will be used to limit the Total Dissolved Solids (TDS) concentration build-up in the MCR.

(2) As described in Subsection 10.4.5.3, the power cycle heat sink is not a safety-related system. Flooding resulting from an MCR breach is discussed in detail in Subsection 2.4S.4.

(3) The MCR is accessible for periodic water quality inspection and testing. The MCR embankment is accessible for visual inspection.

(4) Instrument applications for the power cycle heat sink are described in Subsection 10.4.5.5. The MCR is designed to maintain the temperature of the water entering the CWS within the range of 4.45°C to 37.78°C. Level indication is provided in the main control room for the MCR level and the level in each circulating water pump bay.

(5) The flooding resulting from an MCR breach is discussed in detail in Subsection 2.4S.4.

(6) The MCR continues to serve as the heat sink for the Turbine Service Water System in the event of loss of offsite power. The Turbine Service Water System (Section 9.2.16) is designed to operate with electrical power from the Combustion Turbine Generator in the absence of offsite power.

10.4.6.5 Instrumentation Applications

STD DEP 7.7-3

Other system instrumentation includes ~~turbidity and other~~ water quality measurements as necessary for proper operation of the filters, demineralizer, and miscellaneous support services, and programmable controllers for automatic supervision of the resin transfer and cleaning cycles. The control system prevents the initiation of any operation or sequence of operations which would conflict with any operation or sequence already in progress whether such operation is under automatic or manual control.

10.4.7.2.1 General Description

STD DEP 9.2-3

STD DEP 10.4-5

The Condensate and Feedwater System (Figures 10.4-5 and 10.4-6) consists of the piping, valves, pumps, heat exchangers, controls and instrumentation, and the associated equipment and subsystems which supply the reactor with heated feedwater in a closed steam cycle utilizing regenerative feedwater heating. The system described in this subsection extends from the main condenser outlet to (but not including) the seismic interface restraint outside of containment. The remainder of the system, extending from the restraint to the reactor, is described in Chapter 5. Turbine cycle steam is utilized for a total of six stages of closed feedwater heating. The drains from each stage of the low-pressure feedwater heaters are cascaded through successively lower pressure feedwater heaters except the lowest and second lowest pressure feedwater heaters which drain to the low pressure heater drain tanks for each string. The drains from each low pressure heater drain tank flow into the external drain coolers of each lowest pressure feedwater heater and finally *to the main condenser. The high pressure heater drains are pumped backward to the reactor feedwater pumps suction. The cycle extraction steam, drains and vents systems are illustrated in Figures 10.4-7 and 10.4-8.*

The CFS consists of four ~~33-50%~~ 33% *capacity condensate pumps (three normally operating and one on automatic standby),* four 33% capacity condensate booster pumps, (three normally operating and one on automatic standby), *~~three normally operated 33-65%~~* four 33% *capacity reactor feedwater pumps* (three normally operating, one on automatic standby), *four stages of low-pressure feedwater heaters, and two stages of high- pressure feedwater heaters, piping, valves, and instrumentation. The condensate pumps take suction from the condenser hotwell and discharge the deaerated condensate into one common header which feeds the condensate filter/demineralizers. Downstream of the condensate demineralizers, the condensate is taken by a single header and flows ~~in parallel through five~~* through the *auxiliary condenser/coolers, one gland steam exhauster condenser~~,~~ and two sets of SJAE condensers, ~~offgas recombiner condenser (coolers)~~. The condensate then branches into three parallel strings of low pressure feedwater heaters. Each string*

contains four stages of low-pressure feedwater heaters. The strings join together at a common header which is routed to the suction of the reactor feedwater pumps.

Another input to the feedwater flow consists of the drains which are pumped backward and injected into the feedwater stream at a point between the fourth stage low-pressure feedwater heaters and the suction side of the reactor feed pumps. These drains, which originate from the crossaround steam moisture separators ~~and reheaters~~ and from the two sets of high-pressure feedwater heaters, are directed to the heater drain ~~tanks~~ tank*. The ~~reheater and top~~* HP *heater drains are deaerated in the ~~crossaround heaters~~* heater drain tank *so that, after mixing with condensate, the drains are compatible with the reactor feedwater quality requirements for oxygen content during normal power operations. ~~Each~~* The *heater drain pump takes suction from the heater drain tank and injects the deaerated drains into the feedwater stream at the suction side of the reactor feed pumps.*

A bypass is provided around the reactor feedwater pumps to permit supplying feedwater to the reactor during early startup without operating the feedwater pumps, using only the condensate pump and/or condensate booster pump *head.*

Another bypass~~, equipped with a feedwater flow control valve,~~ is provided around the high-pressure heaters to ~~perform two independent functions. During startup, the bypass and its flow control valve are used to regulate the flow of feedwater supplied by either the condensate pumps or the reactor feed pumps operating at their minimum fixed speed. During power operation, the heater bypass function is to~~ maintain full feedwater flow capability when a high-pressure heater string must be isolated for maintenance.

During startup, the flow control valve is used to regulate the flow of feedwater supplied by either the condensate pumps or the reactor feed pumps operating at their minimum fixed speed.

To minimize corrosion product input to the reactor during startup, recirculation lines to the condenser are provided from the ~~reactor feedwater pump~~ condensate booster pump *suction* and discharge *header and from the high-pressure feedwater heater outlet header.*

10.4.7.2.2 Component Description

STD DEP 10.4-5

Condensate Booster Pumps - Four identical and independent, 33% capacity, fixed speed motor-driven condensate booster pumps are provided between the condensate purification system and the low pressure feedwater heaters. Three pumps normally operate manually in parallel, with the fourth pump in ~~automatic~~ standby. The condensate booster pumps, in combination with the main condensate pumps, provide the required NPSH for the ~~reactor~~main feedwater pumps and achieve ~~a reasonable~~the design pressure for the condensate purification system.

Low-pressure Feedwater Heaters*—Three parallel and independent strings of four closed feedwater heaters are provided, and one string is installed in each condenser neck. The heaters have integral drain coolers* except for the lowest pressure heaters which have separate drain coolers, *and their drains are cascaded to the next lower stage heaters of the same string except for the lowest* and second lowest *pressure heaters which drain to* the low pressure drain tanks, drain coolers of the lowest pressure heaters and finally to *the main condensers*, successively*. The heater shells are either carbon steel or low alloy ferritic steel, and the tubes are stainless steel. Each low pressure feedwater heater string has an upstream and downstream isolation valve which closes on detection of high level in any one of the low pressure heaters in the string.*

High-pressure Feedwater Heaters*—Two parallel and independent strings of two high- pressure feedwater heaters are located in the high-pressure end of the Turbine Building. The No. 6 heaters, which have integral drain coolers, are drained to the No. 5 heaters. The No. 5 heaters, which are condensing only, drain to ~~their respective heater~~ the* heater *drain ~~tanks~~* tank*. The heater shells are carbon steel, and the tubes are stainless steel.*

Heater string isolation and bypass valves are provided to allow each string of high-pressure heaters to be removed from service, thus slightly reducing final feedwater temperature but requiring no reduction in ~~plant~~ reactor *power. The heater string isolation and bypass valves are actuated on detection of high level in either of the two high-pressure heaters in the string.*

The startup and operating ~~vents~~ vents *from the steam side of ~~the~~* each *feedwater ~~heaters are~~* heater is *piped to the main condenser. ~~except. for the highest pressure heater operating vents which discharge to the cold reheat lines.~~ Discharges from shell relief valves ~~on the steam side of~~* for *the feedwater heaters are piped to the main condenser.*

High Pressure ***Heater Drain Tank****—*A high pressure heater *~~Heater~~ drain ~~tank(s) are~~* tank is *provided. Drain tank level is maintained by the heater drain pump control valves in the drain pump discharge and recirculation lines.*

The drain ~~tanks~~ tank *and tank drain lines are designed to maintain the drain pumps ~~available~~* net positive *suction head* (NPSH) *in excess of the pump required minimum under all anticipated operating conditions including, particularly, load reduction transients. This is achieved mainly by providing a large elevation difference between tank~~s~~ and pumps (approximately ~~15.24m~~* 14m*) and optimizing the drain lines which would affect the drain system transient response, particularly the drain pump suction line.*

Low Pressure Heater Drain Tanks - Three low pressure drain tanks are provided which receive the drains from the No.1 and No.2 feedwater heaters of each string, and drain to separate drain coolers of each lowest pressure heater. The drain tanks are installed at lower level than the No.1 and No.2 heaters to provide gravity-assisted drains.

Heater Drain Pumps— ~~*Two*~~ Four 33% *motor-driven heater drain pumps* are provided. Three pumps normally *operate in parallel, each taking suction from the heater drain tank and discharging into the suction side of the reactor feedwater pumps.* ~~*The drain system design allows each heater drain pump to be individually removed from service for maintenance while the balance of the system remains in operation, while the affected string drains dump to the condenser.*~~

Reactor Feedwater Pumps ~~*Three*~~ Four *identical and independent* ~~*33–65%*~~ 33% *capacity reactor feedwater pumps (RFP) are provided.* ~~*The*~~ *Three pumps* normally ~~*manually*~~ *operate in parallel and discharge to the high-pressure feedwater heaters. The pumps take suction downstream of the last stage low-pressure feedwater heaters and discharge through the high-pressure feedwater heaters. Each pump is driven by an adjustable speed drive.*

Isolation valves are provided which allow each reactor feed pump to be individually removed from service for maintenance, while the plant continues operation at full power on the three ~~*two*~~ *remaining pumps.*

10.4.7.2.3 System Operation

Normal Operation *- Under normal operating conditions, system operation is automatic. Automatic and redundant level control systems control the levels in all feedwater heaters, MS/RH drain tanks, the heater drain tanks, and the condenser hotwells. Feedwater heater levels are controlled by modulating drain valves. Control valves in the discharge and recirculation lines of the heater drain pumps control the level in the heater drain* ~~*tanks*~~ tank*. Valves in the makeup line to the condenser from the condensate storage tank and in the return line to the condensate storage tank control the level in the condenser hotwells.*

During power operation, feedwater flow is automatically controlled by the reactor feedwater pump speed that is set by the feed pump speed control system. The control system utilizes measurements of steam flow, feedwater flow, and reactor level to regulate the feedwater pump speed. During startup, feedwater flow is automatically regulated by the ~~*high-pressure heater bypass*~~ *flow control valve.*

10.4.7.5 Instrumentation Applications

Feedwater flow-control instrumentation measures the feedwater discharge flow rate from each reactor feed pump ~~*and the heater bypass startup flow control valve*~~*.* ~~*These*~~ The *feedwater system flow measurements are used by the Feedwater Control System (Subsection 7.7.1.4) to regulate the feedwater flow to the reactor to meet system demands.*

Pump flow is measured on the pump inlet line, and flow controls provide automatic pump recirculation flow for each reactor feedwater pump. Automatic and redundant controls also regulate the condensate flow through the auxiliary condensers (~~*offgas recombiner condenser/coolers,*~~ *gland steam condenser, and SJAE condensers) and maintains condensate pump minimum flow. Measurements of pump suction and*

discharge pressures are provided for all pumps in the system. Main feedpump suction pressure, discharge pressure and flow are indicated in the main control room.

10.4.10 COL License Information

10.4.10.1 Radiological Analysis of the TGSS Effluents

The following site-specific supplement addresses COL License Information Item 10.6.

The TGSS is designed to provide non-radioactive steam to the turbine gland seals. However, performance of a radiological analysis of the TGSS effluents is included in the offsite dose calculation manual (ODCM) that contains the methodology and parameters used for calculation of offsite doses resulting from gaseous and liquid effluents, including the turbine gland seal steam condenser exhaust. The ODCM includes operational setpoints for the radiation monitors and addresses programs for monitoring and controlling the release of radioactive material to the environment, which eliminates the potential for unmonitored and uncontrolled release. The ODCM also includes planned discharge flow rates, including the level at which the TGSS steam supply will be switched over to auxiliary steam.

Table 10.4-1 Condenser Design Data

Item	
Condenser Type	*~~Transversal~~* **Single Pressure**, *3 shells*, *~~Reheating/~~Deaerating*
Design duty, kW-total 3 shells	*~~254.91 x 10^4~~* **251.50 x 10^4**
Shell pressures w/~~26.7~~ **32.2**°*C Circ. water, ~~MPaA~~* **kPaA**	*~~0.007,0.009,0.012~~* **8.90**
Circulating water flow rate, m3/h	*~~136,290~~* **272,550**
Tubeside temp. rise-total 3 shells, °C	*~~16.8~~* **7.99**
Shell design pressure range, MPaA	*0 to 0.207**
Hotwell storage capacity-total 3 shells, L	*~~378,540~~* **355,780**
Channel design pressure range, MPaA	*~~0 to 0.586~~* **0.70**
Surface Area, cm2	*~~929.03 x 10^6~~* **1077.97x 10^6**
Number of tube passes per shell	*1*
Applicable codes and standards	*~~ASME Sect. VIII, Div. I,~~ ANSI Standards, HEI Standards for Steam Surface Condensers*

~~* Condenser surface and performance parameters are site dependent. Values quoted above are for reference purposes only.~~

* The value 207 kPaA is applied for the head of hydrostatic test.

Table 10.4-2 Main Condenser Evacuation System

Steam Jet Air Ejector (SJAE) System	
Number of ejector stages	*2*
Number of intercondenser	*2*
Number of ejector sets and capacity	*2 x 100%*
Required supply steam pressure, MPaA	*~~0.828~~* **1.47**
Normal steam supply source	*~~Cross around~~* **Main Steam**
Start-up Vacuum Pump System	
Number of pumps and capacity	*~~1~~* **2 x 100%**

Table 10.4-3 Circulating Water System

Circulating Water Pumps	
Number of Pumps	~~*3**~~ **4**
Pump type	*Vertical,~~ wet pit ~~* **concrete volute**
Unit flow capacity, m^3/h	~~*~45, 430*~~ **~68,140**
Driver type	~~*Fixed speed*~~ **Induction** *motor*

~~** Number of pumps and pump flow are site dependent. Values quoted above are for reference purposes only.*~~

Table 10.4-4 Condensate Purification System

Condensate Filters	
Filter type	*High efficiency (hollow fiber or equivalent)*
Number of vessels	*3**
Design flow rate per vessel, m^3/h	~~*1704*~~ **2300**
Design pressure, MPaG	*~ 4.81*
Condensate Polishers	
Polisher type	*Bead resin, mixed bed*
Number of vessels	*6 (5 operat., 1 standby)**
Design flow rate per vessel, m^3/h	~ ~~1022~~ **1380**
Specific flow rate, $L/s/m^2$	*Normal: 0.234 (Max: 0.352)*
Design pressure, MPaG	*~ 4.81*

* *The number of demineralizers and filter vessels are dependent on the final Turbine Building design and are quoted here for reference purposes only.*

Table 10.4-5 Condensate and Feedwater System Design Data

Condensate Piping (Reactor Feedwater Pump Inlet Condition)	
Normal flowrate~~~~, kg/h*	~~*~3,803,850*~~ **~ 7629** x **10^3**
Number of lines	~~*3*~~ **4**
Nominal pipe size	~~*500A*~~ **550A**
Fluid velocity, ~~cm/s~~ **m/s**	~~*~396.24*~~ **~ 3.7**
Fluid temperature, °C	~~*157.22*~~ **158.5**
Design code	*ANSI B31.1*
Seismic design	*Analyzed for SSE design loads*
Main Feedwater Piping (No.6 Feedwater Heater Outlet Condition)	
Design (VWO) flowrate, kg/h	~~*~8,164,620*~~ **~ 7986** x **10^3**
Number of lines	*2*
Nominal pipe size	~~*550A*~~ **650A**
Fluid velocity, m/s	~~*~185.8*~~ **~ 4.7**
Fluid temperature, °C	~~*223.89*~~ **217.7**
Design code	*ANSI B31.1*
Seismic design	*Analyzed for SSE design loads*

~~* *Based on VWO feedwater flow and heater drain pump out of service.*~~

Table 10.4-6 Condensate and Feedwater System Component Failure Analysis

Component	Failure Effect On Train	Failure Effect on System	Failure Effect on RCS
Condensate pump	*None. Condenser hotwells and condensate pumps are interconnected.*	*Operation continues at full capacity,* **using parallel pumps and auto start of standby pump.** ~~*(condensate pump capacity is 50%).*~~	*None*
Condensate Booster Pump	**None. Suction line and condensate booster pumps are interconnected.**	**Operation continues at full capacity, using parallel pumps and auto start of the standby condensate booster pump.**	**None**
No.1, 2, 3 or 4 feedwater heater	*One train of No. 1, 2, 3 and 4 feedwater heaters is shut down. Remaining trains continue to operate.*	*Operation continues at reduced capacity, using parallel feedwater heaters. Load must not exceed turbine vendor's requirements to protect the LP turbines from excessive steam flow.*	*Reactor control system reduces reactor power to a level compatible to the safe LP turbine operation.*

Table 10.4-6 Condensate and Feedwater System Component Failure Analysis (Continued)

Component	Failure Effect On Train	Failure Effect on System	Failure Effect on RCS
Heater drain tank	*Drains from affected heater drain subsystem are dumped to condenser.*	*~~50% of the h~~**H**igh pressure drains are dumped to condenser.*	*~~None. The condensate and drain systems are designed to permit operation with normal full reactor power, feedwater temperature, and flow rate.~~* **Reactor control system reduces reactor power to a level compatible with the condensate and feedwater capacity.**
Heater drain pump	*~~Drains from affected heater drain subsystem are dumped to condenser.~~* **None**	*~~50% of HP feedwater heater drains are dumped to condenser.~~***Operation continues at full capacity with auto start of standby pump.**	*None. ~~The condensate and drain systems are designed to permit operation with normal full reactor power, feedwater temperature, and flow rate.~~*
Reactor feedwater pump	*None. Feedwater pumps are interconnected.*	*Operations~~ may~~ continue at full capacity~~, using 2 parallel pumps. Each reactor feedwater pump capacity is 65%~~* **with auto start of standby pump.**	*None*
No. 5 or 6 feedwater heater	*One train is shut down.*	*CFS operation continues at capacity, using parallel train and bypass line.*	*Reactor control system adjusts the reactor to permit continued operation with the reduced feedwater temperature.*

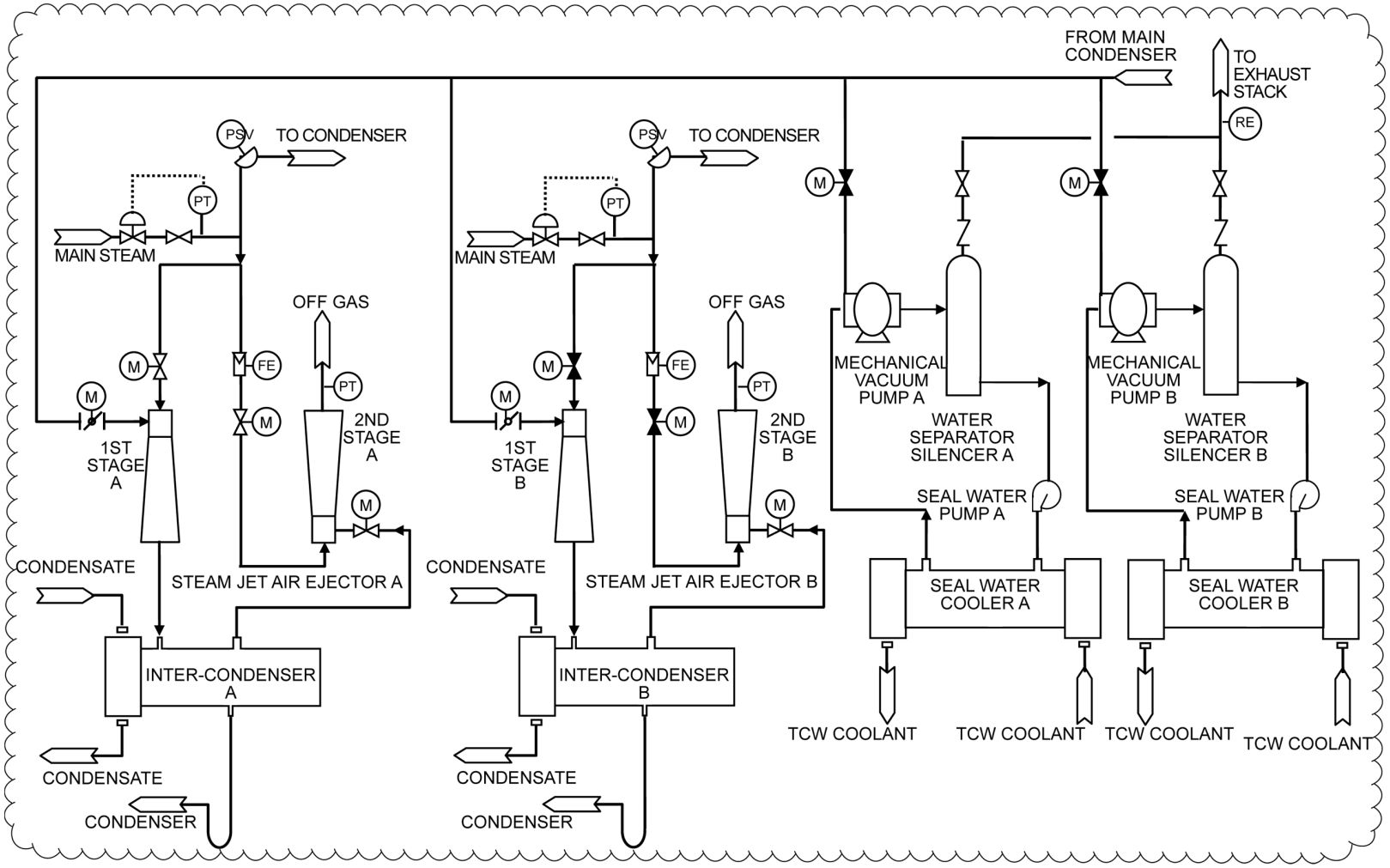

Figure 10.4-1 Main Condenser Evacuation System

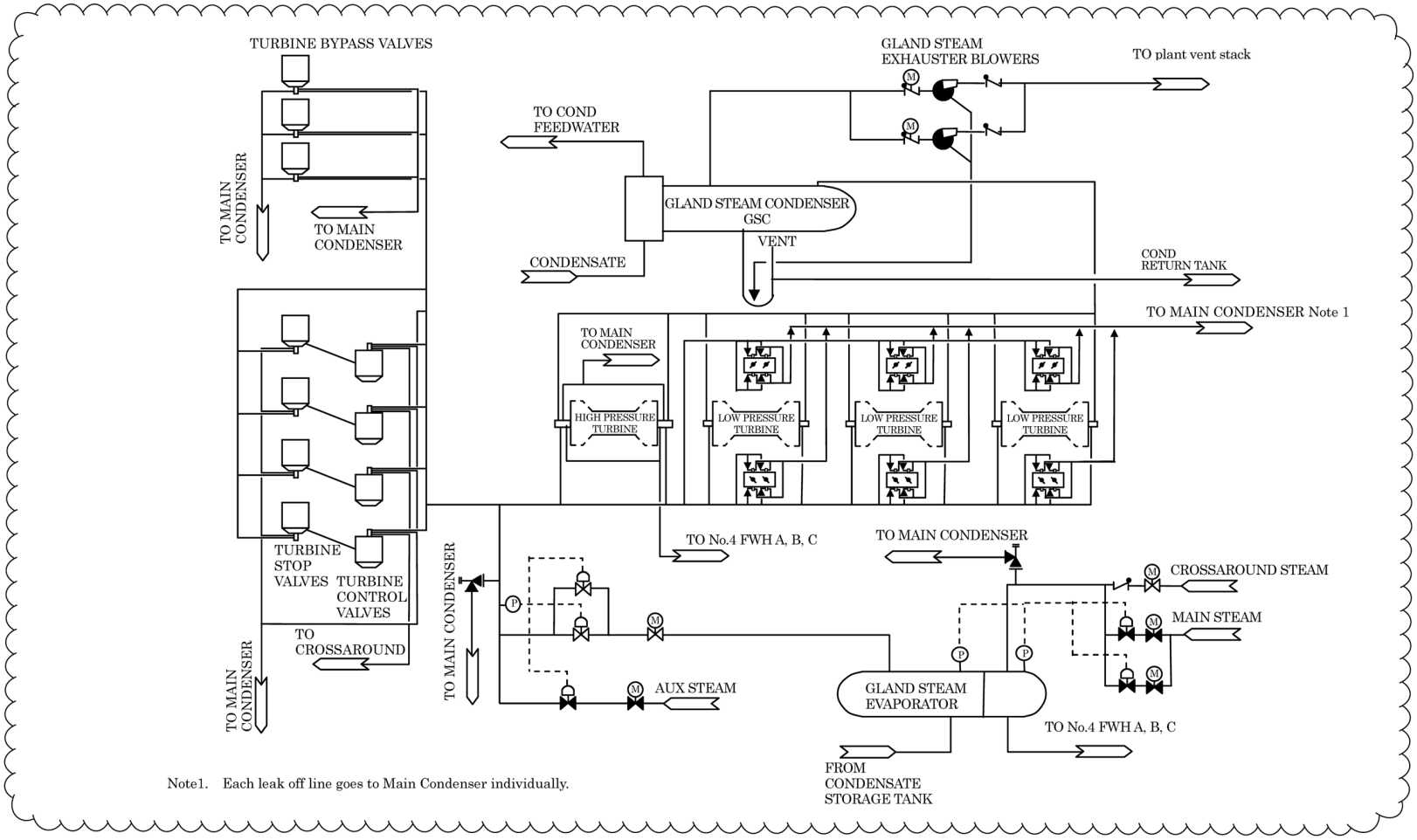

Figure 10.4-2 Turbine Gland Seal System

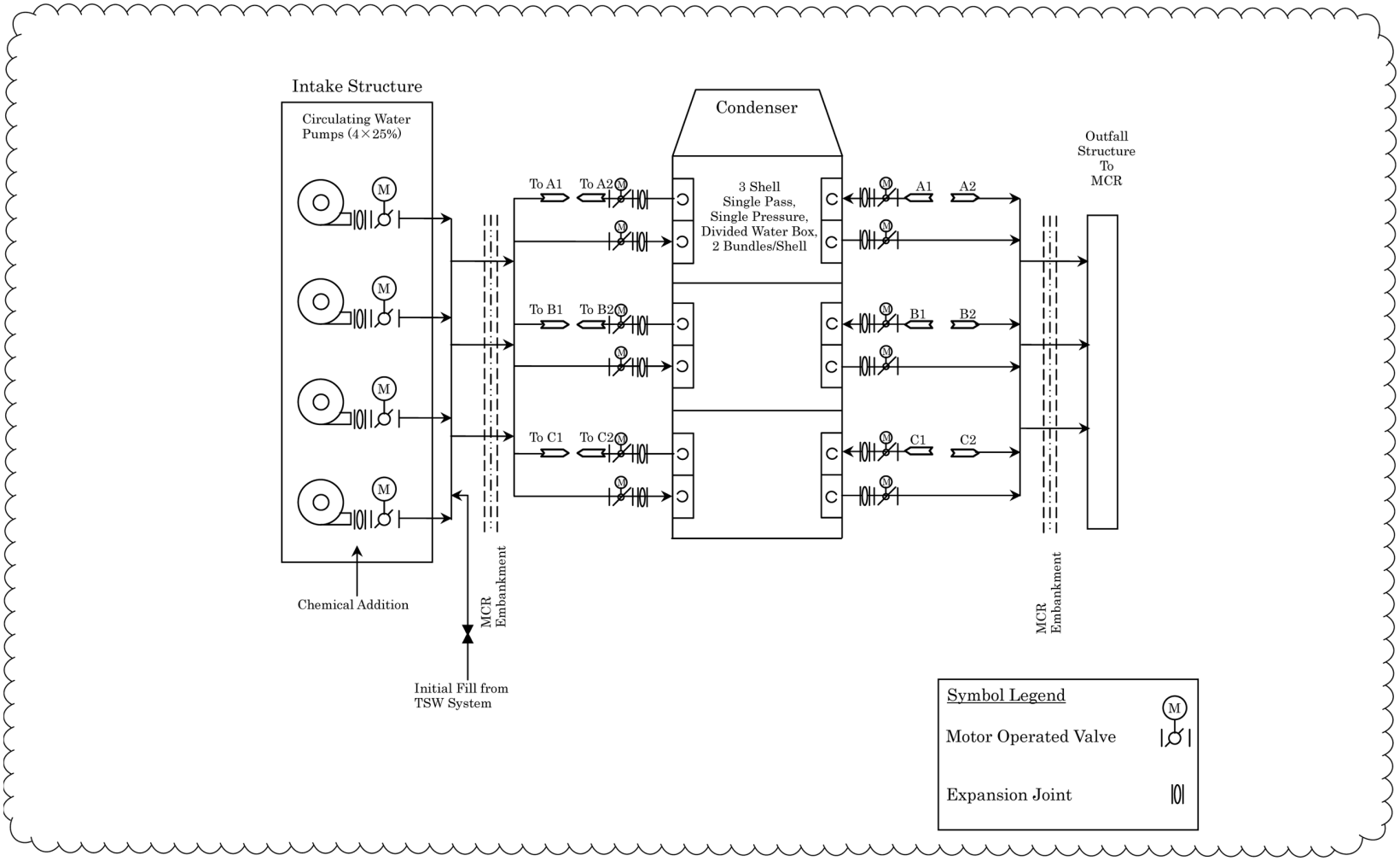

Figure 10.4-3 Circulating Water System

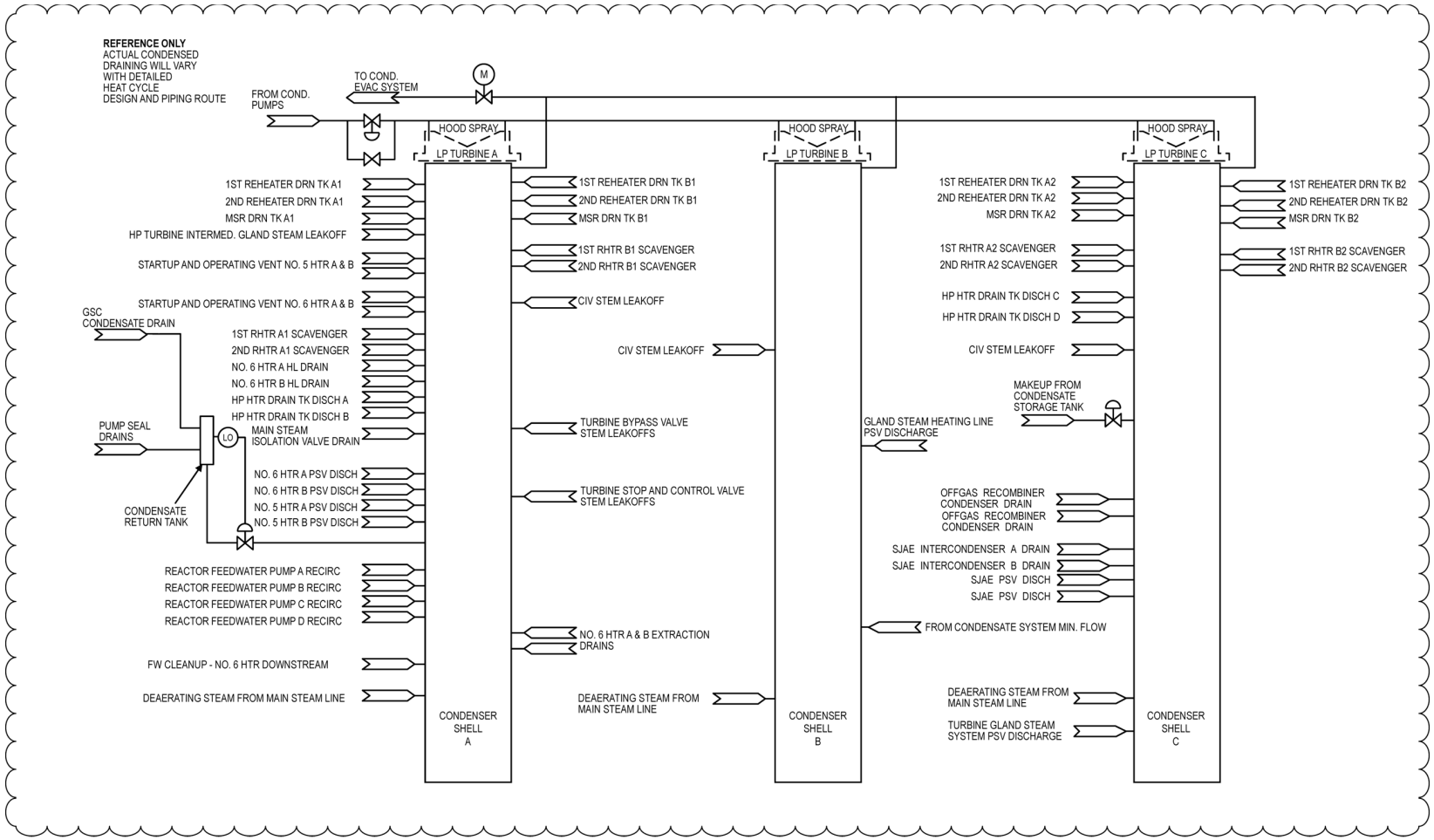

Figure 10.4-5 Condensate System

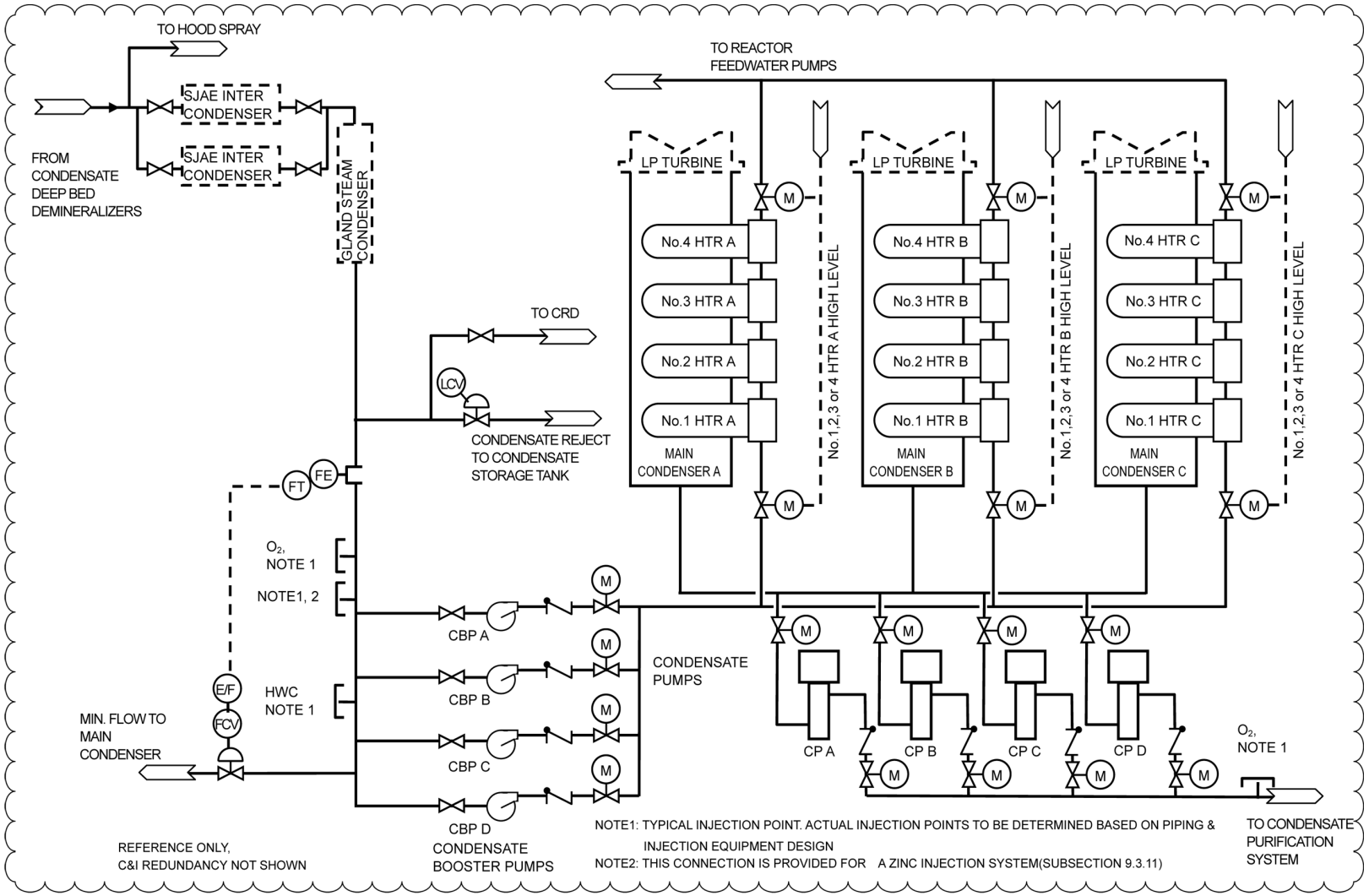

Figure 10.4-5 Condensate System (Continued)

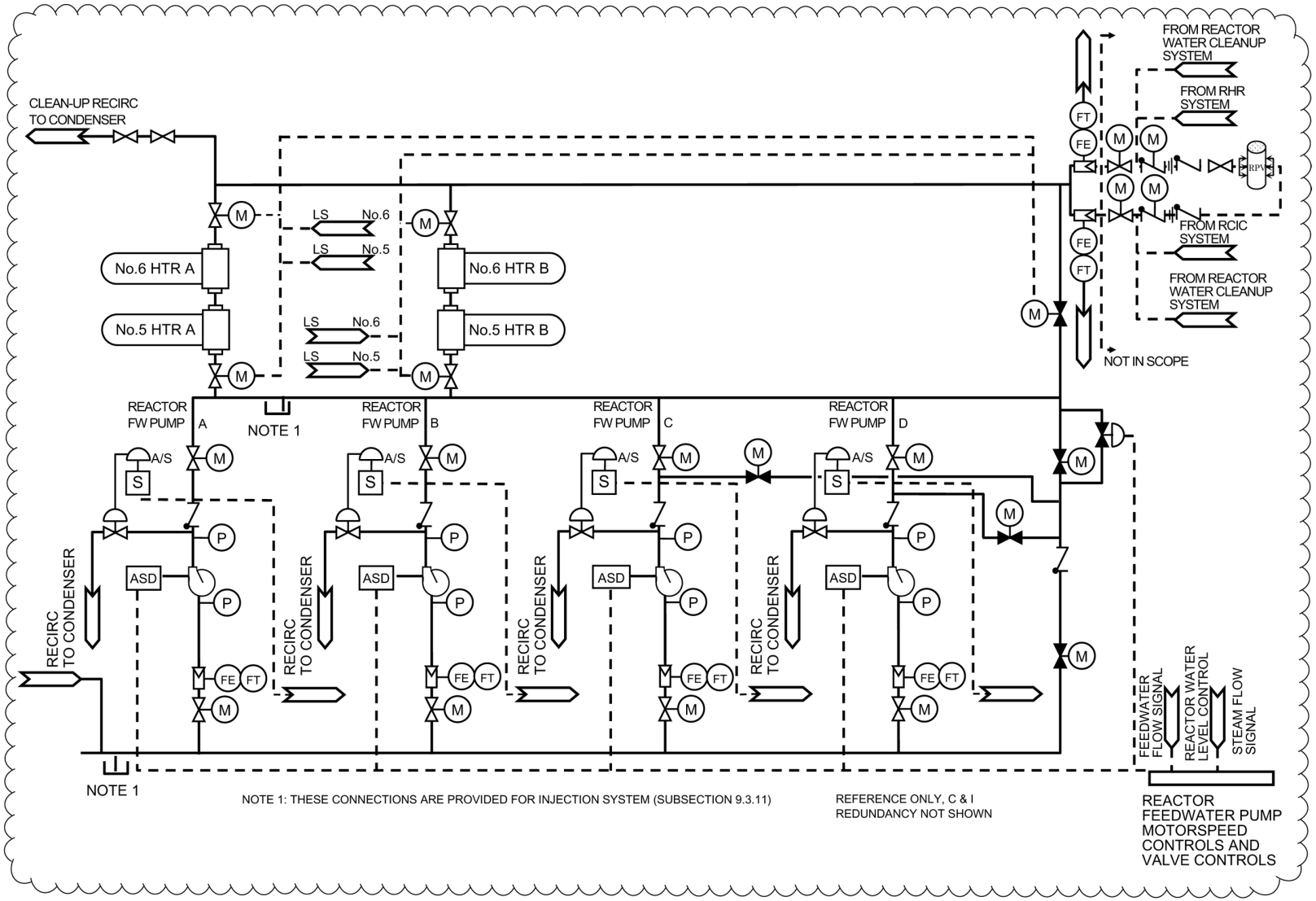

Figure 10.4-6 Feedwater System

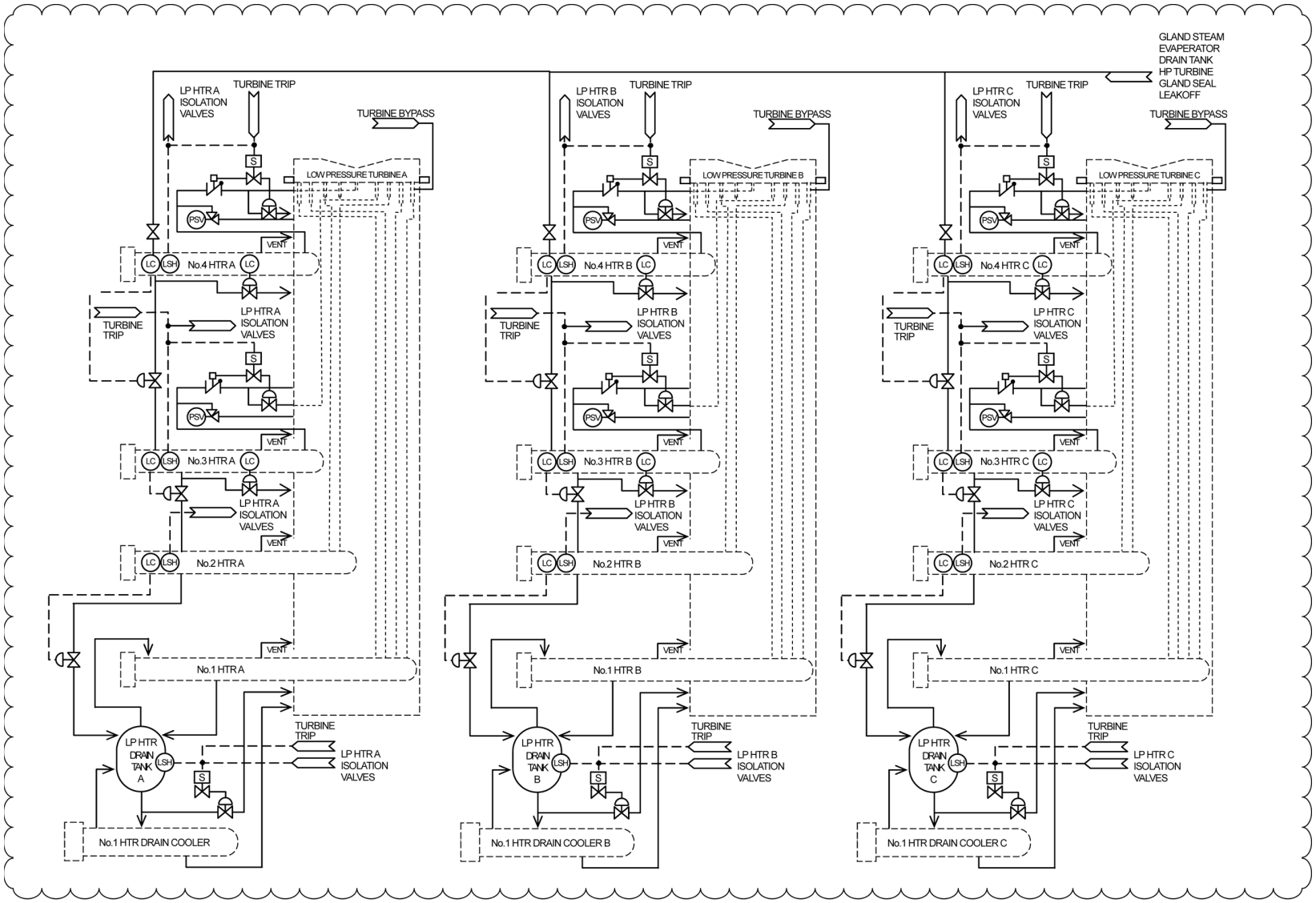

Figure 10.4-7 LP Extraction Steam Drains and Vent System

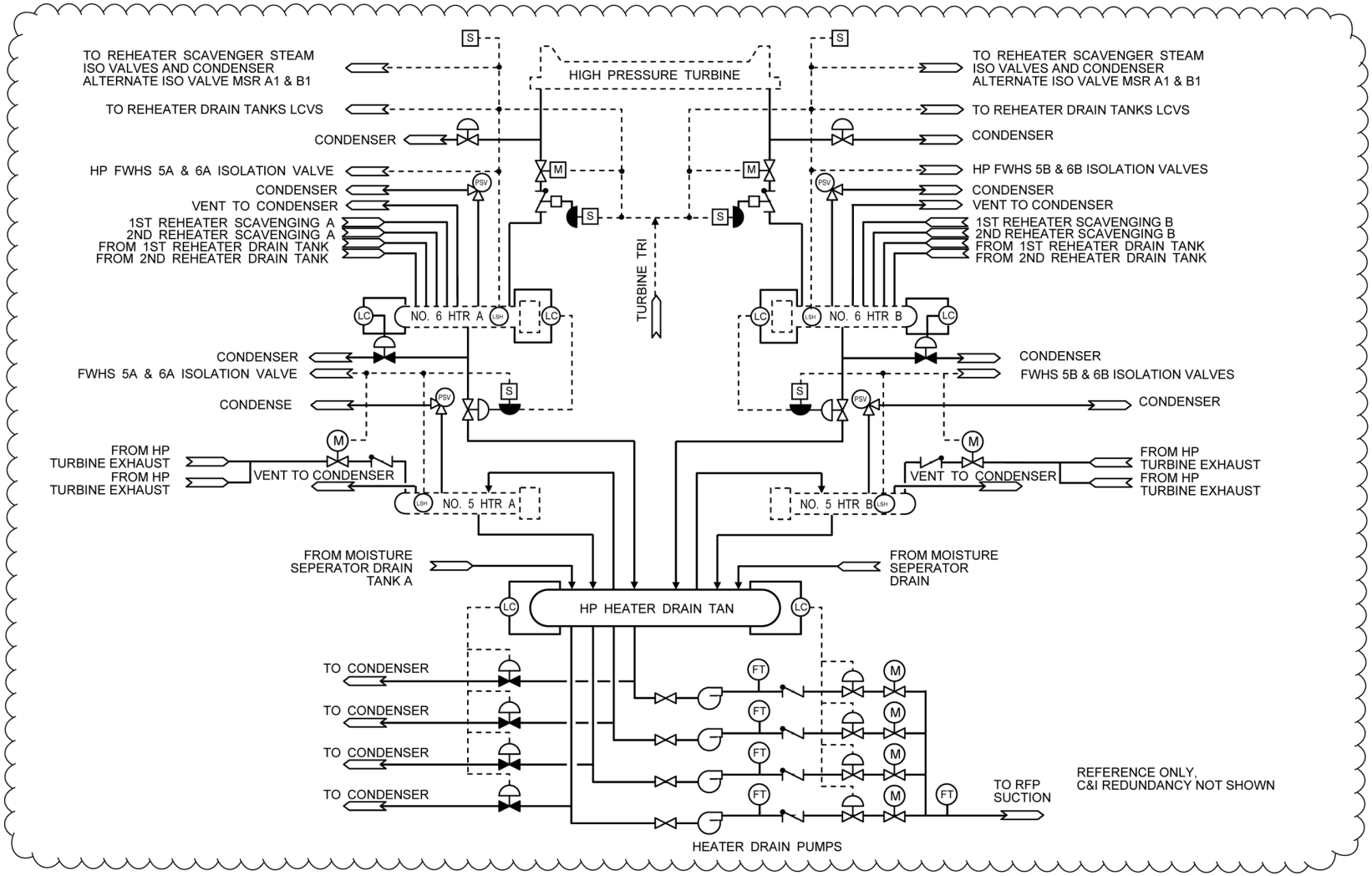

Figure 10.4-8 Extraction Steam Drains and Vent System

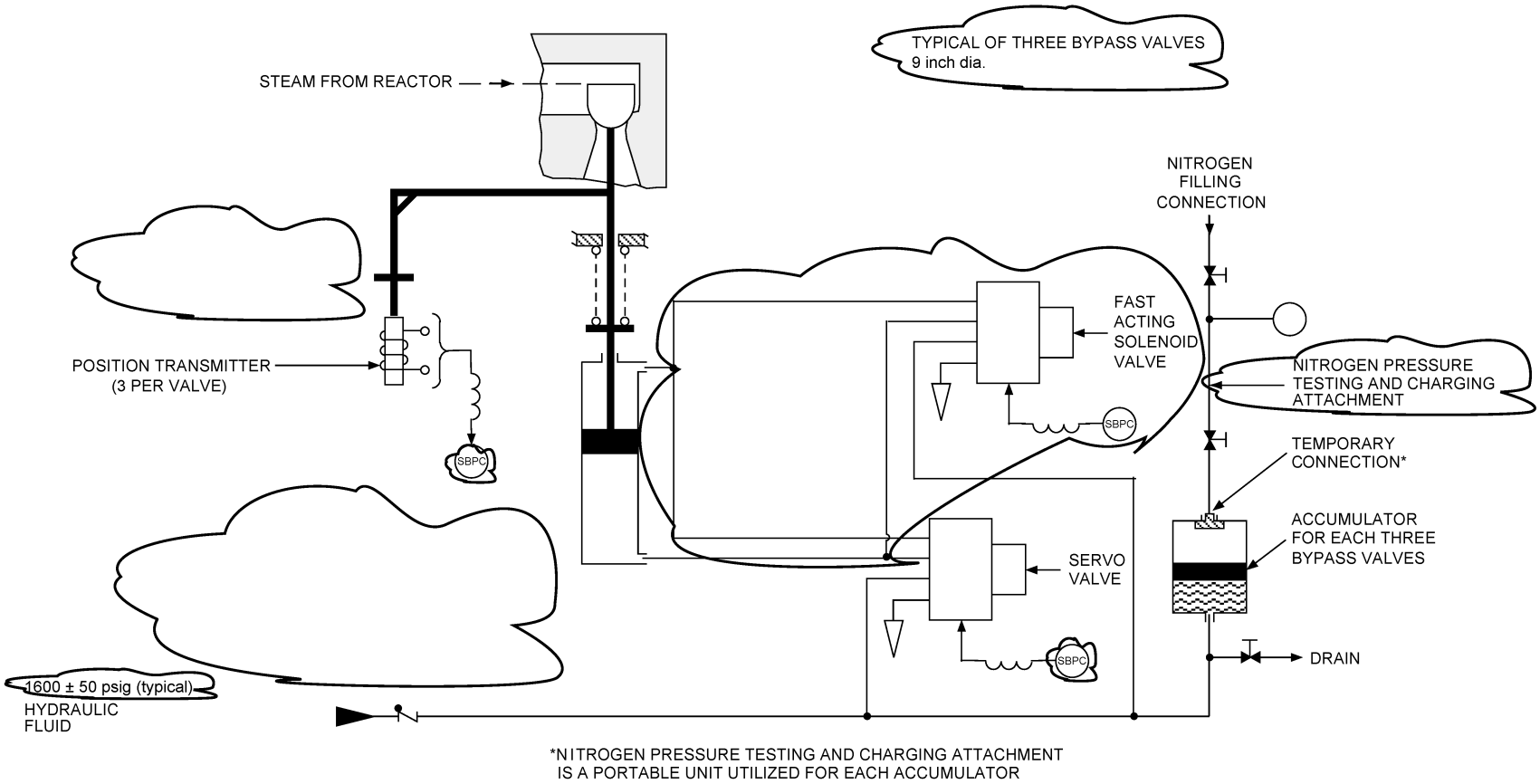

Figure 10.4-9 Bypass Valve Control, Electro-Hydraulic Control Unit