## 9.2 Water Systems

The information in this section of the reference ABWR DCD, including all subsections, tables, and figures, is incorporated by reference with the following departures and supplements:

STP DEP 1.1-2

STD DEP 1.8-1

STD DEP T1 2.14-1 (Table 9.2-4b, Table 9.2-4c, Figure 9.2-1, Figure 9.2-5)

STD DEP 9.2-1 (Table 9.2-4d)

STP DEP 9.2-2 (Table 9.2-15, Figure 9.2-10)

STP DEP 9.2-3 (Table 9.2-11, Figures 9.2-6a, 9.2-6b and 9.2-6c)

STP DEP 9.2-5 (Table 9.2-13, Figure 9.2-7)

STD DEP 9.2-7 (Table 9.2-6, Table 9.2-7, and Figure 9.2-2)

STP DEP 9.2-8 (Table 9.2-14 and Figure 9.2-9 Sheet 1 of 2)

STD DEP 9.2-9 (Table 9.2-6 and 9.2-7)

STP DEP 9.2-10 (Table 9.2-16, Figure 9.2-8)

STD DEP 9.4-4 (Table 9.2-7)

STD DEP 9.4-7 (Table 9.2-7)

STP DEP 9.4-8 (Table 9.2-7)

STD DEP Admin (Figure 9.2-4)

STD DEP Admin (Table 9.2-11, Figure 9.2-6b)

### 9.2.4 Potable and Sanitary Water System

#### 9.2.4.2 Portions Outside the Scope of ABWR Standard Plant

The conceptual design information in this subsection of the reference ABWR DCD is replaced with the following site-specific departures and supplements:

##### 9.2.4.2.2 Power Generation Design Bases (Interface Requirements)

STP DEP 9.2-8

(1) *The PSW System is designed to provide to all buildings* at STP 3 & 4 *a minimum of* ~~*45 m³/h*~~ 90 $m^3$/h *of potable water* intermittently *during peak demands.*

(2) *Potable water* will be supplied directly off of the well water system and *is* ~~*filtered and*~~ chemically *treated to prevent harmful physiological effects on plant personnel.*

(3) *The PSW System includes a sanitary drainage system* for all four units at the STP site *which is designed to collect liquid wastes and entrained solids discharged by all plumbing fixtures located in areas with no sources of potentially radioactive wastes and conveys them to a sewage treatment facility.*

(4) The PSW System includes a sewage treatment system which treats sanitary waste for all four units at the STP site using the activated sludge biological treatment process. The aeration tanks are capable of receiving waste at a rate ~~*between 45 m³/d and 185*~~ of 1136 *$m^3$/d.*

(6) The emergency eyewash and shower stations require the use of tepid water.

(7) The system supply pressure is regulated to ensure that no plumbing fixture or equipment connection is subjected to a pressure greater than 60 psig (43 m) under normal operating conditions.

(8) The Potable Water System is shared between STP 3 & 4; the Sewage Treatment System (STS) is shared between all four units at the STP site.

### 9.2.4.2.3 System Description

The PSW system includes a potable water system, a sanitary drainage system, and a sewage treatment system. The PSW system is designed and installed in accordance with the International Plumbing Code 2003, and all state and local codes, as applicable.

The portions of the PSW system outside of the ABWR Standard Plant are shown on Figure 9.2-9.

#### 9.2.4.2.3.1 Potable Water System

The potable water system is shared between STP 3 & 4. Raw water is pumped from groundwater wells into the potable water storage tank. A hypochlorite injection pump and tank are provided to inject sodium hypochlorite to the water entering the potable water storage tank. Potable water pumps send water from the potable water storage tank to a distribution system. A hydropneumatic pressure tank and an air compressor (or air receiver tank) are provided to maintain adequate pressure within the potable water distribution piping system. Potable water used for hot water service is sent to a heater where it is heated and distributed throughout the plant.

#### 9.2.4.2.3.2 Sanitary Drainage System

The sanitary drainage system collects liquid and solid wastes and conveys them to the STS.

#### 9.2.4.2.3.3 Sewage Treatment System

The sewage treatment system (STS) is shared between all four units at the STP site. The STS is a structure containing several compartments that uses the activated sludge biological treatment process. The STS includes a comminutor with a bypass screen channel, aeration tanks, final clarifiers, a chlorine contact tank, aerobic digesters, air blowers, a froth spray pump, a hypochlorite pump, and related equipment. The system can be operated in two modes: extended aeration and contact stabilization.

### 9.2.4.2.4 System Operation

#### 9.2.4.2.4.1 Normal Operation

The design and construction of the potable water supply includes facilities for metering, storage, pressure maintenance, pumping, and disinfection. The design and construction will meet all state requirements for a designated noncommunity, non-transient potable water supply. The potable water pumps take water from the potable water storage tank and discharge it to the distribution system. Maintenance of working pressure in the system will be provided with a hydropneumatic pressure tank. Under automatic control, a low-pressure switch starts one of the potable water pumps when the hydropneumatic pressure tank water pressure falls below a specified limit. A pressure switch automatically starts a second potable water pump when a single pump is unable to maintain the tank pressure above a specified limit. When the water level reaches a specified high level in the hydropneumatic pressure tank, a level switch automatically stops the potable water pumps. If high water level in the pressure tank is reached and the tank pressure is low, the air compressor is automatically started and is stopped at a specified pressure by a high-pressure switch.

Normally, the STS is operated in the extended aeration mode. The sanitary wastes enter the STS via the comminutor, in which any solids are shredded, and flows into the aeration tanks. In the aeration tanks, the waste liquids are continuously aerated. Foaming occasionally occurs in the aeration tanks. A froth spray system is provided that uses processed sewage to control any froth that is present. The aeration tank contents are then transferred to the clarifiers where the sludge is allowed to settle. The clarified sewage passes into the chlorine contact tank for chlorination before being discharged to the Main Cooling Reservoir (MCR). The settled sludge is sent to the aerobic digesters and disposed of by land application on the STP site in accordance with the permit to land-apply sewage sludge or dewatered and shipped offsite for disposal.

#### 9.2.4.2.4.2 Abnormal Operation

The components of the PSW system are designed to meet the increased needs during refueling operations when additional personnel are onsite.

The STS may be operated in the contact stabilization mode to process the substantially higher wastewater flow rates during outages. In this mode, a portion of the settled sludge from the final clarifiers is aerated, sent to the aeration tanks, and mixed with incoming sewage.

#### 9.2.4.2.5 Evaluation of Potable and Sanitary Water System Performance (Interface Requirements)

The following site-specific supplement addresses the COL License Information Item in this subsection:

The PSW system includes a potable water system, a sanitary drainage system, and a sewage treatment system. The PSW system is designed and installed in accordance with the International Plumbing Code 2003, and all state and local codes, as applicable.

The PSW system will be designed with no interconnections with systems having the potential for containing radioactive materials. Protection will be provided through the use of air gaps, where necessary.

### 9.2.5 Ultimate Heat Sink

The conceptual design information in this subsection of the reference ABWR DCD, including all subsections, tables, and figures, is replaced with the following supplements. In addition, supplemental information is added to address Interface Requirements.

#### 9.2.5.1 Safety Design Bases (Interface Requirements)

*(1) The ultimate heat sink (UHS) is designed to provide sufficient cooling water to the Reactor Service Water (RSW) system to permit safe shutdown and cooldown of the unit and maintain the unit in a safe shutdown condition. The RSW water temperature at the inlet to the ~~Reactor Cooling Water (~~RCW~~)~~/RSW heat exchangers is not to exceed 35°C during a ~~loss of coolant accident (~~LOCA~~)~~* (GDC 44).

*(2) In the event of an accident, the UHS is designed to provide sufficient cooling water to the RSW system to safely dissipate the heat for that accident. The amount of heat to be removed is provided in Tables 9.2-4a, 9.2-4b, and 9.2-4c* (GDC 44).

*(3) The UHS is sized so that makeup water is not required for at least 30 days following an accident and design basis temperature and chemistry limits for safety-related equipment are not exceeded.*

*(4) The UHS is designed to perform its safety function during periods of adverse site conditions, resulting in maximum water consumption and minimum cooling capability.*

(5) *The UHS is designed to withstand the most severe natural phenomenon or site-related event (e.g., SSE, tornado, hurricane, flood, freezing, spraying pipe whip, jet forces, missiles, fire, failure of non-Seismic Category I equipment, flooding as a result of pipe failures or transportation accident), and reasonably probable combinations of less severe phenomena and/or events, without impairing its safety function* (GDC 2 and 4).

*(6) The safety-related portion of the UHS is designed to perform its required cooling function assuming a single active failure in any mechanical or electrical system.*

*(7) The UHS is designed to withstand any credible single failure of man-made structural features without impairing its safety function.*

*(8) All safety-related heat rejection systems are redundant so that the essential cooling function can be performed even with the complete loss of one division. Single failures of passive components in electrical systems may lead to the loss of the affected pump, valve, or other components and the partial or complete loss of cooling capability of that division but not of other divisions.*

*(9) The UHS and any pumps, fans, valves, structures, or other components that remove heat from safety systems are designed to Seismic Category I and ASME Code, Section III, Class 3, Quality Assurance B, Quality Group C, IEEE-379,* IEEE-603*, and IEEE-308 requirements.*

*(10) The safety-related portions of the UHS shall be mechanically and electrically separated.* The UHS is arranged in three divisions. Active components within each division are powered by their respective Class 1E divisions. Each division is physically separated and electrically independent of the other divisions.

*(11) The UHS is designed to include the capability for full operational inspection and testing.*

(12) In the event of loss of preferred power source, the UHS is designed to be powered by the onsite emergency power system.

(13) UHS System Divisions A and B components have control interfaces with the Remote Shutdown System (RSS) as required to support UHS operation during RSS design basis conditions.

### 9.2.5.2 Power Generation Design Bases (Interface Requirements)

*The UHS is designed to remove the heat load of the RSW system during all phases of normal plant operation. These heat loads are provided in Tables 9.2-4a, 9.2-4b, and 9.2-4c. However, it is not a requirement that the UHS temperature be assumed to be the maximum temperature for all operating modes during normal plant operations.*

### 9.2.5.3 System Description

Each unit has its own UHS water storage basin. Above the basin is a counterflow mechanically induced draft cooling tower with six cooling tower cells, of which two cells are dedicated to each of the three RSW divisions to remove heat from their respective RCW/RSW division. (See Figures 1.2-34 through 1.2-36)

#### 9.2.5.3.1 General Description

The UHS is a highly reliable, Seismic Category I structure that provides an adequate source of cooling water that is available at all times for reactor operation, shutdown cooling, and accident mitigation. The RSW is pumped from the UHS water storage basin to the RCW heat exchangers for removal of heat. The heated water is returned to the mechanical-induced draft cooling tower where the heat is dissipated to the atmosphere by evaporation and conduction (see P&ID Figure 9.2-7, sheets 1 to 3).

The design of the RSW pump house, cooling tower, and UHS basin allows periodic inspections of components (pumps, fans, cooling tower cells, strainers, valves, and piping) to ensure system integrity and capability as required by GDC 45.

The design of the UHS system meets the requirements of GDC 46 by allowing appropriate periodic pressure and functional testing of structural and leak-tight integrity of its components, the operability and the performance of the system active components, and the operability of the system as a whole. It also allows testing, under conditions as close to the design as practical, the performance of the full operational sequence that brings the system into operation for reactor shutdown and for LOCAs, including operation of portions of the protection system and transfer between normal and emergency power sources.

#### 9.2.5.3.2 UHS Water Storage Basin

A UHS water storage basin is dedicated for each unit with no cross ties between units.

The UHS water storage basin is a Seismic Category I concrete structure built partially below grade and sized for a water volume sufficient to meet the cooling requirements for 30 days following a design basis accident (DBA) with no makeup water and without exceeding the design basis temperature and chemistry limits. The UHS basin at the low-low level holds 60,950,049 kilograms of water to meet the unit cooling needs for 30 days following a postulated LOCA with no makeup.

#### 9.2.5.3.3 RSW Pump House

The RSW pump house is contiguous with the UHS water storage basin and houses the RSW pumps and associated piping and valves (Subsection 9.2.15). The RSW pump house is partially below grade and is integral with the UHS water storage basin structure. Each division's RSW pumps are located in a separate pump room.

The electrical equipment room of each division is located in the RSW pump house above the respective RSW pump room.

HVAC equipment maintains suitable room conditions for proper operation of the RSW pumps and electrical equipment as described below:

- Ventilation of the RSW pump rooms is provided by a dedicated, thermostatically controlled ventilation system that removes the heat generated by the RSW pump motor and other equipment in the RSW pump rooms. The system for each pump room is comprised of one 100% capacity supply fan, ductwork, intake damper, and return air damper. A space thermostat controls the dampers to maintain the room temperature between 18°C and 50°C. The ventilation inlet/exhaust openings in the RSW pump house structure are protected against tornado-generated missiles (see Figures 1.2-35 and 1.2-36).
- The RSW pump rooms are heated by thermostatically controlled electric unit heaters sized to maintain the minimum design winter temperature.
- The air temperature in the electrical equipment rooms associated with the RSW pump house is controlled by the HVAC packaged air conditioning unit in each room. RSW is used to cool the water-cooled condenser of each air conditioning unit (see Subsection 9.2.15). The RSW used for cooling is returned to the UHS basin.

#### 9.2.5.3.4 System Components

The RSW supply and return lines are routed through a divisionally separated tunnel (see Appendix 3H.6).

The cooling tower is contiguous with the UHS structure. Each cooling tower is a counterflow mechanically induced draft cooling tower with six cooling tower cells, of which two cells are dedicated to each of the three RSW divisions. During normal plant operation, all three divisions are in operation with one cooling tower cell per division. When the heat load is increased during cooldown, shutdown, or accident, all cooling tower cells are in operation.

The cooling tower internals are protected from effects of tornado generated missiles (see Appendix 3H.6). The cooling tower riser and distribution system sprays the heated water over the area of the tower fill. The cooling tower spray nozzles are of corrosion-resistant materials and designed to provide the required thermal performance while minimizing drift loss. The system is designed so that the pressure drop across the nozzles for proper spray performance is achieved for all anticipated modes of RSW system operation. The nozzles are designed to be resistant to clogging.

Mechanical-induced draft fans provide airflow to cool the water droplets as they fall through the tower fill, rejecting heat from the reactor service water to the air. The induced draft fans draw air through the openings on the north and south sides of the cell and the heated air exits from the top of cooling tower cell. Drift eliminators are located between the water distribution system and the fan. Each cooling tower cell is sized for an RSW flow rate of 3240 $m^3$/h. The cooling tower cells are supported by beams spanning along the east-west axis and columns from the UHS water storage basin floor.

Cold weather bypass lines are provided for each RSW return line to allow bypassing the cooling tower dedicated cells when the outside temperature is low and cooling tower operation is not required. The heated water from the RSW return line is discharged directly into the UHS water storage basin above the water surface.

The STP well water is the primary source of the makeup water to the UHS water storage basin. A makeup water valve controlled by level instrumentation in the UHS water storage basin is provided to maintain proper water level. The makeup water valve can also be operated remotely to maintain the desired water level or quality. The MCR is the backup source of makeup for the UHS basin.

Blowdown from the UHS water storage basin is used to remove excess water from precipitation and maintain water storage basin water quality. Blowdown is taken from each RSW pump discharge line (see Subsection 9.2.15 and P&ID Figure 9.2-7).

### 9.2.5.4 System Operation

#### 9.2.5.4.1 Normal Operation

Normally, the RSW system has one pump per division in operation. Return water from each RSW division is sent to the UHS basin where it is routed to the respective RSW division cooling tower cell. The operators may alternate the operating RSW pump and the UHS cooling tower cell when desired. During normal shutdown and emergency cooling modes, the second RSW pump and the second cooling tower cell in each division are placed into service. Each RSW pump is provided with a self-cleaning strainer. The self-cleaning strainer operation is controlled by the pressure drop across the strainer inlet/discharge. The strainer discharge line is connected to the blowdown line when makeup water is available or to the UHS basin when no makeup water is available.

The UHS design is based on three cycles of concentration of the water composition in the UHS basin during normal operation. The primary source of makeup water is well water. Chemicals are added to control corrosion, scaling, and biological growth in the UHS. Sulfuric acid will be added for scale control as well as other chemicals such as a corrosion inhibitor, scale inhibitor, and dispersant. A hypochlorite or alternative biocides feed system is provided to inhibit biological growth in the UHS water storage basin. The chemicals are added to the UHS water storage basin as needed based on sampling and analysis.

Operation of the UHS water storage basin without blowdown would increase the concentration of scale-forming constituents in the water because of evaporation. Also, biofouling may occur under some conditions. However, sufficient water inventory is provided in the UHS water storage basin to prevent scale-producing agents, such as calcium sulfate, from reaching elevated concentrations that could cause significant scaling during the 30-day post-accident period when makeup and blowdown are assumed to be unavailable.

#### 9.2.5.4.2 Cold Weather Operation

The cooling tower is designed to perform its cooling function during cold weather operation using the cooling tower bypass. Ice formation in the basin is not expected to occur because the system is in service during all operating modes and the climate of the site is temperate. During cold weather conditions, the RSW system return flow to the cooling tower is isolated and the lines downstream of the isolation valves are drained. The cold weather bypass lines direct the warm water to the basin and discharge above the water surface to circulate and mix with the water in the basin. Any ice layer present on the basin surface will melt.

### 9.2.5.5 UHS Thermal Performance

#### 9.2.5.5.1 Design Meteorology

Conservative site-specific design meteorological data was developed in accordance with the requirements of US NRC RG 1.27. The meteorological database used to determine the worst 1-day and 30-day meteorological data for STP 3 & 4 UHS analysis was 45 years of hourly surface weather data from Victoria, Texas, obtained from National Climatic Data Center (1961 to 1990 in SAMSON format and 1991 to 2005 in TD-3280 format). A 45-year record from Victoria, Texas meteorological data is representative of the site for the UHS analysis. For comparison to the use of the Victoria data, 18 years of recent meteorological data for (1988 to 2005) Palacios, Texas, obtained from the National Climactic Data Center was evaluated. Results using this limited number of years of Palacios data demonstrated that water usage is bounded by the analysis results using the Victoria data and the UHS maximum water temperature, although slightly higher than with the Victoria data, would remain below the design limit cold water temperature of 35 °C (95 °F).

##### 9.2.5.5.1.1 Conditions That Maximize Water Temperature

The cooling tower is capable of dissipating the design basis heat loads under environmental conditions that minimize heat dissipation without exceeding the design limit cold water supply temperature of 35°C (95°F). The worst 1-day (24-hour) meteorological conditions for UHS basin water maximum temperature are found by using the meteorological data conversion and extraction program to screen the aforementioned meteorological database. The UHS basin water maximum temperature results from the 1-day (24-hour) meteorological data between September 16, 1996 and September 17, 1996 (see Table 9.2.-23a). The maximum expected temperature is 33.1°C in accordance with Table 9.2-24.

##### 9.2.5.5.1.2 Conditions That Maximize Water Usage

To determine the required size of the cooling tower storage basin, water use must be determined for a 30-day period following a normal or LOCA shutdown, assuming all sources of makeup water are lost.

The worst 30-day meteorological conditions for maximum water usage are found by using the meteorological data conversion and extraction program to screen the aforementioned meteorological database. The maximum water usage results from the

30-day (720 hours) meteorological data between July 09, 1982 and August 07, 1982 (see Table 9.2-23b).

### 9.2.5.5.2 UHS Water Storage Basin Requirements

The size of the UHS basin is based on the 30-day cumulative evaporation for the worst-case meteorological conditions using the reactor decay heat and other essential loads related to the RCW/RSW systems as shown in Tables 9.2-4a, 9.2-4b, and 9.2-4c.

The UHS water storage basin design volume is based on UHS thermal performance analysis taking into account the following data:

(1) Evaporation Due to Plant Heat Load

The STP 3 & 4 UHS basin water evaporation is determined conservatively based on the plant heat loads for a 30-day DBA. Two UHS cases with different division alignments (and hence different plant heat loads as identified in Table 9.2.-19) are considered:

– Case D1: 30-day basin inventory case (Figure 9.2-11 and 9.2-16):

- Day 1-2: 3 RCW/RSW divisions, 2 RSW, 2 RCW pumps and 2 CT cells per division
- Day 3-30: Divisions A and B, 1 RSW, 1 RCW pump and 1 CT cell per division

– Case D2: 30-day basin inventory case (Figure 9.2-12 and 9.2-17):

- Day 1-2: 3 RCW/RSW divisions, 2 RSW, 2 RCW pumps and 2 CT cells per division
- Day 3-30: Divisions A and B, 2 RSW, 2 RCW pumps and 2 CT cells per division

The STP 3 & 4 UHS basin water evaporations for cases D1 and D2 are plotted in Figures 9.2-13 and 9.2-14. The total amount of water evaporated over 30 days are $5.12 \times 10^7$ kilograms (Table 9.2-25) and $5.56 \times 10^7$ kilograms (Table 9.2-26), respectively.

(2) Natural Evaporation

Bechtel Standard Computer Program GFULMIX (MAP152) is used to provide estimates of cooling pond evaporation and temperature response to imposed heat loads. Meteorology and heat load data is input at specified time points and the pond temperature, evaporation, and volume are output at specified time increments. The Victoria, Texas 30-day meteorological data from July 9, 1982 to August 7, 1982 (in SAMSON format) produces the worst 30-day period for cooling tower water evaporation. The initial UHS basin water temperature is assumed at 32.2°C.

For an average daily wind speed of 4.47 m/s, the natural evaporation losses for the 30-day period are about 8.62 x $10^5$ kilograms per unit.

(3) Drift Losses

The drift rate for the drift eliminator (based on an assumed 2-inches center-to-center Belgian wave form) is a function of the RSW flow rate to the cooling tower. In accordance with representative cooling tower vendor data, the drift rate is 0.005% of RSW flow rate to the cooling tower. During the 30-day operation following DBA, the water loss due to the drift represents 521,412 kilograms.

(4) Seepage

The seepage loss during the 30-day operation following DBA is 982,330 kilograms. The seepage rate through concrete structures is addressed in ACI 350R-89, Section 4.7.The seepage loss is within the acceptance criteria for the hydrostatic leak-tightness testing to be performed prior to backfilling (seepage loss of 0.1% per day based on the amount of water in the basin).

(5) Sedimentation

The bottom of the UHS water storage basin is provided with a 0.3 meter-tall curb to prevent sediment migration to the RSW pump. During normal operation, the water in the UHS basin will be maintained at three cycles of concentrations. At this number of cycles of concentration and considering the chemistry of the primary source of water (well water) with a low content of total suspended solids, precipitation of salts is not expected. During normal operation, the source of sediment is makeup water and dust from the atmosphere. Since the sediments could have an impact on the UHS water inventory, the UHS basin compartments are to be periodically inspected and cleaned as necessary. The backup source of makeup water (MCR) has a higher total suspended solid content but is not expected to be used on regular basis.

During the 30-day operation with no makeup following a DBA, no additional suspended solids will be added due to makeup water. By increasing the number of cycles of concentration, precipitation of salts occurs, but this does not affect the water inventory during a DBA.

(6) Water Quality

The same sources of makeup water that are used for the STP 1 & 2 Essential Cooling Pond are used for the STP 3 & 4 UHS. The primary source of makeup water to the UHS water storage basin is underground/well water, with the MCR as the backup source.

(7) Minimum Water Level for Operation

A perforated plate will be installed above the suction line intakes to prevent large debris from entering the system and preclude vortex formation during operation. The minimum water level in the UHS basin after 30-day operation following a DBA is set at 1.83 meters above the suction line's centerline.

(8) Pipe Crack

A single passive failure of the RSW piping is considered in the system. A crack is assumed with the leakage flow based on a circular orifice with flow area equal to one-half of the pipe outside diameter multiplied by one-half of the nominal wall thickness. The water loss is based on a 30 minute response time.

### 9.2.5.6 Evaluation of UHS Performance (Interface Requirements)

A system to transfer heat from structures, systems, and components important to safety to a UHS is provided. The system safety function is to transfer the combined heat load of these structures, systems, and components under normal operating and accident conditions.

Suitable redundancy in components and features, and suitable interconnections, leak detection, and isolation capabilities are provided to ensure that, for onsite electric power system operation (assuming offsite power is not available) and for offsite electric power system operation (assuming onsite power is not available), the system safety function can be accomplished, assuming a single failure.

The UHS cooling tower's thermal performance analysis has been performed to ensure that UHS system storage and cooling capacities are adequate for 30 days of cooling following a postulated LOCA without makeup or blowdown and that the cooling water temperature does not exceed the design limit for design basis heat input and site conditions.

The cooling tower cells are designed to remove the heat loads identified in Tables 9.2-4a, 9.2-4b, and 9.2-4c. During normal operation, only one cell is required to be in operation in each division at a flow rate of 3,240 $m^3$/h. During all the other modes of operation, initially two cells are required to be in service at flow rates of 4,860 $m^3$/h (2430 $m^3$/h per cell). The maximum airflow rate of each cooling tower fan is 1,587,839 $m^3$/h. Design temperature for cold water leaving the cooling tower is 35°C (the maximum acceptable water temperature at the RCW heat exchanger inlet). This corresponds to a maximum water temperature at the cooling tower inlet of 43°C.

The UHS cooling tower thermal performance analysis has determined the 30-day cumulative evaporation with the worst-case meteorological conditions for 30 consecutive days using the RCW/RSW loads as shown in Table 9.2-19 and Figures 9.2-11 and 9.2-12.

During normal operation, the anticipated maximum water temperature in the UHS water storage basin is 32.2°C.

The UHS estimated maximum water losses during the 30-day operation post-LOCA are for Case D2:

| | Loss for first 24 hours (kg) | Total Loss for 30 days (kg) |
|---|---|---|
| Forced Evaporation | 3,720,000 | 55,600,000 |
| Natural Evaporation | 28,735 | 862,000 |
| Drift | 17,380 | 521,412 |
| Seepage | 32,745 | 982,330 |
| Pipe Crack | 86,438 | 86,438 |
| Total | 3,885,298 | 58,052,180 |

## 9.2.5.7 Safety Evaluation (Interface Requirements)

### 9.2.5.7.1 Thermal Performance

The UHS is designed to reject the heat from the RCW/RSW systems without exceeding the maximum acceptable cold water temperature of 35°C during:

- Normal operation
- Emergency shutdown
- Normal shutdown
- Testing
- Standby
- Loss of preferred power

The heat loads that will be rejected by UHS are provided in Tables 9.2-4a, 9.2-4b, and 9.2-4c. Two out of the three mechanically and electrically separated divisions meet the plant safe shutdown requirements.

The analysis assumed that the UHS basin estimated water temperature at the beginning of LOCA is 32.2°C and the water inventory in the UHS water storage basin is 60,950,049 kilograms corresponding to the low-low level (elevation 23.55 meters MSL). At the end of the 30-day operation following a LOCA, if no makeup is available, the level in the UHS water storage basin will be at elevation 5.18 meters MSL and the total water inventory will decrease to 2,897,869 kilograms.

Cold water temperatures (Figure 9.2-15, 9.2-16, and 9.2-17) are determined using vendor-provided cooling tower performance curves that relate cold water temperature and wet-bulb temperature to the cooling tower range and cooling tower flow rate. The calculated cold water supply temperature after 30 days of operation following a DBA is 30.1°C for Case D1 and 28.6°C for Case D2.

### 9.2.5.7.2 Effects of Severe Natural Events or Site-Related Events

The SSE is the controlling seismic event. The UHS basin, including the RSW pump house, are partially below grade, Seismic Category I structures that can withstand the most severe natural phenomena expected, other site-related events, and reasonable combinations of less severe natural phenomena and/or site-related events.

The cooling tower protected structure is designed to withstand the SSE. The fill, drift eliminators, fans, and piping are seismically analyzed. The seismic analysis of structures is discussed in Appendix 3.H6.

Therefore, during an earthquake event, the UHS system is capable of fulfilling its safety function of safe shutdown and cooldown of the unit.

The cooling tower structure is designed to withstand design basis tornado and tornado effects, the controlling events for wind loading differential pressure, and wind-generated missiles. The components of the UHS system (basin, cooling tower, RSW pump house, and its ventilation inlets/outlets), are designed to withstand the effects of tornado winds' differential pressure and tornado-generated missiles without failure or loss of safety-related functions (Appendix 3H.6).

The MCR embankment breach is a potential single failure of a man-made structural feature. The UHS structure is designed to withstand the dynamic and hydrostatic forces caused by the flood wave propagating from the MCR for the duration of the postulated accident. The evaluation of this event for STP 3 & 4 is made in Section 2.4.

The UHS structures and the associated equipment are capable of withstanding the effects of a site flood and fulfilling their safety function (Section 3.4).

The UHS is sized to remain operational during a drought event under both emergency and normal plant operation. The primary source of makeup water to the UHS basin is well water and the backup source is the MCR. In the event the MCR level reaches minimum level, the units will be shut down since the condenser heat sink is not available. The volume of water in the UHS water storage basin and MCR is sufficient to allow shutdown and cooldown of the units and maintain them in safe shutdown condition.

The UHS is capable of withstanding the effects of a fire since:

- The UHS and RSW pump house are concrete structures provided with divisional separation and three-hour fire barriers.
- The cooling tower is a concrete structure with no combustible materials, except possibly for fan blades.

An explosion of a chemical truck located on nearby FM 521 and a gas well explosion have been considered as site-related events. The UHS structure is located well beyond the safe distance noted in Table 2.2S-q from FM 521. This Seismic Category

I concrete structure is designed to more severe conditions. This event is evaluated for STP 3 & 4 in FSAR Section 2.2.

### 9.2.5.7.3 Freezing Considerations

The UHS is designed for operations under any freezing conditions that may occur.

Valves and other components essential to operation of the UHS system are located inside the RSW pump house. These structures prevent rainwater or snow from impinging on the components of the system, thereby protecting them from freezing or icing. The UHS basin is partially below grade, such that ground temperature maintains the water temperature above freezing and the RSW pump suction is placed approximately 1.83 meters below the minimum water level in the UHS basin at the end of 30-day operation following a DBA. The UHS is designed with a provision to bypass the cooling tower during cold weather operation (see Subsection 9.2.5.4.2). Ice formation in the UHS water storage basin is not expected to occur since the system is in service during all operating modes of the reactor (normal, hot standby, normal shutdown, startup, loss of preferred power, and emergency shutdown) and the climate in the vicinity of the site is temperate (Section 2.3).

### 9.2.5.8 Conformance to RG 1.27 and 1.72 (Interface Requirements)

The UHS meets all applicable requirements of RG 1.27 since:

(1) The UHS is capable of providing sufficient cooling for at least 30 days

– To allow the simultaneous shutdown and cooldown of STP 3 & 4 and to maintain them in safe shutdown condition.

– In the event of an accident in one unit, the UHS is capable of safely shutting down the unit and limiting the effects of the accident. Each unit has a dedicated six-cell cooling tower and its own UHS water storage basin.

– Sufficient conservatism has been applied to ensure that a 30-day cooling period is available and the design basis temperatures of safety-related equipment are not exceeded.

– During the 30 days of operation following the DBA, actions will be taken to ensure the availability of makeup sources (onsite freshwater well system, MCR, or other) to extend the UHS operation as needed.

(2) The UHS is capable of withstanding, without loss of its safety-function, the following events:

– The most severe single natural phenomena expected at the site with appropriate ambient conditions.

– The site-related events.

– Reasonable probable combinations of less severe natural phenomena and/or site–related events.

– A single failure of manmade structural features.

(3) The two out of three divisions of the ultimate heat sink are capable of performing the safety functions specified in regulatory position (1).

(4) The Technical Specifications will include limiting conditions for operation in the event that conditions threaten partial loss of the capability of the UHS or the unit temporarily does not satisfy Regulatory Positions (1) and (3) during operation.

The reactor service water system safety-related piping will utilize stainless steel material hence provisions of RG 1.72 are not applicable.

### 9.2.5.9 Instrumentation and Alarms (Interface Requirements)

*UHS low water level (if applicable) and high water temperature are provided and alarmed in the control room. UHS surface water temperature indication is provided (if it can differ appreciably from the bulk temperature) in the control room.*

*UHS makeup and blowdown volumes (if applicable) are indicated by flow totalizers located in the makeup and blowdown lines.*

*Any components required for UHS system operation in Divisions A and B shall be operated from the Remote Shutdown System.*

UHS basin water low-level and high-water temperature are provided and alarmed in the control room. Low level initiates the start of makeup water. The UHS surface water level and temperature indications are provided in the control room. When the water level in the UHS falls to a low-low level, the unit shutdown is initiated.

UHS makeup and blowdown flow rates are indicated as well as the totalized volumes.

Any components required for UHS operation in Divisions A and B are capable to be operated from the RSS.

### 9.2.5.10 Tests and Inspections (Interface Requirements)

A preoperational test program and tests of the UHS have been established as described in Chapter 14, Subsection 14.2.12.1.77. In addition, performance of the site-specific ITAAC provided in COLA Part 9, Section 9.3 demonstrates that the interface requirements provided in Tier 1, Section 4.5/2.11.9 of the reference ABWR DCD for the UHS System are met.

## 9.2.8 Makeup Water (MWP) Preparation System

The conceptual design information in this subsection of the reference ABWR DCD is replaced with the following site-specific departures and supplements:

### 9.2.8.2 Power Generation Design Bases (Interface Requirement)

STP DEP 1.1-2

STP DEP 9.2-2

The minimum rating of the MWP equipment satisfies the normal water use for STP 3 & 4. Additionally, each demineralizer storage tank and its associated transfer pumps are sized to store and transfer demineralized water at 135 $m^3$/h. This meets the instantaneous demineralized water demand for short periods of time.

The fire-protection system does not rely on the stored (or makeup) filtered water capacity of the MWP for any single credible fire, i.e., the water supply to the fire-protection system storage tanks is manually controlled when MWP demand is otherwise low.

(1) *The MWP System consists of* reverse osmosis (RO) modules arranged in *two divisions capable of producing* ~~*at least 45 $m^3$/h*~~ 90 $m^3$/h each (In two-pass series configuration, the divisions are rated at 45 $m^3$/h each to satisfy the demands for each unit); one RO permeate tank and two divisions of demineralizers capable of producing 90 $m^3$/h *of demineralized water each.*

(2) *Storage of demineralized water shall be at least* ~~*760*~~ 5320 *$m^3$.*

(4) *Demineralized water shall be provided by* demineralized water forwarding pumps and associated piping *at a minimum flow rate of approximately 135 $m^3$/h* per unit *at a temperature between 10° to 38°C* for short durations.

(6) *The MWP System provides* instantaneous flows up to ~~*45*~~ 90 *$m^3$/h of* well ~~*filtered*~~ *water* for short durations *to meet maximum anticipated peak demand periods for the PSW System.*

(8) The MWP well water subsystem is capable of supplying makeup water to the UHS basin on an as-needed basis.

(9) STP 3 & 4 is a dual-unit station. A common MWP System, utilizing a common raw water storage tank and a common demineralized water storage tank, will be utilized to supply water to each respective Makeup Water Condensate System and the Makeup Water Purified System for STP 3 & 4. The MWP System is not safety related and does not have an assigned safety function.

(10) Each RO division can be operated in a two-pass series configuration for normal demands or in a single pass, parallel configuration to provide sufficient demineralized water during peak demands.

(11) In the event the well water system cannot supply sufficient quantities of makeup water, the MCR will be used as a backup source to the UHS basin.

(12) The MWP pretreatment subsystem is capable of supplying makeup water to the fire-protection system on an as needed basis.

### 9.2.8.3 System Description

The MWP System consists of both mobile and permanently installed water treatment systems.

The permanently installed system consists of wells, filters, RO modules, and demineralizers that prepare demineralized water from well water. The demineralized water is sent to storage tanks until it is needed. The components of the MWP system are shared components with the exception of the demineralizer water storage tanks, which are cross-connected to provide demineralized water to STP 3 & 4. The components of the MWP system are listed in Table 9.2-15 and the system block flow diagram is in Figure 9.2-10.

Two demineralized water trains are provided. Each train is comprised of a 2-pass RO system and mixed bed demineralizers.

In the normal mode, the RO units will be configured as two parallel RO trains, with each RO train consisting of two RO units in series (as a two-pass RO configuration) to produce 90 $m^3$/h total demineralized water. During normal operation, STP 3 & 4 requires approximately 45 $m^3$/h. Therefore, only one RO train needs to be in operation to support both units.

In order to meet peak instantaneous flows, the system can be configured such that the RO units will operate as four parallel single-pass RO trains capable of producing up to 180 $m^3$/h of demineralized water. However, the MWP system has an estimated total continuous maximum demineralized water demand of approximately 115 $m^3$/h. This is based on one unit in maximum peak demand (90 $m^3$/h) and the other unit in normal operation (23 $m^3$/h).

The mobile equipment will consist of similar processes as the permanent demineralizer system. Connections will be provided to interface with the mobile equipment.

The MWP system is designed to produce sufficient quantities of demineralized water. The system is operated as necessary to meet the demineralized water requirements for STP 3 & 4.

#### 9.2.8.3.1 Well Water System

A series of onsite wells including pumps, a well water storage tank/basin, and two well water forwarding pumps are provided that can produce sufficient water to meet the concurrent needs of the MWP system and the PSW system.

In addition to the water provided to the well water storage tank and the PSW system, water is also supplied to the UHS basin for makeup water on an as-needed basis. In the event the well water system cannot supply sufficient quantities of makeup water, the MCR will be used as a backup source to the UHS basin.

#### 9.2.8.3.2 Pretreatment System

Four 33 1/3%-capacity dual media filters with one in standby are provided in parallel that are backwashed when needed using one of two backwash pumps and water from a filtered water storage tank. Water may be sent from the filtered water storage tank to the fire-protection system or to the next components of the MWP system.

#### 9.2.8.3.3 Reverse Osmosis Modules

Two high-pressure, horizontal multistage RO feed pumps per train provide a feed pressure of approximately 3.14 MPaG. RO membranes are arranged in two parallel divisions (trains) of two passes each with the permeate of the first passes going to the inlet of the second passes. The reject or brine from the first passes is sent to the wastewater retention basin. A chemical addition tank, two pumps, and controls are provided to add sodium hydroxide to the permeate of the first pass. The reject from the second passes is recycled to the RO feed pump suction line. The permeate from the second pass is sent to a RO permeate storage tank.

In addition to the description above, each RO division can be operated in a single-pass parallel configuration to provide sufficient demineralized water during peak demands.

#### 9.2.8.3.4 Demineralizer System

The demineralizer system consists of two trains, each rated for 100% of the service flow. One demineralizer train is in operation at a time, while the other train is on standby. Two demineralizer feed pumps are provided in each train. Three mixed bed demineralizers are provided in parallel in each train with two normally in operation with the third in standby. The demineralized water is monitored and sent to the demineralized water prover tanks to monitor the water quality before transferring into the demineralized water storage tanks.

The demineralizer feed pumps can also be aligned manually to draw water from the demineralized water prover tanks. This allows recirculation and cleanup of the tank contents in the event of deteriorated water quality conditions.

#### 9.2.8.3.5 Demineralized Water Storage System

Two demineralized water storage tanks are provided for STP 3 & 4. Two demineralized water prover tanks serve as holding tanks for demineralized water until it is verified that the water quality is sufficient. The water is then forwarded to the demineralized water storage tanks for distribution to STP 3 & 4. Three demineralized water forwarding pumps per unit are provided to send the demineralized water to the makeup water purified system.

#### 9.2.8.3.6 Makeup Water Preparation Building

A building is provided for all of the subsystems listed above except for the well water storage tank/basin, filtered water storage tank, demineralized water prover tanks, and the demineralized water storage tanks, which are located outdoors. The building is

provided with a heating system capable of maintaining a temperature of at least 10°C at all times.

The building does not contain any safety-related structures, systems, or components. The MWP system will be designed so that any failure in the system, including any that cause flooding, will not result in the failure of any safety-related structure, system, or component.

The building has a large open area about 7.6 meters by 12 meters with truck access doors and services for mobile water processing systems. These services include electric power, service air, connections to the water storage tanks, and a waste connection. This area will be used for mobile water treatment systems or storage.

### 9.2.8.4 System Operation

#### 9.2.8.4.1 Normal Operation

During normal operation, the well pumps are controlled by water level controllers to keep the well water storage tank and UHS basin full. The well water forwarding pumps are controlled by a water level controller to keep the filtered water storage tank full. Normally, three filters will be operating with the other filter in standby. The fourth filter is started from the Control Building or is automatically started by a low water level in the filtered water storage tank. When any filter develops a high-pressure drop, it is isolated and any standby filter is put into operation. One of the two backwash pumps is operated to backwash the filter. The backwash is sent to the wastewater retention basin and is eventually discharged to the main cooling reservoir.

A water softener system or a combination of sulfuric acid and sodium hexametaphosphate is added to control calcium sulfate or other fouling and scaling in the RO membranes.

The RO feed pumps are controlled by a water level controller that keeps the RO permeate storage tank full. These pumps feed the water through both RO passes. The RO membranes are of the thin film composite type. The first pass permeate, which becomes feed for the second pass, has a pressure of about 1.37 to 1.77 kPaG. Sodium hydroxide is added to the first-pass permeate to adjust the pH to improve dissolved solids rejection in the second pass. During periods of peak demineralized water demand, the RO train can be placed in a single-pass parallel configuration. With this configuration, the first and second pass membranes provided will allow one train of demineralized water to supply STP 3 & 4 with the required peak demand.

The demineralizer feed pumps are controlled by a water level controller in the demineralized water storage tanks. Each demineralizer contains 2.2 $m^3$ of ion exchange resin. When the effluent quality of a demineralizer becomes unsatisfactory, it is automatically removed from operation and the standby demineralizer is automatically put into operation. The exhausted resins are regenerated offsite.

The demineralized water-forwarding pumps are controlled by a pressure switch in their discharge piping. Normally, one pump is operated to maintain a specified system

pressure. When the pressure drops below a specified pressure, the second pump is automatically put into operation until system pressure returns to the normal range. If this does not occur, the third pump is automatically put into operation.

The water quality is analyzed periodically to ensure the MWP system is meeting the required chemistry stated in Table 9.2-2a.

#### 9.2.8.4.2 Abnormal Operation

During the early construction period and at certain times later, the MWP system may either not be installed or may not be in operation. Also, there may be times when demineralized water requirements exceed the production capacity. During these periods, mobile water treatment systems will be used. They will be transported to the site by truck and will enter the MWP Building through large doors. When no longer required, they will be removed.

### 9.2.8.5 Evaluation of Makeup Water System Preparation Performance (Interface Requirements)

The following site-specific supplement addresses the COL License Information Item in this subsection:

The specified water treatment design was found to be acceptable and meets the design basis requirements and water quality requirements in Table 9.2-2a.

The raw water availability and the makeup water amounts were also analyzed for the STP 3 & 4 site. The groundwater availability was found to be acceptable and meets the design basis requirements for the MWP system.

### 9.2.8.8 Tests and Inspections (Interface Requirements)

The following site-specific supplement addresses the COL License Information Item in this subsection:

A preoperational test program and tests of the MWP system have been established as described in Chapter 14, Subsection 14.2.12.1.79. In addition, performance of the site-specific ITAAC provided in COLA Part 9, Section 9.3 demonstrate that the interface requirements provided in Tier 1, Section 4.3 of the reference ABWR DCD for the MWP System are met.

## 9.2.10 Makeup Water Purified System

STD DEP T1 2.14-1

## 9.2.11 Reactor Building Cooling Water System

### 9.2.11.1.1 Safety Design Bases

STD DEP 1.8-1

*(3) The safety-related portions and valves isolating the non-safety-related portions of the RCW System shall be designed to Seismic Category I and the ASME Code, Section III, Class 3, Quality Assurance B, Quality Group C, IEEE-603 and IEEE-308 requirements.*

### 9.2.11.2 ~~9.2.11.1~~System Description

STD DEP 9.2-1

*The reactor decay heat at four hours after shutdown is approximately 133.1 GJ/h. Each division of the RCW System has the design heat removal capability of ~~107.6~~ 108.02 GJ/h from the RHR System in addition to other cooling loads. If three divisions of RHR/RCW/RSW are used for heat removal, each division must remove one third of the decay heat, or 44.4 GJ/h. This means that each division will remove ~~107.6~~ 108.02 minus 44.4, or ~~63.2~~ 63.62 GJ/h of sensible heat, primarily by cooling the reactor water. If only two divisions of RHR/RCW/RSW are used for heat removal, each division must remove one half of the decay heat, or 66.6 GJ/h. This means the sensible heat removal will be ~~107.6~~ 108.02 minus 66.6 or ~~41.0~~ 41.42 GJ/h of sensible heat primarily from the reactor water. Of course the decay heat will decrease with time.*

STD DEP T1 2.14-1

### 9.2.11.3.2 Safety Evaluation of Equipment

STD DEP 1.8-1

*The safety-related parts of the RCW System are designed to Seismic Category I and ASME Code, Section III, Class 3, Quality Assurance B and Quality Group C requirements. The design also meets IEEE-603 and IEEE-308 requirements.*

STD DEP 9.2-1

*All heat exchangers and pumps ~~will be required~~ are normally placed in operation during the following plant operating conditions, in addition to LOCA: shutdown at 4 hours, shutdown at 20 hours and hot standby with loss of AC power.*

## 9.2.12 HVAC Normal Cooling Water System

### 9.2.12.1 Design Bases

### 9.2.12.1.1 Power Generation Design Bases

STD DEP 9.2-9

*The non-safety-related HVAC Normal Cooling Water (HNCW) System shall provide chilled water to the cooling coils of the drywell coolers, of each building supply unit and of local air conditioners to maintain design thermal environments during normal and upset conditions. The supply temperature is 7°C. The return temperature is ~~12°C~~14.7°C.*

## 9.2.14 Turbine Building Cooling Water System

### 9.2.14.2.1 General Description

STP DEP 9.2-3

*The TCW System is a single-loop system and consists of one surge tank, one chemical addition tank, three pumps with a capacity of ~~3405~~ 4550 $m^3$/h each, three heat exchangers with heat removal capacity of ~~68.7~~ 114.5 GJ/h each (connected in parallel), and associated coolers, piping, valves, controls, and instrumentation. Heat is removed from the TCW System and transferred to the non-safety-related Turbine Service Water (TSW) System (Subsection 9.2.16).*

*A TCW System sample is periodically taken for analysis to assure that the water quality meets the chemical specifications.*

### 9.2.14.2.3 System Operation

STP DEP 9.2-3

*The cooling water flow rate to the electro-hydraulic control (EHC) coolers, the turbine lube oil coolers and ~~aftercoolers, and generator exciter air cooler~~ the generator H2 cooler is regulated by control valves. Control valves in the cooling water inlet or outlet ~~from~~ of these units are throttled in response to temperature signals from the fluid being cooled.*

*The flow rate of cooling water to all of the other coolers is manually regulated by individual throttling valves located on the cooling water inlet or outlet ~~from~~of each unit.*

## 9.2.15 Reactor Service Water System

### 9.2.15.1 Portions Within Scope of ABWR Standard Plant

### 9.2.15.1.1 Safety Design Bases

STD DEP 1.8-1

*(2) The RSW System shall be designed to Seismic Category I and ASME Code, Section III, Class 3, Quality Assurance B, Quality Group C, ~~IEEE~~ 603 and IEEE-308 requirements.*

### 9.2.15.2 Portions Outside the Scope of ABWR Standard Plant

The conceptual design information in this subsection of reference ABWR DCD is replaced with the following supplements:

### 9.2.15.2.1 Safety Design Bases (Interface Requirements)

The following site-specific supplement addresses COL License information Items 1 through 6 in this subsection. Additional interface requirements from DCD Tier 1, Subsection 2.11.9 (Items (2), (4), (5), and (7)) are included under Item 7:

(1) The design characteristics for the Reactor Building Cooling Water System Heat Exchangers (RCW Heat Exchangers) are provided in Table 9.2-4d. The pressure drop across the heat exchangers will be provided following procurement, but before installation of equipment, in Table 9.2-17 (COM 9.2-1).

(2) The available NPSH referenced to the pump centerline is approximately 17 meters considering all losses, including entrance losses. The RSW pump purchase documents will specify that the NPSH required at the pump centerline shall be less than the NPSH available for all operating modes of the RSW pump. The required NPSH for the RSW pumps at pump suction locations considering anticipated low water levels will be provided following procurement, but before installation of equipment, in Table 9.2-17. (COM 9.2-1) The design data for the RSW pumps is provided in Table 9.2-13.

(3) The STP 3 & 4 RSW pump houses are contiguous with the UHS basins that are located directly south of the Reactor buildings.

(4) The RSW system consists of three divisions that are mechanically and electrically separated from each other. Structures housing RSW system components are Seismic Category I and are provided with interdivisional boundaries (including walls, floors, doors, and penetrations) that have a three-hour fire-rating. Each division is protected from flooding, spraying, steam impingement, pipe whip, jet forces, missiles, fire from the other divisions, and the effect of failure of any non-Seismic Category I equipment. Interdivisional flood control features preclude flooding from occurring in more than one division.

(5) The flood level in the Control Building will not exceed 5.0 meters in the event of an RSW line break and failure of an active component in any RCW heat exchanger room (see Subsection 9.2.15.2.4).

(6) System low-point drains and high-point vents are provided as required. All divisions are maintained full of water when not in service (to prevent water hammer) except when undergoing maintenance.

(7) The following interface requirements from DCD Tier 1 Section 2.11.9 are provided:

– Each RSW division is powered by its respective Class 1E division. In the RSW system, independence is provided between Class 1E divisions, and between Class 1E divisions and non-Class 1E equipment.

– RSW System Divisions A and B components have control interfaces with the RSS as required to support RSW operation during RSS design basis conditions.

– Anti-siphon capability is not required.

– Any portions of the RSW system located outside of the Control Building, including tunnel structures used to route RSW System Piping to/from the Control Building, will be designed for extreme natural phenomena such as earthquakes, tornados, and flooding (GDC 2).

### 9.2.15.2.2 Power Generation Design Bases (Interface Requirements)

(1) The RSW System is designed to function during abnormally high and low water levels at the RSW pump suction. The minimum basin water level to ensure a 30-day post accident supply with no makeup is 23.55 meters MSL. The RSW pumps are designed to provide adequate flow and head at low water level of 5.18 meters MSL. To prevent biological fouling, a biocide treatment is implemented using an intermittent injection upstream of the RSW pump.

(2) System components and piping materials are compatible with the site specific erosive and corrosive properties of the cooling water to minimize erosion/corrosion. Appropriate corrosion and erosion safety factors are used to ensure the integrity of the system for the life of the plant.

(3) The RSW System is designed to remove heat loads from RSW/RCW System (Tables 9.2-4a, 9.2-4b, and 9.2-4c) and dissipate the gained heat to atmosphere through the ultimate heat sink cooling tower.

(4) Potable water is provided to flush the service water side of the RCW heat exchangers whenever they are put into a wet standby condition (Subsection 9.2.4.1.3).

### 9.2.15.2.3 System Description

The RSW pump house is part of the UHS structure that is described in Subsection 9.2.5.

- The RSW system, as shown in Figure 9.2-7, operates in conjunction with the UHS to provide cooling water during normal operation, emergency shutdown, normal shutdown, testing, and loss of preferred power. The system removes heat from the RCW system and transfers it to the atmosphere via the UHS cooling tower. RSW system component data is provided in Tables 9.2-13 and 9.2-17. The heat removal requirements from the RCW system are shown in Tables 9.2-4a, 9.2-4b, and 9.2-4c.

- Each RSW system division is mechanically and electrically separated from the other divisions. The structures housing the RSW system components have interdivisional boundaries (including walls, floors, doors, and penetrations) that have a three-hour fire-rating. Additionally, each division is protected from flooding, spraying, steam impingement, pipe whip, jet forces, missiles, fire from other divisions, and the effect of failure of any non-Seismic Category I equipment.

- Anti-siphon capability is not provided or necessary to prevent flooding in the event of an RSW pipe break.
- The operating time of each RSW pump is monitored in the Distributed Control System, allowing the operator to take actions for equalizing the running time of pumps from the same division.

The RSW System is composed of the following:

(1) Three independent divisions of pumps, cooling towers, and piping systems, each supplying cooling water to the corresponding divisions of the RCW system. RCW heat exchangers are located in the Control Building at elevation –2.15 meters MSL.

(2) Each division has two motor-driven, centrifugal RSW pumps located in the pump house. The distance between the pump house and the Control Building is approximately 419 ft for STP 3 & 4. RSW pumps take suction from the UHS Basin. A self-cleaning strainer is provided on the discharge line of each pump.

(3) During normal plant operation, only one RSW pump and two RCW heat exchangers are in operation in each division. During other modes of operation, the second pump and the third heat exchanger are placed in operation, as required, in each division. Operating characteristics of the RSW pumps are provided in Tables 9.2-13 and 9.2-17.

(4) The discharge lines from the two pumps of each division are combined into headers and routed in Seismic Category I concrete tunnels (Appendix 3H.6) that link the RSW pump house with the Control Building. In the Control Building, the supply header branches into three lines, one line to each of the three RCW heat exchangers. The return lines from the RCW heat exchangers are merged into return headers that are routed back through the respective divisional tunnel to the UHS cooling tower cells. The piping tunnels maintain the physical, mechanical, and electrical divisional separation of the RSW system. Tunnels are equipped with sumps and sump pumps.

(5) The safety-related mechanical and electrical equipment of the RSW pump houses are protected from external flood.

(6) Each of the three RSW divisions is powered from its respective Class 1E division.

(7) A cold weather bypass line is provided for each RSW return header to allow bypassing the cooling tower and discharging the heated water above the water surface in the UHS basin.

(8) A blowdown line is provided on the RSW pump discharge header upstream of the pump isolation valve to maintain the water chemistry and maintain the water level within the limits. The blowdown isolation valves will be closed in the event of design basis accident.

(9) RSW is used for cooling the HVAC packaged water cooled condenser of the air conditioning units installed in each RSW pump house electrical room. Each air-conditioning unit is provided with a water-cooled condenser that requires RSW cooling water at a flow rate of 20.5 $m^3$/h based on estimated heat load of 256 MJ/h and water temperature not to exceed 95°F. The RSW used for cooling is returned into the UHS basin.

### 9.2.15.2.4 Safety Evaluation (Interface Requirement)

The RSW system has the capability to provide cooling water to all three divisions of the RCW heat exchangers. Each RSW division supply line is capable of providing sufficient cooling water to the respective RCW division heat exchangers that are essential to the safe shutdown of the reactor.

Redundant pumps, strainers, valves, and instrumentation inside of the pump house are physically separated from each other by three-hour fire-rated reinforced concrete walls that are designed to preclude coincident damage to redundant equipment from equipment failure or missiles.

The components of the RSW system (electrical equipment, instrumentation and controls as well as mechanical equipment and piping) are separated and protected to the necessary extent to ensure that sufficient equipment remains operating to permit shutdown of the unit in the event of any of the following:

(1) Flooding, spraying, steam impingement, pipe whip, jet forces due to pipe rupture or equipment failure

(2) Missiles

(3) Fire from the other divisions

(4) Failure of non-seismic Category I equipment

The RSW pumps will be selected such that the required NPSH will be conservatively below the NPSH available.

The calculation performed taking into account the longest distance between the pump house and the Control Building (approx. 128 meters) revealed that in the event of an RSW line break in any RCW heat exchanger rooms and considering an active component failure, the flood level in the Control Building will not exceed 5.0 meters.

### 9.2.15.2.5 Instrumentation and Alarms (Interface Requirement)

All pumps stop and all automatic isolation valves outside the Control Building close upon receipt of a high water level signal in the RCW heat exchanger room in that division.

The operators monitor the differential pressure across the self-cleaning strainers to maintain low differential pressure within the operating limits. High pressure difference across the service water strainers is alarmed in the control room.

Pressure indicators and transmitters with readout to the Control Room are provided on the RSW discharge common header of each division. Remote indication of RSW temperature at the pump discharge header of each RSW Division is provided in the control room. A temperature test point is provided on each RSW return line downstream of the RCW heat exchanger.

Control is provided for manual starting or stopping each RSW pump and cooling tower fans from the control room. Interlocks prevent startup of the RSW pump unless the discharge valve is fully closed. The discharge valve starts to open after a time delay following energization of the pump motor.

During normal operation, the standby RSW pump is started automatically at the overload trip of the running pump. If a LOCA occurs, all standby pumps start and all standby valves open and the blowdown isolation valves are closed. If a loss of offsite power occurs during a LOCA, the pumps momentarily stop until transfer to standby diesel-generator power is completed. The pumps are restarted automatically according to the diesel loading sequence. No operator action is required following a LOCA to start the RSW System in its LOCA operating mode.

Manual control is provided in the main control room for opening and closing all motor operated valves associated with the RSW System.

### 9.2.15.2.6 Tests and Inspections (Interface Requirements)

The RSW system is designed for periodic pressure and functional testing.

Under conditions as close to design as practical, the performance of the full operational sequence that brings the system into operation for reactor shutdown and for LOCA, including operating of applicable portions of the reactor protection system and the transfer between normal and standby power sources.

## 9.2.16 Turbine Service Water System

### 9.2.16.2 Portions Outside the Scope of ABWR Standard Plant

STP DEP 9.2-10

The conceptual design information in this subsection of reference ABWR DCD is replaced with the following supplements and site specific departure.

### 9.2.16.2.2 Power Generation Design Bases (Interface Requirements)

STP DEP 9.2-10

The following site-specific departure addresses the COL License Information item in this subsection.

The following TSW system design features are site-dependent:

(1) The temperature increase across the Turbine Building cooling water (TCW) heat exchangers is 6.0°C. The pressure drop across the heat exchangers is 69 kPa.

(2) The available NPSH for the TSW pumps at pump suction locations considering anticipated low water levels is 99kPa. The required NPSH for the TSW pumps will be less than the available NPSH during all operating conditions.

(3) The TSW pump house is located south of the STP 3 & 4 power blocks at the MCR in the STP 3 & 4 circulating water intake structure.

(4) The heat removal requirements from the TCW system are in Subsection 9.2.14.2.

(5) System low-point drains and high-point vents are provided in the TSW system as required. All components are maintained full of water (to prevent water hammer) when not in service except when undergoing maintenance.

Table 9.2-16 of the reference ABWR DCD is replaced to reflect site-specific design information for the TSW system.

### 9.2.16.2.3.1 General Description

The TSW system, illustrated in Figure 9.2-8 with site-specific design information, consists of three 50% capacity vertical wet pit pumps located in the circulating water intake structure. Two pumps are in operation during normal operation with one pump in standby.

The TSW pumps circulate water from the MCR through the three TCW heat exchangers (two are normally in service and one is on standby). The heated cooling water flows back to the MCR via the Circulating Water System return piping to dissipate heat to the atmosphere.

The TSW piping is interconnected with the circulating water piping to allow the TSW pumps to provide initial fill of the circulating water piping.

### 9.2.16.2.3.2 Component Description

Three strainers are provided (one for each TSW pump). The strainers are periodically backwashed to the MCR.

Piping and valves in the TSW system are protected from corrosion with suitable corrosion resistant material as required by the STP 3 & 4 soil and water conditions.

#### 9.2.16.2.3.3 System Operation

The TSW system is operated from the main control room.

The standby pump is started automatically in the event the normally operating pump trips or the discharge header pressure drops below a preset limit.

In the event of loss of the preferred power source, at least one TSW pump will have the capability of being powered by the combustion turbine generator.

### 9.2.16.2.4 Safety Evaluation (Interface Requirements)

STP DEP 9.2-10

The following site-specific departure addresses the COL License Information item in this subsection.

As demonstrated by multiple means in Subsection 3.4.1.1.2.5, a break in the TSW line will not result in flooding of safety-related structures, systems, and components.

## 9.2.17 COL License Information

### 9.2.17.1 HECW System Refrigerator Requirements

The following site-specific supplement addresses COL License Information Item 9.11 (COM 9.2-2):

(1) Technical requirements will be provided in the procurement document for the refrigerators to ensure there are provisions for adjusting the refrigerator capacity to chilled water outlet temperature.

(2) Detailed design documents will be provided for starting and stopping the pump and refrigerator on proper sequence.

(3) Alternate AC power is provided for reacting to a loss of electrical power for automatic restarting of pumps and refrigerators.

(4) Technical requirements in the procurement documents will include national standards for design, fabrication, and testing to minimize the potential for coolant leakage or release into system or surrounding equipment environs.

(5) After procurement of equipment, transient effects on starting and stopping or prolonged stoppage of the refrigeration/chiller units will be evaluated. The evaluation will include such effects as high restart circuit drawdowns on safety buses, coolant-oil interactions, degassing needs, coolant gas leakage, or release in equipment areas along with flammability threats, synchronized refrigeration swapping.

### 9.2.17.2 Reactor Service Water System Requirements

The following site-specific supplement addresses COL License Information Item 9.12.

The following plant-specific requirements apply to the RSW system:

(1) The RSW/UHS water is periodically tested to ensure that the water chemistry is maintained in the acceptable limits. Periodic visual inspection of the intake structure is scheduled to detect biofouling and removal of any fouling accumulations that are detected.

(2) The RSW pumps will be rotated with the standby pump at a frequency less than 3 months to equalize the equipment operating time, as full flow for one pump is achieved in all cooling loops during normal operation. There are no infrequently used cooling loops.

(3) To prevent biological fouling, a biocide treatment is implemented using an intermittent injection upstream of the RSW pump as discussed in Subsection 9.2.5.

(4) Biocide-treated potable water is used for flushing of the RSW system cooling loops associated with the RCW heat exchangers whenever they are put into a wet standby condition. Appropriate methods for biocide treatment of the layup fluid will be developed following equipment procurement and applicable procedures will be developed before fuel load incorporating these methods. These procedures will be developed consistent with the plant operating procedure development plan in Section 13.5. (COM 9.2-3)

(5) Since the RSW system does not provide cooling water to any other systems, provisions for biocide treatment before layup of other systems, such as the fire-protection system, are not applicable to STP 3 & 4.

(6) Emergency procedure guidelines will be developed before fuel load to identify the operator manual actions required if a leak is detected and the affected RSW division is automatically tripped and isolated. These guidelines will be developed consistent with the plant operating procedure development plan in Section 13.5. (COM 9.2-4)

## Table 9.2-4b Reactor Building Cooling Water Division B

STD DEP T1 2.14-1

* Heat in GJ/h; flow in $m^3$/h, sums may not be equal due to rounding.

† HECW refrigerator, room coolers (RHR, HPCF, SGTS, ~~FCS~~, CAMS), CAMS cooler, HPCF and RHR motor and mechanical seal coolers.

‡ The heat transferred from the CUW heat exchanger at the start of cooldown is appreciable, but during the critical last part of a cooldown, the heat removed is very little because the temperature difference between the reactor water and the RCW System is small. Sometimes, the operators may remove the CUW heat exchangers from service during cooldown. Thus, the heat removed varies from about that during normal operation at the start of cooldown to very little at the end of cooldown.

ƒ Includes FPC room cooler.

** Drywell (B) and RIP coolers.

†† Reactor Building sampling coolers; LCW sump coolers (in drywell and reactor building), RIP MG sets and CUW pump coolers.

## Table 9.2-4c Reactor Building Cooling Water Division C

STD DEP T1 2.14-1

** Heat in GJ/h; flow in $m^3$/h, sums may not be equal due to rounding.*

*† HECW refrigerator, room coolers, motor coolers, and mechanical seal coolers for RHR and HPCF~~, FCS~~ room cooler, SGTS room cooler.*

*‡ Instrument and service air coolers, CRD pump oil cooler, radwaste components, HSCR condenser, and turbine building sampling coolers.*

**Table 9.2-4d Design Characteristics for Reactor Building Cooling Water System Components**

| | | |
|---|---|---|
| **RCW Pumps (Two per division)** | | |
| | RCW (A)/(B) | RCW (C) |
| Discharge Flow Rate | 1420 $m^3$/h/pump | 1,237 $m^3$/h/pump |
| Pump Total Head | 0.57 MPa | 0.52 MPa |
| Design Pressure | 1.37 MPa | 1.37 MPa |
| Design Temperature | 71°C | 71°C |
| | | |
| **RCW Heat Exchangers (Three per division)** | | |
| | RCW (A)/(B) | RCW (C) |
| Capacity (for each heat exchanger) | ~~47.73~~ 50.1 GJ/h | ~~44.38~~ 46.1 GJ/h |
| **RCW Surge Tanks** | | |
| Capacity | 16 $m^3$ (total, each) | |
| Design Pressure | Static Head | |
| Design Temperature | 71°C | |
| | | |
| **RCW Chemical Addition Tanks** | | |
| Design Pressure | 1.37 MPaG | |
| Design Temperature | 71°C | |
| | | |
| **RCW Piping** | | |
| Design Pressure | 1.37 MPaG | |
| Design Temperature | 71°C | |

**Table 9.2-6 HVAC Normal Cooling Water System Component Description**

| HNCW Chillers | |
|---|---|
| Quantity | 5 (including one standby unit) |
| Cooling Capacity | ~~9.42~~18GJ/h each |
| Chilled water flow per unit | ~~450~~560 $m^3$/h |
| Supply temperature | 7°C |
| Condenser water flow per unit | ~~420~~894 $m^3$/h |
| Supply temperature (maximum) | ~~45°~~ 41°C |
| Control | Inlet guide vane |
| Condenser | Shell and tube |
| Evaporator | Shell and tube |
| | |
| HNCW Water Pumps | |
| Quantity | 5 (including one standby ~~unit~~ pump) |
| Type | Centrifugal, horizontal |
| Capacity $m^3$/h each | ~~450~~560 |
| ~~Total discharge head~~ | ~~0.49 MPa~~ |

## Table 9.2-7 HVAC Normal Cooling Water Loads

| Name of Area or Unit | During Normal Operation | | During Refueling Shutdown | |
|---|---|---|---|---|
| | Capacity GJ/h | Flow $m^3/h$ | Capacity GJ/h | Flow $m^3/h$ |
| ~~Reactor Building~~ | | | | |
| Drywell Coolers | ~~0.96~~ **1.74** | ~~69.5~~ **53.9** | ~~0.80~~ **1.74** | ~~69.5~~ **53.9** |
| RIP Coolers | ~~1.59~~ **4.52** | ~~20.9~~ **141** | ~~3.06~~ **0.00** | ~~104~~ **0.00** |
| ~~Others (Note 1)~~ | ~~10.05~~ | ~~131~~ | ~~18.84~~ | ~~636~~ |
| **Reactor Building Secondary Containment Air Handling Units** | **5.34** | **166** | **5.34** | **166** |
| **Reactor Building Nonsafety-Related Coolers** | **0.84** | **26.0** | **2.02** | **76.0** |
| **Control Building MG Set and Nonsafety-Related Electric. Equipment Room. Coolers** | **0.94** | **29.1** | **0.94** | **29.1** |
| Turbine Building ~~(Note 2)~~ (Note 2) **Air Handling Units and Room Coolers** | ~~2.26~~ **46.2** | ~~43.5~~ **1450** | ~~1.13~~ **36.3** | ~~39~~ **1140** |
| Radwaste Building | ~~5.69~~ 4.36 | ~~81.2~~ **132** | ~~6.70~~ 4.36 | ~~232~~ **132** |
| (Note 4) | | | | |
| Service Building | ~~3.64~~ 2.34 | ~~175~~ **72.6** | ~~3.64~~ 2.40 | ~~175~~ **74.3** |
| Others | 4.61 | ~~151~~ **144** | 3.56 | ~~151~~ **111** |
| (Note 5) | | | | |
| Total | ~~28.89~~ **70.9** | ~~672~~ **2220** | ~~37.68~~ **56.7** | ~~1,407~~ **1790** |
| | **(Note 6)** | | ~~(Note 6)~~ | |

## Table 9.2-7 HVAC Normal Cooling Water Loads

NOTES:

(1) ~~*Loads include reactor/turbine building supply units, HVH, FCU and room coolers.*~~ **DELETED**

*(2)* ~~*Loads are the offgas cooler condenser (normal operation only) and the electrical equipment supply unit.*~~***Loads include the offgas cooler condenser (normal operation only) and the electrical equipment supply unit.***

(3) Deleted

(4) Loads included are the radwaste building supply unit and the radwaste building electrical equipment room supply unit.

(5) Loads include HVH units not previously included.

(6) The HNCW chillers are ~~***9.38***~~ **18**GJ/h each and the pumps ~~***449***~~ **560**$m^3$/h each **(Table 9.2-6)**. Thus, four HNCW **chillers and** pumps have total ~~*capacity*~~ **capacities** in excess of the amount required as shown in the ~~*last*~~ **first and second** columns of this table.

### Table 9.2-11 Turbine Island Auxiliary Equipment

The TCW System removes heat from the following components:

- HVAC normal cooling water chillers
- Generator stator coolers, hydrogen coolers, and generator gas dryer cooler~~*seal oil coolers and exciter coolers and breaker coolers*~~
- Turbine lube coolers
- Mechanical vacuum pump seal coolers
- Isophase bus coolers
- Electro-hydraulic control coolers
- Reactor feed pump and auxiliary coolers
- Standby reactor feed pump motor coolers
- Condensate pump motor coolers
- Heater drain pump motor coolers
- **Sample coolers**
- Condensate booster pump oil and motor coolers
- Offgas condenser

### Table 9.2-13 Reactor Service Water System (Interface Requirements)

| **RSW Pumps (Two per division)** | |
|---|---|
| Discharge flow rate, per pump | ~~*1,800*~~ **3290** $m^3$/h |
| Pump total discharge pressure~~*head*~~ | ~~*0.34*~~**0.67** MPa |
| ~~*Design*~~Max. operating pressure | 0.~~*79*~~**1.42** MPa |
| Design temperature | 50°C |
| RSW Piping and Valves | |
| Design pressure | **1.56**~~*1.08*~~ MPa |
| Design temperature | 50°C |

**Table 9.2-14 Potable and Sanitary Water System Components (Interface Requirements)**

| Component | Major Design Features |
|---|---|
| All tanks are vertical, cylindrical type except where noted. All water pumps are horizontal, centrifugal and single stage. All chemical feed pumps are positive displacement diaphragm type. | |
| **Potable Water System Components** | |
| Potable Water Storage Tank | |
| Capacity | ~~23 $m^3$~~ **45 $m^3$** |
| Potable Water Pump | |
| Quantity | 2 |
| Capacity | ~~23 $m^3$/h~~ **45 $m^3$/h each** |
| Head | ~~18 m~~ **58 m** |
| Hypochlorinator Pump | |
| Capacity | ~~0.6 $m^3$/h~~ **1.2 $m^3$/h** |
| Head | 9m |
| Hypochlorite Tank | |
| Capacity | ~~0.2 $m^3$~~ **0.4 $m^3$** |
| Hydropneumatic Pressure Tank | |
| Type | Horizontal, cylindrical |
| Capacity | ~~15 $m^3$~~ **30 $m^3$** |
| Design pressure | 1.03 MPaG |
| Air Compressor | |
| Type | Piston, single-stage |
| Capacity | ~~5 $m^3$/min~~ **10 $m^3$/min** |
| Discharge pressure | 0.8 MPaG |
| **Sewage Treatment System Components** | |
| Comminutor | |
| Type | Revolving vertically-slotted drum |
| Aeration Tank | |
| Quantity | 2 |
| Volume | ~~25 $m^3$~~ **100 $m^3$each** |

**Table 9.2-14 Potable and Sanitary Water System Components (Interface Requirements) (Continued)**

| Component | Major Design Features |
|---|---|
| Clarifier | |
| Quantity | 1 large, 2 small |
| Volume | ~~19m$^3$, 7m$^3$~~ **76 m$^3$, 28 m$^3$** |
| Hypochlorite Contact Tank | |
| Volume | ~~4.25 m$^3$~~ **17 m$^3$** |
| Component | Major Design Features |
| Aerobic Digester | |
| Quantity | 2 |
| Volume | ~~25 m$^3$~~ **100 m$^3$** each |
| Air Blower | |
| Quantity | 3 |
| Capacity | ~~0.34 m$^3$/min~~ **1.36 m$^3$/min** each |
| Froth Spray Pump | |
| Capacity | ~~6 m$^3$/h~~ **24 m$^3$/h** |
| Head | 30 m |
| Hypochlorite Feed Pump | |
| Capacity | ~~1.5 m$^3$/h~~ **6 m$^3$/h** |
| Head | 30 m |
| Hypochlorite Tank | |
| Capacity | ~~0.4 m$^3$~~ **1.6 m$^3$** |

**Table 9.2-15 Makeup Water Preparation System Components (Interface Requirements)**

| Component | Major Design Features |
|---|---|
| All tanks are vertical, cylindrical type. All water pumps are horizontal, centrifugal and single-stage except the RO feed pumps. All chemical feed pumps are positive displacement, diaphragm type. | |
| Well and Well Pumps | |
| Capacity | At least ~~450~~ **540** $m^3$/h |
| Well Water Storage Tank/Basin | |
| Capacity | ~~38~~ **450** $m^3$ |
| Well Water Forwarding Pumps | |
| Quantity | 2 |
| Capacity | ~~230~~ **460** $m^3$/h |
| Filters | |
| Quantity | ~~2~~ 4 |
| Capacity | ~~230~~ **155** $m^3$/h each |
| Type | Pressure type, dual media |
| Filtered Water Storage Tank | |
| Capacity | ~~150~~ **450** $m^3$ |
| Backwash Pumps | |
| Quantity | 2 |
| Capacity | 450 $m^3$/h each |
| Head | 27m |
| RO Feed Pumps | |
| Quantity | 4 (2 per train) |
| Type | Horizontal, multistage |
| Capacity | ~~45~~**90** $m^3$/h per train |
| Head | 2.75 to 3.43 MPaG |
| RO First Pass | |
| Quantity | 2 |
| Type | 2-to-1 array of thin film composite membranes |
| Capacity | 68 $m^3$/h permeate each with 25% rejection |
| RO Second Pass | |
| Quantity | 2 |
| Type | 1-to-1 array of thin film composite membranes |
| Capacity | 45 $m^3$/h permeate each with 33% rejection |
| RO Permeate Storage Tank | |
| Capacity | ~~20~~ **60** $m^3$ |

**Table 9.2-15 Makeup Water Preparation System Components (Interface Requirements) (Continued)**

| Component | Major Design Features |
|---|---|
| Demineralizer Feed Pumps | |
| Quantity | 4 (2 per train) |
| Capacity | ~~23~~**90** $m^3$/h ~~each~~per train |
| Head | 16m |
| Demineralizers | |
| Quantity | 6 (2 normally operating) |
| Capacity | ~~23~~ **45** $m^3$/h each |
| Resin | ~~1.1~~ **2.2** $m^3$ ~~of 1:2 cation/anion resin each~~ |
| **Demineralized Water Prover Tanks**<br>**Quantity**<br>**Capacity** | <br>**2**<br>**760 $m^3$ each** |
| Demineralized Water Storage Tanks | |
| Quantity | 2 |
| Capacity | ~~380~~ **1900** $m^3$ each |
| Demineralized Water Forwarding Pumps | |
| Quantity | ~~3~~ **6 (2 trains of 3 pumps)** |
| Capacity | ~~45~~**135** $m^3$/h per train |
| **Chemical Feed Tank ($H_2SO_4$)**<br>**Capacity** | <br>**2.2 $m^3$** |
| **Chemical Feed Pump ($H_2SO_4$)**<br>**Quantity** | <br>**2** |
| Chemical Feed Tank (NaHMP) | |
| Capacity | ~~0.8~~ **1.6** $m^3$ |
| Chemical Feed Pump (NaHMP) | |
| Quantity | 2 |
| Capacity | ~~0.04~~ **0.08** $m^3$/h each |
| Chemical Feed Tank (NaOH) | |
| Capacity | ~~1.5~~ **3.0** $m^3$ |
| Chemical Feed Pump (NaOH) | |
| Quantity | 4 (three normally operating with one spare) |
| Capacity | ~~0.04~~ **0.08** $m^3$/h |

**Table 9.2-16 Turbine Service Water System (Interface Requirement)**

| | |
|---|---|
| **TSW Pumps (Three 50% pumps)** | |
| Discharge Flow Rate | 4600 $m^3$/h per pump |
| Pump Total Head | ~~0.34~~0.37 MPa |
| Design Pressure | ~~0.69~~0.96 MPaG |
| Design Temperature | 50°C |
| **TSW Piping and Valves** | |
| Design Pressure | ~~0.69~~0.96 MPaG |
| Design Temperature | 50°C |

**Table 9.2-17 Design Data for Reactor Service Water System**

| Design data | | Division A | Division B | Division C |
|---|---|---|---|---|
| RSW design flow rate to RCW heat exchangers | $m^3$/h | 3240 | 3240 | 3240 |
| RCW heat exchanger temperature increase at maximum load | °C | 6.3 | 6.4 | 6.6 |
| RCW heat exchanger pressure drop | MPa | [1] | [1] | [1] |
| RSW pump NPSH required | m | [1] | [1] | [1] |
| RSW pump NPSH available at pump's centerline based on the minimum water level of 1.83 m above suction line's centerline | m | 16.9 | 16.9 | 16.9 |

[1] Reference Section 9.2.15.2.1

**Table 9.2-18 RSW System Performance Data for Various Modes of Operation**

| Operating Mode | RSW Flow per division ($m^3/h$) | No. of heat exchangers in operation | Flow through each heat exchanger ($m^3/h$) | No. of pumps in operation per division | RSW Pump total head (m) |
|---|---|---|---|---|---|
| Normal | 3240 | 2 | 1620 | 1 | 65.5 |
| Reactor Shutdown 4 Hours | 4860 | 3 | 1620 | 2 | 70.1 |
| Reactor Shutdown 24 Hours | 4860 | 3 | 1620 | 2 | 70.1 |
| Hot Standby | 4860 | 3 | 1620 | 2 | 70.1 |
| Hot Standby LOPP | 4860 | 3 | 1620 | 2 | 70.1 |
| LOCA | 4860 | 3 | 1620 | 2 | 70.1 |

**Table 9.2-19 Heat Loads for 30-Day LOCA**

| Case D1 | | |
|---|---|---|
| **Time** | **Component** | **HEAT LOAD (MWt)** |
| 0–60 seconds | Fuel Relaxation | See Table 9.2-20a |
| 0–120 seconds | Metal-Water-Reaction | See Table 9.2-20a |
| 0–1 day | Stored Energy | See Table 9.2-20b |
| | 2 HPCF Pumps | See Table 9.2-21a |
| 0–2 days | 6 RSW & RCW Pumps | See Table 9.2-21a |
| | Other LOCA Heat Loads | See Table 9.2-22 |
| 2–30 days | 2 RSW & RCW Pumps | See Table 9.2-21a |
| | Other LOCA Heat Loads | See Table 9.2-22 |
| 0–30 days | 3 LPFL Pump | See Table 9.2-21a |
| | Decay Power @ 4400 MWt [1] | See Table 9.2-20a |
| | | |
| | | |
| | Case D2 | |
| Time | Component | HEAT LOAD (MWt) |
| 0–60 seconds | Fuel Relaxation | See Table 9.2-20a |
| 0–120 seconds | Metal-Water-Reaction (MWR) | See Table 9.2-20a |
| 0–1 day | Stored Energy | See Table 9.2-20b |
| | 2 HPCF Pumps | See Table 9.2-21b |
| 0–2 days | 6 RSW & RCW Pumps | See Table 9.2-21b |
| | Other LOCA Heat Loads | See Table 9.2-22 |
| 2–30 days | 4 RSW & RCW Pumps | See Table 9.2-21b |
| | Other LOCA Heat Loads | See Table 9.2-22 |
| 0–30 days | 3 LPFL Pump | See Table 9.2-21b |
| | Decay Power @ 4400 MWt [1] | See Table 9.2-20a |

[1] A higher reactor output is conservatively used for the UHS analysis.

## Table 9.2-20a Shutdown Power for Cases D1 & D2

| Day | Shutdown Time (sec) | Decay Power Fract. 2σ | Fuel Relaxation | MWR | Shutdown Power Heat Load MWt |
|---|---|---|---|---|---|
| | 0.00E+00 | 1.00E+00 | 0 | 0.03 | 4.54E+03 |
| | 1.00E-01 | 1.00E+00 | 0.02455 | 0.03 | 4.63E+03 |
| | 1.00E+00 | 5.10E-01 | 0.2455 | 0.03 | 3.46E+03 |
| | 2.00E+00 | 3.40E-01 | 0.3915 | 0.03 | 3.34E+03 |
| | 4.00E+00 | 2.00E-01 | 0.4977 | 0.03 | 3.19E+03 |
| | 1.00E+01 | 6.70E-02 | 0.3197 | 0.03 | 1.83E+03 |
| | 2.00E+01 | 4.75E-02 | 0.06639 | 0.03 | 6.30E+02 |
| | 6.00E+01 | 3.92E-02 | 2.32E-05 | 0.03 | 3.02E+02 |
| | 8.00E+01 | 3.74E-02 | 0 | 0.03 | 2.94E+02 |
| | 1.00E+02 | 3.56E-02 | 0 | 0.03 | 2.85E+02 |
| | 1.20E+02 | 3.47E-02 | 0 | 0.03 | 2.81E+02 |
| | 1.50E+02 | 3.34E-02 | 0 | 0 | 2.27E+02 |
| | 2.00E+02 | 3.12E-02 | 0 | 0 | 1.37E+02 |
| | 4.00E+02 | 2.74E-02 | 0 | 0 | 1.20E+02 |
| | 6.00E+02 | 2.53E-02 | 0 | 0 | 1.11E+02 |
| | 1.00E+03 | 2.25E-02 | 0 | 0 | 9.91E+01 |
| | 2.00E+03 | 1.87E-02 | 0 | 0 | 8.24E+01 |
| | 4.00E+03 | 1.51E-02 | 0 | 0 | 6.65E+01 |
| | 6.00E+03 | 1.33E-02 | 0 | 0 | 5.86E+01 |
| | 1.00E+04 | 1.15E-02 | 0 | 0 | 5.07E+01 |
| | 2.00E+04 | 9.60E-03 | 0 | 0 | 4.22E+01 |
| | 4.00E+04 | 8.01E-03 | 0 | 0 | 3.52E+01 |
| | 6.00E+04 | 7.19E-03 | 0 | 0 | 3.17E+01 |
| 1 | 8.64E+04 | 6.58E-03 | 0 | 0 | 2.89E+01 |
| | 1.00E+05 | 6.26E-03 | 0 | 0 | 2.75E+01 |
| 2 | 1.73E+05 | 5.42E-03 | 0 | 0 | 2.38E+01 |

**Table 9.2-20a Shutdown Power for Cases D1 & D2 (Continued)**

| Day | Shutdown Time (sec) | Decay Power Fract. 2σ | Fuel Relaxation | MWR | Shutdown Power Heat Load MWt |
|---|---|---|---|---|---|
| | 2.00E+05 | 5.11E-03 | 0 | 0 | 2.25E+01 |
| 3 | 2.59E+05 | 4.81E-03 | 0 | 0 | 2.11E+01 |
| 4 | 3.46E+05 | 4.36E-03 | 0 | 0 | 1.92E+01 |
| | 4.00E+05 | 4.08E-03 | 0 | 0 | 1.80E+01 |
| 5 | 4.32E+05 | 4.02E-03 | 0 | 0 | 1.77E+01 |
| | 6.00E+05 | 3.70E-03 | 0 | 0 | 1.63E+01 |
| | 8.00E+05 | 3.32E-03 | 0 | 0 | 1.46E+01 |
| 10 | 8.64E+05 | 3.20E-03 | 0 | 0 | 1.41E+01 |
| | 1.00E+06 | 2.94E-03 | 0 | 0 | 1.29E+01 |
| 20 | 1.73E+06 | 2.49E-03 | 0 | 0 | 1.09E+01 |
| | 2.00E+06 | 2.32E-03 | 0 | 0 | 1.02E+01 |
| 30 | 2.59E+06 | 2.17E-03 | 0 | 0 | 9.55E+00 |

**Table 9.2-21b Stored Energy for Cases 1 & 2**

| | | | | | |
|---|---|---|---|---|---|
| Temperature from (°C): | | 288.89 | | Temperature to (°C) | 0 |
| Temperature drop (°C): | | 288.89 | | Avg. Temperature (°C) | 144.44 |
| Vessel | Mass (kg) | 907200 | | | |
| Internals | Mass (kg) | 408240 | | | |
| Piping | Mass (kg) | 63504 | | | |
| C. Steel | Mass (kg) | 1378944 | | C (kJ/kg-°C) | 0.54 |
| Sensible Energy (MJ) | | 2.17E+05 | | | |
| | | | | | |
| Fuel (UO2): | Mass (kg) | 181440 | | C (kJ/kg-°C) | 0.272 |
| Sensible Energy (MJ) | | 1.43E+04 | | | |
| Assembly (Zr): | Mass (kg) | 81648 | | C (kJ/kg-°C) | 0.310 |
| Sensible Energy (MJ) | | 7.31E+03 | | | |
| Water: | Mass (kg) | 331128 | | uf @ 562.04 K (kJ/kg) | 1274.18 |
| | | | | uf @ 273.15 K (kJ/kg) | 0.00 |
| Sensible Energy (MJ) | | 4.22E+05 | | | |
| Steam: | Mass (kg) | 9979.2 | | ug @ 562.04 K (kJ/kg) | 2578.60 |
| | | | | uf @ 273.15 K (kJ/kg) | 0.00 |
| Sensible & Latent Energy (MJ) | | 2.57E+04 | | | |
| Total Stored Energy (MJ) | | 6.86E+05 | | released evenly in 1 day (assumed) | |
| Stored Energy Rate (MW) | | 7.94 | | released evenly in 1 day (assumed) | |

**Table 9.2-21a Pump Heat for Case D1**

| Efficiency: | 100% | | 1 hp = 0.7457 kW |
|---|---|---|---|
| **System** | **kW** | **No. of Pump** | **Duration** |
| HPCF | **1491.4** | 2 | 2 for 1 day, 0 for rest 29 days |
| LPFL | **596.6** | 3 | Conservatively assumed on for 30 day LOCA |
| RSW | **555.5** | 6 | 6 for first 2 days, 2 for rest 28 days |
| RCW | **326.6** | 6 | 6 for first 2 days, 2 for rest 28 days |
| Total Pump Heat Loads (MW) | | | |
| Day 1 | **10.07** | | |
| Day 2 | **7.08** | | |
| Day 30 | **3.55** | | |

**Table 9.2-21b Pump Heat for Case D2**

| Efficiency: | 100% | | 1 hp = 0.7457 kW |
|---|---|---|---|
| **System** | **kW** | **No. of Pump** | **Duration** |
| HPCF | 1491.4 | 2 | 2 for 1 day, 0 for rest 29 days |
| LPFL | 596.6 | 3 | Conservatively assumed on for 30 day LOCA |
| RSW | 555.5 | 6 | 6 for first 2 days, 4 for rest 28 days |
| RCW | 326.6 | 6 | 6 for first 2 days, 4 for rest 28 days |
| Total Pump Heat Loads (MW) | | | |
| Day 1 | 10.07 | | |
| Day 2 | 7.08 | | |
| Day 30 | 5.32 | | |

**Table 9.2-22 Other LOCA Loads for Cases D1 & D2**

| LOCA Heat Load (MWt) | | | | | | |
|---|---|---|---|---|---|---|
| | **Total** | **RHR HX** | **Other Heat Loads** | | | |
| Div A | 41.5 | 26.56 | 14.94 | | | |
| Div B | 43.5 | 26.56 | 16.94 | | | |
| Div C | 38.8 | 26.56 | 12.24 | | | |
| Day 2: Total LOCA Heat Load for Div A+B+C: | | | 44.12 | | | |
| Day 30: Total LOCA Heat Load for Div A+B [1]: | | | 31.88 | | | |

[1] Div C has the least LOCA HL, hence assumes turnoff after 2 day of LOCA

**Table 9.2-23a Meteorological Conditions Which Maximize Water Temperature (Worst 1-Day)**

| Time (hr) | Wet Bulb Temperature (WBT) (°C) | Dry Bulb Temperature (DBT) (°C) | Pressure (P) (Pa) |
|---|---|---|---|
| 1 | 27.7 | 28.9 | 9.984E+04 |
| 2 | 27.4 | 27.8 | 9.991E+04 |
| 3 | 27.2 | 27.2 | 9.997E+04 |
| 4 | 27.2 | 27.2 | 1.000E+05 |
| 5 | 26.4 | 27.2 | 1.000E+05 |
| 6 | 26.3 | 26.7 | 1.007E+05 |
| 7 | 26.4 | 27.2 | 1.007E+05 |
| 8 | 26.1 | 26.1 | 1.007E+05 |
| 9 | 26.1 | 26.1 | 1.007E+05 |
| 10 | 26.1 | 26.1 | 1.007E+05 |
| 11 | 26.1 | 26.1 | 1.007E+05 |
| 12 | 25.6 | 25.6 | 1.008E+05 |
| 13 | 26.1 | 26.1 | 1.009E+05 |
| 14 | 27.2 | 27.2 | 1.009E+05 |
| 15 | 27.7 | 28.9 | 1.009E+05 |
| 16 | 28.2 | 31.1 | 1.010E+05 |
| 17 | 28.5 | 32.2 | 1.010E+05 |
| 18 | 27.7 | 32.2 | 1.010E+05 |
| 19 | 26.4 | 32.8 | 1.009E+05 |
| 20 | 28.5 | 32.2 | 1.008E+05 |
| 21 | 27.8 | 32.8 | 1.008E+05 |
| 22 | 27.0 | 32.2 | 1.007E+05 |
| 23 | 27.7 | 32.2 | 1.007E+05 |
| 24 | 27.0 | 29.4 | 1.008E+05 |

**Table 9.2-23b Meteorological Conditions Which Maximize Water Usage (Worst 30-day)**

| Time (hr) | WBT (°C) | DBT (°C) | P (Pa) |
|---|---|---|---|
| 1 | 24.3 | 27.8 | 1.014E+05 |
| 2 | 24.1 | 29.4 | 1.015E+05 |
| 3 | 23.9 | 31.1 | 1.015E+05 |
| 4 | 23.6 | 32.2 | 1.014E+05 |
| 5 | 24.0 | 32.8 | 1.014E+05 |
| 6 | 23.7 | 35.0 | 1.014E+05 |
| 7 | 23.1 | 33.9 | 1.013E+05 |
| 8 | 23.7 | 32.8 | 1.013E+05 |
| 9 | 24.2 | 33.3 | 1.012E+05 |
| 10 | 23.9 | 32.2 | 1.012E+05 |
| 11 | 24.0 | 31.7 | 1.011E+05 |
| 12 | 23.4 | 29.4 | 1.011E+05 |
| 13 | 23.3 | 27.8 | 1.011E+05 |
| 14 | 22.9 | 26.7 | 1.011E+05 |
| 15 | 22.4 | 25.0 | 1.012E+05 |
| 16 | 22.4 | 25.0 | 1.012E+05 |
| 17 | 22.2 | 24.4 | 1.012E+05 |
| 18 | 22.0 | 23.9 | 1.012E+05 |
| 19 | 21.9 | 23.3 | 1.012E+05 |
| 20 | 21.0 | 22.8 | 1.012E+05 |
| 21 | 21.0 | 22.8 | 1.012E+05 |
| 22 | 21.3 | 22.8 | 1.012E+05 |
| 23 | 21.7 | 22.8 | 1.012E+05 |
| 24 | 22.8 | 23.9 | 1.012E+05 |
| 25 | 24.2 | 27.2 | 1.013E+05 |
| 26 | 23.9 | 28.9 | 1.013E+05 |
| 27 | 23.6 | 30.0 | 1.013E+05 |

**Table 9.2-23b Meteorological Conditions Which Maximize Water Usage (Worst 30-day) (Continued)**

| Time (hr) | WBT (°C) | DBT (°C) | P (Pa) |
|---|---|---|---|
| 28 | 23.9 | 32.2 | 1.012E+05 |
| 29 | 23.7 | 32.8 | 1.012E+05 |
| 30 | 24.2 | 33.3 | 1.011E+05 |
| 31 | 23.7 | 33.9 | 1.011E+05 |
| 32 | 23.8 | 34.4 | 1.010E+05 |
| 33 | 23.7 | 33.9 | 1.010E+05 |
| 34 | 23.5 | 33.3 | 1.010E+05 |
| 35 | 23.4 | 31.7 | 1.009E+05 |
| 36 | 22.8 | 29.4 | 1.010E+05 |
| 37 | 23.3 | 27.8 | 1.010E+05 |
| 38 | 23.1 | 26.1 | 1.010E+05 |
| 39 | 22.9 | 25.6 | 1.010E+05 |
| 40 | 22.8 | 25.0 | 1.010E+05 |
| 41 | 22.6 | 24.4 | 1.010E+05 |
| 42 | 22.9 | 24.4 | 1.010E+05 |
| 43 | 23.5 | 25.0 | 1.010E+05 |
| 44 | 23.5 | 25.0 | 1.010E+05 |
| 45 | 22.9 | 24.4 | 1.010E+05 |
| 46 | 22.9 | 24.4 | 1.010E+05 |
| 47 | 22.9 | 24.4 | 1.010E+05 |
| 48 | 23.5 | 25.0 | 1.011E+05 |
| 49 | 24.3 | 27.8 | 1.011E+05 |
| 50 | 24.1 | 29.4 | 1.011E+05 |
| 51 | 23.9 | 30.0 | 1.011E+05 |
| 52 | 23.9 | 32.2 | 1.011E+05 |
| 53 | 24.2 | 33.3 | 1.011E+05 |
| 54 | 24.0 | 33.9 | 1.011E+05 |
| 55 | 24.8 | 34.4 | 1.010E+05 |

**Table 9.2-23b Meteorological Conditions Which Maximize Water Usage (Worst 30-day) (Continued)**

| Time (hr) | WBT (°C) | DBT (°C) | P (Pa) |
|---|---|---|---|
| 56 | 24.6 | 33.9 | 1.010E+05 |
| 57 | 24.3 | 33.9 | 1.010E+05 |
| 58 | 23.9 | 32.2 | 1.010E+05 |
| 59 | 24.2 | 31.1 | 1.009E+05 |
| 60 | 23.4 | 29.4 | 1.010E+05 |
| 61 | 23.6 | 27.8 | 1.010E+05 |
| 62 | 23.6 | 26.7 | 1.011E+05 |
| 63 | 22.9 | 25.6 | 1.011E+05 |
| 64 | 22.8 | 25.0 | 1.011E+05 |
| 65 | 22.6 | 24.4 | 1.011E+05 |
| 66 | 22.6 | 24.4 | 1.011E+05 |
| 67 | 22.4 | 23.9 | 1.011E+05 |
| 68 | 21.9 | 23.3 | 1.012E+05 |
| 69 | 22.2 | 23.3 | 1.012E+05 |
| 70 | 21.3 | 22.8 | 1.012E+05 |
| 71 | 21.3 | 22.8 | 1.013E+05 |
| 72 | 23.5 | 25.0 | 1.013E+05 |
| 73 | 24.3 | 27.8 | 1.014E+05 |
| 74 | 24.4 | 29.4 | 1.014E+05 |
| 75 | 23.7 | 30.6 | 1.013E+05 |
| 76 | 23.9 | 32.2 | 1.013E+05 |
| 77 | 23.7 | 32.8 | 1.013E+05 |
| 78 | 23.7 | 33.9 | 1.013E+05 |
| 79 | 24.0 | 35.0 | 1.012E+05 |
| 80 | 24.1 | 35.6 | 1.011E+05 |
| 81 | 24.2 | 34.4 | 1.011E+05 |
| 82 | 24.3 | 33.9 | 1.011E+05 |
| 83 | 24.2 | 32.2 | 1.010E+05 |

**Table 9.2-23b Meteorological Conditions Which Maximize Water Usage (Worst 30-day) (Continued)**

| Time (hr) | WBT (°C) | DBT (°C) | P (Pa) |
|---|---|---|---|
| 84 | 23.6 | 30.0 | 1.010E+05 |
| 85 | 23.4 | 28.3 | 1.011E+05 |
| 86 | 23.1 | 27.2 | 1.012E+05 |
| 87 | 22.6 | 25.6 | 1.012E+05 |
| 88 | 22.4 | 25.0 | 1.013E+05 |
| 89 | 22.2 | 24.4 | 1.013E+05 |
| 90 | 22.2 | 24.4 | 1.013E+05 |
| 91 | 22.6 | 24.4 | 1.013E+05 |
| 92 | 22.6 | 24.4 | 1.012E+05 |
| 93 | 22.4 | 23.9 | 1.012E+05 |
| 94 | 21.9 | 23.3 | 1.013E+05 |
| 95 | 21.1 | 22.2 | 1.014E+05 |
| 96 | 22.2 | 23.3 | 1.014E+05 |
| 97 | 24.0 | 26.7 | 1.014E+05 |
| 98 | 24.8 | 29.4 | 1.014E+05 |
| 99 | 24.4 | 30.6 | 1.014E+05 |
| 100 | 24.2 | 32.2 | 1.014E+05 |
| 101 | 23.7 | 32.8 | 1.013E+05 |
| 102 | 23.4 | 33.9 | 1.013E+05 |
| 103 | 24.3 | 36.1 | 1.012E+05 |
| 104 | 24.2 | 33.3 | 1.012E+05 |
| 105 | 25.7 | 32.8 | 1.011E+05 |
| 106 | 24.7 | 30.6 | 1.011E+05 |
| 107 | 25.0 | 31.7 | 1.010E+05 |
| 108 | 24.6 | 30.0 | 1.011E+05 |
| 109 | 24.1 | 28.3 | 1.012E+05 |
| 110 | 23.6 | 26.7 | 1.013E+05 |
| 111 | 23.3 | 25.6 | 1.013E+05 |

**Table 9.2-23b Meteorological Conditions Which Maximize Water Usage (Worst 30-day) (Continued)**

| Time (hr) | WBT (°C) | DBT (°C) | P (Pa) |
|---|---|---|---|
| 112 | 23.3 | 25.6 | 1.013E+05 |
| 113 | 23.7 | 25.6 | 1.013E+05 |
| 114 | 23.1 | 25.0 | 1.013E+05 |
| 115 | 22.9 | 24.4 | 1.013E+05 |
| 116 | 22.9 | 24.4 | 1.013E+05 |
| 117 | 22.9 | 24.4 | 1.013E+05 |
| 118 | 22.9 | 24.4 | 1.013E+05 |
| 119 | 22.8 | 23.9 | 1.013E+05 |
| 120 | 24.2 | 26.1 | 1.013E+05 |
| 121 | 24.7 | 27.8 | 1.014E+05 |
| 122 | 24.6 | 30.0 | 1.014E+05 |
| 123 | 24.6 | 31.1 | 1.014E+05 |
| 124 | 24.4 | 31.7 | 1.014E+05 |
| 125 | 24.2 | 32.2 | 1.013E+05 |
| 126 | 24.4 | 31.7 | 1.013E+05 |
| 127 | 24.5 | 33.3 | 1.012E+05 |
| 128 | 24.3 | 32.8 | 1.012E+05 |
| 129 | 23.4 | 28.3 | 1.012E+05 |
| 130 | 23.6 | 28.9 | 1.011E+05 |
| 131 | 24.7 | 31.7 | 1.010E+05 |
| 132 | 24.2 | 30.0 | 1.011E+05 |
| 133 | 23.6 | 27.8 | 1.011E+05 |
| 134 | 23.6 | 26.7 | 1.012E+05 |
| 135 | 23.5 | 26.1 | 1.013E+05 |
| 136 | 22.8 | 25.0 | 1.012E+05 |
| 137 | 23.1 | 25.0 | 1.012E+05 |
| 138 | 23.1 | 25.0 | 1.012E+05 |
| 139 | 23.1 | 25.0 | 1.012E+05 |

**Table 9.2-23b Meteorological Conditions Which Maximize Water Usage (Worst 30-day) (Continued)**

| Time (hr) | WBT (°C) | DBT (°C) | P (Pa) |
|---|---|---|---|
| 140 | 22.0 | 23.9 | 1.012E+05 |
| 141 | 22.4 | 23.9 | 1.012E+05 |
| 142 | 21.7 | 22.8 | 1.012E+05 |
| 143 | 21.1 | 22.2 | 1.012E+05 |
| 144 | 23.3 | 24.4 | 1.013E+05 |
| 145 | 24.5 | 27.2 | 1.013E+05 |
| 146 | 24.3 | 28.9 | 1.013E+05 |
| 147 | 24.1 | 30.6 | 1.013E+05 |
| 148 | 24.7 | 32.8 | 1.013E+05 |
| 149 | 24.8 | 33.3 | 1.012E+05 |
| 150 | 24.2 | 33.3 | 1.011E+05 |
| 151 | 24.2 | 32.2 | 1.011E+05 |
| 152 | 24.8 | 33.3 | 1.010E+05 |
| 153 | 25.3 | 33.9 | 1.010E+05 |
| 154 | 25.3 | 33.9 | 1.010E+05 |
| 155 | 24.5 | 33.3 | 1.010E+05 |
| 156 | 23.2 | 30.0 | 1.010E+05 |
| 157 | 23.1 | 28.3 | 1.010E+05 |
| 158 | 23.3 | 26.7 | 1.011E+05 |
| 159 | 23.6 | 26.7 | 1.011E+05 |
| 160 | 23.8 | 26.1 | 1.012E+05 |
| 161 | 23.7 | 25.6 | 1.012E+05 |
| 162 | 23.5 | 25.0 | 1.011E+05 |
| 163 | 22.9 | 24.4 | 1.011E+05 |
| 164 | 22.9 | 24.4 | 1.011E+05 |
| 165 | 23.5 | 25.0 | 1.011E+05 |
| 166 | 22.9 | 24.4 | 1.012E+05 |
| 167 | 22.8 | 23.9 | 1.012E+05 |

**Table 9.2-23b Meteorological Conditions Which Maximize Water Usage (Worst 30-day) (Continued)**

| Time (hr) | WBT (°C) | DBT (°C) | P (Pa) |
|---|---|---|---|
| 168 | 23.7 | 25.6 | 1.013E+05 |
| 169 | 24.7 | 27.8 | 1.013E+05 |
| 170 | 24.4 | 29.4 | 1.013E+05 |
| 171 | 24.3 | 30.0 | 1.013E+05 |
| 172 | 24.6 | 31.1 | 1.013E+05 |
| 173 | 25.0 | 32.8 | 1.012E+05 |
| 174 | 25.3 | 33.9 | 1.012E+05 |
| 175 | 26.1 | 34.4 | 1.011E+05 |
| 176 | 25.4 | 34.4 | 1.010E+05 |
| 177 | 25.8 | 34.4 | 1.010E+05 |
| 178 | 25.1 | 33.3 | 1.010E+05 |
| 179 | 24.2 | 31.1 | 1.010E+05 |
| 180 | 23.9 | 30.0 | 1.011E+05 |
| 181 | 23.6 | 27.8 | 1.011E+05 |
| 182 | 23.8 | 27.2 | 1.011E+05 |
| 183 | 24.0 | 26.7 | 1.012E+05 |
| 184 | 23.3 | 25.6 | 1.012E+05 |
| 185 | 23.3 | 25.6 | 1.012E+05 |
| 186 | 23.1 | 25.0 | 1.011E+05 |
| 187 | 23.1 | 25.0 | 1.011E+05 |
| 188 | 23.1 | 25.0 | 1.011E+05 |
| 189 | 23.1 | 25.0 | 1.011E+05 |
| 190 | 22.9 | 24.4 | 1.012E+05 |
| 191 | 22.6 | 24.4 | 1.012E+05 |
| 192 | 23.8 | 26.1 | 1.012E+05 |
| 193 | 25.2 | 28.3 | 1.013E+05 |
| 194 | 24.6 | 30.0 | 1.013E+05 |
| 195 | 24.4 | 31.7 | 1.013E+05 |

**Table 9.2-23b Meteorological Conditions Which Maximize Water Usage (Worst 30-day) (Continued)**

| Time (hr) | WBT (°C) | DBT (°C) | P (Pa) |
|---|---|---|---|
| 196 | 24.5 | 32.2 | 1.013E+05 |
| 197 | 24.8 | 33.3 | 1.012E+05 |
| 198 | 25.1 | 34.4 | 1.011E+05 |
| 199 | 24.6 | 35.0 | 1.011E+05 |
| 200 | 24.0 | 35.0 | 1.011E+05 |
| 201 | 24.8 | 33.3 | 1.010E+05 |
| 202 | 24.5 | 33.3 | 1.010E+05 |
| 203 | 23.7 | 31.7 | 1.010E+05 |
| 204 | 23.9 | 30.0 | 1.010E+05 |
| 205 | 24.0 | 27.8 | 1.011E+05 |
| 206 | 24.2 | 27.2 | 1.011E+05 |
| 207 | 24.0 | 26.7 | 1.012E+05 |
| 208 | 24.0 | 26.7 | 1.012E+05 |
| 209 | 24.4 | 26.7 | 1.012E+05 |
| 210 | 24.2 | 26.1 | 1.012E+05 |
| 211 | 23.7 | 25.6 | 1.011E+05 |
| 212 | 23.7 | 25.6 | 1.011E+05 |
| 213 | 23.7 | 25.6 | 1.011E+05 |
| 214 | 23.7 | 25.6 | 1.012E+05 |
| 215 | 22.9 | 24.4 | 1.012E+05 |
| 216 | 24.4 | 26.7 | 1.013E+05 |
| 217 | 24.7 | 27.8 | 1.013E+05 |
| 218 | 24.9 | 30.0 | 1.013E+05 |
| 219 | 25.3 | 31.1 | 1.013E+05 |
| 220 | 25.0 | 32.8 | 1.013E+05 |
| 221 | 25.0 | 33.9 | 1.012E+05 |
| 222 | 25.8 | 34.4 | 1.012E+05 |
| 223 | 24.8 | 34.4 | 1.012E+05 |

**Table 9.2-23b Meteorological Conditions Which Maximize Water Usage (Worst 30-day) (Continued)**

| Time (hr) | WBT (°C) | DBT (°C) | P (Pa) |
|---|---|---|---|
| 224 | 25.4 | 34.4 | 1.011E+05 |
| 225 | 25.3 | 32.8 | 1.011E+05 |
| 226 | 25.0 | 32.8 | 1.011E+05 |
| 227 | 24.7 | 31.7 | 1.010E+05 |
| 228 | 24.2 | 30.0 | 1.011E+05 |
| 229 | 24.1 | 28.3 | 1.011E+05 |
| 230 | 24.2 | 27.2 | 1.012E+05 |
| 231 | 24.4 | 26.7 | 1.012E+05 |
| 232 | 24.4 | 26.7 | 1.012E+05 |
| 233 | 24.4 | 26.7 | 1.012E+05 |
| 234 | 23.7 | 25.6 | 1.012E+05 |
| 235 | 23.7 | 25.6 | 1.012E+05 |
| 236 | 23.1 | 25.0 | 1.011E+05 |
| 237 | 23.5 | 25.0 | 1.011E+05 |
| 238 | 22.4 | 23.9 | 1.011E+05 |
| 239 | 22.4 | 23.9 | 1.011E+05 |
| 240 | 24.0 | 25.6 | 1.012E+05 |
| 241 | 24.5 | 28.3 | 1.013E+05 |
| 242 | 24.1 | 29.4 | 1.013E+05 |
| 243 | 24.2 | 31.1 | 1.013E+05 |
| 244 | 24.2 | 32.2 | 1.013E+05 |
| 245 | 24.3 | 33.9 | 1.013E+05 |
| 246 | 23.9 | 34.4 | 1.012E+05 |
| 247 | 24.3 | 33.9 | 1.012E+05 |
| 248 | 24.6 | 33.9 | 1.011E+05 |
| 249 | 25.3 | 33.9 | 1.011E+05 |
| 250 | 24.5 | 32.2 | 1.010E+05 |
| 251 | 24.2 | 31.1 | 1.010E+05 |

**Table 9.2-23b Meteorological Conditions Which Maximize Water Usage (Worst 30-day) (Continued)**

| Time (hr) | WBT (°C) | DBT (°C) | P (Pa) |
|---|---|---|---|
| 252 | 24.6 | 30.0 | 1.010E+05 |
| 253 | 24.1 | 28.3 | 1.010E+05 |
| 254 | 23.8 | 27.2 | 1.011E+05 |
| 255 | 23.5 | 26.1 | 1.011E+05 |
| 256 | 23.3 | 25.6 | 1.011E+05 |
| 257 | 23.8 | 26.1 | 1.012E+05 |
| 258 | 23.7 | 25.6 | 1.011E+05 |
| 259 | 24.2 | 26.1 | 1.011E+05 |
| 260 | 23.7 | 25.6 | 1.011E+05 |
| 261 | 23.7 | 25.6 | 1.011E+05 |
| 262 | 23.5 | 25.0 | 1.010E+05 |
| 263 | 22.8 | 23.9 | 1.011E+05 |
| 264 | 24.0 | 25.6 | 1.012E+05 |
| 265 | 24.7 | 27.8 | 1.012E+05 |
| 266 | 24.6 | 30.0 | 1.012E+05 |
| 267 | 24.5 | 32.2 | 1.012E+05 |
| 268 | 23.9 | 34.4 | 1.012E+05 |
| 269 | 24.2 | 34.4 | 1.011E+05 |
| 270 | 24.5 | 34.4 | 1.011E+05 |
| 271 | 24.8 | 34.4 | 1.010E+05 |
| 272 | 25.3 | 33.9 | 1.009E+05 |
| 273 | 24.7 | 31.7 | 1.009E+05 |
| 274 | 24.2 | 31.1 | 1.009E+05 |
| 275 | 23.6 | 30.0 | 1.009E+05 |
| 276 | 23.6 | 28.9 | 1.009E+05 |
| 277 | 23.6 | 27.8 | 1.010E+05 |
| 278 | 23.3 | 26.7 | 1.010E+05 |
| 279 | 23.1 | 26.1 | 1.010E+05 |

**Table 9.2-23b Meteorological Conditions Which Maximize Water Usage (Worst 30-day) (Continued)**

| Time (hr) | WBT (°C) | DBT (°C) | P (Pa) |
|---|---|---|---|
| 280 | 22.2 | 24.4 | 1.011E+05 |
| 281 | 22.8 | 25.0 | 1.011E+05 |
| 282 | 22.9 | 24.4 | 1.011E+05 |
| 283 | 22.9 | 24.4 | 1.010E+05 |
| 284 | 22.9 | 24.4 | 1.011E+05 |
| 285 | 22.4 | 23.9 | 1.011E+05 |
| 286 | 22.9 | 24.4 | 1.011E+05 |
| 287 | 22.9 | 24.4 | 1.011E+05 |
| 288 | 23.7 | 25.6 | 1.012E+05 |
| 289 | 24.8 | 28.3 | 1.012E+05 |
| 290 | 25.1 | 30.6 | 1.012E+05 |
| 291 | 25.2 | 32.2 | 1.012E+05 |
| 292 | 25.0 | 33.9 | 1.010E+05 |
| 293 | 24.8 | 33.3 | 1.012E+05 |
| 294 | 25.3 | 35.0 | 1.011E+05 |
| 295 | 24.5 | 34.4 | 1.011E+05 |
| 296 | 24.9 | 36.1 | 1.010E+05 |
| 297 | 24.2 | 34.4 | 1.010E+05 |
| 298 | 24.6 | 33.9 | 1.009E+05 |
| 299 | 24.2 | 32.2 | 1.009E+05 |
| 300 | 24.4 | 30.6 | 1.009E+05 |
| 301 | 24.8 | 28.3 | 1.010E+05 |
| 302 | 24.7 | 27.8 | 1.011E+05 |
| 303 | 24.0 | 26.7 | 1.011E+05 |
| 304 | 23.8 | 26.1 | 1.012E+05 |
| 305 | 23.7 | 25.6 | 1.012E+05 |
| 306 | 23.7 | 25.6 | 1.011E+05 |
| 307 | 23.7 | 25.6 | 1.011E+05 |

**Table 9.2-23b Meteorological Conditions Which Maximize Water Usage (Worst 30-day) (Continued)**

| Time (hr) | WBT (°C) | DBT (°C) | P (Pa) |
|---|---|---|---|
| 308 | 23.7 | 25.6 | 1.011E+05 |
| 309 | 23.5 | 25.0 | 1.011E+05 |
| 310 | 23.3 | 24.4 | 1.012E+05 |
| 311 | 22.4 | 23.9 | 1.012E+05 |
| 312 | 22.9 | 24.4 | 1.013E+05 |
| 313 | 24.5 | 27.2 | 1.013E+05 |
| 314 | 24.4 | 29.4 | 1.013E+05 |
| 315 | 24.6 | 31.1 | 1.014E+05 |
| 316 | 24.2 | 33.3 | 1.013E+05 |
| 317 | 24.0 | 35.0 | 1.013E+05 |
| 318 | 24.0 | 36.1 | 1.012E+05 |
| 319 | 23.7 | 36.1 | 1.012E+05 |
| 320 | 24.1 | 35.6 | 1.011E+05 |
| 321 | 24.9 | 36.1 | 1.011E+05 |
| 322 | 23.9 | 33.3 | 1.011E+05 |
| 323 | 23.2 | 30.0 | 1.011E+05 |
| 324 | 24.2 | 30.0 | 1.011E+05 |
| 325 | 23.9 | 28.9 | 1.011E+05 |
| 326 | 24.1 | 28.3 | 1.012E+05 |
| 327 | 24.3 | 27.8 | 1.012E+05 |
| 328 | 23.6 | 26.7 | 1.012E+05 |
| 329 | 24.0 | 25.6 | 1.012E+05 |
| 330 | 23.3 | 25.6 | 1.012E+05 |
| 331 | 23.3 | 25.6 | 1.012E+05 |
| 332 | 23.3 | 25.6 | 1.012E+05 |
| 333 | 23.1 | 25.0 | 1.012E+05 |
| 334 | 23.1 | 25.0 | 1.012E+05 |
| 335 | 23.1 | 25.0 | 1.013E+05 |

**Table 9.2-23b Meteorological Conditions Which Maximize Water Usage (Worst 30-day) (Continued)**

| Time (hr) | WBT (°C) | DBT (°C) | P (Pa) |
|---|---|---|---|
| 336 | 23.7 | 25.6 | 1.013E+05 |
| 337 | 24.2 | 27.2 | 1.013E+05 |
| 338 | 24.5 | 28.3 | 1.013E+05 |
| 339 | 23.1 | 30.6 | 1.014E+05 |
| 340 | 23.6 | 31.1 | 1.014E+05 |
| 341 | 23.4 | 30.6 | 1.014E+05 |
| 342 | 24.9 | 27.2 | 1.014E+05 |
| 343 | 23.6 | 28.9 | 1.013E+05 |
| 344 | 23.9 | 32.2 | 1.012E+05 |
| 345 | 23.6 | 32.2 | 1.012E+05 |
| 346 | 23.6 | 32.2 | 1.011E+05 |
| 347 | 23.1 | 31.7 | 1.011E+05 |
| 348 | 23.1 | 31.7 | 1.011E+05 |
| 349 | 23.8 | 29.4 | 1.012E+05 |
| 350 | 23.6 | 27.8 | 1.012E+05 |
| 351 | 23.1 | 27.2 | 1.012E+05 |
| 352 | 23.1 | 27.2 | 1.013E+05 |
| 353 | 23.1 | 26.1 | 1.012E+05 |
| 354 | 23.5 | 26.1 | 1.012E+05 |
| 355 | 23.3 | 25.6 | 1.012E+05 |
| 356 | 23.7 | 25.6 | 1.012E+05 |
| 357 | 23.5 | 25.0 | 1.012E+05 |
| 358 | 23.5 | 25.0 | 1.012E+05 |
| 359 | 23.1 | 23.9 | 1.013E+05 |
| 360 | 23.7 | 25.6 | 1.013E+05 |
| 361 | 24.8 | 28.3 | 1.014E+05 |
| 362 | 24.9 | 30.0 | 1.014E+05 |
| 363 | 23.2 | 31.1 | 1.014E+05 |

**Table 9.2-23b Meteorological Conditions Which Maximize Water Usage (Worst 30-day) (Continued)**

| Time (hr) | WBT (°C) | DBT (°C) | P (Pa) |
|---|---|---|---|
| 364 | 24.5 | 33.3 | 1.013E+05 |
| 365 | 24.2 | 33.3 | 1.013E+05 |
| 366 | 23.7 | 32.8 | 1.012E+05 |
| 367 | 23.4 | 35.0 | 1.011E+05 |
| 368 | 23.4 | 36.1 | 1.010E+05 |
| 369 | 24.1 | 35.6 | 1.010E+05 |
| 370 | 24.9 | 35.0 | 1.010E+05 |
| 371 | 25.0 | 33.9 | 1.009E+05 |
| 372 | 23.9 | 31.1 | 1.010E+05 |
| 373 | 23.4 | 29.4 | 1.011E+05 |
| 374 | 24.5 | 28.3 | 1.011E+05 |
| 375 | 24.3 | 27.8 | 1.012E+05 |
| 376 | 24.2 | 27.2 | 1.012E+05 |
| 377 | 24.4 | 26.7 | 1.012E+05 |
| 378 | 24.4 | 26.7 | 1.012E+05 |
| 379 | 24.2 | 26.1 | 1.011E+05 |
| 380 | 24.2 | 26.1 | 1.011E+05 |
| 381 | 24.0 | 25.6 | 1.011E+05 |
| 382 | 24.0 | 25.6 | 1.011E+05 |
| 383 | 24.0 | 25.6 | 1.012E+05 |
| 384 | 24.2 | 26.1 | 1.013E+05 |
| 385 | 24.7 | 27.8 | 1.014E+05 |
| 386 | 24.8 | 29.4 | 1.014E+05 |
| 387 | 24.9 | 31.1 | 1.014E+05 |
| 388 | 24.9 | 32.2 | 1.013E+05 |
| 389 | 24.2 | 33.3 | 1.013E+05 |
| 390 | 24.2 | 34.4 | 1.012E+05 |
| 391 | 24.2 | 35.6 | 1.012E+05 |

**Table 9.2-23b Meteorological Conditions Which Maximize Water Usage (Worst 30-day) (Continued)**

| Time (hr) | WBT (°C) | DBT (°C) | P (Pa) |
|---|---|---|---|
| 392 | 23.8 | 35.6 | 1.011E+05 |
| 393 | 24.6 | 35.0 | 1.010E+05 |
| 394 | 25.1 | 34.4 | 1.010E+05 |
| 395 | 25.3 | 33.9 | 1.010E+05 |
| 396 | 24.6 | 31.1 | 1.010E+05 |
| 397 | 24.4 | 29.4 | 1.010E+05 |
| 398 | 24.8 | 28.3 | 1.011E+05 |
| 399 | 24.7 | 27.8 | 1.012E+05 |
| 400 | 24.4 | 26.7 | 1.012E+05 |
| 401 | 24.4 | 26.7 | 1.012E+05 |
| 402 | 23.3 | 26.7 | 1.012E+05 |
| 403 | 24.7 | 26.7 | 1.012E+05 |
| 404 | 24.7 | 26.7 | 1.012E+05 |
| 405 | 24.6 | 26.1 | 1.012E+05 |
| 406 | 24.4 | 25.6 | 1.012E+05 |
| 407 | 24.4 | 25.6 | 1.013E+05 |
| 408 | 24.6 | 26.1 | 1.013E+05 |
| 409 | 25.1 | 27.8 | 1.014E+05 |
| 410 | 24.6 | 28.9 | 1.014E+05 |
| 411 | 24.4 | 30.6 | 1.014E+05 |
| 412 | 24.0 | 32.8 | 1.014E+05 |
| 413 | 24.2 | 33.3 | 1.014E+05 |
| 414 | 24.2 | 34.4 | 1.013E+05 |
| 415 | 24.9 | 36.1 | 1.012E+05 |
| 416 | 24.8 | 35.6 | 1.012E+05 |
| 417 | 24.2 | 35.6 | 1.012E+05 |
| 418 | 23.7 | 35.0 | 1.012E+05 |
| 419 | 23.9 | 33.3 | 1.012E+05 |

**Table 9.2-23b Meteorological Conditions Which Maximize Water Usage (Worst 30-day) (Continued)**

| Time (hr) | WBT (°C) | DBT (°C) | P (Pa) |
|---|---|---|---|
| 420 | 24.6 | 31.1 | 1.011E+05 |
| 421 | 25.0 | 28.9 | 1.012E+05 |
| 422 | 24.5 | 28.3 | 1.013E+05 |
| 423 | 24.2 | 27.2 | 1.013E+05 |
| 424 | 24.4 | 26.7 | 1.013E+05 |
| 425 | 24.5 | 27.2 | 1.013E+05 |
| 426 | 24.9 | 27.2 | 1.014E+05 |
| 427 | 24.4 | 26.7 | 1.013E+05 |
| 428 | 24.6 | 26.1 | 1.013E+05 |
| 429 | 24.6 | 26.1 | 1.014E+05 |
| 430 | 24.6 | 26.1 | 1.014E+05 |
| 431 | 24.0 | 25.6 | 1.014E+05 |
| 432 | 24.7 | 26.7 | 1.015E+05 |
| 433 | 25.4 | 28.9 | 1.015E+05 |
| 434 | 25.3 | 30.0 | 1.015E+05 |
| 435 | 25.1 | 31.7 | 1.015E+05 |
| 436 | 24.2 | 33.3 | 1.015E+05 |
| 437 | 24.6 | 35.0 | 1.014E+05 |
| 438 | 24.3 | 36.1 | 1.014E+05 |
| 439 | 24.2 | 35.6 | 1.014E+05 |
| 440 | 24.5 | 35.6 | 1.013E+05 |
| 441 | 24.9 | 35.0 | 1.013E+05 |
| 442 | 24.6 | 33.9 | 1.013E+05 |
| 443 | 24.7 | 32.8 | 1.012E+05 |
| 444 | 24.1 | 30.6 | 1.013E+05 |
| 445 | 24.6 | 28.9 | 1.013E+05 |
| 446 | 24.8 | 28.3 | 1.013E+05 |
| 447 | 24.2 | 27.2 | 1.013E+05 |

**Table 9.2-23b Meteorological Conditions Which Maximize Water Usage (Worst 30-day) (Continued)**

| Time (hr) | WBT (°C) | DBT (°C) | P (Pa) |
|---|---|---|---|
| 448 | 24.7 | 26.7 | 1.014E+05 |
| 449 | 24.4 | 26.7 | 1.013E+05 |
| 450 | 24.7 | 26.7 | 1.013E+05 |
| 451 | 24.2 | 26.1 | 1.014E+05 |
| 452 | 24.0 | 25.6 | 1.014E+05 |
| 453 | 24.0 | 25.6 | 1.014E+05 |
| 454 | 24.0 | 25.6 | 1.014E+05 |
| 455 | 23.1 | 25.0 | 1.015E+05 |
| 456 | 24.6 | 26.1 | 1.015E+05 |
| 457 | 25.4 | 28.9 | 1.015E+05 |
| 458 | 24.4 | 30.6 | 1.015E+05 |
| 459 | 24.4 | 32.8 | 1.015E+05 |
| 460 | 24.5 | 34.4 | 1.015E+05 |
| 461 | 23.9 | 34.4 | 1.014E+05 |
| 462 | 23.4 | 35.0 | 1.014E+05 |
| 463 | 22.6 | 36.1 | 1.013E+05 |
| 464 | 23.1 | 36.1 | 1.013E+05 |
| 465 | 24.6 | 35.0 | 1.012E+05 |
| 466 | 25.0 | 33.9 | 1.012E+05 |
| 467 | 25.2 | 32.2 | 1.012E+05 |
| 468 | 24.9 | 30.0 | 1.012E+05 |
| 469 | 25.2 | 29.4 | 1.012E+05 |
| 470 | 24.8 | 28.3 | 1.013E+05 |
| 471 | 24.7 | 27.8 | 1.013E+05 |
| 472 | 24.9 | 27.2 | 1.013E+05 |
| 473 | 24.9 | 27.2 | 1.013E+05 |
| 474 | 24.9 | 27.2 | 1.013E+05 |
| 475 | 24.7 | 26.7 | 1.013E+05 |

**Table 9.2-23b Meteorological Conditions Which Maximize Water Usage (Worst 30-day) (Continued)**

| Time (hr) | WBT (°C) | DBT (°C) | P (Pa) |
|---|---|---|---|
| 476 | 24.7 | 26.7 | 1.013E+05 |
| 477 | 24.4 | 25.6 | 1.013E+05 |
| 478 | 23.9 | 25.0 | 1.013E+05 |
| 479 | 23.5 | 25.0 | 1.014E+05 |
| 480 | 24.7 | 26.7 | 1.014E+05 |
| 481 | 25.2 | 28.3 | 1.014E+05 |
| 482 | 24.8 | 30.6 | 1.014E+05 |
| 483 | 24.9 | 32.2 | 1.014E+05 |
| 484 | 24.8 | 33.3 | 1.014E+05 |
| 485 | 24.2 | 34.4 | 1.013E+05 |
| 486 | 24.2 | 35.6 | 1.012E+05 |
| 487 | 25.7 | 36.7 | 1.011E+05 |
| 488 | 25.4 | 35.6 | 1.011E+05 |
| 489 | 25.4 | 35.6 | 1.012E+05 |
| 490 | 24.2 | 34.4 | 1.010E+05 |
| 491 | 23.2 | 33.3 | 1.010E+05 |
| 492 | 24.4 | 30.6 | 1.010E+05 |
| 493 | 25.5 | 29.4 | 1.010E+05 |
| 494 | 25.6 | 28.3 | 1.011E+05 |
| 495 | 25.0 | 27.8 | 1.012E+05 |
| 496 | 24.9 | 27.2 | 1.012E+05 |
| 497 | 24.9 | 27.2 | 1.012E+05 |
| 498 | 24.7 | 26.7 | 1.012E+05 |
| 499 | 24.2 | 26.1 | 1.011E+05 |
| 500 | 24.2 | 26.1 | 1.011E+05 |
| 501 | 24.2 | 26.1 | 1.011E+05 |
| 502 | 24.0 | 25.6 | 1.011E+05 |
| 503 | 24.0 | 25.6 | 1.012E+05 |

**Table 9.2-23b Meteorological Conditions Which Maximize Water Usage (Worst 30-day) (Continued)**

| Time (hr) | WBT (°C) | DBT (°C) | P (Pa) |
|---|---|---|---|
| 504 | 24.6 | 26.1 | 1.012E+05 |
| 505 | 25.4 | 28.9 | 1.012E+05 |
| 506 | 25.3 | 30.0 | 1.013E+05 |
| 507 | 25.1 | 31.7 | 1.013E+05 |
| 508 | 25.2 | 33.3 | 1.013E+05 |
| 509 | 24.8 | 35.6 | 1.012E+05 |
| 510 | 24.8 | 35.6 | 1.012E+05 |
| 511 | 24.8 | 35.6 | 1.011E+05 |
| 512 | 25.1 | 35.6 | 1.011E+05 |
| 513 | 25.5 | 36.1 | 1.010E+05 |
| 514 | 24.9 | 35.0 | 1.010E+05 |
| 515 | 24.8 | 33.3 | 1.010E+05 |
| 516 | 24.9 | 31.1 | 1.010E+05 |
| 517 | 25.5 | 29.4 | 1.011E+05 |
| 518 | 24.8 | 28.3 | 1.012E+05 |
| 519 | 24.5 | 27.2 | 1.013E+05 |
| 520 | 24.7 | 26.7 | 1.013E+05 |
| 521 | 24.7 | 26.7 | 1.013E+05 |
| 522 | 24.7 | 26.7 | 1.012E+05 |
| 523 | 24.2 | 26.1 | 1.012E+05 |
| 524 | 24.6 | 26.1 | 1.012E+05 |
| 525 | 24.6 | 26.1 | 1.012E+05 |
| 526 | 24.4 | 25.6 | 1.013E+05 |
| 527 | 24.6 | 26.1 | 1.013E+05 |
| 528 | 24.7 | 26.7 | 1.014E+05 |
| 529 | 25.1 | 27.8 | 1.014E+05 |
| 530 | 25.3 | 30.0 | 1.014E+05 |
| 531 | 25.5 | 32.2 | 1.014E+05 |

**Table 9.2-23b Meteorological Conditions Which Maximize Water Usage (Worst 30-day) (Continued)**

| Time (hr) | WBT (°C) | DBT (°C) | P (Pa) |
|---|---|---|---|
| 532 | 24.5 | 34.4 | 1.014E+05 |
| 533 | 24.8 | 34.4 | 1.014E+05 |
| 534 | 24.9 | 36.1 | 1.013E+05 |
| 535 | 24.3 | 35.0 | 1.013E+05 |
| 536 | 24.3 | 35.0 | 1.012E+05 |
| 537 | 25.1 | 35.6 | 1.012E+05 |
| 538 | 24.5 | 34.4 | 1.012E+05 |
| 539 | 24.2 | 33.3 | 1.012E+05 |
| 540 | 24.2 | 31.1 | 1.012E+05 |
| 541 | 25.2 | 29.4 | 1.013E+05 |
| 542 | 25.4 | 28.9 | 1.014E+05 |
| 543 | 25.1 | 27.8 | 1.014E+05 |
| 544 | 24.9 | 27.2 | 1.014E+05 |
| 545 | 25.3 | 27.2 | 1.014E+05 |
| 546 | 24.9 | 27.2 | 1.014E+05 |
| 547 | 24.7 | 26.7 | 1.014E+05 |
| 548 | 24.7 | 26.7 | 1.014E+05 |
| 549 | 24.7 | 26.7 | 1.014E+05 |
| 550 | 24.6 | 26.1 | 1.015E+05 |
| 551 | 23.9 | 25.0 | 1.015E+05 |
| 552 | 24.7 | 26.7 | 1.015E+05 |
| 553 | 25.7 | 28.9 | 1.016E+05 |
| 554 | 25.5 | 30.6 | 1.016E+05 |
| 555 | 24.9 | 32.2 | 1.016E+05 |
| 556 | 24.5 | 33.3 | 1.016E+05 |
| 557 | 24.3 | 33.9 | 1.015E+05 |
| 558 | 24.5 | 35.6 | 1.014E+05 |
| 559 | 24.2 | 35.6 | 1.014E+05 |

**Table 9.2-23b Meteorological Conditions Which Maximize Water Usage (Worst 30-day) (Continued)**

| Time (hr) | WBT (°C) | DBT (°C) | P (Pa) |
|---|---|---|---|
| 560 | 24.0 | 35.0 | 1.013E+05 |
| 561 | 24.6 | 35.0 | 1.012E+05 |
| 562 | 24.9 | 35.0 | 1.012E+05 |
| 563 | 24.2 | 33.3 | 1.012E+05 |
| 564 | 24.7 | 30.6 | 1.012E+05 |
| 565 | 24.8 | 29.4 | 1.012E+05 |
| 566 | 24.8 | 28.3 | 1.013E+05 |
| 567 | 24.7 | 27.8 | 1.013E+05 |
| 568 | 24.9 | 27.2 | 1.014E+05 |
| 569 | 24.5 | 27.2 | 1.014E+05 |
| 570 | 24.4 | 26.7 | 1.013E+05 |
| 571 | 24.7 | 26.7 | 1.013E+05 |
| 572 | 24.7 | 26.7 | 1.013E+05 |
| 573 | 24.6 | 26.1 | 1.012E+05 |
| 574 | 24.4 | 25.6 | 1.013E+05 |
| 575 | 24.4 | 25.6 | 1.013E+05 |
| 576 | 24.6 | 26.1 | 1.013E+05 |
| 577 | 25.2 | 28.3 | 1.014E+05 |
| 578 | 25.1 | 30.6 | 1.014E+05 |
| 579 | 25.2 | 32.2 | 1.014E+05 |
| 580 | 24.5 | 33.3 | 1.014E+05 |
| 581 | 24.2 | 34.4 | 1.013E+05 |
| 582 | 24.5 | 35.6 | 1.013E+05 |
| 583 | 23.9 | 36.7 | 1.012E+05 |
| 584 | 24.5 | 35.6 | 1.011E+05 |
| 585 | 25.3 | 35.0 | 1.011E+05 |
| 586 | 24.5 | 34.4 | 1.010E+05 |
| 587 | 24.5 | 33.3 | 1.010E+05 |

**Table 9.2-23b Meteorological Conditions Which Maximize Water Usage (Worst 30-day) (Continued)**

| Time (hr) | WBT (°C) | DBT (°C) | P (Pa) |
|---|---|---|---|
| 588 | 23.1 | 30.6 | 1.010E+05 |
| 589 | 23.7 | 29.4 | 1.011E+05 |
| 590 | 24.0 | 27.8 | 1.011E+05 |
| 591 | 24.2 | 27.2 | 1.012E+05 |
| 592 | 24.0 | 26.7 | 1.012E+05 |
| 593 | 24.0 | 26.7 | 1.012E+05 |
| 594 | 24.4 | 26.7 | 1.012E+05 |
| 595 | 24.4 | 26.7 | 1.011E+05 |
| 596 | 24.0 | 25.6 | 1.011E+05 |
| 597 | 24.0 | 25.6 | 1.011E+05 |
| 598 | 23.7 | 25.6 | 1.011E+05 |
| 599 | 23.3 | 24.4 | 1.012E+05 |
| 600 | 24.4 | 26.7 | 1.012E+05 |
| 601 | 25.4 | 28.9 | 1.012E+05 |
| 602 | 24.8 | 30.6 | 1.013E+05 |
| 603 | 24.7 | 31.7 | 1.012E+05 |
| 604 | 24.5 | 32.2 | 1.012E+05 |
| 605 | 25.1 | 34.4 | 1.012E+05 |
| 606 | 24.6 | 35.0 | 1.011E+05 |
| 607 | 24.9 | 36.1 | 1.011E+05 |
| 608 | 24.6 | 36.1 | 1.010E+05 |
| 609 | 24.9 | 35.0 | 1.010E+05 |
| 610 | 24.9 | 35.0 | 1.010E+05 |
| 611 | 24.7 | 32.8 | 1.010E+05 |
| 612 | 24.2 | 31.1 | 1.010E+05 |
| 613 | 24.1 | 29.4 | 1.011E+05 |
| 614 | 24.6 | 28.9 | 1.011E+05 |
| 615 | 24.3 | 27.8 | 1.011E+05 |

**Table 9.2-23b Meteorological Conditions Which Maximize Water Usage (Worst 30-day) (Continued)**

| Time (hr) | WBT (°C) | DBT (°C) | P (Pa) |
|---|---|---|---|
| 616 | 24.3 | 27.8 | 1.012E+05 |
| 617 | 24.5 | 27.2 | 1.012E+05 |
| 618 | 24.7 | 27.8 | 1.011E+05 |
| 619 | 24.5 | 27.2 | 1.011E+05 |
| 620 | 24.4 | 26.7 | 1.011E+05 |
| 621 | 24.4 | 26.7 | 1.011E+05 |
| 622 | 24.2 | 26.1 | 1.011E+05 |
| 623 | 23.7 | 25.6 | 1.012E+05 |
| 624 | 24.4 | 26.7 | 1.012E+05 |
| 625 | 25.4 | 28.9 | 1.013E+05 |
| 626 | 25.2 | 29.4 | 1.013E+05 |
| 627 | 24.6 | 31.1 | 1.013E+05 |
| 628 | 24.5 | 28.3 | 1.013E+05 |
| 629 | 25.5 | 33.3 | 1.012E+05 |
| 630 | 24.8 | 34.4 | 1.012E+05 |
| 631 | 24.8 | 33.3 | 1.011E+05 |
| 632 | 24.9 | 35.0 | 1.011E+05 |
| 633 | 24.3 | 35.0 | 1.011E+05 |
| 634 | 24.5 | 33.3 | 1.011E+05 |
| 635 | 24.2 | 32.2 | 1.011E+05 |
| 636 | 24.4 | 30.6 | 1.011E+05 |
| 637 | 24.3 | 28.9 | 1.011E+05 |
| 638 | 24.5 | 28.3 | 1.011E+05 |
| 639 | 24.7 | 27.8 | 1.012E+05 |
| 640 | 24.5 | 27.2 | 1.012E+05 |
| 641 | 24.4 | 26.7 | 1.012E+05 |
| 642 | 24.0 | 25.6 | 1.012E+05 |
| 643 | 24.2 | 26.1 | 1.012E+05 |

**Table 9.2-23b Meteorological Conditions Which Maximize Water Usage (Worst 30-day) (Continued)**

| Time (hr) | WBT (°C) | DBT (°C) | P (Pa) |
|---|---|---|---|
| 644 | 24.0 | 25.6 | 1.012E+05 |
| 645 | 23.9 | 25.0 | 1.012E+05 |
| 646 | 23.5 | 25.0 | 1.012E+05 |
| 647 | 23.3 | 24.4 | 1.013E+05 |
| 648 | 24.0 | 25.6 | 1.013E+05 |
| 649 | 25.2 | 28.3 | 1.014E+05 |
| 650 | 24.9 | 30.0 | 1.014E+05 |
| 651 | 24.9 | 32.2 | 1.014E+05 |
| 652 | 25.0 | 33.9 | 1.014E+05 |
| 653 | 24.3 | 35.0 | 1.013E+05 |
| 654 | 23.4 | 36.1 | 1.013E+05 |
| 655 | 24.2 | 35.6 | 1.013E+05 |
| 656 | 24.8 | 34.4 | 1.012E+05 |
| 657 | 23.7 | 35.0 | 1.012E+05 |
| 658 | 23.1 | 33.9 | 1.012E+05 |
| 659 | 24.5 | 32.2 | 1.012E+05 |
| 660 | 24.1 | 30.6 | 1.012E+05 |
| 661 | 24.3 | 28.9 | 1.012E+05 |
| 662 | 24.3 | 27.8 | 1.012E+05 |
| 663 | 24.5 | 27.2 | 1.013E+05 |
| 664 | 24.4 | 26.7 | 1.014E+05 |
| 665 | 23.8 | 26.1 | 1.014E+05 |
| 666 | 23.1 | 25.0 | 1.014E+05 |
| 667 | 22.9 | 24.4 | 1.014E+05 |
| 668 | 22.6 | 24.4 | 1.014E+05 |
| 669 | 21.9 | 23.3 | 1.014E+05 |
| 670 | 21.9 | 23.3 | 1.014E+05 |
| 671 | 21.7 | 22.8 | 1.015E+05 |

**Table 9.2-23b Meteorological Conditions Which Maximize Water Usage (Worst 30-day) (Continued)**

| Time (hr) | WBT (°C) | DBT (°C) | P (Pa) |
|---|---|---|---|
| 672 | 22.6 | 24.4 | 1.015E+05 |
| 673 | 24.4 | 26.7 | 1.016E+05 |
| 674 | 24.8 | 29.4 | 1.016E+05 |
| 675 | 24.4 | 30.6 | 1.016E+05 |
| 676 | 24.2 | 32.2 | 1.016E+05 |
| 677 | 24.3 | 35.0 | 1.015E+05 |
| 678 | 23.0 | 35.6 | 1.015E+05 |
| 679 | 23.4 | 36.1 | 1.014E+05 |
| 680 | 24.3 | 36.1 | 1.014E+05 |
| 681 | 24.7 | 36.7 | 1.013E+05 |
| 682 | 22.9 | 36.1 | 1.013E+05 |
| 683 | 22.0 | 35.0 | 1.013E+05 |
| 684 | 22.9 | 32.2 | 1.013E+05 |
| 685 | 23.2 | 30.0 | 1.013E+05 |
| 686 | 23.4 | 28.3 | 1.013E+05 |
| 687 | 23.1 | 27.2 | 1.013E+05 |
| 688 | 22.8 | 26.1 | 1.013E+05 |
| 689 | 22.8 | 26.1 | 1.014E+05 |
| 690 | 23.1 | 26.1 | 1.013E+05 |
| 691 | 22.9 | 25.6 | 1.013E+05 |
| 692 | 22.6 | 24.4 | 1.013E+05 |
| 693 | 22.4 | 23.9 | 1.013E+05 |
| 694 | 21.9 | 23.3 | 1.014E+05 |
| 695 | 21.9 | 23.3 | 1.014E+05 |
| 696 | 23.1 | 25.0 | 1.014E+05 |
| 697 | 24.2 | 27.2 | 1.014E+05 |
| 698 | 24.4 | 29.4 | 1.014E+05 |
| 699 | 23.9 | 32.2 | 1.014E+05 |

**Table 9.2-23b Meteorological Conditions Which Maximize Water Usage (Worst 30-day) (Continued)**

| Time (hr) | WBT (°C) | DBT (°C) | P (Pa) |
|---|---|---|---|
| 700 | 23.7 | 32.8 | 1.014E+05 |
| 701 | 23.7 | 33.9 | 1.013E+05 |
| 702 | 23.0 | 35.6 | 1.012E+05 |
| 703 | 22.6 | 36.1 | 1.012E+05 |
| 704 | 22.1 | 36.1 | 1.011E+05 |
| 705 | 23.1 | 36.1 | 1.011E+05 |
| 706 | 23.1 | 36.1 | 1.010E+05 |
| 707 | 23.9 | 33.3 | 1.010E+05 |
| 708 | 23.4 | 31.7 | 1.011E+05 |
| 709 | 23.4 | 29.4 | 1.011E+05 |
| 710 | 23.9 | 28.9 | 1.011E+05 |
| 711 | 24.0 | 27.8 | 1.011E+05 |
| 712 | 24.3 | 27.8 | 1.012E+05 |
| 713 | 24.2 | 27.2 | 1.012E+05 |
| 714 | 23.8 | 27.2 | 1.011E+05 |
| 715 | 23.6 | 26.7 | 1.011E+05 |
| 716 | 23.5 | 26.1 | 1.011E+05 |
| 717 | 23.5 | 26.1 | 1.011E+05 |
| 718 | 23.8 | 26.1 | 1.011E+05 |
| 719 | 23.8 | 26.1 | 1.011E+05 |
| 720 | 23.8 | 26.1 | 1.011E+05 |

**Table 9.2-24 UHS Basin Water Maximum Temperature (Worst 1-Day)**

| Time (hr) | WBT (°C) | DBT (°C) | Heat Load (HL) (MW) | Water Mass Evap. After DBA (kg) | Daily Mass Evap. Rate After DBA (kg/hr) | Basin Temp (°C) |
|---|---|---|---|---|---|---|
| 0 | 27.9 | 30.0 | 4.60E+03 | 0.00E+00 | — | 32.2 |
| 1 | 27.7 | 28.9 | 1.32E+02 | 1.81E=05 | 1.81E+05 | 32.7 |
| 2 | 27.4 | 27.8 | 1.18E+02 | 3.18E+05 | — | 32.9 |
| 3 | 27.2 | 27.2 | 1.12E+02 | 4.54E+05 | — | 33.0 |
| 4 | 27.2 | 27.2 | 1.09E+02 | 5.44E+05 | — | 33.1 |
| 5 | 26.4 | 27.2 | 1.06E+02 | 6.80E+05 | — | 33.1 |
| 6 | 26.3 | 26.7 | 1.04E+02 | 8.16E+05 | — | 33.0 |
| 7 | 26.4 | 27.2 | 1.03E+02 | 9.53E+05 | — | 32.9 |
| 8 | 26.1 | 26.1 | 1.01E+02 | 1.09E+06 | — | 32.9 |
| 9 | 26.1 | 26.1 | 1.00E+02 | 1.22E+06 | — | 32.8 |
| 10 | 26.1 | 26.1 | 9.87E+01 | 1.36E+06 | — | 32.7 |
| 11 | 26.1 | 26.1 | 9.74E+01 | 1.45E+06 | — | 32.7 |
| 12 | 25.6 | 25.6 | 9.67E+01 | 1.59E+06 | — | 32.6 |
| 13 | 26.1 | 26.1 | 9.61E+01 | 1.72E+06 | — | 32.5 |
| 14 | 27.2 | 27.2 | 9.55E+01 | 1.81E+06 | — | 32.5 |
| 15 | 27.7 | 28.9 | 9.48E+01 | 1.95E+06 | — | 32.16 |
| 16 | 28.2 | 31.1 | 9.42E+01 | 2.04E+06 | — | 32.7 |
| 17 | 28.5 | 32.2 | 9.37E+01 | 2.18E+06 | — | 32.8 |
| 18 | 27.7 | 32.2 | 9.33E+01 | 2.27E+06 | — | 32.9 |
| 19 | 26.4 | 32.8 | 9.29E+01 | 2.40E+06 | — | 32.8 |
| 20 | 28.5 | 32.2 | 9.26E+01 | 2.54E+06 | — | 32.8 |
| 21 | 27.8 | 32.8 | 9.22E+01 | 2.68E+06 | — | 32.9 |
| 22 | 26.9 | 32.2 | 9.19E+01 | 2.81E+06 | — | 32.9 |
| 23 | 27.7 | 32.2 | 9.15E+01 | 2.90E+06 | — | 32.9 |
| 24 | 27.0 | 29.4 | 9.11E+01 | 3.04E+06 | 1.27E+05 | 32.9 |

## Table 9.2-25 UHS Basin Water Maximum Temperature (Case D1)

| Time (hr) | Time (Days) | WBT (°C) | DBT (°C) | Heat Load (MW) | Water Mass Evap. After DBA (kg) | Daily Mass Evap. Rate After DBA (kg/hr) | Basin Temp (°C) |
|---|---|---|---|---|---|---|---|
| 0 | 0 | 24.6 | 26.1 | 4.60E+03 | 0 | — | 32.2 |
| 1 | | 24.3 | 27.8 | 1.32E+02 | 2.27E+05 | 2.27E+05 | 32.3 |
| 2 | | 24.1 | 29.4 | 1.18E+02 | 4.08E+05 | — | 32.2 |
| 3 | | 23.9 | 31.1 | 1.12E+02 | 5.90E+05 | — | 32.0 |
| 4 | | 23.6 | 32.2 | 1.09E+02 | 7.71E+05 | — | 31.8 |
| 5 | | 24.1 | 32.8 | 1.06E+02 | 9.53E+05 | — | 31.6 |
| 6 | | 23.7 | 35.0 | 1.04E+02 | 1.13E+06 | — | 31.4 |
| 7 | | 23.1 | 33.9 | 1.03E+02 | 1.32E+06 | — | 31.3 |
| 8 | | 23.7 | 32.8 | 1.01E+02 | 1.50E+06 | — | 31.1 |
| 9 | | 24.2 | 33.3 | 1.00E+02 | 1.68E+06 | — | 31.0 |
| 10 | | 23.9 | 32.2 | 9.87E+01 | 1.81E+06 | — | 30.9 |
| 11 | | 24.1 | 31.7 | 9.74E+01 | 2.00E+06 | — | 30.8 |
| 12 | | 23.4 | 29.4 | 9.67E+01 | 2.13E+06 | — | 30.7 |
| 13 | | 23.3 | 27.8 | 9.61E+01 | 2.31E+06 | — | 30.6 |
| 14 | | 22.9 | 26.7 | 9.55E+01 | 2.45E+06 | — | 30.4 |
| 15 | | 22.4 | 25.0 | 9.48E+01 | 2.59E+06 | — | 30.2 |
| 16 | | 22.4 | 25.0 | 9.42E+01 | 2.72E+06 | — | 30.1 |
| 17 | | 22.2 | 24.4 | 9.37E+01 | 2.86E+06 | — | 29.9 |
| 18 | | 22.1 | 23.9 | 9.33E+01 | 2.99E+06 | — | 29.7 |
| 19 | | 21.9 | 23.3 | 9.29E+01 | 3.08E+06 | — | 29.6 |
| 20 | | 21.0 | 22.8 | 9.26E+01 | 3.22E+06 | — | 29.4 |
| 21 | | 21.0 | 22.8 | 9.22E+01 | 3.36E+06 | — | 29.2 |
| 22 | | 21.3 | 22.8 | 9.19E+01 | 3.49E+06 | — | 29.1 |
| 23 | | 21.7 | 22.8 | 9.15E+01 | 3.63E+06 | — | 29.0 |
| 24 | | 22.8 | 23.9 | 9.11E+01 | 3.72E+06 | 1.55E+05 | 29.0 |
| 25 | | 24.2 | 27.2 | 8.87E+01 | 3.81E+06 | — | 29.0 |
| 26 | | 23.6 | 28.9 | 8.62E+01 | 3.95E+06 | — | 29.1 |
| 27 | | 23.6 | 30.0 | 8.37E+01 | 4.08E+06 | — | 29.1 |
| 28 | | 23.9 | 32.2 | 8.17E+01 | 4.22E+06 | — | 29.1 |
| 29 | | 23.7 | 32.8 | 8.15E+01 | 4.31E+06 | — | 29.1 |

## Table 9.2-25 UHS Basin Water Maximum Temperature (Case D1) (Continued)

| Time (hr) | Time (Days) | WBT (°C) | DBT (°C) | Heat Load (MW) | Water Mass Evap. After DBA (kg) | Daily Mass Evap. Rate After DBA (kg/hr) | Basin Temp (°C) |
|---|---|---|---|---|---|---|---|
| 30 | | 24.2 | 33.3 | 8.14E+01 | 4.45E+06 | — | 29.1 |
| 31 | | 23.7 | 33.9 | 8.12E+01 | 4.58E+06 | — | 29.1 |
| 32 | | 23.8 | 34.4 | 8.10E+01 | 4.72E+06 | — | 29.0 |
| 33 | | 23.7 | 33.9 | 8.08E+01 | 4.85E+06 | — | 29.0 |
| 34 | | 23.6 | 33.3 | 8.06E+01 | 4.99E+06 | — | 28.9 |
| 35 | | 23.4 | 31.7 | 8.04E+01 | 5.13E+06 | — | 28.9 |
| 36 | | 22.8 | 29.4 | 8.02E+01 | 5.26E+06 | — | 28.9 |
| 37 | | 23.3 | 27.8 | 8.00E+01 | 5.35E+06 | — | 28.8 |
| 38 | | 23.1 | 26.1 | 7.98E+01 | 5.49E+06 | — | 28.8 |
| 39 | | 22.9 | 25.6 | 7.97E+01 | 5.58E+06 | — | 28.8 |
| 40 | | 22.8 | 25.0 | 7.95E+01 | 5.72E+06 | — | 28.7 |
| 41 | | 22.6 | 24.4 | 7.93E+01 | 5.81E+06 | — | 28.7 |
| 42 | | 22.9 | 24.4 | 7.91E+01 | 5.90E+06 | — | 28.7 |
| 43 | | 23.5 | 25.0 | 7.89E+01 | 5.99E+06 | — | 28.7 |
| 44 | | 23.5 | 25.0 | 7.87E+01 | 6.08E+06 | — | 28.7 |
| 45 | | 22.9 | 24.4 | 7.85E+01 | 6.21E+06 | — | 28.7 |
| 46 | | 22.9 | 24.4 | 7.83E+01 | 6.30E+06 | — | 28.7 |
| 47 | | 22.9 | 24.4 | 7.82E+01 | 6.40E+06 | — | 28.7 |
| 48 | 2 | 23.5 | 25.0 | 7.80E+01 | 6.49E+06 | 1.15E+05 | 28.7 |
| 72 | 3 | 23.5 | 25.0 | 5.66E+01 | 8.35E+06 | 7.75E+04 | 30.5 |
| 96 | 4 | 22.2 | 23.3 | 5.45E+01 | 1.01E+07 | 7.37E+04 | 30.7 |
| 120 | 5 | 24.2 | 26.1 | 5.30E+01 | 1.18E+07 | 6.99E+04 | 31.1 |
| 144 | 6 | 23.3 | 24.4 | 5.23E+01 | 1.35E+07 | 6.99E+04 | 30.8 |
| 168 | 7 | 23.7 | 25.6 | 5.16E+01 | 1.51E+07 | 6.80E+04 | 30.7 |
| 192 | 8 | 23.8 | 26.1 | 5.09E+01 | 1.67E+07 | 6.80E+04 | 30.8 |
| 216 | 9 | 24.3 | 26.7 | 5.03E+01 | 1.84E+07 | 6.80E+04 | 30.8 |
| 240 | 10 | 24.0 | 25.6 | 4.95E+01 | 2.00E+07 | 6.61E+04 | 30.9 |
| 264 | 11 | 24.0 | 25.6 | 4.88E+01 | 2.16E+07 | 6.80E+04 | 30.8 |
| 288 | 12 | 23.7 | 25.6 | 4.82E+01 | 2.32E+07 | 6.58E+04 | 30.6 |
| 312 | 13 | 22.9 | 24.4 | 4.80E+01 | 2.47E+07 | 6.54E+04 | 30.8 |

## Table 9.2-25 UHS Basin Water Maximum Temperature (Case D1) (Continued)

| Time (hr) | Time (Days) | WBT (°C) | DBT (°C) | Heat Load (MW) | Water Mass Evap. After DBA (kg) | Daily Mass Evap. Rate After DBA (kg/hr) | Basin Temp (°C) |
|---|---|---|---|---|---|---|---|
| 336 | 14 | 23.7 | 25.6 | 4.78E+01 | 2.63E+07 | 6.65E+04 | 30.8 |
| 360 | 15 | 23.7 | 25.6 | 4.75E+01 | 2.79E+07 | 6.52E+04 | 30.7 |
| 384 | 16 | 24.2 | 26.1 | 4.73E+01 | 2.95E+07 | 6.58E+04 | 30.9 |
| 408 | 17 | 24.6 | 26.1 | 4.70E+01 | 3.10E+07 | 6.46E+04 | 30.9 |
| 432 | 18 | 24.7 | 26.7 | 4.68E+01 | 3.26E+07 | 6.50E+04 | 30.8 |
| 456 | 19 | 24.6 | 26.1 | 4.65E+01 | 3.41E+07 | 6.46E+04 | 30.9 |
| 480 | 20 | 24.7 | 26.7 | 4.63E+01 | 3.57E+07 | 6.48E+04 | 30.9 |
| 504 | 21 | 24.6 | 26.1 | 4.61E+01 | 3.72E+07 | 6.39E+04 | 31.0 |
| 528 | 22 | 24.7 | 26.7 | 4.59E+01 | 3.88E+07 | 6.35E+04 | 30.9 |
| 552 | 23 | 24.7 | 26.7 | 4.57E+01 | 4.03E+07 | 6.37E+04 | 30.9 |
| 576 | 24 | 24.6 | 26.1 | 4.56E+01 | 4.18E+07 | 6.35E+04 | 31.0 |
| 600 | 25 | 24.3 | 26.7 | 4.55E+01 | 4.34E+07 | 6.44E+04 | 30.8 |
| 624 | 26 | 24.3 | 26.7 | 4.53E+01 | 4.49E+07 | 6.37E+04 | 31.0 |
| 648 | 27 | 24.0 | 25.6 | 4.52E+01 | 4.64E+07 | 6.26E+04 | 30.8 |
| 672 | 28 | 22.6 | 24.4 | 4.51E+01 | 4.79E+07 | 6.48E+04 | 30.1 |
| 696 | 29 | 23.1 | 25.0 | 4.50E+01 | 4.96E+07 | 6.82E+04 | 30.1 |
| 720 | 30 | 23.8 | 26.1 | 4.48E+01 | 5.12E+07 | 6.77E+04 | 30.1 |

## Table 9.2-26 UHS Basin Water Maximum Temperature (Case D2)

| Time (hr) | Time (Days) | WBT (°C) | DBT (°C) | Heat Load (MW) | Mass Evap. After DBA (kg) | Daily Mass Evap. Rate After DBA (kg/hr) | Basin Temp (°C) |
|---|---|---|---|---|---|---|---|
| 0 | 0 | 24.6 | 26.1 | 4.60E+03 | 0.00E+00 | — | 32.2 |
| 1 | | 24.3 | 27.8 | 1.32E+02 | 2.27E+05 | 2.27E+05 | 32.3 |
| 2 | | 24.1 | 29.4 | 1.18E+02 | 4.08E+05 | — | 32.2 |
| 3 | | 23.9 | 31.1 | 1.12E+02 | 5.90E+05 | — | 32.0 |
| 4 | | 23.6 | 32.2 | 1.09E+02 | 7.71E+05 | — | 31.8 |
| 5 | | 24.1 | 32.8 | 1.06E+02 | 9.53E+05 | — | |
| 6 | | 23.7 | 35.0 | 1.04E+02 | 1.13E+06 | — | |
| 7 | | 23.1 | 33.9 | 1.03E+02 | 1.32E+06 | — | |
| 8 | | 23.7 | 32.8 | 1.01E+02 | 1.50E+06 | — | |
| 9 | | 24.2 | 33.3 | 1.00E+02 | 1.68E+06 | — | |
| 10 | | 23.9 | 32.2 | 9.87E+01 | 1.81E+06 | — | |
| 11 | | 24.1 | 31.7 | 9.74E+01 | 2.00E+06 | — | |
| 12 | | 23.4 | 29.4 | 9.67E+01 | 2.13E+06 | — | |
| 13 | | 23.3 | 27.8 | 9.61E+01 | 2.31E+06 | — | |
| 14 | | 22.9 | 26.7 | 9.55E+01 | 2.45E+06 | — | |
| 15 | | 22.4 | 25.0 | 9.48E+01 | 2.59E+06 | — | |
| 16 | | 22.4 | 25.0 | 9.42E+01 | 2.72E+06 | — | |
| 17 | | 22.2 | 24.4 | 9.37E+01 | 2.86E+06 | — | |
| 18 | | 22.1 | 23.9 | 9.33E+01 | 2.99E+06 | — | |
| 19 | | 21.9 | 23.3 | 9.29E+01 | 3.08E+06 | — | |
| 20 | | 21.0 | 22.8 | 9.26E+01 | 3.22E+06 | — | |
| 21 | | 21.0 | 22.8 | 9.22E+01 | 3.36E+06 | — | |
| 22 | | 21.3 | 22.8 | 9.19E+01 | 3.49E+06 | — | |
| 23 | | 21.7 | 22.8 | 9.15E+01 | 3.63E+06 | — | |
| 24 | 1 | 22.8 | 23.9 | 9.11E+01 | 3.72E+06 | 1.55E+05 | |
| 25 | | 24.2 | 27.2 | 8.87E+01 | 3.81E+06 | — | |
| 26 | | 23.9 | 28.9 | 8.62E+01 | 3.95E+06 | — | |
| 27 | | 23.6 | 30.0 | 8.37E+01 | 4.08E+06 | — | 29.1 |
| 28 | | 23.9 | 32.2 | 8.17E+01 | 4.22E+06 | — | 29.1 |
| 29 | | 23.7 | 32.8 | 8.15E+01 | 4.31E+06 | — | 29.1 |

## Table 9.2-26 UHS Basin Water Maximum Temperature (Case D2) (Continued)

| Time (hr) | Time (Days) | WBT (°C) | DBT (°C) | Heat Load (MW) | Mass Evap. After DBA (kg) | Daily Mass Evap. Rate After DBA (kg/hr) | Basin Temp (°C) |
|---|---|---|---|---|---|---|---|
| 30 | | 24.2 | 33.3 | 8.14E+01 | 4.45E+06 | — | 29.1 |
| 31 | | 23.7 | 33.9 | 8.12E+01 | 4.58E+06 | — | 29.1 |
| 32 | | 23.8 | 34.4 | 8.10E+01 | 4.72E+06 | — | 29.0 |
| 33 | | 23.7 | 33.9 | 8.08E+01 | 4.85E+06 | — | 29.0 |
| 34 | | 23.6 | 33.3 | 8.06E+01 | 4.99E+06 | — | 28.9 |
| 35 | | 23.4 | 31.7 | 8.04E+01 | 5.13E+06 | — | 28.9 |
| 36 | | 22.8 | 29.4 | 8.02E+01 | 5.26E+06 | — | 28.9 |
| 37 | | 23.3 | 27.8 | 8.00E+01 | 5.35E+06 | — | 28.8 |
| 38 | | 23.1 | 26.1 | 7.98E+01 | 5.49E+06 | — | 28.8 |
| 39 | | 22.9 | 25.6 | 7.97E+01 | 5.58E+06 | — | 28.8 |
| 40 | | 22.8 | 25.0 | 7.95E+01 | 5.72E+06 | — | 28.7 |
| 41 | | 22.6 | 24.4 | 7.93E+01 | 5.81E+06 | — | 28.7 |
| 42 | | 22.9 | 24.4 | 7.91E+01 | 5.90E+06 | — | 28.7 |
| 43 | | 23.5 | 25.0 | 7.89E+01 | 5.99E+06 | — | 28.7 |
| 44 | | 23.5 | 25.0 | 7.87E+01 | 6.08E+06 | — | 28.7 |
| 45 | | 22.9 | 24.4 | 7.85E+01 | 6.21E+06 | — | 28.7 |
| 46 | | 22.9 | 24.4 | 7.83E+01 | 6.30E+06 | — | 28.7 |
| 47 | | 22.9 | 24.4 | 7.82E+01 | 6.40E+06 | — | 28.7 |
| 48 | 2 | 23.5 | 25.0 | 7.80E+01 | 6.49E+06 | 1.15E+05 | 28.7 |
| 72 | 3 | 23.5 | 25.0 | 5.83E+01 | 8.57E+06 | 8.69E+04 | 28.9 |
| 96 | 4 | 22.2 | 23.3 | 5.63E+01 | 1.06E+07 | 8.32E+04 | 28.7 |
| 120 | 5 | 24.2 | 26.1 | 5.48E+01 | 1.24E+07 | 7.56E+04 | 29.1 |
| 144 | 6 | 23.3 | 24.4 | 5.40E+01 | 1.42E+07 | 7.75E+04 | 28.7 |
| 168 | 7 | 23.7 | 25.6 | 5.33E+01 | 1.61E+07 | 7.75E+04 | 29.0 |
| 192 | 8 | 23.8 | 26.1 | 5.27E+01 | 1.79E+07 | 7.56E+04 | 29.0 |
| 216 | 9 | 24.3 | 26.7 | 5.20E+01 | 1.97E+07 | 7.56E+04 | 29.2 |
| 240 | 10 | 24.0 | 25.6 | 5.13E+01 | 2.15E+07 | 7.56E+04 | 29.1 |
| 264 | 11 | 24.0 | 25.6 | 5.06E+01 | 2.33E+07 | 7.28E+04 | 28.9 |
| 288 | 12 | 23.7 | 25.6 | 5.00E+01 | 2.50E+07 | 7.30E+04 | 28.5 |
| 312 | 13 | 22.9 | 24.4 | 4.98E+01 | 2.68E+07 | 7.13E+04 | 28.8 |

**Table 9.2-26 UHS Basin Water Maximum Temperature (Case D2) (Continued)**

| Time (hr) | Time (Days) | WBT (°C) | DBT (°C) | Heat Load (MW) | Mass Evap. After DBA (kg) | Daily Mass Evap. Rate After DBA (kg/hr) | Basin Temp (°C) |
|---|---|---|---|---|---|---|---|
| 336 | 14 | 23.7 | 25.6 | 4.95E+01 | 2.85E+07 | 7.30E+04 | 28.7 |
| 360 | 15 | 23.7 | 25.6 | 4.93E+01 | 3.02E+07 | 7.03E+04 | 28.6 |
| 384 | 16 | 24.2 | 26.1 | 4.90E+01 | 3.19E+07 | 7.13E+04 | 29.1 |
| 408 | 17 | 24.6 | 26.1 | 4.88E+01 | 3.36E+07 | 7.11E+04 | 29.3 |
| 432 | 18 | 24.7 | 26.7 | 4.86E+01 | 3.53E+07 | 7.14E+04 | 29.3 |
| 456 | 19 | 24.6 | 26.1 | 4.83E+01 | 3.70E+07 | 7.14E+04 | 29.1 |
| 480 | 20 | 24.7 | 26.7 | 4.81E+01 | 3.87E+07 | 7.11E+04 | 29.2 |
| 504 | 21 | 24.6 | 26.1 | 4.79E+01 | 4.04E+07 | 7.07E+04 | 29.2 |
| 528 | 22 | 24.7 | 26.7 | 4.77E+01 | 4.21E+07 | 6.99E+04 | 29.3 |
| 552 | 23 | 24.7 | 26.7 | 4.75E+01 | 4.38E+07 | 7.03E+04 | 29.3 |
| 576 | 24 | 24.6 | 26.1 | 4.74E+01 | 4.55E+07 | 7.01E+04 | 29.3 |
| 600 | 25 | 24.3 | 26.7 | 4.72E+01 | 4.72E+07 | 7.07E+04 | 28.8 |
| 624 | 26 | 24.3 | 26.7 | 4.71E+01 | 4.89E+07 | 7.03E+04 | 29.1 |
| 648 | 27 | 24.0 | 25.6 | 4.70E+01 | 5.05E+07 | 6.84E+04 | 28.7 |
| 672 | 28 | 22.6 | 24.4 | 4.69E+01 | 5.22E+07 | 6.96E+04 | 27.7 |
| 696 | 29 | 23.1 | 25.0 | 4.67E+01 | 5.39E+07 | 7.03E+04 | 27.7 |
| 720 | 30 | 23.8 | 26.1 | 4.66E+01 | 5.56E+07 | 7.01E+04 | 28.6 |

The following figures are either modified or are new, and are located in Chapter 21:

- Figure 9.2-1 Reactor Building Cooling Water System P&ID (Sheet 1-9)
- Figure 9.2-2 HVAC Normal Cooling Water System P&ID
- Figure 9.2-4 Makeup Water (Condensate) System P&ID
- Figure 9.2-5 Makeup Water System (Purified) P&ID (Sheet 1-3)
- Figure 9.2-7 Reactor Service Water System P&ID (Sheets 1-3)
- Figure 9.2-9 Potable Water System P&ID (Sheet 2 of 2)

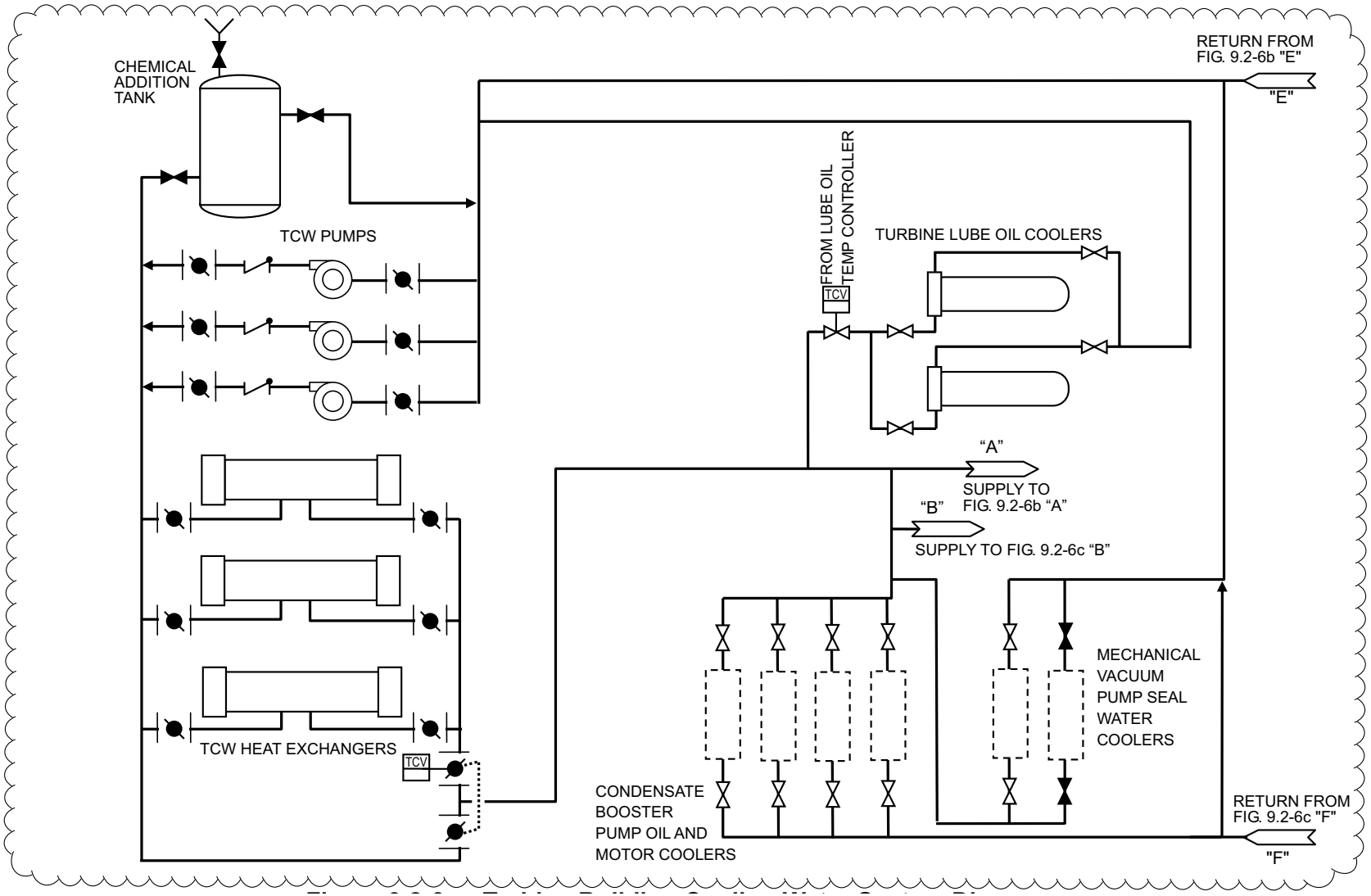


**Figure 9.2-6a Turbine Building Cooling Water System Diagram**

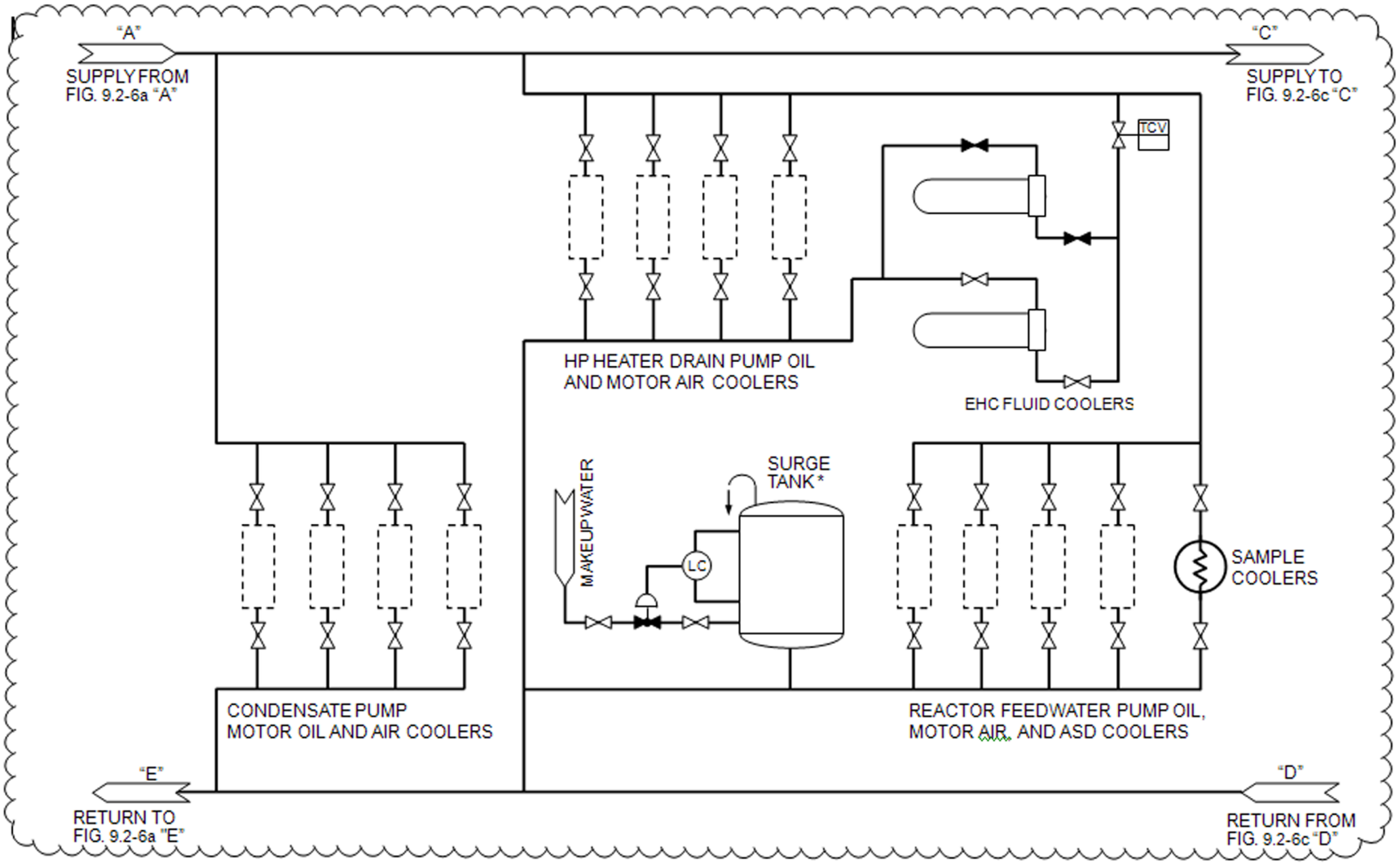


**Figure 9.2-6b Turbine Building Cooling Water System Diagram**

*The surge tank is shared with the HNCW system.

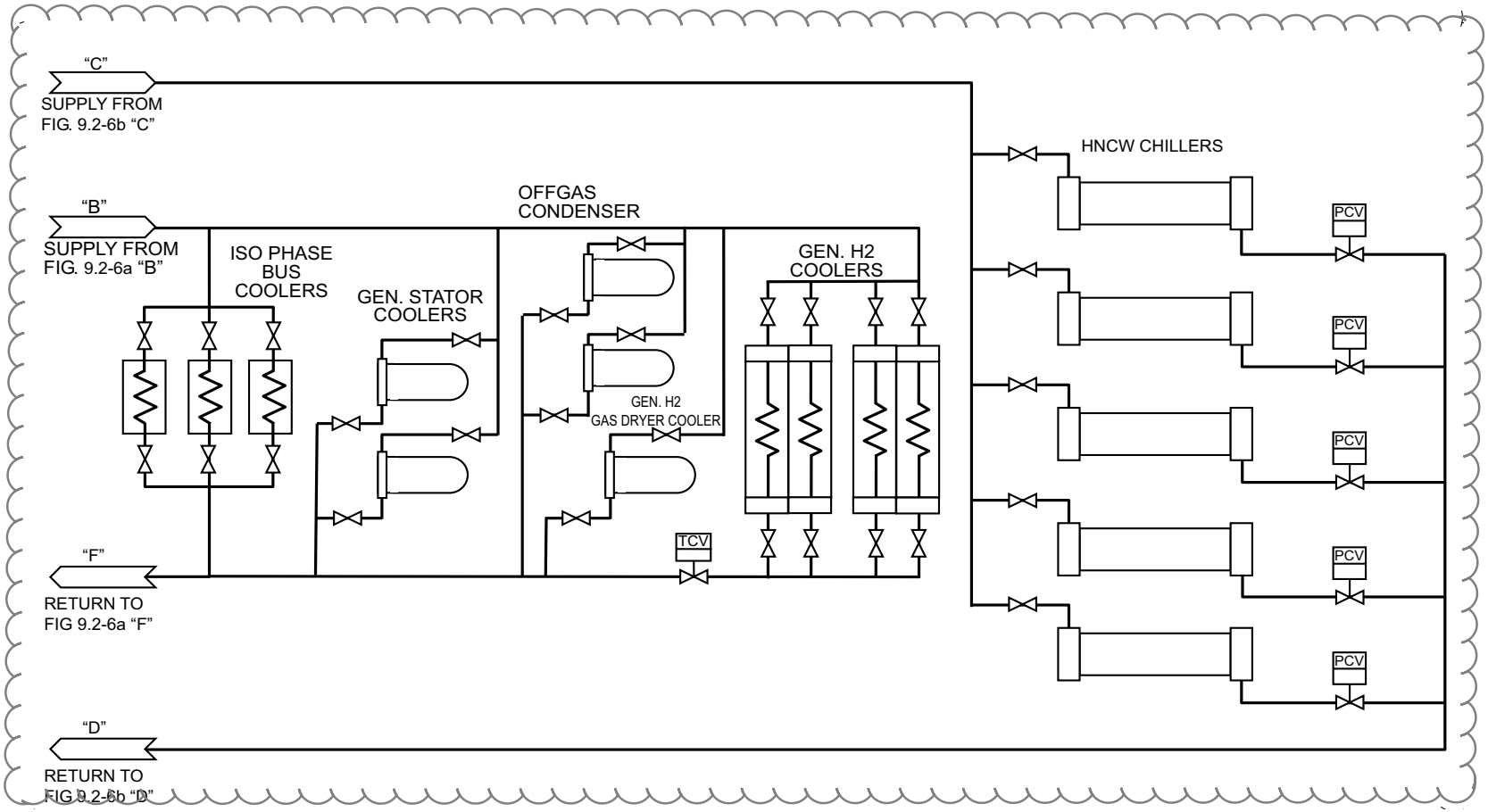


**Figure 9.2-6c Turbine Building Cooling Water System Diagram**

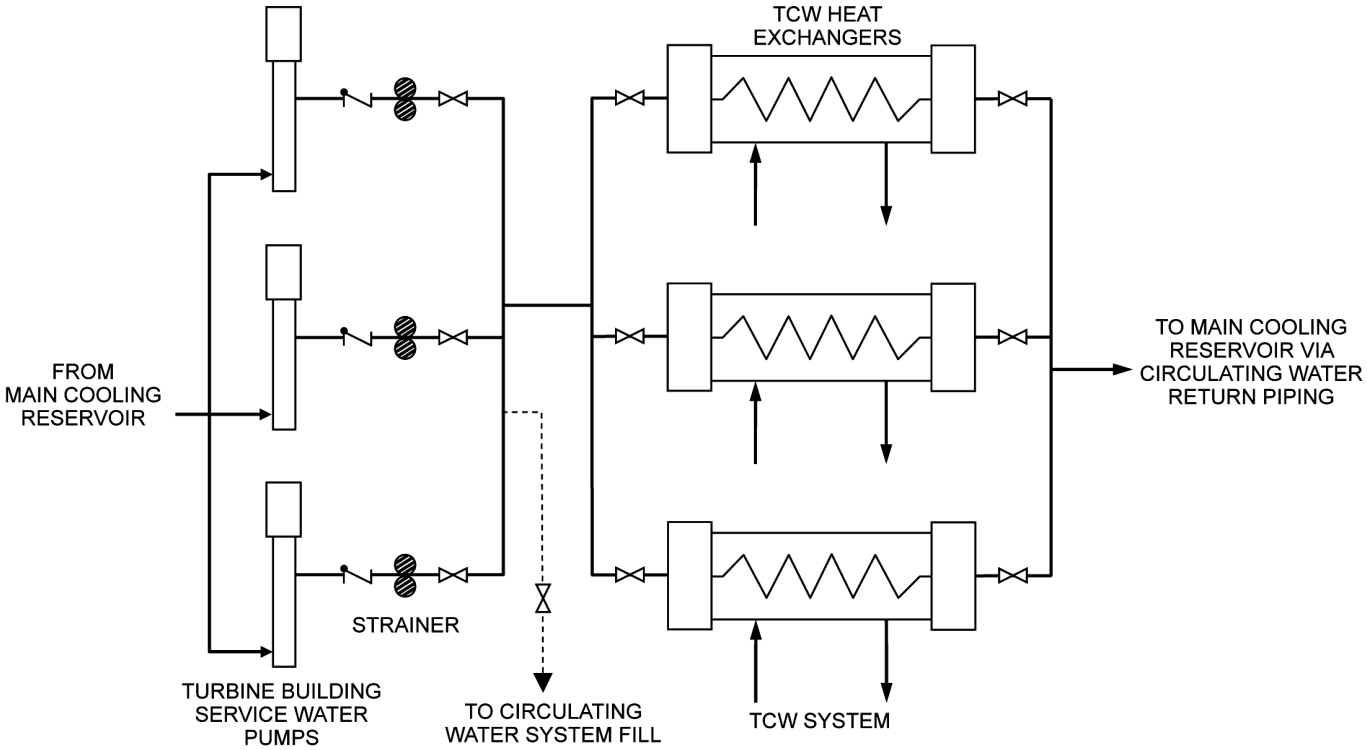


**Figure 9.2-8 Turbine Building Service Water System**

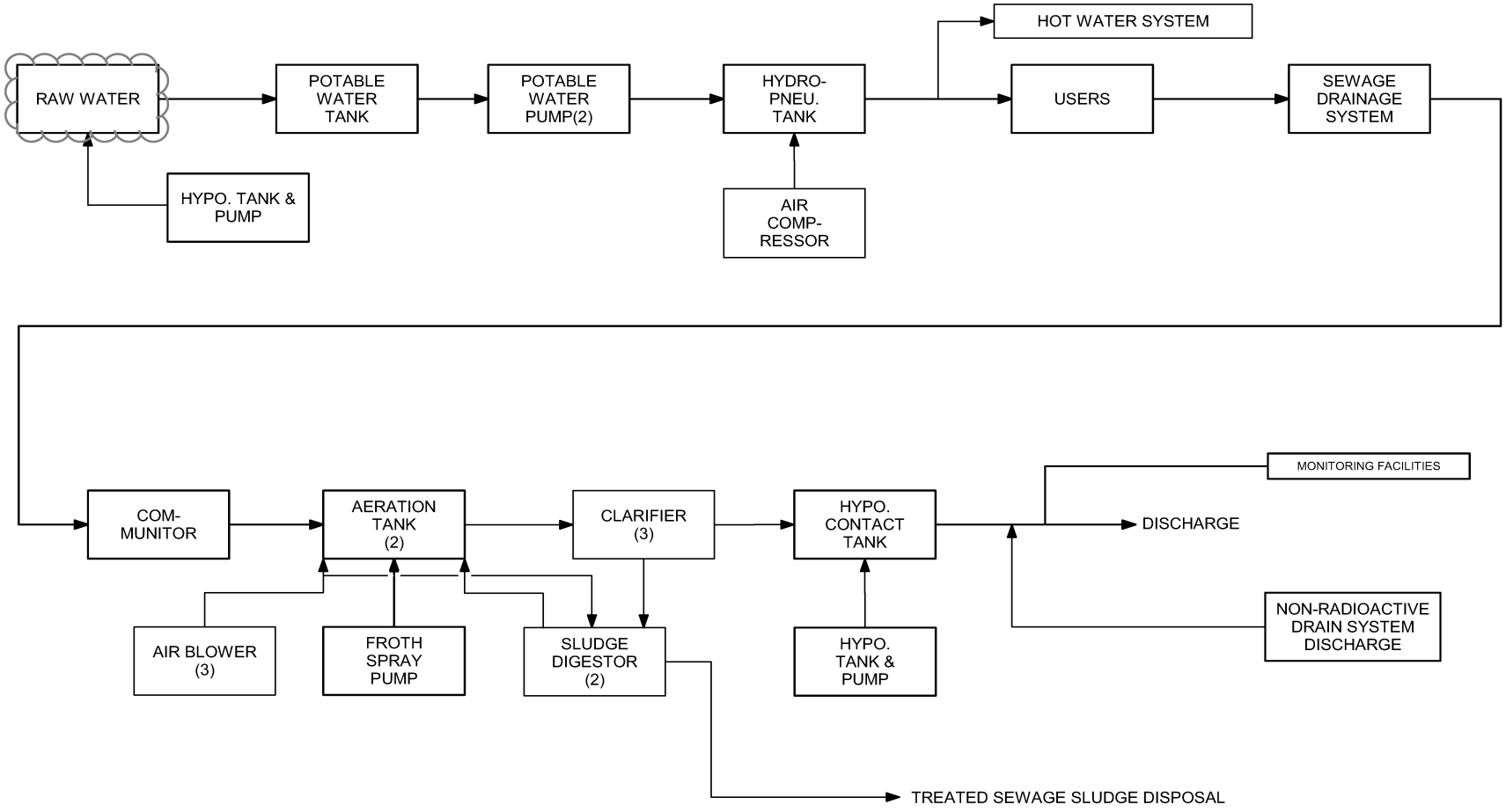


**Figure 9.2-9 Potable and Sanitary Water System (Sheet 1 of 2)**

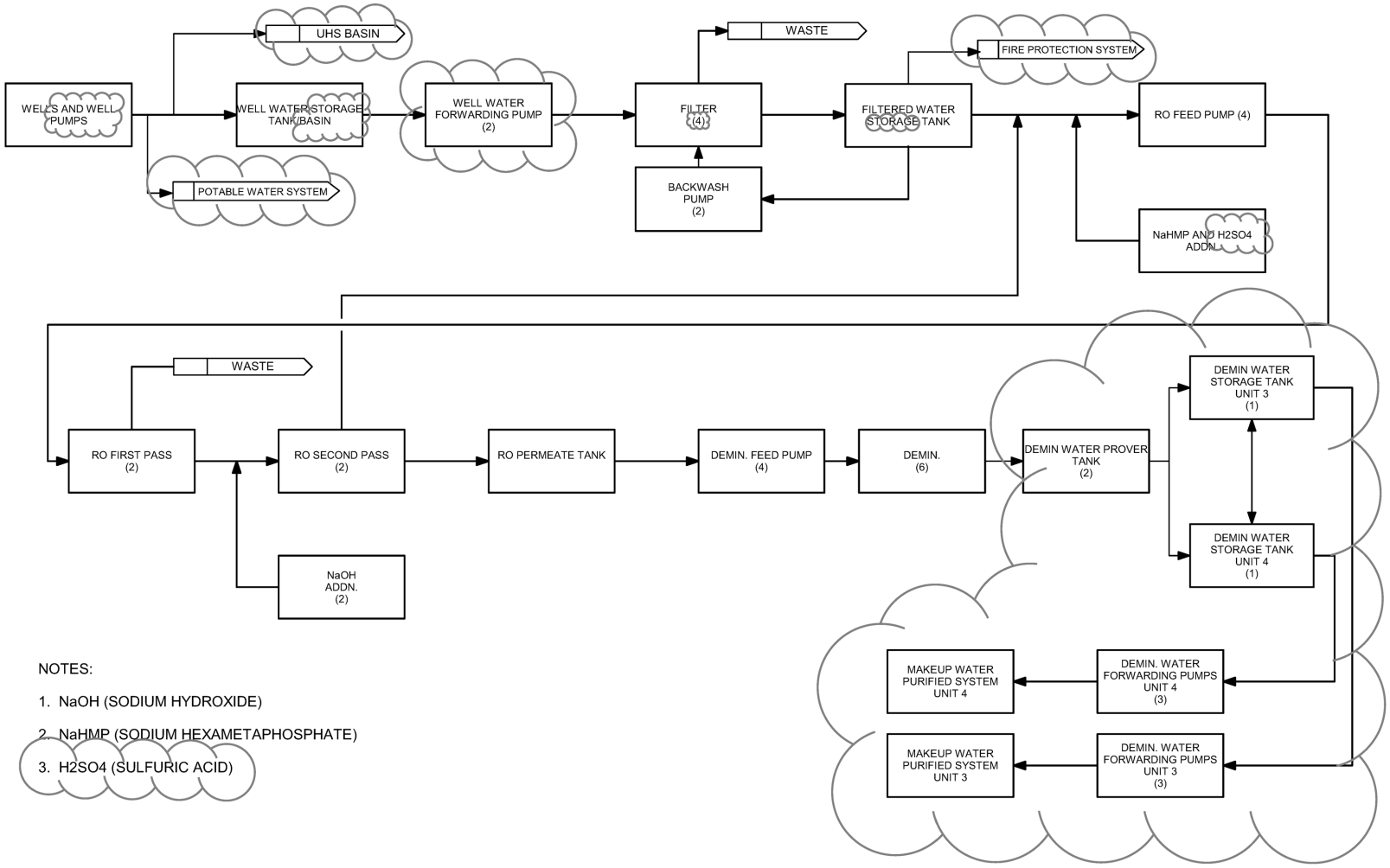


NOTES:

1. NaOH (SODIUM HYDROXIDE)
2. NaHMP (SODIUM HEXAMETAPHOSPHATE)
3. H2SO4 (SULFURIC ACID)

**Figure 9.2-10 Makeup Water Preparation System (Interface Requirements)**

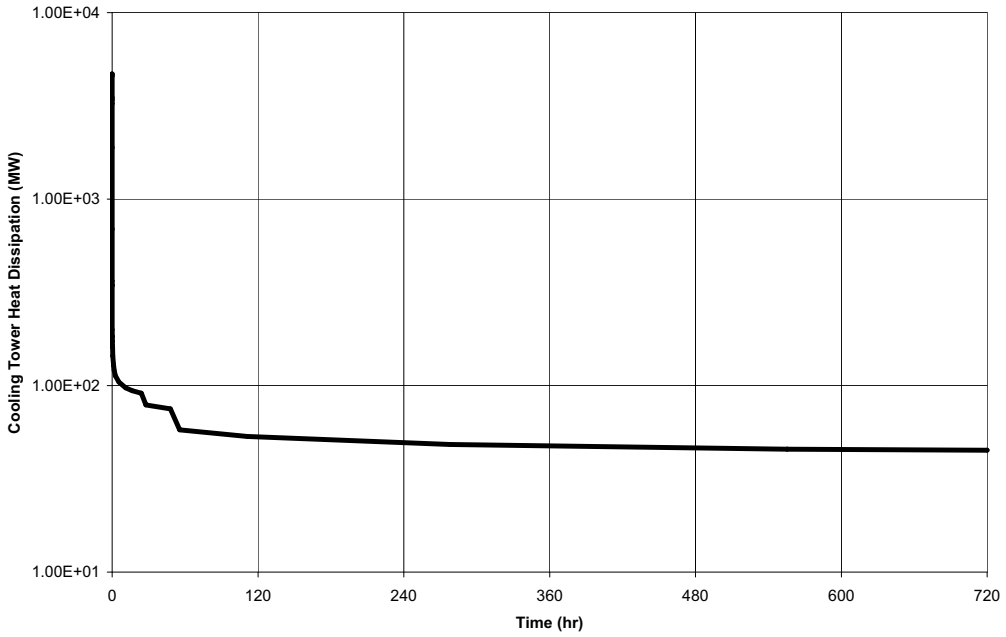


**Figure 9.2-11 Cooling Tower Heat Dissipation (Case D1)**

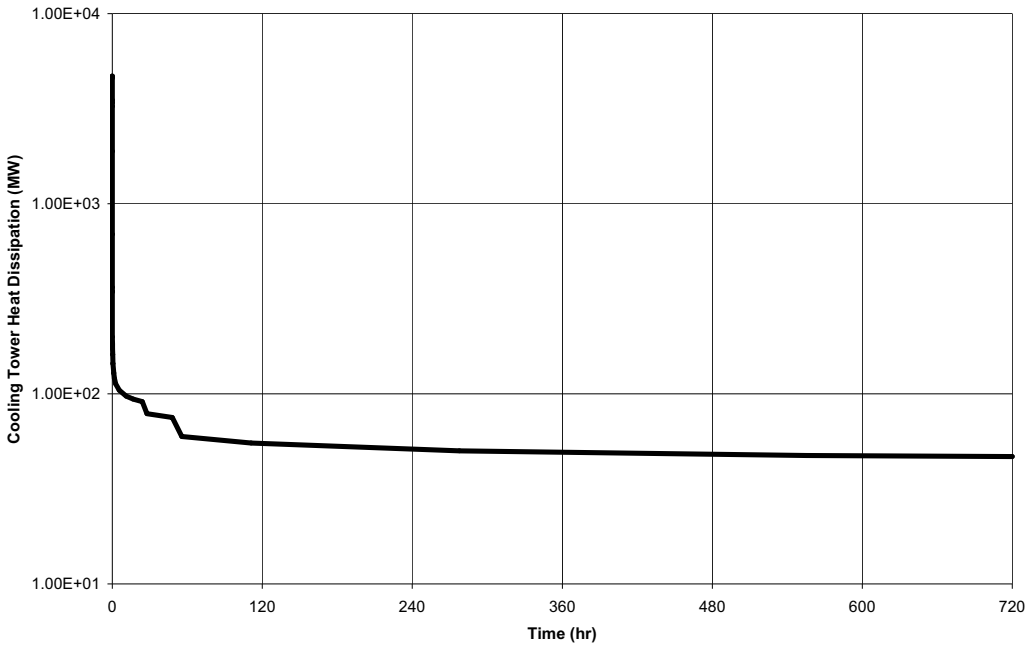


**Figure 9.2-12 Cooling Tower Heat Dissipation (Case D2)**

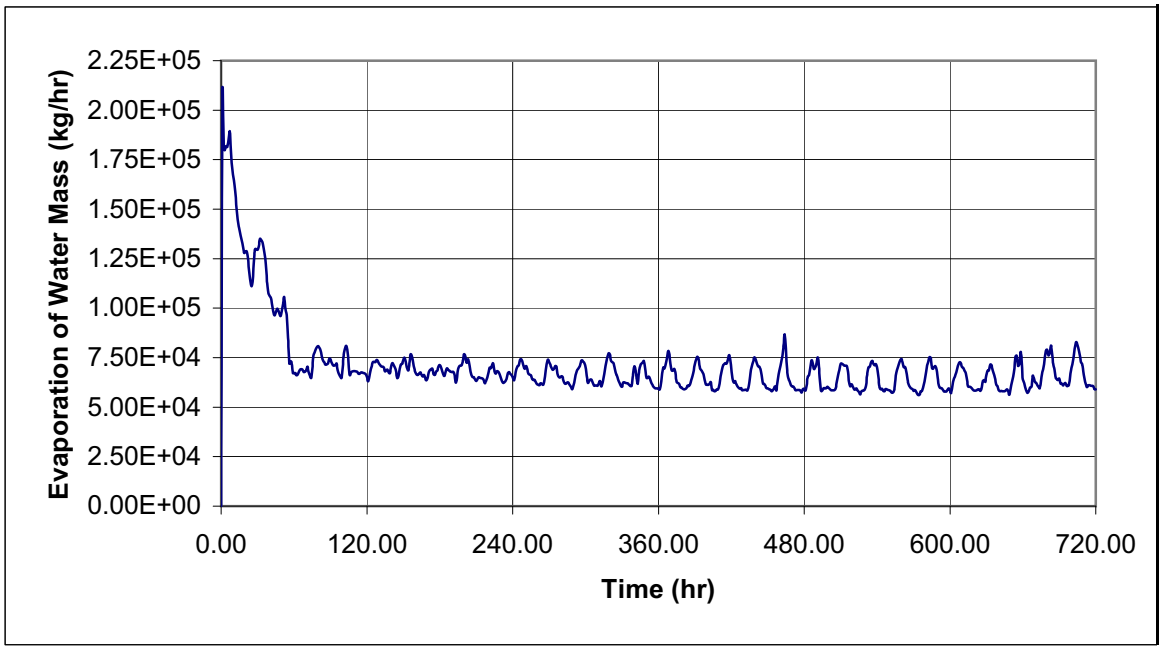


**Figure 9.2-13 Thirty-Day Water Evaporation for Case D1**

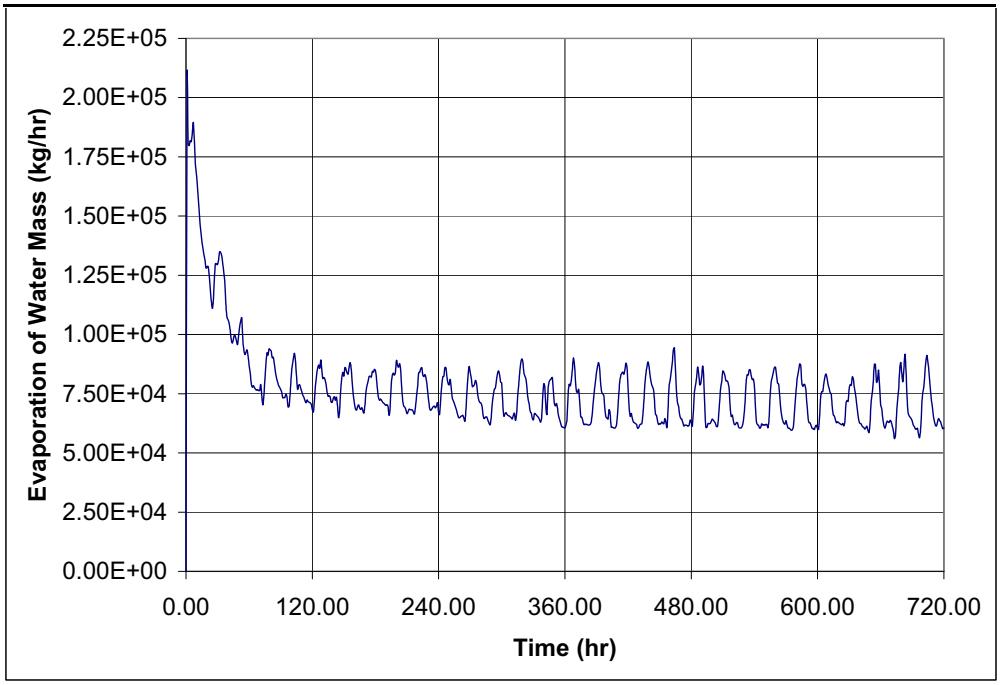


**Figure 9.2-14 Thirty-Day Water Evaporation for Case D2**

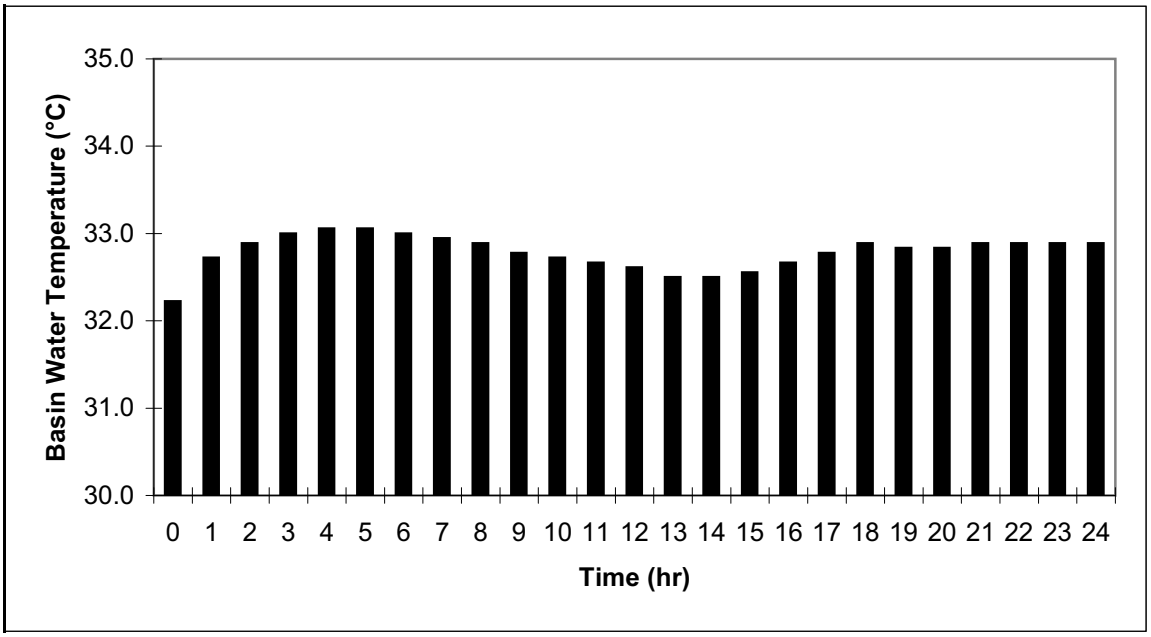


**Figure 9.2-15 UHS Basin Water Maximum Temperature (Worst 1-Day)**

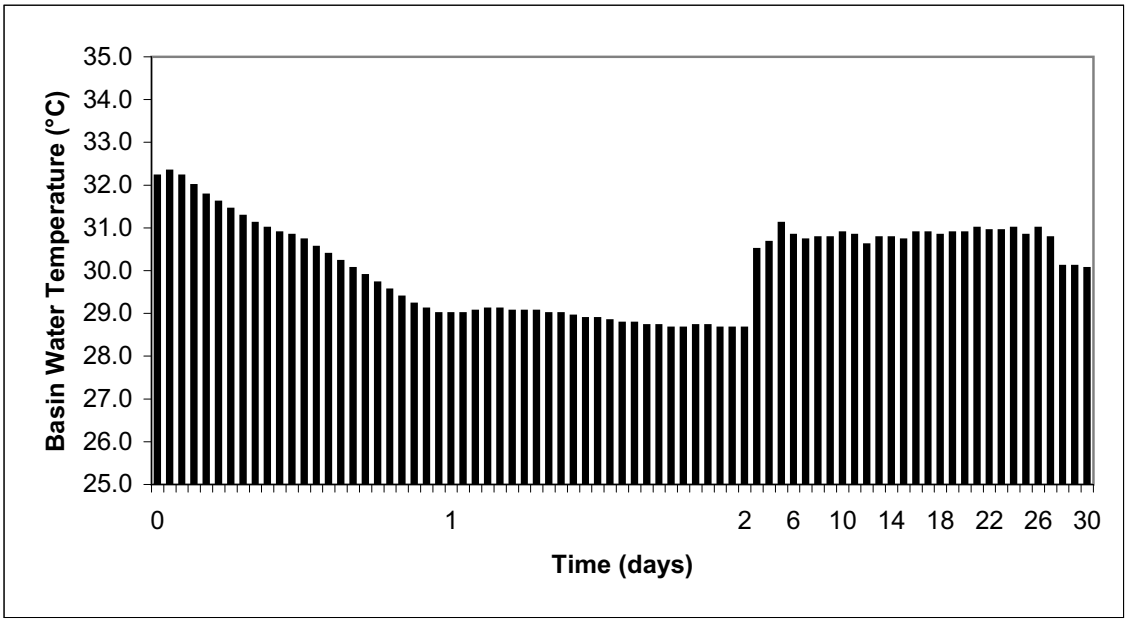


**Figure 9.2-16 UHS Basin Water Maximum Temperature (Case D1)**

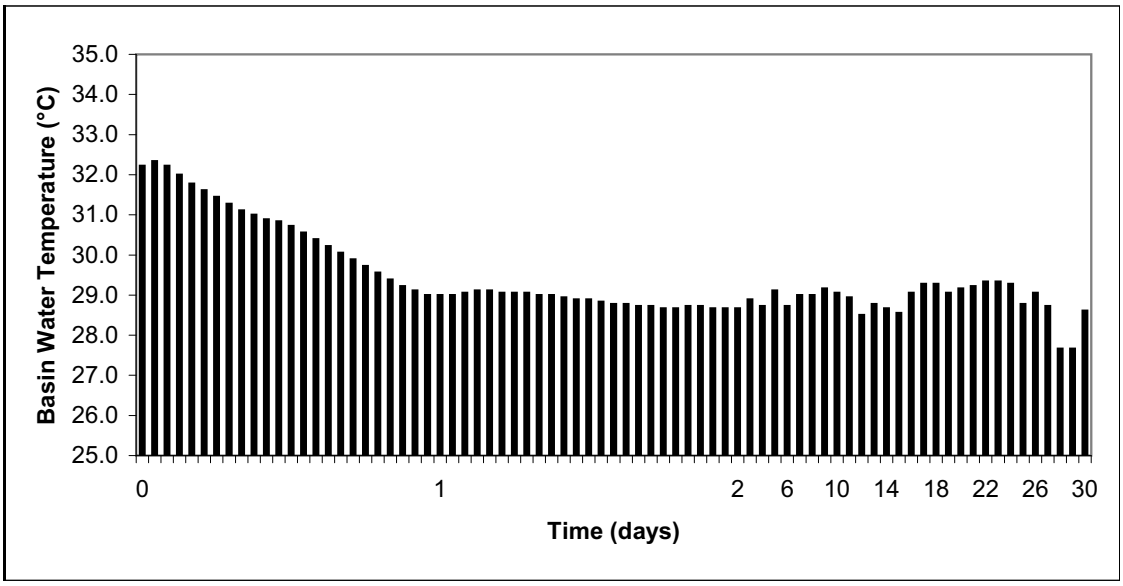


**Figure 9.2-17 UHS Basin Water Maximum Temperature (Case D2)**