9.0 Auxiliary Systems

9.1 Fuel Storage and Handling

The information in this section of the reference ABWR DCD is subject to numerous design revisions. Consequently, for clarity it is presented in its entirety with the following standard departures incorporated.

STD DEP 9.1-1, Update of Fuel Storage and Handling Equipment (Tables 9.1-3, 9.1-4, 9.1-5, 9.1-6, 9.1-7, 9.1-8, 9.1-11, Figures 9.1-4, 9.1-5, 9.1-7, 9.1-8, 9.1-10, 9.1-11, 9.1-12, and 9.1-14)

STD DEP T1 2.4-1, Connection of RHR Loop A to Fuel Pool Cooling. (Figure 9.1-1 Sheet 2 and Figure 9.1-2 Sheet 1 and 2)

STD DEP T1 2.4-1 is incorporated in Section 9.1.3. In addition, standard supplemental information is included in Subsection 9.1.6 to address COL license information items. The original DCD text is presented in *italics,* deletions are shown as ~~*strike throughs*~~, and new text in underlined regular font. Table additions and deletions for departures have been incorporated using regular font for clarity. Tables 9.1-9, 9.1-10 and 9.1-12 have no changes from ABWR DCD. Figure changes are identified as deleted or modified content is captured in a cloud.

The new-fuel storage vault stores a 40% core load of new fuel assemblies. The fuel is stored in the new-fuel storage racks in the vault, which is located as close as practicable to the spent-fuel storage pool work area to facilitate handling during fuel preparation. The new-fuel inspection stand is close to the new-fuel storage vault to minimize fuel transport distance.

Spent fuel removed from the reactor vessel must be stored underwater while awaiting disposition. Spent-fuel storage racks, which are used for this purpose, are located at the bottom of the fuel storage pool under sufficient water to provide radiological shielding. This pool water is processed through the Fuel Pool Cooling and Cleanup System (FPC) to provide cooling to the spent fuel in storage and for maintenance of fuel pool water quality. The spent-fuel pool storage capacity is a minimum of *270% of the reactor core.*

~~*The new-fuel and spent-fuel storage racks are the same high density design. The new-fuel racks can be used for either dry or submerged storage of fuel. The design of the new-fuel racks will be described. Information on the spent-fuel racks will only be presented when the design is different.*~~

9.1.1 New-Fuel Storage

9.1.1.1 Design Bases

9.1.1.1.1 Nuclear Design

A full array of loaded new-fuel racks is designed to be subcritical, by at least 5% Δk.

(1) Monte Carlo techniques are employed in the calculations performed to assure that k_{eff} does not exceed 0.95 under all normal and abnormal conditions.

(2) The assumption is made that the storage array is infinite in all directions. Since no credit is taken for neutron leakage, the values reported as effective neutron multiplication factors are, in reality, infinite neutron multiplication factors.

(3) The biases between the calculated results and experimental results, as well as the uncertainty involved in the calculations, are taken into account as part of the calculational procedure to assure that the specific k_{eff} limit is met.

The new-fuel storage racks are purchased equipment. The purchase specification for these racks will *require the vendor to provide the information requested in Question 430.180 on criticality analysis for the inadvertent placement of a fuel assembly in other than prescribed locations. See Subsection ~~9.1.6~~* 9.1.6.1 *for COL license information requirements.*

9.1.1.1.2 Storage Design

The new-fuel storage racks provided in the new-fuel storage vault provide storage for 40% of one full core fuel load.

9.1.1.1.3 Mechanical and Structural Design

~~*See Subsection 9.1.2.1.3.*~~ The new-fuel storage racks in the Reactor Building contain storage space for fuel assemblies (with channels) or bundles (without channels). They are designed to withstand all credible static and seismic loadings. The racks are designed to protect the fuel assemblies and bundles from excessive physical damage that may cause the release of radioactive materials in excess of 10 CFR 20 and 10 CFR 100 requirements, under normal and abnormal conditions caused by impacting from the fuel assemblies, bundles, or other equipment.

The new-fuel storage vault is an un-lined reinforced concrete structure. The new fuel is stored dry. The fuel storage vault contains a drain line to prevent accumulation of water in the vault. The new fuel storage vault is surrounded by a raised curb to prevent any inadvertent water on the refueling floor from entering the vault.

The racks are constructed in accordance with a quality assurance program that ensures that the design, construction, and testing requirements are met.

In accordance with Regulatory Guide 1.29, the fuel storage racks are Seismic Category I. The structural integrity of the rack will be demonstrated for the load combinations described in SRP 3.8.4, Appendix D.

Thermal loads are not included in the above combinations because they are negligible due to the design of the rack (i.e., the rack is free to expand/contract under nominal refueling floor temperature changes).

The new fuel storage racks completely fill the storage space and are not subject to overturn from horizontal loads. The analysis of the rack assumes an adequate supporting structure, and loads were generated accordingly.

Stress analyses are performed using classical methods based upon shears and moments developed by the dynamic method. Using the given loads, load conditions and analytical methods, stresses are calculated at critical sections of the rack and compared to acceptance criteria referenced in ASME Section III, Subsection NF.

The loads in the three orthogonal directions are considered to be acting simultaneously and are combined using the square root of the sum of the squares (SRSS) method suggested in Regulatory Guide 1.92.

Under fuel drop loading conditions, the acceptance criterion is that, although deformation may occur, k_{eff} must remain $\leq$0.95. The rack is designed such that, should the drop of a fuel assembly damage the rack, the k_{eff} would still be $\leq$0.95, as required.

The effect of the gap between the fuel and the storage rack is taken into account on a local effect basis. Dynamic response analysis has shown that the fuel contacts the rack over a large portion of its length, thus preventing an overloaded condition of both fuel and rack.

9.1.1.1.4 Thermal-Hydraulic Design

~~*See Subsection 9.1.2.1.4.*~~ Thermal-hydraulic analysis is not applicable since the new fuel storage vault is dry storage.

9.1.1.1.5 Material Considerations

~~*See Subsection 9.1.2.1.5.*~~ All structural material used in the fabrication of the fuel storage racks is in accordance with the latest issue of the applicable ASTM specification at the time of equipment order. This material is chosen due to its corrosion resistance and its ability to be formed and welded with consistent quality.

The new fuel storage rack is compatible with the environment and provides a design life of 60 years.

9.1.1.1.6 Dynamic and Impact Analysis

The new-fuel storage racks are purchased equipment. The purchase specification for the new-fuel storage racks will require *the vendor to perform confirmatory dynamic analyses. The SSE input excitation for these analyses will utilize the horizontal and vertical response spectra provided in Subsection 3A.10.2.*

Vertical impact analysis is required because the fuel assembly is held in the storage rack by its own weight without any mechanical holddown devices. Therefore, when the downward acceleration of the storage rack exceeds 1g, contact between the fuel assembly and the storage rack is lost. Horizontal impact analysis is required because a clearance exists between the fuel assembly and the storage rack walls.

See Subsection 9.1.6.2 for COL license information requirements.

9.1.1.1.7 Not Used

9.1.1.2 Facilities Description (New-Fuel Storage)

(1) The new-fuel storage vault is located on the refueling floor of the Reactor Building (R/B) (see Figure 1.2-12).

(2) The R/B, a Seismic Category I building, protects the new fuel from seismic events and externally generated missiles. There are no non-seismic systems, high or moderate energy pipes, or rotating machinery located in the vicinity of the new-fuel storage vault.

(3) The R/B HVAC system monitors the building exhausts for radioactivity. If radioactivity is encountered, the system is isolated and the SGTS starts operation. This prevents the possible release of radioactivity from any fuel handling accident.

(4) The new-fuel storage racks are top-entry racks designed to preclude the possibility of criticality under normal and abnormal conditions. The upper tieplate of the fuel element rests against the module to provide lateral support. The lower tieplate sits in the bottom of the rack, which supports the weight of the fuel.

(5) The rack arrangement is designed to prevent accidental insertion of fuel assemblies or bundles between adjacent racks. The storage rack is designed to provide accessibility to the fuel bail for grappling purposes.

(6) The floor of the new-fuel storage vault is sloped to a drain located at the low point. This drain removes any water that may be accidentally and unknowingly introduced into the vault. The drain is part of the floor drain subsystem of the Liquid Radwaste System.

(7) The radiation monitoring equipment for the new-fuel storage areas is described in Subsection 12.3.4.

9.1.1.3 Safety Evaluation

9.1.1.3.1 Criticality Control

The design of the new-fuel storage racks provides for an effective multiplication factor (k_{eff}) for both normal and abnormal storage conditions equal to or less than 0.95 in the new-fuel storage racks. To ensure that design criteria are met, the following normal and abnormal new-fuel storage conditions were analyzed:

(1) Normal positioning in the new fuel array

(2) Eccentric positioning in the new fuel array

The new-fuel storage area will accommodate fuel (k_{inf} < 1.35 at 20°C in standard core geometry) with no safety implications.

9.1.1.3.2 Structural Design

(1) The new-fuel vault contains one or more fuel storage racks which provides storage for fuel a maximum of 40% of one full core fuel load.

(2) The new-fuel storage racks are ~~designed to be freestanding (i.e., no supports above the base). This means that the support structure also provides the required dynamic stability.~~ supported vertically from a base that is not anchored to the bottom of the fuel vault. A small clearance exists around the fuel rack base to a mechanical stop that limits horizontal movement. The top of the fuel rack assemblies are anchored to the fuel vault wall from multiple locations. These supports provide the dynamic stability of the new fuel racks.

(3) The racks include individual solid tube storage compartments which provide lateral restraints over the entire length of the fuel assembly.

(4) The weight of the fuel assembly or bundle is supported axially by the rack lower support.

(5) The racks are fabricated from materials used for construction, in accordance with the latest applicable ASTM specifications.

(6) Lead-in guides at the top of the storage spaces provide guidance of the fuel during insertion.

(7) The racks are designed to withstand, while maintaining the nuclear safety design basis, the impact force generated by the vertical free-fall drop of a fuel assembly from a height of 1.8 meters.

(8) The rack is designed to withstand a pullup force of 17.79 kN and a horizontal force of 4.45 kN.

(9) The new-fuel storage racks require no periodic special testing or inspection for nuclear safety purposes.

9.1.1.3.3 Protection Features of the New-Fuel Storage Facilities

The new-fuel storage vault is housed in the Reactor Building. The vault and Reactor Buildings are Seismic Category I, and are designed to withstand natural phenomena such as tornadoes, tornado missiles, floods and high winds. Fire protection features are described in Subsection 9.5.1 and Appendix 9A.

Procedural fuel-handling requirements and equipment design dictate that no more than one bundle at a time can be handled over the storage racks and at a maximum height of 1.8m above the upper rack. Therefore, the racks cannot be displaced in a manner causing critical spacing as a result of impact from a falling object.

The auxiliary hoist on the Reactor Building crane can traverse the full length of the refueling floor. This hoist ~~is~~ can be used to move new fuel from the entry point into the Reactor Building, up the main equipment hatch to the refueling floor and from there to the new-fuel storage vault. This hoist can move fuel to the new-fuel inspection stand and ~~rechanneling area~~ to the fuel preparation machine at the end of the spent-fuel storage pool.

Should it become necessary to move major loads along or over the pools, administrative controls require that the load be moved over the empty portion of the spent-fuel pool and avoid the area of the new-fuel storage vault. The shipping cask cannot be lifted or moved above the new-fuel vault because of their relative locations on the refueling floor.

9.1.2 Spent-Fuel Storage

9.1.2.1 Design Bases

9.1.2.1.1 Nuclear Design

A full array in the loaded spent-fuel rack is designed to be subcritical, by at least 5% Δk. Neutron-absorbing material, as an integral part of the design, is employed to assure that the calculated k_{eff}, including biases and uncertainties, will not exceed 0.95 under all normal and abnormal conditions.

9.1.2.1.2 Storage Design

The fuel storage racks provided in the spent-fuel storage pool provide storage for a minimum of 270% of one full core fuel load.

9.1.2.1.3 Mechanical and Structural Design

The spent-fuel storage racks in the Reactor Building contain storage space for fuel assemblies (with channels) or bundles (without channels). They are designed to withstand all credible static and seismic loadings. The racks are designed to protect the fuel assemblies and bundles from excessive physical damage which may cause the release of radioactive materials in excess of 10 CFR 20 and 10 CFR 100 requirements, under normal and abnormal conditions caused by impacting from either fuel assemblies, bundles or other equipment.

The spent-fuel pool is a reinforced concrete structure with a stainless steel liner. The fuel storage pool liner seismic classification is provided in Table 3.2-1. The bottom of all pool gates are sufficiently high to maintain the water level over the spent-fuel storage racks to provide adequate shielding and cooling. All pool fill and ~~drain~~ discharge lines enter the pool above the safe shielding water level. Redundant anti-siphon ~~vacuum breakers are located at the high point of the pool circulation lines~~ protection is provided to preclude a pipe break from siphoning the water from the pool and jeopardizing the safe water level by locating two holes in each pool recirculation line at 10 mm and 510 mm below the lowest normal water level.

The racks are constructed in accordance with a quality assurance program that ensures that the design, construction and testing requirements are met.

The fuel storage racks are designed to handle irradiated fuel assemblies. The expected radiation levels are well below the design levels.

In accordance with Regulatory Guide 1.29, the fuel storage racks are Seismic Category I. The structural integrity of the rack will be demonstrated for the load combinations described in SRP 3.8.4, Appendix D. ~~*The structural integrity of the rack will be demonstrated for the load combinations described below using linear elastic design methods.*~~

~~*The applied loads to the rack are:*~~

~~*(1) Dead loads, which are weight of rack and fuel assemblies, and hydrostatic loads*~~

~~*(2) Live loads – effect of lifting an empty rack during installation*~~

~~*(3) Thermal loads – the uniform thermal expansion due to pool temperature changes*~~

~~*(4) Seismic forces of the SSE*~~

~~*(5) Accidental drop of fuel assembly from maximum possible height 1.8m above rack*~~

~~*(6) Postulated stuck fuel assembly causing an upward force of 13.35 kN*~~

~~*The load combinations considered in the rack design are:*~~

~~*(7) Live loads*~~

~~*(8) Dead loads plus SSE*~~

~~*(9) Dead loads plus fuel drop*~~

Thermal loads are not included in the above combinations because they are negligible due to the design of the rack (i.e., the rack is free to expand/contract under pool temperature changes).

The loads experienced under a stuck fuel assembly condition are typically less than those calculated for the seismic conditions and, therefore, need not be included as a load combination.

The storage racks are designed to counteract the tendency to overturn from horizontal loads and to lift from vertical loads. The analysis of the rack assumes an adequate supporting structure, and loads were generated accordingly.

Stress analyses will be performed by the vendor using classical methods based upon shears and moments developed by ~~the~~ an acceptable dynamic analysis method. Using the given loads, load conditions and analytical methods, stresses will be calculated at critical sections of the rack and compared to acceptance criteria referenced in ASME Section III, Subsection NF. ~~Compressive stability will be calculated according to the AISI code for light gauge structures.~~

The loads in the three orthogonal directions are considered to be acting simultaneously and are combined using the SRSS method suggested in Regulatory Guide 1.92.

Under fuel drop loading conditions, the acceptance criterion is that, although deformation may occur, k_{eff} must remain ≤0.95. The rack is designed such that, should the drop of a fuel assembly damage the tubes and dislodge a plate of poison material, the k_{eff} would still be ≤0.95 as required.

The effect of the gap between the fuel and the storage tube is taken into account on a local effect basis. Dynamic response analysis has shown that the fuel contacts the tube over a large portion of its length, thus preventing an overloaded condition of both fuel and tube.

The vertical impact load of the fuel onto its seat is considered conservatively as being slowly applied without any benefit for strain rate effects. See Subsection 9.1.6.7 for COL license information requirements.

9.1.2.1.4 Thermal-Hydraulic Design

The fuel storage racks are designed to provide sufficient natural convection coolant flow to remove decay heat without reaching excessive water temperatures (100°C).

In the spent-fuel storage pool, the bundle decay heat is removed by recirculation flow to the fuel pool cooling heat exchanger to maintain the pool temperature. Although the design pool exit temperature to the fuel pool cooling heat exchanger is far below boiling, the coolant temperature within the rack is higher, depending on the naturally induced bundle flow which carries away the decay heat generated by the spent fuel. The purchase specification for the fuel storage racks requires the vendor to perform the thermal-hydraulic analyses to evaluate the rate of naturally circulated flow and the maximum rack water exit temperature. See Subsection 9.1.6.8 for COL license information requirements.

9.1.2.1.5 Material Considerations

All structural material used in the fabrication of the fuel storage racks is in accordance with the latest issue of the applicable ASTM specification at the time of equipment order. This material is chosen due to its corrosion resistance and its ability to be formed and welded with consistent quality. The normal pool water operating temperatures are 16°C to 66°C.

The storage tube material is permanently marked with identification traceable to the material certifications. The fuel storage tube assembly is compatible with the environment of treated water and provides a design life of 60 years.

9.1.2.2 Facilities Description (Spent-Fuel Storage)

(1) The spent-fuel storage pool is located in the R/B (Figure 1.2-12).

(2) The R/B is a Seismic Category I building protecting the spent fuel from seismic events and externally generated missiles. There are no non-seismic systems, high or moderate energy pipes, or rotating machinery located in the vicinity of the spent-fuel pool or cask loading area on the refueling floor.

(3) The spent-fuel storage and adjacent cask loading area are separated by Seismic Category I gates. These gates isolate the cask loading area from the spent-fuel pool. The gates between the spent-fuel pool and other pools are all Seismic Category I.

(4) The shipping cask is placed in a walled off and drained portion of the spent-fuel pool. The drained volume is flooded, and the Seismic Category I gates removed. The spent fuel is then transferred. This process is reversed to remove the cask. The ratio of the two volumes is such that failure of the gates will not lower water level enough to be unacceptable. Interlocks on the main crane prevent the shipping cask from being carried over any other portion of the spent-fuel storage pool.

(5) The spent fuel storage racks provide storage in the R/B spent-fuel pool for spent fuel received from the reactor vessel during the refueling operation. The spent-fuel storage racks are top-entry racks designed to preclude the possibility of criticality under normal and abnormal conditions. The upper tieplate of the fuel elements rests against the rack to provide lateral support. The lower tieplate sits in the bottom of the rack, which supports the weight of the fuel.

(6) The rack arrangement is designed to prevent accidental insertion of fuel assemblies or bundles between adjacent modules. The storage rack is designed to provide accessibility to the fuel bail for grappling purposes.

9.1.2.3 Safety Evaluation

9.1.2.3.1 Criticality Control

The spent-fuel storage racks are purchased equipment. The purchase specification for the spent-fuel storage racks will require the vendor to provide the information requested in Question 430.190 on criticality analysis of the spent-fuel storage, including the uncertainity value and associated probability and confidence level for the k_{eff} value. See Subsection 9.1.6.3 for COL license information requirements.

9.1.2.3.2 Structural Design and Material Compatibility Requirements

(1) The spent-fuel pool racks provide storage for a minimum of *270% of the reactor core.*

(2) The fuel storage racks are designed to be supported ~~above~~ vertically by *the pool floor ~~by a support structure~~. The ~~support~~* fuel storage rack *~~structure~~ allows sufficient pool water flow for natural convection cooling of the stored fuel. ~~Since the~~* The fuel rack *modules are freestanding (i.e., ~~no supports above the base~~* the racks are not attached to the floor and can be removed*), ~~the support structure also provides the required dynamic stability.~~* The spent fuel rack modules are interconnected at the top with crosses between inner modules and with external tube supports around the peripheral modules. The complete spent fuel rack arrangement leaves a small clearance gap to the pool walls. These supports provide the spent fuel rack dynamic stability.

(3) The racks include individual solid tube storage compartments, which provide lateral restraints over the entire length of the fuel assembly or bundle.

(4) The racks are fabricated from materials used for construction and are specified in accordance with the latest issue of applicable ASTM specifications at the time of equipment order.

(5) Lead-in guides at the top of the storage spaces provide guidance of the fuel during insertion.

(6) The racks are designed to withstand, while maintaining the nuclear safety design basis, the impact force generated by the vertical free-fall drop of a fuel assembly from a height of 1.8m.

(7) The rack is designed to withstand a pullup force of 17.79 kN and a horizontal force of 4.45 kN.

(8) The fuel storage racks are designed to handle irradiated fuel assemblies. The expected radiation levels are well below the design levels.

The fuel storage facilities will be designed to Seismic Category I requirements to prevent earthquake damage to the stored fuel.

The fuel storage pools have adequate water shielding for the stored spent fuel. Adequate shielding for transporting the fuel is also provided. Liquid level sensors are installed to detect a low pool water level, and adequate makeup water is available to assure that the fuel will not be uncovered should a leak occur.

Since the fuel storage racks are made of noncombustible materials and are stored under water, there is no potential fire hazard. The large water volume also protects the spent-fuel storage racks from potential pipe breaks and associated jet impingement loads.

Fuel storage racks are made in accordance with the latest issue of the applicable ASTM specification at the time of equipment order. The storage tubes are permanently marked with identification traceable to the material certifications. The fuel storage tube assembly is compatible with the environment of treated water and provides a design life of 60 years, including allowances for corrosion.

Regulatory Guide 1.13 is applicable to spent-fuel storage facilities. The Reactor Building contains the fuel storage facilities, including the storage racks and pool, and is designed to protect the fuel from damage caused by:

(1) Natural events such as earthquake, high winds and flooding

(2) Mechanical damage caused by dropping of fuel assemblies bundles, or other objects onto stored fuel

9.1.2.4 Summary of Radiological Considerations

By adequate design and careful operational procedures, the safety design bases of the spent-fuel storage arrangement are satisfied. Thus, the exposure of plant personnel to radiation is maintained well below published guideline values. Further details of radiological considerations, including those for the spent-fuel storage arrangement, are presented in Chapter 12.

The pool liner leakage detection system and water level monitoring system, including the corrective action for loss of heat removal capability, are discussed in Subsection 9.1.3. The radiation monitoring system and the corrective action for excessive radiation levels are discussed in Subsections 11.5.2.1.2 and 11.5.2.1.3.

9.1.3 Fuel Pool Cooling and Cleanup System

9.1.3.1 Design Bases

The Fuel Pool Cooling and Cleanup (FPC) System is a non-safety-related system designed to remove the decay heat from the fuel pool, maintain pool water level and quality and remove radioactive materials from the pool to minimize the release of radioactivity to the environs.

The FPC System shall*:*

(1) Minimize *corrosion product buildup and shall control water clarity, so that the fuel assemblies can be efficiently handled underwater.*

(2) Minimize *fission product concentration in the water which could be released from the pool to the Reactor Building environment.*

(3) Monitor *fuel pool water level and maintain a water level above the fuel sufficient to provide shielding for normal building occupancy.*

(4) Maintain the pool water temperature below 52°C under normal operating conditions. The temperature limit of 52°C is set to establish an acceptable environment for personnel working in the vicinity of the fuel pool. The design basis for the FPC System is to provide cooling after closure of the fuel gates at the completion of refueling (21 days after shutdown). The normal design basis heat load at this time is the sum of decay heat of the most recent 35% spentfuel batch plus the heat from the previous four fuel batches after closure of the fuel gates. The Residual Heat Removal (RHR) System ~~*RHR System*~~ *will be used to supplement the FPC System under the maximum* heat *load condition as defined in Subsection 9.1.3.2.*

9.1.3.2 System Description

The FPC System (Figures 9.1-1 and 9.1-2, and Table 9.1-11) maintains the spent-fuel storage pool below the desired temperature at an acceptable radiation level and at a degree of clarity necessary to transfer and service the fuel bundles.

The FPC System cools the fuel storage pool by transferring the spent fuel decay heat through two 6.91 GJ/h heat exchangers to the Reactor Building ~~*Closed*~~ *Cooling Water (RCW) System. Each of the two heat exchangers is designed to transfer one half of the system design heat load. The FPC System utilizes two parallel 250 m^3/h pumps to provide a system design flow of 500 m^3/h. Each pump is suitable for continuous duty operation. The equipment is located in the Reactor Building.*

The system pool water temperature is maintained at or below 52°C. The decay heat released from the stored fuel is transferred to the RCW System. During refueling prior to 21 days following shutdown, the reactor (shutdown cooling) and fuel pool cooling are provided jointly by the RHR and FPC Systems in parallel. The reactor cavity communicates with the fuel pool, since the reactor well is flooded and the fuel gates are open. RHR suction is taken from the vessel shutdown suction lines, pumped through RHR heat exchangers and discharged into the upper pools to improve water clarity for refueling. For the FPC System, fuel pool water is circulated by means of overflow through skimmers around the periphery of the pool and a scupper at the end of the transfer pool drain tanks, pumped through the FPC heat exchangers and filter-demineralizers and back to the pool through the pool diffusers.

After 21 days the fuel pool heat exchangers are capable of maintaining the spent fuel pool temperature below 52°C at the normal heat load from the decay heat of the most recent 35% batch of discharged fuel plus the 4 previous batches stored in the pool. If the fuel pool gates are installed prior to 21 days, or if more than 35% of the most recent batch of fuel is stored in the pool (maximum heat load condition) it may be necessary to utilize one of the three *RHR* ~~*systems*~~ loops *to supplement the cooling of the spent fuel pool. Supplemental cooling from RHR can be achieved by aligning the* ~~*RHR*~~ A*, B*, *or C* loop *in the fuel pool cooling mode. In the fuel pool cooling mode of RHR a suction is taken from the skimmer surge tanks, passed through an RHR heat exchanger, and returned to the fuel pool.* ~~*In the event one of the RHR systems is aligned in the fuel pool cooling mode it is permissible for that system to be counted as one of the minimum required Emergency Core Cooling systems during shutdown (Modes 4 or 5) as long as the system can be manually realigned and the system is otherwise operable.*~~

Clarity and purity of the pool water are maintained by a combination of filtering and ion exchange. The filter-demineralizers maintain suspended solids below 1.0 ppm, *total corrosion product metals ~~at~~* below *30 ppb, ~~or less with~~* and the *pH range of 5.6 to 8.6 at 25°C for compatibility with fuel storage racks and other equipment. Conductivity is maintained at less than 1.2 μS/cm at 25°C and chlorides less than 20 ppb. Each filter unit in the filter-demineralizer subsystem has adequate capacity to maintain the desired purity level of the pools under normal operating conditions. The flow rate is designed to be ~~approximately~~ that required for two complete water changes per day for the fuel transfer and storage pools. The maximum system flow rate is twice that needed to maintain the specified water quality.*

The FPC System is designed to remove suspended or dissolved impurities from the following sources:

(1) Dust or other airborne particles

(2) Surface dirt dislodged from equipment immersed in the pool

(3) Crud and fission products emanating from the reactor or fuel bundles during refueling

(4) Debris from inspection or disposal operations

(5) Residual cleaning chemicals or flush water

A post-processed strainer in the effluent stream of the filter-demineralizer limits the migration of filter material. The filter-holding element can withstand a differential pressure greater than the developed pump head for the system.

The filter-demineralizer units are located separately in shielded cells with enough clearance to permit removing filter elements from the vessels.

Each cell contains only the filter-demineralizer and piping. All valves (inlet, outlet, recycle, vent, drain, etc.) are located on the outside of one shielding wall of the room, together with necessary piping and headers, instrument elements and controls. Penetrations through shielding walls are located so as not to compromise radiation shielding requirements.

The filter-demineralizers are controlled from a local panel. A differential pressure and conductivity instruments provided for each filter-demineralizer unit indicate when backwash is required. Suitable alarms, differential pressure indicators and flow indicators monitor the condition of the filter-demineralizers.

System instrumentation is provided for both automatic and remote-manual operations. A low–low level switch stops the circulating pumps when the fuel pool skimmer-surge tank reserve capacity is reduced to the volume that can be pumped in approximately one minute with one pump at rated capacity (250 m^3/h). A level switch is provided in the fuel pool to alarm locally and in the control room on high and low level. Temperature elements are provided to display and alarm pool temperature and inlet temperature to

the filter-demineralizers in the main control room. In addition, leakage flow detectors in the pool drains and pool liners are provided and alarmed in the control room.

The circulating pumps are controlled from the control room and a local panel. Pump low suction pressure automatically shuts off the pumps. A pump low discharge pressure alarm is indicated in the control room and on the local panel. The circulating pump motors are powered from the normal offsite sources backed by the combustion turbine generators.

The water level in the spent-fuel storage pool is maintained at a height sufficient to provide shielding for normal building occupancy. Radioactive particulates removed from the fuel pool are collected in filter-demineralizer units which are located in shielded cells. For these reasons, the exposure of plant personnel to radiation from the FPC System is minimal. Further details of radiological considerations for this system are provided in Chapter 12.

The circulation patterns within the reactor well and spent-fuel storage pool are established by placing the diffusers and skimmers so that particles dislodged during refueling operations are swept away from the work area and out of the pools.

Check valves prevent the pool from siphoning in the event of a pipe rupture.

Heat from pool evaporation is handled by the building ventilation system. Makeup water is provided through a remote-operated valve.

9.1.3.3 Safety Evaluation

The maximum possible heat load for the FPC System upon closure of the fuel gates (21 days) is the decay heat of the full core load of fuel at the end of the fuel cycle plus the remaining decay heat of the spent fuel discharged at previous refuelings upon closure of the fuel gates ; the maximum capacity of the spent-fuel storage pool is taken as *270% of a core* for the bounding heat load evaluation*. The temperature of the fuel pool water may be permitted to rise to approximately 60°C under these conditions. During cold shutdown conditions, if it appears that the fuel pool temperature will exceed 52°C, the operator can connect the FPC System to the RHR System. Combining the capacities enables the two systems to keep the water temperature below 52°C. The RHR System will be used only to supplement the fuel pool cooling when the reactor is shut down. The reactor will not be started up whenever portions of the RHR System are needed to cool the fuel pool.*

These connections may also be utilized during emergency conditions to assure cooling of the spent fuel regardless of the availability of the FPC System. The volume of water in the storage pool is such that there is enough heat absorption capability to allow sufficient time for switching over to the RHR System for emergency cooling.

During the initial stages of refueling, the reactor cavity communicates with the fuel pool, since the reactor well is flooded and the fuel pool gates are open. Decay heat removal is provided jointly by the RHR and FPC Systems and the pool temperature kept below 60°C. Evaluation studies concluded that after 150 hours decay following shutdown

(fuel pool gates open*), the combined decay heat removal capacity of the 1-RHR and 1-FPC heat exchangers (single active failure postulated) can keep the pool temperature well below 60°C. The RHR-FPC joint decay heat removal performance evaluation is shown in Table 9.1-12.*

The spent-fuel storage pool is designed so that no single failure of structures or equipment will cause inability to:

(1) Maintain irradiated fuel submerged in water

(2) Re-establish normal fuel pool water level

(3) Remove decay heat from the pool

In order to limit the possibility of pool leakage around pool penetrations, the pool is lined with stainless steel. In addition to providing a high degree of integrity, the lining is designed to withstand possible abuse when equipment is moved. No inlets, outlets or drains are provided that might permit the pool to be drained below a safe shielding level, i.e. below a point 3m above the top of active fuel located in the spent fuel storage racks. Lines extending below this level are equipped with siphon breakers, check valves, or other suitable devices to prevent inadvertent pool drainage. Interconnected drainage paths are provided behind the liner welds. These paths are designed to:

(1) Prevent pressure buildup behind the liner plate

(2) Prevent the uncontrolled loss of contaminated pool water to other relatively cleaner locations within the containment or fuel-handling area

(3) Provide liner leak detection and measurement

These drainage paths are designed to permit free gravity drainage to the equipment drain tanks or sumps of sufficient capacity and/or pumped to the Radwaste Building.

~~*A makeup water system*~~The Makeup Water Condensate System(MUWC)~~*and*~~ in conjunction with *pool water level instrumentation* ~~*are provided*~~ provide normal makeup water *to replace evaporative and leakage losses* from the fuel pool*.* ~~*Makeup water during normal operation will be supplied from condensate*~~ *The Suppression Pool Cleanup (SPCU) System can also be used as a Seismic Category I source of makeup water in case of failure of* ~~*the normal Makeup Water System*~~ MUWC makeup capability.

Both FPC and SPCU Systems are Seismic Category I, Quality Group C design with the exception of the filter-demineralizer portion, which is shared by both systems. Following an accident or seismic event, the filter-demineralizers are isolated from the FPC cooling portion ~~*and the SPCU System*~~ *by two block valves in series at* ~~*both*~~ *the inlet and* one block valve and one check valve at the *outlet of the common filter-demineralizer* ~~*portion*~~ piping*. Seismic Category I, Quality Group C bypass lines are provided on* ~~*both*~~the *FPC* ~~*and SPCU*~~ *System*~~*s*~~ *to allow continued flow of cooling*. ~~*and makeup water to the spent fuel pool.*~~

Connections from the RHR System to the FPC System provide a Seismic Category I, safety-related makeup capability to the spent-fuel pool. The FPC System from the RHR connections to the spent-fuel pool are Seismic Category I, safety-related. The manual valves which permit the RHR System to take suction from the spent-fuel storage pool and cool the pool are accessible following an accident in sufficient time to permit an operator to align the RHR System to prevent the spent-fuel storage pool from boiling.

Furthermore, fire hoses can be used as an alternate makeup source. The fire protection standpipes in the Reactor Building and their water supply (yard main, one diesel engine driven pump and water source) are seismically designed. A second fire pump, driven by a motor powered from the combustion turbine generator, is also provided. Engineering analysis indicates that, under the maximum abnormal *heat load with the pool gates closed and no pool cooling taking place, the pool temperature will reach about 100°C in about 16 hours. This provides sufficient time for the operator to hook up fire hoses for pool makeup. ~~The COL applicant will develop detailed~~* Detailed *procedures and operator training* will be developed *for providing firewater makeup to the spent-fuel pool. See Subsection 9.1.6.9 for COL license information.*

The FPC components, housed in the Seismic Category I Reactor Building, are Seismic Category I, Quality Group C, including all components except the filter-demineralizer. These components are protected from the effects of natural phenomena, such as: earthquake, external flooding, wind, tornado and external missiles. The FPC System is non-safety-related with the exception of the RHR System connections for safety-related makeup and supplemental cooling. The RHR System connections will be protected from the effects of pipe whip, internal flooding, internally generated missiles, and the effects of a moderate pipe rupture within the vicinity. See Subsection 9.1.6.10 for COL license information.

From the foregoing analysis, it is concluded that the FPC System meets its design bases.

9.1.3.4 Inspection and Testing Requirements

No special tests are required because, normally, one pump, one heat exchanger and one filter-demineralizer are operating while fuel is stored in the pool. The spare unit is operated periodically to handle abnormal heat loads or to replace a unit for servicing. Routine visual inspection of the system components, instrumentation and trouble alarms is adequate to verify system operability.

9.1.3.5 Radiological Considerations

The water level in the spent-fuel storage pool is maintained at a height which is sufficient to provide shielding for normal building occupancy. Radioactive particulates removed from the fuel pool are collected in filter-demineralizer units which are located in shielded cells. For these reasons, the exposure of plant personnel to radiation from the FPC System is minimal. Further details of radiological considerations for this and other systems are described in Chapters 11, 12, and 15.

9.1.4 Light Load Handling System (Related to Refueling)

9.1.4.1 Design Bases

The fuel-handling system is designed to provide a safe and effective means for transporting and handling fuel from the time it reaches the plant until it leaves the plant after post-irradiation cooling. Safe handling of fuel includes design considerations for maintaining occupational radiation exposures as low as reasonably achievable (ALARA).

Design criteria for major fuel-handling system equipment are provided in Tables 9.1-2 through 9.1-4, which list the safety class, quality group and seismic category. Where applicable, the appropriate ASME, ANSI, Industrial and Electrical Codes are identified. Additional design criteria are shown below and expanded further in Subsection 9.1.4.2.

The transfer of new fuel assemblies between the uncrating area and the new-fuel inspection stand and/or the new-fuel storage vault to the fuel storage pool is accomplished using a ~~49.82~~49.82 kN auxiliary hoist on the R/B crane ~~equipped with a general purpose grapple~~. From this point on, the fuel will ~~either~~ be handled by the telescoping grapple ~~(or auxiliary hoist)~~ on the refueling machine.

The refueling machine is Seismic Category I ~~from a structural standpoint in accordance with 10CFR50, Appendix A~~. The refueling machine is constructed in accordance with a quality assurance program that ensures the design, construction and testing requirements are met. Allowable stress due to safe shutdown earthquake (SSE) loading is 120% of yield or 70% of ultimate, whichever is least. A dynamic analysis is performed on the structures using the response spectrum method with load contributions resulting from each of three directions acting simultaneously being combined by the RMS procedure. Working loads and allowable stresses *of the machine structure are in accordance with the AISC Manual of Steel Construction. All parts of the hoist systems are designed to have a safety factor of at least ten, based on the ultimate strength of the material. A redundant load path is incorporated in the* refueling machine *fuel hoists so that no single component failure could result in a fuel bundle drop. Maximum deflection limitations are imposed on the main structures to maintain relative stiffness of the platform. Welding of the machine is in accordance with* AWS D1.1, *AWS D14.1 or ASME Boiler and Pressure Vessel Code Section IX. ~~Gears and bearing meet AGMA Gear Classification Manual and ANSI B3.5.~~ Materials used in construction of load bearing members are to ASTM specifications. For personnel safety, OSHA Part 1910.179 is applied. Electrical equipment and controls meet ANSI CI, National Electric Code, and NEMA Publication No. ICS1, MG1.*

~~The auxiliary fuel grapple and the~~ The *main telescoping fuel grapple ~~have~~* has *redundant lifting features and an indicator which confirms positive grapple engagement.*

The fuel grapple is used for lifting and transporting fuel bundles. It is designed as a telescoping grapple that can extend to the proper work level and, in its fully retracted state, still maintain adequate water shielding over the top of the active *fuel* (TAF) *of 2591 mm (8.5 ft).*

In addition to redundant electrical interlocks to preclude the possibility of raising radioactive material out of the water, the cables on the auxiliary hoists incorporate an adjustable, removal stop that will jam the hoist cable against some part of the platform structure to prevent hoisting when the free end of the cable is at a preset distance below water level.

Provision of a separate cask pit, capable of being isolated from the fuel storage pool, will eliminate the potential accident of dropping the cask and rupturing the fuel storage pool. Furthermore, limitation of the travel of the crane handling the cask will preclude transporting the cask over the spent-fuel storage pool.

9.1.4.2 System Description

Table 9.1-5 is a listing of typical tools and servicing equipment supplied with nuclear system. The following paragraphs describe the use of some of the major tools and servicing equipment and address safety aspects of the design where applicable.

Subsection 9.1.5 provides the data that verifies the ABWR Standard Plant heavy load handling systems and satisfies the guidelines of NUREG-0612.

9.1.4.2.1 Spent Fuel Cask

~~*Out of ABWR Standard Plant scope.*~~ A description of the load handling equipment, decontamination provisions and major steps necessary to bring a spent fuel cask into the R/B is provided in Subsections 9.1.4.2.2.1, 9.1.4.3 (safety evaluation), and 9.1.4.2.10.3.

Specific details of an actual DOT approved spent fuel cask will not be available until an equipment vendor is selected at a future date. The design details of any proposed shipping cask, including any unique features or design provisions associated with safe lifting and handling in the R/B with the lifting equipment described in this section, will be provided in a future FSAR amendment in accordance with 10 CFR 50.71 (e).

9.1.4.2.2 Overhead Bridge Cranes

9.1.4.2.2.1 Reactor Building Crane

The Reactor Building (R/B) crane is a seismically analyzed piece of equipment. The crane consists of two crane girders and a trolley which carries two hoists. The runway track, which supports the crane girders, is supported from the R/B walls at elevation 34,600 mm*. The trolley travels laterally on the crane girders carrying the main hoist and auxiliary hoist.*

The R/B crane is used to move all of the major components (reactor shield plugs, reactor pressure vessel (RPV) head insulation, reactor *vessel head, shroud head and separator, dryer assembly and pool gates) as required by plant operations. The R/B crane is used for handling new fuel from the R/B entry hatch to new fuel storage,* to *the new fuel inspection stand and the spent-fuel pool. It also is used for handling the spent fuel cask. The principal design criteria for the R/B crane are described in Subsection 9.1.5.*

9.1.4.2.3 Fuel Servicing Equipment

The fuel servicing equipment described below has been designed in accordance with the criteria listed in Table 9.1-2. Items not listed as Seismic Category I, such as hoists, tools and other equipment used for servicing, shall either be removed during operation, moved to a location where they are not a potential hazard to safety-related equipment, or seismically restrained to prevent them from becoming missiles.

9.1.4.2.3.1 Fuel Prep Machine

Two fuel preparation machines (Figure 9.1-3) are mounted on the wall of the spent-fuel pool and are used for ~~stripping reusable channels from the spent fuel and for~~ channeling and *rechanneling of ~~the~~ new* and spent *fuel* assemblies*. The machines are ~~also~~ used with ~~the~~ fuel inspection ~~fixture~~* fixtures *to provide an underwater inspection capability.* The fuel prep machines also serve as a staging location to allow movement of new or spent fuel assemblies into the spent fuel pool storage racks.

Each fuel preparation machine consists of a work platform, a frame, and a movable carriage. The frame and movable carriage are located below the normal water level in the spent fuel pool, thus providing a water shield for the fuel assemblies being handled. The fuel preparation machine carriage has a permanently installed up-travel-stop to prevent raising fuel above the safe water shield level.

9.1.4.2.3.2 New-Fuel Inspection Stand

The new-fuel inspection stand ~~(Figure 9.1-4~~ serves as a support for the new-fuel bundles undergoing receiving inspection and ~~provides~~ allows *~~a working platform for~~ technicians engaged in performing the inspection* to stand on the refueling floor and examine the assembly as it is passed up and down in front of the inspector*.*

The new-fuel inspection stand consists of a vertical guide column, a lift unit to position the ~~work platform~~ fuel assembly *at any desired level,* and *bearing seats and upper clamps to hold the fuel bundles in* a vertical *position.*

The new-fuel inspection stand ~~will be firmly attached~~ is anchored into a pit on the refueling floor *so that it ~~does not~~* cannot *fall ~~into or dump personnel into the spent fuel pool~~ or tip, and* will retain the fuel assembly and maintain the structural integrity of the stand *during an SSE. ~~(See Subsection 9.1.6.5 for COL license information requirements.)~~*

9.1.4.2.3.3 Channel Bolt Wrench

*The channel bolt wrench (Figure 9.1-5) is a manually operated device approximately ~~3.76~~*3.8*m in overall length. The wrench is used for removing and installing the channel fastener assembly while the fuel assembly is held in the fuel preparation machine. The channel bolt wrench has a socket which mates and captures the channel fastener capscrew.*

9.1.4.2.3.4 Channel-Handling Tool

The channel-handling tool (Figure 9.1-6) is used in conjunction with the fuel preparation machine to remove, install, and transport fuel channels in the spent fuel pool.

The tool is composed of a handling bail, a lock/release knob, extension shaft, angle guides and clamp arms which engage the fuel channel. The clamps are actuated (extended or retracted) by manually rotating the lock/release knob.

The channel-handling tool is suspended by its bail from a spring balancer on the channel-handling boom located on the spent fuel pool periphery.

9.1.4.2.3.5 ~~*Fuel Pool Vacuum Sipper*~~Not Used

~~*The fuel pool vacuum sipper (Figure 9.1-7) provides a is one means of identifying fuel suspected of having cladding failures. The fuel pool vacuum sipper consists of a fuel isolation container, fluid console, monitoring console with program controller and beta detector and the interconnecting tubing and cables. The suspected fuel assembly is placed in the isolation container. A partial vacuum is established in the gas volume above the fuel assembly. The fission product gas leakage is sensed by the beta detector and monitoring console.*~~

9.1.4.2.3.6 General-Purpose Grapple

The general-purpose grapple (Figure 9.1-8) is a handling tool used generally with the fuel. The grapple can be attached to ~~the jib crane to handle fuel during channeling, or~~ the refueling machine auxiliary hoist.

9.1.4.2.3.7 Jib Crane

The jib crane consists of a motor-driven boom monorail and a motor-driven trolley with an electric hoist. The jib crane is mounted along the edge of the storage pool to be used during refueling operations. Use of the jib crane leaves the refueling machine free to perform general fuel shuffling operations and still permit uninterrupted fuel preparation in the work area. The hoist has two full-capacity brakes and in-series adjustable up-travel limit switches. Upon hoisting, the first of two independently adjustable limit switches automatically stop the hoist cable terminal approximately 2.4m below the jib crane base. Continued hoisting is possible by depressing a momentary contact (up-travel override pushbutton on the pendant) together with a normal hoisting pushbutton. The second independently adjustable limit switch automatically interrupts hoist power at the maximum safe uptravel limit. When the jib crane is used in the handling of hazardous radioactive materials that must be kept below a specific water level, a fixed mechanical stop is installed on the hoist cable to prevent further hoisting when that travel is reached.

9.1.4.2.3.8 Refueling Machine

Refer to Subsection 9.1.4.2.7.1 for a description of the refueling machine.

9.1.4.2.3.9 Channel Handling Boom

A channel handling boom ~~(Figure 9.1-10)~~ with a spring-loaded balance reel is used to assist the operator in supporting a portion of the weight of the channel as it is removed from the fuel assembly. The boom is set between the fuel preparation machines. With the channel handling tool attached to the reel, the channel may be conveniently moved between the fuel preparation machines.

9.1.4.2.4 Servicing Aids

General area underwater lights are provided with a suitable reflector for illumination. Suitable light support brackets are furnished to support the lights in the reactor vessel to allow the light to be positioned over the area being serviced independent of the platform. Local area underwater lights are small diameter lights for additional illumination. Drop lights are used for illumination where needed.

A radiation hardened portable underwater closed circuit television camera is provided. The camera may be lowered into the reactor vessel and/or spent fuel pool to assist in the inspection and/or maintenance of these areas.

A general purpose, plastic viewing aid is provided to float on the water surface to provide better visibility. The sides of the viewing aid are brightly colored to allow the operator to observe it in the event of filling with water and sinking. A portable, submersible-type, underwater vacuum cleaner is provided to assist in removing crud and miscellaneous particulate matter from the pool floors or reactor vessel. The pump and the filter unit are completely submersible for extended periods. The filter "package" is capable of being remotely changed, and the filters will fit into a standard shipping container for offsite burial. Fuel pool tool accessories are also provided to meet servicing requirements. ~~A fuel sampler is provided to detect defective fuel assemblies during open vessel periods while the fuel is in the core. The fuel sampler head isolates individual fuel assemblies by sealing the top of the fuel channel and pumping water from the bottom of the fuel assembly, through the fuel channel, to a sampling station, and returning the water to the primary coolant system. After a "soaking" period, a water sample is obtained and is radiochemically analyzed to determine possible fuel bundle leakage.~~

9.1.4.2.5 Reactor Vessel Servicing Equipment

The ~~essentiality and~~ safety classifications, the quality ~~group~~ requirements*, and the seismic category for this equipment are listed in Table 9.1-3. Following is a description of the equipment designs in reference to that table.*

9.1.4.2.5.1 Reactor Vessel Service Tools

These tools are used when the reactor is shut down and the reactor vessel head is being removed or reinstalled. Tools in this group are:

RPV Head Stud Tensioner System with RPV Head Strongback

Stud ~~Handling~~ Transfer *Tool*

~~Stud Wrench~~ Nut Rack and Nut and Washer Transfer Tool

~~Nut Runner~~

Stud Thread Protector

Thread Protector Mandrel

Bushing Wrench (if necessary)

Seal Surface Protector

Stud Elongation Measuring Rod

Dial Indicator Elongation Measuring Device

Head Guide Cap

RIP Impeller/Shaft ~~Assembly Tool~~ Handling Device (Grapple)

RIP Blanking Plug

Impeller Storage Rack

The tools are designed for a 60-year life in the specified environment. Lifting tools for lifting heavy tools *are designed for a safety factor of 10 or better with respect to the ultimate strength of the material used* or utilize a dual load path with a safety factor of 5 to 1 or better*. When carbon steel is used, it is either hard chrome plated, parkerized, or coated with an approved paint per Regulatory Guide 1.54.*

9.1.4.2.5.2 Steamline Plug

*The steamline plugs are used during reactor refueling or servicing; they are inserted in the steam outlet nozzles from inside of the reactor vessel to prevent a flow of water from the reactor into the main steamline during servicing of safety/relief valves, main steam isolation valves, or other components of the main steamlines, while the reactor water level is at the refueling level. The steamline plug design provides ~~two seals of different types.~~*three seals for waterhead. *Each one is independently capable of holding full head pressure.* Two seals are for MSIV leak test. *The equipment is constructed of corrosion-resistant materials. All calculated safety factors are 5 or better. The plug body ~~is~~*consists of stainless parts and aluminum parts. Aluminum parts are *designed in accordance with the "Aluminum Construction Manual" by the Aluminum Association.*

9.1.4.2.5.3 Shroud Head Stud Wrench

This is a hand-held tool for tightening and loosening the shroud head studs. It is designed for a 60-year life and is made of aluminum and stainless steel *for easy handling and to resist corrosion. Calculations have been performed to confirm the design.*

9.1.4.2.5.4 Head Holding Pedestal

Three pedestals are provided for mounting on the refueling floor for supporting the reactor vessel head and strongback/carousel during periods of reactor service. The pedestals have studs which engage three evenly spaced stud holes in the head flange. The flange surface rests on replaceable wear pads made of aluminum.

When resting on the pedestals, the head flange is approximately 0.9m above the floor to allow access to the seal surface for inspection and O-ring replacement.

The pedestal structure is a carbon steel weldment coated with an approved paint. It has a base with bolt holes for mounting it to the concrete floor.

A seismic analysis was made to determine the seismic forces imposed onto the pedestals and floor anchors, using the floor response spectrum method. The structure is designed to withstand these calculated forces and meet the requirements of AISC.

9.1.4.2.5.5 Head Stud Rack

The head stud rack is used for transporting and storage of eight RPV studs and is suspended from the R/B crane hook when lifting studs from the reactor well to the operating floor.

The rack is made of aluminum to resist corrosion and is designed for a safety factor of 5 with respect to the ultimate strength of the material.

The structure is designed in accordance with the "Aluminum Construction Manual" by the Aluminum Association.

9.1.4.2.5.6 Dryer and Separator Strongback

The dryer and separator strongback is a lifting device used for transporting the steam dryer or the shroud head with the steam separators between the reactor vessel and the storage pools. The strongback is a cruciform-shaped I-beam structure, which has a hook box with two hook pins in the center for engagement with the R/B crane sister hook. The strongback has a socket with a pneumatically operated pin on the end of each arm for engaging it to the four lift eyes on the steam dryer or shroud head.

The strongback has been designed such that one hook pin and one main beam of the cruciform will be capable of carrying the total load and so that no single component failure will cause the load to drop or swing uncontrollably out of an essentially level attitude. The safety factor of all lifting members is 10 or better in reference to the ultimate breaking strength of the materials.

The structure is designed in accordance with "The Manual of ~~Shell~~ Steel *Construction" by AISC. The completed assembly is proof-tested ~~at 125% of rated load,~~* per ANSI N14.6, *and all structural welds are magnetic particle inspected after load test.*

9.1.4.2.5.7 ~~Head Strongback/Carousel~~ RPV Head Stud Tensioner System with RPV Head Strongback

*The ~~RPV head~~*RPV Head Stud Tensioner System with RPV Head Strongback *~~strongback/carousel~~ is an integrated piece of equipment consisting of a ~~cruciform-shaped strongback, a circular monorail and a circular storage tray~~* cruciform shaped strongback, rotating table, stud tensioner, stud and nut handling tools, stud cleaning tool, a nut and washer rack, and service platform.

The strongback is a ~~box~~ beam structure which has a hook box with two hook pins in the center for engagement with the reactor service crane sister hook. Extending from the center section are arms to connect to the RPV head lifting lugs. *~~Each arm has~~* The four arms have *~~a~~* lift *~~rod~~* rods *for engagement to the four lift lugs on the RPV head. ~~The monorail is mounted on extensions of the strongback arms and four additional arms equally spaced. between the strongback arms. The monorail circle matches the stud circle of the reactor vessel and serves to suspend stud tensioners and nut handling devices. The storage tray is suspended from the ends of the same eight arms and surrounds the RPV flange. The head strongback/carousel~~* The rotating table suspends four stations. Each station consists of a stud tensioner, a stud and nut handling tool and a stud cleaning tool. The rotating table positions the four stations to the target studs of the reactor vessel. The RPV Head Stud Tensioner System with RPV Head Strongback serves the following functions:

(1) ***Lifting of Vessel Head—****The strongback, when suspended from the R/B crane main hook, will transport* the *RPV head plus the ~~carousel~~* rotating ~~frame~~table *with all its attachments between the reactor vessel and storage on the pedestals.*

(2) ***Tensioning of Vessel Head Closure—****The ~~carousel,~~* strongback with rotating ~~frame~~table, *when supported on the RPV head on the vessel, will ~~carry~~*suspend *~~tensioners,~~ its own weight,* the four stations of stud and nut tools, *the strongback,* a *storage of nuts~~,~~* and *washers, ~~thread protectors~~, and associated tools and equipment.*

(3) ***Storage with RPV Head—****The ~~carousel,~~* strongback with rotating table, *when stored with the RPV head holding pedestals, ~~carries~~*suspends *the same load ~~for~~*as listed in *(2) above.*

(4) ***Storage without RPV Head—****During reactor operation, the ~~carousel~~* RPV Head Stud Tensioner System with RPV Head Strongback *is stored on ~~the refueling floor~~* four stands provided for this equipment.

The strongback, with its lifting components, is designed to meet the Crane Manufacturers Association of America, Specification No. 70. The design provides a 15% impact allowance and a safety factor of 10 in reference to the ultimate strength of the material used. After completion of welding and before painting, the lifting assembly is proof load tested and all load-affected welds and lift pins are magnetic-particle inspected.

The steel structure is designed in accordance with the Manual of Steel Construction by AISC. Aluminum structures are designed in accordance with the Aluminum Construction Manual by the Aluminum Association.

The strongback is tested in accordance with American National Standard for overhead hoists ANSI B30.16, Paragraph 16-1.2.2.2, such that one hook pin and one main beam of the structure is capable of carrying the total load, and so that no single component failure will cause the load to drop or swing uncontrollably out of an essentially level attitude. The ASME Boiler and Pressure Vessel Code, Section IX (Welder Qualification) is applied to all welder~~r~~d structures.

Regulatory Guide 1.54 *— General compliance or alternate assessment for Regulatory Guide 1.54, which provides design criteria for protective coatings, may be found in Subsection 6.1.2.*

9.1.4.2.6 In-Vessel Servicing Equipment

In-vessel removal and replacement of reactor internal pumps (RIPs) is done using the hoists on the refueling machine and RIP handling tool controller. In-vessel tools for major RIP maintenance include:

- RIP impeller/shaft handling device
- RIP blanking plug
- RIP diffuser/stretch tube handling attachment

The instrument strongback attached to the ~~RBC~~ R/B crane *auxiliary hoist is used for servicing the local power range neutron monitoring (~~PRNM~~* LPRM*), startup range neutron monitoring (SRNM), and dry tubes, should they require replacement. The strongback initially supports the dry tube into the vessel. The incore dry tube is then decoupled from the strongback and is guided into place while being supported by the instrument handling tool. Final incore insertion is accomplished from below the reactor vessel. The instrument handling tool is attached to the refueling machine auxiliary hoist and is used for removing and installing ~~PRNM~~* LPRM *fixed incore dry tubes as well as handling the SRNM dry tubes.*

9.1.4.2.7 Refueling Equipment

Fuel movement and reactor servicing operations are performed from the *~~platforms which~~* refueling machine that *~~span~~* spans *the refueling, servicing and storage cavities. The Reactor Building is supplied with a refueling machine for fuel movement and servicing, and an auxiliary platform for servicing operations from the ~~vessel flange~~* refueling floor *level.*

9.1.4.2.7.1 Refueling Machine

The refueling machine is a gantry crane, which is used to transport fuel and reactor components to and from pool storage and the reactor vessel. The machine spans the

spent fuel pool on bedded tracks in the refueling floor. A telescoping mast and grapple suspended from a trolley system is used to lift and orient fuel bundles for placement in the core or storage rack. Control of the machine is from an operator station on the refueling ~~floor~~ machine, or in-part from the remote operation panel in the refueling machine remote control room.

A position indicating system and travel limit computer is provided to locate the grapple over the vessel core and prevent collisions with pool obstacles. Two auxiliary hoists of 4.71 kN and ~~9.81~~ 14.71 *kN capacity, ~~one main and one auxiliary monorail trolley-mounted,~~ are provided for incore servicing. The grapple in its retracted position provides sufficient water shielding over the active fuel during transit. The fuel grapple hoist has a redundant load path so that no single component failure will result in a fuel bundle drop. Interlocks on the machine:*

(1) Prevent hoisting a fuel assembly over the vessel with a control rod removed

(2) Prevent collision with fuel pool walls or other structures

(3) Limit travel of the fuel grapple

(4) Interlock grapple hook engagement with hoist load and hoist up power

(5) Ensure correct sequencing of the transfer operation in the automatic or manual mode

The seismic category of the refueling machine is Seismic Class I. The refueling machine is designed to withstand the SSE without structural failure. A standard dynamic analysis using the appropriate response spectra is performed to demonstrate compliance to design requirements. The fuel hoist is designed to meet the requirements of NUREG-0554, Single Failure Proof Cranes.

9.1.4.2.7.2 Auxiliary Platform

The auxiliary platform provides a reactor flange level working surface for in-vessel inspection and reactor internals servicing, and permits servicing access for the full vessel diameter. Typical operations to be performed are inservice inspections. No hoisting equipment is provided with this platform, as this function can be performed from the refueling machine. The platform operates on tracks at the reactor vessel flange level and is lowered into position by the reactor building crane using the dryer/separator strongback. The platform weighs approximately 17.79 kN and features 1.5m wide work areas and motorized travel. The platform power is supplied by a cable from the refueling floor elevation.

9.1.4.2.7.3 Fuel Assembly Sampler

~~*The fuel assembly sampler (Figure 9.1-9) provides a means of obtaining a water sample for radiochemical analysis from fuel bundles while installed in the core. The fuel assembly sampler consists of a sampling station, two sampling chambers and interconnecting tubing. The sampling chambers are lowered over four adjacent assemblies and samples are obtained of the water in the fuel channels.*~~

The fuel assembly sampler provides a means of obtaining a water sample for radiochemical analysis from fuel bundles while installed in the core. The fuel assembly sampler consists of a sampling head, a sampling chamber and interconnecting tubing. The sampling head consists of two sipping tubes. The refueling machine grapple with the sampling head is lowered over the fuel in the core to obtain the water samples.

9.1.4.2.8 ~~Storage Equipment~~ Fuel Pool Equipment Storage Racks

Specially designed equipment storage racks are provided. Additional storage equipment is listed on Table 9.1-5. For fuel storage racks description and fuel arrangement, see Subsections 9.1.1 and 9.1.2.

Defective fuel assemblies are placed in special fuel storage containers, which are stored in the equipment storage rack, both of which are designed for the defective fuel. These may be used to isolate leaking or defective fuel while in the fuel pool and during shipping. ~~Channels can also be removed from the fuel bundle while in a defective fuel storage container~~.

~~The fuel pool sipper may be used for out-of-core wet sipping at any time. They are used to detect a defective fuel bundle while circulating water through the fuel bundle in a closed system. The bail on the container head is designed not to fit into the fuel grapple.~~

Two control blade storage racks are provided for the storage of control blades. Equipment storage racks are provided for the long term storage of the RIP impeller and diffuser and a temporary storage rack is provided to assist in the removal of either the RIP impeller or diffuser from the reactor building pool. The equipment storage racks can hold the defective fuel container, control blades, fuel support castings, and the vacuum sipper fuel isolation canister.

9.1.4.2.9 Under-Reactor Vessel Servicing Equipment

The primary functions of the under-reactor vessel servicing equipment are to:

(1) Remove and install the major components of the fine motion *control rod drives* (FMCRD)

(2) Install and remove the neutron detectors

(3) Remove and install RIP motors

Table 9.1-4 lists the major *equipment ~~and tools~~ required for servicing. Of the equipment listed, the ~~equipment handling~~* undervessel rotating *platform and the FMCRD handling equipment are powered* electrically and *pneumatically.*

The FMCRD handling equipment is designed for the removal and installation of the fine motion *control rod drives* major components *from their housings. This equipment is used in conjunction with the ~~equipment handling~~* Undervessel Rotating *platform. It is designed in accordance with OSHA-1910.179, and American Institute of Steel Construction, AISC.*

The undervessel RIP installation and removal equipment includes a RIP motor elevator, RIP coupling tools, seal pressurization tools, and various measurement, tensioning, and torquing tools needed to decouple the RIP internal components from the RIP motor and seal the RIP casing against leakage of RPV water.

The undervessel rotating *platform provides a working surface for equipment and personnel performing work in the undervessel area. It is a polar platform capable of ~~rotating~~* covering a *360°* range*. This equipment is designed in accordance with the applicable requirements of OSHA (Vol 37, No. 202, Part 1910N), AISC, ANSI-C-1, National Electric Code.*

~~*The spring reel is used to pull the incore guide tube (ICGT) seal or incore detector into the ICGT during incore servicing*~~*.* The undervessel servicing equipment is used in conjunction with a rail system and various carts to transport RIP and FMCRD components and tools from outside the containment to the undervessel area.

The water seal cap is designed to prevent leakage of primary coolant from incore detector housings during detector replacement. It is designed to industrial codes and manufactured from corrosion-resistant material.

~~*The incore flange seal test plug is used to determine the pressure integrity of the incore flange O-ring seal. It is constructed of corrosion-resistant material.*~~

9.1.4.2.10 Fuel-Handling Tasks

The Fuel-Handling and Transfer System provides a safe and effective means of transporting and handling fuel from the time it reaches the plant until it leaves the plant after post-irradiation cooling. The following subsections describe the integrated fuel transfer system which ensures that the design bases of the fuel handling system and the requirements of Regulatory Guide 1.13 are satisfied.

9.1.4.2.10.1 Arrival of Fuel on Site

The new fuel is delivered to the plant on flatbed truck or railcar. The new fuel is delivered to the receiving stations in the Reactor Building (R/B) through the rail and truck entry door. There, the incoming new fuel is unloaded, ~~removed from their shipping crates~~ and moved up to the refueling floor for inspection and channeling.

9.1.4.2.10.2 Refueling Procedure

A general plant refueling and servicing sequence diagram is shown in Figure 9.1-12. Fuel handling procedures are shown in Figures 9.1-13 and 9.1-14 and described below. Typical R/B layouts are shown in Section 1.2 and component drawings of the principal fuel-handling equipment are shown in Figures 9.1-3 through ~~9.1-11~~ 9.1-8*.*

When the reactor is sufficiently cooled, the drywell head and *head insulation ~~and vessel head~~ are removed by the R/B crane and placed in their respective storage areas. The R/B crane and ~~cruciform-shaped strongback~~* the RPV Head Stud Tensioner System with RPV Head Strongback *will be used to handle the RPV head and attachments. The strongback is designed so that no single component failure will*

cause the load to drop or swing uncontrollably out of an essentially horizontal attitude. The RPV Head Stud Tensioner System with RPV Head Strongback is detached from the reactor building crane during stud de-tensioning or tensioning operations. Following stud de-tensioning operations, the reactor building crane is used to lift the RPV head using the previously mounted strongback with the tensioning system, and nut rack with nuts and washers.

The strongback attaches to the crane sister hook by means of an integral hook box and two hook pins. Each pin is capable of carrying the rated load. Each main beam of the ~~cruciform~~ strongback *is capable of carrying the rated load.*

On both ends of each leg are adjustable lifting rods, suspended vertically to attach the lifting legs to the RPV head. These rods are for adjustment for even four-point load distribution and allow for some flexibility in diametrical location of the lifting lugs on the head.

The maximum potential drop height is at the point where the head is lifted vertically from the vessel and before moving it horizontally to the head storage pedestals.

The shroud head load and the steam dryer load will both be lifted with the dryer/separator strongback.

This strongback is a cruciform shape with box-shaped adapters at the four ends. Each socket box has two compartments to accommodate the two different lug spacings on the dryer and on the shroud head. Pneumatically operated lifting pins will penetrate the sockets to engage the lifting lugs.

Each of the above strongbacks is load tested ~~at 125% rated load~~ per ANSI 14.6. *~~At~~* During *this test, measurements are taken before test load, under test load and after releasing load, to verify that deflections are within acceptable limits. A magnetic particle test of structural welds is performed after the load test to assure structural integrity.*

An outer seal (RPV Refueling Bellows) *exists around the vessel flange to seal the drywell from the reactor well.* The drywell to RPV refueling bellows acts as a mechanical barrier between the bulkhead of the drywell through a flanged connection to the reactor pressure vessel to retain water in the reactor well when the latter is flooded during the refueling operation. It acts as a water seal between the drywell head space and lower drywell chamber during refueling when the upper space is flooded with water. In addition the RPV refueling bellows is flexible enough to allow a differential movement of the vessel with respect to the drywell caused by thermal expansion of the structures and the vessel during normal plant operations.

Water is pumped into the reactor well. Once the reactor well is filled, the dryer and separator are removed and transferred to their storage areas within the dryer/separator (D/S) pit using the D/S strongback. The tools that *are used in these and subsequent reactor servicing operations are listed in Table 9.1-2. Once access to the core is possible, the refueling machine can relocate and move fuel assemblies to and from the pool storage racks.*

~~*Simultaneously, the*~~ The *RIP* motor*, FMCRD hydraulic* and electrical *system, and the Neutron Monitoring System may be serviced from beneath the vessel.*

During refueling, the refueling machine shuffles fuel in the reactor, *transfers the spent fuel from the core to the spent fuel pool* and transfers new fuel to the reactor. ~~*The spent fuel assembly is placed in the fuel preparation machine, where its channel is removed and fitted to the new fuel bundle previously placed in the machine. During channeling, the spent fuel bundle is placed in the storage racks by the refueling platform. The refueling platform then places another new fuel bundle in the fuel preparation machine for channeling.*~~

When refueling and servicing are completed, the reactor will be restored. The following steps are typical restoration procedure; *the steam separator assembly is replaced in the vessel*~~*, the steamline plugs removed*~~ *and the steam dryer returned to the vessel. At this point, the gates are installed, isolating the reactor well from the other pools. The reactor well is then drained to the main condenser. With the reactor well empty, the vessel and drywell heads are replaced.*

9.1.4.2.10.2.1 New Fuel Preparation

9.1.4.2.10.2.1.1 Receipt and Inspection of New Fuel

Generally, channeled fuel is shipped from the fuel vendor to the site in a stainless steel inner container (two fuel assemblies per container). This inner container is placed into a stainless steel outer container, secured in place, accelerometers may be installed to monitor shipping loads, and the containers are loaded onto a truck for delivery to the site. *The incoming new fuel* ~~*will be*~~ is removed from the truck and delivered ~~*to a receiving station within the Reactor Building (R/B). The crates are unloaded from the transport vehicle and*~~ directly to the refueling floor near the new fuel storage vault where the new fuel is *examined for damage during shipment.*

On the refueling floor, using the auxiliary hoist on the R/B Crane, the outer container lid is removed, accelerometers (if used) are checked, and the inner container lid is removed. The new fuel is removed from the inner container and moved to one of the following locations:

- New fuel vault for temporary storage
- New fuel vault for further inspection
- Fuel prep machine for storage in the spent fuel pool
- New fuel inspection stand for further inspection

~~The new fuel arrives in its wooden crate at the plant where it is moved to a secure area and the inner metal shipping container is removed from the outer wooden box. *The* wooden *crate dimensions are approximately 813 x 813 x 5486 mm. Each crate contains* one metal RA container that contains *two fuel bundles* assemblies *supported by an inner metal container. Shipping* The shipping *weight of each unit is*~~

~~*approximately 13.35 kN.* It is then moved to the Reactor building via the rail and truck entry door. The inner RA container is then lifted to the refueling floor by the R/B crane. *The receiving station shall include a separate area where the crate cover and the inner metal container can be removed from the crate. Both inner and outer shipping containers are reusable. Handling during uncrating is accomplished by use of the R/B cranes. The inner container is tilted to a position which is almost vertical, while the fuel bundles are unstrapped and removed from the container with the R/B crane. They are then transported to storage in the new fuel storage racks located in the new fuel storage vault or to the new fuel inspection stand located on the refueling floor.*~~

~~*The actual inspection of the new fuel is normally deferred until all the reusable containers are emptied and the area around the new fuel vault cleared. At that time, the individual fuel bundles are removed from the vault, inserted in the new fuel inspection stand, dimensionally and visually inspected, and returned to the storage vault to await assembly with channels. The new fuel inspection stand accommodates two fuel assemblies at one time.*~~

9.1.4.2.10.2.1.2 Channeling New Fuel

The new fuel can be channeled using new channels in the new fuel inspection stand. ~~*New fuel is unloaded from the new fuel vault and transported to the fuel racks in the spent fuel pool. Usually, channeling new fuel is done concurrently with dechanneling spent fuel. Two fuel preparation machines are located in the spent fuel pool, one used for dechanneling spent fuel and the other to channel new fuel. The*~~ If previously irradiated channels are to be used, the *procedure is as follows:*

> *Using the refueling platform, a spent fuel bundle is transported to the fuel prep machine. The channel is unbolted from the bundle using the channel bolt wrench. The channel handling tool is fastened to the top of the channel and the fuel prep machine carriage is lowered removing the fuel from the channel. The channel is then positioned over a new-fuel bundle located in fuel prep machine No. 2 and the process reversed. The channeled new fuel is stored in the pool storage racks ready for insertion into the reactor.*

9.1.4.2.10.2.1.3 Equipment Preparation

Another ingredient in a successful refueling outage is equipment and new fuel readiness. Equipment long lying dormant must be brought to life. All tools, grapples, slings, strongbacks, stud tensioners, etc., will be given a thorough inspection and operational check, and any defective (or well worn) parts will be replaced. Air hoses on grapples will be checked. Crane cables will be routinely inspected. All necessary maintenance will be performed to preclude outage extension due to equipment failure.

9.1.4.2.10.2.2 Reactor Shutdown

The reactor is shut down according to a prescribed planned procedure. During cooldown, the reactor pressure vessel is vented and filled to above flange level to promote cooling.

9.1.4.2.10.2.2.1 Drywell Head Removal

Immediately after cooldown, the work to remove the drywell head can begin. The drywell head will be attached by a quick disconnect mechanism. To remove the head, the quick disconnect pins are withdrawn and stored separately for reinsertion when the head is replaced. The drywell head is lifted by the R/B crane to its storage space on the refueling floor. The drywell seal surface protector is installed before any other activity proceeds in the reactor well area.

9.1.4.2.10.2.2.2 Reactor Well Servicing

When the drywell head has been removed, several pipe lines are exposed. These lines penetrate the reactor well through openings. The piping must be removed and the openings sealed. There are also various vent openings which must be made watertight.

Water level in the vessel is now lowered to flange level in preparation for head removal.

9.1.4.2.10.2.3 Reactor Vessel Opening

9.1.4.2.10.2.3.1 Vessel Head Removal

~~*The combination head strongback and*~~ RPV Head Stud Tensioner System with RPV Head Strongback ~~*carousel stud tensioner*~~ *is transported by the R/B crane and positioned on the reactor vessel head.* The four lug pins are engaged into the RPV head lugs and the programmable control station is connected.

Each stud is tensioned and its nut loosened in a series of two to three passes. Finally, when the nuts are loose, they are backed off ~~*using a nut runner until only a few threads engage*~~ and removed along with the washer using the four nut and washer transfer tools. ~~*The suspended nut is hand rotated free from the stud, and the nuts and washers are placed in the racks provided for them on the carousel.*~~ The nuts and washers are placed in their respective holders on the nut rack. *When all the nuts and washers are removed, the vessel stud protectors and vessel head guide caps are installed.*

Next, the head~~*, strongback*~~ and RPV Head Stud Tensioner System with RPV Head Strongback ~~*and carousel*~~ *are transported by the R/B crane to the head holding pedestals on the refueling floor. The head holding pedestals keep the vessel head elevated to facilitate inspection and O-ring replacement.*

~~*The studs in line with the fuel transfer gates are removed from the vessel and placed in the rack provided for them. The loaded rack is transported to the refueling floor for storage. Removal of these studs provides a path for fuel movement.*~~

9.1.4.2.10.2.3.2 Dryer Removal

The dryer-separator strongback is lowered by the R/B crane and attached to the dryer lifting lugs. The dryer is lifted from the reactor vessel and transported underwater to its storage location in the D/S pit adjacent to the reactor well.

9.1.4.2.10.2.3.3 Separator Removal

In preparation for the separator removal, the steamline plugs are installed in the four main steam nozzles. The separator is then unbolted from the shroud using shroud head bolt wrenches. When the unbolting is accomplished, the dryer separator strongback is lowered into the vessel and attached to the separator lifting lugs. The separator is lifted from the reactor vessel and transported underwater to the storage location in the D/S pit adjacent to the reactor well.

9.1.4.2.10.2.3.4 Fuel Assembly Sampling

~~*During reactor operation, the core offgas radiation level is monitored. If a rise in offgas activity has been noted, the reactor core may be sampled during shutdown to locate any leaking fuel assemblies. The fuel sample isolates up to a four bundle array in the core. This stops water circulation through the bundles and allows fission products to concentrate if a bundle is defective. After 10 minutes, a water sample is taken for fission product analysis. If a defective bundle is found, it is transferred to the spent fuel pool and stored in a special defective fuel storage container to minimize background activity in the spent fuel pool.*~~

During reactor operation, the core offgas radiation level is monitored. If a rise in offgas activity has been noted, the reactor core may be sampled during shutdown to locate any leaking fuel assemblies. The sipping tube is attached on the refueling machine grapple, water inside the fuel channel is sipped and the fission product gas leakage is sensed by the detector. If a defective bundle is found, it is transferred to the spent fuel pool and stored in a special defective fuel storage container to minimize background activity in the spent fuel pool.

9.1.4.2.10.2.4 Refueling and Reactor Servicing

The gate isolating the spent fuel pool from the reactor well is removed, thereby interconnecting the pool areas. The refueling of the reactor can now begin.

9.1.4.2.10.2.4.1 Refueling

During a normal outage, approximately 25% of the fuel is removed from the reactor vessel. Most ~~*25%*~~ *of the* remaining *fuel is shuffled in the core (generally from peripheral to center locations) and 25% new fuel is installed. The actual fuel handling is done with the refueling* ~~*platform*~~ machine*. It is used as the principal means of transporting fuel assemblies between the reactor well and the spent fuel pool; it also serves as a hoist and transport device. The machine travels on a track extending along each side of the reactor well and spent fuel pool and supports the trolley, refueling grapple, and auxiliary hoists. The grapple is suspended from a trolley that can traverse the width of the platform.*

The refueling machine has two auxiliary hoists of 4.71 kN and ~~*9.81*~~ 14.71 *kN capacity.* ~~*One*~~ The larger capacity *hoist normally* ~~*can be*~~ is *used with appropriate grapples to handle control rods,* ~~*guide tubes*~~*,* with *fuel support pieces,* ~~*sources and other internals of the core*~~ and RIP components*. The* smaller *auxiliary hoist* ~~*can also*~~ ~~*serve*~~ serves *as*

a means of handling other equipment within the pool. ~~A second auxiliary hoist is mounted on the platform trolley.~~

The machine control system permits variable-speed, simultaneous operation of all three platform motions. Maximum speeds are:

(1)	*Bridge*	*20 m/min*
(2)	*Trolley*	*10 m/min*
(3)	*Grapple hoist*	*~~12~~ 15.2 m/min*

In the remote refueling machine control room, a single operator can control all the motions ~~of~~ to locate the platform ~~required to handle the fuel assemblies during refueling~~. Interlocks on both the grapple hoist and auxiliary hoist prevent hoisting of a fuel assembly over the core with a control rod withdrawn; interlocks also prevent withdrawal of a blade with a fuel assembly over the core attached to either the fuel grapple or auxiliary hoists. Interlocks block travel over the reactor in the startup mode.

The refueling machine contains a system that indicates the position of the fuel grapple over the core. The readout, in the local control room, matches the core arrangement cell identification numbers. The position indicator is accurate within 5 mm, relative to actual position, and minimizes jogging required to correctly place the grapple over the core.

To move fuel, the fuel grapple is aligned over the fuel assembly, lowered and attached to the fuel bundle bail. The fuel bundle is raised out of the core, moved through the refueling slot to the spent fuel pool, positioned over the storage rack and lowered into the rack. Fuel is shuffled and new fuel is moved from the spent fuel pool to the reactor vessel in the same manner.

9.1.4.2.10.2.5 Vessel Closure

The following typical procedural steps, when performed, will return the reactor to operating condition. The procedures are the reverse of those described in the preceding sections. Many steps are performed in parallel and not as listed.

(1) ***Core Verification—****the core position of each fuel assembly must be verified to assure that the desired core configuration has been attained. Underwater TV with a video tape is utilized. Cable optional.*

(2) ***FMCRD Tests—****the control rod drive timing, friction and scram tests are performed as required.*

(3) Replace separator.

(4) Bolt separator ~~and remove four steamline plugs~~.

(5) Replace steam dryer.

(6) Install gates.

(7) Drain reactor well.

(8) Remove drywell seal surface covering; open drywell vents.

(9) ~~Replace vessel studs.~~Install reactor vessel head

(10) Install vessel head piping and insulation.

(11) Hydro test vessel if required.

(12) Install drywell head; leak check.

(13) Install shield plugs.

(14) Stow gates.

*(15) **Startup Tests—**the reactor is returned to full power operation. Power is increased gradually in a series of steps until the reactor is operating at rated power. At specific steps during the approach to power, the incore flux monitors are calibrated.*

9.1.4.2.10.3 Departure of Fuel From Site

The empty cask arrives at the plant on a special flatbed railcar or truck. The personnel shipping barrier and transfer impact structure are removed from the large casks and stored outside the rail entry door. Health physics personnel check the cask exterior to determine if decontamination is necessary. Decontamination, if required, and washdown to remove road dirt, is performed before removal of the cask from the transport vehicle. The R/B equipment entry airlock door is opened and the cask with its transport device moved into the building. The rail car or truck is blocked in position.

The airlock door is closed and the cask is inspected for shipping damage.

The cask cooling system of the transport vehicle is disconnected. The cask yoke is removed from its storage position on the flatbed and attached to the cask trunnions. The yoke engagement, car brakes and wheel blocks and clearances for cask tilt and lift are checked. The cask is tilted to the vertical position with combined main hoist lift and trolley movement. With the cask in a vertical position, the cask is lifted approximately 1.5m off the transport device skid mounting trunnions to clear the upper coolant duct. The cask is moved up to the refueling floor and then into the cask washdown ~~pit~~ area and slowly lowered to the floor ~~of the pit~~. Closure head lifting cables on the yoke are attached to the head and secured and the closure nuts are disengaged. The cask is next raised and transferred into the cask pit.

The cask is moved to a position over the center of the cask pit and slowly lowered into the cask pit until it rests on the cask pit floor.

The cask lifting yoke is lowered until disengaged from the cask trunnions and the closure head lifted off the cask. The closure head and yoke are moved into the cask washdown ~~pit~~ area for storage. The cask pit is filled with water, and the ~~The~~ canal gates between the cask pit and the spent fuel pool are removed and spent fuel transfer from the storage racks to the cask is started.

Spent fuel is transferred underwater from storage in the spent fuel pool to the cask using the telescoping fuel grapple mounted on the refueling ~~platform~~ machine. When the cask is filled with spent fuel, the gate between the cask pit and the spent fuel pool is replaced. The closure head is replaced on the cask and the lift yoke engaged with the cask trunnions. The loaded cask is raised, transferred to the cask washdown ~~pit~~ area, and slowly lowered to the ~~pit~~ floor.

The cask is checked by health physics personnel and decontamination is performed in the cask washdown ~~pit~~ area with high pressure water sprays, chemicals and hand scrubbing as required to clean the cask to the level required for transport. Cooling connections are available in the cask washdown ~~pit~~ area in the event cooling is required during decontamination activities. The remaining closure nuts are replaced and tightened. Smear tests are performed to verify cleaning to ~~offsite transportation~~ applicable requirements.

The cleaned cask is lowered from the refueling floor to the R/B entry lock onto cask skids with the R/B crane and mounted on the transport vehicle. The cask cooling system of the transport vehicle is connected to the cask and the cask internal pressure and temperature are monitored. When they are at equilibrium conditions, the cask is ready for shipment. The personnel barrier and impact structure are replaced. The R/B airlock facility doors are opened and the cask and transport device are moved out of the R/B.

9.1.4.3 Safety Evaluation of Fuel-Handling System

Safety aspects (evaluation) of the fuel servicing equipment are discussed in Subsection 9.1.4.2.3, and safety aspects of the refueling equipment are discussed throughout Subsection 9.1.4.2.7. In addition, a summary safety evaluation of the fuel-handling system is provided below.

The fuel prep machine assists in the ~~removes~~ removal and ~~installs~~ installation of channels with all parts remaining underwater. Mechanical stops prevent the carriage from lifting the fuel bundle or assembly to height where water shielding is not sufficient. Irradiated channels, as well as small parts such as bolts and springs, are stored underwater. The spaces in the channel storage rack have center posts which prevent the loading of fuel bundles into this rack.

There are no nuclear safety problems associated with the handling of new-fuel bundles, singly or in pairs. Equipment and procedures prevent an accumulation of more than two bundles in any location.

The refueling machine is designed to prevent it from toppling into the pools during a SSE. Redundant safety interlocks, as well as limit switches, are provided to prevent

accidentally running the grapple into the pool walls. The grapple utilized for fuel movement is on the end of a telescoping mast. At full retraction of the mast, the grapple is sufficiently below water surface, so there is no chance of raising a fuel assembly to the point where it is inadequately shielded by water. The grapple is hoisted by redundant cables inside the mast, and is lowered by gravity. A digital readout is displayed to the operator, showing him the exact coordinates of the grapple over the core.

~~*The mast is suspended and gimbaled from the trolley, near its top, so that the mast can be swung about the axis of platform travel, in order to remove the grapple from the water for servicing and for storage.*~~

The grapple has two independent hooks~~, each operated by an air cylinder~~. Engagement is indicated to the operator. Interlocks prevent grapple disengagement until a "slack cable" signal from the lifting cables indicates that the fuel assembly is seated. The slack cable indication is also used to determine if a fuel bundle is lodged in a position other than its normal, seated position in the core.

In addition to the slack cable signal, the elevation of the grapple is continuously indicated. Also, after the grapple is disengaged, the position of the upper part of the fuel bundle can be observed using television.

In addition to the main hoist on the trolley, there are two auxiliary hoists on the trolley. These three hoists are precluded from operating simultaneously because control power is available to only one of them at a time.

The two auxiliary hoists have electrical interlocks which prevent the lifting of their loads higher than a specified limit. Adjustable mechanical jam-stops on the cables back up these interlocks.

The cask is moved by the R/B crane to the cask pit and gated off and the cask pit is *filled with water. Only then is the spent fuel pool connected to the cask pit and the fuel transfer begun. When the cask is loaded, the spent fuel pool is gated closed and the cask removal procedure reversed. A cask decontamination ~~pit~~* area *is provided.*

Light loads such as the ~~blade guide, fuel support casting, control rod~~ ~~or~~ control rod guide tube weigh considerably less than a fuel bundle and are administratively controlled to eliminate the movement of any light load over the spent fuel pool above the elevation required for fuel assembly handling. Thus, the kinetic energy of any light load would be less than a fuel bundle and would have less damage induced. Secondly, to satisfy NUREG-0554, the equipment handling heavy load *components over the spent fuel pool are designed to meet the single-failure-proof criteria.* The equipment layout in the fuel transfer pool and spent fuel pool is such that no heavy loads (e.g., the RIP diffuser with grapple) are transported over the spent fuel pool.

The spent fuel storage racks are purchased equipment. The purchase specification for these racks will require the vendor to provide the information requested in Question 430.192 pertaining to load drop analysis (see Subsection 9.1.6.4 for COL license information).

In summary, the fuel-handling system complies with General Design Criteria 2, 3, 4, 5, 61, and 63, and applicable portions of 10 CFR 50.

The safety evaluation of the new and spent fuel storage is presented in Subsections 9.1.1.3 and 9.1.2.3.

9.1.4.4 Inspection and Testing Requirements

9.1.4.4.1 Inspection

Refueling and servicing equipment is subject to the strict controls of quality assurance, incorporating the requirements of federal regulation 10 CFR 50 Appendix B. The fuel storage racks and refueling machine have an additional set of engineering specified "quality requirements" that identify features which require specific QA verification of compliance to drawing requirements.

For components classified as American Society of Mechanical Engineers (ASME) Section III, the shop operation must secure and maintain an ASME "N" stamp, which requires the submittal of an acceptable ASME quality plan and a corresponding procedural manual.

Additionally, the shop operation must submit to frequent ASME audits and component inspections by resident state code inspectors. Prior to shipment, every component inspection item is reviewed by QA supervisory personnel and combined into a summary product quality checklist (PQL). By issuance of the PQL, verification is made that all quality requirements have been confirmed and are on record in the product's historical file.

9.1.4.4.2 Testing

Qualification testing is performed on refueling and servicing equipment prior to multi-unit production. Test specifications are defined by the responsible design engineer and may include a sequence of operations, load capacity and life cycles tests. These test activities are performed by an independent test engineering group and, in many cases, a full design review of the product is conducted before and after the qualification testing cycle. Any design changes affecting function, that are made after the completion of qualification testing, are requalified by test or calculation.

Functional tests are performed in the shop prior to the shipment of production units and generally include electrical tests, leak tests, and sequence of operations tests.

When the unit is received at the site, it is inspected to ensure no damage has occurred during transit or storage. Prior to use and at periodic intervals, each piece of equipment is again tested to ensure the electrical and/or mechanical functions are operational.

Passive units, such as the fuel storage racks, are visually inspected prior to use.

Fuel-handling and vessel servicing equipment preoperational tests are described in Subsection 14.2.12.

Specific details of the Light Load Fuel Handling equipment are vendor specific. The following Light Load Fuel Handling System information will be developed and implemented after equipment procurement and prior to use:

(1) Light load fuel handling equipment operation and maintenance procedures.

(2) Fuel Handling procedures.

(3) Light load fuel handling equipment inspection and test plans, NDE, visual, etc.

(4) QA program to monitor and assure implementation and compliance of fuel handling operations and controls.

(5) Operator qualifications, training and control program.

These procedures and programs will be available for review prior to Receipt of Fuel.

9.1.4.5 Instrumentation Requirements

9.1.4.5.1 Refueling Machine

The refueling machine has a X-Y-Z position indicator system that informs the operator which core fuel cell the fuel grapple is accessing. Interlocks and a control room monitor are provided to prevent the fuel grapple from operating in a fuel cell where the control rod is not in the proper orientation for refueling.

Additionally, there is a series of mechanically activated switches and relays that provides monitor indications on the operator's console for grapple limits, hoist and cable load conditions, and confirmation that the grapple's hook is either engaged or released.

A series of load cells is installed to provide automatic shutdown whenever threshold limits are exceeded for either the fuel grapple or the auxiliary hoist units.

9.1.4.5.2 ~~Dual Control Blade~~Control Rod and Fuel Support Grapple

Although the control ~~blade~~rod and *fuel support grapple* is *not essential to safety, it has an instrumentation system consisting of mechanical switches and indicator lights. This system provides the operator with a positive indication that the grapple is properly aligned and oriented and that the grappling mechanism is either extended or retracted.*

9.1.4.5.3 Other

Refer to Table 9.1-5 for additional refueling and servicing equipment not requiring instrumentation.

9.1.4.5.4 Radiation Monitoring

The fuel area ventilation exhaust radiation monitoring is discussed in Subsection 11.5.2.1.3.

9.1.5 Overhead Heavy Load Handling Systems (OHLH)

9.1.5.1 Design Bases

The equipment covered by this subsection concerns items considered as heavy loads that are handled under conditions that mandate critical handling compliance.

Critical load handling conditions include loads, equipment, and operations which, if inadvertent operations or equipment malfunctions either separately or in combination, could cause:

(1) A release of radioactivity.

(2) A criticality accident.

(3) The inability to cool fuel within reactor vessel or spent fuel pool.

(4) Prevent safe shutdown of the reactor. This includes risk assessments to spent fuel and storage pool water levels, cooling of fuel pool water, new fuel criticality. This includes all components and equipment used in moving any load weighing more than one fuel assembly, including the weight of its associated handling devices (i.e. 4.45 kN).

The R/B crane as designed shall provide a safe and effective means for transporting heavy loads, including the handling of new and spent fuel, plant equipment and service tools. Safe handling includes design considerations for maintaining occupational radiation exposure as low as practicable during transportation and handling.

Where applicable, the appropriate seismic category, safety class quality ~~group~~ requirements*, ASME, ANSI, industrial and electrical codes have been identified (Tables 3.2-1 and 9.1-6). The designs will conform to the relevant requirements of General Design Criteria 2, 4 and 61 of 10 CFR 50 Appendix A.*

The lifting capacity of each crane or hoist is designed to at least the maximum actual or anticipated weight of equipment and handling devices in a given area serviced. The hoists, cranes, or other special *lifting devices* for handling heavy loads *shall comply with the requirements of ANSI N14.6, ANSI B30.9, ANSI B30.10 and NUREG-0612, Subsection 5.1.1(4) or 5.1.1(5). Cranes and hoists are also designed to criteria and guidelines of NUREG-0612, Subsection 5.1.1(7), ANSI B30.2 and CMAA-70 specifications for electrical overhead traveling cranes, including ANSI B30.11, ANSI B30.16, ~~and~~ NUREG-0554*, and ASME NOG-1 *as applicable.*

9.1.5.2 System Description

9.1.5.2.1 Reactor Building Crane

The Reactor Building (R/B) is a reinforced concrete structure which encloses the reinforced concrete containment vessel, the refueling floor, new-fuel storage vault, the storage pools for spent-fuel and the dryer and separator and other equipment. The R/B crane provides heavy load lifting capability for the refueling floor. The main hook 1.471

*MN will be used to lift the concrete shield blocks, drywell head, reactor pressure vessel (RPV) head insulation, RPV head, dryer, separator strongback, ~~RPV head strongback carousel~~*RPV Head Stud Tensioner System with RPV Head Strongback*, new-fuel shipping containers, and spent-fuel shipping cask. The orderly placement and movement paths of these components by the R/B crane precludes transport of these heavy loads over the spent fuel storage pool or over the new-fuel storage vault.*

The R/B crane will be used during refueling/servicing as well as when the plant is online. During refueling/servicing, the crane handles the shield plugs, drywell and reactor vessel heads, steam dryer and separators, etc. (Table 9.1-7). Minimum crane coverage includes R/B refueling floor laydown areas, and R/B equipment storage pit. During normal plant operation, the crane will be used to handle new-fuel shipping containers and the spent-fuel shipping casks. Minimum crane coverage must include the new-fuel vault, the R/B equipment hatches, and the spent-fuel cask loading pit *and washdown ~~pits~~* area*. A description of the refueling procedure can be found in Section 9.1.4.*

The R/B crane will be interlocked to prevent movement of heavy loads over the spent-fuel storage portion of the spent-fuel storage pool. Since the crane is used for handling large heavy objects over the open reactor, the crane is of Type I design in accordance with ASME NOG-1*. The R/B crane shall be designed to meet the single-failure-proof requirements of NUREG-0554 and* ASME NOG-1*.*

9.1.5.2.2 Other Overhead Load Handling System

9.1.5.2.2.1 Upper Drywell Servicing Equipment

The upper drywell arrangement provides servicing access for the main steam isolation valves (MSIVs), feedwater isolation valves, safety/relief valves (SRVs), emergency core cooling systems (ECCS) isolation valves, and drywell cooling coils, fans and motors. Access to the space is via the R/B through either the upper drywell personnel lock or equipment hatch. All equipment is removed through the upper drywell equipment hatch. Platforms are provided for servicing the feedwater and MSIVs, SRVs, and drywell cooling equipment with the object of reducing maintenance time and operator exposure. The MSIVs, SRVs, and feedwater isolation valves all weigh in excess of 4.45 kN. Thus, they are considered heavy loads.

With maintenance activity only being performed during a refueling outage, only safe shutdown ECCS piping and valves need be protected from any inadvertent load drops. Since only one division of ECCS is required to maintain the safe shutdown condition and the ECCS divisions are spatially separated, an inadvertent load drop that breaks more than one division of ECCS is not credible. In addition, two levels of piping support structures and equipment platforms separate and shield the ECCS piping from heavy loads transport path.

This protection is adequate such that no credible load drop can cause either:

(1) A release of radioactivity.

(2) A criticality accident.

(3) The inability to cool fuel within reactor vessel or spent fuel pool.

9.1.5.2.2.2 Lower Drywell Servicing Equipment

The lower drywell (L/D) arrangement provides for servicing, handling and transportation operations for the RIP and FMCRD components*. The lower drywell OHLHS consists of ~~a~~* an *~~rotating equipment service~~* undervessel rotating *platform, chain hoists, FMCRD ~~removal machine~~* handling device*, ~~a~~ RIP* motor *removal ~~machine~~* equipment*, and other special purpose tools.*

The undervessel *rotating ~~equipment~~ platform provides a work surface under the reactor vessel to support the weight of personnel, tools, and equipment and to facilitate transportation moves and heavy load handling operations. The platform rotates ~~360~~ 180° in either direction from its stored or "idle" position. The platform is designed to accommodate the maximum weight of the accumulation of tools and equipment plus a maximum sized crew. Weights of tools and equipment are specified in the interface control drawings for the equipment used in the lower drywell. Special hoists are provided in the lower drywell and reactor building to facilitate handling of these loads.*

(1) Reactor Internal Pump Servicing

There are 10 RIPs and their supporting instrumentation and heat exchangers in the L/D that require servicing. The facilities provided for servicing the RIPs include:

(a) ~~L/D equipment~~ Undervessel rotating *platform* has a RIP motor elevator and guide screws to raise and lower the RIP motor. *~~with facilities to~~* Facilities also *rotate the* RIP *motor from vertical to horizontal and ~~place it on a cart~~* use a RIP motor cart and RIP motor container *for direct pull out to the R/B. The ~~equipment~~ platform rotates to facilitate alignment with the installed pump locations.*

(b) Attachment points for rigging the RIP heat exchanger into place. The RIP heat exchanger can be lowered straight down to the equipment platform.

(c) Access to the RIP equipment platform is via stairs. There is a ladder access to the RIP heat exchanger maintenance platform.

(d) The L/D equipment tunnel and hatch are utilized to remove the RIP motors from the lower drywell.

(e) The RIP motor servicing area is directly outside the L/D equipment hatch.

The 10 RIPs have wet induction motors in housings which protrude into the lower drywell from the RPV bottom head. These are in a circle at a radius of 3162.5 mm from the RPV centerline. For service, the motor is removed from

below and outside, whereas the diffuser, impeller and shaft are removed from above and inside the RPV.

*The motor, with its lower flange attached, weighs approximately ~~32.36~~*32.41 *kN, is 830 mm in diameter and ~~1925~~*1975 *mm high. The flange has "ears" that extend from two sides, 180° apart. These ears, which are used to handle the motor, increase the flange diameter to 1200 mm for a width of 270 mm.*

The motor, suspended from ~~jack~~ guide *screws, is lowered straight down out of its housing onto the ~~equipment~~* RIP motor elevator on the rotating *platform*. A motor container is then installed. *The motor is then moved, circumferentially and lifted onto a rail-mounted transport cart for direct removal through the equipment removal L/D equipment tunnel and hatch. The motor is transported horizontally out of the containment and into the motor service shop immediately adjacent to the L/D equipment hatch.*

The RIP servicing equipment includes the cart to transport the motor and its container *from the service area through the equipment hatch to the L/D ~~equipment~~* rotating *platform. The interface for this equipment is the rails on the ~~equipment~~* rotating *platform that permit locating the motor below its nozzle on the RPV. The servicing equipment includes a chain hoist for rotating the RIP motor from horizontal to vertical and a ~~hydraulic lift to raise it~~* RIP motor elevator that uses guide screws to raise the RIP motor *from the ~~equipment~~* rotating *platform to its installed position below the RPV. Facilities are provided for handling stud tensioners, blind flanges, other tools, drains and vents used in RIP servicing.*

Servicing of the RIP heat exchanger, such as removal of the tube bundle, will be accomplished by rigging to attachment points on the RPV pedestal and structural steel in the area. A direct vertical removal path is provided from the heat exchanger installed position to the equipment platform. The operation is performed by a chain hoist. This is considered to be a nonroutine servicing operation.

These RIPs are serviced only when the reactor is in a safe shutdown mode. In addition, there is no safety-related equipment below either the RIPs or the RIP heat exchangers. Inadvertent load drops of either component cannot cause either (1) a release of radioactivity, (2) a criticality accident, or (3)the inability to cool fuel within reactor vessel or spent fuel pool.

(2) Fine Motion Control Rod Drive

There are 205 FMCRDs in the L/D that require servicing. There are two types of servicing operations: (1) replacement of the FMCRD drive mechanism and (2) motor and seal replacement. Separate servicing equipment is provided for each of these operations.

(a) The FMCRD ~~servicing machine~~ handling equipment *has its own mechanisms for rotating and raising* from horizontal to vertical *FMCRD assemblies from a carrier on the equipment platform to their installed position. This ~~servicing machine~~* handling equipment *interfaces with the ~~L/D equipment~~* undervessel rotating *platform, which permits positioning the ~~servicing machine~~* handling equipment *under any of the 205 FMCRDs.*

(b) ~~A separate machine~~ Specialized devices *and cart are provided for ~~servicing~~* removal and installation of *FMCRD motors and seal assemblies and transporting them to the service shop located immediately outside the L/D equipment hatch.*

There is no safety-related equipment below either component. Inadvertent load drops by the FMCRD servicing equipment cannot cause either (1) a release of radioactivity, (2) a criticality accident, or (3) the inability to cool fuel within the reactor vessel or spent fuel pool.

9.1.5.2.2.3 Main Steam Tunnel Servicing Equipment

The main steam tunnel is a reinforced concrete structure that surrounds the main steamlines and feedwater lines. The safety-related valve area of the main steam tunnel is located inside the Reactor Building. Access to the main steam tunnel is during a refueling/servicing outage. At this time, MSIVs or feedwater isolation valves and/or feedwater check valves may be removed using permanent overhead monorail type hoists. They are transported by monorail out of the steam tunnel and placed on the floor below a ceiling removal hatch. Valves are then lifted through the ceiling hatch by valve service shop monorail. During shutdown, all of the piping and valves are not required to operate. Any load drop can only damage the other valves or piping within the main steam tunnel. Inadvertent load drops by the main steam tunnel servicing equipment cannot cause either:

(1) A release of radioactivity.

(2) A criticality accident.

(3) The inability to cool fuel within reactor vessel or spent fuel pool.

9.1.5.2.2.4 Other Servicing Equipment

In the Reactor Building and Control Building (except within the containment, within the main steam tunnel and on the refueling floor), no safety-related components of one division shall be routed over any portion of a safety-related portion of another division. A load drop accident in one division causing the complete loss of a second division is not credible. Hence, inadvertent load drops cannot cause either (1) a release of radioactivity, (2) a criticality accident, (3) the inability to cool fuel within reactor vessel or spent fuel pool, or (4) prevent the safe shutdown of the reactor. Therefore, all servicing equipment located outside the containment, the main steam tunnel, or the refueling floor are not subject to the requirements of Subsection 9.1.5.

9.1.5.3 Applicable Design Criteria For All OHLH Equipment

All handling equipment subject to heavy loads handling criteria will have ratings consistent with lifts required and the design loading will be visibly marked. Cranes/hoists or monorail hoists will pass over the centers of gravity of heavy equipment that is to be lifted. In locations where a single monorail or crane handles several pieces of equipment, the routing shall be such that each transported piece will pass clear of other parts. If, however, due to restricted overhead space the transported load cannot clear the installed equipment, then the monorail may be offset to provide transport clearance. A lifting eye offset in the ceiling over each piece of equipment can be used to provide a Y-lift so that the load can be lifted upward until free and then swung to position under the monorail for transport.

Pendant control is required for the bridge, trolley and auxiliary hoist to provide efficient handling of fuel shipping containers during receipt and also to handle fuel during new-fuel inspection. The crane control system will be selected considering the long lift required through the equipment hatch as well as the precise positioning requirements when handling the RPV and drywell heads, RPV internals, and the RPV head stud tensioner assembly. The control system will provide stepless regulated variable speed capability with high empty-hook speeds. Efficient handlings of the drywell and RPV heads and stud tensioner assembly require that the control system provide spotting control. Since fuel shipping cask handling involves a long duration lift, low speed and spotting control, thermal protection features will be incorporated.

Heavy load equipment is also used to handle light loads and related fuel handling tasks. Therefore, much of the handling systems and related design, descriptions, operations, and service task information of Subsection 9.1.4 is applicable here. The cross reference between the handling operations/equipment and Subsection 9.1.4 is provided in Table 9.1-7. See Table 9.1-8 for a summary of heavy load operation.

Transportation routing drawings will be made covering the transportation route of every piece of heavy load removable equipment from its installed location to the appropriate service shop or building exit. Routes will be arranged to prevent congestion and to assure safety while permitting a free flow of equipment being serviced. The frequency of transportation and usage of route will be documented based on the predicted number of times usage either per year and/or per refueling or service outage.

Safe load paths/routing will comply with the requirements of NUREG-0612, Subsection 5.1.1(1).

9.1.5.4 Equipment Operating Procedures Maintenance and Service

Each item of equipment requiring servicing will be described on an interface control diagram (ICD), delineating the space around the equipment required for servicing. This will include pull space for internal parts, access for tools, handling equipment, and alignment requirements. The ICD will specify the weights of large removable parts, show the location of their centers of gravity, and describe installed lifting accommodations such as eyes and trunnions. An instruction manual will describe maintenance procedures for each piece of equipment to be handled for servicing. Each

manual will contain suggestions for rigging and lifting of heavy parts and identify any special lifting or handling tools required.

All major handling equipment components (e.g., cranes, hoist, etc.) will be provided with an operating instruction and maintenance manual for reference and utilization by operations personnel. The handling equipment operating procedure will comply with the requirements of NUREG-0612, Subsection 5.1.1(2).

9.1.5.5 Safety Evaluations

The cranes, hoists, and related lifting devices used for handling heavy loads either satisfy the single-failure guidelines of NUREG-0612, Subsection 5.1.6, including NUREG-0554 or evaluations are made to demonstrate compliance with the recommended guidelines of Section 5.1, including Subsections 5.1.4 and 5.1.5.

The ~~equipment handling components~~ ~~12.33~~14.71 kN hoist on the refueling machine for handling RIP components *~~over the fuel pool are~~* is *designed to meet the single-failure-proof criteria ~~to satisfy~~* of *NUREG-0554. Redundant safety interlocks and limit switches are provided to prevent transporting heavy loads other than spent fuel by the refueling ~~bridge crane~~* machine *over any spent fuel that is stored in the spent-fuel storage pool.*

A transportation routing study will be made of all planned heavy load handling moves to evaluate and minimize safety risks.

Safety evaluations of related light loads and refueling handling tasks in which heavy load equipment is also used are covered in Subsection 9.1.4.3.

The CRD and RIP maintenance equipment on the rotating bridge below the RPV used during refueling operation will be withdrawn through the personnel equipment tunnel to outside primary containment.

9.1.5.6 Inspection and Testing

Heavy load handling equipment is subject to the strict controls of Quality Assurance (QA), incorporating the requirements of 10 CFR 50 Appendix B. Components defined as essential to safety have an additional set of engineering specified "Quality Requirements" that identify safety-related features which require specific QA verification of compliance to drawing/specification requirements.

Prior to shipment, every lifting equipment component requiring inspection will be reviewed by QA for compliance and that the required records are available. Qualification load and performance testing, including nondestructive examination (NDE) and dimensional inspection on heavy load handling equipment, will be performed prior to QA acceptance. Tests may include load capacity, safety overloads, life cycle, sequence of operations and functional areas.

When equipment is received at the site, it will be inspected to ensure that no damage has occurred during transit or storage. Prior to use and at periodic intervals, each piece of equipment will be tested again to ensure that the electrical and/or mechanical functions are operational, including visual and, if required, NDE inspection.

Crane inspections and testing will comply with the requirements of ANSI B30.2 and NUREG-0612, Subsection 5.1.1(6).

9.1.5.7 Instrumentation Requirements

The majority of the heavy load handling equipment is manually operated and controlled by the operator's visual observations. This type of operation does not necessitate the need for a dynamic instrumentation system.

Load cells may be installed to provide automatic shutdown whenever threshold limits are exceeded for critical load handling operations to prevent overloading.

9.1.5.8 Operational Responsibilities

Critical heavy load handling in operation of the plant shall include the following documented program for safe administration and safe implementation of operations and control of heavy load handling systems:

(1) Heavy Load Handling System and Equipment Operating Procedures

(2) Heavy Load Handling Equipment Maintenance Procedures and/or Manuals

(3) Heavy Load Handling Equipment Inspection and Test Plans; NDE, Visual, etc.

(4) Heavy Load Handling Safe Load Paths and Routing Plans

(5) QA Program to Monitor and Assure Implementation and Compliance of Heavy Load Handling Operations and Controls

(6) Operator Qualifications, Training and Control Program

See Subsection 9.1.6.6 for COL license information.

9.1.6 COL License Information

9.1.6.1 New Fuel Storage Racks Criticality Analysis

The following standard supplement addresses COL License Information Item 9.1.

The COL applicant shall provide the NRC a confirmatory criticality analysis for the inadvertent placement of a fuel assembly in other that prescribed locations as required by Subsection 9.1.1.1.1. A confirmatory criticality analysis will be prepared and verified in accordance with ITAAC 2.5.6.1, 2.5.6.2 and 2.5.6.3.

The analysis will document:

(1) Assumptions and input parameters (i.e. number of racks, fuel capacity, rack material, neutron poison content, fuel center to center distances). Assumptions include highest reactivity fuel and optimum moderators under normal and accident conditions.

(2) The highest reactivity fuel storage array is maintained subcritical ($k_{eff} \leq 0.95$) when fully loaded under varying moderator conditions up to optimum (dry to flooded with fire extinguishing aerosols or non-borated water).

(3) Rack design precludes inadvertent placement of fuel in other than design locations.

(4) Failure of non-safety related structures in vicinity of new fuel storage or fuel load drop will not increase $k_{eff} > 0.95$.

(5) Maximum uplift forces from fuel handling equipment will not increase $k_{eff} > 0.95$ for fuel array.

9.1.6.2 Dynamic and Impact Analyses of New Fuel Storage Racks

The following standard supplement addresses COL License Information Item 9.2.

The COL applicant shall provide the NRC confirmatory dynamic and impact analyses of the new fuel storage racks, as requested by Subsection 9.1.1.1.6. These analyses are dependent on a vendor specific design and the as-built configuration of new fuel storage racks. A description of the dynamic and Impact (load drop) confirmatory analyses will be provided in an FSAR amendment in accordance with 10 CFR 50.71(e) prior to receipt of fuel. (COM 9.1-1)

Structural integrity of the racks will be demonstrated for the load combinations described in SRP 3.8.4 appendix D.

The dynamic analysis will utilize the input excitation provided in Section 3A.10.2 for a SSE. The fuel storage vault and racks meet Seismic Category 1 requirements.

The impact analysis will confirm that $k_{eff} \leq 0.95$ for a load drop of one fuel assembly and its associated handling tool from a height of 1.8 m above the new fuel racks.

9.1.6.3 Spent Fuel Storage Racks Criticality Analysis

The following standard supplement addresses COL License Information Item 9.3.

The COL applicant shall provide the NRC a confirmatory critically analysis for the inadvertent placement of a fuel assembly in other than prescribed locations, as required by Subsection 9.1.2.3.1. A confirmatory criticality analysis for spent fuel storage will be prepared and verified in accordance with ITAAC 2.5.6.1, 2.5.6.2 and 2.5.6.3.

The analysis will document:

(1) Assumptions and input parameters (i.e. number of racks, fuel capacity, rack material, neutron poison content, fuel center to center distances). Assumptions include highest reactivity fuel assembly (based on minimum burnup) and optimum moderator under normal and accident conditions.

(2) The highest reactivity fuel storage array is maintained subcritical ($k_{eff} \leq 0.95$) when fully loaded under optimum moderator condition (non-borated water).

(3) Maximum uplift forces from fuel handling equipment will not increase $k_{eff} > 0.95$ for fuel array

(4) Failure of non-safety related structures in vicinity of spent fuel storage, fuel load drop or missiles generated by surrounding equipment will not increase $k_{eff} > 0.95$

(5) Rack design precludes inadvertent placement of fuel in other than design locations

9.1.6.4 Spent Fuel Racks Load Drop Analysis

The following standard supplement addresses COL License Information Item 9.4.

The COL applicant shall provide the NRC a confirmatory load drop analysis, as required by Subsection 9.1.4.3. This analysis is dependent on a vendor specific design and the as-built configuration of spent-fuel storage racks. A description of the confirmatory load drop analysis for the spent fuel storage racks will be provided in an FSAR amendment in accordance with 10 CFR 50.71(e) prior to receipt of fuel. (COM 9.1-2)

The load drop analysis will confirm that $k_{eff} \leq 0.95$ for a drop of one fuel assembly and its associated handling tool from a height of 1.8 m above the spent fuel racks.

9.1.6.5 New Fuel Inspection Stand Seismic Capability

The following standard supplement addresses COL License Information Item 9.5.

The COL applicant shall install the new fuel inspection stand firmly to the wall so that it does not fall into or dump personnel into the spent fuel pool during an SSE (Subsection 9.1.4.2.3.2). The risk of dumping personnel or the fuel inspection stand into the spent fuel pool during an SSE has been addressed by a modified stand design. The improved stand design elevates fuel bundles rather than personnel and is anchored in a refueling floor pit such that it cannot fall into the fuel pool during an SSE.

9.1.6.6 Overhead Load Handling System Information

The following standard supplement addresses COL License Information Item 9.6.

The COL applicant shall provide a list of all cranes, hoists, and elevators and their lifting capacities, including any limit and safety devices required for automatic and manual operation.

In addition, for all such equipment, the COL applicant shall provide the following information:

(1) Heavy load handling system operating and equipment maintenance procedures.

(2) Heavy load handling system and equipment maintenance procedures and/or manuals.

(3) Heavy load handling system and equipment inspection and test plans; NDE, visual, etc.

(4) Heavy load handling safe load paths and routing plans.

(5) QA program to monitor and assure implementation and compliance of heavy load handling operations and controls.

(6) Operator qualifications, training and control program.

The information above is either vendor specific and will be established following equipment procurement, or involves associated programs that will be developed as the equipment is procured. Appropriate descriptions will be added with an FSAR amendment in accordance with 10 CFR 50.71(e) prior to receipt of fuel. (COM 9.1-3).

9.1.6.7 Spent Fuel Racks Structural Evaluation

The following standard supplement addresses COL License Information Item 9.7.

The COL applicant shall provide the NRC a confirmatory structural evaluation of the spent fuel racks, as outlined in Subsection 9.1.2.1.3. This evaluation is dependent on a vendor specific design and the as-built configuration of spent fuel storage racks. A description of the confirmatory structural evaluation will be provided in an FSAR amendment in accordance with 10 CFR 50.71(e) prior to receipt of fuel. (COM 9.1-4)

Structural integrity of the racks will be demonstrated for the load combinations described in SRP 3.8.4 appendix D. The fuel storage racks meet Seismic Category 1 requirements.

9.1.6.8 Spent Fuel Racks Thermal-Hydraulic Analysis

The following standard supplement addresses COL License Information Item 9.8.

The COL applicant shall provide the NRC confirmatory thermal-hydraulic analysis that evaluates the rate of naturally circulated flow and the maximum rack water exit temperatures, as required by Subsection 9.1.2.1.4. A confirmatory thermal-hydraulic analysis will be prepared and verified in accordance with ITAAC 2.5.6.4.

Fuel bundle data in the analysis will use maximum decay heat generation rates for worst case power history. Natural circulation flow through the rack arrangement prevents water temperatures from exceeding 100°C under normal, abnormal, and accident conditions.

9.1.6.9 Spent Fuel Firewater Makeup Procedures and Training

The following standard supplement addresses COL License Information Item 9.9.

The COL applicant shall develop detailed procedures and operator training for providing firewater makeup to the spent fuel pool (Subsection 9.1.3.3). Firewater makeup procedures and training will be in place and available onsite for inspection prior to fuel load. (COM 9.1-5).

9.1.6.10 Protection of RHR System Connections to FPC System

The following standard supplement addresses COL License Information Item 9.10.

The COL applicant shall assure that the RHR system connections are adequately protected from the effects of pipe whip, internal flooding, internally generated missiles, and the effects of a moderate energy pipe rupture in the vicinity (Subsection 9.1.3.3).

The NRC staff will be notified of the availability of the design analyses that assure the RHR system connections are adequetely protected from the effects of pipe whip, internal flooding, internally generated missiles, and the effects of a moderate energy pipe rupture in the vicinity, prior to installation of the RHR system or components. The necessary details of that information will be provided in the next COLA revision occurring beyond three months after completion of the analyses.

~~This~~The as-built analysis is dependent on plant walk-downs to identify as-built plant conditions in the vicinity of the RHR connections. A description of this analysis will be provided in an FSAR amendment in accordance with 10 CFR 50.71(e) prior to fuel load. (COM 9.1-6)

Flood protection for RHR system connections will be evaluated in accordance with SRP 3.4.1. Internal Missile probability will be shown by analysis to be less than 10^{-7} per year or approved methods of missile protection will be implemented in accordance with SRP 3.5.1.1.

RHR protection against moderate energy pipe failures will be analyzed in accordance with SRP 3.6.1.

Table additions and deletions for departures have been incorporated using regular font for clarity. Tables 9.1-9, 9.1-10, and 9.1-12 have no changes from ABWR DCD.

Table 9.1-1 Not Used

Table 9.1-2 Fuel Servicing Equipment

No.	Component Identification	Safety Classification *	Quality Requirements†	Seismic Category‡
1	Fuel Prep Machine	N	E	NA
2	New Fuel Inspection Stand	N	E	O
3	Channel Bolt Wrench	N	E	NA
4	Channel-Handling Tool	N	E	NA
5	General-Purpose Grapple	N	E	NA
6	Refueling Machine	N	E	I
7	Channel-Handling Boom	N	E	NA
8	Jib Crane	N	E	O

* N = Non-nuclear safety-related
2 = Safety Class

† E = Elements of 10 CFR 50 Appendix B are generally applied, commensurate with the importance of the requirement function.

‡ NA = No Seismic Requirements
O = Designed to hold its load in a SSE
I = Seismic Category I

Table 9.1-3 Reactor Vessel Servicing Equipment

No.	Essential Component Identification	Safety Classification*	Quality Requirements†	Seismic Category‡
1	Reactor Vessel Service Tools	N	E	NA
2	Steamline Plug	N	E	NA
3	Shroud Head Bolt Wrench	N	E	NA
4	Head Holding Pedestal	N	E	I
5	Head Stud Rack	N	E	NA
6	Dryer and Separator Strongback	N	E	NA[ƒ]
7	~~*RPV Head Strongback and Stud Tensioner System*~~RPV Head Stud Tensioner System with RPV Head Strongback	~~2/~~N	E	NA
8	RIP Impeller / Shaft Handling Device (Grapple)	N	E	NA
9	RIP Impeller Rack	N	E	NA
10	Fuel Assembly Sampler	N	E	NA

* N = Non-nuclear safety related
2 = Safety Class

† E = Elements of 10 CFR 50 Appendix B are generally applied, commensurate with the importance of the requirement function.

‡ NA = No Seismic Requirements
I = Seismic Category I

ƒ Dynamic analysis methods for seismic loading are not applicable, as this equipment is supported by the reactor service crane. Lifting devices have been designed with a minimum safety factor of 10 or utilize a dual load path with a factor of safety of 5:1 and undergo proof testing.

Table 9.1-4 Under-Reactor Vessel Servicing Equipment and Tools

No.	Equipment/Tool	Safety Class	Seismic Category
1	FMCRD Handling Equipment	N	NA
2	Undervessel Rotating Platform	N	NA
3	RIP Motor Servicing Equipment	N	NA

Notes:
NA=No Seismic Requirements
N =Non-nuclear safety-related

Table 9.1-5 Tools and Servicing Equipment

Fuel Servicing Equipment	**Refueling Equipment**
Channel Handling Boom Fuel Preparation Machines New Fuel Inspection Stand Channel Bolt Wrenches Channel Handling Tool General-Purpose Grapples	Refueling Machine
Servicing Aids	**Storage Equipment**
Pool Tool Accessories Actuating Poles General Area Underwater Lights Local Area Underwater Lights Drop Lights Underwater TV Monitoring System Underwater Vacuum Cleaner Viewing Aids Light Support Brackets Auxiliary Platform	Fuel Storage Racks Channel Storage Racks Defective Fuel Storage Containers ~~*In-Vessel Racks*~~ CR Guide Tube Storage Rack CR Storage Rack Equipment Storage Rack
Reactor Vessel Servicing Equipment	**Under-Reactor Vessel Servicing Equipment**
Reactor Vessel Servicing Tools Steamline Plugs and Installation Tools Shroud Head Bolt Wrenches Head Holding Pedestals Head Stud Rack Dryer-Separator Strongback ~~*RPV Head Strongback with Stud Tensioning System*~~ RPV Head Stud Tensioner System with RPV Head Strongback Fuel Assembly Sampler	Fine Motion Control Rod Drive Servicing Tools CRD Hydraulic System Tools FMCRD Handling Equipment Handling Platform Incore Monitoring Seal Flushing Equipment RIP Motor Handling Equipment RIP Motor and FMCRD Carts RIP and FMCRD Maintenance Equipment
In-Vessel Servicing Equipment	
Instrument Strongback Control Rod Grapple (Fuel Pool) Control Rod Guide Tube Grapple ~~*Dual Control Blade &*~~Control Rod and Fuel Support Grapple Grid Guide Instrument Handling Tool Control Rod Guide Tube Seal Incore Guide Tube Seals RIP Impeller/Shaft Handling Grapple RIP Diffuser/Stretch Tube Handling Attachment Blade Guides RIP Handling Tools	

Table 9.1-6 Reference Codes and Standards

Number	Title
ANS-N14.6	Standard for Special Lifting Devices for Shipping Containers Weighing (5 ton) or More for Nuclear Materials
ANSI B30.9	“Slings”
ANSI B30.10	“Hooks”
ANSI B30.2	Performance Standards for Overhead Electric Wire Rope Hoists
ANSI B30.16	Performance Standards for Air Wire Rope Hoists
ANSI B30.11	Overhead and Gantry Crane
ANSI 57.1	Design Requirements For Light Water Reactor Fuel Handling Systems
ANSI 57.2	Design Requirements For Light Water Reactor Spent Fuel Storage Facilities At Nuclear Power Plants
ANSI 57.3	Design Requirements For New Fuel Storage Facilities At Light Water Reactor Plants
ASME NOG-1	Rules For Construction Of Overhead And Gantry Cranes
CMAA70	Specifications for Electric Overhead Travelling Cranes
NUREG-0554	Single-Failure-Proof Cranes for Nuclear Power Plants
NUREG-0612	Control of Heavy Loads at Nuclear Power Plants
NUREG-0800	Standard Review Plan For Review Of Safety Analysis Reports For Nuclear Power Plants

Table 9.1-7 Heavy Load Equipment Used to Handle Light Loads and Related Refueling Handling Tasks

Handling Operations/Equipment	Applicable Light Load Handling Subsections
Overhead Bridge Cranes Reactor Building Crane	9.1.4.2.2 9.1.4.2.2
Fuel Servicing Equipment	9.1.4.2.3
Servicing Aids	9.1.4.2.4
Reactor Vessel Servicing Equipment Steamline Plug Head Stud Rack Dryer/Separator Strongback ~~*RPV Head Strongback and Stud Tensioning System*~~ RPV Head Stud Tensioner System with RPV Head Strongback	9.1.4.2.5
In-Vessel Servicing Equipment	9.1.4.2.6
Refueling Equipment Refueling Machine Storage Equipment Under-Reactor Vessel Servicing Equipment Fuel Handling Service Tasks Reactor Shutdown Handling Tasks Drywell Head Removal Reactor Well Servicing Reactor Vessel Head Removal Dryer Removal Separator Removal Refueling Vessel Closure	9.1.4.2.7 thru 9.1.4.2.10

Table 9.1-8 Heavy Load Operations

Hardware Handling Tasks	Handling Systems*	Handling Equipment	In-Plant Location Elevation
RPV Opening/Closing Operations:			
Drywell—Shield Blocks: Removal, storage and reinstallation	RBS	RB Crane Main Hoist	RB 26700 RF 26700
D/S Pool, Spent Fuel Pool, Fuel Cask Pit, Shield Plugs and Pool Seal Gates Removal, reinstallation and storage on the refueling floor on in the D/S Pool	RBS	RB Crane Main or Auxiliary Hoist, Slings and Strongbacks	RF 26700 D/S P 18700
Drywell Head Removal, storage and reinstallation	RBS	RB Crane Main Hoist Drywell Head Strongback	RF 26700 R/W 23700
Reactor Vessel Head Insulation Removal, storage and reinstallation	RBS	RB Crane Main Hoist Lifting Sling	RF 26700 R/W 18700
Reactor Vessel Head Removal, storage and reinstallation, includes handling stud tensioner studs, nuts, ~~*head strongback*~~RPV Head Stud Tensioner System with RPV Head Strongback	RBS	RB Crane Main Hoist Auxiliary Hoist ~~*Head Strongback/ Carousel*~~ RPV Head Stud Tensioner System with RPV Head Strongback RPV Head Support Pedestal	RF 26700 RW 18700
Steam Dryer Removal, storage and reinstallation	RBS	RB Crane Main Hoist Dryer/Separator Strongback	RW 18700 D/SP 18700 IRV 14500
D/SP Cover Plates Removal, storage and reinstallation	RBS	RB Crane Auxiliary Hoist Lifting Slings	RF 26700

Table 9.1-8 Heavy Load Operations (Continued)

Hardware Handling Tasks	Handling Systems*	Handling Equipment	In-Plant Location Elevation
RPV Opening/Closing Operations: (Continued)			
Steam Plugs Temporary Tool Installation and removal	RBS	RB Crane Auxiliary Hoist 4447 N Chain Hoist Service Platform Refueling Machine	RF 26700 IRV 15500
Steam Separator/Shroud Head Removal, storage and reinstallation. Include unbolting shroud head bolts from Refueling Platform	RBS	RB Crane Main Hoist Dryer/Separator Refueling Machine	RW 18700 IRV 9500 D/SP 18700
Refueling Operations:			
New-Fuel: Receive at G/F & lift to RF Receiving, inspection, remove outer container	RBS	RB Crane Auxiliary Hoist	RB 7300 RF 26700
Remove inner container and store fuel bundle in new fuel vault rack. Move fuel to new fuel inspection stand, inspect and return to storage.	RBS	RB Crane Auxiliary Hoist	RF 26700 NFS 18700 NFI 18700
Move new fuel from vault to fuel pool, storage of fuel channel fixtures. Channel new fuel and store. Move channeled fuel and load into reactor core.	RBS	RB Crane Auxiliary Hoist Refueling Machine Auxiliary Hoist Fuel Grapple	NFS 18700 FSP 14800 FCF 14800 RF 26700 RVC 9500
Fuel Cask: Receive, lift to refueling floor. Lower into cask washdown area, washdown and move to load pit. Move spent fuel to cask load pit. Move loaded cask to cask washdown area. Move cask to G/F for shipment.	RBS	RB Crane Main Hoist Auxiliary Hoist Refueling Machine Auxiliary Hoists Fuel Grapple	G/F 7300 RF 26700 FWP 18700 FLP 14800

Table 9.1-8 Heavy Load Operations (Continued)

Hardware Handling Tasks	Handling Systems*	Handling Equipment	In-Plant Location Elevation
Reactor Service Operations:			
Control Rod Blades Replacement including adjacent fuel bundles using blade guides, moving and storage in equipment storage rack and blade guide removal & installation. Fuel support removal and reinstallation.	RBS	Refueling Machine Auxiliary Hoists Fuel Grapple ~~*Dual Fuel Support Grapple / Control Rod Grapple*~~Control Rod and Fuel Support Grapple	RVC 9500 RV 5300
Control Rod Guide Tube (CRGT) (Nonroutine) removal & replacement. Prior removal of control rod, fuel, fuel support and blade guide. See above.	RBS	Refueling Machine Auxiliary Hoists CRGT Grapple	RVC 5300
Internal Recirculation Pump Servicing: Removal of pump impeller shaft, diffuser, wear ring, piston ring and stretch tube through annulus between shroud and RPV I.D. wall. Move impeller to fuel storage pool.	RBS	Refueling Machine Auxiliary Hoist Service Platform Pump Impeller Grapple	FSP 18700 IRV 3000
Upper Drywell Servicing			
MSIVs and SRVs Servicing: removal, installation, and transportation for repair and calibrations from installed location to RCCV entrance and up to special service room area and return.	UDS SRM(C)	Monorail for servicing MSIVs and SRVs Monorail Hoist Transportation Cart Hatchway Hoist Wall Mount	UDW 12500 RB 12500 RB 18700 SRM 18700(c)
	MSS	Steam Tunnel Crane Hoist Transportation Cart Hatchway Hoist Wall Mount	MST 12500 SRM 18700(c)

Table 9.1-8 Heavy Load Operations (Continued)

Hardware Handling Tasks	Handling Systems*	Handling Equipment	In-Plant Location Elevation
Lower Drywell Servicing:			
RIPs Motors Removal and installation and transport to service area and return during maintenance.	LDS SRM(B)	Jack Screws Transportation Cart Equipment Platform Turntable L/D RIP Hoist	L/D(–)2500 L/D(–)6700 SRM(–)6700 (C)
RIP Heat Exchangers Removal and installation for replacement or servicing	LDS RBS	Special Rigging Transportation Cart Equipment Platform L/D RIP Hoist	L/D(–)2500 L/D(–)6700 R/B(–)6700 R/B(–)7300
FMCRD Control Rod Drives Removal and installation from/to RPV for maintenance	LDS SRM(A)	~~*FMCRD Remote Handling Machine*~~ FMCRD Handling Equipment	LDW/URV (–)6700
(1) Motor and seal replacement	~~*SRM(A)*~~LDS	FMCRD Handling Equipment	
(2) FMCRD drive mechanism replacement	LDS	~~*FMCRD motor servicing machine*~~ FMCRD Handling Equipment	SRM(–)6700(A)
(3) Move CRD hardware to service room area for service	LDS SRM(A)	Lifting/handling device to move CRD hardware to service room area for service	LDW(–)6700 SRM(–)6700(A)
Neutron Monitor Sensor Replacement and servicing	LDS RBS	Refueling Platform Auxiliary Hoist Special Tools cask onto tunnel track.	RVC 5300

* See Table 9.1-9 for Legend.

Table 9.1-9 Legend for In-Plant Locations/Elevations

Elevations	Legend	Location/Description
18700	D/SP	Dryer/Separator Storage Pool
14800	FCF	Fuel Channeling Fixtures
18700 14800	FSP	Fuel Storage Pool
14800	FLP	Fuel Cask Load Pit
18700	FWP	Fuel Cask Wash Pit
7300	G/F	Ground Floor Equipment Access
18700 3000	IRV	Inside Reactor Vessel
(–)6700	LDW	Lower Drywell Area Receiving
7300	MST	Main Steam Tunnel Area
18700	NFI	New Fuel Inspection Stand
18700	NFS	New Fuel Storage Vault
33200 to 7300	RB	Reactor Building
26700	RF	Refueling Floor
9500	RVC	Reactor Vessel Core (TOP)
18700	RW	Reactor Well (TOP RPV)
18700(C) (–)6700(A) & (B)	SRM	Service Rooms: (a) CRD (b) RIP (c) MSIV & SRV
26,700 to 7300	D/W	Drywell Area
	LDS	Lower Drywell Servicing
	MSS	Main Steam Tunnel Servicing
	RBS	Reactor Building Servicing
	SSR	Special Service Rooms
	UDS	Upper Drywell Servicing

Table 9.1-10 Single-Failure-Proof Cranes

1. Reactor Building crane
2. Refueling machine crane

Table 9.1-11 Fuel Pool Cooling Heat Exchanger and Performance Data

Number of units	2
Seismic	Category I design and analysis
Types of exchangers	Horizontal U-tube/shell
Maximum primary/secondary side pressure	1.499 MPaG/1.034 MPaG
Design Condition	Normal heat load operating mode
Primary side (tube side) performance data:	
(1)Flow	250 m^3/h
(2)Inlet temperature	52°C maximum
(3)Allowable pressure drop	0.055 MPa Max.
(4)Exchanged heat	6.91 GJ/hr
Secondary side (shell side) performance data:	
(1)Flow	280 m^3/h
(2)Inlet temperature	~~39~~37.8°C maximum
(3)Allowable pressure drop	0.039 MPa Max.
(4)Type of cooling water	RCW water

Table 9.1-12 RHR-FPC Joint Heat Removal Performance Table (150 Hours Following Shutdown)

RHR-FCP Cooling Loops Combination	Maximum Heat Load *@ time = 0 t_0=150 hours	Pool Temp @ time = 0 t_0=150 hours	Maximum Pool Temp	Cooling Time to Max. Temp. From t=0
2-RHR Hx's + 2-FPC Hx's	46.1 GJ/h	52°C	52°C	t=0
2-RHR Hx's + 1-FPC Hx	46.1 GJ/h	52°C	52°C	t=0
1-RHR Hx + 2-FPC Hx's	46.1 GJ/h	52°C	54°C	~~Ý~~≈8 h
1-RHR Hx + 1-FPC Hx	46.1 GJ/h	52°C	58°C	~~Ý~~≈12 h

* Heat load based on BTP ASB 9-2

The following figures are located in Chapter 21:

Figure 9.1-1 Fuel Pool Cooling and Cleanup System P&ID (Sheets 1-3)

Figure 9.1-2 Fuel Pool Cooling and Cleanup System PFD (Sheets 1-2)

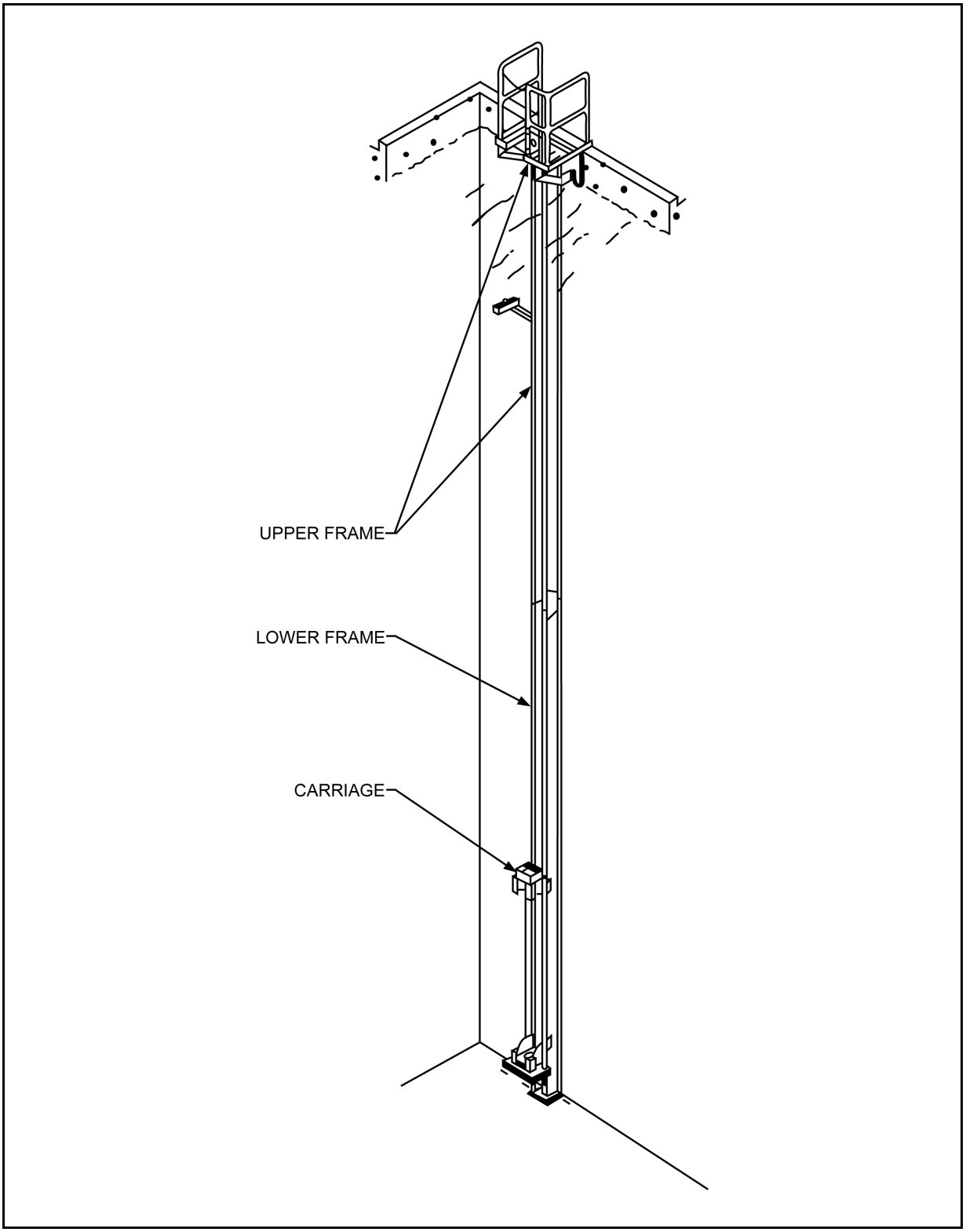

Figure 9.1-3 Fuel Preparation Machine Shown Installed in Facsimile Fuel Pool

Figure 9.1-4 ~~*New Fuel Inspection Stand*~~ Not Used

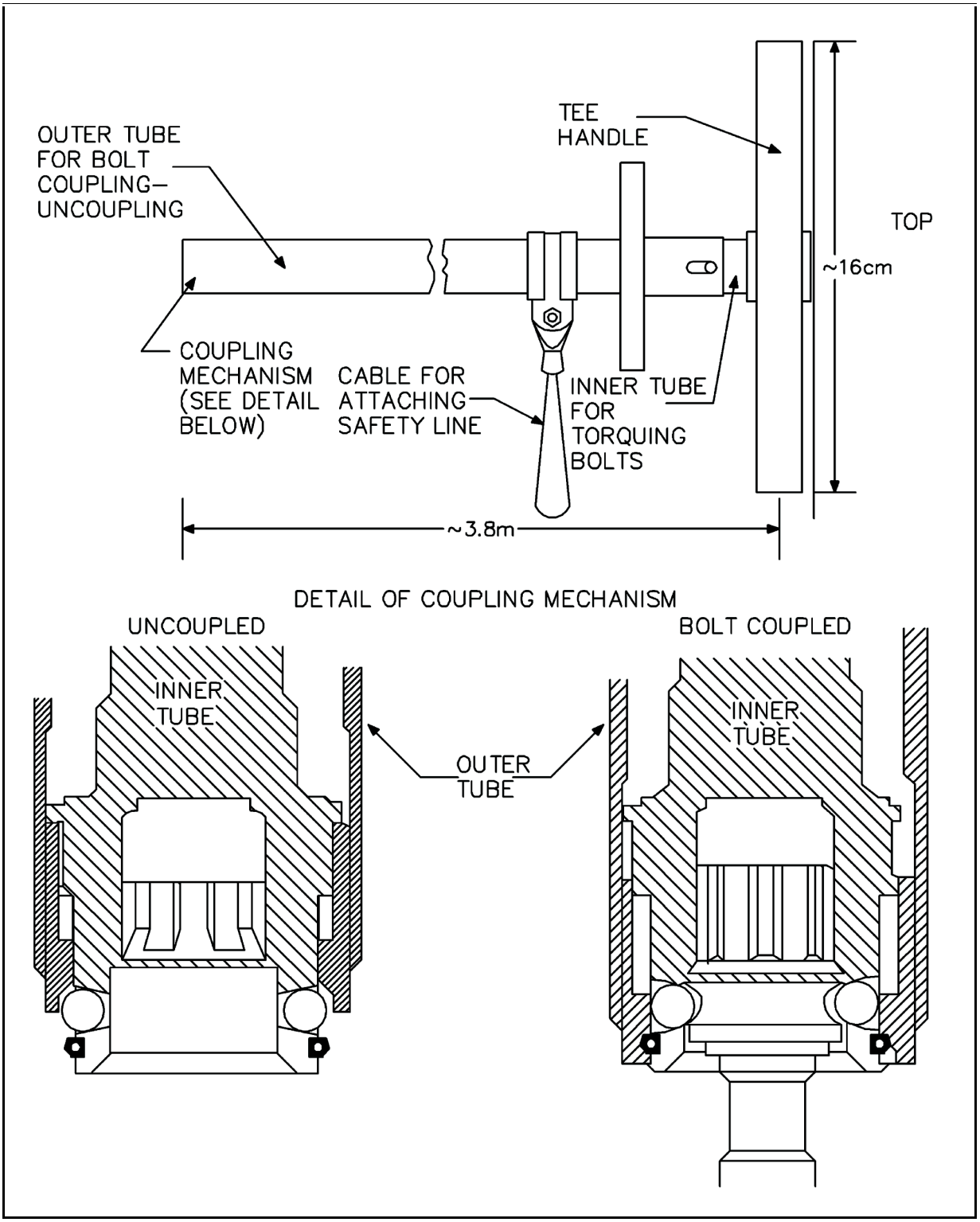

Figure 9.1-5 Channel Bolt Wrench

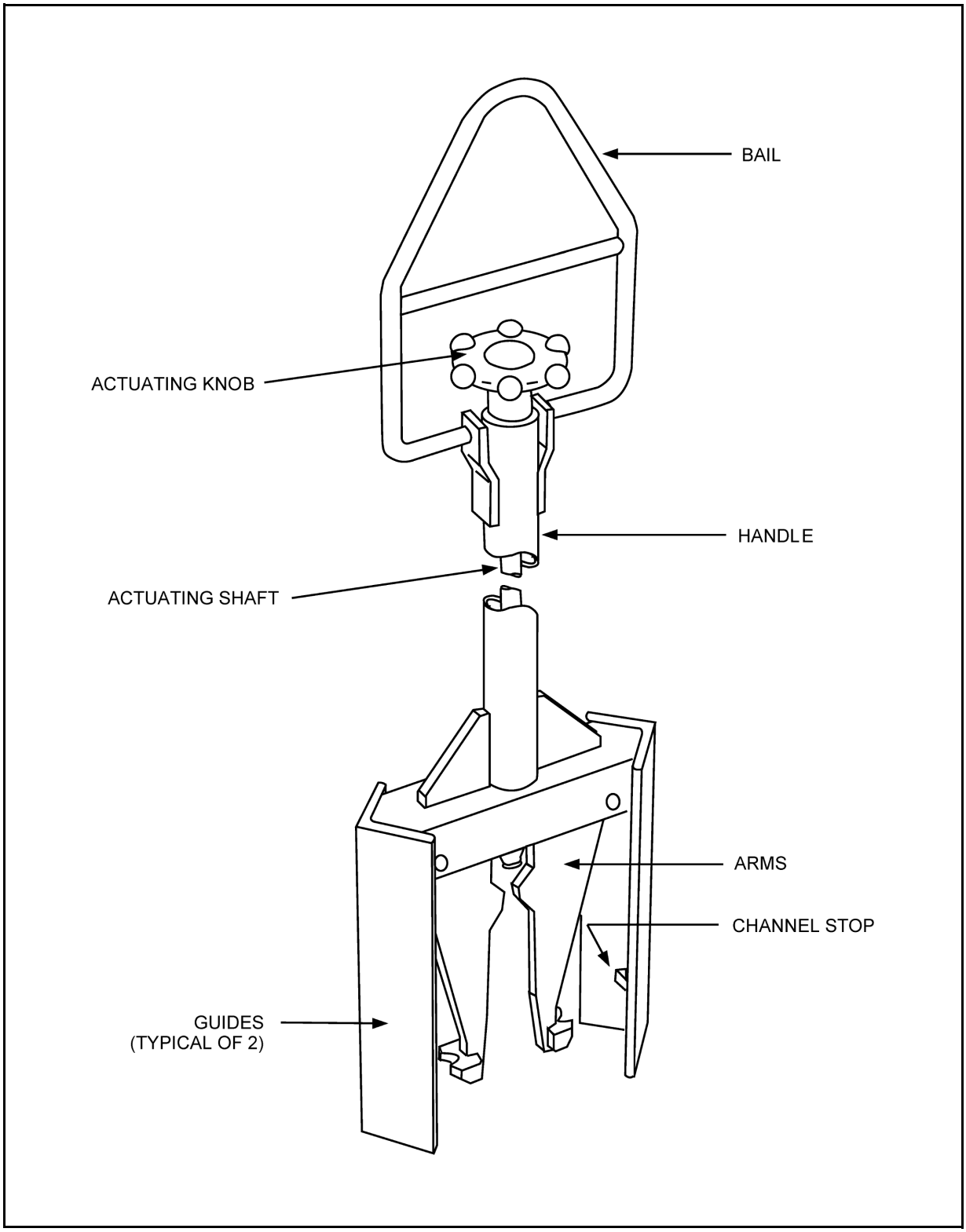

Figure 9.1-6 Channel-Handling Tool

Figure 9.1-7 ~~*Fuel Pool Vacuum Sipper*~~ Not Used

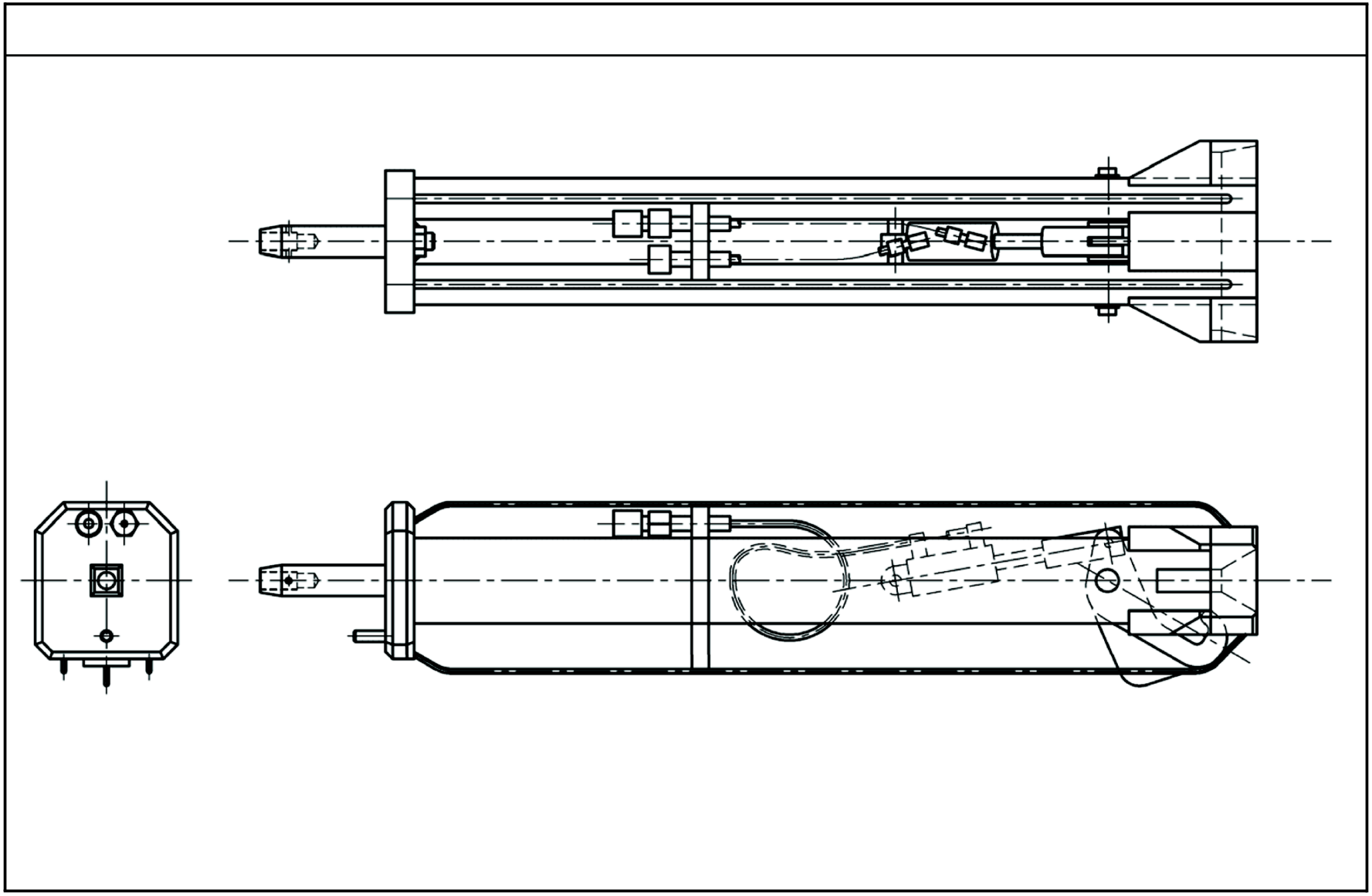

Figure 9.1-8 General-Purpose Grapple

Figure 9.1-9 Not Used

Figure 9.1-10 ~~Jib Crane Channel Handling Boom~~ Not Used

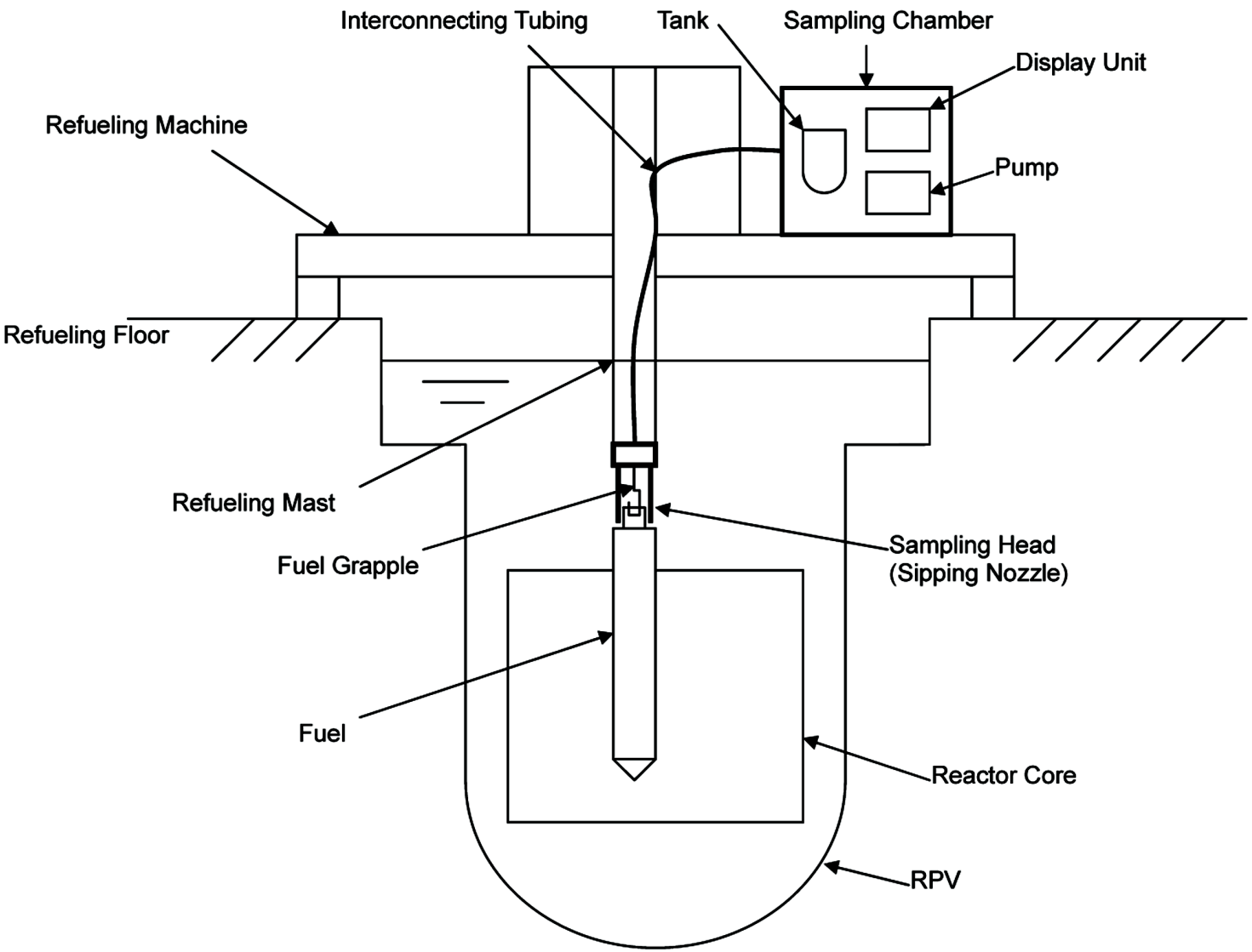

Figure 9.1-11 Fuel Assembly Sampler ~~Not Used~~

The following figure is located in Chapter 21:

- Figure 9.1-12 Plant Refueling and Servicing Sequence

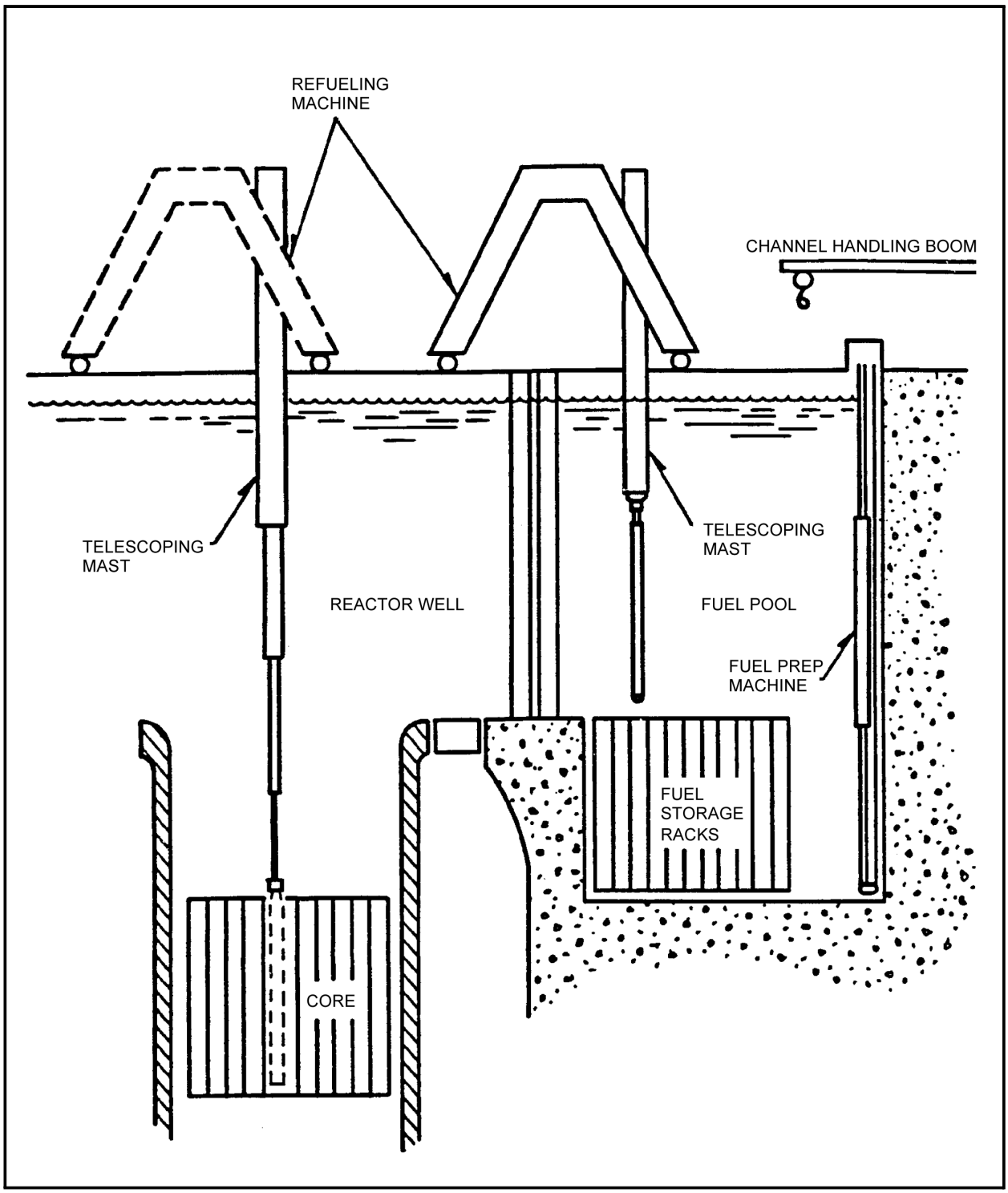

Figure 9.1-13 Simplified Section of Refueling Facilites

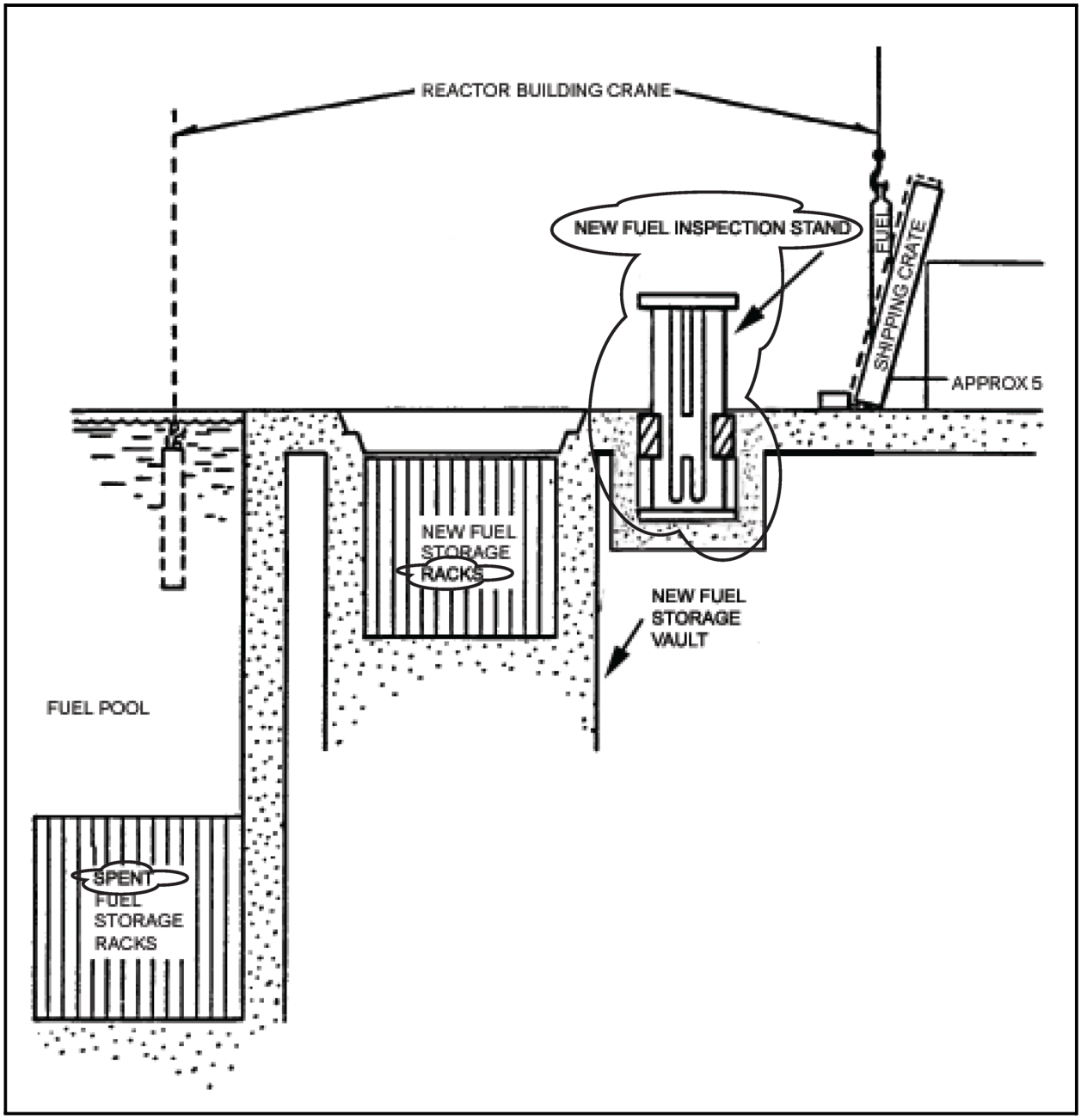

Figure 9.1-14 Simplified Section of New-Fuel Handling Facilities