2.10 Power Cycle Systems

The information in this section of the reference ABWR DCD, including all subsections, tables, and figures, is incorporated by reference with no departures or supplements.

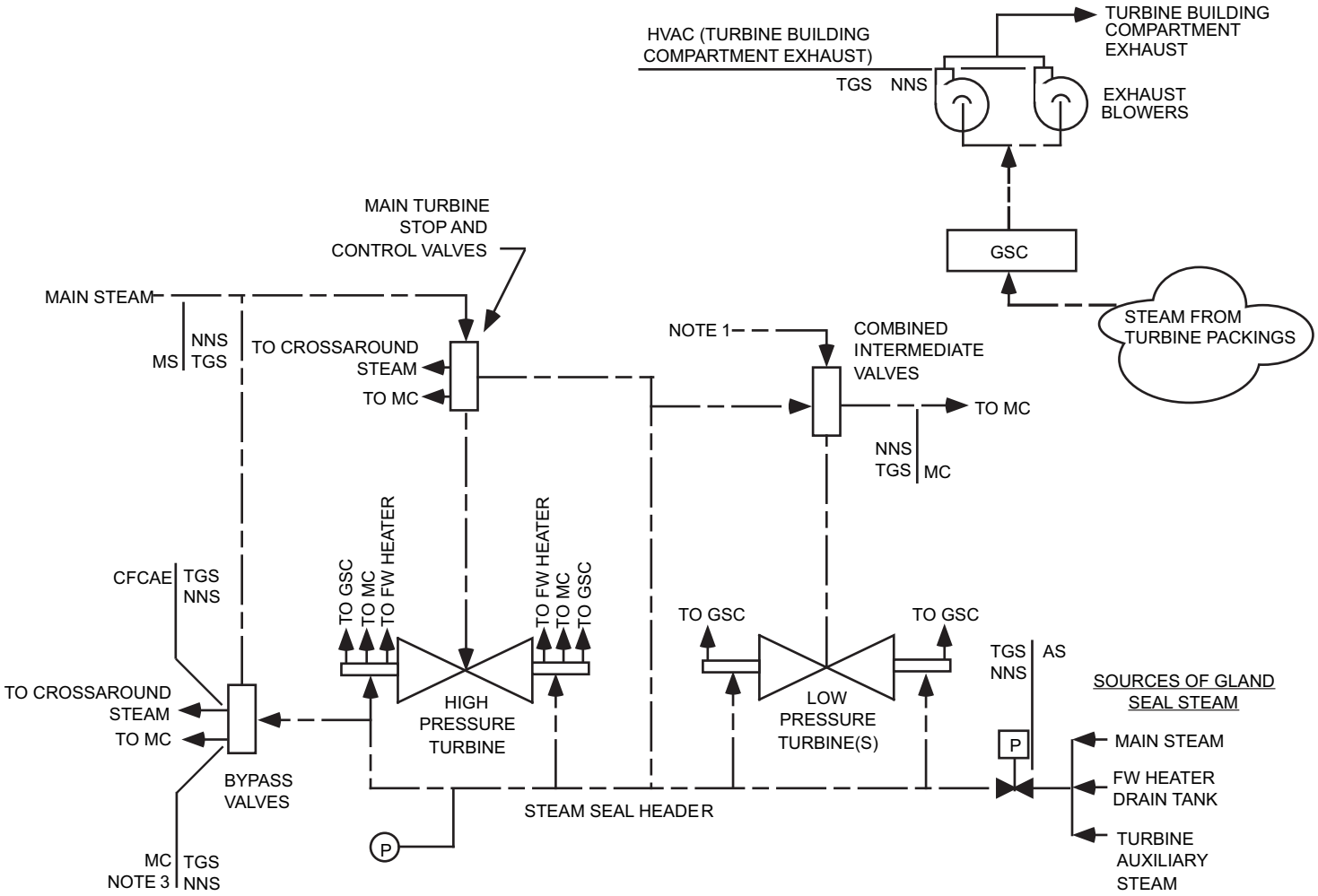

NOTES;
1. STEAM PATH BETWEEN HIGH AND LOW PRESSURE TURBINES.
2. DELETED
3. TYPICAL FOR INTERFACES WITH MC.