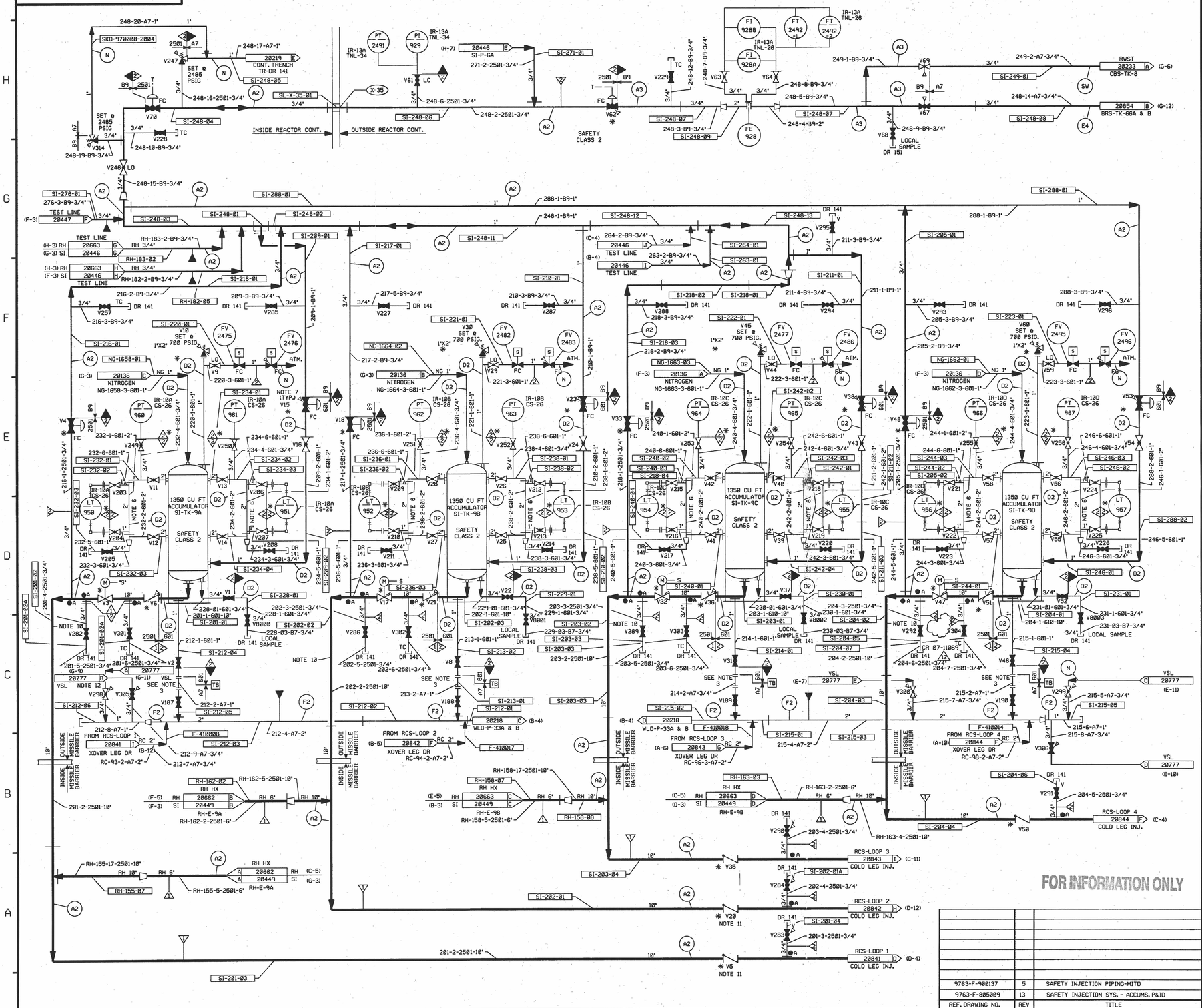

FOR P&ID REFERENCES DRAWINGS, SYMBOLS AND ABBREVIATIONS REFER TO DRAWINGS P&ID-LEGEND 1 AND P&ID - LEGEND 2.

LEGEND

		DESIGN PRESSURE	TEST PRESSURE	MIN. TEST TEMP °F	TEST MEDIUM
▽	TEST BOUNDARY				
TB	TEMPORARY TEST BOUNDARY				
A2	INTEGRITY TEST	2485 PSIG	3106/3292 PSIG	35	WATER
A3	INTEGRITY TEST (IS)	2485 PSIG	3727.5/3951 PSIG	35	WATER
D2	INTEGRITY TEST	700 PSIG	875/927.5 PSIG	35	WATER
E4	INTEGRITY TEST (IS)	150 PSIG	225/245 PSIG	35	WATER
F2	INTEGRITY TEST (IS)	100 PSIG	150/170 PSIG	35	WATER
SW	STANDING WATER				
N	NO TEST REQUIRED				

NOTE:
A. VENTS AND DRAINS (ASME CL 2 & 3, NNS) SHALL BE TESTED TO THE LAST ISOLATION VALVE.

NOTES:

1. ALL LINES, EQUIPMENT, COMPONENTS, AND INSTRUMENTS HAVE SYSTEM PREFIX SI, UNLESS NOTED OTHERWISE.
2. WORK THIS DRAWING WITH DRAWINGS 20445 THRU 20449.
3. ACCUMULATOR DRAIN TO BE PROVIDED WITH BLIND FLANGE. SPOOL PIECE TO BE INSTALLED ONLY WHEN ACCUMULATOR IS TO BE DRAINED.
4. DELETED
5. DELETED
6. 66' MINIMUM STANDPIPE TO BE PROVIDED BY A/E WITH MARK INDICATING NORMAL WATER LEVEL AS DEFINED IN THE PLANT SETPOINT DOCUMENT. LEVEL TRANSMITTER TAPS ARE LOCATED 8 INCHES ABOVE AND BELOW THE SCRIBE MARK.
7. ✳ INDICATES VALVE SUPPLIED BY WESTINGHOUSE.
8. ●A INDICATES 3/8" FLOW RESTRICTOR INSTALLED. SEE APPLICABLE DETAIL ON DWG RC-20848.
9. DELETED
10. PIPING SCHEDULE 140 MUST BE ADHERED TO DUE TO SAFETY ANALYSIS FLOW REQUIREMENTS.
11. DELETED
12. DELETED
13. CLEANLINESS CLASS "B".
14. DELETED
15. SYSTEM DESCRIPTION NUMBER IS NAH/NCH 284
16. VENT, DRAIN & TEST CONN. CODE BREAKS ARE AT THE DOWNSTREAM END OF THE OUTER ISOLATION VALVE PER 1-NHY-805111 UNLESS NOTED OTHERWISE.
17. △ INDICATES REVISION LEVEL.

PORTIONS OF THIS DRAWING ARE

NUCLEAR SAFETY RELATED

REV	DATE	DSGN	CHKD	CE	DESCRIPTION
12	12-5-07	BCS	JM	RRB	INCORP CR 07-11089 REV.0
11	10/24/06	BCS	JM	JC	INCORP MOD 03-504 DCN-00
10	6/13/97	DWS	MPW	DMQ	INCORP DCR 970008 DCN#00
9	1/17/97	DWS	BCS	DMQ	INCORP DCR 970002 CA#0 & 1
8	5/7/96	BCS	DWS	RRB	INCORP. DCR 95-23 CA-6
7	11/13/95	BCS	MPW	RJF	PARTIAL INCORP. DCR 95-23 CA-6
6	9/27/90	MRB	HP	RRC	INCORP MMOD 90-595 CA01
5	8/29/90	MRB	APL	RRC	INCORPORATED: MMOD 90-595 CA00 DELETED: NOTE 14
4	12/15/87	GPM	DWS	PAG	REVISED: NOTE 8 & 14, 16, LEGEND NOTE A PER 9763-F-900000 & ANSI B31.1 1977 SEC-137.1.25; ADDED: FLOW RESTRICTOR INDICATOR SYMBOL, ADDED: DWG CONT NO'S, TEST LINE, ALPHA DESIGNATION FOR LEGEND NOTE, NOTE 17; DELETED: NOTES 4, 11 & 12, NNS-1 CL BOUNDARY.
3	5/20/87	GPM	DWS	VWS	VALVES SI-V8000, 8001, 8002 & 80003 REVISED TO BE SHOWN NORMALLY CLOSED. REVISED CLASS BREAK FOR DRAIN LINES ON VALVES SI-V282, 286, 289 & 292. DELETED NOTE 9 FOR SAME DRAIN LINES & REPLACED WITH NEW FLOW RESTICTOR INDICATOR SYMBOL. DELETED NOTE 8 FOR DRAIN LINES ON VALVES SI-V301, 302, 303, & 304. REPLACED WITH NEW FLOW INDICATOR SYMBOL. DELETED FLOW ARROW ON HI & LOW SOURCE LINES FOR LT'S ON SI-TK-9A, B, C &D.
2	1/30/87	JDM	MRJ	VWS	INCORP DCR 860033 CA-001
1	10/9/86	BCL	MAP	RRC	ADDED DWG. LOCATION COORD. ADDED (MITD) REF DWG. REV PER PIPING ERECTION ISO (DELETED TEST LINE), CORRECTED INSTRUMENT MOUNTING, ADDED TEST DATA PER MITD, ADDED NOTE 15. ADDED NOTE 16.
0	6/24/86	OPD	VJS	RRC	ISSUED FOR OPERATIONS

REF. DRAWING NO.	REV	TITLE
9763-F-900137	5	SAFETY INJECTION PIPING-MITD
9763-F-805009	13	SAFETY INJECTION SYS. - ACCUMS. P&ID

FPL ENERGY Seabrook Station

SAFETY INJECTION SYSTEM
LOW HEAD INJECTION (ACCUMULATORS)
DETAIL D-09X

PID- 1-SI-D20450

12/04/07