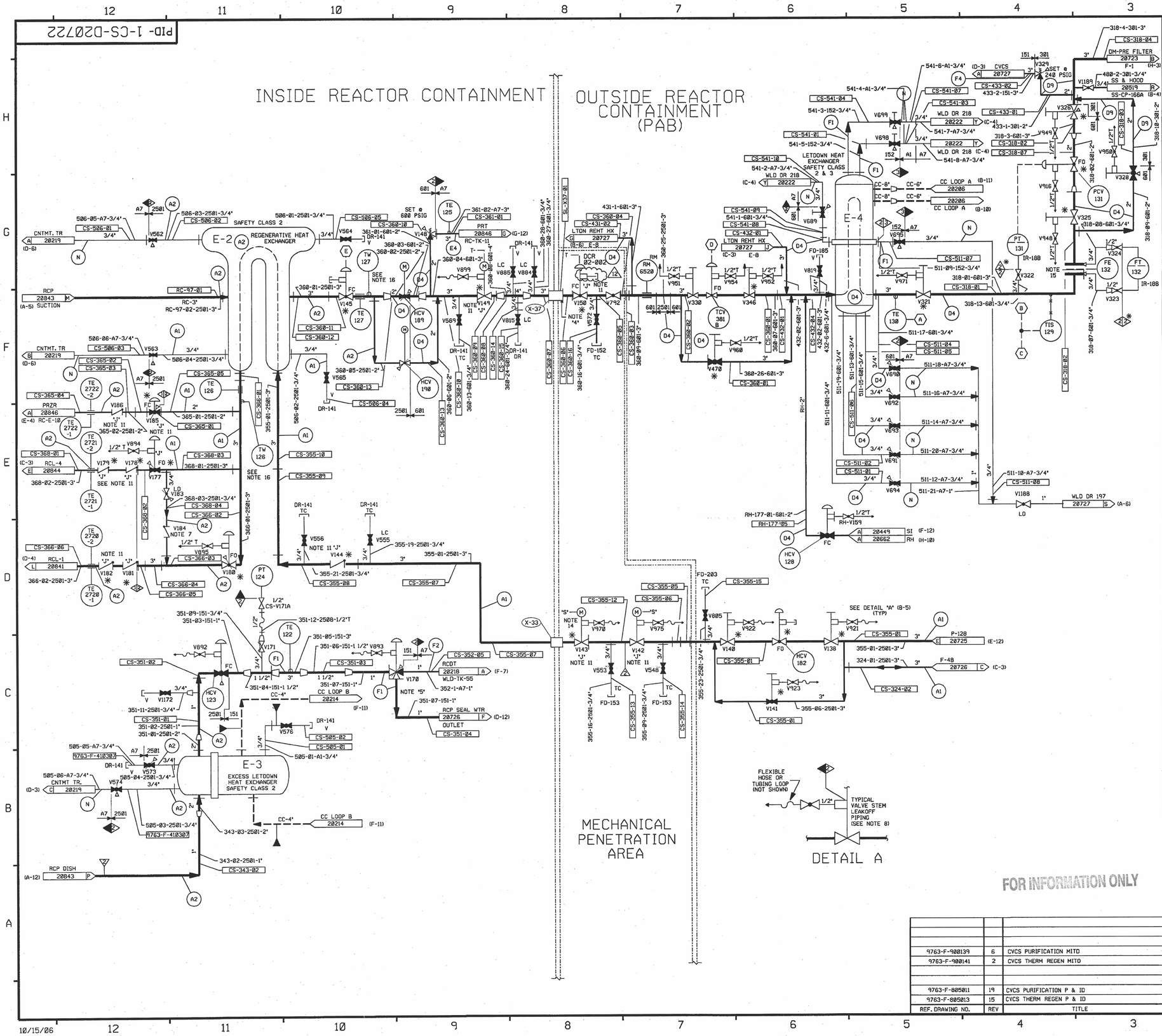

FOR P&ID REFERENCE DRAWINGS, SYMBOLS AND ABBREVIATIONS REFER TO DRAWINGS P&ID - LEGEND 1 AND P&ID - LEGEND 2

LEGEND

		DESIGN PRESSURE	TEST PRESSURE	MIN. TEST TEMP° F	TEST MEDIUM
TEST BOUNDARY					
F4	INTEGRITY TEST	75 PSIG	94/100 PSIG	35	WATER
A1	INTEGRITY TEST	2735 PSIG	3419/3624 PSIG	35	WATER
A2	INTEGRITY TEST	2485 PSIG	3106/3292 PSIG	35	WATER
D4	INTEGRITY TEST	600 PSIG	750/795 PSIG	35	WATER
D9	INTEGRITY TEST	240 PSIG	300/318 PSIG	35	WATER
E1	INTEGRITY TEST (IS)	250 PSIG	375/398 PSIG	35	WATER
E4	INTEGRITY TEST (IS)	150 PSIG	225/245 PSIG	35	WATER
E9	INTEGRITY TEST (IS)	200 PSIG	300/318 PSIG	35	WATER
F1	INTEGRITY TEST	150 PSIG	187.5/199 PSIG	35	WATER
F2	INTEGRITY TEST (IS)	100 PSIG	150/170 PSIG	35	WATER
P27	INTEGRITY TEST	75 PSIG	94/100 PSIG	35	AIR/N_2
N	NO TEST REQUIRED				

NOTES:

A. VENTS AND DRAINS WITH CAPS/BLIND FLANGES ETC. (ASME CL 2 & 3) SHALL BE TESTED TO THE LAST ISOLATION VALVE.

B. REACTOR CONTAINMENT PENETRATION SEAL ATTACHMENT WELD TESTED SATISFACTORILY AS FOLLOWS:

X-28 PER CS-06 X-30 PER CS-09 X-33 PER CS-01
X-29 PER CS-07 X-31 PER CS-08 X-37 PER CS-02 & 03

C. INACCESSIBLE PORTIONS OF LINE NO'S 360-9-601-3" AND 332-7-151-2" IN PAB PIPE TRENCHES AT ELEV. (-)6 & (-)26 TESTED SATISFACTORILY PER CS-04 AND CS-05 RESPECTIVELY.

D. ASME (D4) TEST IS EXTENDED TO THE ANSI PORTION PER MM-13001A.

NOTES:

1) WORK THIS DWG WITH DWGS. 20720 & 20723 THRU 20729.
2) ALL LINES, EQUIP., COMPONENTS & INSTRUMENTS HAVE SYSTEM PREFIX "CS", UNLESS NOTED OTHERWISE.
3) VENT AND DRAIN CODE BREAKS ARE AT THE DOWNSTREAM END OF THE OUTER ISOLATION VALVE PER 1-NHY-805111 UNLESS NOTED OTHERWISE.
4) DELAY TIME RCS TO HERE MUST BE 45 SECONDS MIN.
5) VALVE FAILS WITH FLOW TO SEAL WATER RETURN FILTER.
6) DELETED
7) SPRING LOADED CHECK VALVE.
8) REFER TO DRAWING VSL-20774, FOR VALVE LEAKOFFS
9) INSTRUMENT REFERENCE.

(A) TO CONTROL VALVE TV-130 ON DWG. 20286.

(B) TO 3-WAY VALVE TCV-129 ON DWG. 20723.

(C) TO TIS-382 ON DWG. 20728.

(D) TO TCV-381A, TE-381, TCV-386 & TE-386 ON DWG. 20727.

(E) FOR AUTO CLOSE SIGNALS SEE LOGIC 1-NHY-503367

10) CLEANLINESS CLASS "B".
11) THE IDENTIFICATION "J" NEAR A VALVE DENOTES THAT VALVE IS DESIGNATED FOR INSERVICE TESTING.
12) SD NO. NAH/NCH-282
13) ✳ INDICATES VALVE SUPPLIED BY WESTINGHOUSE.
14) LOCATED AS CLOSE AS POSSIBLE TO CONTAINMENT.
15) ORIFICE PLATE NON-ASME.
16) TW-126 AND TW-127 TO BE ABANDONED IN PLACE.

PORTIONS OF THIS DRAWING ARE

NUCLEAR SAFETY RELATED

REV	DATE	DSGN	CHKD	CE	DESCRIPTION
12	10-17-06	BCS	JM	RCB	INCORP. DCR 02-002 DCN-09
11	10/14/06	BCS	JM	RRB	INCORP. DCR 05-003 DCN 00 & MMOD 03-504 DCN 00 PARTIAL INCORP. DCR 02-002 DCN-09
10	10/16/03	BCS	MPW	RRB	INCORP DCR 02-002 DCN 01, 02, 03
9	9/12/02	BCS	JM	TAS	INCORP DCR 00-001 DCN 00
8	6/11/00	MPW	BCS	RWM	INCORP DCR 99-18 DCN 00
7	6/10/99	DWS	RWS	DJM	INCORP MMOD 970610 DCN#00
6	4/13/92	MRB	BCL	JEV	INCORP. MMOD 91-515 CA0
5	12/5/89	MRB	PAL	WFD	INCORP. DCR 89-12 CA
4	5/9/89	MRB	GPM	GRM	INCORP. DCR 87-299 CA 04 REVISED: NOTE 2 & LEGEND NOTE A
3	10/30/87	GPM	DWS	PAS	REVISED: NOTES 3 & 8, PIPING PER AS INSTALLED CONFIGURATION, DET "D" NOTE, LEGEND NOTE A PER 9763-F-900604. ADDED: NOTE AT CS-V921, DWG CONT COORD. ALPHA DESIGNATION FOR TEST NOTES. REF DWG'S, NOTES B & C. SYS DESIGNATION FOR ISO DWG. NO. DELETED: REF DWG'S, NNS-1 CL. BOUNDARY
2	11/26/86	MRJ	WRD	RRC	ADDED DWG CONT COORD'S, REMOVED CODE FLAGS PER NOTE 3, LEAKOFF VLV CODES PER DETAIL A, REVISED DRAIN PIPE PER ASBUILT CONDITION, ADDED NOTES 13, 14 & 15. CORRECTED DRAFTING ERRORS.
0	6/20/86	DWS	BCL	RRC	ISSUED FOR OPERATIONS

REF. DRAWING NO.	REV	TITLE
9763-F-900139	6	CVCS PURIFICATION MITD
9763-F-900141	2	CVCS THERM REGEN MITD
9763-F-805011	19	CVCS PURIFICATION P & ID
9763-F-805013	15	CVCS THERM REGEN P & ID

FPL ENERGY Seabrook Station

CHEMICAL & VOLUME CONTROL SYS
HEAT EXCHANGERS
DETAIL D-01

PID- 1-CS-D20722

10/15/06