Examination Outline Cross-reference:

295001 Partial or Complete Loss of Forced Core Flow Circulation / 1 & 4

AA1.02 (10CFR 55.41.7)
Ability to operate and/or monitor the following as they apply to PARTIAL OR COMPLETE LOSS OF FORCED CORE FLOW CIRCULATION :

- RPS

Level	RO
Tier #	1
Group #	1
K/A #	295001AA1.02
Importance Rating	3.3

Proposed Question: **# 1**

Unit 1 is operating in Mode 2, at 4% Reactor Power, with the following condition:

- RECIRC PUMP 1B is **NOT** operating

RECIRC PUMP 1A DISCHARGE VALVE, 1-FCV-68-3, spuriously closes.

Based on the above conditions, which ONE of the following is the required action?

A. **IMMEDIATELY** insert a full Reactor Scram.

B. **IMMEDIATELY** commence a normal Reactor shutdown / cooldown.

C. Close RECIRC PUMP 1A SUCTION VALVE, 1-FCV-68-1, to isolate the loop.

D. Maintain RECIRC PUMP 1A DISCHARGE VALVE, 1-FCV-68-3, closed until the pump is available for re-start.

Proposed Answer: **A**

Explanation (Optional):

A **CORRECT:** AOI-68-1 is entered, BOTH Recirc Pump now are tripped. Being in Mode 2 = Immediate Rx Scram. Per 1-AOI-68-1 this is appropriate.

B INCORRECT: AOI-68-1 is entered, BOTH Recirc Pump are now tripped. Being in Mode 2 = Immediate Rx Scram. Per 1-AOI-68-1 this is appropriate.

C INCORRECT: incorrect, Closing the Suction Valve would only be prudent if isolating loop for leak / seal issues. 1-AOI-68-1, 4.2[9].

D INCORRECT: incorrect, reopening after 5 minutes is directed in 1-AOI-68-1, 4.2[11], to prevent reverse rotation and maintain idle loop tempratures within limits.

Technical Reference(s): 1-OI-68 Rev 14, 1-AOI-68-1A Rev 2 (Attach if not previously provided)

1-9-4A Rev 17 (Including version / revision number)

Proposed references to be provided to applicants during examination: NONE

Learning Objective: _____ (As available)

Question Source: Bank # _____

Modified Bank # _____ (Note changes or attach parent)

New X

Question History: Last NRC Exam _____

(Optional - Questions validated at the facility since 10/95 will generally undergo less rigorous review by the NRC; failure to provide the information will necessitate a detailed review of every question.)

Question Cognitive Level: Memory or Fundamental Knowledge

Comprehension or Analysis X

10 CFR Part 55 Content: 55.41 X

55.43

Comments:

BFN Unit 1 | Panel 9-4 1-XA-55-4A | 1-ARP-9-4A Rev. 0017 Page 36 of 47

RECIRC LOOP 1A OUT OF SERVICE 26	Sensor/Trip Point: 1-XM-068-0038/21	Recirc Loop B in service with Recirc Pump 1A discharge valve closed or Recirc Pump 1A Drive shutdown

(Page 1 of 1)

Sensor Location: 1-PNLA-009-0038. Auxiliary Instrument Room

Probable Cause: Recirculation pump A **NOT** running or pump A discharge valve (1-FCV-68-3) fully closed AND Recirculation Loop B in service.

Automatic Action: None

Operator Action:

A. **IF** alarm was received due to a trip of Recirculation Pump A, **THEN REFER TO** 1-AOI-68-1A or 1-AOI-68-1B, AND 1-OI-68 ☐

B. **IF** discharge valve was closed to prevent reverse rotation **THEN LEAVE** closed for five minutes and then **OPEN** as necessary to maintain A loop temperature. ☐

NOTE

In-service jet pump loop flows below 41 X 10^6 lbm/hr can result in inaccurate flow indication, due to positive flow from the idle Recirc loop being subtracted.

C. **IF** core flow indication becomes inaccurate, **THEN CONTACT** Reactor Engineer to perform 1-SR-3.4.1(SLO) Attachment 2 to determine actual core flow and substitute the value into ICS as necessary. ☐

References: 1-45E620-5-1, 1-47E610-1-5, GE 729E841-2, FSAR Section 13.6.2, 731E320RE-3, 12, 13, 15

F. The following valve limitations should be observed:

1. Recirc Pump discharge valve should **NOT** be opened with more than 200 psid across the valve to prevent potential valve or actuator damage.

2. Only when the jogging circuit is functioning during a pump start will the pump operate with the discharge valve less than 90% open.

3. Recirc Pump discharge valves auto close if reactor pressure drops to less than 230 psig with a LPCI initiation signal present.

J. [NER/C] When the reactor is operating with a single Recirc Pump in service, observe the following:

1. When the idle Recirc Pump was shutdown, the discharge valve should be closed for 5 minutes to ensure that the pump comes to a complete stop and prevent reverse rotation.

2. An idle Recirc Pump discharge valve should be opened as required after the initial 5 minute closure to maintain idle Recirc loop temperatures within associated temperature limits.

3. As long as Recirc loop suction or discharge is open, maintain Recirc Pump seal purge to prevent thermal stress on the seal cavity.

4. The operating Recirc Pump flow should be maintained less than 46,600 gpm.

Illustration 4
(Page 2 of 4)

Recirc System Trips/Interlocks

1.0 RECIRC SYSTEM TRIPS (continued)

B. The following signals shutdown the recirc drive (Drive Tripped alarm) and trip the feeder bkr:

1. Emergency Stop (push button depressed)

2. Pump Suction Valve < 90% Open

3. Pump Discharge Valve < 90% Open 85 Sec. After Jog Open Circuit Starts

4. Pump Discharge Valve Still Full Shut 3 Sec. After Jog Open Circuit Starts

5. Motor Instantaneous or Differential Overcurrent

6. Recirc drive over frequency.

BFN Unit 1	Recirc Pump Trip/Core Flow Decrease OPRMs Operable	1-AOI-68-1A Rev. 0002 Page 6 of 12

4.0 **OPERATOR ACTIONS**

4.1 **Immediate Actions**

None

4.2 **Subsequent Actions**

[1] **IF** both Recirc Pumps are tripped in modes 1 or 2, **THEN** (Otherwise N/A)

[1.1] **SCRAM** the Reactor. ☐

[9] **IF** Recirc Pump was tripped due to dual seal failure, **THEN** (Otherwise N/A)

[9.1] **VERIFY TRIPPED**, RECIRC DRIVE 1A(1B) NORMAL FEEDER, 1-HS-57-17(14). ☐

[9.2] **VERIFY TRIPPED**, RECIRC DRIVE 1A(1B) ALTERNATE FEEDER, 1-HS-57-15(12). ☐

[9.3] **CLOSE** tripped recirc pump suction valve using, RECIRC PUMP 1A(1B) SUCTION VALVE, 1-HS-68-1(77). ☐

[9.4] **IF** it is evident that 75°F between the dome **AND** the idle Recirc loop cannot be maintained, **THEN**

COMMENCE plant shut down and cool down in accordance with 1-GOI-100-12A. ☐

[10] **NOTIFY** Reactor Engineer to perform Reactor Recirculation System Single Loop Operation, 1-SR-3.4.1(SLO) AND to refer to Station Reactor Engineer, 0-TI-248 and Tech Specs 3.4.1 as necessary. ☐

[11] [NER/C] **WHEN** the Recirc Pump discharge valve has been closed for at least five minutes (to prevent reverse rotation of the pump) [GE SIL-517], **THEN** (N/A if Recirc Pump was isolated in Step 4.2[9])

Examination Outline Cross-reference:

295003 Partial or Complete Loss of AC / 6

AK1.03 (10CFR 55.41.8)

Knowledge of the operational implications of the following concepts as they apply to PARTIAL OR COMPLETE LOSS OF AC POWER:

- Under voltage / degraded voltage effects on electrical loads

Level	RO
Tier #	1
Group #	1
K/A #	295003AK1.03
Importance Rating	2.9

Proposed Question: **# 2**

A LOCA occurs on Unit 1 concurrent with a Loss of Offsite Power on **ALL** three Units.

A lockout occurs on Diesel Generator 1/2 D due to a protective relay actuation.

Which ONE of the following is the response of the Unit 1 Low Pressure ECCS systems?

There will be injection from__**(1)**__ of Core Spray. There will be injection from two RHR pumps in __**(2)**__.

A. **(1) BOTH** loops
(2) ONLY one loop

B. **(1) ONLY** one loop
(2) ONLY one loop

C. **(1) BOTH** loops
(2) BOTH loops

D. **(1) ONLY** one loop
(2) BOTH loops

Proposed Answer: **B**

Explanation (Optional):

A INCORRECT: Part 1 is incorrect. SD BD D will be deengergized. CS B will not auto start due to loss of SD BD D so there will be no injection from loop 2 of Core Spray. Examinee must recognize this interlock. CS A/B Pumps energized from D/G A/C respectively. Part 2 is correct. RHR loop 2 only will have injection from both pumps in the loop. RHR D power from D D/G. All Inboard Injection Valves will have power.

B **CORRECT:** Part 1 is correct. SD BD D will be deengergized. CS B will not auto start due to loss of SD BD D so there will be no injection from loop 2 of Core Spray. Part 2 is correct. RHR loop 2 only will have injection from both pumps in the loop. RHR D power from D D/G. All Inboard Injection Valves will have power.

C INCORRECT: Part 1 is incorrect. SD BD D will be deengergized. CS B will not auto start due to loss of SD BD D so there will be no injection from loop 2 of Core Spray. Examinee must recognize this interlock. Part 2 is incorrect. RHR loop 2 only will have injection from both pumps in the loop. RHR D power from D D/G. All Inboard Injection Valves will have power.

D INCORRECT: Part 1 is correct. SD BD D will be deengergized. CS B will not auto start due to loss of SD BD D so there will be no injection from loop 2 of Core Spray. Part 2 is incorrect. RHR loop 2 only will have injection from both pumps in the loop. RHR D power from D D/G. All Inboard Injection Valves will have power.

Technical Reference(s): OPL171.044 Rev 16 (Attach if not previously provided)

OPL171.045 Rev 14 (Including version / revision number)

Proposed references to be provided to applicants during examination: NONE

Learning Objective: _____ (As available)

Question Source: Bank # _____

Modified Bank # X (Note changes or attach parent)

New

Question History: Last NRC Exam Brunswick 08 #38

(Optional - Questions validated at the facility since 10/95 will generally undergo less rigorous review by the NRC; failure to provide the information will necessitate a detailed review of every question.)

Question Cognitive Level: Memory or Fundamental Knowledge

Comprehension or Analysis X

10 CFR Part 55 Content: 55.41 X

55.43

Comments:

BRUNSWICK 2008

38. A LOCA occurs on Unit One concurrent with a LOOP on both Units.

A DG3 lockout occurs due to a protective relay actuation.

Which one of the following is the response of the Unit One Low Pressure ECCS systems?

There will be injection from _____ of Core Spray.

There will be injection from two RHR pumps in _____.

A. both loops
only one loop

B. only one loop
only one loop

C. both loops
both loops

D. only one loop
both loops

OPL171.044 Rev 16

a. Power supplies Obj. V.B.5

Obj. V.C.3
Obj. V.E.4

Component	Division	Power Supply	Diesel
U1/2 RHR A	I	Shutdown Board A	1/2 A
U1/2 RHR C	I	Shutdown Board B	1/2 B
U1/2 RHR B	II	Shutdown Board C	1/2 C
U1/2 RHR D	II	Shutdown Board D	1/2 D
U3 RHR A	1	Shutdown Bd 3EA	3A
U3 RHR C	1	Shutdown Bd 3EB	3B
U3 RHR B	II	Shutdown Bd 3EC	3C
U3 RHR D	II	Shutdown Bd 3ED	

Right train/ component
Remember that the B and C pumps come off the C and B shutdown boards respectively.
BFN events have occurred due to racking out the wrong breaker which resulted in LCO 3.0.3
BFPER-997296 See OPL171.045 for details.
TP-10, 11 and 12

OPL171.045 Rev 14

Obj. V.B.3.a
Obj. V.C.2.a
Obj. V.D.10.a
Obj. V.E.12.a

e. Power supplies for all Core Spray System pump motors are shown on the following chart for Units 1, 2, and 3:

PUMP	1A	2A	3A	1B	2B	3B	1C	2C	3C	1D	2D	3D
LOOP (SYS)	I	I	I	II	II	II	I	I	I	II	II	II
ELECT. DIV.	I	I	I	II	II	II	I	I	I	II	II	II
S/D BD.	A	A	3EA	C	C	3EC	B	B	3EB	D	D	3ED
D/G	A	A	3A	C	C	3C	B	B	3B	D	D	3D

INSTRUCTOR NOTES

j. There are two specific conditions (Three for U1 & 2) that will prevent a CS pump from automatically starting

Obj. V.B.2
Obj. V.C.1

1) If a shutdown board is deenergized, neither CS pump in that system will automatically start. Systems are designed for only two-pump operation in automatic.

Example: Assume Shutdown Board A has no power at time of CS initiation. CS pumps A and C will not receive an automatic start signal. The C pump could be manually started or, if it was running prior to the initiation, it would remain running. If power is restored to Shutdown Board A, both pumps would automatically start.

Must have either K29 or K30 contact closed

AND

K31 or K32 contact closed.

Note: DGVA is deenergize to function.

Examination Outline Cross-reference:

295004 Partial or Total Loss of DC Pwr / 6

AK3.02 (10CFR 55.41.5)

Knowledge of the reasons for the following responses as they apply to PARTIAL OR COMPLETE LOSS OF DC POWER:

- Ground isolation / fault determination

Level	RO
Tier #	1
Group #	1
K/A #	295004AK3.02
Importance Rating	2.9

Proposed Question: **# 3**

Unit 2 is operating at 100% Reactor Power when the following alarm occurs:

- BAT BD 2 BKR TRIPOUT/FUSE BLOWN OR GROUND, (2-9-8C, Window 7)

It has been determined that a ground of (-) 80 volts exists **AND** the Unit Supervisor has directed that the ground be located and isolated per 0-GOI-300-2, "Electrical."

Which ONE of the following is the reason why each breaker cycled during the ground isolation process must be left open for a specified period of time?

A. This allows time for the ground indicator to indicate if the ground has cleared.

B. This allows time to prevent an inadvertent overcurrent trip on the breaker that was cycled.

C. Cycling an individual load breaker quickly could result in a trip of the battery charger due to large swings in current.

D. Cycling an individual load breaker quickly could cause an initiation of the equipment being supplied.

Proposed Answer: **A**

Explanation (Optional):

A **CORRECT:** Per 0-GOI-300-2, Section 7.2, Step 5.4, Operator is directed to leave the breaker open for at least **one** minute to allow the indicator time to indicate if the ground is cleared.

B INCORRECT: Since there is no evidence that load breakers will trip on overcurrent by cycling.

C INCORRECT: Since an overcurrent trip on a battery charger can not happen by cycling loads if everything is working normally.

D INCORRECT: Since cycling a load breaker will not initiate equipment. There is a precaution that states that if redundant AC equipment is out of service when cycling breakers that a unit trip could occur. 0-GOI-300-2, section 7.2.

Technical Reference(s): 2-9-8C window 7 Rev 13 (Attach if not previously provided)

0-GOI-300-2, Rev.85, step 7.2[5.4] (Including version / revision number)

Proposed references to be provided to applicants during examination: NONE

Learning Objective: _____ (As available)

Question Source: Bank # BF EXAM 2005-301R1

Modified Bank # _____ (Note changes or attach parent)

New _____

Question History: Last NRC Exam 0407A

(Optional - Questions validated at the facility since 10/95 will generally undergo less rigorous review by the NRC; failure to provide the information will necessitate a detailed review of every question.)

Question Cognitive Level: Memory or Fundamental Knowledge **X**

Comprehension or Analysis

10 CFR Part 55 Content: 55.41 **X**

55.43

Comments:

BAT BD 2 BKR TRIPOUT/FUSE BLOWN OR GROUND 2-EA-57-117	
BLUE BAR	7

(Page 1 of 1)

Sensor/Trip Point:
Breaker tripout.
Ground on Battery Bd 2.
Cleared Fuse

Sensor Location: Battery Bd Rm 2, El 593'

Probable Cause:
A. Breaker trip on overload or fault (thermal and magnetic trip) on Panels 1-14.
B. 1100-series breakers (Heineman) on Panel 11 annunicate in OFF or TRIP.
C. A ground fault exists on 250V DC Battery Bd 2.
D. Fuse failure to instrumentation circuit, Pnl 1.
E. Fuse 0-FU2-039-0007 cleared.
F. Blown light bulb in ground detector indicator photo cell.

Automatic Action:
A. None

Operator Action:
A. **CHECK** Battery Bd 2 VOLTS, 2-EI-57-37, and AMPS, 2-EI-57-38, on Panel 2-9-8 to determine if load is on battery or charger. ☐
B. **CHECK** Battery Bd 2 for abnormal conditions: ☐
- Loss of volt and amp indication. ☐
- Breaker position. ☐
- Ground indication. ☐
- Fuse failure. ☐
- Check ground detector indicator photo cell light bulb (requires electrical maintenance). ☐

C. **NOTIFY** Unit 3 Unit Supervisor. ☐
D. **CHECK** condition of equipment fed from tripped breaker and attempt reclosure as directed by Unit Supervisor. ☐
E. **REFER TO** TS Section 3.8.7. ☐
F. **REFER TO** 0-GOI-300-2 for grounds and location of D-C grounds. ☐
G. If alarm is invalid, **THEN** **REFER TO** 0-OI-55. ☐
H. While alarm is sealed in, **MONITOR** other breakers on the Battery Board until alarm is reset. ☐

References: 2-45E620-11 | 0-45E702-1, -3 | 0-45E702-2
TS Section 3.8.7

7.2 Grounds and Locations of D-C Grounds (continued)

NOTE

All transfers of power supplies are to be done using appropriate plant procedures.

[5] To locate the Panel with the ground or the grounded piece of equipment feeding directly from the battery board:

[5.1] **TRANSFER** to alternate feeders until the ground disappears on the ground indicator. ☐

[5.2] **ENSURE** that this transfer will **NOT** endanger the continued operation of the unit. ☐

CAUTION

The potential for a unit trip does not exist for most D-C switches when a unit is operating in a normal condition and direct current feeders are opened and closed individually until the ground is located. However, when a unit is operating with certain pieces of equipment out-of-service, such as A-C power to the Reactor Water High Level instruments, opening the power circuit to the redundant D-C Reactor Water High Level instruments can trip the unit.

NOTE

If the ground is in a circuit feed from a panel, the individual circuits on the Panel are not to be opened if there is a possibility that this action may trip the unit.

[5.3] **CHECK** the circuits which can be safely opened. ☐

[5.4] **LEAVE** the breaker open for at least one minute to allow the indicator time to indicate if the ground is clear. ☐

[6] **IF** a ground cannot be located or isolated **AND** continued operation is desired with a ground at or above the alarm setpoint on a vital D-C board, **THEN**

PERFORM a Safety Evaluation (SPP-9.4) to continue unit operation. This will ensure that safety features will not be compromised or that other grounds will not be masked. [NRC Information Notice 88-086]. ☐

Examination Outline Cross-reference:

295005 Main Turbine Generator Trip / 3

G2.4.21 (10CFR 55.41.7)

Knowledge of the parameters and logic used to assess the status of safety functions, such as reactivity control, core cooling and heat removal, reactor coolant system integrity, containment conditions, radioactivity release control, etc.

Level	RO
Tier #	1
Group #	1
K/A #	295005G2.4.21
Importance Rating	4.0

Proposed Question: **# 4**

Which ONE of the following completes the statement?

A Main Turbine Overspeed Trip on Unit 3 will occur at __**(1)**__ **AND** result in a RPS actuation if Reactor Power is > 30%, to ensure that the __**(2)**__ Safety Limit is **NOT** exceeded.

A. **(1)** 1926 rpm
(2) MCPR

B. **(1)** 1926 rpm
(2) Reactor Pressure

C. **(1)** 2070 rpm
(2) MCPR

D. **(1)** 2070 rpm
(2) Reactor Pressure

Proposed Answer: **A**

Explanation (Optional):

A **CORRECT:** First part correct - Main Turbine Electrical Over Speed Trip occurs at 107% of rated which is 1926 rpm. Second part correct – Main Turbine Stop Valve Closure and Control Valve Fast Closure Reactor Scrams reduce amount of energy required to be absorbed and along with the actions of EOC-RPT System, ensure that MCPR Safety Limit is not exceeded.

B INCORRECT: First part is correct as explained above. Second Part is incorrect. The RCS SRVs and Reactor Steam Dome Pressure – High Function have setting established to ensure the RCS Pressure SL will not be exceeded. Additionally, The APRM Neutron Flux High Function is assumed to along with SRVs limit peak Reactor Pressure to less than ASME Code Limits.

C INCORRECT: First Part incorrect - Main Turbine Electrical Over Speed Trip occurs at 1926 rpm. The value 2070 rpm is plausible in that it represents 115% of rated speed which is common set point for over speed protection such as on Emergency Diesel Generators.

D INCORRECT: First part and second parts are incorrect as explained above.

Technical Reference(s): TS 3.3.1.1 Bases / TS 2.1.2 Bases (Attach if not previously provided)

OPL171.010 Rev 12 (Including version / revision number)

Proposed references to be provided to applicants during examination: NONE

Learning Objective: _____ (As available)

Question Source: Bank # _____

Modified Bank # _____ (Note changes or attach parent)

New X

Question History: Last NRC Exam _____

(Optional - Questions validated at the facility since 10/95 will generally undergo less rigorous review by the NRC; failure to provide the information will necessitate a detailed review of every question.)

Question Cognitive Level: Memory or Fundamental Knowledge X

Comprehension or Analysis

10 CFR Part 55 Content: 55.41 X

55.43

Comments:

RPS Instrumentation
B 3.3.1.1

BASES

APPLICABLE SAFETY ANALYSES, LCO, and APPLICABILITY (continued)

9. Turbine Control Valve Fast Closure, Trip Oil Pressure - Low (PS-47-142, PS-47-144, PS-47-146, and PS-47-148)

Fast closure of the TCVs results in the loss of a heat sink that produces reactor pressure, neutron flux, and heat flux transients that must be limited. Therefore, a reactor scram is initiated on TCV fast closure in anticipation of the transients that would result from the closure of these valves. The Turbine Control Valve Fast Closure, Trip Oil Pressure - Low Function is the primary scram signal for the generator load rejection event analyzed in Reference 7. For this event, the reactor scram reduces the amount of energy required to be absorbed and, along with the actions of the EOC-RPT System, ensures that the MCPR SL is not exceeded.

RPS Instrumentation
B 3.3.1.1

BASES

APPLICABLE SAFETY ANALYSES, LCO, and APPLICABILITY

2.c. Average Power Range Monitor Fixed Neutron Flux - High

The Average Power Range Monitor Fixed Neutron Flux - High Function is capable of generating a trip signal to prevent fuel damage or excessive RCS pressure. For the overpressurization protection analysis of Reference 4, the Average Power Range Monitor Fixed Neutron Flux - High Function is assumed to terminate the main steam isolation valve (MSIV) closure event and, along with the safety/relief valves (S/RVs), limits the peak reactor pressure vessel (RPV) pressure to less than the ASME Code limits. The control rod drop accident (CRDA) analysis (Ref. 5) takes credit for the Average Power Range Monitor Fixed Neutron Flux - High Function to terminate the CRDA.

RPS Instrumentation
B 3.3.1.1

BASES

APPLICABLE SAFETY ANALYSES, LCO, and APPLICABILITY (continued)

3. Reactor Vessel Steam Dome Pressure - High
(PIS-3-22AA, PIS-3-22BB, PIS-3-22C, and PIS-3-22D)

An increase in the RPV pressure during reactor operation compresses the steam voids and results in a positive reactivity insertion. This causes the neutron flux and THERMAL POWER transferred to the reactor coolant to increase, which could challenge the integrity of the fuel cladding and the RCPB. The Reactor Vessel Steam Dome Pressure - High Function initiates a scram for transients that result in a pressure increase, counteracting the pressure increase by rapidly reducing core power. For the overpressurization protection analysis of Reference 4, reactor scram (the analyses conservatively assume scram on the Average Power Range Monitor Fixed Neutron Flux - High signal, not the Reactor Vessel Steam Dome Pressure - High signal), along with the S/RVs, limits the peak RPV pressure to less than the ASME Section III Code limits.

BASES (continued)

APPLICABLE SAFETY ANALYSES

The RCS safety/relief valves and the Reactor Protection System Reactor Vessel Steam Dome Pressure - High Function have settings established to ensure that the RCS pressure SL will not be exceeded.

c.	Low turbine system oil pressure (ETS)	≤850 psig	Seals in turbine trip	
d.	High thrust bearing wear	> ± 35 mils	Wear greater than this amount is abnormal.	
e.	Electrical overspeed	107 % (1926 rpm)	Turbine blading will fail due to high centrifugal force.	
f.	Backup electrical overspeed	109 % (1962 rpm)	Backup protection for the 110 percent trip	
h.	Generator and transformer fault	86 devices	Protection from electrical faults	Refer to OI-47
i.	Reverse power on turbine-generator	0.025 amps Current flow into Generator 30 sec TD	Protects against motoring turbine and generator	Per 45E1505 1st Rev. Pwr relay trips per 224. 2nd
j.	Remote electrical Trip	Pushbutton (Panel 9-7) EHC Workstation Computer screen Panel -9-7 and Panel 9-31	Used if operator detects a dangerous condition or if turbine does not automatically trip	Rev. Pwr relay trips 5244, 5248, ACB's 1212, 1214, 1216, 1218, 1222, 1224, initiates turbine trip & sends trip signal to PCB 224.
k.	Local pushbutton trip	Pushbutton Front Standard	Local tripping of the turbine	

Examination Outline Cross-reference:

295006 SCRAM / 1

AK2.02 (10CFR 55.41.7)

Knowledge of the interrelations between SCRAM and the following:

- Reactor water level control system

Level	RO
Tier #	1
Group #	1
K/A #	295006AK2.02
Importance Rating	3.8

Proposed Question: **# 5**

Unit 1 has just Scrammed from 50% Reactor Power **AND** Reactor Water Level has lowered to (-) 10 inches.

The following conditions existed prior to the Scram:

- RFP 1A in AUTO
- RFP 1B in AUTO
- RFP 1C warming at 600 rpm

Based on the above conditions, which ONE of the following is the correct Feed Water Level Control response?

A. RFPs 1A **AND** 1B remain in AUTO to control level, max speed 5600 rpm.
RFP 1C remains at 600 rpm.

B. RFP 1A remains in AUTO to control level, max speed 4100 rpm.
RFP 1B transfers to MANUAL **AND** runs back to 600 rpm.
RFP 1C remains at 600 rpm.

C. RFPs 1A **AND** 1B transfer to MANUAL **AND** runback to 600 rpm.
RFP 1C transfers to AUTO to control level, max speed 5600 rpm.

D. RFP 1A transfers to MANUAL **AND** runs back to 600 rpm.
RFP 1B remains in AUTO to control level, max speed 4100 rpm.
RFP 1C remains at 600 rpm.

Proposed Answer: **D**

Explanation (Optional):

A INCORRECT: Scram Response logic is activated. The polling sequence is to select a RFP in AUTO, beginning with 'C' then 'B' then 'A'. With 'C' in MANUAL, 'B' is selected for level control @ 4100 max rpm. 'A' runs back to 600 rpm. 'C' remains @ 600 rpm in MANUAL.

B INCORRECT: Scram Response logic is activated. The polling sequence is to select a RFP in AUTO, beginning with 'C' then 'B' then 'A'. With 'C' in MANUAL, 'B' is selected for level control @ 4100 max rpm. 'A' runs back to 600 rpm in Manual. 'C' remains @ 600 rpm in MANUAL.

C INCORRECT: Scram Response logic is activated. The polling sequence is to select a RFP in AUTO, beginning with 'C' then 'B' then 'A'. With 'C' in MANUAL, 'B' is selected for level control @ 4100 max rpm. 'C' remains @ 600 rpm in MANUAL.

D **CORRECT:** Scram Response logic is activated. The polling sequence is to select a RFP in AUTO, beginning with 'C' then 'B' then 'A'. With 'C' in MANUAL, 'B' is next polled for level control @ 4100 max rpm. 'A' transfers to MANUAL & ramps back to 600 rpm. 'C' remains @ 600 rpm in MANUAL.

Technical Reference(s): 1-AOI-100-1 Rev 6 page 5 (Attach if not previously provided)

OPL171.012 Rev 13 pages 37 /38 (Including version / revision number)

Proposed references to be provided to applicants during examination: NONE

Learning Objective: V.B.1 (As available)

Question Source: Bank # 0707AUDIT # 62

Modified Bank # (Note changes or attach parent)

New

Question History: Last NRC Exam

(Optional - Questions validated at the facility since 10/95 will generally undergo less rigorous review by the NRC; failure to provide the information will necessitate a detailed review of every question.)

Question Cognitive Level: Memory or Fundamental Knowledge

Comprehension or Analysis **X**

10 CFR Part 55 Content: 55.41 **X**

55.43

Comments:

OPL171.012, r13

c. When activated, algorithm polls RFP controls for availability of one pump in Auto. Polling sequence is: C, B, A. The C pump is always polled first.

d. If the C pump is in Auto it will be selected for continued Auto operation, otherwise the B pump will be polled, and so on.

e. Once one Auto pump is found (normally RFP C), the algorithm sets its RFPT control logic high speed demand limit to ≈ 4,100 rpm (normally set at 5600 rpm). This limits the transient level overshoot. 4,100 ± the bias on the pump

f. The remaining pumps (normally, RFP A and B) are transferred to Manual and the algorithm sets their RFPT control logic speed at 600 rpm (normally set to 5600 rpm), or 0% output. Can be **manually** rolled up to the max. set point of 5600rpm.

BFN Unit 1	Reactor Scram	1-AOI-100-1 Rev. 0006 Page 5 of 64

3.0 AUTOMATIC ACTIONS (continued)

2. When Scram Response Logic initiates, the following actions occur:

   a. The red light at SCRAM RESPONSE INHIBIT/RESET switch, 1-HS-46-5 on Panel 1-9-5, illuminates.

   b. The logic polls RFP controls for the availability of one RFP in AUTO. The polling sequence is RFP 1C, 1B, and 1A.

   c. Once one RFP in AUTO is found (normally RFP 1C), the polled RFPT will control Reactor water level between its pressure compensated low speed clamp and an upper speed limit of 4100 rpm.

   d. The remaining pumps (normally RFP 1A and 1B) are transferred to MANUAL and the RFPT speeds are set at 600 rpm. These pumps are still available for manual or automatic control to the upper speed limit of 5600 rpm.

3. If Programmed Scram Response is initiated, the logic is reset by ANY of the following conditions:

   a. Placing RX WATER LVL CONT, 1-LIC-46-5 on Panel 1-9-5 in MANUAL.

   b. Reactor level (narrow range) exceeding level setpoint.

   c. Five minutes expire from the time the Scram Response logic was activated.

   d. Depressing SCRAM RESPONSE INHIBIT/RESET Switch, 1-HS-46-5, on Panel 1-9-5.

Examination Outline Cross-reference:

295016 Control Room Abandonment / 7

G2.4.30 (10CFR 55.41.10)

Knowledge of events related to system operation/status that must be reported to internal organizations or external agencies, such as the State, the NRC, or the transmission system operator.

Level	RO
Tier #	1
Group #	1
K/A #	295016G2.4.30
Importance Rating	2.7

Proposed Question: **# 6**

Toxic gas has entered the Unit 2 Control Room, requiring it to be abandoned.

Which ONE of the following completes the statement?

Upon entry into 2-AOI-100-2, "Control Room Abandonment," the event is classified as a/an **__(1)__ AND** the Unit **__(2)__** Unit Operator would be responsible for performing EPIP Appendix B, "Unit Operator Notifications."

	__(1)__	**__(2)__**
A.	Alert	1
B.	Alert	3
C.	Site Area Emergency	1
D.	Site Area Emergency	3

Proposed Answer: **B**

Explanation (Optional):

A INCORRECT: ALERT is correct classification and Unit 1 is affected, so responsibility shifts to an unaffected Unit [3].

B **CORRECT:** Per 1-AOI-100-2, Section 1.2 "NOTE", Evacuation or anticipated evacuation is classified by EPIP-1 as an Alert. Per EPIP-3, Section 3.1, Normally Appendix B, "Unit Operator Notifications", is conducted by a Unit 1Unit Operator. Depending upon the affected unit, this action may be delegated to a Unit Operator on an unaffected unit. In this case, Unit 1 & 2 are adjoined and Unit 1 would have to evacuate also.

C INCORRECT: ALERT is correct classification. Unit [1] is also affected, so responsibility shifts to an unaffected Unit [3]. Candidate may confuse classifications based on requirement to enter a SAE if control at the 25-32 panel is not gained w/I 20 minutes.

D INCORRECT: ALERT is correct classification and Unit [1] is also affected, so responsibility shifts to an unaffected Unit [3]. Candidate may confuse classifications based on requirement to enter a SAE if control at the 25-32 panel is not gained w/I 20 minutes.

Technical Reference(s): 1-AOI-100-2 Rev 16 page 4 (Attach if not previously provided)

EPIP-3 Rev 32 page 2 (Including version / revision number)

Proposed references to be provided to applicants during examination: NONE

Learning Objective: _____ (As available)

Question Source: Bank # _____

Modified Bank # 0707 NRC #44 (Note changes or attach parent)

New _____

Question History: Last NRC Exam 0707 NRC #44

(Optional - Questions validated at the facility since 10/95 will generally undergo less rigorous review by the NRC; failure to provide the information will necessitate a detailed review of every question.)

Question Cognitive Level: Memory or Fundamental Knowledge **X**

Comprehension or Analysis

10 CFR Part 55 Content: 55.41 **X**

55.43

Comments: Reviewed 1-AOI-100-2 Rev17 issued 3/26/09. New revision has no impact on this question.

BFN Unit 1	Control Room Abandonment	1-AOI-100-2 Rev. 0016 Page 4 of 79

1.2 Responsibilities (continued)

NOTE

Evacuation or anticipated evacuation is classified by EPIP-1 as an Alert. If the control room is evacuated and backup control from Panel 1-25-32 is **NOT** established within 20 minutes, EPIP-1 classifies the event as a Site Area Emergency. Details are contained in EPIP-1 and Technical Bases.

D. If Unit 3 Control Room is **NOT** affected, Unit 3 Unit Supervisor (SRO) assumes responsibility for EPIP implementation.

E. If ALL Control Rooms are affected, Shift Manager/Unit Supervisor (SRO) assumes responsibility for EPIP implementation.

F. Responsibility for completing panel checklists is assigned to individuals stationed in the area of equipment to be checked. Attachment 1 provides backup control station assignments.

BROWNS FERRY	ALERT	EPIP-3

3.0 EMERGENCY CLASSIFICATION ACTIONS

NOTE

Normally Appendix B, "Unit Operator Notifications", is conducted by a Unit 1, Unit Operator. Depending upon the affected unit, this action may be delegated to a Unit Operator on an unaffected unit.

3.1.1 **NOTIFY**...a Unit Operator of the Alert Emergency Classification ☐

AND

3.1.2 **DIRECT**...the Unit Operator to implement Appendix B, activating the paging system using option

☐ DRILL
☐ EMERGENCY
☐ STAGING AREA (See caution note above)

Original Question; 0707 NRC #44

Which ONE of the following describes the emergency action level required by EPIP-1, "Emergency Classification Procedure" when the control room must be abandoned and AOI-100-2, "Control Room Abandonment" is entered?

If the control room is evacuated and backup control from Panel 25-32 is NOT established AFTER
_____(1)_____, EPIP-1 classifies the event as a/an _____(2)_____.

	(1)	(2)
A.	20 minutes	Alert
B.	20 minutes	Site Area Emergency
C.	15 minutes	Alert
D.	15 minutes	Site Area Emergency

Examination Outline Cross-reference:	Level	RO
295018 Partial or Total Loss of CCW / 8	Tier #	1
AA1.02 (10CFR 55.41.7)	Group #	1
Ability to operate and/or monitor the following as they apply to PARTIAL OR COMPLETE LOSS OF COMPONENT COOLING WATER:	K/A #	295018AA1.02
• System loads	Importance Rating	3.3

Proposed Question: **# 7**

Unit 1 is operating at 100% Reactor Power, when RBCCW Pump 1A trips resulting in the following:

- RBCCW Pump discharge header pressure is 50 psig
- RBCCW PUMP DISCH HDR PRESS LOW, (1-9-4C, Window 12), in alarm

Based on current plant conditions, which ONE of the following system loads is still being cooled by RBCCW?

A. Drywell Atmospheric Coolers.

B. Fuel Pool Cooling heat exchangers.

C. RWCU non-regenerative heat exchangers.

D. RWCU Pump seal water and bearing oil coolers.

Proposed Answer: **A**

Explanation (Optional):

A **CORRECT:** RBCCW SECTIONALIZING VLV, 1-FCV-70-48, closes automatically on RBCCW Pump discharge header pressure at or below 57 psig. Drywell Atmospheric Coolers are essential loads and remain cooled by RBCCW after 1-FCV-70-48, closes.

B INCORRECT: 1-FCV-70-48 closes automatically on RBCCW Pump discharge header pressure at or below 57 psig. Fuel Pool Cooling heat exchangers are on non-essential loop which is isolated with 1-FCV-70-48 closing

C INCORRECT: 1-FCV-70-48 closes automatically on RBCCW Pump discharge header pressure at or below 57 psig. RWCU non-regenerative heat exchangers are on non-essential loop which is isolated with 1-FCV-70-48 closing

D INCORRECT: 1-FCV-70-48 closes automatically on RBCCW Pump discharge header pressure at or below 57 psig. RWCU Pump seal water and oil coolers are on non-essential loop which is isolated with 1-FCV-70-48 closing.

Technical Reference(s): 1-AOI-70-1, Rev 9 / 1-9-4C Rev 16 (Attach if not previously provided)

OPL171.047 Rev 12 (Including version / revision number)

Proposed references to be provided to applicants during examination: NONE

Learning Objective: _____ (As available)

Question Source: Bank # / Modified Bank # (Note changes or attach parent)

New X

Question History: Last NRC Exam

(Optional - Questions validated at the facility since 10/95 will generally undergo less rigorous review by the NRC; failure to provide the information will necessitate a detailed review of every question.)

Question Cognitive Level: Memory or Fundamental Knowledge

Comprehension or Analysis X

10 CFR Part 55 Content: 55.41 X

55.43

Comments:

BFN Unit 1	Loss of Reactor Building Closed Cooling Water	1-AOI-70-1 Rev. 0009 Page 4 of 12

3.0 AUTOMATIC ACTIONS

RBCCW SECTIONALIZING VLV, 1-FCV-70-48, closes automatically on RBCCW Pump discharge header pressure at or below 57 psig.

	d. Proper system flow operation is assured by monitoring the system DP (pump discharge minus pump suction).	Done Each Shift
2.	RBCCW Heat Loads	
	a. Essential loop loads	Obj. V.B.2
	• Drywell Blowers(10)	Obj. V.D.2
	• Reactor recirculation pump motor coolers (2)	
	• Reactor recirculation pump seal coolers (2)	
	• Drywell equipment drain sump heat exchanger (1)	
	b. Non-essential loop loads	Obj. V.B.3
	• Reactor Building equipment drain sump heat exchanger (1)	Obj. V.D.3
	• Reactor water cleanup pump seal water coolers and bearing oil coolers (2)	
	• RWCU Non-regenerative heat exchangers (2)	
	• Fuel pool cooling heat exchangers (2)	
	• Reactor recirculation pump discharge sample cooler (1)	

RBCCW PUMP DISCH HDR PRESS LOW 1-PA-70-15	12

(Page 1 of 1)

Sensor/Trip Point:

1-PS-70-15 — 50 psig (57 psig on local pump discharge pressure gauge)

Sensor Location: 1-LPNL-925-0008
Elevation 593
Column R-2 R-Line

Probable Cause:
A. Failed pump.
B. Broken coupling.

Automatic Action: Closes RBCCW SECTIONALIZING VLV, 1-FCV-70-48.

b. FCV-70-48 controls the RBCCW supply to the non-essential equipment loop.

(Referred to as the **SECTIONALIZING** valve)

(1) U1/2 FCV-70-48 automatically closes on:

(a) Initiation of U1/2 480V Load Shed Logic.(Loss of normal AC power with any U1/2 diesel generator tied to a U1/2 4kV shutdown board as a sole source, in conjunction with an accident signal)

(CAS signal 2.45 psig DW press with 450 psig Rx press, or -122" Level)

(b) All three units FCV-70-48 close on low RBCCW supply header pressure of 57 psig,

(corresponds to an actual header pressure of 50 psig)

Examination Outline Cross-reference:

295019 Partial or Total Loss of Inst. Air / 8

AK2.18 (10CFR 55.41.7)

Knowledge of the interrelations between PARTIAL OR TOTAL COMPLETE LOSS OF INSTRUMENT AIR and the following:

- ADS: Plant-Specific

Level	RO
Tier #	1
Group #	1
K/A #	295019AK2.18
Importance Rating	3.5

Proposed Question: **# 8**

Which ONE of the following completes the statement?

ADS Valves are designed such that on a complete loss of pneumatic supply to the accumulators, at least __**(1)**__ valve actuations can still occur **OR** as a minimum, be able to maintain the valves open for __**(2)**__ minutes.

A. **(1)** 5
(2) 30

B. **(1)** 6
(2) 30

C. **(1)** 5
(2) 45

D. **(1)** 6
(2) 45

Proposed Answer: **A**

Explanation (Optional):

A **CORRECT**: Part 1 is correct. The accumulators for the ADS MSRVs contain enough air for a minimum of **five** valve operations. Part 2 is correct. The ADS relief valves have accumulators that are sized to maintain the valves open for 30 minutes

B INCORRECT: Part 1 is incorrect. The accumulators for the MSRVs contain enough air for a minimum of **five** valve operations. Plausibility based on six be a recognizable value associated with ADS SRVs. Part 2 is correct. The ADS relief valves have accumulators that are sized to maintain the valves open for 30 minutes.

C INCORRECT: Part 1 is correct. The accumulators for the ADS MSRVs contain enough air for a minimum of **five** valve operations. Part 2 is incorrect. The value of 45 is plausible in that it relates to MSIV accumulator design criteria. When control air pressure drops to < 45 psig, the MSIV accumulator air will be routed to the MSIVs.

D INCORRECT: Part 1 is incorrect. The accumulators for the MSRVs contain enough air for a minimum of **five** valve operations. Plausibility based on six be a recognizable value associated with ADS SRVs. Part 2 is incorrect. The value of 45 is plausible in that it relates to MSIV accumulator design criteria. When control air pressure drops to < 45 psig, the MSIV accumulator air will be routed to the MSIVs.

Technical Reference(s): OPL171.054 Rev 13 (Attach if not previously provided)

OPL171.043 Rev 13 / TS Bases 3.5.1 (Including version / revision number)

Proposed references to be provided to applicants during examination: NONE

Learning Objective: _____ (As available)

Question Source: Bank #

Modified Bank # (Note changes or attach parent)

New X

Question History: Last NRC Exam

(Optional - Questions validated at the facility since 10/95 will generally undergo less rigorous review by the NRC; failure to provide the information will necessitate a detailed review of every question.)

Question Cognitive Level: Memory or Fundamental Knowledge X

Comprehension or Analysis

10 CFR Part 55 Content: 55.41 X

55.43

Comments:

3. Accumulator and check valve arrangement — TP-1

   a. Only ADS valves are provided with the accumulator arrangement

   b. Accumulators are provided to assure that the ADS valves can be held open for 30 minutes following a failure of the air supply to the accumulators — Obj. V.B.2, Obj. V.C.1, Obj. V.D.1, Obj. V.E.2

   c. Accumulators are sized to contain sufficient air for that minimum of five valve operations following a loss of Drywell Control Air — A CAD supplies 3 valves, B CAD supplies 3 valves

BASES

SURVEILLANCE REQUIREMENTS (continued)

SR 3.5.1.3

Verification every 31 days that ADS air supply header pressure is ≥ 81 psig ensures adequate air pressure for reliable ADS operation. The accumulator on each ADS valve provides pneumatic pressure for valve actuation. The design pneumatic supply pressure requirements for the accumulator are such that, following a failure of the pneumatic supply to the accumulator, at least two valve actuations can occur with the drywell at 62.5% of design pressure plus three additional actuations at 0 psig drywell pressure (Ref. 10). The ECCS safety analysis assumes only one actuation to achieve the depressurization required for operation of the low pressure ECCS. This minimum required pressure of ≥ 81 psig is provided by the Drywell Control Air System. The 31 day Frequency takes into consideration administrative controls over operation of the air system and alarms for low air pressure.

1. Main Steam System — Obj. V.B.6
   a. MSIVs and MSRVs-The air accumulators for the MSIVs contain enough air for one closing actuation. When control air pressure drops to < 45 psig, the MSIV accumulator air will be routed to the MSIVs. — Obj. V.C.8
   b. The accumulators for the MSRVs contain enough air for a minimum of five valve operations. The ADS relief valves have accumulators that are sized to maintain the valves open for 30 minutes. Non ADS valves will operate for reactor vessel pressure relief only. — Attention to detail

Examination Outline Cross-reference:

295021 Loss of Shutdown Cooling / 4

G2.2.4 (10CFR 55.41.7)

(multi-unit license) Ability to explain the variations in control board/control room layouts, systems, instrumentation, and procedural actions between units at a facility.

Level	RO
Tier #	1
Group #	1
K/A #	295021G2.2.4
Importance Rating	3.6

Proposed Question: **# 9**

1/2/3-AOI-100-2, "Control Room Abandonment," has been entered on **ALL** Units.

The following conditions exist:

- Unit 1 Reactor Pressure is 40 psig, Shutdown Cooling (SDC) **NOT** yet established
- Unit 2 Reactor Pressure is 45 psig, Shutdown Cooling (SDC) **NOT** yet established
- Unit 3 has established SDC on Loop I, operating the RHR Pump 3A

Which ONE of the following describes the **PREFERRED** SDC alignment that Unit 2 would use **AND** why?

A. Loop I, by aligning **AND** starting RHR Pump 2A; provides minimum flow protection for the operating RHRSW pumps.

B. Loop I, by aligning **AND** starting RHR Pump 2C; to prevent flow adjustments on Unit 2 from affecting Unit 3 cooldown rate.

C. Loop II, by aligning **AND** starting RHR Pump 2B; to prevent flow adjustments on Unit 2 from affecting Unit 3 cooldown rate.

D. Loop II, by aligning **AND** starting RHR Pump 2D; provides minimum flow protection for the operating RHRSW pumps.

Proposed Answer: **B**

Explanation (Optional):

A INCORRECT: 3-AOI-100-2 section 4.2, NOTE gives direction on pump alignment. Unit 2 & 3 both use Loop 1, but require different RHR pumps. RHRSW min flow protection is a CORRECT reason for this alignment.

B **CORRECT:** 3-AOI-100-2 section 4.2, NOTE gives direction on pump alignment. Unit 2 & 3 both use Loop 1. Unit 1 uses Loop 2. Unit 3 uses RHRSW A1 WHILE Unit 2 uses RHRSW C2. This splits out RHRSW flow, thus NO impact on opposing units when adjustments are being made to RHRSW flows.

C INCORRECT: 3-AOI-100-2 section 4.2, NOTE gives direction on pump alignment. Unit 2 & 3 both use Loop 1. Unit 1 uses Loop 2.
CORRECT: Is the logic behind why (3-AOI-100-2 NOTE on page 22).

D INCORRECT: 3-AOI-100-2 section 4.2, NOTE gives direction on pump alignment. Unit 2 & 3 both use Loop 1. Unit 1 uses Loop 2.
CORRECT: Is the logic behind why (3-AOI-100-2 NOTE on page 22).

Technical Reference(s): OPL171.208 Rev 5 page 14 (Attach if not previously provided)

3-AOI-100-2 Rev 18 page 23 (Including version / revision number)

Proposed references to be provided to applicants during examination: NONE

Learning Objective: V.B.6 (As available)

Question Source: Bank # ____ Modified Bank # ____ (Note changes or attach parent)

New X

Question History: Last NRC Exam ____

(Optional - Questions validated at the facility since 10/95 will generally undergo less rigorous review by the NRC; failure to provide the information will necessitate a detailed review of every question.)

Question Cognitive Level: Memory or Fundamental Knowledge

Comprehension or Analysis X

10 CFR Part 55 Content: 55.41 X

55.43

Comments: Candidate must know what loops of RHR / SDC are operated from their respective 25-32 panel. Must also know RHRSW alignments.

OPL171.208, r5

G. Unit Differences (2/3-AOI-100-2 Control Room Abandonment)

6. Step 4.2.15 -- Unit 2 aligns C2 RHRSW and 2C RHR pumps and Unit 3 aligns A1 RHRSW and 3A RHR pumps. The other RHR pump for each loop is placed in service if additional cooling is needed along with A2 RHRSW for Unit 2 and C1 RHRSW for Unit 3.

7. Step 4.2.20.3 -- Unit 2 addresses Appendix R Mod. And verifies mode select switch 2-HS-74-157 in Shutdown Position. Unit 3 does not address Appendix R switches.

BFN Unit 3	Control Room Abandonment	3-AOI-100-2 Rev. 0018 Page 23 of 92

4.2 Unit 3 Subsequent Actions (continued)

NOTE

Unit 2 and Unit 3 both align RHR Loop I for Shutdown Cooling. If both Unit 2 and Unit 3 Control Rooms have been abandoned, then coordinate the initiation of Shutdown Cooling such that one unit uses RHR Pump A and the other Unit uses RHR Pump C. This will allow minimum flow protection to be maintained for the RHRSW Pumps and prevent flow adjustments on one Unit from affecting the opposing Units Cooldown rate.

[20] **INITIATE** RHR Shutdown Cooling as follows:

[20.1] **VERIFY** REACTOR PRESSURE B, 3-PI-3-79. less than 50 psig at Panel 3-25-32.. ☐

[20.2] **IF** RHR pumps are operating in Suppression Pool Cooling or RHR LPCI, **THEN**

PERFORM the following: (Otherwise N/A) ☐

[20.2.1] At 480V RMOV Bd 3A, Compt. 12C, **VERIFY CLOSED** 3-HS-074-0059C, RHR SYSTEM I TEST VLV. ☐

[20.2.2] At 480V RMOV Bd 3A, Compt. 11C, **VERIFY CLOSED** RHR SYS I SUPPR POOL SPRAY/TEST ISOL, 3-HS-074-0057C. ☐

[20.2.3] At 480V RMOV Bd 3A, Compt. 2B, **VERIFY CLOSED** RHR SYSTEM I OUTBD INJECTION VLV, 3-HS-074-0052C. ☐

[20.2.4] At 4160V Shutdown Bd 3EA, Compt. 12, **PLACE** RHR PUMP 3A, 3-HS-074-0005C, in TRIP, to stop RHR PUMP 3A. ☐

[20.2.5] At 4160V Shutdown Bd 3EB, Compt. 4, **PLACE** RHRPUMP 3C, 3-HS-074-0016C, in TRIP to stop RHR PUMP 3C. ☐

Examination Outline Cross-reference:	Level	RO
295023 Refueling Acc / 8	Tier #	1
AA1.04 (10CFR 55.41.7)	Group #	1
Ability to operate and/or monitor the following as they apply to REFUELING ACCIDENTS:	K/A #	295023AA1.04
• Radiation monitoring equipment	Importance Rating	3.4

Proposed Question: **# 10**

To support Unit 3 Refueling Operations, a trash container is being transferred within the Dryer Storage Area. The Refueling Operator inadvertently raises the container out of the water resulting in the following conditions:

- **ALL** Refuel Zone Radiation Monitor Channels are reading 65 mr/hr
- Reactor Zone Radiation Monitor Channel, 3-RE-90-142A, has failed downscale
- **ALL** other Reactor Zone Radiation Monitor Channels are reading 75 mr/hr

Based on these conditions, which ONE of the following identifies the status of Standby Gas Treatment System?

A. **NO** Standby Gas Treatment Systems are in service.

B. **ALL** Standby Gas Treatment Systems are in service.

C. **ONLY** Standby Gas Treatment System 'B' is in service.

D. **ONLY** Standby Gas Treatment Systems 'B' **AND** 'C' are in service.

Proposed Answer: **B**

Explanation (Optional):

A INCORRECT: See Explanation B. Plausible if the candidate fails to recognize that Reactor Zone Radiation Levels have exceeded set point of 72 mr/hr or believes the failed channel will prevent initiation of all systems.

B **CORRECT**: Radiation Levels at the Refuel Zone Radiation Monitors are below the automatic initiation set point of 72 mr/hr. Radiation Levels at the Reactor Zone Radiation Monitor are above automatic initiation set point but one Division 1 Channel is downscale. With both Division 2 Channels above the initiation set point of 72 mr/hr, the Reactor Zone Monitor Trip will occur and initiate all Standby Gas Treatment Systems. Two out of two once logic.

C INCORRECT: See Explanation B. Plausible if the candidate believes the Channel RE-142A failing downscale would prevent initiation of A and C SGTS.

D INCORRECT: See Explanation B. Plausible if the candidate believes the Channel RE-142A failing downscale would prevent initiation of A SGTS.

Technical Reference(s): OPL171.018 Rev 10 (Attach if not previously provided)

OPL171.033 Rev 12 (Including version / revision number)

Proposed references to be provided to applicants during examination: NONE

Learning Objective: _____ (As available)

Question Source: Bank # _____

Modified Bank # _____ (Note changes or attach parent)

New X

Question History: Last NRC Exam _____

(Optional - Questions validated at the facility since 10/95 will generally undergo less rigorous review by the NRC; failure to provide the information will necessitate a detailed review of every question.)

Question Cognitive Level: Memory or Fundamental Knowledge

Comprehension or Analysis X

10 CFR Part 55 Content: 55.41 X

55.43

Comments:

2. Initiation Signals	Obj. V.E.3 Obj. V.C.6
a. System automatically starts with one or more of the following signals.	These signals on any unit, will start all three SGT trains when the control switch is in AUTO
(1) High drywell pressure (2.45 psi)	
(2) Low reactor water level: +2.0"	
(3) High radiation, Reactor Zone Ventilation System (72 mRem/hr) 2 monitors in the same channel or 2 monitors downscale (RE-142, -143) one in each channel.	
(4) High radiation, Refueling Zone (72 mRem/hr) 2 monitors in the same channel or 2 monitors downscale (RE-140, -141) one in each channel.	
b. All 3 SGT trains auto-start on initiation and run until manually stopped.	TP-3 and 4

a. Trips

(1) Reactor zone and refueling zone monitors work independently of each other for trip actuation

(2) High radiation trip setpoint is 72 mr/hr for the refueling and reactor zones — Rad-monitor auto resets when alarm is clear

(3) Trip logic for the refueling and the reactor zones is identical, and the following combinations will generate a trip

(a) Two high level trips in the <u>same</u> channel, (division) — Two-out-of-two, once

-OR-

(b) One downscale trip in <u>each</u> channel (division) — One-out-of-two, twice

-OR-

(c) One monitor INOP in <u>each</u> channel (division) — One-out-of-two, twice

-OR-

(4) Loss of RPS power to <u>either</u> channel — Obj. V.B.3.g, Obj. V.C.3.g

(5) Automatic actions — Obj. V.B.1,3.e, Obj. V.C.1,3.e

(a) Refuel Zone Trip — Obj V.D.6

(i) Isolate Refuel Zone on all 3 units

(ii) Start SGT and opens SGT suction to refuel zone

Examination Outline Cross-reference:

295024 High Drywell Pressure / 5

EA2.03 (10CFR 55.41.10)

Ability to determine and/or interpret the following as they apply to HIGH DRYWELL PRESSURE:

- Suppression pool level

Level	RO
Tier #	1
Group #	1
K/A #	295024EA2.03
Importance Rating	3.8

Proposed Question: **# 11**

Given the following Unit 2 plant conditions:

- Reactor Pressure is 50 psig
- Drywell Temperature is 250 °F and rising
- Drywell Pressure is 10 psig
- Suppression Pool Level is 20 feet and stable

Which ONE of the following completes the statement?

Based on these conditions, Drywell Spray __**(1)**__ permitted because Suppression Pool Level __**(2)**__.

A. **(1)** is
(2) is below the bottom of the Suppression Chamber Vent line.

B. **(1)** is
(2) is below the level where the Drywell Vacuum Breakers are located.

C. **(1)** is **NOT**
(2) is above the level of the Suppression Chamber Spray Nozzles.

D. **(1)** is **NOT**
(2) is above the level where the Drywell Vacuum Breakers are located.

Proposed Answer: **D**

Explanation (Optional):

A INCORRECT: Although Drywell Spray Initiation Limits of Curve 5 are met, EOI-2 does not permit DW spray due to high Suppression Pool Level. Suppression Pool Level is above the bottom of the Suppression Chamber vent line – 20 feet (20 feet used due to top of SP Level Instrumentation band). Additionally, this level is used to determine if Suppression Chamber vent path can be used to control Primary CTMT Pressure and is not part of the criteria for operation of Drywell Spray.

B INCORRECT: Drywell Spray is not permitted at this level as detailed above. Suppression Pool Level of 18' corresponds to the bottom of the vacuum breakers less vacuum breaker opening pressure in feet of water.

C INCORRECT: It is true that Drywell Spray is not permitted but the reason given is incorrect. Explanation A above describes the bases for not permitting Drywell Spray at the current Suppression Pool Level. Additionally, Suppression Chamber Spray nozzles are at 26 feet so would not be submersed with level at 20 feet.

D **CORRECT**: Although Drywell Spray Initiation Limits of Curve 5 are met, EOI-2 does not permit DW spray due to high Suppression Pool Level. Suppression Chamber to Drywell Vacuum Breakers will not function as designed if any portion of the valve is covered with water. Suppression Pool Level of 18' corresponds to the bottom of the vacuum breakers less vacuum breaker opening pressure in feet of water.

Technical Reference(s): EOI-2 Bases Rev 0 (Attach if not previously provided)

(Including version / revision number)

Proposed references to be provided to applicants during examination: NONE

Learning Objective: _____ (As available)

Question Source: Bank # X

Modified Bank # _____ (Note changes or attach parent)

New _____

Question History: Last NRC Exam VY 07 # 79

(Optional - Questions validated at the facility since 10/95 will generally undergo less rigorous review by the NRC; failure to provide the information will necessitate a detailed review of every question.)

Question Cognitive Level: Memory or Fundamental Knowledge

Comprehension or Analysis X

10 CFR Part 55 Content: 55.41 X

55.43

Comments:

DISCUSSION: STEP PC/P-7

This decision step has the operator evaluate the present status of suppression pool water level to determine if suppression chamber to drywell vacuum breakers are operable.

Suppression chamber to drywell vacuum breakers will not function as designed if any portion of the valve is covered with water. Suppression pool water level <A.5> corresponds to elevation of the bottom of the vacuum breakers less vacuum breaker opening pressure in feet of water.

If vacuum breakers are submerged, they are inoperable. Drywell spray operation with vacuum breakers inoperable (i.e., with no vacuum relief capability) may cause primary containment differential pressure capability to be exceeded because of the inability to equalize pressure through vacuum breakers.

If suppression pool water level is below <A.5>, suppression chamber to drywell vacuum breakers are not submerged and will function as designed. The operator continues at Step PC/P-8.

If suppression pool water level is at or above <A.5>, drywell spray operation is not permitted and the operator is directed to Step PC/P-11.

VERMONT YANKEE 2007

Ability to determine and/or interpret the following as they apply to HIGH DRYWELL PRESSURE: Suppression pool level

Proposed Question: SRO 79

Given the following plant conditions:

- RPV Pressure: 50 psig
- Drywell temperature: 250 degrees and rising
- Drywell pressure: 10 psig
- Torus temperature: 125 degrees (slowly rising)
- Torus level: 23 feet (steady)

Based on these conditions, which ONE (1) of the following statements is correct?

A. Drywell spray is permitted because torus level is below the bottom of the torus vent line.

B. Drywell spray is permitted because torus level is below the SRV Tail Pipe Level Limit.

C. Drywell spray is not permitted because torus level is above the torus spray nozzles.

D. Drywell spray is not permitted because torus level is above the torus to drywell vacuum breaker penetrations.

Examination Outline Cross-reference:

295025 High Reactor Pressure / 3

EK2.04 (10CFR 55.41.7)

Knowledge of the interrelations between HIGH REACTOR PRESSURE and the following:

- ARI/RPT/ATWS: Plant-Specific

Level	RO
Tier #	1
Group #	1
K/A #	295025EK2.04
Importance Rating	3.9

Proposed Question: **# 12**

Unit 1 is operating at 100% Reactor Power, with troubleshooting in progress to determine the cause of Turbine Control Valve swings. A momentary failure of the EHC Control System results in a Reactor Pressure spike with **NO** Bypass Valve response. A Scram signal is initiated but a hydraulic ATWS results in the following plant conditions:

- Reactor Power is 32%
- Reactor Level is (+) 30 inches
- 13 SRVs opened momentarily but **ALL** have re-closed
- Main Turbine is still on line

Which ONE of the following completes the statement?

Given that **NO** operator actions have been taken, **BOTH** Reactor Recirculation Pumps are _____.

A. tripped.

B. in service at 480 rpm.

C. in service at 1130 rpm.

D. in service with speed unchanged from prior to the transient.

Proposed Answer: **A**

Explanation (Optional):

A **CORRECT**: The momentary EHC failure resulted in elevated Reactor Pressure. As the stem indicates, all 13 SRVs opened. With opening set points for SRVs at 1135 psig, 1145 psig and 1155 psig, there is indication Reactor Pressure exceeded 1155 psig. Based on this, it can be concluded that ATWS-RPT initiation pressure of 1148 psig was reached which results in trip of both Recirc Pumps. EOC-RPT did not cause the trip since with the ATWS condition, the Main Turbine is still on line.

B INCORRECT: As explained above, no Recirc Pumps are in operation. This answer is plausible in that if ATWS-RPT had not tripped the pumps and total Feedwater flow dropped to <19% automatic runback would occur to 28% Limiter, 480 rpm.

C INCORRECT: As explained above in A, no Recirc Pumps are in operation. Plausibility is based on Recirc auto runback to 75% Limiter which corresponds to 1130 rpm. If any RFP flow <19% and level < 27", this runback is initiated. Following a Scram if level drops <0", programmed scram response of RFPTs would result in one RFPT in auto and two RFPTs at 600 rpm thus meeting the < 19% flow criteria.

D INCORRECT: As explained above in A, no Recirc Pumps are in operation. If ATWS Initiation Pressure had not been reached, no runback would have occurred making this the correct answer based on the other conditions identified in this question.

Technical Reference(s): OPL171.003 Rev 18 (Attach if not previously provided)

OPL171.007 Rev 23 (Including version / revision number)

Proposed references to be provided to applicants during examination: NONE

Learning Objective: _____ (As available)

Question Source:

Bank #		
Modified Bank #		(Note changes or attach parent)
New	X	

Question History:

Last NRC Exam	

(Optional - Questions validated at the facility since 10/95 will generally undergo less rigorous review by the NRC; failure to provide the information will necessitate a detailed review of every question.)

Question Cognitive Level: Memory or Fundamental Knowledge

Comprehension or Analysis X

10 CFR Part 55 Content: 55.41 X

55.43

Comments: OPL171.007 revised from 22 to 23. No impact on question. 5/2/09.

OPL171.003
Revision 18
Page 38 of 64

INSTRUCTOR NOTES

(a)	Provides the high reactor vessel pressure signal (1148 psig) to initiate an ATWS ARI/RPT.	TP-6 Also see PIP-95-71, this PIP gives Instr. Racks, local panels, instr.#, Master/Slave trip TVA (GE), panel in AIR, function, & power supply.
(b)	Provides input for opening logic for all SRVs. Uses slave relays (4 per SRV) set at 1135, 1145, or 1155 psig in a 2 of 2 once logic to open SRV.	
(c)	Provides input to EHC for Reactor Pressure Control	A and C OR

OPL171.007
Revision 22
Page 3 of 4

4. 75% Limiter

a.	The 75% Limiter will initiate an automatic runback of Recirc pump speed if	75% = 1130 rpm
	Any individual RFP flow is < 19% AND RPV water level lowers to the low level alarm setpoint of + 27" (level 4)	28% = 480 rpm
	OR	
	Reactor Scram Signal (Units 2 and 3 only - DCN 67325 and DCN 65487-A)	DCN 65487-A
b.	The purpose of the limiter is to automatically reduce reactor power to a value within the capacity of the remaining feedwater pumps.	
c.	This limiter seals in once activated and must be manually reset when at least one of the conditions clears.	Reset pushbutton below amber light

	d.	An amber light on panel 9-4 along with an annunciator provide indication to the operator.	
	e.	This limiter only enforces pump speeds above 1130 rpm. The operator may lower speed to any value below 1130 rpm if desired.	
5.	28% Limiter		Obj.V.B.13
	a.	The 28% Limiter will initiate an automatic runback of Recirc pump speed if Total Feedwater Flow is < 19% (15 sec TD) OR the pump discharge valve is not full open	480 rpm
	b.	The purpose of the limiter is to prevent pump overheating and cavitation of the recirc pumps and jet pumps	
	c.	This limiter enforces pump speeds above 480 rpm. The operator may lower speed below 480 rpm if desired.	Min speed is 345 rpm.

Examination Outline Cross-reference:

295026 Suppression Pool High Water Temp. / 5

EK3.02 (10CFR 55.41.5)

Knowledge of the reasons for the following responses as they apply to SUPPRESSION POOL HIGH WATER TEMPERATURE:

- Suppression pool cooling

Level	RO
Tier #	1
Group #	1
K/A #	295026EK3.02
Importance Rating	3.9

Proposed Question: **# 13**

Which ONE of the following completes the statement?

Per 2-OI-71, "Reactor Core Isolation Cooling," Suppression Pool Temperature should **NOT** exceed __**(1)**__ °F without Suppression Pool Cooling in service **AND** if Suppression Pool Temperature reaches a **MINIMUM** of __**(2)**__ °F RCIC Testing is not permitted.

A. **(1)** 90
(2) 105

B. **(1)** 90
(2) 110

C. **(1)** 95
(2) 105

D. **(1)** 95
(2) 110

Proposed Answer: **C**

Explanation (Optional):

A INCORRECT: Part 1 incorrect – SP Cooling must be placed in service prior to 95 °F. Plausibility of 90 °F based on RHR designed to maintain suppression pool temperature below 90°F. Part 2 correct – Based on 2-OI-71, "Reactor Core Isolation Cooling" and TS 3.6.2.1, RCIC Testing is NOT permitted with Suppression Pool Temperature above 105 °F

B INCORRECT: Part 1 incorrect as explained above. Part 2 incorrect – RCIC Testing must be suspended at 105 °F. The 110 °F is the Suppression Pool Temperature at which Mode Switch must be placed to Shutdown in accordance with TS 3.6.2.1.

C **CORRECT**: Part 1 correct – Per 2-OI-71, "Reactor Core Isolation Cooling" Precautions and Limitations Suppression Pool Temperature should not exceed 95 °F without Suppression Pool Cooling in service. Part 2 correct - Based on 2-OI-71, "Reactor Core Isolation Cooling" and TS 3.6.2.1, RCIC Testing is NOT permitted with Suppression Pool Temperature above 105 °F

D INCORRECT: Part 1 correct as explained above. Part 2 is incorrect as explained above.

Technical Reference(s): OPL171.040 Rev 22 (Attach if not previously provided)

2-OI-71 Rev 57 / TS 3.6.2.1 (Including version / revision number)

Proposed references to be provided to applicants during examination: NONE

Learning Objective: _____ (As available)

Question Source: Bank # _____

Modified Bank # X (Note changes or attach parent)

New _____

Question History: Last NRC Exam GGNS 09 #13

(Optional - Questions validated at the facility since 10/95 will generally undergo less rigorous review by the NRC; failure to provide the information will necessitate a detailed review of every question.)

Question Cognitive Level: Memory or Fundamental Knowledge X

Comprehension or Analysis

10 CFR Part 55 Content: 55.41 X

55.43

Comments:

g. High suppression pool temperature
   (1) RCIC is normally aligned to the CST for pump suction cooling water. Suppression pool temperature will adversely affect the pool's capacity as a heat sink. While performing RCIC surveillance, pool temperature is monitored and pool cooling is directed at 95°F bulk temperature. Calculations have shown a 1°F rise torus temperature for every 16 minutes of operation.

BFN Unit 2	Reactor Core Isolation Cooling	2-OI-71 Rev. 0057 Page 11 of 75

3.0 PRECAUTIONS AND LIMITATIONS (continued)

Q. Suppression pool water temperature should not exceed 95°F without suppression pool cooling in service to restore temperature to less than or equal to 95°F within 24 hours.

R. RCIC Testing is NOT permitted with suppression pool water temperature above 105°F.

Suppression Pool Average Temperature
3.6.2.1

ACTIONS (continued)

CONDITION	REQUIRED ACTION	COMPLETION TIME
C. Suppression pool average temperature > 105°F. AND Any OPERABLE IRM channel > 70/125 divisions of full scale on Range 7. AND Performing testing that adds heat to the suppression pool.	C.1 Suspend all testing that adds heat to the suppression pool.	Immediately

GGNS 2009

Question 13

The plant is operating at rated power.

Operators are preparing to place RCIC in service for its quarterly surveillance.

The Actions of Tech Spec 3.6.2.1 (Suppression Pool Average Temperature) allow a suppression pool temperature as high as 105°F before requiring that the RCIC test be suspended.

However, the RCIC surveillance procedure (06-OP-1E51-Q-0003) takes a more conservative approach to limiting the rise in suppression pool temperature.

Which of the following describes how the RCIC surveillance procedure addresses the rising suppression pool temperature?

Directs operators to...

A. initiate suppression pool cooling before suppression pool temperature reaches 95°F.

B. wait until suppression pool temperature reaches 95°F then control it per EP-3, Primary Containment Control.

C. suspend the RCIC surveillance if suppression pool temperature rises to >85°F.

D. wait until suppression pool temperature reaches 85°F then control it per EP-3, Primary Containment Control.

Examination Outline Cross-reference:

295028 High Drywell Temperature / 5

EK1.01 (10CFR 55.41.8)

Knowledge of the operational implications of the following concepts as they apply to HIGH DRYWELL TEMPERATURE:

- Reactor water level measurement

Level	RO
Tier #	1
Group #	1
K/A #	295028EK1.01
Importance Rating	3.5

Proposed Question: **# 14**

A Reactor coolant leak in the Drywell has occurred on Unit 2 resulting in the following conditions:

- Drywell Sprays could **NOT** be initiated due to logic failures
- Drywell Pressure is 15 psig and rising slowly
- Drywell Temperature is 305° F and steady
- Emergency Depressurization has been performed and Reactor Pressure is 22 psig
- **ALL** Secondary Containment temperatures are less than 100 °F
- Normal Range Level indicates (+) 29 inches
- Emergency Range Level indicates (+) 53 inches
- Shutdown Floodup Range Level indicates (+) 25 inches
- Post Accident Range Level indicates offscale high

Which ONE of the following identifies the Reactor Water Level instrumentation which is procedurally allowed to be used to trend Reactor Level?

[REFERENCE PROVIDED]

A. Emergency Range **ONLY**.

B. Normal **AND** Emergency Ranges **ONLY**.

C. Normal, Emergency **AND** Shutdown Floodup Ranges.

D. **NO** Reactor Water Level instrumentation may be used.

Proposed Answer: **B**

Explanation (Optional):

A INCORRECT: Normal and Emergency Range level instrumentation is available for the current conditions. Plausible in that if candidate applies Drywell Temperature to the Secondary CTMT Run Temp criteria, Normal Range would not be available but Emergency Range would remain available.

B **CORRECT**: Normal and Emergency Range level instrumentation is available for the current conditions.

C INCORRECT: The Shutdown Floodup level indicates below the Minimum Indicated Level on Caution 1 which implies actual level may be below the variable leg instrument tap. Plausible in that if the candidate applies only the requirements of RPV Saturation Curve and with the absence of erratic level indication, this would be the correct answer.

D INCORRECT: Although the "Action Required" region of Curve 8 has been entered, no indication of erratic level instruments has been given in the stem. Caution 1 part B states instruments MAY be unreliable.

Technical Reference(s): OPL171.003 Rev 18 (Attach if not previously provided)

2-EOI-1 Rev 12 (Including version / revision number)

Proposed references to be provided to applicants during examination: **2-EOI Caution #1 and Curve 8**

Learning Objective: _____ (As available)

Question Source: Bank # _____

Modified Bank # X (Note changes or attach parent)

New _____

Question History: Last NRC Exam 0707 #52

(Optional - Questions validated at the facility since 10/95 will generally undergo less rigorous review by the NRC; failure to provide the information will necessitate a detailed review of every question.)

Question Cognitive Level: Memory or Fundamental Knowledge

Comprehension or Analysis X

10 CFR Part 55 Content: 55.41 X

55.43

Comments:

2-EOI-1	PAGE 1 OF 1
RPV CONTROL	
UNIT 2 BROWNS FERRY NUCLEAR PLANT	
REV: 12	

CAUTIONS

CAUTION #1

- AN RPV WATER LVL INSTRUMENT MAY BE USED TO DETERMINE OR TREND LVL ONLY WHEN IT READS ABOVE THE MINIMUM INDICATED LVL ASSOCIATED WITH THE HIGHEST MAX DW OR SC RUN TEMP
- IF DW TEMPS ON SC AREA TEMPS (TABLE 6) AS APPLICABLE ARE OUTSIDE THE SAFE REGION OF CURVE 8 THE ASSOCIATED INSTRUMENT MAY BE UNRELIABLE DUE TO BOILING IN THE RUN

INSTRUMENT	RANGE	MINIMUM INDICATED LVL	MAX DW RUN TEMP (FROM XR-64-50 OR TI-64-52AB)	MAX SC RUN TEMP (FROM TABLE 6)
LI-3-58A, B	EMERGENCY -155 TO +60	ON SCALE	N/A	BELOW 150
		-145	N/A	151 TO 200
		-140	N/A	201 TO 250
		-130	N/A	251 TO 300
		-120	N/A	301 TO 350
LI-3-53 LI-3-60 LI-3-206 LI-3-253 LI-3-206A, B, C, D	NORMAL 0 TO +60	ON SCALE	N/A	BELOW 150
		+5	N/A	151 TO 200
		+15	N/A	201 TO 250
		+20	N/A	251 TO 300
		+30	N/A	301 TO 350
LI-3-52 LI-3-62A	POST ACCIDENT -268 TO +32	ON SCALE	N/A	N/A
LI-3-55	SHUTDOWN FLOODUP 0 TO +400	+10	BELOW 100	N/A
		+15	100 TO 150	N/A
		+20	151 TO 200	N/A
		+30	201 TO 250	N/A
		+40	251 TO 300	N/A
		+50	301 TO 350	N/A
		+65	351 TO 400	N/A

CURVE 8
RPV SATURATION TEMP

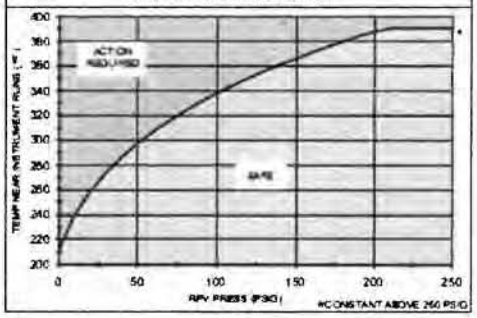

TABLE 6
SECONDARY CONTMT INSTRUMENT RUNS

INSTRUMENT	SC TEMP ELEMENTS AND LOCATIONS			
	EL 621 (74-95F)	EL 593 (74-95C AND D)	EL 565 (69-83A THRU D)	RWCU HXRM (69-29F, G, H)
LI-3-58A	°F	°F	N/A	°F
LI-3-58B	°F	°F	N/A	N/A
LI-3-53	°F	°F	N/A	°F
LI-3-60	°F	°F	N/A	N/A
LI-3-206	°F	°F	N/A	°F
LI-3-253	°F	°F	N/A	N/A
LI-3-52	°F	°F	°F	N/A
LI-3-62A	°F	°F	°F	N/A
LI-3-55	°F	°F	N/A	N/A
LI-3-206A, B	°F	°F	N/A	°F
LI-3-206C, D	°F	°F	N/A	N/A

(3) Plant transients can cause errors in the sensed level primarily because of the vessel pressure and drywell temperature variations.

(a) Reference leg flashing is still possible during rapid de-pressurization transients; however, the effect is minimal since most of the reference legs (vertical runs) are located outside the drywell and are now much cooler than before (during reactor power operations). Additionally "RVLIS" minimize this effect.

Reference leg flashing results in erroneous high level indications. Level setpoints are shifted in a non-conservative direction. Obj. V.B.1(

Examination Outline Cross-reference:

295030 Low Suppression Pool Wtr Lvl / 5

EK3.03 (10CFR 55.41.5)

Knowledge of the reasons for the following responses as they apply to LOW SUPPRESSION POOL WATER LEVEL:

- RCIC operation: Plant-Specific

Level	RO
Tier #	1
Group #	1
K/A #	295030EK3.03
Importance Rating	3.6

Proposed Question: **# 15**

The following plant conditions are noted on Unit 2, following a small break LOCA:

- Reactor Water Level is (-) 46 inches and rising slowly
- Reactor Pressure 620 psig and stable
- Suppression Chamber Pressure 10 psig and rising slowly
- Suppression Pool Level 12.70 feet and lowering slowly
- Suppression Pool Temperature is 150 °F and stable
- The Reactor Mode Switch is stuck in the RUN position

Which ONE of the following identifies the required Operator action(s) for Reactor Water Level control in accordance with 2-EOI-1, "RPV Control," **AND** 2-EOI-2, "Primary Containment Control"?

A. Secure HPCI **AND** transition Reactor Water Level control to the Reactor Feed Pumps.

B. Secure HPCI **AND** transition Reactor Water Level control to RCIC with maximized flow.

C. Secure RCIC due to the fact that elevated Suppression Chamber Pressure will trip RCIC on high exhaust pressure. HPCI continues to operate.

D. Secure HPCI **AND** RCIC due to the fact that operating either with a suction temperature above 140 °F will cause equipment damage.

Proposed Answer: **B**

Explanation (Optional):

A INCORRECT: While HPCI must be secured due to Suppression Pool Water Level dropping below 12.75 feet (as detailed above), the spurious Group 1 PCIS isolation has closed the MSIV's. Although this may be a plausible option, Appendix 8B would have to be executed to re-open the MSIVs before the transition to Feed Pumps could be made. With the mode switch in RUN and < 852 psig, a Group 1 isolation is initiated (MSIVs closed)

B **CORRECT:** RCIC and HPCI system setpoints, due to their distinct similarities, are often confused. HPCI must be secured due to Suppression Pool Water Level dropping below 12.75 feet, per EOI-2 Retainment Override SP/L-4 "Secure HPCI Irrespective of Adequate Core Cooling." RCIC is running and would be the proper choice for level control with the MSIVs closed (spurious Group 1 isolation).

C INCORRECT: RCIC is currently running by given indications/parameters. Additionally, While this is a test of a specific, delineated CAUTION in the EOIs that RCIC may trip on high backpressure, the information provided on Suppression Chamber pressure @ "10 psig and rising" would not warrant tripping the RCIC Turbine if it were running. While HPCI must be secured due to Suppression Pool Water Level dropping below 12.75 feet.

D INCORRECT: While this is also a test of a specific CAUTION in the EOIs that damage may occur, there is NO information provided, or reason to believe, that HPCI or RCIC is lined up to the Suppression Pool as a suction source. Both would be lined up to their EOI-directed suction source of the CST. NO evidence exists of a Low CST Level or a High Suppression Pool Level, which would be the catalyst for a suction source swap.

Technical Reference(s): 2-EOI-1 Rev 12 / 2-EOI-2 Rev 10 (Attach if not previously provided)

OPL171.040 Rev 22, OPL171.017 Rev 13 (Including version / revision number)

Proposed references to be provided to applicants during examination: NONE

Learning Objective: V.B.9 / V.B.11 (As available)

Question Source: Bank # ____ Modified Bank # ____ (Note changes or attach parent)

New X

Question History: Last NRC Exam ____

(Optional - Questions validated at the facility since 10/95 will generally undergo less rigorous review by the NRC; failure to provide the information will necessitate a detailed review of every question.)

Question Cognitive Level: Memory or Fundamental Knowledge

Comprehension or Analysis X

10 CFR Part 55 Content: 55.41 X

55.43

Comments:

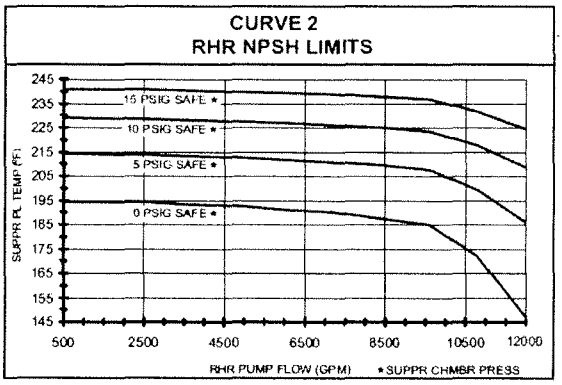

CAUTIONS

CAUTION #2

OPERATION OF RHR OR CS WITH SUCTION FROM THE SUPPR PL MAY RESULT IN EQUIPMENT DAMAGE IF:

- PUMP FLOW IS ABOVE THE NPSH LIMIT (CURVE 1 OR 2)
  OR
- SUPPR PL LVL IS BELOW THE VORTEX LIMIT (10 FT).

CAUTION #3

ELEVATED SUPPR CHMBR PRESS MAY TRIP THE RCIC TURB ON HIGH EXH PRESS

CAUTION #6

OPERATING HPCI OR RCIC TURBs WITH SUCTION TEMPs ABOVE 140 °F MAY RESULT IN EQUIPMENT DAMAGE

1-EOI-1	PAGE 1 OF 1
RPV CONTROL	
UNIT 1 BROWNS FERRY NUCLEAR PLANT	
REV: 0	

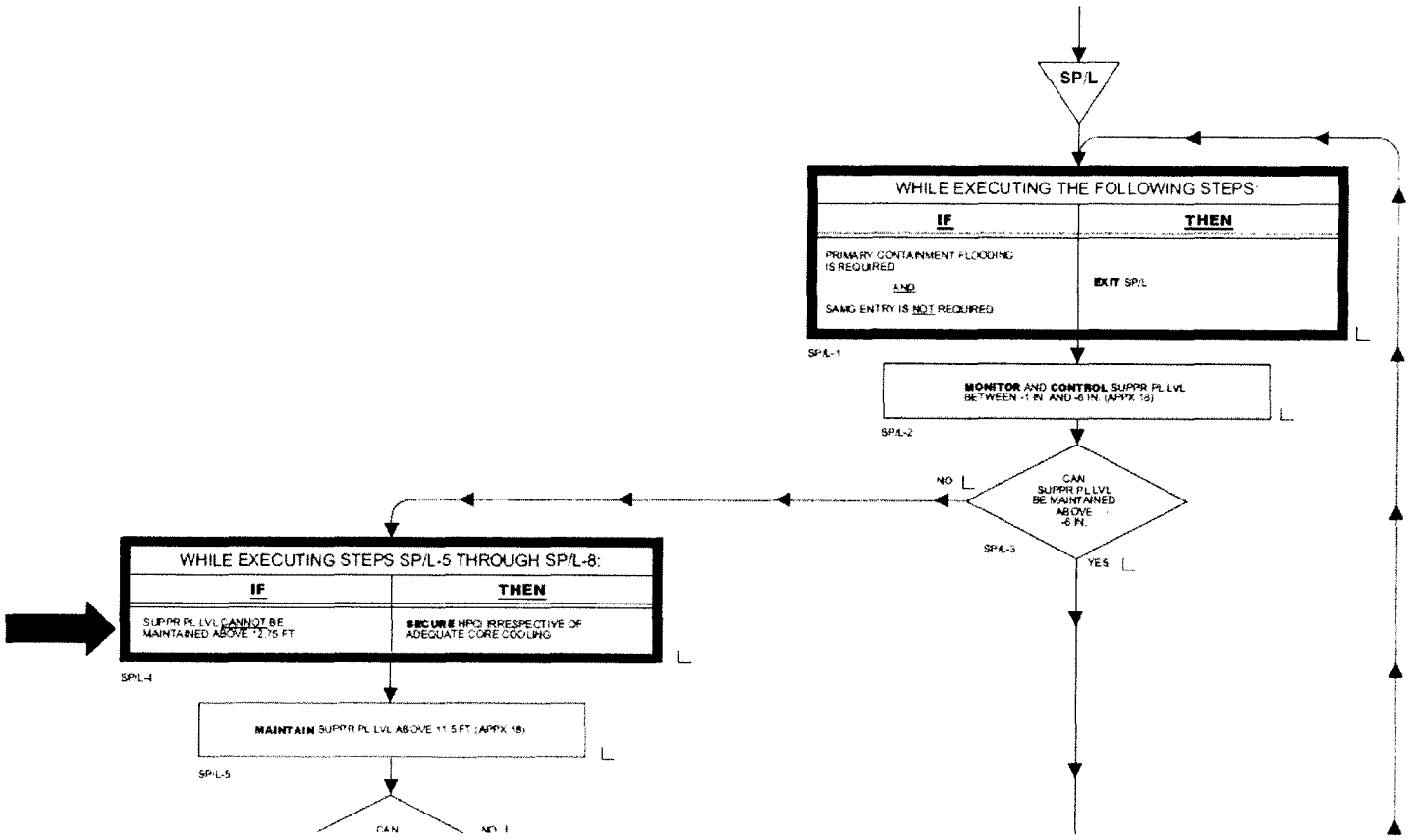

INSTRUCTOR NOTES

F. Valve Groups

The isolation valves at BFN are categorized into one of seven "groups" (1,2,3,4,5,6,8), based generally upon the type of system(s) isolated and associated isolation signals.

Group 7 was removed from PCIS long ago. These are HPCI/RCIC drain valves which close on system initiation.

Details regarding valves in each group are provided in Table 1.

A basic description of each group is as follows:

1. Group 1

Obj. V.B.2
Obj. V.C.2

This group includes the Main Steam Isolation Vavles (MSIVs), main steam line drains, and reactor water sample line isolation valves.

The signals which will initiate a Group 1 isolation are as follows:

RPV low low low level (-122" or Level 1)
*MSL High Flow ,45 sec TD (135%)
*MSL Area High Temperature (189 F)
*MSL Low Pressure (852 psig Mode Switch in RUN)

*(MSIVs and MSL Drains only)

Examination Outline Cross-reference:

295031 Reactor Low Water Level / 2

EA2.03 (10CFR 55.41.10)

Ability to determine and/or interpret the following as they apply to REACTOR LOW WATER LEVEL:

- Reactor pressure

Level	RO
Tier #	1
Group #	1
K/A #	295031EA2.03
Importance Rating	4.2

Proposed Question: **# 16**

The following plant conditions are noted on Unit 2, following a LOCA:

- Drywell Pressure is 3.5 psig and rising
- Reactor Water Level is (-) 120 inches and lowering
- Reactor Pressure is 105 psig and lowering
- 4kV Shutdown Board C is locked out

Which ONE of the following describes the approximate expected combined discharge flow for Core Spray Pumps 2A **AND** 2C based on current plant conditions?

A. 0 gpm.

B. 2400 gpm.

C. 6250 gpm.

D. 9100 gpm.

Proposed Answer: **C**

Explanation (Optional):

A INCORRECT: Plausibility based on impact of loss of 4kV Shutdown Board C. With 4 kV SD Board C locked out CS pump 2B is deenergized and 2D is interlocked to not auto start. System 2 CS flow would be 0 gpm under these conditions.

B INCORRECT: Value of 2400 gpm based on expected Min flow for Core Spray. If power loss had affected System 1 Inboard Injection Valve, Pumps would be running on Min Flow between 2200 gpm and 2600 gpm.

C **CORRECT**: Although RPV Level initiation of (-) 122 inches has not been reached, Core Spray should have auto started on Drywell Pressure > 2.5 psig with Reactor Pressure < 450 psig. Each loop of Core Spray is designed to supply 6250 gpm against head of 105 psig. The power loss does not affect 'A' and 'C' Core Spray. Pump 'A' is supplied from SD Board 'A' and Pump 'C' is supplied from SD Board 'B'. System 1 Inboard Injection Valve is power from 480 RMOV Shutdown Board 2A which is still energized by SD Board 'A'

D INCORRECT: Value of 9100 gpm is plausible and corresponds to expected flow for pump run out. For the identified plant conditions, Core Spray Pumps are not in a run out condition.

Technical Reference(s): OPL171.045 Rev 14 (Attach if not previously provided)

(Including version / revision number)

Proposed references to be provided to applicants during examination: NONE

Learning Objective: _____ (As available)

Question Source: Bank #

Modified Bank # X (Note changes or attach parent)

New

Question History: Last NRC Exam GGNS 09 # 17

(Optional - Questions validated at the facility since 10/95 will generally undergo less rigorous review by the NRC; failure to provide the information will necessitate a detailed review of every question.)

Question Cognitive Level: Memory or Fundamental Knowledge

Comprehension or Analysis X

10 CFR Part 55 Content: 55.41 X

55.43

Comments:

2. There are two independent, redundant, 100% capacity Core Spray Systems (System I - A and C pumps; System II - B and D pumps).

3. System is initiated on either: Obj. V.B.2.h Obj. V.C.1.g Obj. V.D.4 Obj. V.E.6

   a. Low-low-low water level -122", Level 1

   OR

   b. High drywell pressure (2.45 psig) in conjunction with low reactor pressure (450 psig).

e. Power supplies for all Core Spray System pump motors are shown on the following chart for Units 1, 2, and 3: Obj. V.C.2.a Obj. V.D.10.a Obj. V.E.12.a

PUMP	1A	2A	3A	1B	2B	3B	1C	2C	3C	1D	2D	3D
LOOP (SYS)	I	I	I	II	II	II	I	I	I	II	II	II
ELECT. DIV.	I	I	I	II	II	II	I	I	I	II	II	II
S/D BD.	A	A	3EA	C	C	3EC	B	B	3EB	D	D	3ED
D/G	A	A	3A	C	C	3C	B	B	3B	D	D	3D

4. Valves and Piping TP-1

a. Motor-operated valves are all AC and located outside the drywell. System I valves powered from 480V Rx MOV BD A; System II valves from B. Obj. V.B.3.b Obj. V.C.2.b

d. Each loop delivers at least 6,250 gpm against a system head corresponding to a 105 psi differential pressure between the reactor vessel and the primary containment.

GGNS 2009
QUESTION 17
A small break LOCA has occurred in the drywell and currently:

- All ECCS are operating
- Drywell pressure is 1.50 psig and rising
- RPV level is -140 inches and lowering
- RPV pressure is 450 psig

Based on these conditions, the flow indicated on FI-R600, LPCS Pump Discharge Flow, would be expected to be approximately:

A. 0 gpm

B. 1250 gpm

C. 1380 gpm

D. 7200 gpm

Answer: A

Examination Outline Cross-reference:	Level	RO
295037 SCRAM Condition Present and Power Above APRM Downscale or Unknown / 1	Tier #	1
G2.2.12 (10CFR 55.41.10)	Group #	1
Knowledge of surveillance procedures.	K/A #	295037G2.2.12
	Importance Rating	3.7

Proposed Question: **# 17**

Unit 2 was operating at 100% Reactor Power when the following series of events occurred:

- At 0200 a spurious Group 1 Isolation resulted in an ATWS with Reactor Power at 16%
- At 0205 SLC is initiated
- At 0230 SLC Storage Tank Level is at 67%
- At 0247 all control rods are fully inserted

Based on the conditions identified, which ONE of the following completes the statement?

Commence plant cooldown at __**(1)**__ **AND** in accordance with 2-SR-3.4.9.1(1), "Reactor Heatup and Cooldown Rate Monitoring," the Tech Spec limit for maximum cooldown rate is __**(2)**__ per hour.

A. **(1)** 0230
(2) 90 °F

B. **(1)** 0247
(2) 90 °F

C. **(1)** 0230
(2) 100 °F

D. **(1)** 0247
(2) 100 °F

Proposed Answer: **D**

Explanation (Optional):

A INCORRECT: part 1 = incorrect, Cooldown can not be commenced with ATWS conditions until Cold Shutdown Boron weight injected or Reactor will remain subcritical under all conditions without Boron. Plausible in that 67% SLC Storage Tank Level corresponds to the Hot Shutdown Boron Weight. Part 2 = incorrect, per SR-3.4.9.1(1) the maximum cooldown rate is 100° F/hr. The 90° F/hr is recognizable as the administrative cooldown rate limit.

B INCORRECT: part 1 = correct. With all control rods inserted, 2-EOI-1 directs depressurizing the Reactor below the Shutdown Cooling Pressure interlock. Part 2 = incorrect, as explained above.

C INCORRECT: part 1 = incorrect, as explained above. Part 2 = correct, per SR-3.4.9.1(1) the maximum cooldown rate is 100° F/hr.

D **CORRECT:** part 1 = correct, With all control rods inserted, 2-EOI-1 directs depressurizing the Reactor below the Shutdown Cooling Pressure interlock. Part 2 = correct, per SR-3.4.9.1(1), "Reactor Heatup and Cooldown Rate Monitoring," the maximum cooldown rate is 100° F/hr.

Technical Reference(s): 2-EOI-1 Rev 12 / 2-GOI-100-12A Rev 88 (Attach if not previously provided)

2-SR-3.4.9.1(1) Rev 17 (Including version / revision number)

Proposed references to be provided to applicants during examination: NONE

Learning Objective: _____ (As available)

Question Source: Bank # _____ Modified Bank # _____ (Note changes or attach parent)

New X

Question History: Last NRC Exam _____

(Optional - Questions validated at the facility since 10/95 will generally undergo less rigorous review by the NRC; failure to provide the information will necessitate a detailed review of every question.)

Question Cognitive Level: Memory or Fundamental Knowledge

Comprehension or Analysis X

10 CFR Part 55 Content: 55.41 X

55.43

Comments: Reviewed Revision 18 to 2-SR-3.4.9.1(1) which had no impact on the question.

BFN Unit 2	Reactor Heatup and Cooldown Rate Monitoring	2-SR-3.4.9.1(1) Rev. 0017 Page 4 of 18

1.0 INTRODUCTION

1.1 Purpose

This Surveillance Procedure is performed to ensure the operating limits on the Reactor Vessel Pressure and Temperature, during Reactor Coolant System (RCS) Heatup or Cooldown Operations with the Reactor critical, are satisfied within the limits specified in Figure 3.4.9-1, Curves #1 and #2. 2-SR-3.4.9.1(2) will be used to ensure these requirements during In-Service Hydrostatic or Leak Testing. The average rate of Reactor Coolant Temperature change is required to **NOT** exceed 100 degrees F per hour whenever averaged over a one-hour period and RCS pressure and temperature is required to be within the limits specified in Figure 3.4.9-1, Curve #3.

1.2 Scope

This procedure fully implements the requirements of Technical Specification (TS) Surveillance Requirement (SR) 3.4.9.1.b and 3.4.9.2 for Heatup and Cooldown, and Figure 3.4.9-1, (Curves #2 and #3). TS requirements for RCS In-Service Hydrostatic or Leak Testing are covered by 2-SR-3.4.9.1(2).

5.0 **INSTRUCTION STEPS (continued)**

CAUTION

[NER/C] To prevent inadvertent criticality, forced Reactor cooldown is allowed only after all control rods are fully inserted, unless directed by 2-EOI-1 Flowchart, RPV Control. [INPO SER 91-024, SER 92-008, NRC IEN 92-39]

NOTE

During Reactor Cooldown, the optimum rate is 20°F every 15 minutes. This will ensure the administrative limit of 90°F/Hr is not exceeded. Attempts to "makeup" for time intervals which fall short of 20°F SHALL not be made. If the 20°F is exceeded in any 15 minute period, subtract the amount of cooldown rate over 20°F from the 20°F for the next 15 minute period. These guidelines will assist in achieving a target cooldown rate of 80°F and ensure the administrative limit of 90°F is not exceeded. Maximizing the plant cooldown rate is recommended to limit radioactive contamination buildup on out-of-core surfaces.

[14] **INITIATE** 2-SR-3.4.9.1(1), Reactor Heatup and Cooldown rate Monitoring, using a licensed Unit Operator at least 15 minutes prior to Reactor Coolant temperature reduction. (N/A this step if no cooldown is anticipated due to Reactor remaining at power during short-term maintenance.)

(R) _____ _____ _____
Initials Date Time

[15] **IF** a normal controlled shutdown is to be performed, **THEN**

CONTINUE this procedure at Step 5.0[17]. (Otherwise N/A)

_____ _____ _____
Initials Date Time

1

WHEN THE REACTOR WILL REMAIN SUBCRITICAL WITHOUT BORON UNDER ALL CONDITIONS (SEE NOTE)

OR

SLC HAS INJECTED INTO THE RPV TO A TANK LVL OF 43%

OR

THE RX IS SUBCRITICAL AND NO BORON HAS BEEN INJECTED INTO THE RPV.

THEN **CONTINUE**

RC/P-13

CAUTION

#3 ELEVATED SUPPR CHMBR PRESS MAY TRIP RCIC

#6 HPCI OR RCIC SUCTION TEMP ABOVE 140 °F

DEPRESSURIZE THE RPV BELOW THE SHUTDOWN COOLING RPV PRESS INTERLOCK WITH ONE OR MORE OF THE FOLLOWING DEPRESSURIZATION SYSTEMS. **MAINTAIN** COOLDOWN RATE BELOW 100 °F/HR.

DEPRESSURIZATION SYSTEM	APPX
MAIN TURB BYPASS VLVs IF THE MAIN CONDENSER IS AVAILABLE (USE APPX TO OPEN MSIVs)	8B
MSRVs ONLY WHEN SUPPR LVL IS ABOVE 5.5 FT IF ..... "MAIN STEAM RELIEF VLV AIR ACCUM PRESS LOW" ANNUNCIATOR (XA-55-3D-18) IS IN ALARM, THEN... **MINIMIZE** MSRV CYCLING BY USING SUSTAINED OPENING FOR DEPRESSURIZATION	11A
HPCI, WITH CST SUCTION IF POSSIBLE	11C
RCIC, WITH CST SUCTION IF POSSIBLE	11B
RFPTs ON MIN FLOW	11F
MAIN STEAM SYSTEM DRAINS	11D

Examination Outline Cross-reference:

295038 High Off-site Release Rate / 9

EK1.03 (10CFR 55.41.10)

Knowledge of the operational implications of the following concepts as they apply to HIGH OFF-SITE RELEASE RATE:

- Meteorological effects on off-site release

Level	RO
Tier #	1
Group #	1
K/A #	295038EK1.03
Importance Rating	2.8

Proposed Question: **# 18**

The Unit 2 Control Room Operator is asked to gather Meteorological data based on a General Emergency classification entry on a WRGERMS reading. He reports that the 91 meter wind direction is 120° **AND** the 46 meter wind direction is 115°.

Which ONE of the following completes the statement in accordance with EPIP-5,"General Emergency"?

Based on the above information, the __**(1)**__ meter data is used for the release **AND** the wind direction means that the wind is __**(2)**__ that direction.

A. **(1)** 91
(2) blowing from

B. **(1)** 46
(2) blowing from

C. **(1)** 91
(2) blowing towards

D. **(1)** 46
(2) blowing towards

Proposed Answer: **A**

Explanation (Optional):

A **CORRECT**: Part 1= correct, Per EPIP-5, attachment A Met data is collected from the 91 meter point. This is a stack release. (WRGERMS = stack) Part 2 = correct - Per EPIP-5, Attachment A, wind **"from"** is correct.

B INCORRECT: Part 1 = incorrect as detailed above. Part 2 = correct as detailed above.

C INCORRECT: Part 1 = correct as explained above. Part 2 = incorrect. Plausible in that the candidate could assume the opposite.

D INCORRECT: Parts 1 and 2 both = incorrect and plausible as explained above.

Technical Reference(s): EPIP-15 Rev 38, EPIP-1 Rev 44 (Attach if not previously provided)

OPL171.033 Rev 12 (Including version / revision number)

Proposed references to be provided to applicants during examination: NONE

Learning Objective: V.B.5 (As available)

Question Source: Bank # ____ Modified Bank # ____ (Note changes or attach parent)

New X

Question History: Last NRC Exam ____

(Optional - Questions validated at the facility since 10/95 will generally undergo less rigorous review by the NRC; failure to provide the information will necessitate a detailed review of every question.)

Question Cognitive Level: Memory or Fundamental Knowledge

Comprehension or Analysis X

10 CFR Part 55 Content: 55.41 X

55.43

Comments:

BROWNS FERRY	EMERGENCY CLASSIFICATION PROCEDURE EVENT CLASSIFICATION MATRIX	EPIP-1

CURVES/TABLES:

Table 4.1-U
RELEASE LIMITS FOR UNUSUAL EVENT

TYPE	MONITORING METHOD	LIMIT	DURATION
Gaseous Release Rate	Stack Noble Gas (WRGERMS)	2.88×10^{7} µCi/sec	1 Hour
Gaseous Release Rate	0-SI 4.8.B.1.a.1	Release Fraction 2.0	1 Hour
Site Boundary Radiation Reading	Field Assessment Team	0.10 MREM/HR Gamma	1 Hour

Table 4.1-A
RELEASE LIMITS FOR ALERT

TYPE	MONITORING METHOD	LIMIT	DURATION
Gaseous Release Rate	Stack Noble Gas (WRGERMS)	2.88×10^{9} µCi/sec	15 Minutes
Gaseous Release Rate	0-SI 4.8.B.1.a.1	Release Fraction 200	15 Minutes
Site Boundary Radiation Reading	Field Assessment Team	10 MREM/HR Gamma	15 Minutes

Table 4.1-S
RELEASE LIMITS FOR SITE AREA EMERGENCY

TYPE	MONITORING METHOD	LIMIT	DURATION
Gaseous Release Rate	Stack Noble Gas (WRGERMS)	5.9×10^{9} µCi/sec	15 Minutes
Site Boundary Radiation Reading	Field Assessment Team	100 MREM/HR Gamma	1 Hour
Site Boundary Iodine-131	Field Assessment Team	3.9×10^{-7} µCi/cm^3	1 Hour

Table 4.1-G
RELEASE LIMITS FOR GENERAL EMERGENCY

TYPE	MONITORING METHOD	LIMIT	DURATION
Gaseous Release Rate	Stack Noble Gas (WRGERMS)	5.9×10^{10} µCi/sec	15 Minutes
Site Boundary Radiation Reading	Field Assessment Team	1000 MREM/HR Gamma	1 Hour
Site Boundary Iodine-131	Field Assessment Team	3.9×10^{-6} µCi/cm^3	1 Hour

BROWNS FERRY	GENERAL EMERGENCY	EPIP-5

APPENDIX A
Page 1 of 1
GENERAL EMERGENCY INITIAL NOTIFICATION FORM

1. ☐ This is a Drill ☐ This is an Actual Event - Repeat - This is an Actual Event

2. This is _____, **Browns Ferry** has declared a **GENERAL EMERGENCY**
affecting: ☐ Unit 1 ☐ Unit 2 ☐ Unit 3 ☐ Common

3. **EAL Designator(s):** _____

4. **Brief Description of the Event:** _____
_____
_____

5. **Radiological Conditions:** (Check one under both Airborne and Liquid column.)

Airborne Releases Offsite	Liquid Releases Offsite
☐ Minor releases within federally approved limits[1]	☐ Minor releases within federally approved limits[1]
☐ Releases above federally approved limits[1]	☐ Releases above federally approved limits[1]
☐ Release information not known	☐ Release information not known
([1]Tech Specs)	([1]Tech Specs)

6. **Event Declared:** Time: _____Central Time Date: _____

7. **The Meteorological Conditions are:** (Use 91 meter data from the Met Tower)

Wind Direction is FROM: _____degrees Wind Speed: _____ m.p.h

8. **Provide Protective Action Recommendation:** Check either 1 or 2 or 3.

☐ **Recommendation 1** • EVACUATE LISTED SECTORS (2 mile Radius & 10 miles downwind) • Shelter remainder of 10 mile EPZ. • Consider issuance of POTASSIUM IODINE in accordance with the State Plan.	REC 1	WIND FROM DEGREES (Mark wind direction from Step 7)	REC 2	☐ **Recommendation 2** • EVACUATE LISTED SECTORS (2 mile radius & 5 mile downwind) • SHELTER remainder of 10 mile EPZ. • Consider issuance of POTASSIUM IODIDE in accordance with the State Plan.
A-2, B-2, F-2, G-2, **E**-5, -10, **F**-5, -10, **G**-5, -10		4 - 40		A-2, B-2, F-2, G-2, E-5, F-5, G-5
A-2, B-2, F-2, G-2, **F**-5, -10, **G**-5, -10, H-10		41- 73		A-2, B-2, F-2, G-2, F-5, G-5
A-2, B-2, F-2, G-2, **G**-5, -10, H-10, I-10		74 - 92		A-2, B-2, F-2, G-2, G-5
A-2, B-2, F-2, G-2, A-5, G-5, H-10, I-10, J-10,K-10		93 - 137		A-2, B-2, F-2, G-2, A-5, G-5
A-2, B-2, F-2, G-2, **A**-5, -10, I-10, J-10, K-10		138 - 203		A-2, B-2, F-2, G-2, A-5
A-2, B-2, F-2, G-2, **A**-5, -10, **B**-5, -10		204 - 282		A-2, B-2, F-2, G-2, A-5, B-5
A-2, B-2, F-2, G-2, **B**-5, -10, C-10, D-10, **E**-5, -10		283 - 326		A-2, B-2, F-2, G-2, B-5, E-5
A-2, B-2, F-2, G-2, C-10, D-10, **E**-5,-10, **F**-5,-10		327 - 3		A-2, B-2, F-2, G-2, E-5, F-5

☐ **Recommendation 3**
- SHELTER all sectors
- CONSIDER issuance of Potassium Iodide in accordance with the State Plan.

9. Please repeat the information you have received to ensure accuracy.

Action: When completed, fax this appendix as prescribed by procedure.

9.	Stack-Gas Radiation Monitoring System (Wide Range Gaseous Effluent [WRGERMS])	Obj. V.B.3.l Obj. V.C.3.l
	a. Purposes	Installed after the Three Mile Island accident
	(1) Provides the ability to monitor releases that could occur as a result of an accident	Controls/indications on Unit-2 only HP Qualify-validate-verify
	(2) The objectives of this stack-gas radiation monitoring system are twofold:	
	(a) Indicate and record release rates from the stack during normal operation and alarm when limits are reached	Obj. V.B.1,3 Obj. V.C.1,3 Obj.V.D.8
	(b) Indicate and record release rates from the stack during accident conditions which could result in gross radiation release	

Examination Outline Cross-reference:

600000 Plant Fire On Site / 8

AK3.04 (10CFR 55.41.5 / 10)

Knowledge of the reasons for the following responses as they apply to PLANT FIRE ON SITE:

- Actions contained in the abnormal procedure for plant fire on site

Level	RO
Tier #	1
Group #	1
K/A #	600000AK3.04
Importance Rating	2.8

Proposed Question: **# 19**

Which ONE of the following completes the statement?

Per 0-AOI-26-1, "Fire Response," when directed by the Unit Supervisor, Assistant Unit Operators (AUOs) are notified to report to their assigned Control Room **AND** all other AUOs report to the__**(1)**__ to __**(2)**__.

A. **(1)** Operations Field Office
(2) be available to support fire fighting activities.

B. **(1)** Unit 2 Main Control Room
(2) be available to support fire fighting activities.

C. **(1)** Operations Field Office
(2) ensure SSI manual actions can be completed within required time.

D. **(1)** Unit 2 Main Control Room
(2) ensure SSI manual actions can be completed within required time.

Proposed Answer: **D**

Explanation (Optional):

A INCORRECT: Part 1 incorrect - Per 0-AOI-26-1, "Fire Response," Assistant Unit Operators (AUOs) report to their assigned Control Room and all other AUOs report to Unit 2 MCR. Part 2 incorrect – although AUO can be used to support fire fighting activities once SSI actions are assured, the reason for reporting as detailed is to ensure SSI manual actions can be completed within required time.

B INCORRECT: Part 1 correct – Unassigned AUOs report to Unit 2 MCR. Part 2 incorrect as explained above.

C INCORRECT: Part 1 incorrect as explained above. Part 2 correct - the reason for reporting to specified CR is to ensure SSI manual actions can be completed within required time.

D **CORRECT:** Part 1 correct – Per 0-AOI-26-1, "Fire Response," Assistant Unit Operators (AUOs) report to their assigned Control Room and all other AUOs report to Unit 2 MCR. Part 2 correct - Per 0-AOI-26-1, "Fire Response," the reason for reporting to specified CR is to ensure SSI manual actions can be completed within required time.

Technical Reference(s): 0-AOI-26-1 Rev 11 (Attach if not previously provided)

(Including version / revision number)

Proposed references to be provided to applicants during examination: NONE

Learning Objective: _____ (As available)

Question Source: Bank # / Modified Bank # (Note changes or attach parent)

New X

Question History: Last NRC Exam

(Optional - Questions validated at the facility since 10/95 will generally undergo less rigorous review by the NRC; failure to provide the information will necessitate a detailed review of every question.)

Question Cognitive Level: Memory or Fundamental Knowledge X

Comprehension or Analysis

10 CFR Part 55 Content: 55.41 X

55.43

Comments:

BFN Unit 0	Fire Response	0-AOI-26-1 Rev. 0011 Page 6 of 32

4.2 Subsequent Actions (continued)

NOTES

1) The Shift Manager will remain in communication with the Incident Commander and reference 0-SSI-001 for applicability based on the severity of the fire.
2) Each Safe Shutdown Instruction contains illustrations which depict the credited plant/unit eqipment and instrumentation for that specific Fire Area.
3) The AUOs are assembled in the Control Rooms to ensure SSI manual actions can be completed within the required time.

[4] **IF** directed by the Unit Supervisor, **THEN**

PERFORM the following:

[4.1] **NOTIFY** AUOs to report to their assigned Control Room(s), all other AUOs will report to Unit 2 MCR. ☐

Examination Outline Cross-reference:

700000 Generator Voltage and Electric Grid Disturbances / 6

AK1.01 (10CFR 55.41.5)

Knowledge of the operational implications of the following concepts as they apply to GENERATOR VOLTAGE AND ELECTRIC GRID DISTURBANCES:

- Definition of terms: volts, watts, amps, VARs, power factor

Level	RO
Tier #	1
Group #	1
K/A #	700000AK1.01
Importance Rating	3.3

Proposed Question: **# 20**

Unit 3 is operating at 100% Reactor Power when an indication of grid instability occurs resulting in Loss of Offsite Power.

Diesel Generator 3A is carrying 4kV Shutdown Board 3EA.

Which ONE of the following will **INCREASE** when the Diesel Generator Governor Control Switch is placed in the **RAISE** position?

A. Frequency.

B. Megawatts.

C. MVARS.

D. Voltage.

Proposed Answer: **A**

Explanation (Optional):

A **CORRECT**: This answer is correct because with the diesel operating alone the engine speed control will change the speed of the engine and thereby change the operating frequency of the generator.

B INCORRECT: This answer is incorrect because with the diesel operating alone the MW loading is strictly a function of the loads operating on the bus and raising speed will have no affect on the operating loads. If the D/G was running in parallel operation, this would be the correct answer.

C INCORRECT: This answer is incorrect because with the diesel operating alone the MVAR loading is strictly a function of the types of loads operating on the bus and raising speed will have no affect on the operating loads. If the D/G was running in parallel operation and the Voltage Regulator adjusted, MVARS would be affected.

D INCORRECT: This answer is incorrect because operating the engine speed control will have no affect on generator voltage. If Voltage Regulator adjusted with D/G carrying the bus, Voltage would be affected.

Technical Reference(s): OPL171.036 Rev 11 (Attach if not previously provided)

(Including version / revision number)

Proposed references to be provided to applicants during examination: NONE

Learning Objective: _____ (As available)

Question Source: Bank # X

Modified Bank # _____ (Note changes or attach parent)

New

Question History: Last NRC Exam GGNS 09 #46

(Optional - Questions validated at the facility since 10/95 will generally undergo less rigorous review by the NRC; failure to provide the information will necessitate a detailed review of every question.)

Question Cognitive Level: Memory or Fundamental Knowledge

Comprehension or Analysis X

10 CFR Part 55 Content: 55.41 X

55.43

Comments:

b. There are two possible 4kV supplies to each U3 Shutdown Board:

Board	NORMAL Supply
3EA	Unit Board 3A
3EB	Unit Board 3A
3EC	Unit Board 3B
3ED	Unit Board 3B

(1) The first alternate is from the diesel generators. The U1/2 diesel generators cannot supply power to the U3 Shutdown Boards alone. They may, however, be paralleled with the U3 diesel generators for backfeed operation. The tie breaker off the unit 3 Shutdown Board is interlocked as follows:

GGNS 2009

Question 46

The Division 3 Diesel Generator (DG) is carrying the Division 3 electrical distribution system following a loss of off-site power.

Placing the DG speed control switch in the RAISE position will cause generator _____ to rise.

A. MW

B. MVARS

C. voltage

D. frequency

Answer: D

Explanation:

A. This answer is incorrect because with the diesel operating alone the MW loading is strictly a function of the loads operating on the bus and raising speed will have no affect on the operating loads.

B. This answer is incorrect because with the diesel operating alone the MVAR loading is strictly a function of the types of loads operating on the bus and raising speed will have no affect on the operating loads.

C. This answer is incorrect because operating the engine speed control will have no affect on generator voltage.

D. This answer is correct because with the diesel operating alone the engine speed control will change the speed of the engine and thereby change the operating frequency of the generator.

Examination Outline Cross-reference:

295009 Low Reactor Water Level / 2

AK2.04 (10CFR 55.41.7)

Knowledge of the interrelations between LOW REACTOR WATER LEVEL and the following:

- Reactor water cleanup

Level	RO
Tier #	1
Group #	2
K/A #	295009AK2.04
Importance Rating	2.6

Proposed Question: **# 21**

Unit 1 is at 100% Reactor Power when a failure of the Reactor Feed Water Control System results in a Reactor Scram on Reactor Water Low Level.

Given that RWCU was in normal operation prior to the Scram, which ONE of the following describes the status of RWCU Pumps following the Scram?

A. In a normal operating lineup.

B. Tripped due to System flow less than 56 gpm.

C. Tripped due to Pump Cooling Water Temp high 140 °F.

D. Tripped due to ISOLATION VALVES, 1-FCV-69-1 **AND** 1-FCV-69-2 closing.

Proposed Answer: **D**

Explanation (Optional):

A INCORRECT: RWCU will receive an Isolation Signal on level 3. When Isolation Valves 1-FCV-69-1/2 are not full open, the RWCU Pumps get a direct trip without time delay. Plausible in that if the candidate fails to recognize that Level 3 was reached or if Isolation occurred at Level 2, this would be the correct answer.

B INCORRECT: System Low Flow Trip of 56 gpm has a time delay of 30 seconds. Also with the Isolation Trip coming with valves just off full open, they would cause the trip prior to low flow condition.

C INCORRECT: Low flow condition would result in elevated pump temperatures and subsequent increase in Pump Cooling Water Temps if trip associated with isolation or System Low Flow did not occur.

D **CORRECT:** Reactor Scram on low level indicates Reactor Level dropped less than (+) 2 inches. RWCU receives an Isolation Signal at this level. With the Isolation Signal, closure of ISOLATION VALVES, 1-FCV-69-1/2 and RETURN ISOLATION VALVE, 1-FCV-69-12 will occur. When ISOLATION VALVES, 1-FCV-69-1/2 are not full open, RWCU Pumps get a direct trip.

Technical Reference(s): OPL171.013 Rev 18 (Attach if not previously provided)

(Including version / revision number)

Proposed references to be provided to applicants during examination: NONE

Learning Objective: _____ (As available)

Question Source: Bank # _____

Modified Bank # _____ (Note changes or attach parent)

New X

Question History: Last NRC Exam _____

(Optional - Questions validated at the facility since 10/95 will generally undergo less rigorous review by the NRC; failure to provide the information will necessitate a detailed review of every question.)

Question Cognitive Level: Memory or Fundamental Knowledge

Comprehension or Analysis X

10 CFR Part 55 Content: 55.41 X

55.43

Comments:

OPL171.013
Revision 18
Page 27 of 47

5. Significant Interlocks and Trip Logic — Obj. V.B.3; V.D.4 Obj. V.C.3; V.D.5

a. System isolation (closure of the inboard and outboard inlet isolation valves FCV 69-1 and 69-2 and the return isolation valve FCV 69-12) will occur on any of the following signals or conditions. — Obj. V.B.5; V.E.8 Obj. V.C.4; V.E.9 Note: 69-12 closes on isol. Signal but is not a PCIS valve.

(1) Low reactor water level (level 3) to protect the core in case of a break in RWCU System piping or equipment. One-out-of-two taken twice logic. — "Level 3" is Tech Spec terminology (>528" above vessel zero). Also, stated as 0" indicated level.

Note: Tech Specs low level setpoint ≥0". Current actual setpoint is still +2". — LT-3-203A thru D

(RWCU) isolation.

b.	RWCU Recirc Pumps Trips		Obj. V.B.5 Obj. V.D.6 Obj. V.E.10
	(1)	RWCU isolation valve FCV 69-1or 2 not full open.	
	(2)	RWCU return isolation valve FCV 69-12 full closed.	**UNIT DIFFERENCE** TACF 2-08-001-069 disables 2B pump trip on
	(3)	Pump flow 56 gpm for 30 seconds with the control switch in NORMAL-AFTER-START position.	2-FCV-69-12 closure
	(4)	Pump cooling water outlet high temperature (RBCCW) 140°F after a 30-second time delay, if the control switch is in the NORMAL-AFTER-START position.	Right unit/train/ component
	(5)	480V Load Shed Logic	

Examination Outline Cross-reference:

295010 High Drywell Pressure / 5

G2.4.49 (10CFR 55.41.10)

Ability to perform without reference to procedures those actions that require immediate operation of system components and controls.

Level	RO
Tier #	1
Group #	2
K/A #	295010G2.4.49
Importance Rating	4.6

Proposed Question: **# 22**

Given the following conditions on Unit 3:

- Reactor Water Level is currently (+) 28 inches and stable
- HPCI has just received a **VALID** initiation signal
- Reactor Power is currently 100%

Which ONE of the following identifies the required **IMMEDIATE** operator action(s)?

A. Verify by two independent means that HPCI is **NOT** required for level control **AND** insert an Upper Power Runback to offset the impending power excursion. A manual Scram is **NOT** required.

B. Depress Reactor Scram pushbuttons **AND** pause the REACTOR MODE SWITCH in the REFUEL position momentarily on the way to the SHUTDOWN position.

C. Depress Reactor Scram pushbuttons **AND** pause the REACTOR MODE SWITCH in the START & HOT STBY position for five seconds, on the way to the SHUTDOWN position.

D. Verify first that HPCI System has responded properly to the initiation signal **AND** then take prompt actions to place the HPCI FLOW CONTROLLER in MANUAL per OPDP-1, "Conduct of Operations." A manual Scram is **NOT** required.

Proposed Answer: **B**

Explanation (Optional):

A INCORRECT: While NOT a specified Immediate Action in a procedure, as we do NOT currently have an "Inadvertent HPCI Initiation" procedure; these are actions consistent with training provided to License Candidates in the Simulator portion of their training; and these are the Immediate Actions we would take for an inadvertent HPCI initiation. Difficulty is compounded by the fact that reactor water level is in the normal range. A manual Scram is required, based on a valid HPCI signal (2.45#).

B **CORRECT**: The key in the stem is to pick up on the fact that HPCI has received a **valid** initiation signal. This, taken in context with the given level of +28 inches, only leaves High Drywell Pressure as the cause. Candidate must now determine from the remaining bullet concerning Rx Power that a scram should have occurred, but didn't. Thus, the appropriate action is to insert a Manual Scram and take the Immediate Actions of 3-AOI-100-1, which specifically include both of the actions in the answer (see procedure excerpt).

C INCORRECT: Up to the point of inserting the Manual Scram, this question is correct. Although specified as an Immediate Action in 3-AOI-100-1, the OATC would only pause in START HOT STBY position for 5 seconds if the scram was due to a loss of RPS. The remainder of the distractor is correct. (see procedure excerpt).

D INCORRECT: This is a common misinterpretation of procedural requirements, as applied in the simulator, NOT only in Licensed Operator Requal Training, but also in Initial License Training. A modified screen capture of the applicable OPDP-1 procedure section is attached – modified in the sense that the actual procedure rolls over a page break, which I consolidated into one section. The first action is a prudent operator responsibility which would be correct in any case. Placing the HPCI Flow Controller in MANUAL would not be warranted in this case per OPDP-1 requirements; although it would be a prudent choice also from a PRA Risk-Significant Operator Actions standpoint. A manual Scram is required, based on a valid HPCI signal (2.45#).

Technical Reference(s): 3-AOI-100-1 Rev 49, OPDP-1 Rev 12 (Attach if not previously provided)

OPL171.042 Rev 19 (Including version / revision number)

Proposed references to be provided to applicants during examination: NONE

Learning Objective: V.B.2 / V.B.3 / V.B.10 (As available)

Question Source: Bank # ____ Modified Bank # ____ (Note changes or attach parent)

New X

Question History: Last NRC Exam ____

(Optional - Questions validated at the facility since 10/95 will generally undergo less rigorous review by the NRC; failure to provide the information will necessitate a detailed review of every question.)

Question Cognitive Level: Memory or Fundamental Knowledge

Comprehension or Analysis X

10 CFR Part 55 Content: 55.41 X

55.43

Comments:

BFN Unit 3	Reactor Scram	3-AOI-100-1 Rev. 0049 Page 6 of 62

4.0 OPERATOR ACTIONS

NOTES

1) If necessary, place keeping marks may be made directly in the Control Room copy of this instruction. Management Services should be contacted for a replacement copy when time permits.
2) Unless otherwise listed, all panels referenced are on Unit 3.

4.1 Immediate Actions

[1] **DEPRESS** REACTOR SCRAM A and B, 3-HS-99-5A/S3A and 3-HS-99-5A/S3B, on Panel 3-9-5. ☐

[2] **IF** scram is due to a loss of RPS, **THEN** (otherwise N/A)

PAUSE in START & HOT STBY mode for approximately 5 seconds before going to REFUEL. ☐

[3] **PLACE** REACTOR MODE SWITCH, 3-HS-99-5A-S1, in REFUEL, **THEN**

[3.1] **CHECK** REFUEL MODE ONE ROD PERMISSIVE light, 3-XI-85-46, illuminates. ☐

[3.2] **IF** REFUEL MODE ONE ROD PERMISSIVE light, 3-XI-85-46, is **NOT** illuminated, **THEN** (Otherwise N/A)

CHECK all control rod positions at Full-In Overtravel, or Full-In. ☐

3.4 Manual Control of Automatic Systems

A. If an automatic control is confirmed to have malfunctioned take prompt actions to place that control in manual.

B. When operating in manual mode, the Unit Supervisor will specify the frequency of monitoring, control bands and trigger values as appropriate.

C. When manual operation is no longer required or the automatic function is restored, return systems to automatic or standby mode.

D. When practical, before placing controls in manual for activities which require manual control, review system response and actions to be taken during potential off normal events.

3.5 Reactivity Management

NOTE
It is acceptable to utilize another SRO to perform the Unit Supervisor Reactivity Management function described below for significant reactivity changes such as start-up, shutdown, etc.

A. The onshift crew is responsible for the following:

1. No actions are allowed that would intentionally raise core thermal power above the licensed thermal power limit for any period of time. Small, short-term fluctuations in power that are not under the direct control of a licensed reactor operator (e.g., fluctuations caused by bi-stable flow in some boiling water reactors and secondary-side control valve oscillations for PWRs) are not considered intentional.

2. Closely monitor thermal power during steady state power operation with the goal of maintaining the one-hour thermal power average at or below the licensed thermal power limit. If the core thermal power average for a one-hour period is found to exceed the licensed thermal power limit, take prompt (typically no more than10 minutes from point of discovery) action to ensure that thermal power is less than or equal to licensed thermal power limit.

3. The core thermal power average for a shift is not to exceed the licensed thermal power limit. For the purpose of this guidance, a rolling eight-hour average is maintained.

4. For pre-planned evolutions that could affect primary or secondary temperatures, pressures, or flows; and may be expected to cause a transient increase in reactor power that could exceed the licensed thermal power limit value, prudent action based on prior performance or evaluations should be taken to reduce power prior to performing the evolution.

Examination Outline Cross-reference:

295012 High Drywell Temperature / 5

AK1.01 (10CFR 55.41.9)

Knowledge of the operational implications of the following concepts as they apply to HIGH DRYWELL TEMPERATURE:

- Pressure/temperature relationship

Level	RO
Tier #	1
Group #	2
K/A #	295012AK1.01
Importance Rating	3.3

Proposed Question: **# 23**

Which ONE of the following completes the statement?

Assuming the Drywell is at saturation conditions, the **MAXIMUM** Drywell Temperature that could possibly be achieved without exceeding the Design Drywell Pressure of 56 psig is approximately __**(1)**__. This derived temperature is __**(2)**__ the Design Drywell Temperature.

[REFERENCE PROVIDED]

A. **(1)** 268 °F
(2) below

B. **(1)** 268 °F
(2) above

C. **(1)** 303 °F
(2) below

D. **(1)** 303 °F
(2) above

Proposed Answer: **D**

Explanation (Optional):

A INCORRECT: This is incorrect because 268°F corresponds to approximately 41 psia. Plausible to the Candidate who considers the maximum drywell pressure of 56 psig and incorrectly subtracts 14.7 psi. This is also close to the value the candidate would obtain if the Candidate who considers the maximum drywell pressure of 30 psig based on approximate Maximum PSP Pressure and adds14.7 psi. The second part of the statement would be correct, if its dependency on the stem were correct (i.e., if 268 were correct)

B INCORRECT: See above for 268. The second part of this choice would also be incorrect in relation to Drywell Design Temperature of 281°F.

C INCORRECT: This is incorrect because of relationship to Drywell Design Temperature only. 303°F is the saturation temperature for approximately 70.7 psia which would be the value obtained if the candidate added 14.7 to design pressure of 56 psig. But, 303 is NOT below 281°F.

D **CORRECT**: This is correct because 303°F is the saturation temperature for approximately 70.7 psia which would be the value obtained if the candidate added 14.7 to design pressure of 56 psig. This value is above 281°F.

Technical Reference(s): OPL171.016 Rev 17 (Attach if not previously provided)

Steam Tables (Including version / revision number)

Proposed references to be provided to applicants during examination: **Steam Tables**

Learning Objective: _____ (As available)

Question Source: Bank #

Modified Bank # X (Note changes or attach parent)

New

Question History: Last NRC Exam GGNS 09 #15

(Optional - Questions validated at the facility since 10/95 will generally undergo less rigorous review by the NRC; failure to provide the information will necessitate a detailed review of every question.)

Question Cognitive Level: Memory or Fundamental Knowledge X

Comprehension or Analysis

10 CFR Part 55 Content: 55.41 X

55.43

Comments:

GGNS 2009
Question 15

Use your provided references to answer this question.

Assuming the drywell is at saturation conditions and containment remains at 0 psig, the maximum drywell temperature that can be allowed without exceeding the drywell design pressure is approximately _____ °F.

A. 215

B. 260

C. 304

D. 282

Answer: C

Explanation:

A. This is incorrect because 215°F corresponds to 15.3 psia. Plausible to the Candidate who considers the maximum drywell pressure of 30 psig and subtracts (rather than

adds) 14.7 psia to get 15.3 psia.

B. This is incorrect because i) of the discussion cited in the Explanation for Answer C, and ii) this is the maximum Drywell design differential pressure.

C. This is correct because the maximum drywell pressure is 30 psig or 44.7 psia. If the drywell is at saturation conditions, this equates to a saturation temperature of approximately 272°F.

D. This is incorrect because of the discussion cited in the Explanation for Answer C.

Deleted: 16

c. Design Specifications — Obj. V.B.2, Obj. V.C.2

(1) Drywell internal design pressure
+56 PSIG(ASME rated 62 psig, 110% of design)
-2 PSIG

(2) Drywell design temperature
281°F
Note: This is the ultimate expected temperature following a LOCA per FSAR Section 5.2.3.2 and by initiating DW Sprays prior to reaching this temp will ensure that equipment in the DW will operate when required per EOIPM, Section 0-V-D, Primary Containment Control. T.S. 3.6.1.4, Avg. DW Air temperature ≤ 150°F (Modes 1, 2 & 3)

(3) Pressure suppression chamber internal design pressure
+ 56 PSIG
- 2 PSIG

PRESSURE

$$P_{abs} = P_{atm} + P_{gauge}$$

$$P_{abs} = P_{atm} - P_{vac}$$

Where:

P_{abs} = absolute pressure (psia)
P_{atm} = atmospheric pressure (psia)
P_{gauge} = gauge pressure (psig)
P_{vac} = vacuum (psiv)

Conversion relationships for pressure:

0.491 psi = 1 in Hg

0.433 psi = 1 ft H_2O

Eq 1-10

BWR / Thermodynamics / Chapter 1 / TP 1 - 21 / Rev 4

Examination Outline Cross-reference:

295017 High Off-site Release Rate / 9

AK3.03 (10CFR 55.41.5)

Knowledge of the reasons for the following responses as they apply to HIGH OFF-SITE RELEASE RATE:

- Implementation of the site emergency plan

Level	RO
Tier #	1
Group #	2
K/A #	295017AK3.03
Importance Rating	3.3

Proposed Question: **# 24**

Which ONE of the following completes the statement?

An event in which releases are expected to exceed EPA Protective Action Guideline exposure levels beyond the site boundary is classified as a __**(1)**__. With the CECC **NOT** operational, Protective Action Recommendations (PARs) must be made by the __**(2)**__.

A. **(1)** Site Area Emergency
(2) Site Emergency Director.

B. **(1)** General Emergency
(2) Site Emergency Director.

C. **(1)** Site Area Emergency
(2) Radiation Protection Manager.

D. **(1)** General Emergency
(2) Radiation Protection Manager.

Proposed Answer: **B**

Explanation (Optional):

A INCORRECT: Part 1= incorrect - Any releases which are not expected to result in exposure levels which exceed EPA Protective Action Guideline exposure levels beyond the site boundary would constitute a Site Area Emergency. Part 2 = correct, The Site Emergency Director must make any required recommendations (PARS) until the CECC is staffed. This responsibility cannot be delegated until CECC is in operation. Recommendations are required at General Emergency.

B **CORRECT**: Part 1= correct – General Emergency is defined as an event in process or has occurred which releases can be reasonably expected to exceed EPA Protective Action Guideline exposure levels offsite for more than the immediate site area. Part 2 = correct - The Site Emergency Director must make any required recommendations (PARS) until the CECC is staffed. This responsibility cannot be delegated until CECC is in operation. Recommendations are required at General Emergency.

C INCORRECT: Part 1 and 2 = incorrect as detailed above. The Radiation Protection Manager is plausible in that his duties include assessment of site radiological conditions and recommendations for protective actions for onsite personnel.

D INCORRECT: Part 1 = correct as explained above. Part 2 = incorrect as explained above.

Technical Reference(s): EPIP-5 Rev 38 / EPIP-1 Rev 44 (Attach if not previously provided)

OPL171.075 Rev 22 (Including version / revision number)

Proposed references to be provided to applicants during examination: NONE

Learning Objective: _____ (As available)

Question Source: Bank # / Modified Bank # (Note changes or attach parent)

New X

Question History: Last NRC Exam

(Optional - Questions validated at the facility since 10/95 will generally undergo less rigorous review by the NRC; failure to provide the information will necessitate a detailed review of every question.)

Question Cognitive Level: Memory or Fundamental Knowledge X

Comprehension or Analysis

10 CFR Part 55 Content: 55.41 X

55.43

Comments:

BROWNS FERRY	GENERAL EMERGENCY	EPIP-5

NOTE

1. The ODS should be notified within 5 minutes after the emergency has been declared.
2. Completion of Appendix A for the General Emergency Classification includes the development of a Protective Action Recommendation (PAR) when the CECC is not operational. Utilize Appendix G, PAR flowchart when determining PAR, if required. PAR must be made by SM/SED.

BROWNS FERRY	EMERGENCY CLASSIFICATION PROCEDURE INTRODUCTION	EPIP-1

General Emergency: Events are in process or have occurred which involve actual or imminent substantial core degradation or melting with potential for loss of containment integrity or HOSTILE ACTION that results in an actual loss of physical control of the facility. Releases can be reasonably expected to exceed EPA Protective Action Guideline exposure levels offsite for more than the immediate site area.

OPL171.075
Revision 22

c. Site Area Emergency

Events are in process or have occurred which involve actual or likely major failures of plant functions needed for protection of the public or HOSTILE ACTION that results in intentional damage or malicious acts (1) toward site personnel or equipment that could lead to the likely failure thereof or, (2) that prevent effective access to equipment needed for the protection of the public. Any releases are not expected to result in exposure levels which exceed EPA Protective Action Guideline exposure levels beyond the site boundary.

d. General Emergency

Events are in process or have occurred which involve actual or imminent substantial core degradation or melting with potential for loss of containment integrity or HOSTILE ACTION that results in an actual loss of physical control of the facility. Releases can be reasonably expected to exceed EPA Protective Action Guideline exposure levels offsite for more than the immediate site area.

G.	General Emergency, EPIP-5	Refer to EPIP-5
1.	Notification Requirements based on Emergency Centers Staffed or Not Staffed.	
2.	This classification initiates predetermined protective action for the public, provides continuous assessment of information, and initiates additional measures as required by releases of radioactivity.	Conservative decision making
3.	EPIP-5 contains the directions for activating the emergency response for the General Emergency and the guidance for making protective action recommendations.	Review: EPIP-5 Attachment C for PARs

4. The Site Emergency Director must make any required recommendations until the CECC is staffed. This responsibility cannot be delegated until CECC is in operation. Recommendations are required at General Emergency. Obj. V.B.7

APPENDIX G

Protective Action Recommendation Flowchart

PROTECTIVE ACTION RECOMMENDATIONS

Note 1: If conditions are unknown utilizing the flowchart, then answer NO.
Note 2: A short term release is defined as "a release that does not exceed a 15 minute duration".

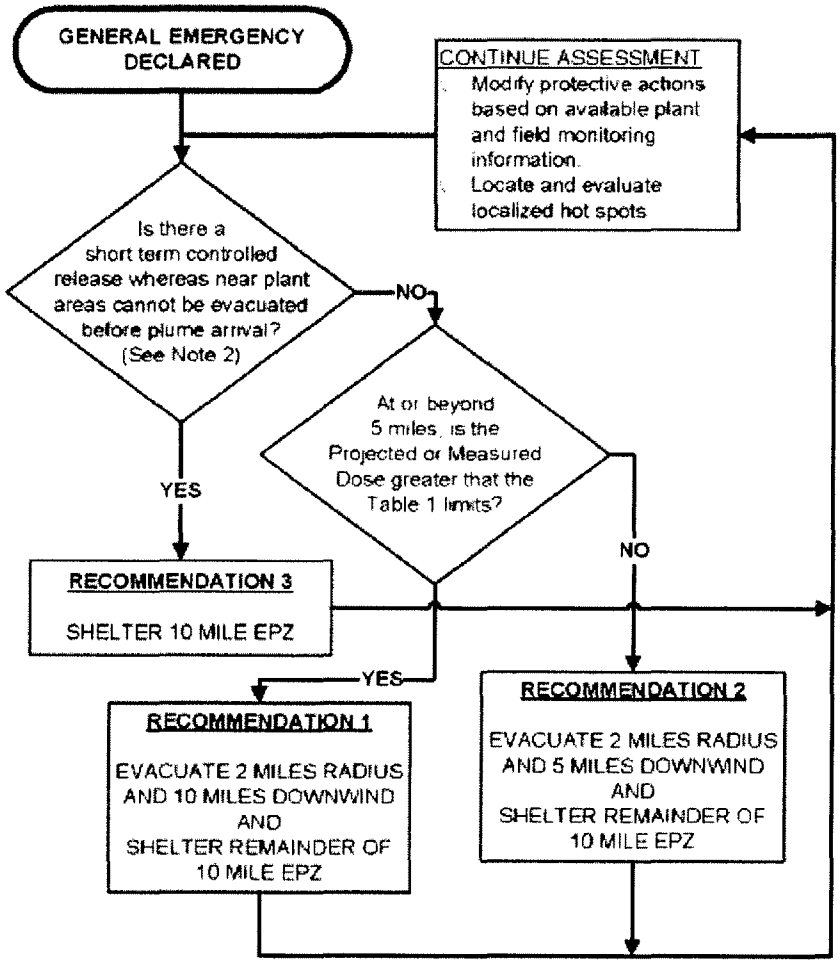

TABLE 1 Protective Action Guides	
TYPE	LIMIT
Measured	3.9E-6 micro Ci/cc of Iodine 131 or 1 REM/hr External Dose
Projected	1 REM TEDE or 5 REM Thyroid CDE

Examination Outline Cross-reference:

295022 Loss of CRD Pumps / 1

AA2.03 (10CFR 55.41.10)

Ability to determine and/or interpret the following as they apply to LOSS OF CRD PUMPS:

- CRD mechanism temperatures

Level	RO
Tier #	1
Group #	2
K/A #	295022AA2.03
Importance Rating	3.1

Proposed Question: **# 25**

Unit 2 is operating at 100% Reactor Power, when the following plant conditions are observed:

- CRD PUMP A SUCT PRESSURE LOW, (2-9-5A, Window 2), is in alarm
- CONTROL ROD DRIVE UNIT HIGH TEMP, (2-9-5A, Window 17), is in alarm

(ASSUME NO OPERATOR ACTIONS)

Concerning the effects of high CRD mechanism temperatures, which ONE of the following completes the statement?

IMMEDIATELY declare _____.

A. **ALL** Control Rods SLOW, due to the effect on insertion times.

B. **ALL** Control Rods INOPERABLE, due to the effect on insertion times.

C. **ONLY** Control Rods with temperatures > 350 °F SLOW, due to the effect on Scram times.

D. **ONLY** Control Rods with temperatures > 400 °F INOPERABLE, due to the effect on Scram times.

Proposed Answer: **C**

Explanation (Optional):

A INCORRECT: Per T.S. 3.1.4 Bases, temperatures are permitted to rise to 350 °F prior to affecting Scram times. Then they would be declared SLOW per note 1 of T.S. 3.1.4 -1 table. The candidate must determine that no CRD pump is operating based on indications given. Thus normal drive / insertion is not applicable.

B INCORRECT: Per T.S. 3.1.4 Bases, temperatures are permitted to rise to 350 °F prior to affecting Scram times. Then they would be declared SLOW per note 1 of T.S. 3.1.4 -1 table. The candidate must determine that no CRD pump is operating based on indications given. Thus normal drive / insertion is not applicable.

C **CORRECT:** Per T.S. 3.1.4 Bases, temperatures are permitted to rise to 350 °F prior to affecting Scram times. Then they would be declared SLOW per note 1 of T.S. 3.1.4 -1 table.

D INCORRECT: Per T.S. 3.1.4 Bases, temperatures are permitted to rise to 350 °F prior to affecting Scram times. Then they would be declared SLOW per note 1 of T.S. 3.1.4 -1 table. The T.S. does allow to conservatively declare the rods INOPERABLE vs: SLOW, but the temperature is 350 not 400.

Technical Reference(s): Tech Spec 3.1.4 (Attach if not previously provided)

ARP 2-9-5A Rev 43 (Including version / revision number)

Proposed references to be provided to applicants during examination: NONE

Learning Objective: _____ (As available)

Question Source: Bank # _____

Modified Bank # _____ (Note changes or attach parent)

New X

Question History: Last NRC Exam _____

(Optional - Questions validated at the facility since 10/95 will generally undergo less rigorous review by the NRC; failure to provide the information will necessitate a detailed review of every question.)

Question Cognitive Level: Memory or Fundamental Knowledge

Comprehension or Analysis X

10 CFR Part 55 Content: 55.41 X

55.43

Comments:

Control Rod Scram Times
B 3.1.4

BASES (continued)

LCO

The scram times specified in Table 3.1.4-1 (in the accompanying LCO) are required to ensure that the scram reactivity assumed in the DBA and transient analysis is met (Ref. 6).

Scram times can be adversely affected by high control rod drive temperatures. Temperatures over 350°F may result in a measurable delay in scram time response times for an otherwise normally performing CRD due to the potential for flashing of the hot water in the drive when the scram valves are opened. As a conservative measure, CRDs which have a

LCO (continued)

temperature of greater than 350°F will either be classified as "slow" rods or an engineering evaluation can be performed.

This LCO applies only to OPERABLE control rods since inoperable control rods will be inserted and disarmed (LCO 3.1.3). Slow scramming control rods can be conservatively declared inoperable and not accounted for as "slow" control rods.

BFN Unit 2	Panel 9-5 2-XA-55-5A	2-ARP-9-5A Rev. 0043 Page 6 of 45

CRD PUMP A SUCT PRESS LOW 2-PA-85-1

2

(Page 1 of 1)

Sensor/Trip Point:

2-PS-85-1 — 18" Hg abs - Picks up Aux Relay 63X, which gives annunciator and initiates pump trip.

Sensor Location:

Relay 63X
4 kV Unit Bd 2C

2-PS-85-1
Rx Bldg, El 541'
Panel 25-21, R-8 W-LINE

Probable Cause:

A. Dirty suction strainer (El 541', NW Quad, Rx Bldg).
B. Misalignment of pump suction valves.
C. Malfunction of sensor.

Automatic Action:

CRD Pump A trip.

BFN Unit 2	Panel 9-5 2-XA-55-5A	2-ARP-9-5A Rev. 0043 Page 23 of 45

CONTROL ROD DRIVE UNIT TEMP HIGH 2-TA-85-7

17

(Page 1 of 2)

Sensor/Trip Point:

TE-85-7 (1 thru 185) 350°F — Alarm comes from recorders, 2-TR-85-7A, & 2-TR-85-7B

Sensor Location:

Located on each control rod drive.

Probable Cause:

A. Insufficient cooling water flow.
B. Malfunction of sensor.
C. Leaking scram discharge valve.
D. Plugged CRD cooling water orifice.

Automatic Action:

None

Operator Action:

A. **VALIDATE** high temp of CRD on recorder 2-TR-85-7A, & 2-TR-85-7B (Panel 2-9-47) or on ICS. ☐

B. **IF** alarm is valid, **THEN** perform the following as directed by the Unit Supervisor: ☐

- **CHECK** cooling water pressure and flow normal on Panel 2-9-5. ☐
- **DISPATCH** personnel to check for HCU scram discharge valve leaking as indicated by elevated discharge piping temperatures for associated CRD. ☐
- **PERFORM** 2-TI-393 for control rods with high temperatures or failed thermocouples. ☐
- **REFER TO** 0-OI-55, 2-OI-85, 2-AOI-85-3. ☐
- **FLUSH** CRD to unblock restricted cooling water flow. **REFER** to 2-OI-85. ☐
- **DECLARE** the control rod, which is in alarm, "SLOW" as directed by 2-TI-393 per Tech Spec. Table 3.1.4-1 Note 1. ☐
- **RAISE** CRD Flow, as directed by Unit Supervisor, if required to keep the drives cool per "CRD Pump Operation At Elevated Flow" section of 2-OI-85. ☐

C. **IF** alarm is invalid, **THEN PERFORM** the following as directed by the Unit Supervisor: ☐

- **REFER TO** 0-OI-55. ☐
- **INITIATE** WO to determine cause of invalid alarm. ☐

Examination Outline Cross-reference:

295029 High Suppression Pool Wtr Lvl / 5

EA1.04 (10CFR 55.41.7)

Ability to operate and/or monitor the following as they apply to HIGH SUPPRESSION POOL WATER LEVEL:

- RCIC: Plant-Specific

Level	RO
Tier #	1
Group #	2
K/A #	295029EA1.04
Importance Rating	3.4

Proposed Question: **# 26**

During a Unit 2 startup, with power ascension at 20% Reactor Power, a rapid loss of condenser vacuum forces the crew to insert a manual Scram. The following plant conditions exist:

- Reactor Water Level initially lowered to 0 inches and is currently being controlled (+) 2 to (+) 51 inches with RCIC **AND** CRD
- The MSRVs are being used to control pressure **AND** HPCI was started in pressure control mode
- Suppression Pool Water Level reaches (+) 7 inches

Which ONE of the following predicts the current status of RCIC **AND** the required operator action in accordance with 2-EOI-1, "RPV Control"?

RCIC Suction __**(1)**__ **AND** the required operator action is to __**(2)**__.

A. **(1)** is aligned to the CST
(2) continue operation in current configuration.

B. **(1)** is aligned to the CST
(2) manually swap RCIC suction path.

C. **(1)** automatically swaps to the Suppression Pool
(2) continue operation in current configuration.

D. **(1)** automatically swaps to the Suppression Pool
(2) manually swap RCIC suction path

Proposed Answer: **A**

Explanation (Optional):

A **CORRECT:** Part 1 correct – Normal suction lineup for RCIC is to the CST and there is no automatic suction swap. Part 2 correct - RCIC injection in the EOIs is directed to be "with CST Suction if possible" (see procedure excerpt).

B INCORRECT: Part 1 correct – Normal suction lineup for RCIC is to the CST and there is no automatic suction swap. Part 2 incorrect – Plausible in that +7 inches Suppression Pool level in the stem is the mandatory OI-71 trigger point value for swapping the RCIC suction path and it envelops the 5.25, as detailed below. The plausibility of this distractor is based upon the - NOTE: I used +7 inches in the stem because it is the mandatory OI-71 trigger point value for swapping the RCIC suction path and it envelops the 5.25, as detailed below.

C INCORRECT: Part 1 incorrect – Plausibility based on the overwhelming similarities between the HPCI and RCIC Systems; and the frequently confused differences. HPCI automatically swaps suction to the Suppression Pool at +5.25 inches. Part 2 correct - RCIC injection in the EOIs is directed to be "with CST Suction if possible" (see procedure excerpt).

D INCORRECT: Parts 1 and 2 incorrect as explained above.

Technical Reference(s): 2-OI-71 Rev 57, 2-EOI-1 Rev 12 (Attach if not previously provided)

OPL171.040 Rev 22 / 042 Rev 19 (Including version / revision number)

Proposed references to be provided to applicants during examination: _____

Learning Objective: V.B.6, V.B.9, V.B.11, V.B.12 (As available)

Question Source: Bank # | Modified Bank # 0610 Audit # 64 (Note changes or attach parent) | New

Question History: Last NRC Exam

(Optional - Questions validated at the facility since 10/95 will generally undergo less rigorous review by the NRC; failure to provide the information will necessitate a detailed review of every question.)

Question Cognitive Level: Memory or Fundamental Knowledge

Comprehension or Analysis X

10 CFR Part 55 Content: 55.41 X

55.43

Comments: Invoking the procedural aspects into the question development was utilized in an attempt to make a relatively straightforward memory question into a more difficult, higher order question.

OPL171.040
Revision 22

RCIC has no automatic transfer from CST to torus. OI-71 directs transfer when HPCI auto transfers on low CST level or high torus level and if RCIC trips on low suction pressure 10" Hg vacuum.

LXRTEST V6 - [OPERATIONS]

File Edit Insert View Question Select Window Utilities Help

Projects | Questions | Tests | Specs | Scores | Grading | Students | Headers

Navigation: OPL171.040 6

Selection: All 5598 / Selected 0 / Select this one

Layout: Type Multiple choice: single | Choices ABC Col 123 Col 4 1 1

Arial (Western) 12

In accordance with 1-OI-71, Section 6.1 (RCIC Normal Operation) SELECT which ONE of the following describes the operator actions if torus water level rises to +7 ".

A. Verify the suction source automatically swaps from the CST to the torus.

B. Verify both suppression pool suction valves open automatically, then shut the CST suction valve.

C.✓ Open both suppression pool suction valves, when both valves are full open then verify closed the CST suction valve.

D. Concurrently open both suppression pool suction valves and shut the CST suction valve as the suppression pool suction valves are traveling open.

Feedback For each choice All

Answer %answer%

References – 1-OI-71 rev. 0004 Page 21 of 68
[8] **IF** ANY of the following conditions occur while RCIC is injecting into the RPV:
Suppression Pool level reaches +7 in., **OR**
HPCI suction auto transfers to suppression pool, **OR**
RCIC Turbine trips on pump low suction pressure, **THEN**
PERFORM the following steps to transfer RCIC Suction to the Suppression Pool:

Notes
U-071-NO-09 Comment: 2-OI-71, Section 6.17

295029 High Suppression Pool Water Level

2.1.20 Ability to execute procedure steps.
(CFR: 41.10 / 43.5 / 45.12)
IMPORTANCE RO 4.3 SRO 4.2

0610 audit RO Q64 for above K/A (bank question, verified data, updated categories and updated reference)

BFN Unit 2	Reactor Core Isolation Cooling	2-OI-71 Rev. 0057 Page 22 of 75

6.1 Normal Operation (continued)

[5] **BEFORE** Suppression Pool temperature reaches 95°F, **PLACE** RHR in Suppression Pool Cooling Mode. (REFER TO 2-OI-74.) ☐

[5.1] **IF** Suppression Pool temperature reaches 95°F, **THEN**

ENTER 2-EOI-2 Flowchart. ☐

[5.2] **IF** Suppression Pool temperature reaches 105°F, **THEN**

SHUT DOWN RCIC System operation and return to Standby Readiness.
REFER TO Step 6.1[12] or 6.1[13]. ☐

[6] **MAINTAIN** Suppression Pool level between -5.5 and -2 in. (REFER TO 2-OI-74.) ☐

[7] **MONITOR** CST 2 LEVEL, 2-LI-2-161A, on Panel 2-9-6. ☐

[8] **IF** ANY of the following conditions occur while RCIC is injecting into the RPV:

- Suppression Pool level reaches +7 in., **OR** ☐
- HPCI suction auto transfers to suppression pool, **OR** ☐
- RCIC Turbine trips on pump low suction pressure, **THEN**

PERFORM the following steps to transfer RCIC Suction to the Suppression Pool:

[8.1] **OPEN** RCIC SUPPR POOL INBD SUCT VALVE, 2-FCV-71-17. ☐

[8.2] **OPEN** RCIC SUPPR POOL OUTBD SUCT VALVE, 2-FCV-71-18. ☐

[8.3] **WHEN** RCIC SUPPR POOL INBD SUCT VALVE, 2-FCV-71-17, and the RCIC SUPPR POOL OUTBD SUCT VALVE, 2-FCV-71-18, are fully open, **THEN**

VERIFY CLOSED RCIC CST SUCTION VALVE, 2-FCV-71-19. ☐

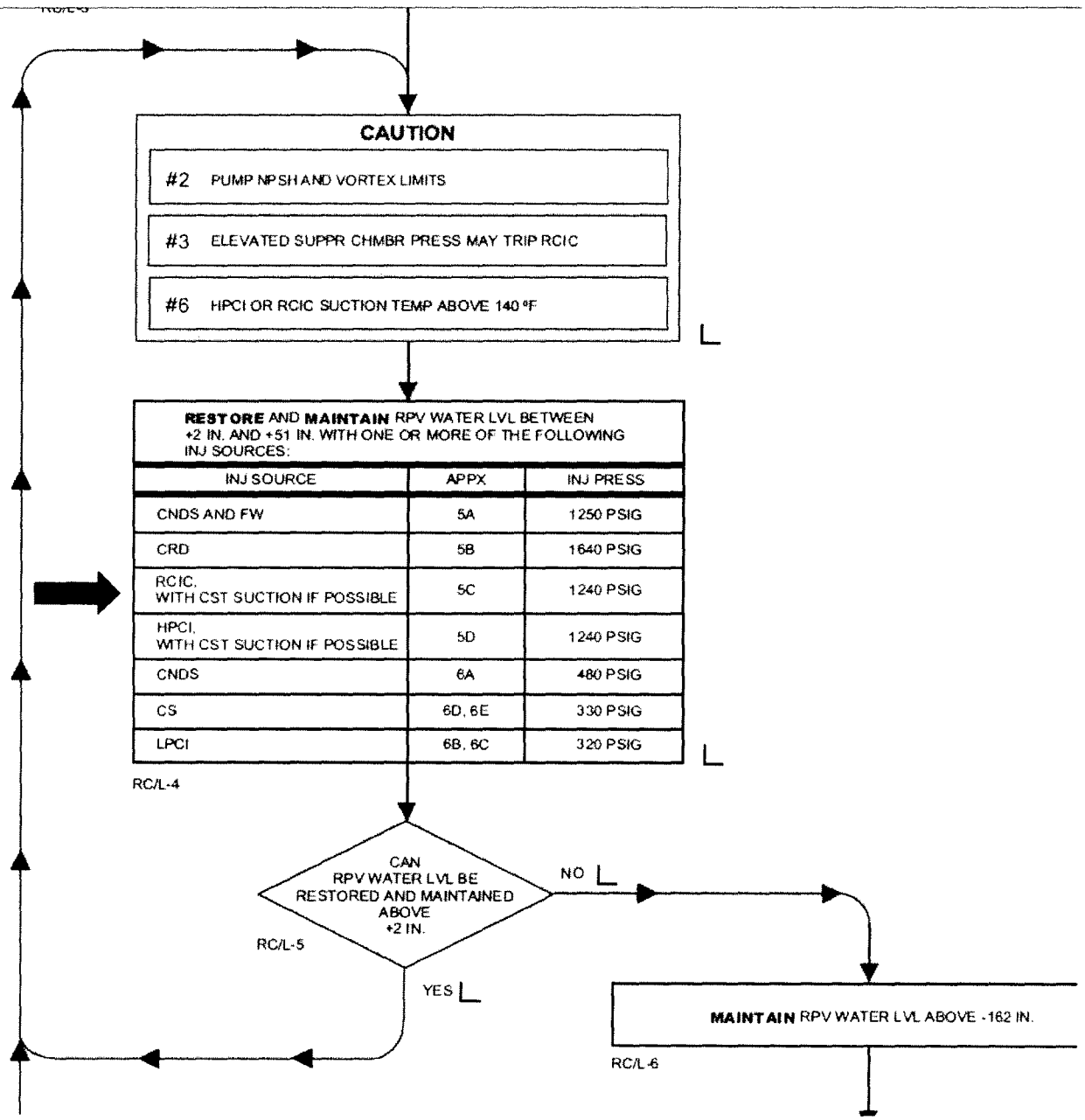
CAUTION
#2 PUMP NPSH AND VORTEX LIMITS
#3 ELEVATED SUPPR CHMBR PRESS MAY TRIP RCIC
#6 HPCI OR RCIC SUCTION TEMP ABOVE 140 °F
RESTORE AND MAINTAIN RPV WATER LVL BETWEEN +2 IN. AND +51 IN. WITH ONE OR MORE OF THE FOLLOWING INJ SOURCES:
INJ SOURCE | APPX | INJ PRESS
CNDS AND FW | 5A | 1250 PSIG
CRD | 5B | 1640 PSIG
RCIC, WITH CST SUCTION IF POSSIBLE | 5C | 1240 PSIG
HPCI, WITH CST SUCTION IF POSSIBLE | 5D | 1240 PSIG
CNDS | 6A | 480 PSIG
CS | 6D, 6E | 330 PSIG
LPCI | 6B, 6C | 320 PSIG
RC/L-4
CAN RPV WATER LVL BE RESTORED AND MAINTAINED ABOVE +2 IN.
RC/L-5
NO
YES
MAINTAIN RPV WATER LVL ABOVE -162 IN.
RC/L-6

Examination Outline Cross-reference:

295036 Secondary Containment High Sump/Area Water Level / 5

EK1.01 (10CFR 55.41.10)

Knowledge of the operational implications of the following concepts as they apply to SECONDARY CONTAINMENT HIGH SUMP/AREA WATER LEVEL:

- Radiation releases

Level	RO
Tier #	1
Group #	2
K/A #	295036EK1.01
Importance Rating	2.9

Proposed Question: **# 27**

Following a LOCA on Unit 1, a leak in the RHR System I Pump Area results in increased sump operation **AND** elevated radiation levels.

Which ONE of the following completes the statement?

If RHR System I Pump Area water level exceeds __**(1)**__ **OR** RHR System I Pump Area radiation level exceeds__**(2)**__, 1-EOI-3, "Secondary Containment Control," must be entered.

A. **(1)** 2 inches
(2) 72 mr/hr

B. **(1)** 66 inches
(2) 72 mr/hr

C. **(1)** 2 inches
(2) ARM Alarm Set Point

D. **(1)** 66 inches
(2) ARM Alarm Set Point

Proposed Answer: **C**

Explanation (Optional):

A INCORRECT: Part 1 = correct – Area Water Level > 2 inches is an EOI-3 entry condition. Part 2 = incorrect – EOI entry for Area Radiation Level is associated with ARM alarm set point. The value of 72 mr/hr is plausible in that it is the EOI-3 entry for Refuel Zone Vent Exhaust and Reactor Zone Vent Exhaust.

B INCORRECT: Part 1 = incorrect as explained above – Value of 66 inches is plausible in that this is the EOI-3 entry for Secondary CTMT Floor Drain Sump Level. Part 2 = incorrect as explained above.

C **CORRECT**: Part 1 = correct - Secondary containment area water level above maximum normal operating level of 2 inches is an indication that steam or water may be discharging into secondary containment. Part 2 = correct - Secondary containment area radiation level above the maximum normal operating value of Table 4 (ARM Alarm Set Point) is an indication that water from a primary system, or from a primary to secondary system leak, may be discharging into secondary containment.

D INCORRECT: Part 1 = incorrect as explained above. Part 2 = correct as explained above.

Technical Reference(s): OPL171.204 Rev 7 (Attach if not previously provided)

(Including version / revision number)

Proposed references to be provided to applicants during examination: NONE

Learning Objective: _____ (As available)

Question Source: Bank # _____

Modified Bank # _____ (Note changes or attach parent)

New X

Question History: Last NRC Exam _____

(Optional - Questions validated at the facility since 10/95 will generally undergo less rigorous review by the NRC; failure to provide the information will necessitate a detailed review of every question.)

Question Cognitive Level: Memory or Fundamental Knowledge X

Comprehension or Analysis

10 CFR Part 55 Content: 55.41 X

55.43

Comments:

f. Area water levels above 2 inches

Secondary containment area water level above maximum normal operating level is an indication that steam or water may be discharging into secondary containment. Maximum normal operating secondary containment water level is defined to be the highest value of secondary containment area water level expected to occur during normal plant operating conditions with all directly associated support and control systems functioning properly.

g. Area radiation level above the maximum normal operating value of Table 4.

Secondary containment area radiation level above the maximum normal operating value of Table 4 is an indication that water from a primary system, or from a primary to secondary system leak, may be discharging into secondary containment. Maximum normal operating secondary containment area radiation level is defined to be the highest value of secondary containment areas radiation expected to occur during normal plant operating conditions with all directly associated support and control system functioning properly.

Examination Outline Cross-reference:

203000 RHR/LPCI: Injection Mode

K5.02 (10CFR 55.41.5)

Knowledge of the operational implications of the following concepts as they apply to RHR/LPCI: INJECTION MODE (PLANT SPECIFIC):

- Core cooling methods

Level	RO
Tier #	2
Group #	1
K/A #	203000K5.02
Importance Rating	3.5

Proposed Question: **# 28**

Given the following plant conditions on Unit 1:

- Reactor Water Level is (-) 170 inches
- Reactor Pressure is 55 psig
- Vessel injection is 4500 gpm from RHR

Based on the above conditions, which ONE of the following completes the statement?

Adequate Core Cooling __**(1)**__ **AND** Clad temperatures are expected to __**(2)**__.

A. **(1)** is met
(2) remain <1500 ° F.

B. **(1)** is **NOT** met
(2) remain <1500 ° F.

C. **(1)** is **NOT** met
(2) exceed 1800 °F.

D. **(1)** is met
(2) remain between 1500 °F **AND** 1800 °F.

Proposed Answer: **A**

Explanation (Optional):

A **CORRECT:** Part 1 = correct, Adequate Core Cooling is assured. Although submergence is not maintained with level < -162 inches (TAF) Steam Cooling assures adequate core cooling with level > -180" with injection. Part 2 = correct, Clad temperatures will not exceed 1500° F with Steam Cooling.

B INCORRECT: Part 1 = incorrect. Adequate Core Cooling is assured with steam cooling. Part 2 = correct. Clad temperatures will not exceed 1500° F with Steam Cooling.

C INCORRECT: Part 1 = incorrect. Adequate Core Cooling assure with steam cooling. Part 2 = incorrect. Clad temperatures will not exceed1800° F with Steam Cooling.

D INCORRECT: Part 1 = correct. Adequate Core Cooling is assured. Part 2 = incorrect. Clad temperatures will not exceed 1500° F with Steam Cooling.

Technical Reference(s): OPL171.201 Rev 7 (Attach if not previously provided)

(Including version / revision number)

Proposed references to be provided to applicants during examination: NONE

Learning Objective: _____ (As available)

Question Source: Bank # X

Modified Bank #

New

(Note changes or attach parent)

Question History: Last NRC Exam Brunswick 08 #3

(Optional - Questions validated at the facility since 10/95 will generally undergo less rigorous review by the NRC; failure to provide the information will necessitate a detailed review of every question.)

Question Cognitive Level: Memory or Fundamental Knowledge

Comprehension or Analysis X

10 CFR Part 55 Content: 55.41 X

55.43

Comments:

a. Adequate Core Cooling — Obj. V.B.10.a

Any of the following conditions (1-4):

(1) Submergence: Reactor water level is verified at or above TAF, and based on present and past trends and plant conditions, is expected to remain above TAF.

(2) Spray Cooling: During the execution of C1, the following conditions are met:

- The reactor can be determined to be shutdown without boron (note 1)

AND

- One Core Spray subsystem is injecting at or above 6250 gpm. — One spray ring for design pattern

AND

- RPV water level can be determined to be above -215 inches (2/3 core height)

(3) Steam Cooling With Injection:

- During execution of C5 and C1, RPV water level can be maintained above the lower water level band allowed by the procedure, [Minimum Steam Cooling Water Level (MSCWL) - 180 inches].

This will maintain PCT < 1500 °F

OR

- Reactor pressure can be maintained above MARFP following reactor depressurization.

OR

- During C4 execution it has been verified that based on present and past trends and plant conditions, either Minimum Reactor Flooding Pressure (all rods in) or Minimum Alternate Reactor Flooding Pressure (all rods not in) can be maintained.

(4) Steam Cooling Without Injection: During C1 execution RPV water level has not yet lowered to [Minimum Zero Injection Water Level (MZIWL) -200] and reactor pressure is either at the lifting point of the MSRVs or is stabilized and not rising.

This will maintain PCT < 1800 °F

BRUNSWICK 2008

3. Given the following plant conditions on Unit One:

Reactor water level	-25 inches
Reactor pressure	55 psig
Vessel Injection	4500 gpm from RHR

(reference provided)

In accordance with 0OI-37.4, Reactor Vessel Control Procedure Basis Document, which one of the following identifies the current status of Adequate Core Cooling and the operational implications of these conditions?

A. Adequate Core Cooling is met;
Clad temperatures are expected to remain between 1500° F and 1800° F.

B. ✓ Adequate Core Cooling is met;
Clad temperatures are expected to remain ≤1500° F

C. Adequate Core Cooling is NOT met;
Clad temperatures are expected to exceed 1800° F

D. Adequate Core Cooling is NOT met;
Clad temperatures are expected to remain ≤1800° F

REFERENCE:
LL4 graph from EOP-UG to be provided to student
Introduction to ECCS Student Handout
CLS-LP-110B Introduction to ECCS

EXPLANATION:
Four viable methods of Adequate Core Cooling (ACC) exist within the EOPs.
Core Submergence (Level above TAF),
Steam Cooling with Injection (Level above LL4),
Steam Cooling without Injection (Level above LL5) and
Reactor water level at jet pump suction with core spray flow of at least 5000 gpm.

The conditions listed satisfy the ACC requirements for Steam Cooling with Injection.
If reactor water level were to drop below LL4, and RHR injection were maintained, ACC would not be meet. By maintaining this method of ACC , the core will generate sufficient steam to preclude any clad temperature from exceeding 1500F.

CHOICE "A" - Incorrect. Clad temperatures will remain below 1500F

CHOICE "B" - Correct Answer

CHOICE "C" - Incorrect. ACC is maintained and Clad temperatures will remain below 1500F.

CHOICE "D" - Incorrect. ACC is maintained and Clad temperatures will remain below 1500F

Examination Outline Cross-reference:

205000 Shutdown Cooling

K2.02 (10CFR 55.41.7)

Knowledge of electrical power supplies to the following:

- Motor operated valves

Level	RO	SRO
Tier #	2	----
Group #	1	----
K/A #	205000K2.02	
Importance Rating	2.5	----

Proposed Question: **# 29**

Which ONE of the following completes the statement?

The power supply for RHR SYS II INBD INJECTION VLV, 2-FCV-74-67 is from 480 RMOV Board __**(1)**__ **AND** RHR SYS II MINIMUM FLOW VLV, 2-FCV-74-30, is from 480 RMOV Board __**(2)**__.

A. **(1)** 2B
(2) 2B.

B. **(1)** 2B
(2) 2E.

C. **(1)** 2E
(2) 2B.

D. **(1)** 2E
(2) 2E.

Proposed Answer: **D**

Explanation (Optional):

A INCORRECT: Part 1 and 2 = incorrect, RHR SYS II INBD INJECTION VLV, 2-FCV-74-67 and RHR SYS II MINIMUM FLOW VLV, 2-FCV-74-30 are powered from 480 RMOV Board 2E. Plausible in that most RHR SYS II valves are powered from 480 RMOV Board 2B

B INCORRECT: Part 1 = incorrect as explained above. Part 2 = correct, as explained above.

C INCORRECT: Part 1 = correct as explained above. Part 2 = incorrect, as explained above.

D **CORRECT**: Part 1 = correct, RHR SYS II INBD INJECTION VLV, 2-FCV-74-67 is powered from 480 RMOV Board 2E. Part 2 = correct, RHR SYS II MINIMUM FLOW VLV, 2-FCV-74-30 is powered from 480 RMOV Board 2E.

Technical Reference(s): 2-OI-74 Rev 141, OPL171.044 Rev 16 (Attach if not previously provided)

0-OI-57B Att. 3E Rev 178 (Including version / revision number)

Proposed references to be provided to applicants during examination: NONE

Learning Objective: V.B.8 (As available)

Question Source: Bank #

	Modified Bank #		(Note changes or attach parent)
	New	X	
Question History:	Last NRC Exam		

(Optional - Questions validated at the facility since 10/95 will generally undergo less rigorous review by the NRC; failure to provide the information will necessitate a detailed review of every question.)

Question Cognitive Level:	Memory or Fundamental Knowledge	X
	Comprehension or Analysis	
10 CFR Part 55 Content:	55.41	X
	55.43	

Comments:

4 Valves Obj. V.B.8

a. Power supplies - All RHR motor-operated valves are powered from the 480V Reactor MOV Boards except as noted. The Reactor MOV Board power supplies are as follows. Note divisional separation maintained. Obj. V.E.6

480 RMOV BOARD	NORMAL POWER	DIV	ALT POWER	DIV	VALVES
"A"	480V S/D "A"	I	480V S/D "B"	II	RHR Sys I valves (except as noted)
"B"	480V S/D "B"	II	480V S/D "A"	I	RHR Sys II valves (except as noted)
"C"	480V S/D "B"	II	480V S/D "A"	I	none
"D" **	"DN" MG Set	I	"DA" MG Set	II	74-7 & 53
"E" **	"EN" MG Set	II	"EA" MG Set	I	74-30 & 67

- ** Unit 1 does not have RMOV Bd 'D' or 'E'. The loads on 'D' Bd are fed from 1A Bd and 'E' are fed from 1B Bd
- Outboard Shutdown Cooling Isolation Valve FCV-74-47 is powered from 250 VDC MOV Board A. Obj. V.B.8

BFN Unit 2	Residual Heat Removal System	2-OI-74 Rev. 0141 Page 129 of 427

8.8.2 Initiation / Operation of RHR Loop II in Shutdown Cooling (continued)

CAUTION

[INPO] Failure to have the following valves closed may result in inadvertent draining of the reactor vessel when the RHR SHUTDOWN COOLING OUTBD and INBD ISOL VLVs, 2-FCV-74-47 and 2-FCV-74-48, are open:

- RHR PUMP 2B and 2D SUPPR POOL SUCT VLVs, 2-FCV-74-24 and 2-FCV-74-35.
- RHR SYS II SUPPR CHBR/POOL ISOL VLV, 2-FCV-74-71. [INPO SOER 87-002]

[17] **VERIFY** in ON, Breaker 2-BKR-074-0047 for 2-FCV-74-47 at the 250 VDC RMOV Bd 2A compartment R1A. ☐

[18] **OPEN** RHR SHUTDOWN COOLING SUCT OUTBD and INBD ISOL VLVs, 2-FCV-74-47 and 2-FCV-74-48. ☐

[19] **CLOSE** RHR SYS II LPCI OUTBD INJECT VALVE, 2-FCV-74-66. ☐

[20] **OPEN** RHR SYS II LPCI INBD INJECT VALVE, 2-FCV-74-67. ☐

[21] **VERIFY** at least one RHRSW Pump is operating on each EECW Header. ☐

[22] **VERIFY** desired Reactor water level is established. ☐

[25] **ESTABLISH** approximately 2000-2500 gpm RHRSW flow through the RHR Heat Exchanger being used for shutdown cooling using RHR HX 2B (2D) RHRSW OUTLET VLV, 2-FCV-23-46 (52). ☐

[26] **START** RHR PUMP 2B (2D) using 2-HS-74-28A (39A) **THEN**

THROTTLE RHR SYS II LPCI OUTBD INJECTION VALVE, 2-FCV-74-66, to establish and maintain RHR flow as indicated by 2-FI-74-64, RHR SYS II FLOW, as follows: ☐

RHR Pumps in Operation	1	2
Loop Flow	7,000 to 10,000	14,000 to 20,000

3.0 **ATTACHMENT DATA (continued)**

Performed On: _____

Panel/Breaker Number	Component Description	Required Position	Unit	Initials 1st/IV
	480V Reactor MOV Board 2E, Div - II Reactor Bldg - El 621', R-U8 (2-45E751 - 11)			
1D	2-BKR-268-002E/01D NORMAL SUPPLY BREAKER FROM MG SET 2EN	CLOSED	2	___ ___
2C	2-BKR-074-0067 RHR SYS II INBD INJECTION VLV FCV-74-67		2	ALIGNED BY 2-OI-74
3E	2-BKR-068-0003 RECIRC PUMP 2A DISCH VALVE		2	ALIGNED BY 2-OI-68
4A	2-BKR-268-002E/04A EMER MAINTENANCE FEED FOR 480V RMOV BD 2E	OFF(3)	2	___ ___
4C	2-BKR-26B-0002E/4C SPARE	OFF	2	___ ___
4E	2-BKR-074-0030 RHR SYS II MINIMUM FLOW VLV		2	ALIGNED BY 2-OI-74
5D	2-BKR-268-002E/05D EMERGENCY SUPPLY BREAKER FROM MG SET 2EA	CONNECTED AND OPEN	2	___ ___

(3) This breaker shall remain OPEN except when in Cold Shutdown. See drawing 2-45E751-11

Examination Outline Cross-reference:	Level	RO
205000 Shutdown Cooling	Tier #	2
A4.03 (10CFR 55.41.7)	Group #	1
Ability to manually operate and/or monitor in the control room:	K/A #	205000A4.03
• SDC/RHR discharge valves	Importance Rating	3.6

Proposed Question: **# 30**

Preparations are underway to take Unit 2 to Cold Shutdown following a Scram. RHR Loop II has been flushed, **AND** as soon as the RHR Pump 2B is started for Shutdown Cooling (SDC), Reactor Level lowers to 0 inches. 2-AOI-74-1, "Loss of Shutdown Cooling," has been entered.

Assuming RHR Loop I is in Standby Readiness, which ONE of the following completes the statement for restoring Reactor Water Level?

Verify __**(1)**__ RHR SHUTDOWN COOLING SUCT OUTBD VLV, 2-FCV-74-47, **AND / OR** RHR SHUTDOWN COOLING SUCT INBD VLV, 2-FCV-74-48, traveled closed, then open __**(2)**__ following start of a RHR Pump.

A. **(1) BOTH**
(2) RHR SYS I OUTBD INJECT VALVE, 2-FCV-74-52

B. **(1) BOTH**
(2) RHR SYS I INBD INJECT VALVE, 2-FCV-74-53

C. **(1) EITHER**
(2) RHR SYS I OUTBD INJECT VALVE, 2-FCV-74-52

D. **(1) EITHER**
(2) RHR SYS I INBD INJECT VALVE, 2-FCV-74-53

Proposed Answer: **B**

Explanation (Optional):

A INCORRECT: A Group II Isolation signal has been initiated @ + 2 inches. Per 2-AOI-74-1, step 4.2 [5.1.2], (2-POI-74-2 is not in effect), 2-74-47 / 48 / 53 will **all** travel closed on the isolation and are procedurally required to be verified closed. 2-74-53 is affected by the isolation signal, and will need to be re-opened, [5.2.3].

B **CORRECT:** A Group II Isolation signal has been initiated @ + 2 inches. Per 2-AOI-74-1, step 4.2 [5.1.2], (2-POI-74-2 is not in effect), 2-74-47 / 48 / 53 will **all** travel closed on the isolation and are procedurally required to be verified closed. 2-74-53 is affected by the isolation signal, and will need to be re-opened, [5.2.3].

C INCORRECT: A Group II Isolation signal has been initiated @ + 2 inches. Per 2-AOI-74-1, step 4.2 [5.1.2], (2-POI-74-2 is not in effect), 2-74-47 / 48 / 53 will **all** travel closed on the isolation and are procedurally required to be verified closed. 2-74-52 is unaffected by the isolation signal, but will need to be re-throttled following re-establishment of flow [5.2.4].

D INCORRECT: A Group II Isolation signal has been initiated @ + 2 inches. Per 2-AOI-74-1, step 4.2 [5.1.2], (2-POI-74-2 is not in effect), 2-74-47 / 48 / 53 will **all** travel closed on the isolation and are procedurally required to be verified closed. 2-74-52 is unaffected by the isolation signal, but will need to be re-throttled following re-establishment of flow [5.2.4].

Technical Reference(s): 2-AOI-74-1 Rev 33 (Attach if not previously provided)

OPL171.044 Rev 16, OPL171.017 Rev 13 (Including version / revision number)

Proposed references to be provided to applicants during examination: NONE

Learning Objective: V.B.10 (As available)

Question Source: Bank # ____ Modified Bank # ____ (Note changes or attach parent)

New X

Question History: Last NRC Exam ____

(Optional - Questions validated at the facility since 10/95 will generally undergo less rigorous review by the NRC; failure to provide the information will necessitate a detailed review of every question.)

Question Cognitive Level: Memory or Fundamental Knowledge

Comprehension or Analysis X

10 CFR Part 55 Content: 55.41 X

55.43

Comments:

BFN Unit 2	Loss of Shutdown Cooling	2-AOI-74-1 Rev. 0033 Page 6 of 31

4.0 OPERATOR ACTIONS

4.1 Immediate Actions

None

4.2 Subsequent Actions

[5] **IF** Shutdown Cooling isolates on low RPV water level or high Drywell press (GROUP 2 ISOL) AND RPV water level needs restoring using LPCI, **THEN** (Otherwise N/A)

PERFORM the following before reaching -122 inches RPV water level: ☐

> **NOTE**
>
> The LPCI inboard injection valve that is aligned per 2-POI-74-2 will already be in the required accident position with the breakers open and will **NOT** isolate.

[5.1] **PERFORM** the following on a group 2 isolation: ☐

[5.1.2] **IF** 2-POI-74-2 is **NOT** in effect, **THEN**

VERIFY CLOSED the following valves on a Group 2 isolation: ☐

- RHR SHUTDOWN COOLING SUCT OUTBD ISOL VLV, 2-FCV-74-47. ☐
- RHR SHUTDOWN COOLING SUCT INBD ISOL VLV, 2-FCV-74-48. ☐
- RHR SYS I LPCI INBD INJECT VALVE, 2-FCV-74-53. ☐
- RHR SYS II LPCI INBD INJECT VALVE, 2-FCV-74-67. ☐

[5.2] **DEPRESS** RHR SYS I(II) SD CLG INBD INJECT ISOL RESET, 2-XS-74-126 and 2-XS-74-132. ☐

[5.2.1] **VERIFY** 2-IL-74-126 and 2-IL-74-132 extinguished. ☐

[5.2.2] **VERIFY** RHR Pumps in the RHR Loop **NOT** aligned for Shutdown Cooling, are operating. ☐

[5.2.3] **VERIFY** OPEN, RHR SYS I(II) LPCI INBD INJECT VALVE, 2-FCV-74-53(67). ☐

[5.2.4] **THROTTLE OPEN**, RHR SYS I(II) LPCI OUTBD INJECT VALVE, 2-FCV-74-52(66). ☐

OPL171.044 r16

g. Reactor vessel low water level +2 inches (Lvl 3)

Level switches used to initiate: PCIS Group 2 isolation of Shutdown Cooling, CS System, RHR SDC isolation valves, RHR inbd isolation valves, RWCU isolation and a reactor scram.

h. RHR pressure high permissive > 100 psig — TP-1 and 2

Pressure switches on discharge of each RHR pump indicate pump running to ADS.

c. Shutdown Cooling suction supply valves (Inbd-48; Outbd-47)

(1) No automatic opening interlocks TP-21, 22 and 23 Obj. V.C.5

(2) Valves automatically close on:

(a) Reactor pressure > 100 psig

(b) Group 2 isolation (drywell pressure > 2.45 psig or level < 2 inches) Obj. V.D.8

(3) Switch 74-157 (480 RMOV 1/2A) must be in SHUTDOWN to operate 74-48 from any location. (Units 1 & 2 only) The breaker for 74-47 is normally open for App R concerns

(4) "EMERGENCY" position allows operation at breaker only. Removes PCIS logic closure circuit. Emergency Switch on both valves on all three units.

TABLE 1
(continued)

Initiation Signals	Group 2	Valve Type	Location Ref. to Drywell	Power to Open (3)	Power to Close (4)	Re-Open Manipulation
Level 3; Rx low level: +2"	RHR shutdown cooling supply (FCV 74-47)	MO Gate	Outside	DC	DC	(9)
Hi Drywell Press +2.45 psig	RHR shutdown cooling supply (FCV 74-48)	MO Gate	Inside	AC	AC	(9)
	RHR LPCI to Reactor (FCV 74-53 &67)	MO Gate	Outside	AC	AC	(10)

Examination Outline Cross-reference:	Level	RO
206000 HPCI **K4.03** (10CFR 55.41.7) Knowledge of HIGH PRESSURE COOLANT INJECTION (HPCI) SYSTEM design feature(s) and/or interlocks which provide for the following: • Resetting turbine trips: BWR-2,3,4	Tier #	2
	Group #	1
	K/A #	206000K4.03
	Importance Rating	4.2

Proposed Question: **# 31**

Unit 2 HPCI auto initiated **AND** injected following a total loss of Feedwater, then subsequently tripped on High Reactor Water Level. The following conditions currently exist:

- Reactor Level is (+) 20 inches and lowering slowly
- Drywell Pressure is 2.0 psig and rising slowly

Which ONE of the following completes the statement?

If the Unit Operator depresses the __**(1)**__pushbutton, then HPCI will__**(2)**__.

A. **(1)** HPCI AUTO-INIT RESET, 2-XS-73-59,
(2) re-start **AND** inject.

B. **(1)** HPCI AUTO-INIT RESET, 2-XS-73-59,
(2) re-start but **NOT** inject.

C. **(1)** HPCI TURBINE TRIP RX LVL HIGH RESET, 2-HS-73-18B,
(2) **NOT** re-start.

D. **(1)** HPCI TURBINE TRIP RX LVL HIGH RESET, 2-HS-73-18B,
(2) re-start **AND** inject.

Proposed Answer: **D**

Explanation (Optional):

A INCORRECT: Depressing the INITIATION SIGNAL RESET will not result in HPCI starting. Plausible if the examinee fails to recognize that no auto initiation conditions currently present.

B INCORRECT: Depressing the INITIATION SIGNAL RESET will not result in HPCI starting. Plausible if the examinee fails to recognize that no auto initiation conditions currently present and thinks that flow controller takes signal from reactor level.

C INCORRECT: When HI REACTOR WATER LEVEL TRIP RESET (HS-73-18B) depressed, HPCI will re-start. Plausible if examinee thinks that initiation logic is not currently actuated.

D **CORRECT**: On a High Level Trip > (+) 51" HPCI will auto reset if level decreases to (-) 45 inches again. To roll HPCI after water level trip and before (-) 45 inches is reached, High Level must be manually reset. Injection valve will re-open.

Technical Reference(s): 2-OI-73 Rev 81 (Attach if not previously provided)

(Including version / revision number)

Proposed references to be provided to applicants during examination: NONE

Learning Objective: _____ (As available)

Question Source: Bank # X

Modified Bank #

New

(Note changes or attach parent)

Question History: Last NRC Exam Hatch 07 #6

(Optional - Questions validated at the facility since 10/95 will generally undergo less rigorous review by the NRC; failure to provide the information will necessitate a detailed review of every question.)

Question Cognitive Level: Memory or Fundamental Knowledge

Comprehension or Analysis X

10 CFR Part 55 Content: 55.41 X

55.43

Comments:

BFN Unit 2	High Pressure Coolant Injection System	2-OI-73 Rev. 0081 Page 43 of 81

8.3 HPCI Turbine Trip (continued)

NOTE

A HPCI Pump suction pressure indication above 55 psig after the HPCI Turbine is tripped may indicate RPV leakage through the HPCI pump discharge check valve, 2-FCV-73-45.

[3] **IF** HPCI PUMP SUCTION PRESS, 2-PI-73-28A, indicates above 55 psig, **THEN**

CLOSE the HPCI PUMP INJECTION VALVE, 2-FCV-73-44, or the HPCI PUMP DISCHARGE VALVE, 2-FCV-73-34. ☐

NOTES

1) If trip signal is cleared while an initiation signal is present from either high drywell pressure or low-low RPV water level, the HPCI turbine will auto restart unless the signal that tripped HPCI was an auto isolation. This would require manual re-opening of HPCI STEAM LINE INBD and OUTBD ISOL VALVEs, 2-FCV-73-2 and 3.

2) If +51 in. RPV water level tripped HPCI, the turbine trip is required to be reset by the operator if RPV makeup is desired prior to HPCI re-start at -45 in. RPV water level

[4] **IF** initiation signal remains present and HPCI Turbine restarts, **THEN**

VERIFY HPCI Turbine automatic initiation. **REFER TO** Section 5.1. ☐

[5] **IF** initiation logic is actuated AND, HPCI operation is desired, **THEN**

[5.1] **VERIFY** trip conditions are clear. ☐

[5.2] **DEPRESS** HPCI TURBINE TRIP RX LVL HIGH RESET pushbutton, 2-HS-73-18B. ☐

[5.3] **CHECK** HPCI TURBINE TRIP LVL HIGH, 2-IL-73-18B amber light has extinguished. ☐

[5.4] **VERIFY** HPCI turbine automatic initiation. **REFER TO** Section 5.1. ☐

HATCH 2007

6. 206000A1.01 001

Unit 2 HPCI auto-initiated and injected following the loss of both Reactor Feedwater Pumps and then subsequently tripped on RPV high water level. The following conditions currently exist:

- RPV water level is +20 inches and slowly lowering
- Drywell pressure is 1.5 psig and slowly rising

Given these current plant conditions, which ONE of the following choices will complete the following statement to describe the HPCI logic?

"If the operator depresses the ...

A✓ HI REACTOR WATER LEVEL TRIP RESET pushbutton, then HPCI will re-start and inject after 2E41-F006, HPCI Injection Valve, re-opens.

B. HI REACTOR WATER LEVEL TRIP RESET pushbutton, HPCI will NOT re-start.

C. INITIATION SIGNAL RESET pushbutton, HPCI will re-start but NOT inject.

D. INITIATION SIGNAL RESET pushbutton, then HPCI will re-start and inject after 2E41-F006, HPCI Injection Valve, re-opens.

Note: The initiation signal light (white light) is currently illuminated. This light informs the operator that an initiation signal has occurred sometime in the past. HPCI is currently not running even though level is below the high level trip setpoint.

A. Correct.

B. Incorrect because HPCI will restart. Plausible if applicant thinks that no initiation signal currently exists.

C. Incorrect because this pushbutton will not result in HPCI starting. Plausible if applicant thinks that flow controller takes its signal from reactor level (vs flow).

D. Incorrect because this pushbutton will not result in HPCI starting. Plausible if applicant thinks that current drywell pressure is auto-initiation setpoint. (vs 1.85 psig)

Examination Outline Cross-reference:	Level	RO	SRO
209001 LPCS	Tier #	2	
K1.12 (10CFR 55.41.5)	Group #	1	
Knowledge of the physical connections and/or cause-effect relationships between the LOW PRESSURE CORE SPRAY (LPCS) SYSTEM and the following:	K/A #	209001K1.12	
• ECCS room coolers	Importance Rating	2.9	

Proposed Question: **# 32**

Which ONE of the following completes the statement?

Each Core Spray Loop has a Room Cooler which __**(1)**__required for Core Spray Operability. The Room Cooler __**(2)**__ when the associated Core Spray Loop is manually started.

A. **(1)** is
(2) must be manually started

B. **(1)** is
(2) will automatically start

C. **(1)** is **NOT**
(2) must be manually started

D. **(1)** is **NOT**
(2) will automatically start

Proposed Answer: **B**

Explanation (Optional):

A INCORRECT: Part 1 is correct – Per TR 3.5.3, the equipment area cooler associated with each Core Spray Pump must be operable when that Core Spray System is considered to be operable. Part 2 is incorrect as detailed in Explanation B – Any Core Spray Pump start will auto-start the associated Room Cooler.

B **CORRECT**: Part 1 is correct – Per TR 3.5.3, the equipment area cooler associated with each Core Spray Pump must be operable when that Core Spray System is considered to be operable. Part 2 is correct – Any Core Spray Pump start will auto-start the associated Room Cooler.

C INCORRECT: Both parts incorrect as detailed in Explanation B.

D INCORRECT: Part 1 incorrect - as detailed in Explanation B. Part 2 is correct – as detailed in Explanation B.

Technical Reference(s): TR 3.5.3 (Attach if not previously provided)

OPL171.045 Rev 14 (Including version / revision number)

Proposed references to be provided to applicants during examination: NONE

Learning Objective: _____ (As available)

Question Source: Bank #

Modified Bank # X (Note changes or attach parent)

New

Question History: Last NRC Exam Brunswick 08 #78

(Optional - Questions validated at the facility since 10/95 will generally undergo less rigorous review by the NRC; failure to provide the information will necessitate a detailed review of every question.)

Question Cognitive Level: Memory or Fundamental Knowledge

Comprehension or Analysis X

10 CFR Part 55 Content: 55.41 X

55.43

Comments:

6. Room Coolers

The Core Spray room coolers start on any Core Spray pump start or room temp ~100°F and will remain on until room temperature decreases to < 95°F and no Core Spray pumps running.

Room Coolers are powered from A & B 480V RMOV Bd.

Obj. V.D.3
Obj. V.E.5
Obj. V.B.2.c
Obj. V.C.1.c
Obj. V.D.10.b
Obj. V.E.12.b

TR 3.5 EMERGENCY CORE COOLING SYSTEMS

TR 3.5.3 Equipment Area Coolers

LCO 3.5.3 The equipment area cooler associated with each RHR pump and the equipment area cooler associated with each set of Core Spray pumps (A and C or B and D) must be OPERABLE at all times when the pump or pumps served by that specific cooler is considered to be OPERABLE.

APPLICABILITY: Whenever the associated subsystem is required to be OPERABLE

ACTIONS

CONDITION	REQUIRED ACTION	COMPLETION TIME
A. One or more Equipment Area Cooler inoperable.	A.1 Declare the pump(s) served by that cooler inoperable. (Refer to applicable TS and TRM LCOs)	Immediately

TECHNICAL SURVEILLANCE REQUIREMENTS

SURVEILLANCE		FREQUENCY
TSR 3.5.3.1	Verify each Equipment Area Cooler automatically starts when the associated Core Spray or RHR pump is started.	92 days

BRUNSWICK 2008

78. Unit Two is operating at rated power.

While performing 0PT-07.2.4A, Core Spray Loop A Operability, Core Spray Room Cooler A fails to start when Core Spray Pump A is started.

The Reactor Building AO reports that the Room Cooler breaker has tripped on thermal overload.

Which one of the following choices completes the statements below per 0AP-13, Plant Equipment Control, and 0OI-01.08, Control of Equipment and System Status?

The breaker _____ allowed to be reset once.

The room cooler _____ required for Core Spray Loop A operability.

A. is
   is NOT

B. is
   is

C. is NOT
   is NOT

D. is NOT
   is

REFERENCE:
NPSH graphs to be provided to examinee.
0OI-01.08 Control of Equipment and System Status, section 5.1.2.4 ECCS Rm Clrs
AP-13 Plant Equipment Control

EXPLANATION:
Per the direction of OI-01.08, when any room cooler is determined to be inoperable, then the ECCS equipment associated with that room cooler must be declared INOP per the applicable TS.

CHOICE "A" - Incorrect - Per AP-13 a tripped breaker should not be reset until an investigation has been performed, except in case of an emergency. when room cooler is determined to be inoperable, then the ECCS equipment associated with that room cooler must be declared INOP per the applicable TS

CHOICE "B" - Incorrect - Per AP-13 a tripped breaker should not be reset until an investigation has been performed, except in case of an emergency.

CHOICE "C" - Incorrect. when room cooler is determined to be inoperable, then the ECCS equipment associated with that room cooler must be declared INOP per the applicable TS.

CHOICE "D" - Correct Answer.

Examination Outline Cross-reference:	Level	RO
211000 SLC **A4.08** (10CFR 55.41.7) Ability to manually operate and/or monitor in the control room: • System initiation: Plant-Specific	Tier #	2
	Group #	1
	K/A #	211000A4.08
	Importance Rating	4.2

Proposed Question: **# 33**

Unit 1 is executing 1-EOI-1, "RPV Control," due to a Scram and an ATWS. The Unit Operator (UO) is directed to inject Standby Liquid Control (SLC) per 1-EOI-1 Appendix 3A, "SLC Injection."

The UO places the SLC Pump control switch in the 'Start-A' position.

Given the following plant conditions:

- SLC SQUIB VALVE CONTINUITY LOST, (1-9-5B, Window 20) — Extinguished
- AUTO SQUIB VALVE A and B CONTINUITY, blue lights — Illuminated
- SLC Pump 1A red light — Illuminated

Which ONE of the following describes the status of SLC **AND** the correct action(s) to take?

A. SLC Pump 1A has **NOT** started,
ONE squib valve has **NOT** fired,
Place SLC Pump 1A in Stop, start the SLC Pump 1B, **AND** verify proper operation.

B. SLC Pump 1A has started,
BOTH squib valves have **NOT** fired,
Place SLC Pump 1A in Stop, start the SLC Pump 1B, **AND** verify proper operation.

C. SLC Pump 1A has **NOT** started,
BOTH squib valves have **NOT** fired,
Place SLC Pump 1A in Stop **AND** dispatch personnel to the SLC area to investigate.

D. SLC Pump 1A has started,
ONE squib valve has fired,
Verify proper system operation by observing the SLC tank level lowering by ~1% per minute.

Proposed Answer: **B**

Explanation (Optional):

A INCORRECT: 'A' pump did start by indication of RED light illuminated. Neither squib valve has fired; as indicated by the lack of the alarm and the blue lights are still lit. The squib valves are arranged in Parallel, so 1 firing would allow injection into RPV. Starting 'B' would allow the squib valves to be fired from the other primer.

B **CORRECT:** 'A' pump did start by indication of RED light illuminated. Neither squib valve has fired as indicated by the lack of the alarm and the blue lights are still lit. Starting 'B' would allow the squib valves to be fired from the other primer.

C INCORRECT: 'A' pump did start by indication of RED light illuminated. It is not required in the EOI's to dispatch personnel to the area. Starting 'B' would allow the squib valves to be fired from the other primer.

D INCORRECT: 'A' pump did start by indication of RED light illuminated. Neither squib valve has fired as indicated by the lack of the alarm and the blue lights are still lit. No flow so tank level will not decrease.

Technical Reference(s): 1-EOI APPENDIX-3A rev 0 (Attach if not previously provided)

OPL171.039 rev 16 (Including version / revision number)

Proposed references to be provided to applicants during examination: NONE

Learning Objective: V.B.4 / V.B.5 (As available)

Question Source: Bank # Modified Bank # 0610 AUDIT RO Q5 (Note changes or attach parent)

Question History: New Last NRC Exam

(Optional - Questions validated at the facility since 10/95 will generally undergo less rigorous review by the NRC; failure to provide the information will necessitate a detailed review of every question.)

Question Cognitive Level: Memory or Fundamental Knowledge

Comprehension or Analysis X

10 CFR Part 55 Content: 55.41 X

55.43

Comments: The 'A' SLC pump has started and neither squib valve has fired as indicated by the lack of the alarm and the blue lights are still lit. The proper action iaw EOI-app 3A is to start the other pump and verify proper operation.

BFN UNIT 1	SLC INJECTION	1-EOI APPENDIX-3A Rev. 0 Page 1 of 2

LOCATION:	Unit 1 Control Room	
ATTACHMENTS:	None	(✓)

1. **UNLOCK** and **PLACE** 1-HS-63-6A, SLC PUMP 1A/1B, control switch in START-A or START-B position. _____

2. **CHECK** SLC System for injection by observing the following:

   - Selected pump starts, as indicated by red light illuminated above pump control switch. _____
   - Squib valves fire, as indicated by SQUIB VALVE A and B CONTINUITY blue lights extinguished, _____
   - SLC SQUIB VALVE CONTINUITY LOST 1-EA-63-8 Annunciator in alarm on Panel 1-9-5 (1-XA-55-5B, Window 20). _____
   - 1-PI-63-7A, SLC PUMP DISCH PRESS, indicates above RPV pressure. _____

   - System flow, as indicated by 1-IL-63-11, SLC FLOW, red light illuminated on Panel 1-9-5, _____
   - SLC INJECTION FLOW TO REACTOR 1-FA-63-11, Annunciator in alarm on Panel 1-9-5 (1-XA-55-5B, Window 14). _____

3. IF ..... Proper system operation CANNOT be verified,

   THEN..... **RETURN** to Step 1 and **START** other SLC pump. _____

4. **VERIFY** RWCU isolation by observing the following:

   - RWCU Pumps 1A and 1B tripped _____
   - 1-FCV-69-1, RWCU INBD SUCT ISOLATION VALVE closed _____
   - 1-FCV-69-2, RWCU OUTBD SUCT ISOLATION VALVE closed _____
   - 1-FCV-69-12, RWCU RETURN ISOLATION VALVE closed. _____

5. **VERIFY** ADS inhibited. _____

6. **MONITOR** reactor power for downward trend. _____

OPL171.039 r16

1. Explosive Valves

   a) Two 100% capacity explosive (Squib) valves, FCV 63-8A and B, are installed in parallel.

   b) Provide a zero leakage seal between the boron solution and the reactor.

   c) Each valve contains two firing primers, powered by the 250V DC control power from the 480V Shutdown Boards A and B, (unit specific).

   d) Either primer is capable of actuating the valve.

   e) The primer is fired by taking the main control room handswitch, HS-63-6A, to the START PUMP A or START PUMP B position. This forces the ram outward, which shears the end cap off the valve fitting, allowing flow to pass through the valve.

   f) After firing, the ram remains extended. This prevents the sheared cap from obstructing flow through the valve.

   g) The primer requires a minimum current of 2 amps to fire, and fires within 2 milliseconds after this circuit is applied. All the explosion by-products are retained in the trigger explosive chamber.

   h) Each valves firing circuit continuity is monitored by a blue indicating light on Panel 9-5 and a current meter located in the back of Panel 9-5.

1. Main Control Room Instrumentation (Panel 9-5)

Parameter	Device	Range	Normal Indication
SLC Storage Tank Level	Level Indicator	0 - 100%	61 - 69%
SLC Pump Disch. Pressure	Pressure Indicator	0 - 2000 psig	0 psig with system in standby, ~1250 psig with pump running
HCV-63-12 Position	Red Light	ON when valve is open	ON
HCV-63-13 Position	Green Light	ON when valve is closed	ON
HCV-63-14 Position	Green Light	ON when valve is closed	ON
Squib valve firing circuit continuity	Blue Light (One for each squib)	ON when squib valve firing power is available and circuit continuity is maintained	ON

System Flow	Red Light	ON when sensed flow downstream of squibs is >40 gpm	OFF for normal system standby
SLC Pump	Red Light (One for each pump)	ON when pump is running	OFF for normal system standby
SLC Pump	Green Light (One for each pump)	ON when pump is stopped	ON for normal system standby

Original Question; 0610 AUDIT RO # 5

Unit 1 is executing EOI-1 due to a scram and an ATWS. The RO is directed to inject SLC iaw 1-EOI-1 appendix 3A.

The RO places the SLC pump control switch in Start-A position.

Given the following plant conditions:

- SLC SQUIB VALVE CONTINUITY LOST Annunciator — Clear
- SQUIB VALVE A and B CONTINUITY blue lights — illuminated
- SLC ump A red light — illuminated
- 1-PI-63-7A SLC discharge pressure — 1450 psig

Which ONE of the following describes the status of SLC and the correct actions to take?

A. The 'A' pump has started
The squib valves have fired
Verify proper operation by observing the SLC tank level lowering by ~1% per minute.

B. The 'A' pump has started
The squib valves have not fired
Proper system operation cannot be verified
Stop 'A' SLC pump, start the 'B' SLC pump and verify proper operation

C. The 'A' pump has not started
One squib valve has not fired
Proper system operation cannot be verified
Start the 'B' SLC pump and verify proper operation

D. The 'A' pump has not started
The squib valves have not fired
Proper system operation cannot be verified
Stop 'A' SLC pump, dispatch personnel to the SLC area to investigate

Examination Outline Cross-reference:

212000 RPS

K3.11 (10CFR 55.41.7)

Knowledge of the effect that a loss or malfunction of the REACTOR PROTECTION SYSTEM (RPS) will have on the following:

- Recirculation system

Level	RO
Tier #	2
Group #	1
K/A #	212000K3.11
Importance Rating	3.0

Proposed Question: **# 34**

Which ONE of the following is **NOT** a result of loss of power to Unit 3 RPS Bus 'A'?

A. Group 2 Inboard Isolation.

B. Group 3 Inboard **AND** Outboard Isolation.

C. Recirc System Automatic 75% Limiter Runback.

D. Control Room Emergency Ventilation System Start.

Proposed Answer: **C**

Explanation (Optional):

A INCORRECT: Loss of RPS Bus 'A' will result in an Inboard Group 2 PCIS Isolation. Plausible in that could be confused with loss of RPS Bus 'B' which would cause an Outboard Isolation.

B INCORRECT: Loss of RPS Bus 'A' will result in an Inboard and Outboard Group 3 PCIS Isolation. Plausible in that could be confused with loss of RPS Bus 'B' which would cause an Outboard ONLY Isolation or may think only Inboard Isolation should occur with loss of RPS 'A'.

C **CORRECT**: Loss of RPS Bus 'A' does affect Recirculation System Automatic 75% Limiter Runback logic. However, with the loss of only one RPS Bus, only half of the logic is made up to initiate the runback so no runback occurs.

D INCORRECT: Loss of RPS Bus 'A' will result in start of Control Room Emergency Ventilation System. Plausible in that candidate may expect only half initiation logic made up on loss of RPS Bus 'A'.

Technical Reference(s): 3-AOI-99-1 Rev 16 (Attach if not previously provided)

(Including version / revision number)

Proposed references to be provided to applicants during examination: NONE

Learning Objective: _____ (As available)

Question Source:

Bank #	
Modified Bank #	
New	X

(Note changes or attach parent)

Question History:

Last NRC Exam	

(Optional - Questions validated at the facility since 10/95 will generally undergo less rigorous review by the NRC; failure to provide the information will necessitate a detailed review of every question.)

Question Cognitive Level: Memory or Fundamental Knowledge X

Comprehension or Analysis

10 CFR Part 55 Content: 55.41 X

55.43

Comments:

BFN Unit 3	Loss of Power to One RPS Bus	3-AOI-99-1 Rev. 0016 Page 4 of 8

3.0 AUTOMATIC ACTIONS (continued)

C. PCIS Group 2 isolation, RHR Shutdown Cooling Mode:

1. Bus A inboard.
2. Bus B outboard.

D. PCIS Group 3 isolation, RWCU:

1. Bus A inboard and outboard.
2. Bus B outboard.

E. PCIS Group 6 isolation, Primary Containment Vent and Purge and Reactor Building Ventilation:

1. Bus A or B inboard and outboard.

F. Group 8 isolation, TIP.

G. Control Room Emergency Ventilation System start.

H. Standby Gas Treatment System starts.

Examination Outline Cross-reference:

215003 IRM

K4.04 (10CFR 55.41.7)

Knowledge of INTERMEDIATE RANGE MONITOR (IRM) SYSTEM design feature(s) and/or interlocks which provide for the following:

- Varying system sensitivity levels using range switches

Level	RO
Tier #	2
Group #	1
K/A #	215003K4.04
Importance Rating	2.9

Proposed Question: **# 35**

Unit 3 IRM 'B' is indicating 34 on Range 7.

Which ONE of the following would result if IRM 'B' range select switch is placed to Range 6?

A. A Reactor Scram occurs.

B. A Half Reactor Scram occurs.

C. A Control Rod Withdraw Block occurs.

D. **NEITHER** a Control Rod Block **NOR** a Scram occurs.

Proposed Answer: **C**

Explanation (Optional):

A INCORRECT: Ranging IRM 'B' down to Range 6 would result in indication of 107.4 which is below the IRM Scram set point of 116.4 and only one channel would be affected.

B INCORRECT: Ranging IRM 'B' down to Range 6 would result in indication of 107.4 which is below the IRM Scram set point of 116.4.

C **CORRECT**: Ranging IRM 'B' down to Range 6 would result in indication of 107.4 which is above the IRM Rod Block set point of 104.6. Since the IRM Rod Block is non-coincidental, one channel will cause the trip.

D INCORRECT: This is incorrect as explained above. Candidate must recall that Rod Block is non-coincidental.

Technical Reference(s): OPL171.020 Rev 10 (Attach if not previously provided)

3-OI-92A Rev 15 (Including version / revision number)

Proposed references to be provided to applicants during examination: NONE

Learning Objective: _____ (As available)

Question Source:

Bank #		
Modified Bank #	X	(Note changes or attach parent)
New		

Question History: Last NRC Exam VY 07 # 10

(Optional - Questions validated at the facility since 10/95 will generally undergo less rigorous review by the NRC; failure to provide the information will necessitate a detailed review of every question.)

Question Cognitive Level: Memory or Fundamental Knowledge

Comprehension or Analysis X

10 CFR Part 55 Content: 55.41 X

55.43

Comments:

OPL171.020
Revision 10

(a) The recorder(s) only have 0-125 scale

(b) Readings on one range scale change by a factor of the square root of 10 (3.16) when the IRM is ranged up or down one range.

BFN Unit 3	Intermediate Range Monitors	3-OI-92A Rev. 0015 Page 6 of 15

3.0 PRECAUTIONS AND LIMITATIONS

G. The IRMs produce the following trip outputs to the Reactor Manual Control System rod withdrawal block circuitry:

1. High (> 104.6 on 125 scale).
2. Inop (module unplugged, mode switch not in OPERATE, HV power supply low voltage, loss of 24VDC power supply to IRM drawer).
3. Downscale (< 7.5 on 125 scale), bypassed if range switch set to position 1.
4. Detector wrong position (detector not full in).

H. The IRMs produce the following trip outputs to the Reactor Protection System auto-scram circuitry:

1. High-High (> 116.4 on 125 scale).
2. Inop (module unplugged, mode switch not in OPERATE, HV power supply low voltage, loss of 24VDC power supply to IRM drawer).
3. In addition, by removing the blue shorting links (2 total links), the IRMs are placed in the non-coincident trip logic where any <u>one</u> channel, if tripped, will produce a full reactor scram. The 2/4 Voters are also in this logic such that a trip output from any one Voter yields a full Reactor Scram.

VERMONT YANKEE 2007

Proposed Question: Common 10

IRM "B" is indicating 10 on Range 7. Which ONE (1) of the following values will IRM "B" indicate if the range switch is placed on Range 6?

A. 10

B. 40

C. 100

D. 125

Proposed Answer: C

Explanation (Optional):

A. Incorrect – not a 1 decade change
B. Incorrect - not a 1 decade change
C. Correct – scale changes by 1 decade
D. Incorrect – not a 1 decade change

Examination Outline Cross-reference:

215004 Source Range Monitor

A3.01 (10CFR 55.41.7)

Ability to monitor automatic operations of the SOURCE RANGE MONITOR (SRM) SYSTEM including:

- Meters and recorders

Level	RO
Tier #	2
Group #	1
K/A #	215004A3.01
Importance Rating	3.2

Proposed Question: **# 36**

The following plant conditions exist on Unit 2:

- Reactor Mode Switch is in STARTUP
- **ALL** Intermediate Range Monitors (IRMs) are on Range 3 or 4
- Source Range Monitor (SRM) 'A' is retracted **AND** reading 0.5 cps
- SRMs 'B' **AND** 'C' are reading 5.3 x 10^4 cps
- SRM 'D' mode switch (S-1) is in the STANDBY position

Based on the above indications, which ONE of the following has caused a Rod Block signal to be generated?

A. An SRM High.

B. An SRM **NOT** Full-In.

C. An SRM Inoperable.

D. An SRM Downscale.

Proposed Answer: **C**

Explanation (Optional):

A INCORRECT: Although SRMs B and C are approaching the Hi Flux (Upscale) Alarm set point of 6.8 x 10^4 cps, they are not yet there.

B INCORRECT: This rod block function is bypassed with > 100 cps on the respective SRM, associated IRMs on Range 3 or above, or Reactor Mode Switch in RUN.

C **CORRECT**: SRM D Mode Switch being placed in STANDBY will result in a SRM Inop alarm with a concurrent rod block. This function is not bypassed until IRM Range 8 or Reactor Mode Switch in "RUN".

D INCORRECT: Although SRM A is downscale (< 5 cps), this rod block function is bypassed with associated IRMs on Range 3 or above.

Technical Reference(s): OPL171.019 Rev 12 (Attach if not previously provided)

(Including version / revision number)

Proposed references to be provided to applicants during examination: NONE

Learning Objective: _____ (As available)

Question Source: Bank # X

Modified Bank #

New

(Note changes or attach parent)

Question History: Last NRC Exam Fitzpatrick 05 #34

(Optional - Questions validated at the facility since 10/95 will generally undergo less rigorous review by the NRC; failure to provide the information will necessitate a detailed review of every question.)

Question Cognitive Level: Memory or Fundamental Knowledge

Comprehension or Analysis X

10 CFR Part 55 Content: 55.41 X

55.43

Comments:

ORIGINAL: FITZPATRICK 2005

Proposed Question: **# 34**

The following plant conditions exist:

- Reactor Mode Switch is in "STARTUP/HOT STBY"
- All Intermediate Range Monitors (IRM's) are on Range 3 or 4
- Source Range Monitor (SRM) "Alpha" is reading 0.5 cps
- SRMs "Bravo" and "Charlie" are reading 8.3×10^4 cps
- SRM "Delta" mode switch is in "STANDBY"

A rod block signal has been generated. Based on the above indications, which one of the following has caused the rod block?

a. SRM Inoperable
b. SRM Downscale
c. SRM Upscale
d. SRM Not Full-In

(2) A Detector Wrong Position rod block will be generated if:

(a) Either SRM in that channel is not in the fully inserted position, AND

(b) The count rate on the associated SRM is less than or equal to 145 cps, AND

(c) Any of the four IRMs in that channel are not on range 3 or above, AND

(d) The reactor mode switch is not in RUN.

b. Panel 9-12

(d) Standby position - Same as the Operate position, except that it causes an Inop Trip signal. This trip signal will initiate a control rod block unless the mode switch is in RUN OR the associated IRM channels are on range 8 or above.

b. Alarms, Interlocks, Trips and Annunciators

Annunciator/Function	Setpoint	Bypassed
SRM Hi(Alarm and Rod Block)	6.8×10^4	IRM range 8 or above, OR in Run Mode
INOP(Alarm and Rod Block)		IRM range 8 or above, OR in Run Mode

(1) module unplugged;

(2) switch not in Operate

(3) HV Power supply voltage Low

(4) Loss of +/- 24 VDC power supply

SRM DOWNSCALE (Alarm and Rod Block)	<5cps	IRM range 3 or in RUN Mode

Examination Outline Cross-reference:

215005 APRM / LPRM

A2.07 (10CFR 55.41.5)

Ability to (a) predict the impacts of the following on the AVERAGE POWER RANGE MONITOR / LOCAL POWER RANGE MONITOR (APRM / LPRM) SYSTEM; and (b) based on those predictions, use procedures to correct, control, or mitigate the consequences of those abnormal conditions or operations:

- Recirculation flow channels flow mismatch

Level	RO
Tier #	2
Group #	1
K/A #	215005A2.07
Importance Rating	3.2

Proposed Question: **# 37**

Unit 1 is at 85% Reactor Power **AND** 75% Core Flow performing a control rod shuffle for establishing a new Load Line. The RECIRC LOOP 'A' FLOW TRANSMITTER TO APRM 1, 1-FT-68-5A, fails to zero.

Which ONE of the following completes the statement?

The alarms received from this failure are __**(1)**__ **AND** the required Operator action(s) is to __**(2)**__.

A. **(1)** APRM UPSCALE **AND** OPRM TRIP ENABLED
(2) bypass **ONLY** APRM 1.

B. **(1)** APRM HIGH /INOP OR OPRM TRIP **AND** OPRM TRIP ENABLED
(2) bypass **ONLY** APRM 1.

C. **(1)** APRM UPSCALE **AND** APRM FLOW BIAS OFF NORMAL
(2) bypass APRM 1 **AND** RBM 'A'.

D. **(1)** APRM HIGH /INOP OR OPRM TRIP **AND** APRM FLOW BIAS OFF NORMAL
(2) bypass APRM 1 **AND** RBM 'A'.

Proposed Answer: **B**

Explanation (Optional):

A INCORRECT: APRM UPSCALE, Window 11, would only alarm from a HIGH condition. Uses .66w + 59% to calculate setpoint. With (w) being flow. OPRM TRIP ENABLED is alarmed, due to only ½ of the flow is sensed. (Uses Total Recirc Flow signals) CORRECT: RBM A is not bypassed. The RBM automatically substitutes an alternate reference APRM flux level and STP level when the primary reference APRM channel is bypassed or inoperable. The RBM trip points are power biased, not flow biased.

B **CORRECT:** APRM HIGH /INOP OR OPRM TRIP, Window 25 (INOP portion). OPRM TRIP ENABLED is alarmed, due to only ½ of the flow is sensed. (Uses Total Recirc Flow signals). CORRECT: APRM 1 is only instrument required to be bypassed. The RBM automatically substitutes an alternate reference APRM flux level and STP level when the primary reference APRM channel is bypassed or inoperable, therefore does not require bypassing.

C INCORRECT: APRM UPSCALE, Window 11, would only alarm from a HIGH condition. Uses .66w + 59% to calculate setpoint. With (w) being flow. APRM FLOW BIAS OFF NORMAL, Window 32, generated by flow at 107% or failed upscale. RBM only uses the STP or RECIRC FLOW HIGH input to generate trips. The RBM automatically substitutes an alternate reference APRM flux level and STP level when the primary reference APRM channel is bypassed or inoperable. The RBM trip points are power biased, not flow biased.

D INCORRECT: APRM FLOW BIAS OFF NORMAL, Window 32, is generated by flow at 107% or failed upscale. Not the case here, this transmitter fails downscale. INCORRECT: APRM 1 is only instrument required to be bypassed. The RBM automatically substitutes an alternate reference APRM flux level and STP level when the primary reference APRM channel is bypassed or inoperable, therefore does not require bypassing.

Technical Reference(s): 171.148 Rev 9, pages 111 and 112 (Attach if not previously provided)
1-9-5A Rev 12, pages 15, 31, 38, 40 (Including version / revision number)
1-OI-92C Rev 8

Proposed references to be provided to applicants during examination: NONE

Learning Objective: _____ (As available)

Question Source:

Bank #	0606 NRC SRO
Modified Bank #	
New	

(Note changes or attach parent)

Question History: Last NRC Exam 0606 NRC

(Optional - Questions validated at the facility since 10/95 will generally undergo less rigorous review by the NRC; failure to provide the information will necessitate a detailed review of every question.)

Question Cognitive Level: Memory or Fundamental Knowledge
Comprehension or Analysis X

10 CFR Part 55 Content: 55.41 X
55.43

Comments: Distracters provide choices that are alarm indications that would be received if the failure mode of the flow channel had been **upscale**, or use the misconception that RBM rod blocks are still provided from a flow biased algorithm.

BFN Unit 1	Panel 9-5 1-XA-55-5A	1-ARP-9-5A Rev. 0012 Page 40 of 43

APRM FLOW BIAS OFF NORMAL 32	Sensor/Trip Point: APRM Channel 1, 2, 3, 4 FLOW ≥ 107% or failed.	Either APRM Channel Recirc Flow 107% or has failed upscale.

(Page 1 of 1)

BFN Unit 1	Panel 9-5 1-XA-55-5A	1-ARP-9-5A Rev. 0012 Page 31 of 43

APRM HIGH/INOP OR OPRM TRIP 25	Sensor/Trip Point: APRM:	C. HIGH. 1. (0.66W + 65%) Two Loop operation with Rx MODE Switch in Run. 2. 14.0% with Rx Mode Switch not in RUN. 3. 119% in any mode. 4. (0.66(W-10%)+65%) Single loop operation with Mode Switch in RUN. D. INOP. 1. APRM Chassis Mode switch not in OPERATE. 2. Loss of input power. 3. Watchdog timer timed out. 4. Critical self test fault detected.
	OPRM TRIP:	Any one of the three algorithms, period, growth, or amplitude for an operable OPRM Cell has exceeded its trip value conditions.

(Page 1 of 1)

BFN Unit 1	Panel 9-5 1-XA-55-5A	1-ARP-9-5A Rev. 0012 Page 38 of 43

OPRM TRIP ENABLED 30	Sensor/Trip Point: Relay K6 A4K4 in 2/4 LOGIC MODULE (VOTERS)	Total Recirc Flow (driven) < 60% and STP ≥ 25%

(Page 1 of 1)

BFN Unit 1	Panel 9-5 1-XA-55-5A	1-ARP-9-5A Rev. 0012 Page 15 of 43

APRM UPSCALE 11	Sensor/Trip Point: Relay K14 A6K1 in 2/4 Logic Module (Voters)	.66w + 59% (Rx Mode Sw. in Run) 10% with Rx Mode Sw. **NOT** in Run 113% Neutron Flux Clamped Single loop operation with Mode Switch in RUN (0.66 (W-10%) + 59%)

(Page 1 of 1)

OPL171.148 r9

Let's fail one transmitter (for B recirc loop) in APRM channel 3. A flow compare alarm is initiated by the RBM. For APRM channel 3, it is only seeing approximately ½ of the original total recirc flow signal. This exceeds the flow compare set point. Also, the flow indicator signal on panel 9-4 is lost. The APRM channel 3 flow biased alarm and trip signal is also reduced by this reduction in total flow. The other channels are NOT affected. OPRM trips and alarms are enabled at this point as well, since any ONE total recirc flow dropping below the set point will enable this function.

Examination Outline Cross-reference:	Level	RO
217000 RCIC **K3.02** (10CFR 55.41.7) Knowledge of the effect that a loss or malfunction of the REACTOR CORE ISOLATION COOLING (RCIC) SYSTEM will have on the following: • Reactor vessel pressure	Tier #	2
	Group #	1
	K/A #	217000K3.02
	Importance Rating	3.6

Proposed Question: **# 38**

A Seismic Event at Browns Ferry occurred approximately 15 minutes ago, resulting in the following Unit 2 conditions:

- Damage to Drywell Control Air Header including discharge of **ALL** Accumulators
- Torus Area Temperature is 155° F and stable
- Loop I Core Spray Pump Room Temperature is 172° F and rising
- Loss of **ALL** EHC Pumps

Based on current plant conditions **AND** in accordance with 2-EOI-1, "RPV Control," which ONE of the following identifies the **AVAILABLE** means of Reactor Pressure Control?

A. Steam Seal System.

B. Reactor Core Isolation Cooling System.

C. High Pressure Coolant Injection System.

D. Offgas Preheater **AND** Steam Jet Air Ejector.

Proposed Answer: **C**

Explanation (Optional):

A INCORRECT: With the loss of Control Air to the Drywell and damage to the header, MSIVs will fail closed. With the MSIVs closed Seal Steam System is not available for pressure control. Plausible in that this is one of the systems listed in 2-EOI-1 for pressure control. With the loss of SRVs and bypass valves this would be a system considered by the candidates.

B INCORRECT: RCIC receives an isolation signal with Torus Area Temp > 147 ° F and is therefore not available for pressure control. Plausible in that this is one of the systems listed in 2-EOI-1 for pressure control. With the loss of SRVs and bypass valves this would be a system considered by the candidates. Also, the candidate could confuse the set point for this isolation with that of HPCI which occurs at > 170 ° F.

C **CORRECT**: HPCI system receives an isolation signal with Torus Area Temp > 170 ° F and therefore has not isolated. HPCI is one of the systems listed in 2-EOI-1 for pressure control. With the loss of SRVs, RCIC and MSIVs closed, this remains the only one of the options listed available for pressure control.

D INCORRECT: With the loss of Control Air to the Drywell and damage to the header, MSIVs will fail closed. With the MSIVs closed Seal Steam System is not available for pressure control. Plausible in that this is one of the systems listed in 2-EOI-1 for pressure control. With the loss of SRVs and bypass valves this would be a system considered by the candidates.

Technical Reference(s): OPL171.040 Rev 22/ 2-EOI-1 Rev 12 (Attach if not previously provided)

OPL171.042 Rev 19 (Including version / revision number)

Proposed references to be provided to applicants during examination: NONE

Learning Objective: _____ (As available)

Question Source: Bank # _____

Modified Bank # _____ (Note changes or attach parent)

New X

Question History: Last NRC Exam _____

(Optional - Questions validated at the facility since 10/95 will generally undergo less rigorous review by the NRC; failure to provide the information will necessitate a detailed review of every question.)

Question Cognitive Level: Memory or Fundamental Knowledge

Comprehension or Analysis X

10 CFR Part 55 Content: 55.41 X

55.43

Comments:

AUGMENT RPV PRESS CONTROL AS NECESSARY WITH ONE OR MORE OF THE FOLLOWING DEPRESSURIZATION SYSTEMS

DEPRESSURIZATION SYSTEM	APPX
MSRVs ONLY WHEN SUPPR LVL IS ABOVE 5.5 FT IF . . . "MAIN STEAM RELIEF VLV AIR ACCUM PRESS LOW" ANNUNCIATOR (XA-55-3D-18) IS IN ALARM THEN . **PLACE** EACH MSRV CONTROL SWITCH IN CLOSE/AUTO AND **PLACE** MSRV AUTO ACTUATION LOGIC INHIBIT XS-1-202 TO INHIBIT	11A
HPCI WITH CST SUCTION IF POSSIBLE	11C
RCIC WITH CST SUCTION IF POSSIBLE	11B
RFPTs ON MIN FLOW	11F
MAIN STEAM SYSTEM DRAINS	11D
STEAM SEALS	11G
SJAEs	11G
OFF GAS PREHEATER	11G
RWCU IF NO BORON HAS BEEN INJECTED	11E

RC/P-11

OPL171.040
Revision 22

5. System Steam Supply Isolation

   a. Signals
      (1) Low reactor pressure (U2 – 73 psig; U3 – 60 psig)

      Protects against gland seal leakage to RCIC Room when RCIC pump not capable of supplying cooling water to barometric condenser

      (2) Steam line high flow (150% of normal, 421" water gauge WP after 3-second time delay) Protects against a steam line break

      (3) High turbine exhaust diaphragm pressure (10 psig) Steam in RCIC Room from diaphragm rupture

      (4) High temperature in steam space (147°F Torus Area, 160°F pump room) Protects against a steam line break.

      (5) Manual pushbutton provided on Panel 9-3 to allow operator to isolate RCIC with a valid initiation signal present.

OPL171.042
Revision 19

1. HPCI Isolation

   a. Conditions causing HPCI isolation

      (1) Low reactor pressure 105 psig (one out of two twice). 110 psig for Unit 1. DCN 51237

      (2) High HPCI area temperature ≥170°F (Torus Area) or ≥190°F (HPCI Pump Room) (one out of two twice)

Examination Outline Cross-reference:	Level	RO
217000 RCIC	Tier #	2
K3.04 (10CFR 55.41.7)	Group #	1
Knowledge of the effect that a loss or malfunction of the REACTOR CORE ISOLATION COOLING (RCIC) SYSTEM will have on the following:	K/A #	217000K3.04
• Adequate core cooling	Importance Rating	3.6

Proposed Question: **# 39**

On Unit 3 an instrument line connected to the Reactor Pressure Vessel (RPV) has ruptured inside Containment. The following plant conditions exist:

- Eight peripheral Control Rods are at position 48 with Reactor Power lowering on Range 3 of the IRMs
- Reactor Pressure is 970 psig lowering slowly, with pressure control on the MSRVs and **NO** MSRVs open
- RCIC **AND** CRD are the **ONLY** available High Pressure injection sources with **ALL** Low Pressure ECCS Systems operable
- RCIC injection at 600 gpm is able to keep up with the constant leak rate **AND** Reactor Water Level is (-) 30 inches and stable

A subsequent loss of the Division I ECCS Inverter occurs. Given this occurrence, which ONE of the following completes the statement?

Upon losing the Inverter, RCIC will __**(1)**__ **AND** if current plant trends continue, then __**(2)**__.

A. **(1)** stop injecting to the reactor as the RCIC Flow Controller fails downscale
(2) Emergency Depressurization will be necessary per 3-C-5, "Level/Power Control," to ensure adequate core cooling.

B. **(1)** continue injecting to the reactor at 600 gpm without any adverse impact
(2) RCIC will ensure adequate core cooling as it is credited in the safety analyses for the small-break LOCA.

C. **(1)** stop injecting to the reactor; requiring execution of 3-EOI Appendix 5B, "Injection System Lineup CRD"
(2) Emergency Depressurization will be necessary per 3-C-1, "Alternate Level Control," to ensure adequate core cooling.

D. **(1)** continue injecting to the reactor at maximum flow with limited system indications available in the Control Room
(2) RCIC will ensure adequate core cooling by maintaining Reactor Water Level above Top of Active Fuel (TAF).

Proposed Answer: **D**

Explanation (Optional):

A INCORRECT: This question plays on unit differences. This distractor would be the result on Unit 2; as the EGM control power for this unit comes directly from the battery boards (versus the Inverter). Thus, and providing that RCIC is already running, upon loss of the Div I Inverter, the flow controller failing downscale would drive RCIC Turbine Speed to minimum. Because rods are out, and NO high pressure systems are available, Emergency Depressurization would be required (from C-5 in this case) upon not being able to maintain level above TAF.

B INCORRECT: This distractor would be chosen by the candidate if they thought that RCIC was a Division II system (often confused with HPCI). Additionally, making it incorrect is the reference to the safety analyses crediting RCIC for the small-break LOCA. In fact, RCIC is for MSIV Closure and/or Loss of Feedwater. HPCI is for the small-break LOCA.

C INCORRECT: A different twist to the same idea as distractor "A." On Units 1&2, RCIC would in fact stop injecting to the reactor in this condition. Appendix 5B, effectively maximizing CRD flow CANNOT be accomplished due to the fact that rods are out. Additionally and for the same reason, if ED were required, it would be accomplished via C-5 versus C-1.

D **CORRECT:** This question plays on unit differences. On Units 1&3, the power supply to the EGM Control along with the Flow Controller and multiple RCIC Control Room indications is the Div I ECCS Inverter. With RCIC running, upon loss of the Div I Inverter, the flow controller fails downscale and would normally drive RCIC Turbine Speed to minimum. But, because the EGM Control is also off the Inverter and RCIC is a throttle-down system, the governor fails wide open and RCIC will be injecting at the maximum flow it could obtain. Indications, including flowrate and turbine speed are not available in the Control Room, as they have lost power; but, the Testable Check Valve is open indicating flow to the reactor. The stem of the question indicates that RCIC is just able to keep up with the "constant leak rate." Once the Inverter is lost, RCIC is injecting at GREATER THAN 600 gpm and should have NO trouble keeping fuel covered.

Technical Reference(s): 1/2/3-AOI-57-11 rev 1/8/9 page 28/27/26 (Attach if not previously provided)

(Including version / revision number)

Proposed references to be provided to applicants during examination: NONE

Learning Objective: _____ (As available)

Question Source:

Bank #	
Modified Bank #	
New	X

(Note changes or attach parent)

Question History:

Last NRC Exam	

(Optional - Questions validated at the facility since 10/95 will generally undergo less rigorous review by the NRC; failure to provide the information will necessitate a detailed review of every question.)

Question Cognitive Level: Memory or Fundamental Knowledge

Comprehension or Analysis X

10 CFR Part 55 Content: 55.41 X

55.43

Comments:

BFN Unit 1	Loss of Power to An ECCS ATU Panel / ECCS Inverter	1-AOI-57-11 Rev. 0001 Page 28 of 30

Illustration 3
(Page 1 of 2)

Technical Specifications for Reference Use on Loss of Division I ECCS Inverter

INSTRUMENT	APPLICABLE T.S.	FUNCTION	REMARKS	REQUIRED ACTIONS
1-FIC-71-36A & EGM	3.5.3	RCIC Flow Controller in Main Control Room and EGM Control Box	RCIC is Inoperable.	Required Action A - Verify by administrative means HPCI operable and return RCIC to operable status within 14 days. (Applicable in Mode 1 and Modes 2 & 3 with reactor steam dome pressure > 150 psig.)
1-FIC-71-36B	3.3.3.2	7 - RCIC Flow Controller at Backup Control Center	Loss of function	Required Action A - Restore functions to operable status within 30 days. (Applicable in Modes 1 and Mode 2.)
1-SI-71-42B	3.3.3.2	8 - RCIC Speed Indication at Backup Control Center	Loss of function	Required Action A - Restore functions to operable status within 30 days. (Applicable in Modes 1 and Mode 2.)
Channel A of the RFPT & Main Turbine High Water Level Trip Logic	3.3.2.2	Channel A RFPT & Main Turbine High Water Level Trip Logic +54 inches	Loss of both channels in one trip system of trip logic for RFPT & Main Turbine High Water Level	Required Action A - Place channel in trip within 7 days. (Applicable when thermal power is > 25% RTP.)
1-TI-64-161 & 1-TR-64-161	3.3.3.1	8 - Suppression Pool Water Temperature	Loss of one required channel for Suppression Pool Water Temperature	Required Action A - Restore channel to operable status within 30 days. (Applicable in Modes 1 and 2.)

BFN Unit 2	Loss of Power to an ECCS ATU Panel/ECCS Inverter	2-AOI-57-11 Rev. 0008 Page 27 of 31

Illustration 3
(Page 1 of 2)

Technical Specifications for Reference Use on Loss of Division I ECCS Inverter

INSTRUMENT	APPLICABLE T.S.	FUNCTION	REMARKS	REQUIRED ACTIONS
FIC-71-36A	3.5 3	RCIC Flow Controller in Main Control Room	RCIC is inoperable.	**Required Action A** - Verify by administrative means HPCI operable and return RCIC to operable status within 14 days. (Applicable in Mode 1 and Modes 2 & 3 with reactor steam dome pressure > 150 psig.)
FIC-71-36B	3.3.3.2	**7** - RCIC Flow Controller at Backup Control Center	Loss of function	**Required Action A** - Restore functions to operable status within 30 days. (Applicable in Modes 1 and Mode 2.)
SI-71-42B	3.3.3.2	**8** - RCIC Speed Indication at Backup Control Center	Loss of function	**Required Action A** - Restore functions to operable status within 30 days. (Applicable in Modes 1 and Mode 2.)
Channel A of the RFPT & Main Turbine High Water Level Trip Logic	3.3 2.2	**Channel A** of the RFPT & Main Turbine High Water Level Trip Logic	Loss of both channels in one trip system of trip logic for RFPT & Main Turbine High Water Level	**Required Action A** - Place channel in trip within 7 days. (Applicable when thermal power is ≥ 25% RTP.)
TI-64-161 & TR-64-161	3.3 3.1	**8** - Suppression Pool Water Temperature	Loss of one required channel for Suppression Pool Water Temperature	**Required Action A** - Restore channel to operable status within 30 days. (Applicable in Modes 1 and 2.)

BFN Unit 3	Loss of Power to An ECCS ATU Panel / ECCS Inverter	3-AOI-57-11 Rev. 0009 Page 26 of 30

Illustration 3
(Page 1 of 2)

Technical Specifications for Reference Use on Loss of Division I ECCS Inverter

INSTRUMENT	APPLICABLE T.S.	FUNCTION	REMARKS	REQUIRED ACTIONS
FIC-71-36A & EGM	3.5.3	RCIC Flow Controller in Main Control Room and Woodward Governor	RCIC is inoperable.	*Required Action A* - Verify by administrative means HPCI operable and return RCIC to operable status within 14 days. *(Applicable in Mode 1 and Modes 2 & 3 with reactor steam dome pressure > 150 psig.)*
FIC-71-36B	3.3.3.2	**7** - RCIC Flow Controller at Backup Control Center	Loss of function	*Required Action A* - Restore functions to operable status within 30 days. *(Applicable in Modes 1 and Mode 2.)*
SI-71-42B	3.3.3.2	**8** - RCIC Speed Indication at Backup Control Center	Loss of function	*Required Action A* - Restore functions to operable status within 30 days. *(Applicable in Modes 1 and Mode 2.)*
Channel A of the RFPT & Main Turbine High Water Level Trip Logic	3.3.2.2	Channel A of the RFPT & Main Turbine High Water Level Trip Logic	Loss of both channels in one trip system of trip logic for RFPT & Main Turbine High Water Level	*Required Action A* - Place channel in trip within 7 days. *(Applicable when thermal power is > 25% RTP.)*
TI-64-161 & TR-64-161	3.3.3.1	**8** - Suppression Pool Water Temperature	Loss of one required channel for Suppression Pool Water Temperature	*Required Action A* - Restore channel to operable status within 30 days. *(Applicable in Modes 1 and 2.)*
LI-64-54B	3.3.3.2	**4** - Suppression Pool Level Indication	Loss of function	*Required Action A* - Restore functions to operable status within 30 days. *(Applicable in Modes 1 and Mode 2.)*

AUGMENT RPV WATER LVL CONTROL AS NECESSARY WITH ONE OR MORE OF THE FOLLOWING INJ SOURCES:

INJ SOURCE	APPX	INJ PRESS
SLC (TEST TANK)	7B	1450 PSIG
SLC (BORON TANK)	7B	1450 PSIG
CNDS TRANSFER PUMPS TO RHR AND CS	7A	110 PSIG
RHR CROSSTIE TO OTHER UNITS	7C	320 PSIG
STBY COOLANT	7D	160 PSIG
RHR DRAIN PUMPS	7E, 7F	50 PSIG
PSC HEAD TANK PUMPS	7G	30 PSIG
RCIC (AUX BOILER STEAM) WITH CST SUCTION IF POSSIBLE	7H	1240 PSIG
HPCI (AUX BOILER STEAM) WITH CST SUCTION IF POSSIBLE	7J	780 PSIG
FIRE PROTECTION SYSTEM	7K	150 PSIG

RCA-8

CAN RPV WATER LVL BE RESTORED AND MAINTAINED ABOVE -162 IN

RCL-9

NO

YES

EXIT RCL AND
ENTER C1, ALTERNATE LEVEL CONTROL

RCL-10

C1, ALTERNATE LEVEL CONTROL

C1-1

RCA-3

C1, ALTERNATE LEVEL CONTROL

C1-2

C4, RPV FLOODING

C4-1

CAUTION

#1 AMBIENT TEMP MAY AFFECT RPV WATER LVL INDICATION AND TREND

INHIBIT ADS

C1-2

WHILE EXECUTING THIS PROCEDURE:

IF	THEN
[illegible]	[illegible]
[illegible]	[illegible]
[illegible]	[illegible]
[illegible]	[illegible]

C1-2

WHILE EXECUTING STEPS C1-4 THROUGH C1-17:

CAUTION

#1 AMBIENT TEMP MAY AFFECT RPV WATER LVL INDICATION AND TREND

WHILE EXECUTING THIS PROCEDURE:

IF	THEN
EMERGENCY RPV DEPRESSURIZATION IS REQUIRED	CONTINUE AT STEP C1-19 E
RPV WATER LVL CANNOT BE DETERMINED	EXIT THIS PROCEDURE AND ENTER C4, RPV FLOODING
THE REACTOR WILL REMAIN SUBCRITICAL WITHOUT BORON UNDER ALL CONDITIONS (SEE NOTE)	EXIT THIS PROCEDURE AND ENTER 3-C-1, RPV CONTROL AT STEP RCL-1
PC WATER LVL CANNOT BE MAINTAINED BELOW 90 FT OR SUPPR CHMBR PRESS CANNOT BE MAINTAINED BELOW 50 PSIG	STOP ALL NON-ESSENTIAL RPV INJECTION SOURCES EXTERNAL TO THE PC NOT REQUIRED FOR ADEQUATE CORE COOLING

1

C5-1

INHIBIT ADS

C1-2

ANY MSIV STEAM LINE OPEN

C5-2

NO

YES

3-EOI-1 PAGE 1 OF 1

RPV CONTROL

UNIT 3
BROWNS FERRY
NUCLEAR PLANT

REV: 8

3-C-1 PAGE 1 OF 1

ALTERNATE LEVEL CONTROL

UNIT 3
BROWNS FERRY
NUCLEAR PLANT

REV: 9

3-C-5 PAGE 1 OF 1

LEVEL / POWER CONTROL

UNIT 3
BROWNS FERRY
NUCLEAR PLANT

REV: 9

Examination Outline Cross-reference:	Level	RO
218000 ADS **K1.02** (10CFR 55.41.5) Knowledge of the physical connections and/or cause-effect relationships between the AUTOMATIC DEPRESSURIZATION SYSTEM (ADS) and the following: • Low pressure core spray: Plant-Specific	Tier #	2
	Group #	1
	K/A #	218000K1.02
	Importance Rating	4.0

Proposed Question: **# 40**

A Recirculation Loop leak results in Unit 2 Drywell Pressure of 2.5 psig.

Six minutes later, plant conditions are as follows:

- Reactor water level is (-) 110 inches and lowering slowly
- Drywell pressure is 5.1 psig

A Unit Operator manually starts Core Spray Pumps 2A **AND** 2C.

Which ONE of the following identifies the status of ADS?

A. ADS 95-second timer is still reset (i.e., has **NOT** yet started).

B. ADS Valves will open **IMMEDIATELY** after the Core Spray Pumps starts.

C. ADS Valves are closed but will open 95 seconds after the Core Spray Pumps start.

D. ADS Valves are closed but will open **IMMEDIATELY** when Reactor Level reaches Level 1.

Proposed Answer: **A**

Explanation (Optional):

A **CORRECT**: Following conditions must be met before ADS Initiation will occur: Two coincidental signals of High Drywell Pressure 2.45 psig and Reactor Level 1 (-) 122 inches or Reactor Level 1 (-) 122 inches for 265 seconds plus confirmatory low Reactor Level (+) 2 inches and any RHR Pump or either A or B and C or D Core Spray Pumps running. This answer is correct because the Level 1 initiation signal has not been satisfied.

B INCORRECT: This is incorrect because although 1 RHR or 2 Core Spray pumps must be running, ADS will not initiate until RPV level reaches Level 1. Plausible in that candidate may confuse Level 1 for 265 seconds with High Drywell Pressure for more than 265 seconds and that conditions all ready met to start the 95 second timer.

C INCORRECT: The 95 second time delay does not start until three indications are provided (reactor vessel ≤ (+) 2 inches, and reactor vessel ≤ (-) 122 inches, and Drywell pressure ≥ 2.45 psig, or at or ≤ (-) 122 inches for 265 seconds. Plausible in that candidate may confuse Level 1 for 265 seconds with High Drywell Pressure for more than 265 seconds.

D INCORRECT: This is incorrect because when level 1 is reached, the 95 second timer has to run out before ADS will initiate. Plausible if candidate thinks conditions all ready met for 95 second timer to start

Technical Reference(s): OPL171.043 Rev 13 (Attach if not previously provided)

(Including version / revision number)

Proposed references to be provided to applicants during examination: NONE

Learning Objective: _____ (As available)

Question Source: Bank # X

Modified Bank #

New

(Note changes or attach parent)

Question History: Last NRC Exam GGNS 09 #39

(Optional - Questions validated at the facility since 10/95 will generally undergo less rigorous review by the NRC; failure to provide the information will necessitate a detailed review of every question.)

Question Cognitive Level: Memory or Fundamental Knowledge

Comprehension or Analysis X

10 CFR Part 55 Content: 55.41 X

55.43

Comments:

5. Automatic Depressurization Initiation Logic

a. The following conditions must be met before automatic depressurization will occur — Obj. V.B.4, Obj. V.C.3

1) Two coincident signals of high drywell pressure (+2.45 psig) and low low low reactor vessel — Obj. V.D.3, Obj. V.E.4

INSTRUCTOR NOTES

water level (-122")
OR
-122" for 265 sec. — LT-3-58A-D

2) A confirmatory low reactor vessel water level signal (+2") (Tech Spec Value 0") — LT-3-184, LT-3-185

3) Any one of the four RHR pumps or either A or B and either C or D Core Spray pumps running — Obj. V.C.4, Obj. V.D.4

GGNS 2009
Question 39

A major reactor coolant system leak begins in the drywell.

Ten minutes later, plant conditions are as follows:

- Reactor water level is -140" and lowering slowly
- Drywell pressure is 1.3 psig
- RPV pressure is 650 psig
- RCIC is injecting into the RPV

A control room operator manually starts the LPCS pump.

Assuming ADS has not been inhibited, the ADS:

A. 105-second timer is still reset (i.e., has not yet started).

B. 105-second timer started immediately following the LPCS pump start.

C. valves opened immediately following the LPCS pump start.

D. valves are still closed but will immediately open when RPV level reaches Level 1.

Answer: A

Explanation:

A. This is correct because the Level 1 initiation signal has not been satisfied.

B. This is incorrect the 105 second time delay does not start until three indications are provided (reactor vessel ≤ +11.4", and reactor vessel ≤ -150.3", and Drywell pressure ≥ 1.39 psig, or at or below -150.3" for 9.2 minutes).

C. This is incorrect because although one low pressure ECCS pump must be running, ADS will not initiate until RPV level reaches Level 1 with 9.2 minute time delay, or >1.39 psig in DW, plus 105 sec time delay.

D. This is incorrect because when level 1 is reached, the 9.2 minute timer second time delay will initiate; otherwise, must have >1.39 psig in DW to start the 105-second timer.

Examination Outline Cross-reference:	Level	RO
223002 PCIS/Nuclear Steam Supply Shutoff	Tier #	2
K1.03 (10CFR 55.41.5)	Group #	1
Knowledge of the physical connections and/or cause-effect relationships between the PRIMARY CONTAINMENT ISOLATION SYSTEM (PCIS) / NUCLEAR STEAM SUPPLY SHUT-OFF and the following:	K/A #	223002K1.03
• Plant ventilation	Importance Rating	3.0

Proposed Question: **# 41**

Unit 1 is operating at 100% Reactor Power when a Loss of Offsite Power results in the following plant conditions:

- 1-EOI-1, "RPV Control," is entered on low Reactor Water Level
- 1-EOI-2, "Primary Containment Control," is entered on High Drywell Pressure
- 1-EOI-3, "Secondary Containment Control," is entered on Secondary Containment $\triangle p$
- Reactor Building Ventilation is restarted as directed by 1-EOI-3, "Secondary Containment Control"
- Drywell pressure is now 1.2 psig and steady
- Reactor Water Level is restored and being maintained at (+) 20 inches

Which ONE of the following conditions would cause the Reactor Zone Ventilation to re-isolate?

A. Drywell Pressure rises above 2.45 psig.

B. Reactor Water Level lowers to less than (+) 2 inches.

C. Reactor Zone Exhaust Radiation rises above 72 mr/hr.

D. Refuel Floor Zone Exhaust Radiation rises above 72 mr/hr.

Proposed Answer: **C**

Explanation (Optional):

A INCORRECT: Although the Group 6 isolation may have been initiated by high drywell pressure, that initiation set point was bypassed by EOI Appendix 8E in order to restart ventilation BEFORE drywell pressure lowered below 2.45 psig. Therefore, high drywell pressure will no longer initiate a Group 6 isolation.

B INCORRECT: Although the Group 6 isolation may have been initiated by low RPV level, that initiation set point was bypassed by EOI Appendix 8E in order to restart ventilation BEFORE RPV level rose above (+) 2 inches. Therefore, Reactor Level Low will no longer initiate a Group 6 isolation.

C **CORRECT:** EOI Appendix 8E only bypasses the High Drywell Pressure and Low RPV Level initiations for a Group 6 isolation. High exhaust radiation above 72 mr/hr will still initiate a Reactor Zone & Refuel Zone ventilation isolation.

D INCORRECT: High refuel floor exhaust radiation will initiate an isolation of only the Refuel Zone ventilation, but will not effect Reactor Zone ventilation.

Technical Reference(s): 1-OI-30B Rev 29, 1-OI-30A Rev 30 (Attach if not previously provided)

1-AOI-64-2D Rev 17 (Including version / revision number)

Proposed references to be provided to applicants during examination: NONE

Learning Objective: V.B.4 (As available)

Question Source: Bank # _____

Modified Bank # 0707 NRC #36 (Note changes or attach parent)

New

Question History: Last NRC Exam BF 0707 NRC

(Optional - Questions validated at the facility since 10/95 will generally undergo less rigorous review by the NRC; failure to provide the information will necessitate a detailed review of every question.)

Question Cognitive Level: Memory or Fundamental Knowledge

Comprehension or Analysis X

10 CFR Part 55 Content: 55.41 X

55.43

Comments:

BFN Unit 1	Refueling Zone Ventilation System	1-OI-30A Rev. 0030 Page 7 of 32

3.0 PRECAUTIONS AND LIMITATIONS

A. The Refueling Zone Ventilation System is required to be operated in a manner such that the area pressure will NOT exceed 0.5 inch negative water pressure.

B. A WO should be submitted to have Refueling Zone inlet filters replaced when the inlet DP rises to 0.6 inch H_2O.

C. Refueling Zone supply and exhaust fans should be operating prior to startup of Reactor Zone supply and exhaust fans.

D. During cold weather operation, the air wash associated valves should be lined up for freeze protection. REFER TO 0-GOI-200-1.

E. The Refueling Zone supply and exhaust fans will automatically shut down due to any one of the following:

1. Refueling Zone high radiation.
2. Drywell high pressure.
3. Reactor low water level.
4. Refueling Zone high or low pressure.
5. Reactor zone high radiation.

F. Normal operations (NOT Refuel Mode) has the Unit 1 refueling dampers in the following positions:

DAMPER	LABELED POSITION	ACTUAL DAMPER POSITION
1-DMP-064-0501 RX CAVITY EXH DMPR	NORMAL OPERATING POSITION	FULLY CLOSED
1-DMP-064-0502 FUEL STRG POOL EXH DMPR	NORMAL OPERATING & REFUEL POSITION	FULLY OPEN
1-DMP-064-0503 NEW FUEL STRG EXH DMPR	NORMAL OPERATING & REFUEL POSITION	FULLY OPEN
1-DMP-064-0504 DRYER & SEP STRG POOL EXH DMPR	NORMAL OPERATING POSITION	FULLY CLOSED
1-DMP-064-0505 RFF EXH DMPR	NORMAL OPERATING & REFUEL POSITION	THROTTLED

BFN Unit 1	Reactor Zone Ventilation System	1-OI-30B Rev. 0029 Page 7 of 34

3.0 PRECAUTIONS AND LIMITATIONS

A. The Reactor Zone Ventilation System should be operated in a manner such that no area will exceed 0.5 inch negative water pressure.

B. A WO should be submitted to have Reactor Zone inlet filters replaced when the differential pressure across the filters rises to 0.6 inch water.

C. Refueling Zone supply and exhaust fans should be operating prior to startup of Reactor Zone supply and exhaust fans to establish negative refuel zone pressure prior to start of reactor zone fans.

D. During cold weather operation, the air wash and Air Wash Pump B and associated valves should be lined up for freeze protection. REFER TO 0-GOI-200-1.

E. Whenever primary containment is required, the Reactor Zone Ventilation System should be restored to service as soon as possible following a Reactor Building isolation to prevent a possible main steam line tunnel high temperature Group I isolation.

F. When the Reactor Zone Ventilation System is out of service and primary containment is required, reference should be made to Technical Specification, Table 3.2.A Note 12 3.3.6.1 and 1-AOI-30B-1, Reactor Zone Ventilation Failure. Shift Manager should be notified immediately.

G. The Reactor Zone Supply and Exhaust Fans will auto trip due to any of the following:

1. Reactor Zone exhaust duct high radiation.

2. Drywell high pressure.

3. Reactor low water level.

4. Reactor Zone high or low pressure.

H. Reactor Zone supply and exhaust fans are alternated every six weeks.

I. In some cases when transferring Reactor Zone supply and exhaust fans from slow to fast speed, the fan motor breaker may trip on thermal overload if a wait of 5 minutes is NOT observed.

BFN Unit 1	Group 6 Ventilation System Isolation	1-AOI-64-2D Rev. 0017 Page 5 of 15

2.0 SYMPTOMS (continued)

B. Reactor Zone Ventilation Radiation levels rising as indicated on RX REFUEL ZONE EXHAUST RADIATION 1-RR-90-144, Panel 9-2, or 1-RM-90-142 and 143 A and B detectors, Panel 9-10.

C. Refueling Zone Ventilation Radiation levels rising as indicated on RX REFUEL ZONE EXHAUST RADIATION 1-RR-90-144, Panel 9-2, or 1-RM-90-140 and 141 A and B detectors, Panel 9-10.

3.0 AUTOMATIC ACTIONS

3.1 Refueling Zone Isolation

A. The following equipment TRIPS and ISOLATES:

1. Refueling Zone Supply and Exhaust fans trip and isolate.

a. RFF EXH FAN 1A DISCH DMPR OPR, 1-FCO-64-3A

b. RFF SUP FAN 1A DISCH DMPR OPR, 1-FCO-64-3B

c. RFF EXH FAN 1B DISCH DMPR OPR, 1-FCO-64-4A

d. RFF SUP FAN 1B DISCH DMPR OPR, 1-FCO-64-4B

e. RFF SUP OUTBD ISOL DMPR OPR, 1-FCO-64-5

f. RFF SUP INBD ISOL DMPR OPR, 1-FCO-64-6

g. RFF EXH OUTBD ISOL DMPR OPR, 1-FCO-64-9

h. RFF EXH INBD ISOL DMPR OPR, 1-FCO-64-10

3.2 Reactor Zone Isolation

A. Refuel Zone Isolation Actions occur as listed in Section 3.1.

B. Reactor Zone Supply and Exhaust fans trip and isolate.

1. RX ZONE EXH FAN 1A DISCH DMPR OPR, 1-FCO-64-11A
2. RX ZONE SUP FAN 1A DISCH DMPR OPR, 1-FCO-64-11B
3. RX ZONE EXH FAN 1B DISCH DMPR OPR, 1-FCO-64-12A
4. RX ZONE SUP FAN 1B DISCH DMPR OPR, 1-FCO-64-12B
5. REACTOR ZONE SPLY OUTBD ISOL DAMPER OPR, 1-FCO-64-13
6. REACTOR ZONE SPLY INBD ISOL DAMPER OPR, 1-FCO-64-14
7. REACTOR ZONE EXH INBD ISOL DAMPER OPR, 1-FCO-64-42
8. REACTOR ZONE EXH OUTBD ISOL DAMPER OPR, 1-FCO-64-43

C. RX ZONE EXH SGT XTIE DMPR OPR, 1-FCO-64-40, OPENS.

D. RX ZONE EXH SGT XTIE DMPR OPR, 1-FCO-64-41, OPENS.

6.	System Isolation (Group 6)	Obj. V.B.2,4
a.	The isolation signals are low reactor water level +2", high drywell pressure 2.45 psig, and high radiation in exhaust duct (72 MR/hr Refuel zone or Reactor zone).	Obj. V.B.2
b.	On auto isolation signal (except Refuel Zone high radiation) the unit reactor zone supply and exhaust fans trip, all refuel zone supply and exhaust fans trip, unit reactor zone and all refuel zone supply and exhaust isolation dampers close, and dampers to Standby Gas Treatment System open and SGT train blowers auto start.	Point out actual isolation dampers. Supply: 64-5 & 6, 64-13 & 14; Exhaust: 64-9 & 10, 64-42 & 43; SGT: 64-40 & 41, 44 & 45 RF (unit 1 print)
c.	Note: Damper logic is as follows: PCIS Group 6 with A SGT running opens 64-41 and 45; PCIS Group 6 with B SGT running opens 64-40 and 44.	Discuss importance of ensuring a complete Gp 6 isolation occurs. Attention to detail and intrusiveness
d.	On isolation due to high radiation in Refuel Zone all refuel zones isolate, refuel zone supply and exhaust fans trip, SGT starts and aligns dampers for refuel zone only.	WORK PLANNING

BROWNS FERRY 0707

Proposed Question: **RO # 36**

Given the following Unit 1 plant status:

- The unit was operating at 100% rated power.
- A Loss of Off-Site Power has occurred.
- 1-EOI-1, "RPV Control" was entered on low RPV level.
- 1-EOI-2, "Primary Containment Control" was entered on High Drywell pressure.
- 1-EOI-3, "Secondary Containment Control" was entered on Secondary Containment Δp.
- RPV level is being maintained at (-) 20 inches.
- Drywell pressure is 1.2 psig and steady.
- Reactor Building Ventilation was restarted as directed by 1-EOI-3, "Secondary Containment Control"

Which ONE of the following conditions would cause the Reactor Building ventilation to re-isolate?

A. Drywell pressure rises above 2.5 psig.

B. 0-RM-90-259A or B reading 300 cps.

C. Reactor Zone exhaust radiation rises above 75 mr/hr.

D. Refuel Zone exhaust radiation rises above 75 mr/hr.

WHILE EXECUTING THIS PROCEDURE:	
IF	**THEN**
SAMG ENTRY IS REQUIRED AND THE TSC SAM TEAM HAS ASSUMED COMMAND AND CONTROL	**EXIT** ALL EOI FLOWCHARTS AND **PERFORM** SAMG ACTIONS AS DIRECTED BY THE SAM TEAM
RX ZONE VENTILATION EXH RADIATION LVL IS ABOVE 72 MR/HR	**VERIFY** ISOLATION OF RX ZONE AND REFUEL ZONE VENTILATION AND **VERIFY** INIT OF SGTS
REFUEL ZONE VENTILATION EXH RADIATION LVL IS ABOVE 72 MR/HR	**VERIFY** ISOLATION OF REFUEL ZONE VENTILATION AND **VERIFY** INIT OF SGTS
RX ZONE VENTILATION IS ISOLATED AND RX ZONE VENTILATION EXH RADIATION LVL IS BELOW 72 MR/HR.	**RESTART** RX ZONE VENTILATION (APPX 8F). **DEFEAT** ISOLATION INTERLOCKS IF NECESSARY (APPX 8E)
REFUEL ZONE VENTILATION IS ISOLATED AND REFUEL ZONE VENTILATION EXH RADIATION LVL IS BELOW 72 MR/HR	**RESTART** REFUEL ZONE VENTILATION (APPX 8F). **DEFEAT** ISOLATION INTERLOCKS IF NECESSARY (APPX 8E)

SCC-1

Examination Outline Cross-reference:

223002 PCIS/Nuclear Steam Supply Shutoff

K1.13 (10CFR 55.41.7)

Knowledge of the physical connections and/or cause-effect relationships between the PRIMARY CONTAINMENT ISOLATION SYSTEM (PCIS) / NUCLEAR STEAM SUPPLY SHUT-OFF and the following:

- Traversing in-core probe system

Level	RO
Tier #	2
Group #	1
K/A #	223002K1.13
Importance Rating	2.7

Proposed Question: **# 42**

Unit 1 Traversing Incore Probe (TIP) operations are in progress, when a spurious isolation occurs. The cause of the isolation has been determined, **AND** direction to reset has been given.

Which ONE of the following describes the **MINIMUM** steps required to reset the isolation?

A. Rotate **BOTH** PCIS Div I **AND** Div II RESET to the **RIGHT** on panel 1-9-4. Then, depress TIP ISOLATION RESET pushbutton on Panel 1-9-13.

B. Rotate **EITHER** PCIS Div I **OR** Div II RESET to the **LEFT and RIGHT** on panel 1-9-4. Then, depress TIP ISOLATION RESET pushbutton on Panel 1-9-13.

C. Depress TIP ISOLATION RESET pushbutton on Panel 1-9-13. Then, rotate **BOTH** PCIS Div I **AND** Div II RESET to the **LEFT** on panel 1-9-4.

D. Depress TIP ISOLATION RESET pushbutton on Panel 1-9-13. Then, rotate **EITHER** PCIS Div I **OR** Div II RESET to the **LEFT and RIGHT** on panel 1-9-4.

Proposed Answer: **A**

Explanation (Optional):

A **CORRECT:** Reset Div I and Div II PCIS, by rotating to the RIGHT. This energizes K47 & 48, allowing Group 8 reset. Then TIP reset pushbutton is depressed.

B INCORRECT: BOTH K47 & 48 relays require energizing, thus BOTH PCIS switches must be rotated to the RIGHT.

C INCORRECT: PCIS needs reset prior to TIP. PCIS is required to be rotated to the RIGHT to energize K47 & 48.

D INCORRECT: PCIS needs reset prior to TIP. PCIS is required to be rotated to the RIGHT to energize K47 & 48.

Technical Reference(s): 1-AOI-64-2E Rev 0 (Attach if not previously provided)

OPL171.017 Rev 13 (Including version / revision number)

Proposed references to be provided to applicants during examination: NONE

Learning Objective: V.B.3 (As available)

Question Source: Bank # _____

Modified Bank # _____ (Note changes or attach parent)

New X

Question History: Last NRC Exam _____

(Optional - Questions validated at the facility since 10/95 will generally undergo less rigorous review by the NRC; failure to provide the information will necessitate a detailed review of every question.)

Question Cognitive Level: Memory or Fundamental Knowledge X

Comprehension or Analysis

10 CFR Part 55 Content: 55.41 X

55.43

Comments:

BFN Unit 1	Traversing Incore Probe Isolation	1-AOI-64-2e Rev. 0000 Page 6 of 7

4.2 Subsequent Actions (continued)

[7] **IF** a Group 8 isolation occurred **AND** plant conditions allow resetting the isolation signal, **THEN**

RESET the following:

- PCIS DIV I RESET, 1-HS-64-16A-S32 (Panel 1-9-4) ☐
- PCIS DIV II RESET, 1-HS-64-16A-S33 (Panel 1-9-4) ☐
- TIP ISOLATION RESET, 1-HS-94-7D/S2 (Panel 1-9-13) ☐

OPL171.017
Revision 13
Page 25 of 56

INSTRUCTOR NOTES

g. Group 8

Resetting a Group 8 (TIP) isolation signal requires rotating the RESET switches on Panel 9-4 to the right AND depression of the TIP ISOLATION RESET pushbutton (HS-94-7D-32) on Panel 9-13.

Obj. V.B.3
Obj. V.C.3

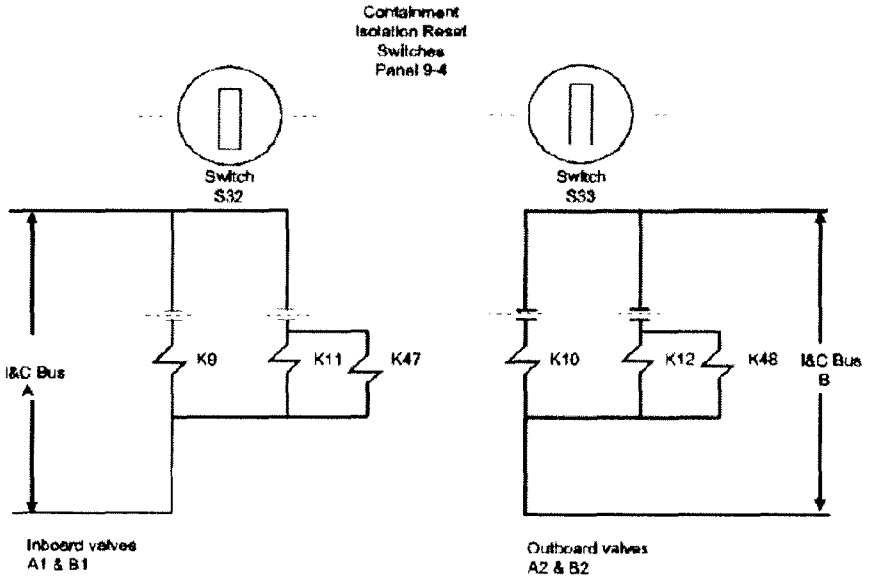

Relay	Control Isolation Groups
K9 and K10	1
K11 and K12	2 and 5
K47 and K48	2, 3, and 8

Note: Isolation Groups 4 and 5 (HPCI and RCIC) are reset with separate switches on Panel 9-3.

(Reference: 2-730E927 Sh 7, 2-730E927 Sh 8, 2-730E927 Sh 9)

TP-4 PCIS RESET CIRCUITRY

K47 / 48 input into Group 8 (TIP) reset logic. The RESET switches must be rotated to the RIGHT to reset the signal.

Examination Outline Cross-reference:	Level	RO
239002 SRVs **A1.01** (10CFR 55.41.5) Ability to predict and/or monitor changes in parameters associated with operating the RELIEF/SAFETY VALVES (SRVs) controls including: • Tail pipe temperature	Tier #	2
	Group #	1
	K/A #	239002A1.01
	Importance Rating	3.3

Proposed Question: **# 43**

Unit 1 is operating at 100% Reactor Power when the following annunciator alarms:

- MAIN STEAM RELIEF VALVES OPEN, (1-9-3C, Window 24)

Which ONE of the following completes the statement?

The annunciator is triggered by __**(1)**__ **AND** can be verified by observing the __**(2)**__.

A. **(1)** tail pipe temperature
(2) tail pipe acoustic monitor.

B. **(1)** tail pipe acoustic monitor
(2) tail pipe temperature.

C. **(1)** Temperature Recorder 1-TR-1-1 on Panel 1-9-47
(2) SPDS Display, Main Steam / SRV Status

D. **(1)** Temperature Recorder 1-TR-1-1 on Panel 1-9-47
(2) tail pipe acoustic monitor.

Proposed Answer: **B**

Explanation (Optional):

A INCORRECT: Part (1) and (2) are incorrect. These are the two methods to positively verify MSRV operation, but the annunciator is based on tail pipe flow read by acoustic sensors in each tailpipe. Since a leaking (simmering) MSRV can also indicate tail pipe temperatures equal to an open MSRV, it is not used to annunciate an open MSRV.

B **CORRECT**: Part 1 is correct - The annunciator is based on tail pipe flow read by acoustic sensors in each tailpipe. Part 2 is correct - Verifying the tail pipe temperature is responding to the demand is positive proof that the MSRV is passing steam from the RPV to the tail pipe.

C INCORRECT: Part 1 incorrect - Position indication is only indicating that the MSRV has received a demand to open, not its actual status. Part (2) is correct. Verifying the tail pipe temperature is responding to the demand is positive proof that the MSRV is passing steam from the RPV to the tail pipe.

D INCORRECT: Part (1) is incorrect Position indication is only indicating that the MSRV has received a demand to open, not its actual status. Part (2) is incorrect, but is also proof that the MSRV is passing steam from the RPV to the tail pipe. This would certainly be an indication to verify MSRV status, but it is also the input to the annunciator given in the stem of the question. Therefore, it is incorrect for the conditions given.

Technical Reference(s): 1-ARP-9-3C Rev 20 (Attach if not previously provided)

OPL171.009 Rev 10 (Including version / revision number)

Proposed references to be provided to applicants during examination: NONE

Learning Objective: _____ (As available)

Question Source: Bank # 0707 NRC #16

Modified Bank # _____ (Note changes or attach parent)

New _____

Question History: Last NRC Exam BF 0707 NRC

(Optional - Questions validated at the facility since 10/95 will generally undergo less rigorous review by the NRC; failure to provide the information will necessitate a detailed review of every question.)

Question Cognitive Level: Memory or Fundamental Knowledge **X**

Comprehension or Analysis

10 CFR Part 55 Content: 55.41 **X**

55.43

Comments:

(1) There are 13 Safety / Relief valves.

(a) Each SRV has a capacity of 905,000lb/hr @ 1135psig. This gives a total capacity -- 84.1% (79.5% EPU) design steam flow at the reference pressure.

(b) Valve leakage is detected by a temperature element and an acoustic monitor on each tailpipe. However, only the acoustic monitor will generate an alarm on panel 9-3. — Obj. V.B.6, Obj. V.C.4

MAIN STEAM RELIEF VALVES OPEN 1-FA-1-1	25

(Page 1 of 1)

Sensor/Trip Point:

1-FMT-1-4
MSRV Tailpipe Flow Monitor

Sensor Location: 1-FMT-1-4,Panel 1-9-3
Main Control Rm El 617'

Probable Cause: Main Steam Relief Valve is open or leaking.

Automatic Action: None

Operator Action:

A. **CHECK** MSRV Temp Recorder, 1-TR-1-1 on Panel 1-9-47 for raised temp and MSRV Tailpipe Flow Monitor, 1-FMT-1-4 on Panel 1-9-3 for flow indications. ☐
B. **REFER TO** 1-AOI-1-1. ☐
C. **IF** alarm is due to sensor malfunction, **THEN** **REFER TO** 0-OI-55 and OPDP-4. ☐

References: 1-47E610-1-1 1-45E620-2-1 GE 730E929-2

Examination Outline Cross-reference:

259002 Reactor Water Level Control

G2.4.45 (10CFR 55.41.10)

Ability to prioritize and interpret the significance of each annunciator or alarm.

Level	RO
Tier #	2
Group #	1
K/A #	259002G2.4.45
Importance Rating	4.1

Proposed Question: **# 44**

Unit 3 is operating at 100% when the following alarms are received:

- RFPT B ABNORMAL, (3-9-6C, Window 8)
- RFPT TRIP, (3-9-6C, Window 29)
- RFP DISCH FLOW LOW, (3-9-6C, Window 32)
- REACTOR WATER LEVEL ABNORMAL, (3-9-5A, Window 8), due to Low Level

Based on these indications, which ONE of the following identifies the required action(s) for the crew to take?

A. Respond to the automatic Scram; then, enter 3-EOI-1, "RPV Control."

B. Reduce Core Flow to 50 to 60%; then, manually Scram the Reactor.

C. Verify Automatic Runback of Reactor Recirculation Pumps, then reduce Core Flow to maintain running Reactor Feed Pumps' Speed ≤ 5850 rpm.

D. Verify Automatic Runback of Reactor Recirculation Pumps, then reduce Core Flow to maintain running Reactor Feed Pumps' Speed ≤ 5050 rpm.

Proposed Answer: **D**

Explanation (Optional):

A INCORRECT: REACTOR WATER LEVEL ABNORMAL, (2-9-5A, Window 8) alarms at (+) 27 inches. EOI-1 entry for Low Reactor Water Level is (+) 2 inches.

B INCORRECT: The purpose of the 75% limiter is to automatically reduce reactor power to a value within the capacity of the remaining Feedwater Pumps. With that the Low Level Reactor Scram will not be challenged. Manually Scramming the Reactor would not be required or appropriate.

C INCORRECT: Precautions and Limitations for 3-OI-3 say to maintain Operating RFPs for Unit 3 ≤ 5050 rpm. This distracter's plausibility is based on unit difference. Precautions and Limitations for 2-OI-3 say to maintain Operating RFPs for Unit 2 ≤ 5850 rpm.

D **CORRECT**: Based on the alarms identified in the stem, RFPT B has tripped and Reactor Level has dropped less than (+) 27 inches. The 75% Limiter will initiate an automatic runback of Recirc pump speed if any individual RFP flow is < 19% AND RPV water level lowers to the low level alarm set point of + 27" (level 4). 75% corresponds to 1130 rpm. 2-AOI-3-1, "Loss of Reactor Feedwater or Reactor Water Level High/Low" subsequent actions direct the crew to verify applicable automatic actions. 3-OI-3 specifies operating limit for RFPT speed of 5050 rpm.

Technical Reference(s): 3-ARP-9-6C Rev 20 (Attach if not previously provided)
3-ARP-9-5A Rev 38, 2-OI-3 Rev 123
OPL171.007 Rev 23 (Including version / revision number)
3-AOI-3-1 Rev 9 / 3-OI-3 Rev 77

Proposed references to be provided to applicants during examination: NONE

Learning Objective: _____ (As available)

Question Source: Bank # _____
Modified Bank # _____ (Note changes or attach parent)
New X

Question History: Last NRC Exam _____

(Optional - Questions validated at the facility since 10/95 will generally undergo less rigorous review by the NRC; failure to provide the information will necessitate a detailed review of every question.)

Question Cognitive Level: Memory or Fundamental Knowledge
Comprehension or Analysis X

10 CFR Part 55 Content: 55.41 X
55.43

Comments:

OPL171.007

4. 75% Limiter

a. The 75% Limiter will initiate an automatic runback of Recirc pump speed if — 75% = 1130 rpm

Any individual RFP flow is < 19% AND RPV water level lowers to the low level alarm setpoint of + 27" (level 4) — 28% = 480 rpm

OR

Reactor Scram Signal (Units 2 and 3 only - DCN 67325 and DCN 65487-A) — DCN 65487-A

b. The purpose of the limiter is to automatically reduce reactor power to a value within the capacity of the remaining feedwater pumps.

3.0 PRECAUTIONS AND LIMITATIONS (continued)

FF. For operating Feed Pumps, monitor and maintain the following parameters within ranges described below.

1. RFPT Hydraulic Pressure: ≈ 200 psig (local indication).
2. Lube Oil Pressure to RFP Bearings: ≈ 15 psig (local indication).
3. Lube Oil Pressure to RFPT Bearings: ≈ 10 psig (local indication).
4. Bearing lube oil from cooler: 110°F to 120°F (obtained from Process Computer Point Id's 24-56, 24-54, and 24-52).
5. Bearing lube oil to cooler: 180°F maximum (obtained from Process Computer Point Id's TBD025, TBD032, and TBD039).
6. Maximum Oil Temp Rise across the Turbine Bearings: 50°F.
7. Vertical Vibration at RFP Bearing Supports: 2 mils double amplitude.
8. RFPT Speed: 5050 rpm maximum (3-9-6).

BFN Unit 2	Reactor Feedwater System	2-OI-3 Rev. 0123 Page 15 of 204

3.0 PRECAUTIONS AND LIMITATIONS (continued)

Z. Startup bypass valve, 2-LCV-3-53, is air to open, spring to close. The valve fails as is on loss of air (65 psig). On a loss of power or loss of control signal, 2-LCV-3-53 fails closed.

AA. RFP 2A(2B)(2C) SUCTION VALVE, 2-FCV-2-83(95)(108), will not open if bearing oil pressure is low (less than 4 psig).

BB. Total Feedwater flow provides inputs to Feedwater Level Control System, Rod Worth Minimizer, Recirc Flow Control System, Feedwater Integrator, and Feedwater flow recorder.

CC. RX WATER LEVEL NARROW RANGE instruments, 2-LI-3-208A(D) on Panel 2-9-5 and 2-LI-3-208B(C) on Panel 2-9-3 should be monitored closely during reactor level transients. These instruments provide inputs to Main Turbine, Reactor Feedpump Turbine, HPCI, and RCIC high water level trip logic.

DD. [TSAR] Operation of Reactor Feed Pump Turbines with inoperable high level trip instrumentation may result in equipment damage or personnel hazard. [Item D-91]

EE. It is acceptable to Shut Down Vapor Extractor for up to 24 hours since this should not cause any detrimental effect to the system. If the Extractor needs to be out longer than 24 hours, an evaluation of the effects on the system should be done by System Engineering. [SEOPR 96-2/3 047-003]

FF. For operating Feed Pumps, check the following parameters and maintain them within the ranges described below.

1. RFPT Hydraulic Pressure: ≈ 200 psig (local indication).

2. Lube Oil Pressure to RFP Bearings: ≈ 15 psig (local indication).

3. Lube Oil Pressure to RFPT Bearings: ≈ 10 psig (local indication).

4. Bearing lube oil from cooler: 110°F to 120°F (obtained from Process Computer Point Id's 24-56, 24-54, and 24-52).

5. Bearing lube oil to cooler: 180°F maximum (obtained from Process Computer Point Id's TBD025, TBD032, and TBD039).

6. Maximum Oil Temp Rise across the Turbine Bearings: 50°F.

7. Vertical Vibration at RFP Bearing Supports: 2 mils double amplitude.

8. RFPT Speed: 5850 rpm maximum (Panel 2-9-6).

REACTOR WATER LEVEL ABNORMAL 3-LA-3-53	8

(Page 1 of 1)

Sensor/Trip Point:

RFW Control System

3-RLY-003-0053LL ≤ 27 inches

3-RLY-003-0053LH ≥ 39 inches

Average of valid Narrow Range level signals from RFW Control System. Signals originate from 3-LT-3-53, 3-60, 3-206, 3-253.

Sensor Location:
3-RLY-003-0053LL in Panel 3-9-97
3-RLY-003-0053LH in Panel 3-9-97
3-LT-3-53 on Panel 25-5B (Reactor Bldg. El 593', R17-T)
3-LT-3-60 on Panel 25-6B (Reactor Bldg El 593', R19-Q)
3-LT-3-206 on Panel 3-925-0426 (Reactor Bldg 593',R17-T)
3-LT-3-253 on Panel 25-6D (Reactor Bldg 593", R19-Q))

Probable Cause:
A. Reactor water level high or low.
B. Malfunction of sensor.

Automatic Action:
None
(Reactor scram on low level at +2.0 in)
(Main Turbine/RFPT trip and subsequent scram if ≥ 30% Reactor Power on high level at +55 in.)

Examination Outline Cross-reference:

261000 SGTS

K6.05 (10CFR 55.41.7)

Knowledge of the effect that a loss or malfunction of the following will have on the STANDBY GAS TREATMENT SYSTEM (SGTS):

- Reactor protection system: Plant-Specific

Level	RO
Tier #	2
Group #	1
K/A #	261000K6.05
Importance Rating	3.1

Proposed Question: **# 45**

Which ONE of the following completes the statement?

A loss of RPS Bus __**(1)**__ on **ANY** Unit will cause __**(2)**__ Standby Gas Treatment Train(s) to initiate.

A. **(1)** 'A'
(2) NO

B. **(1)** 'B'
(2) ONLY 'B'

C. **(1)** 'A'
(2) 'A', 'B' **AND** 'C'

D. **(1)** 'B'
(2) ONLY 'B' **AND** 'C'

Proposed Answer: **C**

Explanation (Optional):

A INCORRECT: Loss of RPS A or B Power Supply will cause PCIS to fail in the tripped condition. Loss of either RPS Bus on any Unit will cause all 3 Standby Gas Treatment Trains to initiate. Plausible in that then candidate may think only half the logic is made up or loss of power results in untripped condition.

B INCORRECT: See explanation above. Plausible in that the associated RPS Bus has lost power.

C **CORRECT**: Loss of RPS A or B Power Supply will cause PCIS to fail in the tripped condition. Loss of either RPS Bus on any Unit will cause all 3 Standby Gas Treatment Trains to initiate.

D INCORRECT: See explanation above. Plausible in that the associated RPS Bus has lost power and C Train being affected could be confused with typical B/C Isolation Logic associated with B Bus.

Technical Reference(s): OPL171.018 Rev 10 (Attach if not previously provided)

(Including version / revision number)

Proposed references to be provided to applicants during examination: NONE

Learning Objective: _____ (As available)

Question Source: Bank # _____

Modified Bank # _____ (Note changes or attach parent)

New X

Question History: Last NRC Exam _____

(Optional - Questions validated at the facility since 10/95 will generally undergo less rigorous review by the NRC; failure to provide the information will necessitate a detailed review of every question.)

Question Cognitive Level: Memory or Fundamental Knowledge X

Comprehension or Analysis

10 CFR Part 55 Content: 55.41 X

55.43

Comments:

3. Reactor Protection System (RPS)

RPS supplies power to the PCIS logic. Loss of RPS power will cause PCIS to fail in the tripped condition. Loss of either RPS bus on any unit will cause all three SGT trains to initiate

Examination Outline Cross-reference:

262001 AC Electrical Distribution

A3.04 (10CFR 55.41.7)

Ability to monitor automatic operations of the A.C. ELECTRICAL DISTRIBUTION SYSTEM including:

- Load sequencing

Level	RO
Tier #	2
Group #	1
K/A #	262001A3.04
Importance Rating	3.4

Proposed Question: **# 46**

Unit 3 was operating at 100% Reactor Power when a total Loss of Offsite Power occurs in conjunction with a LOCA.

Which ONE of the following completes the statement?

When the Diesel Generator Output Breakers close, the first Core Spray Pump will start in__**(1)**__seconds. RHRSW Pumps assigned for EECW Automatic start will start in__**(2)**__seconds.

A. **(1)** 0
(2) 14

B. **(1)** 0
(2) 28

C. **(1)** 7
(2) 14

D. **(1)** 7
(2) 28

Proposed Answer: **C**

Explanation (Optional):

A INCORRECT: Part 1 incorrect – All Core Spray Pumps start at 7 seconds time after accident for DGVA. Plausible in that this would be the correct answer for the first Core Spray Pump start if Normal Voltage Available (NVA) Part correct - RHRSW Pumps assigned for EECW Automatic Start will be sequenced at 14 seconds after Diesel Generator output breaker closing for DGVA sequence.

B INCORRECT: Part 1 and 2 incorrect. Plausible for 28 seconds for RHRSW sequence time in that this would be the correct answer for NVA sequence.

C **CORRECT**: Part 1 correct - All Core Spray Pumps start at 7 seconds after Diesel Generator output breaker closes if Normal Voltage is not available (DGVA). Part 2 correct – RHRSW Pumps assigned for EECW Automatic Start will be sequenced at 14 seconds after Diesel Generator output breaker closing for DGVA sequence.

D INCORRECT: Part 1 correct and Part 2 incorrect as explained above.

Technical Reference(s): OPL171.038 Rev 16 (Attach if not previously provided)

(Including version / revision number)

Proposed references to be provided to applicants during examination: NONE

Learning Objective: _____ (As available)

Question Source: Bank # _____

Modified Bank # NRC 0707 #24 (Note changes or attach parent)

New _____

Question History: Last NRC Exam BF NRC 0707

(Optional - Questions validated at the facility since 10/95 will generally undergo less rigorous review by the NRC; failure to provide the information will necessitate a detailed review of every question.)

Question Cognitive Level: Memory or Fundamental Knowledge

Comprehension or Analysis X

10 CFR Part 55 Content: 55.41 X

55.43

Comments:

3. Accident Operation
   a. Accident signal received (**CASx**)
      (1) Signals diesel generators to start.
      (2) Opens diesel output breakers if shut. Obj.V.B.9
   b. If normal voltage is available, load will sequence on as follows: (**NVA**) Obj.V.C.6 Obj.V.D.15 Obj.V.E. 15

Time After Accident	S/D Board A	S/D Board C	S/D Board B	S/D Board D
0	RHR/CS A			
7		RHR/CS B		
14			RHR/CS C	
21				RHR/CS D
28	RHRSW*	RHRSW*	RHRSW*	RHRSW*

*RHRSW pumps assigned for EECW automatic start

   c. **If normal voltage is <u>NOT</u> available: (DGVA)** Obj.V.B.9 Obj.V.C.6
      (1) After 5-second time delay, all 4kV Shutdown Board loads except 4160/480V transformer breakers are automatically tripped.
      (2) Diesel generator output breaker closes when diesel is at speed.
      (3) Loads sequence as indicated below

Time After Accident	S/D Board A	S/D Board B	S/D Board C	S/D Board D
0	RHR A	RHR C	RHR B	RHR D
7	CS A	CS C	CS B	CS D
14	RHRSW *	RHRSW *	RHRSW *	RHRSW *

*RHRSW pumps assigned for EECW automatic start

   d. Certain 480V loads are shed whenever an accident signal is received in conjunction with the diesel generator tied to the board. (see OPL171.072)

BROWNS FERRY 0707

Proposed Question: **RO # 24**

Given the following Unit 3 plant conditions:

- Operating at 100% rated power with all equipment in a normal lineup.
- A total loss of all off-site power occurs in conjunction with a large break LOCA.
- Drywell pressure peaks at 22 psig and is subsequently lowered to 2.3 psig using Drywell Sprays.
- RPV pressure lowered to 400 psig and is stable.
- RPV level drops below (-) 122 inches.
- Assume no operator actions.

Which ONE of the following describes the expected response of the RHR pumps and SGT system as a result of these conditions?

When the DG output breakers close, RHR pumps will start _____(1)_____. The B SGT fan _____(2)_____.

	(1)	(2)
A.	in 7 seconds	auto starts ONLY if A SGT fan fails to start
B.	in 7 seconds	auto starts in 40 seconds
C.	immediately	auto starts ONLY if A SGT fan fails to start
D.	immediately	auto starts in 40 seconds

Examination Outline Cross-reference:

262001 AC Electrical Distribution

G2.2.39 (10CFR 55.41.10)

- Knowledge of less than or equal to one hour Technical Specification action statements for systems.

Level	RO
Tier #	2
Group #	1
K/A #	262001G2.2.39
Importance Rating	3.9

Proposed Question: **# 47**

Unit 3 is operating in Mode 1, when a loss of 480V RMOV Board 3E occurs.

Per Tech Spec 3.8.7,"Distribution Systems-Operating," which ONE of the following is correct?

A.

REQUIRED ACTION	COMPLETION TIME
Declare RHR Loop I Inoperable.	**IMMEDIATELY**

B.

REQUIRED ACTION	COMPLETION TIME
Declare RHR Loop II Inoperable.	**IMMEDIATELY**

C.

REQUIRED ACTION	COMPLETION TIME
Declare RHR Loop I Inoperable.	**1 HOUR**

D.

REQUIRED ACTION	COMPLETION TIME
Declare RHR Loop II Inoperable.	**1 HOUR**

Proposed Answer: **B**

Explanation (Optional):

A INCORRECT: Part 1 = incorrect, 480V RMOV Board 3E supplies power to valves 3-74-30 (Min Flow Valve- normally OPEN) & 67 (LPCI Inbd Inj Valve- normally CLOSED) for RHR Loop II. Does **NOT** affect Loop I components. Part 2 = correct, The completion time portion is correct.

B **CORRECT:** Part 1 = correct, 480V RMOV Board 3E supplies power to valves 3-74-30 (Min Flow Valve- normally OPEN) & 67 (LPCI Inbd Inj Valve- normally CLOSED) for RHR Loop II. Part 2 = correct, Condition C of TS 3.8.7 requires an IMMEDIATE action to declare affected RHR inoperable.

C INCORRECT: Part 1 = incorrect, 480V RMOV Board 3E supplies power to valves 3-74-30 (Min Flow Valve- normally OPEN) & 67 (LPCI Inbd Inj Valve- normally CLOSED) for RHR Loop II. Does **NOT** affect Loop I components. Part 2 = incorrect, Condition C of TS 3.8.7 requires an IMMEDIATE action to declare affected RHR inoperable.

D INCORRECT: Part 1= correct, 480V RMOV Board 3E supplies power to valves 3-74-30 (Min Flow Valve- normally OPEN) & 67 (LPCI Inbd Inj Valve- normally CLOSED) for RHR Loop II. Part 2 = incorrect, Condition C of TS 3.8.7 requires an IMMEDIATE action to declare affected RHR inoperable.

Technical Reference(s): Tech Spec 3.8.7 (Attach if not previously provided)

OPL171.044 Rev 16

Proposed references to be provided to applicants during examination: NONE

Learning Objective: V.B.19 (As available)

Question Source: Bank # ____ Modified Bank # ____ (Note changes or attach parent)

New X

Question History: Last NRC Exam ____

(Optional - Questions validated at the facility since 10/95 will generally undergo less rigorous review by the NRC; failure to provide the information will necessitate a detailed review of every question.)

Question Cognitive Level: Memory or Fundamental Knowledge X

Comprehension or Analysis

10 CFR Part 55 Content: 55.41 X

55.43

Comments:

Distribution Systems - Operating
3.8.7

3.8 ELECTRICAL POWER SYSTEMS

3.8.7 Distribution Systems - Operating

LCO 3.8.7 The following AC and DC electrical power distribution subsystems shall be OPERABLE:

a. Unit 3 4.16 kV Shutdown Boards;

b. Unit 3 480 V Shutdown Boards;

c. Unit 3 480 V RMOV Boards 3A, 3B, 3D, and 3E;

d. Unit 3 DG Auxiliary Boards;

e. Unit DC Boards and 250 V DC RMOV Boards 3A, 3B, and 3C;

f. Shutdown Board DC Distribution Panel 3EB; and

g. Unit 1 and 2 AC and DC Boards needed to support equipment required to be OPERABLE by LCO 3.6.4.3, "Standby Gas Treatment (SGT) System," and LCO 3.7.3, "Control Room Emergency Ventilation (CREV) System."

ACTIONS (continued)

CONDITION	REQUIRED ACTION	COMPLETION TIME
C. Unit 3 480 V RMOV Board 3D inoperable. OR Unit 3 480 V RMOV Board 3E inoperable.	C.1 Declare the affected RHR subsystem inoperable.	Immediately

(2) Tube side fluid - RHRSW @ 4500 gpm

d. Tube side pressure should be kept higher than shell side if possible to minimize the potential leakage of RHR water to the RHRSW. This limits the potential for radioactive discharge to the environment. RHRSW discharge is monitored for radioactivity prior to discharge to the river. No automatic actions occur due to a high radioactivity condition in the RHRSW.

4. Valves — Obj. V.B.8

a. Power supplies - All RHR motor-operated valves are powered from the 480V Reactor MOV Boards except as noted. The Reactor MOV Board power supplies are as follows. Note divisional separation maintained. — Obj. V.E.6

480 RMOV BOARD	NORMAL POWER	DIV	ALT POWER	DIV	VALVES
"A"	480V S/D "A"	I	480V S/D "B"	II	RHR Sys I valves (except as noted)
"B"	480V S/D "B"	II	480V S/D "A"	I	RHR Sys II valves (except as noted)
"C"	480V S/D "B"	II	480V S/D "A"	I	none
"D" **	"DN" MG Set	I	"DA" MG Set	II	74-7 & 53
"E" **	"EN" MG Set	II	"EA" MG Set	I	74-30 & 67

h. RHR pump minimum flow valves — (74-7; 74-30)

Obj. V.C.5
TP-24 and 25

(1) Automatically open on low flow

(a) (≤ 5800 gpm after 10 sec delay)

(b) Normally open in Standby due to low flow and loop Shutdown Cooling valves closed

(2) Automatically close when flow > 5800 gpm

Flow switch tolerance may allow setpoint to be from 4500-7000 gpm 1/2/3-OI-74, P & L

Examination Outline Cross-reference:

262002 UPS (AC/DC)

K6.02 (10CFR 55.41.7)

Knowledge of the effect that a loss or malfunction of the following will have on the UNINTERRUPTABLE POWER SUPPLY (UPS) (A.C. / D.C.):

- D.C. electrical power

Level	RO	SRO
Tier #	2	—
Group #	1	—
K/A #	262002K6.02	
Importance Rating	2.8	—

Proposed Question: **# 48**

An electrical fault on Battery Board 2 Panel 11 has caused it to de-energize.

Which ONE of the following completes the statement?

ALTERNATE power _____.

A. is lost to 2-25-32, Unit 2 Backup Control Center Panel.

B. is lost to 3-25-32, Unit 3 Backup Control Center Panel.

C. is automatically transferred to 2-25-32, Unit 2 Backup Control Center Panel.

D. is automatically transferred to 3-25-32, Unit 3 Backup Control Center Panel.

Proposed Answer: **B**

Explanation (Optional):

A INCORRECT: Battery Board 2 Panel 11 supplies 2-25-32 **Normal** power through breaker 1175.

B **CORRECT:** Battery Board 2 Panel 11 supplies 3-25-32 **Alternate** power through breaker 1176.

C INCORRECT: Transfer scheme is Manual **not** Auto. Performed @ the backup panel.

D INCORRECT: Transfer scheme is Manual **not** Auto. Performed @ the backup panel.

Technical Reference(s): OPL171.102 Rev 6 (Attach if not previously provided)

2-AOI-57-4 Rev 41 (Including version / revision number)

Proposed references to be provided to applicants during examination: NONE

Learning Objective: V.B.2 (As available)

Question Source:

Bank #		
Modified Bank #	0707 AUDIT # 25	(Note changes or attach parent)
New		

Question History:

Last NRC Exam	

(Optional - Questions validated at the facility since 10/95 will generally undergo less rigorous review by the NRC; failure to provide the information will necessitate a detailed review of every question.)

Question Cognitive Level: Memory or Fundamental Knowledge **X**

Comprehension or Analysis

10 CFR Part 55 Content: 55.41 **X**

55.43

Comments:

MEM 2 / 1 UPS /057B K6.02

Arial 12

Unit 1 has experienced an electrical fault on Battery Board 1 Panel 11, causing it to de-energize.

Based on the above condition, which ONE of the following is the correct system response?

A. ALTERNATE power is lost to 3-25-32, Unit 3 Backup Control Center Panel.

B. ALTERNATE power is lost to 1-25-32, Unit 1 Backup Control Center Panel.

C✓ ALTERNATE power is lost to 2-25-32, Unit 2 Backup Control Center Panel.

D. ALTERNATE power is AUTO transferred to 1-25-32, Unit 1 Backup Control Center Panel.

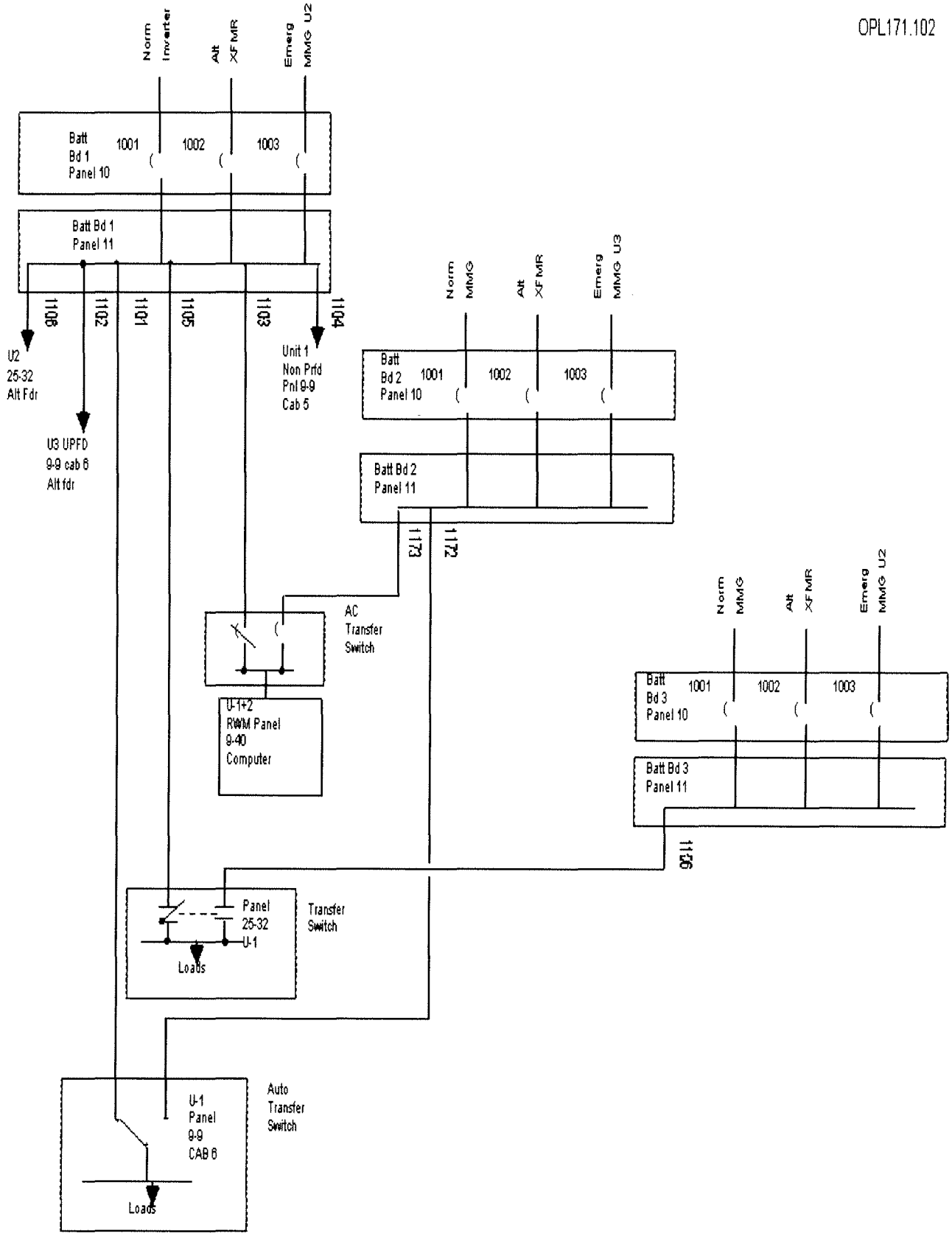

TP-3: UPS POWER DISTRIBUTION Unit 1

	Normal	Alternate
Unit 1 25-32	Batt Bd 1 Panel 11	Batt Bd 3 Panel 11

(5) Unit 2 & 3 normal and alternate supplies for 25-32 Unit Pref loads are: TP-4,5,7

	Normal	Alternate
Unit 2 25-32	Batt Bd 2 Panel 11	Batt Bd 1 Panel 11
Unit 3 25-32	Batt Bd 3 Panel 11	Batt Bd 2 Panel 11

(6) U-1/2/3 25-32 Panels ATU bus normal supply is from Div I ECCS ATU Inverter, and have an ALT power supply from; TP-7,8,9,12

U-1	U2	U3
Batt Bd 3 1106	Batt Bd 1 1106	Batt Bd 2 1176

(7) The Unit 1, computer is normally supplied from 480V Common Board 1 compt 9C with backup DC to the inverter from Battery Bd 5-bkr 316. The Unit 2 computer is fed from 480V Common Bd 2 compt 9A. Backup DC is from Battery Bd 4 bkr 316. The Unit 3 computer is normally supplied from the 480V Common Board 3 with DC backup from Battery Board 6 Bkr 316

Examination Outline Cross-reference:

262002 UPS (AC/DC)

K6.03 (10CFR 55.41.7)

Knowledge of the effect that a loss or malfunction of the following will have on the UNINTERRUPTABLE POWER SUPPLY (UPS) (A.C. / D.C.):

- Static inverter

Level	RO
Tier #	2
Group #	1
K/A #	262002K6.03
Importance Rating	2.7

Proposed Question: **# 49**

Which ONE of the following completes the statement?

The Unit 1 Unit Preferred Inverter will transfer to its ALTERNATE transformer which is powered from 480 V RMOV Bd 1A on a loss of inverter output __**(1)**__ **AND** __**(2)**__ when inverter output is restored.

A. **(1)** without power interruption
(2) will auto-transfer to NORMAL

B. **(1)** after a 5 second time delay
(2) will auto-transfer to NORMAL

C. **(1)** without power interruption
(2) will not auto-transfer back to NORMAL

D. **(1)** after a 5 second time delay
(2) will not auto-transfer back to NORMAL

Proposed Answer: **C**

Explanation (Optional):

A INCORRECT: Part 1 = correct – Auto transfer occurs with no loss of loads. Part 2 = incorrect – Must be manually returned to inverter when output restored. Plausible in that this is a feature of the inverter. However, Auto re-transfer from Alternate to Inverter has been defeated by BFN for all conditions.

B INCORRECT: Part 1 and 2 are both incorrect as detailed in Explanation C. The 5 second time delay is plausible in that on a loss of 120 VAC I&C Buses, the transfer switch operates after a 5 second time delay. The time delay transfer allows for momentary outages. Plausibility of Part 2 explained above.

C **CORRECT**: Part 1 = correct - On a loss of inverter output (inverter failure) the AC load will automatically shift to the alternate supply via the regulating transformer supply with no loss of loads. Part 2 = correct - When the inverter output returns, the supply to the loads must be manually returned to the inverter output via the static switch.

D INCORRECT: Part 1 incorrect and Part 2 is correct as explained above.

Technical Reference(s): OPL171.102 Rev 6 (Attach if not previously provided)

(Including version / revision number)

Proposed references to be provided to applicants during examination: NONE

Learning Objective: _____ (As available)

Question Source: Bank # _____

Modified Bank # _____ (Note changes or attach parent)

New X

Question History: Last NRC Exam _____

(Optional - Questions validated at the facility since 10/95 will generally undergo less rigorous review by the NRC; failure to provide the information will necessitate a detailed review of every question.)

Question Cognitive Level: Memory or Fundamental Knowledge X

Comprehension or Analysis

10 CFR Part 55 Content: 55.41 X

55.43

Comments:

OPL171.102
Revision 6

(4) Inverter operation is as follows

a. The Normal AC supply from 480V RMOV BD1A Comp 19E is the preferred source of power to the inverter.

b. On a loss of normal AC to rectifier, the diode from the DC supply will now forward bias and supply DC to the inverter with no interruption of power. IF normal AC returns then the diode will become reversed bias and the normal AC will supply the inverter output voltage.

	c.	On a loss of inverter output (inverter failure) the AC load will automatically shift to the alternate supply via the regulating transformer supply with no loss of loads. When the inverter output returns, the supply to the loads must be **manually** returned to the inverter output via the static switch.	Ref 0-OI-57C Sect 8.11
r.	'SYNC' (amber light)	Verifies the inverter output is synchronized within 5 to 10 degrees of the alternate AC input to the static switch. This permits a make- before- break load transfer via the static switch. IF the synch light is not lit THEN the flowing transfers are inhibited: 1) ALL manual Xfer's are inhibited 2) Overcurrent Xfer from inverter to Alternate is inhibited 3) Auto re-transfer from Alternate to Inverter (the xfer from Alternate back to inverter has been defeated by BFN for all conditions) The following conditions will force a transfer from inverter to alternate source via static switch regardless whether the unit is in synch: 1) Inverter Fail- Loss of Square Wave 2) Inverter AC Failure	Instructor: Stress procedural adherence . If the procedure step can not be performed as written- stop, contact your supervisor.

Examination Outline Cross-reference:

263000 DC Electrical Distribution

A2.01 (10CFR 55.41.5)

Ability to (a) predict the impacts of the following on the D.C. ELECTRICAL DISTRIBUTION SYSTEM; and (b) based on those predictions, use procedures to correct, control, or mitigate the consequences of those abnormal conditions or operations:

- Grounds

Level	RO	SRO
Tier #	2	
Group #	1	
K/A #	263000A2.01	
Importance Rating	2.8	

Proposed Question: **# 50**

Unit 2 is operating at 100% Reactor Power when a ground is detected on 250 VDC RMOV Board 2A. Ground Isolation steps indicate the ground is in the normal power supply feeder breaker.

The affected board is transferred to its alternate power supply.

Per 0-OI-57D, "DC Electrical System," restrictions apply to DC MOVs that are supplied from a battery that is feeding any RMOV board alternate supply.

Which ONE of the following is an acceptable reason which allows operation of an affected DC MOV?

A. if required to prevent load reduction.

B. to comply with Tech Spec LCO Actions.

C. to perform Preventive Maintenance activities.

D. for Tech Spec Surveillance Testing Requirements.

Proposed Answer: **B**

Explanation (Optional):

A INCORRECT: To prevent load reduction is not identified as an acceptable reason for operation of an affected DC MOV. Plausible in that the unit would want to avoid unnecessary load reduction if possible.

B **CORRECT**: Per 0-OI-57D, "DC Electrical System," Precaution and Limitation 3.0 A. for the conditions identified, no DC MOV may be operated except as required to mitigate accident conditions, to obtain safe shutdown or to comply with Technical Specification LCO action statements.

C INCORRECT: Not allowed as detailed above. Plausible in that the candidate may believe restrictions do not apply for required preventive maintenance activities.

D INCORRECT: Testing (including SI/SR) that requires DC motor operated valve operation is not allowed. Plausible in that operation to comply with Tech Spec LCO actions is acceptable.

Technical Reference(s): 0-OI-57D Rev 121 (Attach if not previously provided)

(Including version / revision number)

Proposed references to be provided to applicants during examination: NONE

Learning Objective: _____ (As available)

Question Source: Bank # _____ Modified Bank # _____ (Note changes or attach parent)

New X

Question History: Last NRC Exam _____

(Optional - Questions validated at the facility since 10/95 will generally undergo less rigorous review by the NRC; failure to provide the information will necessitate a detailed review of every question.)

Question Cognitive Level: Memory or Fundamental Knowledge X

Comprehension or Analysis

10 CFR Part 55 Content: 55.41 X

55.43

Comments:

BFN Unit 0	DC Electrical System	0-OI-57D Rev. 0121 Page 14 of 249

3.0 PRECAUTIONS AND LIMITATIONS

A. In the event a Unit Battery System is removed from service or a 250VDC RMOV Board is transferred to the alternate supply, one or more of the limitations below may apply. If time permits, a Caution Order should be placed on the affected MOV handswitches prior to transfer of board to alternate to prevent violation of these safe shutdown restrictions.

1. In the event any 250VDC RMOV Board is on its alternate supply, the following restrictions apply to DC motor operated valves that are supplied from a battery that is feeding any RMOV board alternate supply:

   a. No DC MOV may be operated except as required to mitigate accident conditions, to obtain safe shutdown or to comply with Technical Specifications(i.e. to comply with LCO ACTIONS statements only).

   b. Testing(including SI/SRs) that requires DC motor operated valve operation is NOT allowed. [Ref. Dwgs. 1-45E701-3, 2-45E702-4, 3-45E703-3]

BFN 0707

Proposed Question: **RO # 52**

A LOCA has occurred on Unit 2 resulting in the following conditions:

- 2-EOI-1, "RPV Control" and 2-EOI-2, "Primary Containment Control" are being executed.
- Drywell Sprays could not be initiated due to logic failures.
- Drywell pressure 15 psig and slowly rising.
- Drywell temperature 305 ^{O}F and steady.
- Suppression Pool level 15.5 feet.
- Suppression pool temperature 140 ^{O}F and steady.
- ADS was manually initiated due to high Drywell temperature.
- The six ADS valves have now closed due to low reactor pressure.
- Normal range level indicates (+) 34 inches.
- Emergency range level indicates (+) 58 inches.
- Shutdown Floodup level indicates (+) 30 inches.

Which ONE of the following describes the current status of RPV level instrumentation?

Reactor water level ___(1)___ be determined. The Shutdown Floodup instrument ____(2)____ be used for trend indication.

REFERENCE PROVIDED

	(1)	(2)
A.	CAN	CAN
B.	CAN	CANNOT
C.	CANNOT	CAN
D.	CANNOT	CANNOT

Examination Outline Cross-reference:

264000 EDGs

K5.05 (10CFR 55.41.5)

Knowledge of the operational implications of the following concepts as they apply to EMERGENCY GENERATORS (DIESEL/JET):

- Paralleling A.C. power sources

Level	RO
Tier #	2
Group #	1
K/A #	264000K5.05
Importance Rating	3.4

Proposed Question: **# 51**

Unit 3 is Operating at 100% Reactor Power, with the following conditions:

- Diesel Generator (D/G) 3C is running unloaded to support testing
- Preparations to parallel **AND** load, with its Shutdown Board, from Panel 3-9-23 are being made
- The synchroscope is rotating slow-in-the-clockwise direction

Which ONE of the following completes the statement?

To maintain the D/G within limits, the Diesel Generator Mode Selector Switch must be in the __**(1)**__ position prior to paralleling. The reason for this is to prevent the D/G from overloading due to Speed Droop being set at __**(2)**__.

A. **(1)** 'SINGLE UNIT'
(2) 5%.

B. **(1)** 'SINGLE UNIT'
(2) 0%.

C. **(1)** 'PARALLED WITH SYSTEM'
(2) 5%.

D. **(1)** 'PARALLED WITH SYSTEM'
(2) 0%.

Proposed Answer: **C**

Explanation (Optional):

A INCORRECT: Part 1 = incorrect, Parallel with System is the correct mode. Part 2 = correct, Speed droop in this mode is 5%.

B INCORRECT: Part 1 = incorrect, Parallel with System is the correct mode. Part 2 = incorrect, Speed droop in this mode is 5%.

C **CORRECT:** Part 1 = correct, Parallel with System is the correct mode. Part 2 = correct, Speed droop in this mode is 5%.

D INCORRECT: Part 1 = correct, Parallel with System is the correct mode. Part 2 = incorrect, Speed droop in this mode is 5%.

Technical Reference(s): OPL171.038 Rev 16 (Attach if not previously provided)

3-OI-82 Rev 87 (Including version / revision number)

Proposed references to be provided to applicants during examination: NONE

Learning Objective: V.B.8 (As available)

Question Source:

Bank #	
Modified Bank #	

(Note changes or attach parent)

New	X

Question History:

Last NRC Exam	

(Optional - Questions validated at the facility since 10/95 will generally undergo less rigorous review by the NRC; failure to provide the information will necessitate a detailed review of every question.)

Question Cognitive Level: Memory or Fundamental Knowledge

Comprehension or Analysis X

10 CFR Part 55 Content: 55.41 X

55.43

Comments: Reviewed Revision 88 to 3-OI-82 and it has no impact on the question.

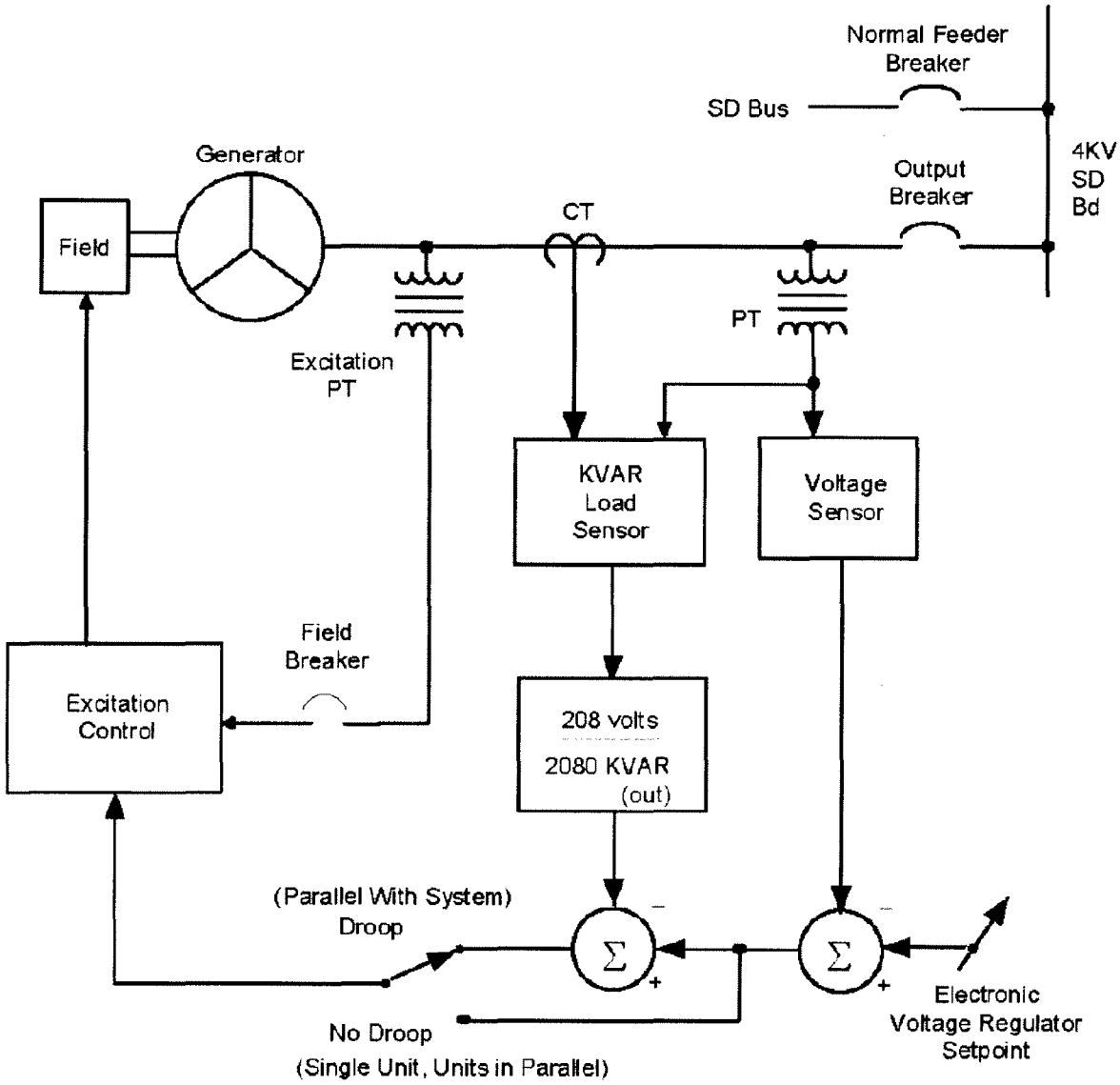
Normal Feeder Breaker
SD Bus
4KV SD Bd
Generator
Output Breaker
CT
Field
PT
Excitation PT
KVAR Load Sensor
Voltage Sensor
Field Breaker
Excitation Control
208 volts
2080 KVAR (out)
(Parallel With System) Droop
No Droop (Single Unit, Units in Parallel)
Electronic Voltage Regulator Setpoint

(2) Operational Mode Switch sets the mode of operation of the speed and voltage regulators.

(a) SINGLE UNIT - Used when the diesel generator is the only supply to the associated Shutdown Board. Speed (frequency) droop (decrease) from zero load KILOWATTS to full rated load KILOWATTS is zero. Voltage droop from zero load OUTGOING KILOVARS is zero. Obj.V.B.8 Obj.V.C.5 Obj.V.D.13 Obj.V.E.13

(i) Any fast start signal or DC control power loss automatically places the mode of operation to SINGLE UNIT mode, without turning on the RED light above the SINGLE UNIT position.

(ii) Regardless of start signal type, pulling up the MODE SELECT handle and placing it in the desired position will change the mode of operation and light up the associated RED LIGHT above the MODE SELECT switch.

(b) UNITS IN PARALLEL - Used when two diesel generators are to be tied together. Speed and voltage droop are identical to SINGLE UNIT mode. Breaker positions are sensed to determine if the diesel generator is operating in parallel with any of the other diesel generators. If so, feedback occurs between speed regulators (and voltage regulators) of the paralleled generators so that stable load sharing operation results. Any additional load placed on the boards will be split evenly between the two diesels. Obj.V.B.8 Obj.V.C.5

(c) PARALLEL WITH SYSTEM - Used when the diesel generator is to be parallel with offsite power. To ensure stable load sharing with grid, speed droop from zero load KILOWATTS to full rated load KILOWATTS is approximately five percent. Obj.V.B.8 Obj.V.C.5

c. Speed Droop Control (Zero Droop Operation)

(1) When the generator is the only power supply to a bus, it is desirable to have the speed governor maintain constant speed and frequency regardless of load on the bus. This is "Zero Droop" operation. The regulator system simply compares generator output frequency and setpoint frequency and actuates the fuel supply to maintain setpoint frequency. In effect for **Single Unit** and **Units in parallel.**

"Zero droop" operation does not consider DG load; only speed/frequency output the DG.

(2) **Zero Droop Operation** results in the speed/frequency remaining constant as KW load is increased.

(3) If the generator were to be tied to the grid, when in **Single Unit** or **Units in parallel**, as soon as the output breaker is shut the speed regulator senses output frequency, but now the generator output frequency is fixed by the other machines on the grid. If the diesel speed setpoint is higher than grid frequency, the zero droop governor will keep advancing the fuel supply to the diesel in order to try and raise grid/DG output frequency to the governor's setpoint. This will cause the diesel to overload. (495 amps.)

(4) **Droop operation** is in effect for **Parallel with System.** In droop mode the load carried by the diesel is sensed in addition to the output frequency. If the speed setpoint is higher than grid frequency, when the output breaker is shut the governor will see generator output frequency as being too low and start advancing fuel. This will cause the generator load to pick up. As load picks up, it sends a negative speed signal back to the regulator which cancels out the difference between grid frequency and setpoint frequency. When this happens the governor will stop advancing fuel and the engine will steady out at a certain amount of load. To pick up additional load the speed setpoint is adjusted upwards and the load builds up until it has canceled out the additional speed setpoint adjustment. If a droop mode generator was the sole supply to a board, its frequency versus kilowatt load would droop.

(5) Droop mode operation of the governor is controlled by the electronic governor and is in use <u>only</u> when the generator mode is "PARALLEL WITH SYSTEM."

(6) The governor control, when in parallel with the grid, serves to control the KILOWATT loading on the machine.

BFN Unit 3	Standby Diesel Generator System	3-OI-82 Rev. 0087 Page 72 of 177

8.1 Parallel with System Operation at Panel 9-23 (continued)

CAUTION

Only one Unit 1 and 2 Diesel Generator at a time is allowed to be operated in parallel with system.

[6] **PULL and PLACE** the associated Diesel Generator mode selector switch in PARALLELED WITH SYSTEM.

Diesel	Handswitch Name	Handswitch No.	Panel
3A	DG 3A MODE SELECT	3-HS-82-3A/5A	3-9-23
3B	DG 3B MODE SELECT	3-HS-82-3B/5A	3-9-23
3C	DG 3C MODE SELECT	3-HS-82-3C/5A	3-9-23
3D	DG 3D MODE SELECT	3-HS-82-3D/5A	3-9-23

Examination Outline Cross-reference:

300000 Instrument Air

K2.01 (10CFR 55.41.7)

Knowledge of electrical power supplies to the following:

- Instrument air compressor

Level	RO
Tier #	2
Group #	1
K/A #	300000K2.01
Importance Rating	2.8

Proposed Question: **# 52**

All Units are operating at 100% Reactor Power, when a momentary undervoltage condition occurs on 480V RMOV Board 2A. Five seconds later, normal voltage is restored.

Which ONE of the following describes the impact of this board loss on the Air System?

A. Control Air Compressors 'B' **AND** 'C' will trip. **BOTH** will need to be re-started locally.

B. Service Air Compressors 'E' **AND** 'F' will trip. **BOTH** will need to be re-started locally.

C. Control Air Compressor 'A' will trip, **AND** will automatically re-start when normal voltage is sensed.

D. Control Air Compressor 'G' will trip, **AND** will **NOT** automatically re-start when normal voltage is sensed.

Proposed Answer: **D**

Explanation (Optional):

A INCORRECT: B & C compressors are powered from 480V Common Bd 1, which is not affected by this event. Air Compressor G is powered from 4vk SD Bd B / 480v RMOV Bd 2A, which **is** affected by this event.

B INCORRECT: E & F compressors are powered from 480V Common Bd 3, which is not affected by this event. Air Compressor G is powered from 4vk SD Bd B / 480v RMOV Bd 2A, which **is** affected by this event.

C INCORRECT: A compressor is powered from 480V SD Bd 1B, which is not affected by this event. Air Compressor G is powered from 4vk SD Bd B / 480v RMOV Bd 2A, which **is** affected by this event.

D **CORRECT:** Air Compressor G is powered from 4vk SD Bd B / 480v RMOV Bd 2A, which **is** affected by this event. The 'G' compressor power loss logic is set @ 4 seconds on a loss of 480v RMOV Bd 2A. Transfer of the RMOV Bd is a Manual action, thus > 4 seconds will have transpired prior to the transfer.

Technical Reference(s): OPL171.054 Rev 13 (Attach if not previously provided)

0-OI-57B Rev 181 (Including version / revision number)

Proposed references to be provided to applicants during examination: NONE

Learning Objective: V.B.1 (As available)

Question Source: Bank # ____ Modified Bank # ____ (Note changes or attach parent)

New X

Question History: Last NRC Exam ____

(Optional - Questions validated at the facility since 10/95 will generally undergo less rigorous review by the NRC; failure to provide the information will necessitate a detailed review of every question.)

Question Cognitive Level: Memory or Fundamental Knowledge

Comprehension or Analysis X

10 CFR Part 55 Content: 55.41 X

55.43

Comments: Reviewed Rev 181 of 0-OI-57B. The latest revision of this procedure has no impact on the question.

OPL171.054 r13

3. Control Air System Component Description

a. Four Reciprocating Air Compressors **A-D** (2-stage, double acting, Y-type) are located El 565, U-1 Turbine Building.

(1) Supply air to the control air receivers at 610 scfm each at a normal operating pressure of 90 - 101 psig

(2) 480V, 60 Hz, 3-phase, drive motors

(3) Power supplies

A from **480V Shutdown Board 1B** DCN 17780

D from **480V Shutdown Board 2A**

B from **480V Common Board 1**

C from **480V Common Board 1**

(a) Control air compressors which are powered from the 480 VAC shutdown boards are tripped automatically due to: Obj. V.B.1 Obj. V.C.1

i. under voltage on the shutdown board

ii. load shed logic during an accident signal concurrent with a loss of offsite power

NOTE: The compressors must be restarted manually after power is restored to the board.

(b) Units powered from common boards also trip due to under voltage

iv. The primary controller power is auctioneered from one of three sources:

- **480VAC Shutdown Board 1A,**
- **480VAC Shutdown Board 2A**
- **480VAC Common Board 1**

Same power supply as for air compressors

(c) Each power supply has a 480VAC to 120VAC transformer. — 0-45E769-5

(d) The backup controller 0-PIC-032-0002 loads and unloads the compressors at the same control air header pressure setpoints as the primary controller. — TP-4

(e) When the backup is in control compressor **A** will run at full load, **B**, **C**, & **D** will load and unload at 1.5 psig increments, in alphabetical order as pressure falls and rises. — Independent of selector switch position

(f) The backup controller is powered from 250 VDC control power on **480 VAC Common Board 1**

e. **G** Air Compressor - centrifugal type, two stage

(1) Located 565' EL Turbine Bldg., Unit 1 end. Control Air Compressor **G** is the primary control air compressor and provides most of the control air needed for normal plant operation.

(2) Rated at 1445 SCFM @ 120 psig.

(3) Power Supply

(a) **4 kV Shutdown Board B** supplies power to the compressor motor.

(b) **480 V RMOV Bd. 2A** Supplies the following:

- Pre lube pump
- Oil reservoir heater
- Cooling water pumps
- Panel(s) control power
- Auto Restart circuit

(c) Except for short power interruptions on the **480v RMOV Bd**, Loss of <u>either</u> of these two power supplies will result in a shutdown of the **G** air compressor.

(d) With the **G** air compressor **AUTO START** selector switch in **ON** the compressor will automatically restart if there is a momentary interruption of power (< 4 seconds) of the **480v RMOV board 2A**. (see 0-OI-32) — DCN F41321A Power interruptions > 4 seconds will lock out the Auto Restart circuit and trip the compressor.

i. This feature was designed to maintain Control Air Compressor **G** operation during board transfers and momentary interruptions in power involving **480V RMOV Board 2A**. — The feed from **4KV Shutdown Board B** to the compressor motor is <u>not</u> affected by the auto restart circuit.

ii. If power is <u>NOT</u> restored within 4 seconds, the compressor will trip and must be manually restarted when power is restored. — TP-7

3. Component Description — Obj. V.E.6

a. Compressors **E** and **F** (EL 565, U-3 Turbine Building) are designated for service air. — Obj. V.D.4

b. The **F** air compressor is rated for approximately 630 SCFM @ 105 psig, centrifugal type, 2 stages

c. The power supply for both compressors is **480VAC Common Board 3**.

BFN Unit 0	480V/240V AC Electrical System	0-OI-57B Rev. 0181 Page 106 of 111

Illustration 1
(Page 8 of 9)

Auxiliary Power Supplies and Bus Transfer

ITEM	BOARD AND/OR MAIN BUS	NORMAL	ALTERNATE 1	ALTERNATE 2	REMARKS
14	480V Reactor MOV Boards				
	A. 480V Reactor MOV BD A (Unit 1,2,3	480V Shutdown Board A (Unit 1,2,3)	480V Shutdown Board B (Unit 1,2,3)		Transfer from normal to alternate source is manual. Interlocking is provided to prevent manually transferring to a faulted board and to prevent paralleling two sources.
	B. 480V Reactor MOV BD B (Unit 1,2,3	480V Shutdown Board B (Unit 1,2,3)	480V Shutdown Board A (Unit 1,2,3)		
	C 480V Reactor MOV	480V Shutdown Board B (Unit 1,2,3)	480V Shutdown Board A (Unit 1,2,3)		
	D. 480V Reactor MOV BD D (Unit 2,3)	480-V Shutdown BD A-LPCI MG Set DN (Unit 2,3)	480-V Shutdown BD B-LPCI MG Set DA (Unit 2,3)		Automatic transfer from normal to alternate MG set is initiated by loss of AC to the Boards. transfer after a twenty four (24) second time delay
	E. 480V Reactor MOV BD E (Unit 2,3)	480-V Shutdown BD B-LPCI MG Set EN (Unit 2,3)	480-V Shutdown BD A-LPCI MG Set EA (Unit 2,3)		

Examination Outline Cross-reference:

400000 Component Cooling Water

A1.01 (10CFR 55.41.5)

Ability to predict and/or monitor changes in parameters associated with operating the COMPONENT COOLING WATER SYSTEM controls including:

- CCW flow rate

Level	RO
Tier #	2
Group #	1
K/A #	400000A1.01
Importance Rating	2.8

Proposed Question: **# 53**

Which ONE of the following completes the statement?

Due to potential buildup of silt on check valves, __**(1)**__will normally be aligned to __**(2)**__.

A. **(1)** EECW
(2) ALL Shutdown Board Room Chillers.

B. **(1)** EECW
(2) ALL Control **AND** Service Air Compressors.

C. **(1)** Raw Cooling Water
(2) ALL Residual Heat Removal Pump Seal Coolers.

D. **(1)** Raw Cooling Water
(2) ALL Drywell Hydrogen / Oxygen Analyzers.

Proposed Answer: **A**

Explanation (Optional):

A **CORRECT:** Per 1-OI-24, 3.0.O, EECW should be aligned to the SD Bd Rm Chillers, due to low flow concerns on silt buildup.

B INCORRECT: EECW operates at a higher pressure and flow rate compared to RCW. EECW does not render the same silting concerns.

C INCORRECT: RCW does not supply the seal coolers. EECW is the source.

D INCORRECT: Units 2 & 3 are supplied by EECW. Unit 1 is a different style analyzer.

Technical Reference(s): 1-OI-24 Rev 48 (Attach if not previously provided)

OPL171.051 Rev 16

Proposed references to be provided to applicants during examination: NONE

Learning Objective: _____ (As available)

Question Source:

Bank #	
Modified Bank #	
New	X
Last NRC Exam	

(Note changes or attach parent)

Question History:

(Optional - Questions validated at the facility since 10/95 will generally undergo less rigorous review by the NRC; failure to provide the information will necessitate a detailed review of every question.)

Question Cognitive Level: Memory or Fundamental Knowledge X

Comprehension or Analysis

10 CFR Part 55 Content: 55.41 X

55.43

Comments:

BFN Unit 1	Raw Cooling Water System	1-OI-24 Rev. 0048 Page 8 of 42

3.0 PRECAUTIONS AND LIMITATIONS (continued)

O. Due to silt and debris buildup on the RCW Check valves, the Shutdown Board Room Chillers should **NOT** be aligned to RCW for their cooling medium. The Shutdown board Room Chillers should have EECW aligned to them while they are in service.

	Isolation functions for the valves	
6	EECW loads have preset flow rates established Throttle valves are locked to ensure the flow balance is not disrupted. Loads are as follows	Obj. V.B.4 Obj. V.C.3 Obj. V.D.3 & 8 Obj. V.E.5
a.	Core Spray room coolers	
b.	Residual Heat Removal room coolers	
c.	Drywell H_2 and O_2 Analyzers (Unit 2 & 3 only)	
d.	Residual Heat Removal pump seal coolers	
e.	Diesel Generator engine coolers	D/G Hx inlet valve is throttled due to HX not rated for EECW pressure
f.	Unit 3 Control Bay chillers	
g.	Unit 3 electric board room ACU condensers	
h.	Unit 3 Shutdown Board room chillers	
i.	RBCCW system heat exchangers (backup supply)	
j.	Control air compressors (backup supply)	
k.	Unit 1 and 2 emergency chiller (valves are locked shut)	

Examination Outline Cross-reference:

201001 CRD Hydraulic

K6.04 (10CFR 55.41.7)

Knowledge of the effect that a loss or malfunction of the following will have on the CONTROL ROD DRIVE HYDRAULIC SYSTEM:

- RPS

Level	RO
Tier #	2
Group #	2
K/A #	201001K6.04
Importance Rating	3.6

Proposed Question: **# 54**

Unit 2 is operating at 100% Reactor Power when a grid perturbation caused the loss of RPS Channels 'A' **AND** 'B'.

Which ONE of the following describes the effects on the Control Rod Hydraulic (CRDH) System during this transient?

FLOW CONTROL VALVE, 1-FCV-85-11A (B), travels __**(1)**__ due to increased flow on the __**(2)**__ water header.

A. **(1)** OPEN
(2) charging

B. **(1)** OPEN
(2) exhaust

C. **(1)** CLOSED
(2) charging

D. **(1)** CLOSED
(2) exhaust

Proposed Answer: **C**

Explanation (Optional):

A INCORRECT: Part 1 = incorrect, water is diverted to the **charging** header, to re-charge the accumulators. This causes the FCVs to **close**, based on the location of the FE. Plausible in that candidate may think flow element is located downstream of the Flow Control Valve. Part 2 = correct, flow increased to charging water header with all scram valves open.

B INCORRECT: Part 1 = incorrect, water is diverted to the charging header, to re-charge the accumulators. This causes the FCVs to **close**, based on the location of the FE. Part 2 = incorrect, exhaust header flow is unaffected. Plausible in that could be confused with Scram Discharge header flow.

C **CORRECT:** Part 1 = correct, water is diverted to the charging header, to re-charge the accumulators. This causes the FCVs to close, based on the location of the FE. Part 2 = correct, a RO limits flow to prevent runout.

D INCORRECT: Part 1 = correct, water is diverted to the **charging** header, to re-charge the accumulators. This causes the FCVs to close, based on the location of the FE. Part 2 = incorrect, as detailed above.

Technical Reference(s): OPL171.005 Rev 16 (Attach if not previously provided)

(Including version / revision number)

Proposed references to be provided to applicants during examination: NONE

Learning Objective: V.B.11 (As available)

Question Source: Bank # ____ Modified Bank # ____ (Note changes or attach parent)

New X

Question History: Last NRC Exam ____

(Optional - Questions validated at the facility since 10/95 will generally undergo less rigorous review by the NRC; failure to provide the information will necessitate a detailed review of every question.)

Question Cognitive Level: Memory or Fundamental Knowledge X

Comprehension or Analysis

10 CFR Part 55 Content: 55.41 X

55.43

Comments:

(8) System pressure control

(a) Accumulator charging line

i. Purpose - supply charging water to the HCU accumulators and to supply the RWCU pumps with seal water.

ii. The charging line has a check valve installed so that if the pumps fail, the accumulators are held charged by the check valve, which prevents backflow of water from the HCU to the CRD Hydraulic System.

(b) Runout protection

i. During a scram, the HCU accumulators will be fully discharged. — Obj. V.B.11, Obj. V.D.11

			INSTRUCTOR NOTES
	ii.	The CRD pump will try to recharge all the accumulators at once. Flow through the charging header will cause the flow control valves to close.	
	iii.	To prevent pump runout and probable tripping of the pump motor on over-current, a restricting orifice is provided to limit the maximum rate of recharging to 179 gpm. (Maximum flow is with the reactor at atmospheric pressure).	**Q:** What is a good indication of pump runout? **A:** Indication of pump runout is high current on the CRDH pumps SER-3-05
	iv.	A throttle valve downstream of the restricting orifice is provided to provide additional throttling if required.	
	v.	The accumulators cannot be recharged until the scram is reset (with the scram inlet and outlet valves closed) due to drive seal leakage being greater than pump capacity.	SER 3-05 Charging pressure will be approximately equal to reactor pressure
(c)	Charging water pressure is independent of reactor vessel pressure. and is set by manually positioning the pump discharge throttling valve between 1475-1500 psig per OI-85.		

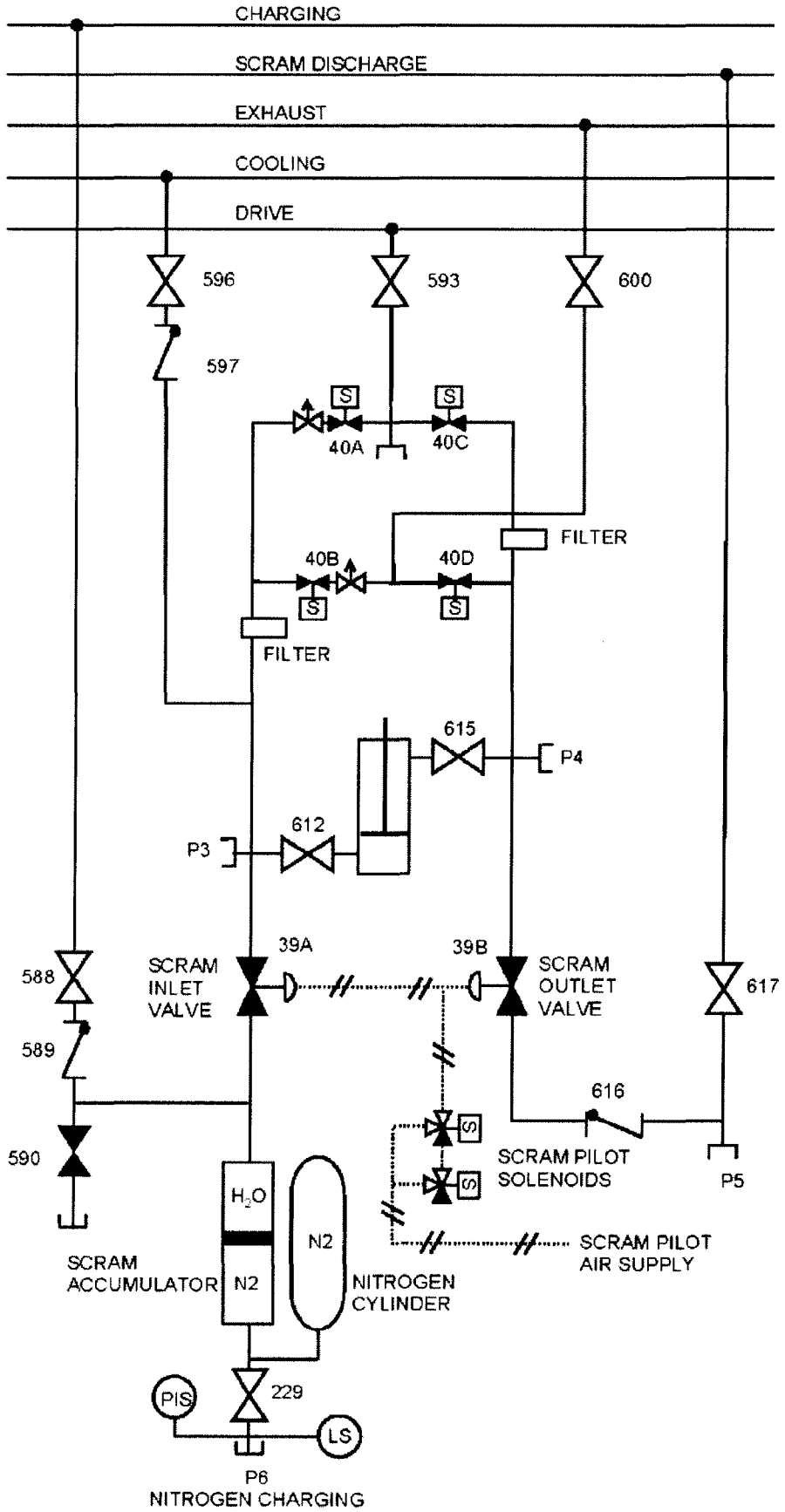

TP-13 CRD Hydraulic Control Unit

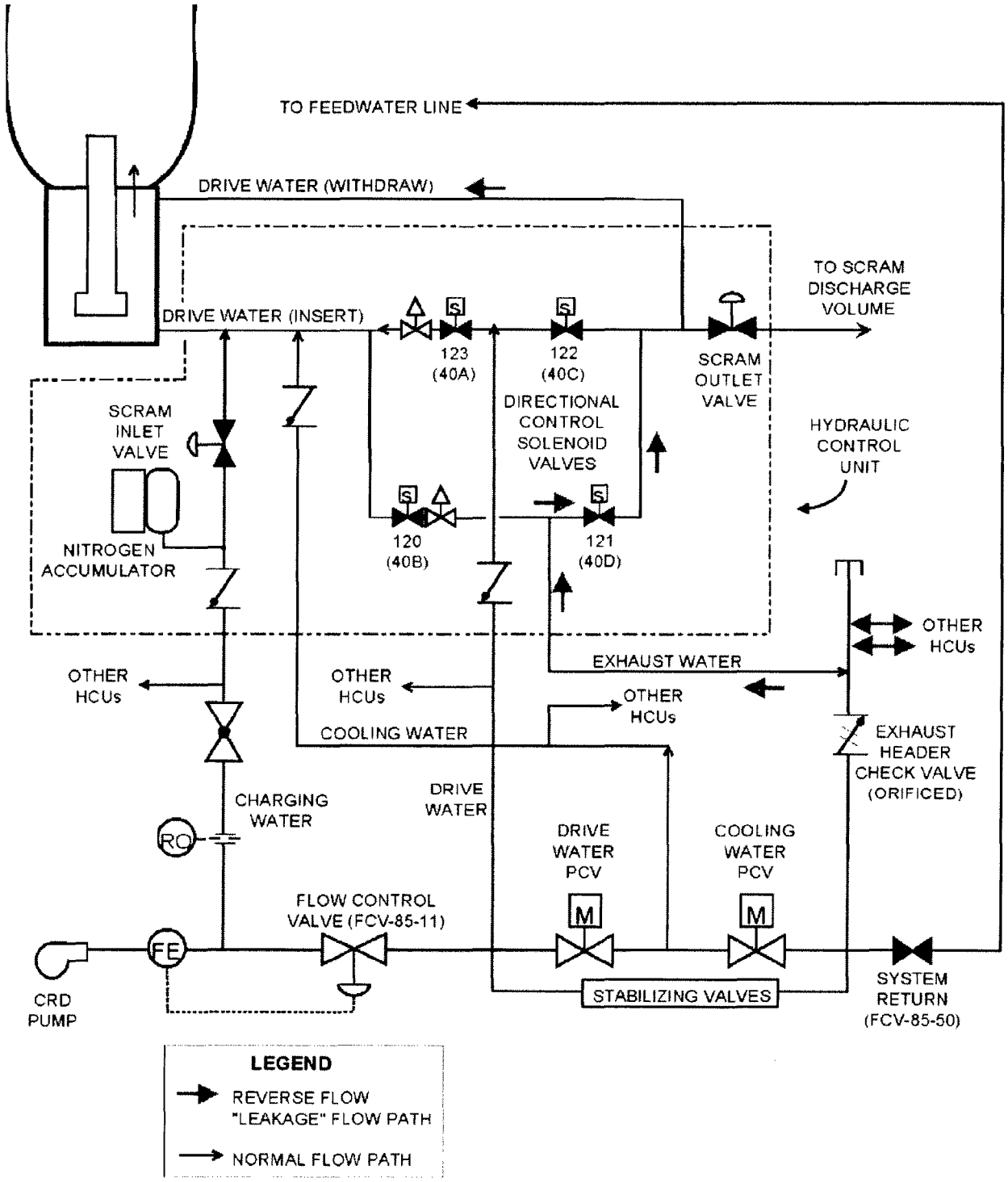

TP-3 Cooling And Exhaust Water Flow Path

Examination Outline Cross-reference:

215001 Traversing In-core Probe

A3.03 (10CFR 55.41.7)

Ability to monitor automatic operations of the TRAVERSING IN-CORE PROBE including:

- Valve operation: Not-BWR1

Level	RO	SRO
Tier #	2	
Group #	2	
K/A #	215001A3.03	
Importance Rating	2.5	

Proposed Question: **# 55**

Unit 1 is operating in Mode 4, with the following conditions:

- Traversing Incore Probe (TIP) testing is in progress
- TIP Channel 'E' is currently located at the 'Top of Core' position
- An inadvertent Group 8 Isolation occurs

Which ONE of the following completes the statement?

Based on the above conditions, TIP 'E' will retract to the _____.

A. 'PARKED' position **AND** the Ball Valve will automatically close.

B. 'PARKED' position **AND** the Ball Valve will **NOT** automatically close.

C. 'IN SHIELD' position **AND** the Ball Valve will automatically close.

D. 'IN SHIELD' position **AND** the Ball Valve will **NOT** automatically close.

Proposed Answer: **C**

Explanation (Optional):

A INCORRECT: Per 1-AOI-64-2E, on a Group 8 signal, an AUTO withdraw signal is actuated. The TIP is withdrawn to the 'in-shield' position, not 'parked.' For the ball valve to close, it must be in the 'in-shield' position.

B INCORRECT: Per 1-AOI-64-2E, on a Group 8 signal, an AUTO withdraw signal is actuated. The TIP is withdrawn to the 'in-shield' position, not 'parked.' For the ball valve to close, it must be in the 'in-shield' position.

C **CORRECT:** Per 1-AOI-64-2E, on a Group 8 signal, an AUTO withdraw signal is actuated. The TIP is withdrawn to the 'in-shield' position. For the ball valve to close, it must be in the 'in-shield' position.

D INCORRECT: Per 1-AOI-64-2E, on a Group 8 signal, an AUTO withdraw signal is actuated. The TIP is withdrawn to the 'in-shield' position. For the ball valve to close, it must be in the 'in-shield' position.

Technical Reference(s): OPL171.17 Rev 13 (Attach if not previously provided)

1-AOI-64-2E Rev 0 (Including version / revision number)

Proposed references to be provided to applicants during examination: NONE

Learning Objective: V.B.4 / V.B.5 (As available)

Question Source:

Bank #	
Modified Bank #	
New	X
Last NRC Exam	

(Note changes or attach parent)

Question History:

(Optional - Questions validated at the facility since 10/95 will generally undergo less rigorous review by the NRC; failure to provide the information will necessitate a detailed review of every question.)

Question Cognitive Level: Memory or Fundamental Knowledge

Comprehension or Analysis X

10 CFR Part 55 Content: 55.41 X

55.43

Comments:

INSTRUCTOR NOTES

7. Group 8

This group provides for isolation of the five Traversing Incore Probe (TIP) Guide Tubes via solenoid operated ball valves. Signals which initiate a Group 8 isolation are:

- RPV Low Level (+2" or Level 3)
- Drywell High Pressure (2.45 psig)

Obj. V.B.2
Obj. V.C.2
Gives TIP auto withdraw signal then closes the ball valve
Blue light on normal

BFN Unit 1	Traversing Incore Probe Isolation	1-AOI-64-2e Rev. 0000 Page 3 of 7

3.0 AUTOMATIC ACTIONS

[1] **IF** a Group 8 isolation occurred, **THEN** the following are automatic actions:

- **IF** TIP probes are outside their shields, **THEN** TIP withdrawal initiated to IN-SHIELD position.
- TIP Ball Valves receive a close signal, or close after TIP probes are withdrawn to their IN-SHIELD position.
- TIP Purge Valves closes (no indications provided).

Examination Outline Cross-reference:	Level	RO
215002 RBM	Tier #	2
K1.02 (10CFR 55.41.6)	Group #	2
Knowledge of the physical connections and/or cause-effect relationships between ROD BLOCK MONITOR SYSTEM and the following:	K/A #	215002K1.02
• LPRM: BWR-3,4,5	Importance Rating	3.2

Proposed Question: **# 56**

Which ONE of the following sets of attributes best describes the Rod Block Monitoring System?

A. Uses inputs from **SELECTED** LPRMs to generate a Control Rod block;
Blocks Control Rod withdrawal prior to exceeding MCPR limits;
Receives inputs from Simulated Thermal Power Level of each APRM Channel.

B. Uses continuous input from **ALL** LPRMs to generate a Control Rod block;
Blocks Control Rod withdrawal prior to exceeding LHGR limits;
Receives inputs from Simulated Thermal Power Level of each APRM Channel.

C. Uses continuous input from **ALL** LPRMs to generate a Control Rod block;
Blocks Control Rod withdrawal prior to exceeding MCPR limits;
Receives an average input from the Recirc Flow Monitor Channel circuit, to generate a Control Rod Block.

D. Uses inputs from **SELECTED** LPRMs to generate a Control Rod block;
Blocks Control Rod withdrawal prior to exceeding LHGR limits;
Receives an average input from the Recirc Flow Monitor Channel circuit, to generate a Control Rod Block.

Proposed Answer: **A**

Explanation (Optional):

A **CORRECT:** Part 1 = correct, only from LPRMs surrounding the selected rod. Part 2 = correct, MCPR is the safety limit of concern. Part 3 = correct, receives input from STP for rod block purpose.

B INCORRECT: Part 1 = incorrect, only from LPRMs surrounding the selected rod. Part 2 = correct, RBM is also designed to prevent 1% plastic strain fuel design limit. Part 3 = correct, receives input from STP for rod block purpose.

C INCORRECT: Part 1 = incorrect, only from LPRMs surrounding the selected rod. Part 2 = correct, MCPR is the safety limit of concern. Part 3 = incorrect, receives input from STP for rod block purpose. Each RBM receives the 4 Total Recic Flow values from each APRM, not the average.

D INCORRECT: Part 1 = correct, only from LPRMs surrounding the selected rod. Part 2 = correct, RBM is also designed to prevent 1% plastic strain fuel design limit. Part 3 = incorrect, receives input from STP for rod block purpose. Each RBM receives the 4 Total Recic Flow values from each APRM, not the average.

Technical Reference(s): OPL171.148 Rev 9 (Attach if not previously provided)

TS 3.3.2.1 Bases (Including version / revision number)

Proposed references to be provided to applicants during examination: NONE

Learning Objective: V.B.8 (As available)

Question Source: Bank # ____ Modified Bank # ____ (Note changes or attach parent)

New X

Question History: Last NRC Exam ____

(Optional - Questions validated at the facility since 10/95 will generally undergo less rigorous review by the NRC; failure to provide the information will necessitate a detailed review of every question.)

Question Cognitive Level: Memory or Fundamental Knowledge X

Comprehension or Analysis

10 CFR Part 55 Content: 55.41 X

55.43

Comments:

OPL171.148
Revision 9
Page 67 of 135

F. RBM

See OI-92C for current RBM set points

1. Purpose

Obj. V.B.20
Obj. V.D.9

a. The general purpose of the RBM is to

(1) Monitor the average power immediately around the selected (for movement) control rod.

(2) To provide information outputs and, if the average changes beyond a predefined value to provide rod with channel block should low/high power be detected.

The allowed change in the average is a function only of the APRM's STP level.

b. During high power operation, the RBM provides protection for Control Rod Withdrawal Error (CRWE) events.

c. The RBM provides

(1) The communication path for APRM information to the plant computer, and provides the path for downloading LPRM and APRM gain adjustment factors and reference values.

(2) The RBM performs the flow comparison function by comparing the total recirculation flow signals from each APRM channel.

d. The RBM System ensures that the CRWE will never be the limiting transient

e The RBM provides continuous display of RBM signals to the operator as an indication of local power change during rod movement.

2 Description TP-19

a The RBM system consists of two redundant channels.

b. The RBM Instrument receives the Simulated Thermal Power Level (STP) from each of the APRM Channels using the high-speed fiber optic communication links. V B 21 V C 6

c. The RBM System blocks erroneous control rod withdrawal initiated by the operator before the safety limit MCPR is violated.

c The RBM System blocks erroneous control rod withdrawal initiated by the operator before the safety limit MCPR is violated.

Whenever any control rod in the core might violate this limit upon complete withdrawal, operability of the RBM System is required.

d. MCPR values determine the required margin for full withdrawal of any control rod. The set points are directly related to a specific MCPR operating limit for the cycle.

For a higher MCPR value, a corresponding higher set point is applied.

e. A single RBM channel consists of an RBM chassis and an RBM Interface (I/F) Module.

g The average of the LPRM input signals yields an instantaneous average neutron flux value neutron flux signal

(1) This average flux value is filtered to produce a Simulated Thermal Power (STP) signal STP signal

(2) The STP signal is used by the APRM for flow biased rod blocks and scram set points.

(3) The STP is also used by the RBM for reference APRM power level

	i.	Recirculation Flow Monitor	Obj. V.B.9, Obj. V.D.5 Obj. V.B.11
	(1)	Each flow monitor channel consists of two flow inputs used to calculate a Total Recirculation Flow, one from Recirculation Loop A and one from Recirculation Loop B.	
	(2)	Each APRM receives the inputs from two (4 to 20 mA) differential pressure (ΔP) transmitters used to measure the recirculation loop flows.	Displays on Input Status display
	(3)	When the ma current is less than 4.0 ma, the recirculation flow value is set to zero (0.0%).	
	(4)	The loop flow continues to be calculated when the ma current is above 20.0 ma (i.e., the value is not clamped at 125.0% flow)	
	(5)	The flow monitor is considered INOP whenever loop current is less than 1.0 ma or greater than 25.0 ma.	
	(6)	Each RBM receives the four Total Recirculation Flow values from the APRM channels to determine the status of the flow compare alarm.	

BASES (continued)

APPLICABLE SAFETY ANALYSES, LCO, and APPLICABILITY

1. Rod Block Monitor

The RBM is designed to prevent violation of the MCPR SL and the cladding 1% plastic strain fuel design limit that may result from a single control rod withdrawal error (RWE) event. The analytical methods and assumptions used in evaluating the RWE event are summarized in References 3, 12, and 13. A statistical analysis of RWE events was performed to determine the RBM response for both channels for each event. From these responses, the fuel thermal performance as a function of RBM Allowable Value was determined. The Allowable Values are chosen as a function of power level. Based on the specified Allowable Values, operating limits are established.

Examination Outline Cross-reference:

219000 RHR/LPCI: Torus/Pool Cooling Mode

K2.02 (10CFR 55.41.7)

Knowledge of electrical power supplies to the following:

- Pumps

Level	RO
Tier #	2
Group #	2
K/A #	219000K2.02
Importance Rating	3.1

Proposed Question: **# 57**

Which ONE of the following completes the statement?

The power supply for RHR Pump 1B is from 4 kV Shutdown Board __**(1)**__ **AND** its associated RHR SYS II SUPPR POOL CLG/TEST VLV, 1-FCV-74-73, is from 480 RMOV Board __**(2)**__.

A. **(1)** B
(2) 1E.

B. **(1)** B
(2) 1B.

C. **(1)** C
(2) 1E.

D. **(1)** C
(2) 1B.

Proposed Answer: **D**

Explanation (Optional):

A INCORRECT: part 1 = incorrect, Powered from 4 kV Shutdown Board C. Plausible in that A and D RHR Pumps are fed from 4 kV Shutdown Board A and D respectively but RHR B and C are fed from 4 kV Shutdown Boards C and B respectively. Part 2 = incorrect, 1-FCV-74-73 is powered from 480 RMOV Board 1B. Plausibility plays on Unit difference in that RHR System II Unit 2 and 3 have motor operated valves fed from the 480 RMOV Board E

B INCORRECT: part 1 = incorrect as explained above Part 2 = correct, 1-FCV-74-73 is powered from 480 RMOV Board 1B

C INCORRECT: part 1 = correct, Powered from 4 kV Shutdown Board C Part 2 = incorrect, as explained above

D **CORRECT:** part 1 = correct, RHR Pump 1B is powered from 4 kV Shutdown Board C Part 2 = correct, 1-FCV-74-73 is powered from 480 RMOV Board 1B

Technical Reference(s): OPL171.044 Rev 16 (Attach if not previously provided)

1-OI-74 Attachment 3 (Including version / revision number)

Proposed references to be provided to applicants during examination: NONE

Learning Objective: V.B.13 (As available)

Question Source: Bank # ____ Modified Bank # ____ (Note changes or attach parent)

New X

Question History: Last NRC Exam ____

(Optional - Questions validated at the facility since 10/95 will generally undergo less rigorous review by the NRC; failure to provide the information will necessitate a detailed review of every question.)

Question Cognitive Level: Memory or Fundamental Knowledge X

Comprehension or Analysis

10 CFR Part 55 Content: 55.41 X

55.43

Comments:

OPL171.044
Revision 16

a. Power supplies — Obj. V.B.5

Obj. V.C.3
Obj. V.E.4

Component	Division	Power Supply	Diesel
U1/2 RHR A	I	Shutdown Board A	1/2 A
U1/2 RHR C	I	Shutdown Board B	1/2 B
U1/2 RHR B	II	Shutdown Board C	1/2 C
U1/2 RHR D	II	Shutdown Board D	1/2 D
U3 RHR A	1	Shutdown Bd 3EA	3A
U3 RHR C	1	Shutdown Bd 3EB	3B
U3 RHR B	II	Shutdown Bd 3EC	3C
U3 RHR D	II	Shutdown Bd 3ED	

Right train/ component
Remember that the B and C pumps come off the C and B shutdown boards respectively.
BFN events have occurred due to racking out the wrong breaker which resulted in LCO 3.0.3
BFPER-997296
See OPL171.045 for details.
TP-10, 11 and 12

480 RMOV BOARD	NORMAL POWER	DIV	ALT POWER	DIV	VALVES
"A"	480V S/D "A"	I	480V S/D "B"	II	RHR Sys I valves (except as

					noted)
"B"	480V S/D "B"	II	480V S/D "A"	I	RHR Sys II valves (except as noted)
"C"	480V S/D "B"	II	480V S/D "A"	I	none
"D" **	"DN" MG Set	I	"DA" MG Set	II	74-7 & 53
"E" **	"EN" MG Set	II	"EA" MG Set	I	74-30 & 67

- ** Unit 1 does not have RMOV Bd 'D' or 'E'. The loads on 'D' Bd are fed from 1A Bd and 'E' are fed from 1B Bd
- Outboard Shutdown Cooling Isolation Valve FCV-74-47 is powered from 250 VDC MOV Board A.

BFN Unit 1	**Residual Heat Removal System** **Electrical Lineup Checklist Unit 1**	**1-OI-74 Attachment 3 Performed On _____ Effective Date: 11-02-2007 Page 3 of 16**

	Control Bay - 4160V Shutdown Bd C - El 621'		
17	1-BKR-074-0028 RHR PUMP 1B	OPEN	____ ____
	1-HS-074-0028C RHR PUMP 1B	OPEN	____ ____
	1-43-074-0028 RHR PUMP 1B TRANSFER	NORM	____ ____

Control Bay - 480V RMOV Bd 1B - El 593'

13E	1-BKR-074-0106 RHR SYSTEM II FLUSH VALVE	ON	____ ____
19C	1-BKR-074-0101 UNITS 1-2 DISCHARGE CROSSTIE	OFF(4)	____ ____
	1-HS-074-0101C UNITS 1-2 DISCHARGE CROSSTIE	OFF	____ ____
	1-XS-074-0101 UNITS 1-2 DISCHARGE CROSSTIE	NORMAL	____ ____
R10A	1-BKR-074-0067 RHR SYSTEM II LPCI INBD INJ VLV	ON	____ ____
	1-HS-074-0067C RHR SYSTEM II LPCI INBD INJ VLV	OFF	____ ____
	1-XS-074-0067 RHR SYSTEM II LPCI INBD INJ VLV XFER	NORM	____ ____
R11C	1-BKR-074-0073 RHR SYSTEM II SUPPR POOL CLG/TEST VLV	ON	____ ____
	1-HS-074-0073C RHR SYSTEM II SUPPR POOL CLG/TEST VLV	OFF	____ ____
	1-XS-074-0073 RHR SYSTEM II SUPPR POOL CLG/TEST VLV XFER	NORM	____ ____

Examination Outline Cross-reference:

239003 MSIV Leakage Control

K4.02 (10CFR 55.41.7)

Knowledge of MSIV LEAKAGE CONTROL SYSTEM design feature(s) and/or interlocks which provide for the following:

- Performance of intended safety function following any single active component failure: BWR-4,5,6(P-Spec)

Level	RO
Tier #	2
Group #	2
K/A #	239003K4.02
Importance Rating	3.0

Proposed Question: **# 58**

Unit 1 was operating at 100% Reactor Power, when an inadvertent PCIS Group I Isolation occurred. **ALL** systems performed as designed with the exception of MSIV LINE A OUTBOARD VALVE, 1-FCV-1-15, which failed to close.

The Unit Operator then reports the following alarm:

- DRYWELL RADIATION HIGH, (1-9-7C, Window 15)

Based on the above conditions, which ONE of the following describes why MSIV Leakage Control would be established?

To provide a manually-aligned, seismically rugged _____.

A. NORMAL pathway for leakage through the Main Steam lines to the turbine, thus allowing Tech Spec MSIV allowable leakage to be increased.

B. ALTERNATE pathway for leakage through the Main Steam lines to the turbine, thus preventing TRM MSIV allowable leakage from being exceeded.

C. NORMAL pathway for leakage through the Main Steam Line Drain valves to the condenser, thus preventing TRM MSIV allowable leakage from being exceeded.

D. ALTERNATE pathway for leakage through the Main Steam Line Drain valves to the condenser, thus allowing Tech Spec MSIV allowable leakage to be increased.

Proposed Answer: **D**

Explanation (Optional):

A INCORRECT: 1-FCV-1-58 & 59 must be manually opened to align to the Mn Condenser, **not** to the turbine. The system is designed to allow for increased allowable MSIV leakage limits.

B INCORRECT: 1-FCV-1-58 & 59 must be manually opened to align ALTERNATE pathway to the Mn Condenser. The system is designed to allow for increased allowable MSIV leakage limits, not from being exceeded.

C INCORRECT: 1-FCV-1-58 & 59 must be manually opened to align to the Mn Condenser. This is not a NORMAL pathway per the design bases.

D **CORRECT:** 1-FCV-1-58 & 59 must be manually opened to align an ALTERNATE pathway to the Mn Condenser. T.S 3.3.6.1 limits were revised (raised) once this system was implemented.

Technical Reference(s): OPL171.009 Rev 10 (Attach if not previously provided)

1-9-7C Rev 20 (Including version / revision number)

Proposed references to be provided to applicants during examination: NONE

Learning Objective: V.B.15 (As available)

Question Source: Bank # / Modified Bank # (Note changes or attach parent)

New X

Question History: Last NRC Exam

(Optional - Questions validated at the facility since 10/95 will generally undergo less rigorous review by the NRC; failure to provide the information will necessitate a detailed review of every question.)

Question Cognitive Level: Memory or Fundamental Knowledge X

Comprehension or Analysis

10 CFR Part 55 Content: 55.41 X

55.43

Comments:

d	MSIV (ALT) LEAKAGE CONTROL		Obj V.B.15 Obj V.C.9 Obj V.E.13
	1)	Each BFN unit apply a seismically rugged alternative leakage control path for MSIV leakage during a postulated LOCA.	
	2)	The flow path is through FCV-1-168, 169,170,171 from each MSL and continues through FCV-1-57,58,59 to the main condenser.	
	3)	This pathway includes Main Steam and Main Steam drain piping that acts as a boundary volume to contain the MSIV leakage and direct it via the ALT pathway to the condenser.	
	4)	This ALT pathway to contain and direct MSIV leakage is a requirement per Tech Spec amendment for increasing allowable MSIV leakage to less than or equal to 100 scfh per valve with the total for all four main steam lines not to exceed 150 scfh when tested at greater than or equal to 25 psig.	All 3 units have the change in allowable MSIV leakage.

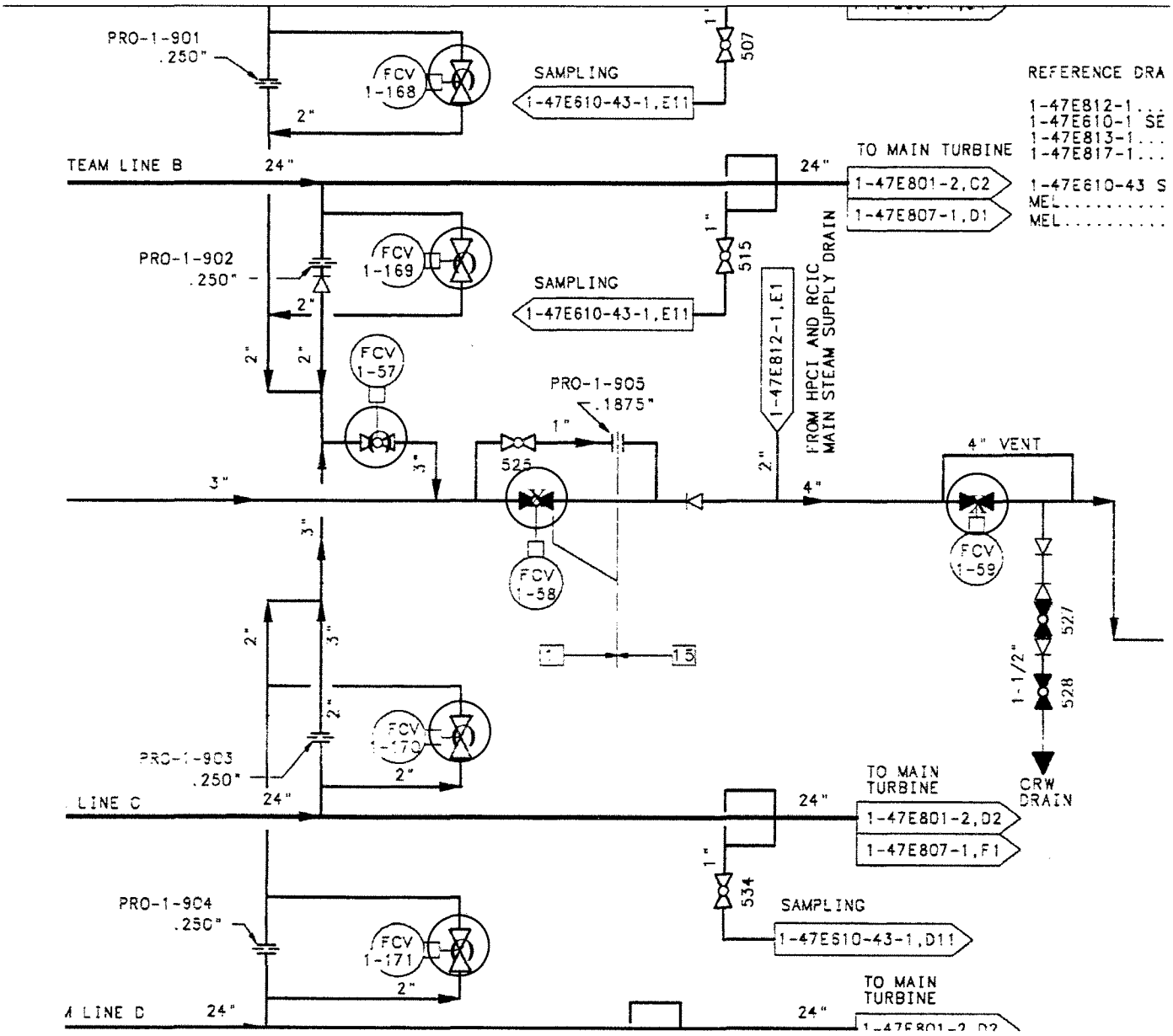
PRO-1-901
.250"
FCV
1-168
2"
SAMPLING
1-47E610-43-1,E11
1"
507
REFERENCE DRA
1-47E812-1...
1-47E610-1 SE
1-47E813-1...
1-47E817-1...
TEAM LINE B
24"
24"
TO MAIN TURBINE
1-47E801-2,C2
1-47E807-1,D1
1-47E610-43 S
MEL.....
MEL.....
PRO-1-902
.250"
FCV
1-169
2"
SAMPLING
1-47E610-43-1,E11
1"
515
1-47E812-1,E1
FROM HPCI AND RCIC
MAIN STEAM SUPPLY DRAIN
2"
2"
FCV
1-57
PRO-1-905
.1875"
1"
525
3"
3"
2"
4"
4" VENT
FCV
1-58
FCV
1-59
3"
2"
3"
2"
1-1/2"
527
528
PRO-1-903
.250"
FCV
1-170
2"
LINE C
24"
24"
TO MAIN
TURBINE
1-47E801-2,D2
1-47E807-1,F1
CRW
DRAIN
1"
534
SAMPLING
1-47E610-43-1,D11
PRO-1-904
.250"
FCV
1-171
2"
LINE D
24"
24"
TO MAIN
TURBINE

DRYWELL RADIATION HIGH 1-RA-90-272	15

(Page 1 of 1)

Sensor/Trip Point:

1-RE-90-272A	100 R/HR
1-RE-90-273A	160 R/HR
1-RE-90-272B 1-RE-90-273B	Alarm setpoint disabled by raising adjustment to full scale value.

Sensor Location:
1-RM-90-272A, Panel 1-9-54
1-RM-90-273A, Panel 1-9-55
1-RM-90-272B, Panel 1-9-54
1-RM-90-273B, Panel 1-9-55

Probable Cause:
A. Noise spikes.
B. Sensor malfunction.
C. High radiation (post accident monitor).

Automatic Action: None

Operator Action:

A. **VERIFY** alarm on 1-RR-90-272A on Panel 1-9-54 and 1-RR-90-273A on Panel 1-9-55. ☐
B. **CHECK** 1-RR-90-256 for rising indication ☐
C. **ATTEMPT** to isolate equipment to stop source. ☐
D. **IF** the alarm is determined to be valid, **THEN**, **PERFORM** the following within 2 hours of alarm:
- **OPEN** UPSTREAM MSL DRAIN TO CONDENSER 1-FCV-001-0058. ☐
- **OPEN** DOWNSTREAM MSL DRAIN TO CONDENSER 1-FCV-001-0059. ☐
- **ENSURE** 1-PCV-001-0147 is Closed by taking STEAM SEAL REGULATOR, 1-HS-1-147 to **CLOSE**. (Panel 1-9-7) ☐
- **CLOSE** MAIN STEAM TO OG PREHEATER 1A ISOL, 1-SHV-001-0741.(SJAE RM B) ☐
- **CLOSE** MAIN STEAM TO OG PREHEATER 1B ISOL, 1-SHV-001-0743.(SJAE RM B) ☐

Continued on Next Page

Examination Outline Cross-reference:	Level	RO
241000 Reactor/Turbine Pressure Regulator	Tier #	2
A1.01 (10CFR 55.41.5)	Group #	2
Ability to predict and/or monitor changes in parameters associated with operating the REACTOR/TURBINE PRESSURE REGULATING SYSTEM controls including:	K/A #	241000A1.01
• Reactor pressure	Importance Rating	3.9

Proposed Question: **# 59**

Unit 2 is at 98% Reactor Power, ascending to rated power following a plant startup, when the following alarm is received:

- REACTOR PRESS HIGH, (2-9-5A, Window 1)

Which ONE of the following completes the statement?

The setpoint for this alarm is __**(1)**__ psig. Attempting diagnostics, you look to EHC. For this power level, normal EHC Pressure Set is set to approximately __**(2)**__ psig.

A. **(1)** 1058
(2) 955

B. **(1)** 1058
(2) 1035

C. **(1)** 1073
(2) 955

D. **(1)** 1073
(2) 1035

Proposed Answer: **A**

Explanation (Optional):

A **CORRECT:** Part 1 correct - REACTOR PRESS HIGH (2-9-5A, Window 1) set point is 1058 psig. Part 2 correct – Per 2-GOI-100-1A, "Unit Startup and Power Operations", the Reactor is pressurized until reaching 955 psig then EHC SETPOINT, 2-PI-47-162 is set and verified at 955 psig.

B INCORRECT: Part 1 is correct as explained above. Part 2 is incorrect – Normal EHC Pressure Setpoint is 955 psig. However, 1035 psig is plausible in that this is the actual expected Reactor Pressure with EHC Pressure Set at 955 psig.

C INCORRECT: Part 1 is incorrect – The alarm setpoint is 1058 psig. The value of 1073 corresponds to the High Reactor Pressure Scram setpoint. Part 2 is correct as explained above.

D INCORRECT: Part 1 and 2 are incorrect as explained above.

Technical Reference(s): 2-GOI-100-1A Rev 139 (Attach if not previously provided)

2-ARP-9-5A Rev 43 (Including version / revision number)

Proposed references to be provided to applicants during examination: NONE

Learning Objective: V.B.1 (As available)

Question Source: Bank # X

Modified Bank # (Note changes or attach parent)

New

Question History: Last NRC Exam Hatch 07 #42

(Optional - Questions validated at the facility since 10/95 will generally undergo less rigorous review by the NRC; failure to provide the information will necessitate a detailed review of every question.)

Question Cognitive Level: Memory or Fundamental Knowledge X

Comprehension or Analysis

10 CFR Part 55 Content: 55.41 X

55.43

Comments:

BFN Unit 2	Unit Startup and Power Operation	2-GOI-100-1A Rev. 0139 Page 99 of 169

5.0 INSTRUCTION STEPS (continued)

[60.2] **DEPRESS** Pressure Setpoint RAISE push-button, 2-HS-47-162B, on Panel 2-9-7, as necessary to maintain EHC SETPOINT, 2-PI-47-162 above Reactor pressure until reaching approximately 955 psig (N/A if a Hot Startup is being performed and a RFP is maintaining level).

(R) _____ _____ _____
Initials Date Time

[61] **VERIFY** EHC SETPOINT, 2-PI-47-162 set at 955 psig on Panel 2-9-7.

(R) _____ _____ _____
Initials Date Time

REACTOR PRESS HIGH 2-PA-3-53
1

(Page 1 of 1)

Sensor/Trip Point:

RFW Control System

2-RLY-003-0053PH 1058 psig

Average of valid Wide Range Pressure signal from RFW Control System. Signals originate from 2-PT-3-54, 3-61 and 3-207.

Sensor Location:
2-RLY-003-0053PH in Panel 2-9-97 (Unit 2 Control Room)
2-PT-3-54 on Panel 2-25-5B (Rx Bldg El 593', R-10-S-LINE)
2-PT-3-61 on Panel 2-25-6B (Rx Bldg El 593', R-12-P-LINE)
2-PT-3-207 on 2-PNLA-925-0426(Rx Bldg El 593',R-10-T-LINE)

Probable Cause:
A. Group 1 isolation.
B. Maximum combined flow limiting.
C. Failed sensor.
D. Failure of Turbine EHC Bypass Control system.

Automatic Action:
None (Reactor Scram at 1073 psig)

Examination Outline Cross-reference:	Level	RO
245000 Main Turbine Gen. / Aux.	Tier #	2
K5.07 (10CFR 55.41.5)	Group #	2
Knowledge of the operational implications of the following concepts as they apply to MAIN TURBINE GENERATOR AND AUXILIARY SYSTEMS:	K/A #	245000K5.07
• Generator operations and limitations	Importance Rating	2.6

Proposed Question: **# 60**

Unit 3 was operating at 100% Reactor Power when the in-service Hydrogen Pressure Regulator failed closed. Generator Hydrogen Pressure has lowered to 45 psig. Other Generator parameters are as follows:

- Generator Load is 1153 MWe
- Generator Reactive Load is 150 MVARs lagging

Which ONE of the following identifies **ALL** of the available options that will place the Unit within the safe area of the Estimated Reactive Capability Curve?

[REFERENCE PROVIDED]

A. Lower MWe **ONLY**.

B. Raise Generator Gas pressure **ONLY**.

C. Raise Generator Gas pressure **OR** Lower MWe.

D. Raise Generator Gas Pressure **OR** Raise MVARs.

Proposed Answer: **C**

Explanation (Optional):

A INCORRECT: Based on condition the student should plot the current location on the graph outside the safe area. Must be inside the curve to be in the safe area. In addition to lowering MWe, raising Generator Gas Pressure would also place the Unit in the safe area. Therefore, this answer is incorrect.

B INCORRECT: In addition to raising Generator Gas Pressure, lowering MWe would also place the Unit in the safe area. Therefore, this answer is incorrect.

C **CORRECT:** Either raising Generator Gas pressure or lower MWe would place the unit in the safe area of the Estimated Capability Curve

D INCORRECT: Raising or lowering MVARs would still be outside the curve.

Technical Reference(s): OPL171.134 Rev 0 (Attach if not previously provided)

3-OI-47 Rev 0077 (Including version / revision number)

Proposed references to be provided to applicants during examination: **Estimated Reactive Capability Curve, 3-OI-47 Illustration 6**

Learning Objective: _____ (As available)

Question Source: Bank # X

Modified Bank # (Note changes or attach parent)

New

Question History: Last NRC Exam Brunswick 08 #65

(Optional - Questions validated at the facility since 10/95 will generally undergo less rigorous review by the NRC; failure to provide the information will necessitate a detailed review of every question.)

Question Cognitive Level: Memory or Fundamental Knowledge

Comprehension or Analysis X

10 CFR Part 55 Content: 55.41 X

55.43

Comments:

BFN Unit 3	Turbine-Generator System	3-OI-47 Rev. 0077 Page 215 of 224

Illustration 6
(Page 1 of 1)
Generator Kilovar Limitations (Capability Curve)

NOTES

1) A 200 Mvar maximum outgoing (lagging) limit applies to all three units for both 500kV and 161kV offsite power source qualification (based on unit Mvar capability limits provided by BFN and used in grid studies). 0-GOI-300-4
2) When operated in automatic, the generator voltage regulator has an electronic limit which limits incoming reactive, at full load, to approximately 150 MVAR. When operated in manual, there is an administrative limit of 150 MVAR.
3) Operation with leading MVARs (incoming) > 150 MVARs, is prohibited unless calibration or testing is being performed. Under no circumstances should the capability curve be exceeded.

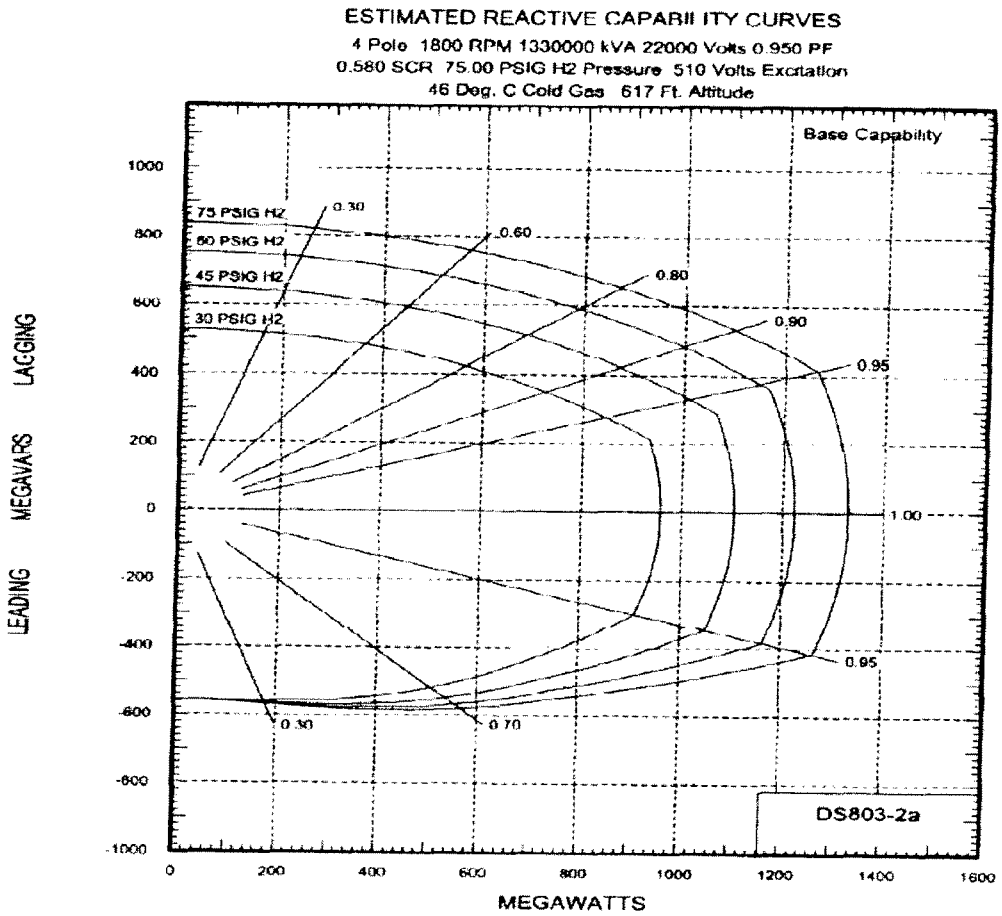

Brunswick 2008

65. A grid disturbance occurs with the following Unit Two plant parameters:

Generator Load	980 MWe
Generator Reactive Load	160 MVARs, out
Generator Gas Pressure	50 psig

(Reference provided)

Which one of the following identifies all of the available options that will place the Unit within the Estimated Capability Curve?

A. Raise Gas Pressure or lower MWe.

B. Raise Gas Pressure or raise MVARs.

C. Raise Gas Pressure only.

D. Lower MWe only.

REFERENCE:
1OP-27 Figure 1 (provided to the examinee)

EXPLANATION:
Based on the conditions the student should plot the current location on the graph. Plot MWe along the bottom and MVARs up the side. Where these two points intersect, based on 50 psig gas pressure line is outside of the safe area. (Must be inside the curve to be safe) Lowering MWe or raising gas pressure are the only options. Lowering or raising MVARs would still be outside the curve.

CHOICE "A" Correct Answer

CHOICE "B" See explanation

CHOICE "C" See explanation

CHOICE "D" See explanation

700000 Generator Voltage and Electric Grid Disturbances

AA2. Ability to determine and/or interpret the following as they apply to GENERATOR VOLTAGE AND ELECTRIC GRID DISTURBANCES:
(CFR 41.5 and 43.5 / 45.5, 45.7, and 45.8)

AA2.04 VARs outside capability curve 3.6 3/ 6

SOURCE: New

LESSON PLAN/OBJECTIVE:
CLS-LP-27, Obj. 9. Given the Generator estimated capability curves, hydrogen pressure and either MVARS, MW, or power factor, determine the limit for MW and MVARS

COG LEVEL: High

Examination Outline Cross-reference:

256000 Reactor Condensate

G2.1.30 (10CFR 55.41.7)

Ability to locate and operate components, including local controls.

Level	RO
Tier #	2
Group #	2
K/A #	256000G2.1.30
Importance Rating	4.4

Proposed Question: **# 61**

Unit 2 was operating at 100% Reactor Power, when an event occurred, causing entry into 2-EOI-1, "RPV Control." The Unit Supervisor has directed the performance of 2-EOI APPENDIX-6A, "Injection Subsystems Lineup Condensate."

Which ONE of the following set of conditions describes a correct system alignment to support APPENDIX-6A?

Verify that the HP HTR 2A1 LONG CYCLE TO CNDR VALVE, 2-FCV-3-71 is __**(1)**__.

Verify that the RFP 2A DISCHARGE VALVE, 2-FCV-3-19 is __**(2)**__.

Verify that the DRAIN COOLER 2A5 CNDR INLET ISOL VALVE, 2-FCV-2-72 is __**(3)**__.

	__(1)__	__(2)__	__(3)__
A.	CLOSED	OPEN	CLOSED
B.	OPEN	OPEN	OPEN
C.	OPEN	CLOSED	OPEN
D.	CLOSED	CLOSED	OPEN

Proposed Answer: **D**

Explanation (Optional):

A INCORRECT: part 1 = correct, Step 1 has the feedwater heater return valves verified CLOSED. part 2 = incorrect, step 2, RFP discharge valves are required to be CLOSED. part 3 = incorrect, step 3, requires valves to be OPEN.

B INCORRECT: part 1 = incorrect, Step 1 has the feedwater heater return valves verified CLOSED. part 2 = incorrect, step 2, RFP discharge valves are required to be CLOSED. part 3 = correct, step 3, requires valves to be OPEN.

C INCORRECT: part 1 = incorrect, Step 1 has the feedwater heater return valves verified CLOSED. part 2 = correct, step 2, RFP discharge valves are required to be CLOSED. part 3 = correct, step 3, requires valves to be OPEN.

D **CORRECT:** part 1 = correct, Step 1 has the feedwater heater return valves verified CLOSED. part 2 = correct, step 2, RFP discharge valves are required to be CLOSED. part 3 = correct, step 3, requires valves to be OPEN.

Technical Reference(s): 2-EOI APPENDIX-6A Rev 4 (Attach if not previously provided)

OPL171.011 Rev 12 (Including version / revision number)

Proposed references to be provided to applicants during examination: NONE

Learning Objective: V.B.10 (As available)

Question Source: Bank # ____ Modified Bank # ____ (Note changes or attach parent)

New X

Question History: Last NRC Exam ____

(Optional - Questions validated at the facility since 10/95 will generally undergo less rigorous review by the NRC; failure to provide the information will necessitate a detailed review of every question.)

Question Cognitive Level: Memory or Fundamental Knowledge X

Comprehension or Analysis

10 CFR Part 55 Content: 55.41 X

55.43

Comments:

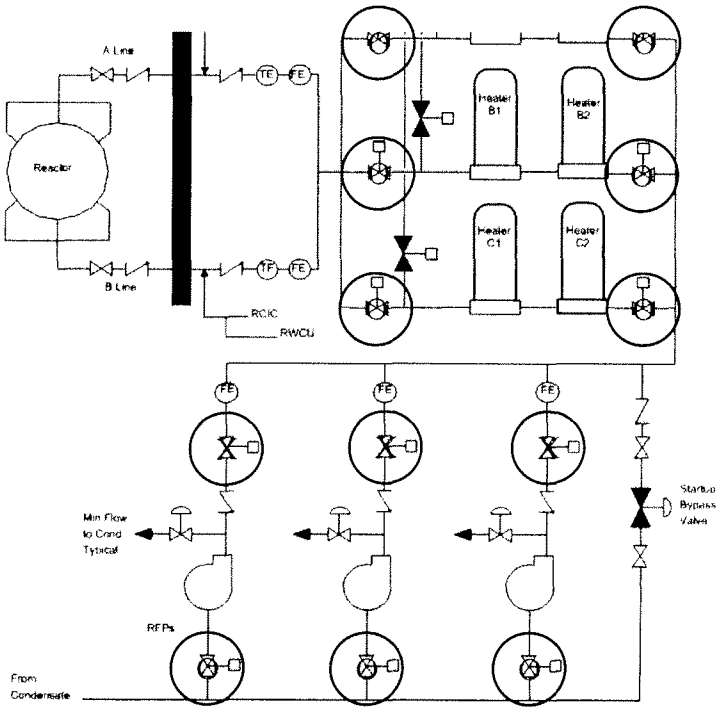
A Line
TE
FE
Reactor
B Line
TE
FE
RCIC
RWCU
Heater B1
Heater B2
Heater C1
Heater C2
FE
FE
FE
Min Flow to Cond Typical
RFPs
From Condensate
Startup Bypass Valve

2. **VERIFY CLOSED** the following RFP discharge valves:

- 2-FCV-3-19, RFP 2A DISCHARGE VALVE ____
- 2-FCV-3-12, RFP 2B DISCHARGE VALVE ____
- 2-FCV-3-5, RFP 2C DISCHARGE VALVE. ____

3. **VERIFY OPEN** the following drain cooler inlet valves:

- 2-FCV-2-72, DRAIN COOLER 2A5 CNDS INLET ISOL VLV ____
- 2-FCV-2-84, DRAIN COOLER 2B5 CNDS INLET ISOL VLV ____
- 2-FCV-2-96, DRAIN COOLER 2C5 CNDS INLET ISOL VLV. ____

4. **VERIFY OPEN** the following heater outlet valves:

- 2-FCV-2-124, LP HEATER 2A3 CNDS OUTL ISOL VLV ____
- 2-FCV-2-125, LP HEATER 2B3 CNDS OUTL ISOL VLV ____
- 2-FCV-2-126, LP HEATER 2C3 CNDS OUTL ISOL VLV. ____

Examination Outline Cross-reference:

271000 Offgas

A4.06 (10CFR 55.41.7)

Ability to manually operate and/or monitor in the control room:

- System indicating lights and alarms

Level	RO
Tier #	2
Group #	2
K/A #	271000A4.06
Importance Rating	3.3

Proposed Question: **# 62**

Unit 2 is operating at 100% Reactor Power with the SJAE 2A in service.

A tagging error results in the closure of the Recombiner Preheater Steam Supply Valve followed by the receipt of alarm:

- RECOMBINER INLET TEMPERATURE LOW, (2-9-53, Window 1)

Which ONE of the following describes the affect this condition will have on Main Condenser vacuum **AND** Hydrogen concentration downstream of the Recombiner?

Initially, Main Condenser vacuum will __**(1)**__ **AND** Hydrogen concentration will__**(2)**__.

A. **(1)** degrade
(2) increase

B. **(1)** degrade
(2) decrease

C. **(1)** remain steady
(2) increase

D. **(1)** remain steady
(2) decrease

Proposed Answer: **C**

Explanation (Optional):

A INCORRECT: Part 1 is incorrect. Closure of the Recombiner Preheater Steam Supply Valve will have no affect on the operation of the SJAEs and not effect on condenser vacuum. Part 2 is correct. The loss of the Recombiner Preheater steam source and resultant low recombiner temperature will cause recombiner efficiency to drop, causing downstream hydrogen concentration to rise.

B INCORRECT: Part 1 is incorrect. Closure of the Recombiner Preheater Steam Supply Valve will have no affect on the operation of the SJAEs and not effect on condenser vacuum. Part 2 is incorrect. The loss of the Recombiner Preheater steam source and resultant low recombiner temperature will cause recombiner efficiency to drop, causing downstream hydrogen concentration to rise.

C **CORRECT:** Part 1 is correct. Closure of the Recombiner Preheater Steam Supply Valve will have no affect on the operation of the SJAEs and no effect on condenser vacuum. Part 2 is correct. The loss of the Recombiner Preheater steam source and resultant low recombiner temperature will cause recombiner efficiency to drop, causing downstream hydrogen concentration to rise. RECOMBINER INLET TEMPERATURE LOW, (2-9-53, Window 1) alarms at 275° F.

D INCORRECT: Part 1 is correct. Closure of the Recombiner Preheater Steam Supply Valve will have no affect on the operation of the SJAEs and not effect on condenser vacuum. Part 2 is incorrect. The loss of the Recombiner Preheater steam source and resultant low recombiner temperature will cause recombiner efficiency to drop, causing downstream hydrogen concentration to rise.

Technical Reference(s): 2-ARP-9-53 Rev 34 (Attach if not previously provided)

OLP171.030 Rev 16 (Including version / revision number)

Proposed references to be provided to applicants during examination: NONE

Learning Objective: _____ (As available)

Question Source: Bank # X

Modified Bank # _____ (Note changes or attach parent)

New _____

Question History: Last NRC Exam Brunswick 08 #34

(Optional - Questions validated at the facility since 10/95 will generally undergo less rigorous review by the NRC; failure to provide the information will necessitate a detailed review of every question.)

Question Cognitive Level: Memory or Fundamental Knowledge

Comprehension or Analysis X

10 CFR Part 55 Content: 55.41 X

55.43

Comments:

OFF-GAS RECOMBINER A INLET TEMP LOW 2-TA-66-75A	1

(Page 1 of 1)

Sensor/Trip Point:

2-TS-66-75A 275°F

Sensor Location: Panel 2-9-53
Elevation 617
Main Control Rm

Probable Cause:
A. Off-gas preheater malfunction.
B. Loss of supply steam.
C. Cal-rod heater failure.
D. Sensor malfunction.

Automatic Action: None

Operator Action:

A. **CHECK** recombiner inlet temperature on 2-TI-66-75A, Panel 2-9-53. ☐

B. **IF** recombiner is on standby, **THEN**
1. **VERIFY** cal-rod heaters, 2-HS-66-76, in the ON position with power supply on. ☐
2. **VERIFY** adequate steam pressure to preheater (nuclear or auxiliary boiler steam). ☐

C. **IF** recombiner is in service, **THEN**
1. **VERIFY** recombiner preheater has adequate steam pressure. ☐

CAUTION
Failure to maintain recombiner inlet temperature above 240°F can cause recombiner deactivation.

2. **DISPATCH** personnel to check 2-TC-66-76 setpoint at about 350°F on Panel 25-95 elevation 604, Turbine Building. ☐
3. **CHECK** Off-Gas System hydrogen concentration.
4. **IF** H_2 concentration is above 1%, **THEN** **REFER TO** 2-AOI-66. ☐

References: 2-45E620-15 2-47E610-66-3

Examination Outline Cross-reference:	Level	RO
288000 Plant Ventilation	Tier #	2
A2.05 (10CFR 55.41.5)	Group #	2
Ability to (a) predict the impacts of the following on the PLANT VENTILATION SYSTEMS; and (b) based on those predictions, use procedures to correct, control, or mitigate the consequences of those abnormal conditions or operations:	K/A #	288000A2.05
• Extreme outside weather conditions: Plant-Specific	Importance Rating	2.6

Proposed Question: **# 63**

ALL units are operating at 100% Reactor Power. Weather predictions indicate that Outside Ambient Air Temperature will dip to around 20 °F for an overnight low, **AND** is **NOT** expected to rise above 32 °F for the next 48 hours.

Which ONE of the following completes the statement?

For the above weather prediction, the correct action is to verify that __**(1)**__. This is due to the fact that extreme air temperatures may cause freezing of __**(2)**__.

A. **(1)** the Hot Water Generator is in service to heat the Control Bay.
(2) temperature sensitive components.

B. **(1)** each unit has its respective Hot Water Generator in service to heat the Diesel Generator Buildings.
(2) the heating coils.

C. **(1)** at least TWO Auxiliary Boilers are in operation to supply hot water to the Diesel Generator Buildings.
(2) temperature sensitive components.

D. **(1)** each unit has its respective Turbine Building **AND** Reactor Building Air Wash Systems in operation to assist in tempering the incoming air.
(2) the intake coils.

Proposed Answer: **A**

Explanation (Optional):

A **CORRECT:** Part 1 = correct, the Hot Water Generator supplies the Control Bay. Part 2 = correct, CB components are the concern.

B INCORRECT: Part 1 = incorrect, there is only 1 Hot Water Generator for all 3 units + it supplies the Control Bay not DG Buildings. Part 2 = incorrect, temperature sensitive components are the challenge.

C INCORRECT: Part 1 = incorrect, Only 1 Boiler is required to support building heating and does not supply the Diesel Generator Buildings, only the Control Bay. Part 2 = correct as explained above.

D INCORRECT: Part 1 = incorrect, the Air Wash System is required to be secured during cold weather, is used to cool not heat. Part 2 = correct, the intake coils are required to be in a freeze protection alignment per 0-GOI-200-1.

Technical Reference(s): 0-GOI-200-1 Rev 60 (Attach if not previously provided)

OPL171.067 Rev 16 (Including version / revision number)

Proposed references to be provided to applicants during examination: NONE

Learning Objective: _____ (As available)

Question Source: Bank # _____

Modified Bank # _____ (Note changes or attach parent)

New X

Question History: Last NRC Exam _____

(Optional - Questions validated at the facility since 10/95 will generally undergo less rigorous review by the NRC; failure to provide the information will necessitate a detailed review of every question.)

Question Cognitive Level: Memory or Fundamental Knowledge

Comprehension or Analysis X

10 CFR Part 55 Content: 55.41 X

55.43

Comments:

Q	Methods of Heating the Plant		Obj. V B.1
	1	Reactor building heating is part of a common system that circulates heated water provided by the building heat exchangers through the heating coils of space heaters located throughout the reactor buildings. The hot water is circulated through the heating coils by secondary pumps.	Obj. V C.1 Obj. V C.6 Obj. V D.6
	2	The reactor building intake plenum has outside air entering through coils that can be supplied by hot water from the building heat exchangers when they are in service	
	3	Turbine building heating The outside air that enters the building is filtered and passes across coils that in winter have hot water circulated through them by secondary pumps from the building heat exchangers. Additionally, space heaters with heating coils also supply heating	
	4	Control Bay heating Hot water generator, located in Unit 1 Mechanical Equipment Room - 617', contains immersion type heater elements which provide 180°F water to a storage tank. Two 100% capacity hot water pumps to circulate hot water to air handling unit heating coils and to reheat coils mounted in branch air supply ducts. The Hot water generator is common to all units	OI-31
	5	Radioactive waste building is heated by tempering the building air supply with hot water coils from building heating system	
	6	Diesel generator building is heated with electrical resistance heaters	

BFN Unit 0	Freeze Protection Inspection	0-GOI-200-1 Rev. 0060 Page 15 of 80

5.0 INSTRUCTIONS STEPS (continued)

NOTES

1) Attachment 2 is performed once annually the first time temperature lowers below the heater initiation setpoints (approximately 35°F). If the attachment is NOT completed before temperatures rise above 35°F, keep the attachment open and continue when temperatures fall back below 35°F. Continue to do this until the attachment is completed.
2) It could take an undetermined amount of time to obtain all of the checks, depending on the duration of temperatures below approximately 35°F. Therefore, any identified discrepancies found are required to be evaluated when placed on hold and initiation of a WO coded "FZ" for the focus area is required.
3) Once completed, Attachment 2 will remain with the master copy.
4) At the Shift Managers discretion, Attachment 2 may be performed after maintenance or power outages, or weekly during unusually cold weather. These subsequent performance checks are NOT required to be kept, but should be noted in the remarks section of this procedure and logged in the Narrative Log.

[4] **WHEN** outside ambient temperature lowers below approximately 35°F, **THEN**

COMMENCE Attachment 2, Freeze Protection Operational Checklist (required once annually) **AND** enter into NOMS.

Attachment 2
(Page 3 of 11)

Freeze Protection Operational Checklist

[2] **CHECK** the CHILLER PIPING HEAT TRACE TROUBLE alarm for Control Bay HVAC on Panel 0-LPNL-925-0165C RESET. _____

[2.1] **IF** < 32°F, **THEN**

CHECK hot water generator line-up and **VENT** IAW 0-OI-31 using HW OUTLET VENT U1 PREHEAT, 1-31-571 (Mech Equip Room 3C). _____

13.0 UNIT 1 & 2 TURBINE BUILDING AUXILIARY BOILERS

NOTE

Operability of all Auxiliary Boilers is NOT required. Only one boiler is required for Building Heat. Any Auxiliary Boiler that is NOT operational may be marked as N/A. At least one of the Auxiliary Boilers is required to be fired and operational for building heat checks.

[1] **CHECK** at least one Auxiliary Boiler is operable that may be used for Building Heat. **REFER TO** 0-OI-12. **CIRCLE** the Auxiliary Boiler that is checked operable.

- Auxiliary Boiler A _____
- Auxiliary Boiler B _____
- Auxiliary Boiler C _____

[3] **PERFORM** the following at the Unit 3 Reactor And Refuel Zone Supply Fan Room:

[3.1] **VERIFY** Refuel Zone Ventilation Air Wash Pumps shutdown per 3-OI-30A. _____

[3.2] **VERIFY** Reactor Zone Ventilation Air Wash Pumps shutdown per 3-OI-30B. _____

[3.3] **ALIGN** Unit 3 Reactor and Refuel Zone Air Wash System for Freeze Protection using 0-OI-2C. _____

[4] **PERFORM** the following at the Unit 2 Reactor And Refuel Zone Supply Fan Room:

[4.1] **VERIFY** Refuel Zone Ventilation Air Wash Pumps shutdown per 2-OI-30A. _____

[4.2] **VERIFY** Reactor Zone Ventilation Air Wash Pumps shutdown per 2-OI-30B. _____

[4.3] **ALIGN** Unit 2 Reactor and Refuel Zone Air Wash System for Freeze Protection using 0-OI-2C. _____

[5] **PERFORM** the following at the Unit 1 Reactor And Refuel Zone Supply Fan Room:

[5.1] **VERIFY** Refuel Zone Ventilation Air Wash Pumps shutdown per 1-OI-30A. _____

[5.2] **VERIFY** Reactor Zone Ventilation Air Wash Pumps shutdown per 1-OI-30B. _____

[5.3] **ALIGN** Unit 1 Reactor and Refuel Zone Air Wash System for Freeze Protection using 0-OI-2C. _____

Examination Outline Cross-reference:

290001 Secondary CTMT

K3.01 (10CFR 55.41.7)

Knowledge of the effect that a loss or malfunction of the SECONDARY CONTAINMENT will have on the following:

- Off-site radioactive release rates

Level	RO
Tier #	2
Group #	2
K/A #	290001K3.01
Importance Rating	4.0

Proposed Question: **# 64**

Given the following plant conditions:

- Unit 2 is at 100% power
- A rupture of the Spent Fuel Pool has resulted in lowering level
- **ALL** Reactor **AND** Refuel Zone radiation monitors trip on high radiation
- **NO** Standby Gas Treatment (SGT) train can be started
- Refuel Zone Pressure is (+) 0.02 inches of water
- Reactor Zone Pressure is (+) 0.02 inches of water

Which ONE of the following completes the statement?

Based on the conditions identified, a (an) _____ radiation release is in progress.

A. monitored, ground

B. unmonitored, ground

C. monitored, elevated

D. unmonitored, elevated

Proposed Answer: **B**

Explanation (Optional):

A INCORRECT: Part 1 incorrect – With the normal ventilation isolated due to high radiation levels and all Standby Gas Treatment Trains failed, the release is unmonitored. Plausible in that candidate must recognize the isolation based on rad levels. Part 2 correct – the positive differential pressure results in a ground-level release.

B **CORRECT:** Part 1 correct – With the normal ventilation isolated due to high radiation levels and all Standby Gas Treatment Trains failed, the release is unmonitored. Part 2 correct – the positive differential pressure results in a ground-level release.

C INCORRECT: Part 1is incorrect as explained above. Part 2 incorrect – the positive differential pressure results in a ground-level release. This is plausible in that candidate must recognize the positive differential pressure indicates that any Secondary CTMT leakage is not assured to be into the building and results in a ground-level release.

D INCORRECT: Part 1 is correct as explained above. Part 2 is incorrect as explained above.

Technical Reference(s): OPL171.016 Rev 17, OPL171.067 Rev 16 (Attach if not previously provided)

OPL171.018 Rev 10 (Including version / revision number)

Proposed references to be provided to applicants during examination: NONE

Learning Objective: V.B.12 (As available)

Question Source:

Bank #	
Modified Bank #	X
New	

(Note changes or attach parent)

Question History: Last NRC Exam BFN 0707 #64

(Optional - Questions validated at the facility since 10/95 will generally undergo less rigorous review by the NRC; failure to provide the information will necessitate a detailed review of every question.)

Question Cognitive Level: Memory or Fundamental Knowledge

Comprehension or Analysis X

10 CFR Part 55 Content: 55.41 X

55.43

Comments:

D. Secondary Containment Integrity

1. Normal ventilation flow path, ΔP control, and isolation capability ensure secondary containment integrity during normal operation. Loss of the normal HVAC system under isolation (PCIS) conditions does not affect secondary containment integrity if SGT auto starts and has a suction path to maintain pressure at -0.25 inches H_2O inside the reactor building. This ensures leakage is into the building, and releases are elevated (stack) and monitored. However if secondary containment integrity is lost, leakage may be at ground levels, and site boundary doses may be higher than calculated in the accident analysis.

Obj. V.B.2
Obj. V.C.8/V.B.4
Obj.V.C.19
T.S. 3.6.4.1, 3.6.4.2

EFFECTIVE COMMUNICATION

Deleted:

G Secondary Containment

1. General Description

a. Purpose of Secondary Containment is to minimize the ground-level release of airborne radioactive materials and provide for the controlled and elevated release of the building atmosphere under accident conditions.

TP-4
Obj. V.D.2.b, Obj. V.E.2.b

b. The reactor building and part of the ventilation systems, including the reactor zone, refueling zone, SGTS, and CREV makes up the secondary containment.

c. Constructed of reinforced concrete, it encloses the primary containment.

d. The reactor building (3 units & RFF) is maintained at a slight negative internal pressure to ensure in-leakage

(1) Normal operation - ventilation system

(2) Accident conditions - SGTS

-CREV is actually emerg-vent. For control room.
-dP controllers that adjust supply fan inlet vanes to limit air flow into fan. Located in Rx bldg. U-1, 2 or 3 @ 639 elev
-(SLC), RF floor U-1, 2 or 3 @ 664 elev. N. wall

2. Design specifications

a. In leakage will be < 100% of building volume per day with a negative internal pressure of .25 inches of water.

b. Seismic category I structure.

b. Relief panels

(1) Excessive pressure differentials due to steam line ruptures and tornadoes are controlled or prevented by venting to atmosphere through relief panels.

(2) Three sets of relief panels and a flow limiter prevent overpressurization of the secondary containment. TP-4

(a) Main steam relief panels Obj. V.B.15 Obj. V.C.7

(b) Zone relief panels (most are removed) Obj. V.D.12 Obj. V.E.5

(c) Exterior siding panels (RFF perimeter)

(d) HPCI flow limiter (300% max flow)

(3) Main steam ruptures are vented to turbine building through steam relief panels (In steam vault & Turb. Floor)

(4) Other steam ruptures are vented to the refueling floor through what use to be zone relief panels. Most of these relief panels are now removed, allowing no true separation between the 3 units' Rx Bldgs. Some panel areas still exist, but only as a partition function.

(5) Exterior siding panels vent the refueling floor to atmosphere.

INSTRUCTOR NOTES

(6) Panels are held to reactor building super-structure by notched bolts designed to break at 50 lbs/ft^2 (5" of water). TP-22

INSTRUCTOR NOTES

X Lesson Body

A. General Description

1. Purpose of the SGT — Obj. V.B.1, Obj. V.D.1, Obj. V.E.1

a. To maintain a small negative pressure (-.25" H_2O VAC with an in-leakage flow of 12000 cfm) in the Reactor Building under isolation conditions to prevent ground-level release of airborne activity

b. To treat the effluent from the containment buildings before discharging it through the plant stack, in order to minimize release of radioactive material from the containment to the environs — HPCI Rupture Disk also vents to SGT

c. Used for Primary Containment purging if the purge system is out of service.

d. Used to vent P.C. with CAD for post LOCA venting operations.

BFN 0707 #64

Given the following plant conditions:

- Unit 2 is at 100% power.
- During the backwash of a Reactor Water Cleanup (RWCU) Demineralizer, the Backwash Receiving Tank ruptured.
- The RWCU system has been isolated.
- Secondary Containment conditions are as follows:
  - ALL Reactor and Refuel Zone radiation monitors trip on high radiation.
  - NO Standby Gas Treatment (SGT) train can be started.

Refuel zone pressure:	(-) 0.12 inches of water
Reactor zone pressure:	(+) 0.02 inches of water

- AREA RADIATION LEVELS

RB EL 565 W, 565 E, 565 NE:	250 mr/hr
RB EL 593	upscale
RB EL 621	upscale

Which ONE of the following describes the required action and the type of radioactive release in progress?

REFERENCE PROVIDED

A. Initiate a shutdown per 2-GOI-100-12A, "Unit Shutdown." An Elevated radiation release is in progress.

B. Initiate a shutdown per 2-GOI-100-12A, "Unit Shutdown." A Ground-level radiation release is in progress.

C. Scram the reactor and Emergency Depressurize the RPV. An Elevated radiation release is in progress.

D. Scram the reactor and Emergency Depressurize the RPV. A Ground-level radiation release is in progress.

Examination Outline Cross-reference:

290002 Reactor Vessel Internals

K1.04 (10CFR 55.41.5)

Knowledge of the physical connections and/or cause-effect relationships between REACTOR VESSEL INTERNALS and the following:

- HPCI: Plant-Specific

Level	RO
Tier #	2
Group #	2
K/A #	290002K1.04
Importance Rating	3.4

Proposed Question: **# 65**

Which ONE of the following completes the statement?

According to the Updated Facility Safety Analysis Report (UFSAR), the "Inadvertent HPCI Start" (from full-power operations) is considered for cycle-specific reload licensing analysis because it is grouped under "Events Resulting in a / an __**(1)**__" **AND** will challenge __**(2)**__.

A. **(1)** Excess of Coolant Inventory,
(2) Average Planar Linear Heat Generation Rate (APLHGR) limits for fuel.

B. **(1)** Reactor Vessel Water Temperature Decrease,
(2) Average Planar Linear Heat Generation Rate (APLHGR) limits for fuel.

C. **(1)** Excess of Coolant Inventory,
(2) Minimum Critical Power Ratio (MCPR) limits for fuel bundles in the reactor.

D. **(1)** Reactor Vessel Water Temperature Decrease,
(2) Minimum Critical Power Ratio (MCPR) limits for fuel bundles in the reactor.

Proposed Answer: **D**

Explanation (Optional):

A INCORRECT: Although inadvertent HPCI injection will cause an excess of coolant inventory (until such time as Feedwater Level Control responds), it is **NOT** grouped under this category in the UFSAR. Additionally and from a fundamentals standpoint, APLHGR limits are for Accidents and **NOT** Transients. The stem discusses a transient category condition versus a Design Basis Accident.

B INCORRECT: The first part is correct. This is the appropriate category grouping and evaluated challenge for the Inadvertent HPCI Initiation – a potentially limiting transient for any fuel cycle. However, the second part is incorrect. Additionally and from a fundamentals standpoint, APLHGR limits are for Accidents and **NOT** Transients. The stem discusses a transient category condition versus a Design Basis Accident.

C INCORRECT: The first part is incorrect. Although inadvertent HPCI injection will cause an excess of coolant inventory (until such time as Feedwater Level Control responds), it is **NOT** grouped under this category in the UFSAR. The second part is correct as explained in D.

D **CORRECT**: (see attached UFSAR excerpt) This is the appropriate category grouping and evaluated challenge for the Inadvertent HPCI Initiation – a potentially limiting transient for any fuel cycle.

Technical Reference(s): UFSAR, Chapter 14, Section 5 (Attach if not previously provided)

(Including version / revision number)

Proposed references to be provided to applicants during examination: NONE

Learning Objective: _____ (As available)

Question Source:

Bank #	
Modified Bank #	
New	X

(Note changes or attach parent)

Question History:

Last NRC Exam	

(Optional - Questions validated at the facility since 10/95 will generally undergo less rigorous review by the NRC; failure to provide the information will necessitate a detailed review of every question.)

Question Cognitive Level: Memory or Fundamental Knowledge X

Comprehension or Analysis

10 CFR Part 55 Content: 55.41 X

55.43

Comments:

(UFSAR, Chapter 14 excerpts to follow:)

14.5.1.1 Transient Events Classification

The transient analyses that have been analyzed in this document are classified into seven categories of events. These seven categories and the transient events which they include are:

A) Events Resulting in a Nuclear System Pressure Increase:
1. Generator Load Reject
2. Loss of Condenser Vacuum
3. Turbine Trip
4. Turbine Bypass Valve Malfunction
5. Main Steam Isolation Valve Closure
6. Pressure Regulator Downscale Failure

B) Events Resulting in a Reactor Vessel Water Temperature Decrease:
1. Loss of a Feedwater Heater
2. Shutdown Cooling (Residual Heat Removal System) Malfunction-Decreasing Temperature
3. Inadvertent Pump Start

C) Events Resulting in a Positive Reactivity Insertion:
1. Continuous Control Rod Withdrawal During Power Range Operation
2. Continuous Rod Withdrawal During Reactor Startup
3. Control Rod Removal Error During Refueling
4. Fuel Assembly Insertion Error During Refueling

D) Events Resulting in a Reactor Vessel Coolant Inventory Decrease:
1. Pressure Regulator Failure Open
2. Inadvertent Opening of a Main Steam Relief Valve
3. Loss of Feedwater Flow
4. Loss of Auxiliary Power

E) Events Resulting in a Core Coolant Flow Decrease:
1. Recirculation Flow Control Failure - Decreasing Flow
2. Trip of One Recirculation Pump
3. Trip of Two Recirculation Pumps
4. Recirculation Pump Seizure

F) Events Resulting in a Core Coolant Flow Increase:
1. Recirculation Flow Controller Failure - Increasing Flow
2. Startup of Idle Recirculation Pump

G) Events Resulting in Excess of Coolant Inventory:
1. Feedwater Control Failure - Maximum demand

Reload Analysis Scope:

The bounding transients are re-analyzed for each fuel reload and subsequent operating cycle to determine which is most limiting. The results of these specific analyses may change with subsequent core reloads. These results can be found in the appropriate reload licensing document. Events for which a cycle-specific reload analysis are performed are the following:

a. Generator Load Reject (TCV Fast Closure) with Turbine Bypass Valve Failure (LRNBP)
b. Turbine Bypass Valve Failure Following Turbine Trip, High Power (TTNBP)
c. Feedwater Controller Failure Maximum Demand (FWCF)
d. LFWH or Inadvertent Pump Start
e. Continuous Rod Withdrawal During Power Range Operation (RWE)

If the thermal limits that result from any of the above events are clearly bounded by another event then that event is not analyzed.

14.5-5

14.5.3.3 Inadvertent Pump Start

14.5.3.3.1 Transient Description

Several systems are available for providing high pressure supplies of cold water to the vessel for normal or emergency functions. The control rod drive system and the makeup water system, normally in operation, can be postulated to fail in the high flow direction introducing the possibility of increased power due to higher core inlet subcooling. The same type of transient would be produced by inadvertent startup of either the reactor core isolation cooling (RCIC) or the high pressure core injection (HPCI) System. In all of these cases, the normal feedwater flow would be correspondingly reduced by the water level controls. A portion of the feedwater flow (at rated power condition) is replaced with a colder HPCI flow, and the net result is a mixed feedwater flow at a reduced temperature.

Since a single failure can only initiate one of the cold water systems, the system with the highest flow rate is usually analyzed. The severity of the resulting transient

is highest for the largest of these abnormal events; for BFN, this is the inadvertent startup of the large, 5000 gpm, HPCI System.

This transient is evaluated to determine the MCPR response to a decrease in feedwater temperature due to the inadvertent startup of the HPCI system. This event is qualitatively reviewed as part of the reload licensing analysis to verify its non-limiting trend versus the cycle specific operating limits.

Since the startup of the steam-turbine driven pump takes approximately 25 seconds, the transient that occurs is very similar to the loss of feedwater heater transient described above. As in that case, the most threatening transient would occur where minimum initial fuel thermal margins exist (maximum power within reactor Operating State F).

Examination Outline Cross-reference:

G2.1.39 (10CFR 55.41.10)
Knowledge of conservative decision making practices.

Level	RO
Tier #	3
Group #	
K/A #	G2.1.39
Importance Rating	3.6

Proposed Question: **# 66**

The following conditions exist on Unit 3:

- 3-GOI-100-1A, "Unit Startup," is in progress
- Single notch withdrawal of control rods is required

A Reactor period of 50 seconds is observed following a notch withdrawal of rod 30-31.

Which ONE of the following describes the correct action, if any, to take based on the above conditions?

A. Insert control rods until the reactor is Subcritical.

B. Shutdown the reactor until a thorough assessment has been performed.

C. Reinsert the last control rod pulled to achieve a stable period of greater than 60 seconds.

D. Monitor conditions, allowing power to decay to greater than 100 seconds before proceeding.

Proposed Answer: **C**

Explanation (Optional):

A INCORRECT: 3-GOI-100-1A step [25.2]. Required if < 30 second period is observed.

B INCORRECT: 3-GOI-100-1A step [25.3]. Required if < 5 second period is observed.

C **CORRECT:** 3-GOI-100-1A step [25.1]. Required if < 60 second period is observed.

D INCORRECT: 3-GOI-100-1A step [25.1]. Required if < 60 second period is observed.

Technical Reference(s): 3-GOI-100-1A Rev 82 (Attach if not previously provided)

OPL171.059 Rev 11 (Including version / revision number)

Proposed references to be provided to applicants during examination: NONE

Learning Objective: V.B.5 (As available)

Question Source:

Bank #	
Modified Bank #	
New	X
Last NRC Exam	

(Note changes or attach parent)

Question History:

(Optional - Questions validated at the facility since 10/95 will generally undergo less rigorous review by the NRC; failure to provide the information will necessitate a detailed review of every question.)

Question Cognitive Level: Memory or Fundamental Knowledge X

Comprehension or Analysis

10 CFR Part 55 Content: 55.41 X

55.43

Comments:

BFN Unit 3	Unit Startup	3-GOI-100-1A Rev. 0082 Page 77 of 166

5.0 INSTRUCTION STEPS (continued)

[24.8] [INPO/C] **MONITOR** SRM/IRM instrumentation closely during rod pulls while approaching criticality, pausing between rod pulls as needed for neutron level stabilization. [INPO SER 89-006]

(R) _____ Initials _____ Time _____ Date

[24.9] **CONTINUE** withdrawing control rods in accordance with 3-SR-3.1.3.5(A).

(R) _____ Initials _____ Time _____ Date

NOTE

The following steps apply for all Control Rod Withdrawals and do not require a operator signoff for the steps. The actions should be reviewed by all personnel involved with withdrawing control rods.

[25] **MONITOR** Reactor power during rod withdrawals and perform the following for the associated conditions.

[25.1] **IF** single-notch withdrawals result in a Reactor period of less than 60 seconds, **THEN**

PERFORM the following:

[25.1.1] **REINSERT** the last control rod pulled to obtain a stable period greater than 60 seconds.

[25.1.2] **OBTAIN** Reactor Engineer, Reactivity Manager, and Shift Manager permission prior to subsequent control rod withdrawal.

[25.2] **IF** a Reactor period of less than 30 seconds is observed, **THEN**

PERFORM the following:

[25.2.1] **INSERT** control rods in accordance with 3-SR-3.1.3.5(A).

[25.2.2] **VERIFY** Reactor subcritical.

[25.2.3] **OBTAIN** Reactor Engineer, Reactivity Manager, and Shift Manager permission prior to subsequent control rod withdrawal.

[25.3] **IF** a Reactor period of less than 5 seconds is observed, **THEN**

SHUT DOWN the Reactor until a thorough assessment has been performed. (REFER TO 3-GOI-100-12A)

[29] **WITHDRAW** control rods to maintain a period of 100 seconds or greater as indicated on the following indicators on Panel 3-9-5:

- CHANNEL A PERIOD, 3-XI-92-7/44A. ☐
- CHANNEL B PERIOD, 3-XI-92-7/44B. ☐
- CHANNEL C PERIOD, 3-XI-92-7/44C. ☐
- CHANNEL D PERIOD, 3-XI-92-7/44D. ☐

(R) _____ _____ _____
Initials Time Date

			INSTRUCTOR NOTES
	i.	Performance of the heautp and cooldown rate monitoring surveillance is required 15 minutes prior to heatup and pressurization.	2-SR-3.4.9.1(1) Use ***"HUR"*** on ICS
3.	Review instruction steps 5.29 through 5.42		SRO in CR
	a.	If a single notch withdrawal results in a reactor period of less than 60 seconds, the last control rod pulled will be reinserted until a period of greater than 60 seconds is obtained, the Reactor Engineer, Reactivity Manager, and SM approval is required to resume rod withdrawal.	Obj. V.B.5.b Obj. V.C.5.b
	b.	If a reactor period of less than 30 seconds is observed, control rods shall be inserted until the reactor is subcritical, and obtain the Reactor Engineer, Reactivity Manager, and SM approval to resume rod withdrawal.	Obj. V.B.5.c Obj. V.C.5.c
	c.	If a reactor period of less than 5 seconds is observed, the reactor shall be shut down and cannot be restarted until an assessment has been performed.	Obj. V.B.5.d Obj. V.C.5.d

Examination Outline Cross-reference:

G2.1.6 (10CFR 55.41.10)
Ability to manage the control room crew during transients.

Level	RO
Tier #	3
Group #	
K/A #	G2.1.6
Importance Rating	3.8

Proposed Question: **# 67**

The Unit 3 Control Room crew observes the following plant indications:

- Reactor Power is 95%
- CONTROL AIR PRESS LOW, (3-9-20B Window 32), in alarm
- Control Rod 34-27 has drifted from position 42 to 34
- **ALL** other Control Rods are in their expected positions

In accordance with applicable AOIs, which ONE of the following actions is required?

A. Fully insert Control Rod 34-27 using the "Continuous Insert" method.

B. With RE assistance, restore Control Rod 34-27 from position 34 to 42.

C. Manually Scram the Reactor **AND** refer to 3-AOI-100-1, "Reactor Scram."

D. Verify the Scram air header pressure regulating valve is operating correctly.

Proposed Answer: **A**

Explanation (Optional):

A **CORRECT:** This is correct because per 3-AOI-85-5, "Rod Drift In" subsequent actions, if the Rod drifts more than 2 notches from its intended position, insert the control rod to 00 using continuous insert.

B INCORRECT: This is incorrect because the action is to drive the rod until it is fully inserted. Plausible in that this would be appropriate action if the control rod was 2 notches or less from its intended position.

C INCORRECT: This is incorrect because a scram is not required unless there is more than one rod drifting.

D INCORRECT: Plausible in that with an indication of low Control Air Pressure and a control rod drifting it is a logical conclusion that scram air header pressure is lowering with potential for Scram In / Out Valves to drift open. This is incorrect in that the problem is upstream of the pressure regulator as indicated by the low air pressure alarm. The input for this alarm is sensed upstream of the scram air header pressure regulating valve.

Technical Reference(s): 3-AOI-85-5 Rev 9 (Attach if not previously provided)

(Including version / revision number)

Proposed references to be provided to applicants during examination: NONE

Learning Objective: _____ (As available)

Question Source: Bank # X

Modified Bank # _____ (Note changes or attach parent)

New

Question History: Last NRC Exam GGNS 2009 # 8

(Optional - Questions validated at the facility since 10/95 will generally undergo less rigorous review by the NRC; failure to provide the information will necessitate a detailed review of every question.)

Question Cognitive Level: Memory or Fundamental Knowledge

Comprehension or Analysis X

10 CFR Part 55 Content: 55.41 X

55.43

Comments:

BFN Unit 3	Rod Drift In	3-AOI-85-5 Rev. 0009 Page 4 of 9

4.0 OPERATOR ACTIONS

4.1 Immediate Actions

[1] **IF** multiple rods are drifting into core, **THEN**

MANUALLY SCRAM Reactor. **REFER TO** 3-AOI-100-1.

4.2 Subsequent Actions

[1] **IF** the Control Rod travels greater than two notches from its intended position, **THEN**

INSERT Control Rod to position 00 using CONTINUOUS IN (otherwise **N/A**) ☐

Examination Outline Cross-reference:

G2.2.20 (10CFR 55.41.10)

Knowledge of the process for managing troubleshooting activities.

Level	RO	SRO
Tier #	3	----
Group #		----
K/A #	G2.2.20	
Importance Rating	2.6	----

Proposed Question: **# 68**

Which ONE of the following completes the statement?

Per MMDP-3, "Guidelines for Planning and Executing Troubleshooting Activities," a Troubleshooting Plan _____.

A. is normally owned by Operations.

B. is incorporated into an approved Work Order.

C. allows for fixing the equipment deficiency once the source is identified.

D. can be worked independently of a Work Order if waived by Maintenance.

Proposed Answer: **B**

Explanation (Optional):

A INCORRECT: Section 3.1.C of MMDP-3 outlines that Maintenance is expected to own the plan.

B **CORRECT:** Section 3.2.B of MMDP-3 outlines the requirement to incorporate the plan into an approved WO.

C INCORRECT: Section 1.0 of MMDP-3 outlines when a Troubleshooting plan ends. (The source of the deficiency is identified).

D INCORRECT: Section 3.2.B of MMDP-3 outlines the requirement to incorporate the plan into an approved WO, unless waived by the Shift Manager.

Technical Reference(s): MMDP-3 Rev 4 (Attach if not previously provided)

(Including version / revision number)

Proposed references to be provided to applicants during examination: NONE

Learning Objective: _____ (As available)

Question Source:

Bank #	
Modified Bank #	
New	X

(Note changes or attach parent)

Question History:

Last NRC Exam	

(Optional - Questions validated at the facility since 10/95 will generally undergo less rigorous review by the NRC; failure to provide the information will necessitate a detailed review of every question.)

Question Cognitive Level: Memory or Fundamental Knowledge **X**

Comprehension or Analysis

10 CFR Part 55 Content: 55.41 **X**

55.43

Comments:

NPG Standard Department Procedure	Guidelines For Planning And Execution of Troubleshooting Activities	MMDP-3 Rev. 0004 Page 5 of 30

1.0 PURPOSE

The purpose of this procedure is to provide the methods and controls for the troubleshooting of components, equipment and systems. This process may be performed to determine the root cause for the problem/failure of the component or subpart for extent of condition and recurrence control.

Troubleshooting is a term for the act performed to determine the unknown causes of an equipment malfunction. Actions being taken to correct a specific known problem are not considered to be troubleshooting and are not governed by this procedure. The troubleshooting process begins with reports of observed symptoms and progresses through the identification of the problem cause(s). The troubleshooting of a problem is completed when the problem source has been positively identified or a decision is made to terminate the troubleshooting because the problem cannot be identified.

Efforts should be made to separate the troubleshooting aspects of a problem from the actual fix of the problem. Distractions from the troubleshooting effort can occur if the focus is on the repair instead of determination of the cause of the problem. Actual implementation of corrective actions is dependent on other factors and may occur immediately following troubleshooting or at a later time.

The cornerstone for proper troubleshooting is a thorough description of the problem. As much available information should be provided to ensure successful resolution of the problem.

C. The expectation is for Maintenance to own troubleshooting activities unless otherwise specified by the Shift Manager or Maintenance & Mods Manager/designee.

D. If at any time during the troubleshooting effort unexpected plant equipment responses are observed, stop field work, place the system/plant in a safe configuration, and reevaluate the troubleshooting plan before proceeding.

3.2 Prerequisites

A. An appropriate approved maintenance work order is the work implementing document (WID) to authorize the troubleshooting activities and document the results. Reference MMDP-1 for planning requirements. This includes the requirements for 10CFR50.59 and/or 10CFR72.48 reviews for WOs as required by MMDP-1.

B. Any equipment problem requiring a troubleshooting plan in accordance with this procedure must have the plan approved and in place before work in the field may begin unless waived by the Shift Manager. If waived, the reason for waiver should be documented in the WID. The troubleshooting plan will be incorporated into the approved work order.

Examination Outline Cross-reference:

G2.2.22 (10CFR 55.41.5)
Knowledge of limiting conditions for operations and safety limits.

Level	RO
Tier #	3
Group #	
K/A #	G2.2.22
Importance Rating	4.0

Proposed Question: **# 69**

Given the following conditions on Unit 2:

- Reactor Power is 75%
- Total RCS Leakage is 5.1 gpm
- Unidentified Leakage is 2.6 gpm
- Unidentified Leakage has increased 2.1 gpm in the last 24 hours

Which ONE of the following describes RCS Leakage in relation to Technical Specification limits?

A. **ALL** RCS Leakage is within TS limits.

B. Total Leakage exceeds the TS limit.

C. Amount of Unidentified Leakage exceeds the TS limit.

D. Increase in Unidentified Leakage in previous 24 hours exceeds the TS limit.

Proposed Answer: **D**

Explanation (Optional):

A INCORRECT: Per TS 3.4.4, RCS Operational Leakage, Operational leakage shall be limited to ≤ 2 gpm increase in unidentified leakage in the previous 24 hour period in Mode 1. With increase at 2.1 gpm, this answer is incorrect.

B INCORRECT: Per TS 3.4.4, RCS Operational Leakage, Operational leakage shall be limited to ≤ 30 gpm total leakage averaged over previous 24 hours. With total leakage at 5.1 gpm, this answer is incorrect.

C INCORRECT: Per TS 3.4.4, RCS Operational Leakage, Operational leakage shall be limited to ≤ 5 gpm Unidentified leakage. With unidentified leakage at 2.6 gpm, this answer is incorrect.

D **CORRECT**: Per TS 3.4.4, RCS Operational Leakage, Operational leakage shall be limited to ≤ 2 gpm increase in unidentified leakage in the previous 24 hour period in Mode 1. With increase at 2.1 gpm, this limit is exceeded.

Technical Reference(s): U2 TS 3.4.4 (Attach if not previously provided)

(Including version / revision number)

Proposed references to be provided to applicants during examination: NONE

Learning Objective: _____ (As available)

Question Source: Bank #

Modified Bank # X (Note changes or attach parent)

New

Question History: Last NRC Exam VC Summer 08 #44

(Optional - Questions validated at the facility since 10/95 will generally undergo less rigorous review by the NRC; failure to provide the information will necessitate a detailed review of every question.)

Question Cognitive Level: Memory or Fundamental Knowledge X

Comprehension or Analysis

10 CFR Part 55 Content: 55.41 X

55.43

Comments:

VC Summer

44. 038 G2.2.22 1

Given the following plant conditions:

- Reactor power is 75%.
- RCS leak rate data is as follows:
  - Total RCS leakage rate is 9.1 gpm.
  - Leakage to PRT is 7.0 gpm.
  - Leakage to the Reactor Coolant Drain Tank is 1.3 gpm.
  - Total primary to secondary leakage is 0.33 gpm.
    - SG 1 – 0.09 gpm
    - SG 2 – 0.17 gpm
    - SG 3 – 0.07 gpm

Which ONE (1) of the following describes RCS leakage in relation to Technical Specification limits?

A. Identified leakage exceeds the TS limit

B. Unidentified leakage exceeds the TS limit

C. Primary to Secondary leakage exceeds the TS limit

D. All RCS leakage is within TS limits

A Incorrect. Identified can be 10 GPM, it is 8.63
B Incorrect. Unidentified can be 1 GPM, it is 0.47
C Correct. Leakage through any 1 SG can only be 150 GPD. SG B exceeds the limit
D Incorrect. Primary to secondary limits are exceeded

Equipment Control Knowledge of limiting conditions for operations and safety limits.

KA Value: 3.4

Question 47

Reference Provided to Applicants: NONE

Technical Reference:

Lesson Objective:

10CFR55:

Comments:

Answer: C

3.4 REACTOR COOLANT SYSTEM (RCS)

3.4.4 RCS Operational LEAKAGE

LCO 3.4.4 RCS operational LEAKAGE shall be limited to:

a. No pressure boundary LEAKAGE;

b. ≤ 5 gpm unidentified LEAKAGE; and

c. ≤ 30 gpm total LEAKAGE averaged over the previous 24 hour period; and

d. ≤ 2 gpm increase in unidentified LEAKAGE within the previous 24 hour period in MODE 1.

APPLICABILITY: MODES 1, 2, and 3.

Examination Outline Cross-reference:

G2.3.14 (10CFR 55.41.12)
Knowledge of radiation or contamination hazards that may arise during normal, abnormal, or emergency conditions or activities.

Level	RO
Tier #	3
Group #	
K/A #	G2.3.14
Importance Rating	3.4

Proposed Question: **# 70**

The Unit 3 Turbine Building AUO reports that Hydrogen Water Chemistry System has just been placed into service per 3-OI-4,"Hydrogen Water Chemistry System." The Power Determined Setpoint is set at a 14 scfm Hydrogen injection rate.

Based on this injection rate, which ONE of the following completes the statement?

Main Steam Line Radiation levels will be _____.

A. AS EXPECTED, based on this being the NORMAL injection rate.

B. HIGHER than anticipated, based on a HIGHER than normal injection rate.

C. LOWER than anticipated, based on a HIGHER than normal injection rate.

D. LOWER than anticipated, based on a LOWER than normal injection rate.

Proposed Answer: **B**

Explanation (Optional):

A INCORRECT: Part a = incorrect, An increase in H2 injection rate will cause an increase in MSL rad levels, due to the excess carryover of N16 / ammonia. Part b = incorrect, Normal rate is 12 scfm not 14. Units 1 & 2 are 14 scfm.

B **CORRECT:** Part a = correct, An increase in H2 injection rate will cause an increase in MSL rad levels, due to the excess carryover of N16 / ammonia. Part b = correct, Normal rate is 12 scfm not 14. Units 1 & 2 are 14 scfm

C INCORRECT: Part a = incorrect, An increase in H2 injection rate will cause an increase in MSL rad levels, due to the excess carryover of N16 / ammonia. Part b = correct, Normal rate is 12 scfm not 14. Units 1 & 2 are 14 scfm

D INCORRECT: Part a = incorrect, An increase in H2 injection rate will cause an increase in MSL rad levels, due to the excess carryover of N16 / ammonia. Part b = incorrect, Normal rate is 12 scfm not 14. Units 1 & 2 are 14 scfm

Technical Reference(s): 1/2/3-OI-4 Rev 9/35/19 (Attach if not previously provided)

OPL171.220 Rev 5 (Including version / revision number)

Proposed references to be provided to applicants during examination: NONE

Learning Objective: V.B.6 (As available)

Question Source: Bank # **0707 Audit # 74**

Modified Bank # (Note changes or attach parent)

New

Question History: Last NRC Exam

(Optional - Questions validated at the facility since 10/95 will generally undergo less rigorous review by the NRC; failure to provide the information will necessitate a detailed review of every question.)

Question Cognitive Level: Memory or Fundamental Knowledge

Comprehension or Analysis **X**

10 CFR Part 55 Content: 55.41 **X**

55.43

Comments:

Original Question, 0707 Audit, RO# 74, G2.3.14:

COMP	3	RAD CON	2.3.14	3.4 / 3.8	BOTH	8/25/08 - BKC

The Unit 3 Assistant Unit Operator reports that Hydrogen Water Chemistry System has just been placed into service per 3-OI-4, Hydrogen Water Chemistry System, section 5.4. The Power Determined Setpoint is set at a14 scfm hydrogen injection rate.

Based on this injection rate, how are the Main Steam Line Radiation levels expected to respond?

A✓ HIGHER than anticipated, due to a HIGHER than normal Hydrogen injection rate.

B. LOWER than anticipated, due to a HIGHER than normal Hydrogen injection rate

C. LOWER than anticipated, due to a LOWER than normal Hydrogen injection rate

D. AS anticipated, due to the CORRECT normal Hydrogen injection rate

BFN Unit 3	Hydrogen Water Chemistry System	3-OI-4 Rev. 0019 Page 10 of 87

3.3 **The following precautions pertain to Hydrogen Water Chemistry System operation: (continued)**

D. Important hydrogen injection flow rate values are as follows:

1. Minimum H_2 Injection Rate allowed to be entered on the OIU: 5 scfm. This is the injection rate normally used when lowering HWC for ALARA considerations or maintenance purposes per Section 6.0, Normal Operations. When 5 scfm is entered in the OIU for Automatic/Power Determined Mode, H_2 Injection Rate will lower automatically to a new scfm depending on the new power level, i.e., 5 scfm for 100% power; when power is lowered to 90%, the injection rate will automatically roll back to 4.5 scfm and so on.

2. Normal H_2 Injection Rate (100% Reactor Power): 12 scfm (This value is set by Chemistry with the performance of CI-13.1, Chemistry Program. Chemistry will notify Operations should this value change). "Off Normal" operating conditions may require other injection rates which must be coordinated with the System Engineer, Chemistry, Radiation Protection, and approved by the Shift Manager.

BFN Unit 3	Hydrogen Water Chemistry System	3-OI-4 Rev. 0019 Page 39 of 87

5.4 **Placing the Hydrogen Water Chemistry System in Service (continued)**

[12.10] **CHECK** the following indications on the OIU:

- Hydrogen flow ramps up to 5 SCFM. ☐
- Oxygen flow ramps up to 2.5 SCFM after a time delay. ☐
- Offgas oxygen concentration stabilizes at 21% ± 5%. ☐
- Power Determined Setpoint (F6) is set at 12 SCFM **REFER TO** Section 8.1. ☐

BFN Unit 2	Hydrogen Water Chemistry System	2-OI-4 Rev. 0035 Page 10 of 88

3.3 **Hydrogen Water Chemistry System Operation (continued)**

D. Important hydrogen injection flow rate values are as follows:

1. Minimum H_2 Injection Rate allowed to be entered on the OIU is 5 scfm. This is the injection rate normally used when lowering HWC for ALARA considerations or maintenance purposes per Section 6.0, Normal Operations. When 5 scfm is entered in the OIU for Automatic/Power Determined Mode, H_2 Injection Rate will lower automatically to a new scfm depending on the new power level, i.e., 5 scfm for 100% power; when power is lowered to 90%, the injection rate will automatically roll back to 4.5 scfm, and so on.

2. Normal H_2 Injection Rate (100% Reactor Power) is 14 scfm. Due to current EPU spanned software installed on U2 HWC computer, Ops is requested to input a 16 scfm H2 injection value in order to receive the required 14 scfm actual H2 injection flow at 100% Power. This value, 14 scfm, is determined by Chemistry with the performance of CI-13-1, Chemistry Program. Chemistry will notify Operations should this value change). "Off Normal" operating conditions may require other injection rates which are to be coordinated with the System Engineer, Chemistry, Radiation Protection, and approved by the Shift Manager.

BFN Unit 1	Hydrogen Water Chemistry System	1-OI-4 Rev. 0009 Page 11 of 92

3.0 **PRECAUTIONS AND LIMITATIONS (continued)**

4. Important hydrogen injection flow rate values are as follows:

a. Minimum H_2 Injection Rate allowed to be entered on the OIU is 5 scfm. This is the injection rate normally used when lowering HWC for ALARA considerations or maintenance purposes per Section 6.0, Normal Operations. When 5 scfm is entered in the OIU for Automatic/Power Determined Mode, H_2 Injection Rate will lower automatically to a new scfm depending on the new power level, i.e., 5 scfm for 100% power; when power is lowered to 90%, the injection rate will automatically roll back to 4.5 scfm and so on.

b. Normal H_2 Injection Rate (100% Reactor Power) is 14 scfm. Due to current EPU spanned software installed on U1 HWC computer, Chemistry has requested Ops to input a 16 scfm H2 injection value in order to receive the required 14 scfm actual H2 injection flow at 100% Power. This value, 14 scfm, is determined by Chemistry with the performance of CI-13-1, Chemistry Program. Chemistry will notify Operations should this value change). "Off Normal" operating conditions may require other injection rates which are to be coordinated with the System Engineer, Chemistry, Radiation Protection, and approved by the Shift Manager.

	INSTRUCTOR NOTES
a. These compounds are circulated through the reactor coolant systems and are ultimately removed by the RWCU System	
b. A smaller fraction of the N^{16} is carried over in the steam in the form of nitrogen gas (N_2) and ammonia (NH_3)	Predominate contributor to background radiation levels
4. H_2 injection alters the N^{16} carryover ratio	
a. Concentrations of NO_3, NO_2, and NO decrease	
b. Concentration of NH_3 increases	Ammonia
(1) A gas	
(2) High water solubility	
5. The net production of N^{16} is not influenced by hydrogen injection	
6. The increased dose rates are due to the increased ease with which N^{16} gets out of the reactor and into the steam pipes when in the NH_3 form	We can maintain up to 2.7 ppm injection concentration.
7. The initial U2 run was the first week in Nov. 1999. Up to 90 scfm hydrogen was injected. Average MSL radiation level increased approximately 5 times normal	MSL 'B' was highest at 5.2 times normal
8. Addition of noble metals to reactor water	
a. Noble metals decompose during reactor startup or shutdown	Rubidium and Iridium
b. During this time it produces a thin layer of noble metal on wetted surfaces	
c. The ECP on these surfaces are reduced significantly during subsequent operation	

Examination Outline Cross-reference:

G2.3.4 (10CFR 55.41.12)
Knowledge of radiation exposure limits under normal or emergency conditions.

Level	RO
Tier #	3
Group #	
K/A #	G2.3.4
Importance Rating	3.2

Proposed Question: **# 71**

The following 4 volunteers have agreed to receive an Emergency Exposure to save a life. **ALL** individual capabilities are considered equal with the exceptions noted below:

Individual	Lifetime Exposure	Previous Emergency Exposure	Age	Gender
1	28 Rem	26 Rem	38	F
2	41 Rem	16 Rem	25	M
3	35 Rem	31 Rem	28	M
4	40 Rem	15 Rem	35	M

Which ONE of the above individuals would be the best candidate to be selected first?

A. Individual 1.

B. Individual 2.

C. Individual 3.

D. Individual 4.

Proposed Answer: **D**

Explanation (Optional):

A INCORRECT: Since an emergency exposure above 25 Rem has already been received by this individual, EPIP-15 section 3.3 states that those individuals shall not participate in any further emergency exposure assignments.

B INCORRECT: He has more emergency exposure and is younger than # 4. EPIP-15 section 3.3 defines as older individuals are better choices.

C INCORRECT: Since an emergency exposure above 25 Rem has already been received by this individual, EPIP-15 section 3.3 states that those individuals shall not participate in any further emergency exposure assignments.

D **CORRECT:** He is older than # 2 and has less emergency exposure. EPIP-15 section 3.3 defines as older individuals are better choices.

Technical Reference(s): EPIP-15 Rev 9 (Attach if not previously provided)

(Including version / revision number)

Proposed references to be provided to applicants during examination: NONE

Learning Objective: _____ (As available)

Question Source: Bank # 0407A G2.4.3

Modified Bank # _____ (Note changes or attach parent)

New _____

Question History: Last NRC Exam 0407A

(Optional - Questions validated at the facility since 10/95 will generally undergo less rigorous review by the NRC; failure to provide the information will necessitate a detailed review of every question.)

Question Cognitive Level: Memory or Fundamental Knowledge

Comprehension or Analysis X

10 CFR Part 55 Content: 55.41 X

55.43

Comments:

BROWNS FERRY	EMERGENCY EXPOSURES	EPIP-15

3.0 INSTRUCTIONS

3.3 **Guidance for All Emergency Dose Limits**

3.3.1 The exposure of personnel during emergency operations shall be maintained As Low As Reasonably Achievable (ALARA).

3.3.2 Internal exposure should be minimized by the use of respiratory protection equipment. Respirator Protection Factors are provided in Standard Programs and Processes (SPP) 5.10. If a projected dose to the thyroid is expected to exceed 10 rem during emergency conditions, Potassium Iodide (KI) should be issued. EPIP-14 contains information regarding issuance and precautions for the use of KI.

3.3.3 Personnel undertaking an emergency operation in which the dose will exceed 10 CFR 20.1201 entitled "Occupational Dose for Adults" limits shall do so on a voluntary basis and with full awareness of the risks involved, including the numerical levels of dose at which acute effects of radiation will be incurred and numerical estimates of the risk of delayed effects as depicted on Appendix A. Acknowledgment of this decision shall be documented on Appendix B of this procedure by the individual involved in this activity.

3.3.4 Other factors being equal, older volunteers should be selected first.

3.3.5 Other factors being equal, selection of female volunteers capable of reproduction should be avoided.

3.3.6 Exposures under these conditions shall be limited to a once in a lifetime. Personnel who have received previous accident or emergency exposures in excess of 25 rem TEDE shall not participate in further emergency exposure assignments.

3.4 **Dose Limits for Workers During Emergencies**

3.4.1 Doses to all workers during emergencies should, to the extent practicable be limited to 10 CFR 20.1201 limits. There are, however, some emergency situations for which higher emergency exposures may be justified. Whenever these situations are justified and ALARA considerations have been evaluated the following limits can be administered.

3.4.2 Radiation Protection (RP) considers the to-date annual accrued dose to individuals when establishing the maximum dose limits for workers during emergencies. The to-date annual accrued dose would be subtracted from the applicable emergency dose limit to determine the authorized allowable dose for the emergency.

3.4.3 Dose Limits for the Protection of Valuable Property

Dose Limit (Rem)	Receptor
10	Whole Body (TEDE)
30	Lens of the Eye
100	All Other Organs

3.4.4 Dose Limits for Lifesaving Activities and the Protection of Large Populations

Dose Limit (Rem)	Receptor
25	Whole Body (TEDE)
75	Lens of the Eye
250	All Other Organs

Examination Outline Cross-reference:

G2.3.7 (10CFR 55.41.10)
Ability to comply with radiation work permit requirements during normal or abnormal conditions.

Level	RO
Tier #	3
Group #	
K/A #	G2.3.7
Importance Rating	3.5

Proposed Question: **# 72**

Three operators are in the Unit 1 RHR Loop II Pump Room performing the Quarterly Pump Surveillance. The operator monitoring pump suction pressure receives a Dose Rate Alarm **ONLY** on his Electronic Dosimeter (ED).

Which ONE of the following identifies the required actions in accordance with RCI 9.1, "Radiation Work Permits," as a result of the Dose Rate Alarm **ONLY**?

A. **ONLY** the Individual who received the alarm must leave the area **AND** he **CANNOT** return until dose rates evaluated by RP.

B. **ONLY** the Individual who received the alarm must leave the area **AND** he must meet with the RP Manager prior to returning to the RCA.

C. **ALL** work activities are stopped; **ALL** personnel must leave the area **AND CANNOT** return until dose rates evaluated by RP.

D. **ALL** work activities are stopped; **ALL** personnel must leave the area **AND** the individual who received the alarm must meet with the RP Manager prior to returning to the RCA.

Proposed Answer: **C**

Explanation (Optional):

A INCORRECT: First part is incorrect. Work must be stopped and all individual in the area must back out. Second part is correct. Answer is plausible in that this would be the correct answer if the individual had received a dose alarm instead of a dose rate alarm.

B INCORRECT: First and second part are incorrect. Plausible in that the requirement to meet with the RPM prior to return to RCA would be the correct action for a dose alarm instead of a dose rate alarm.

C **CORRECT:** Per RCI 9.1, "Radiation Work Permits," the dose rate alarm setting will serve as the back out dose rate for the RWP. If a dose rate alarm is received, all work activities will be stopped, and all personnel in the work area must back out. Further entries will be denied until dose rates are evaluated by RP personnel.

D INCORRECT: First part is correct but second part is incorrect as explained above.

Technical Reference(s): RCI-9.1 Rev 61 (Attach if not previously provided)
(Including version / revision number)

Proposed references to be provided to applicants during examination: NONE

Learning Objective: _____ (As available)

_____

Question Source: Bank # / Modified Bank # (Note changes or attach parent)

New X

Question History: Last NRC Exam

(Optional - Questions validated at the facility since 10/95 will generally undergo less rigorous review by the NRC; failure to provide the information will necessitate a detailed review of every question.)

Question Cognitive Level: Memory or Fundamental Knowledge X

Comprehension or Analysis

10 CFR Part 55 Content: 55.41 X

55.43

Comments:

BFN Unit 0	Radiation Work Permits	RCI-9.1 Rev. 0061 Page 13 of 49

3.2.7 Back Out Dose Rate

The dose rate alarm setting will also serve as the "back-out" dose rate for the RWP, unless otherwise specified by Rad Ops. If the dose rate alarm is received, or if the same dose rate is observed by Rad Ops personnel providing job coverage, all work activities will be stopped and all personnel in the work area will "back out". Further entries will be denied until the dose rates are evaluated by RP personnel.

Examination Outline Cross-reference:

G2.4.18 (10CFR 55.41.10)
Knowledge of the specific bases for EOPs.

Level	RO
Tier #	3
Group #	
K/A #	G2.4.18
Importance Rating	3.3

Proposed Question: **# 73**

Which ONE of the following completes the statement?

If Primary Containment Water Level **CANNOT** be maintained below __**(1)**__, injection from sources outside of Primary Containment are secured to prevent __**(2)**__.

A. **(1)** 105 feet
(2) a loss of Primary Containment integrity due to over pressurization.

B. **(1)** 105 feet
(2) breaking MSRV Tailpipe supports due to hydraulic loading.

C. **(1)** 55 feet
(2) a loss of Primary Containment integrity due to over pressurization.

D. **(1)** 55 feet
(2) breaking MSRV Tailpipe supports due to hydraulic loading.

Proposed Answer: **A**

Explanation (Optional):

A **CORRECT:** Part 1 = correct, EOI Program Manual – section 0-V-C. Part 2 = correct, EOI Program Manual – section 0-V-C

B INCORRECT: Part 1 = correct, EOI Program Manual – section 0-V-C. Part 2 = incorrect, these supports are not a concern, but the candidate may confuse this with MSRVTP limit (Curve 4).

C INCORRECT: Part 1 = incorrect, 105' is correct. Candidate may confuse 55, due to this being the pressure value, not level. Part 2 = incorrect,

D INCORRECT: Part 1 = incorrect, 105' is correct. Candidate may confuse 55, due to this being the pressure value, not level. Part 2 = incorrect, these supports are not a concern, but the candidate may confuse this with MSRVTP limit (Curve 4).

Technical Reference(s): EOI Program Manual – section 0-V-C Rev 1 (Attach if not previously provided)

(Including version / revision number)

Proposed references to be provided to applicants during examination: NONE

Learning Objective: V.B.12 (As available)

Question Source: Bank # / Modified Bank # (Note changes or attach parent)

New X

Question History: Last NRC Exam

(Optional - Questions validated at the facility since 10/95 will generally undergo less rigorous review by the NRC; failure to provide the information will necessitate a detailed review of every question.)

Question Cognitive Level: Memory or Fundamental Knowledge X

Comprehension or Analysis

10 CFR Part 55 Content: 55.41 X

55.43

Comments:

EOI-1, RPV CONTROL BASES | **EOI PROGRAM MANUAL SECTION 0-V-C**

DISCUSSION: STEP RC/L-3 (Continued)

When plant conditions are such that a non-isolable primary system break exists, injection systems will increase RPV water level until it reaches elevation of the break. Once this event occurs, makeup water will spill from the break into primary containment. This event, coupled with injection systems taking suction from sources external to primary containment, will cause suppression pool level, and eventually primary containment water level, to increase. If this situation were to continue, primary containment water level would eventually reach elevation of the highest primary containment vent. When the primary containment vent becomes submerged, the effective primary containment venting capability is lost, which may result in a complete and uncontrolled loss of primary containment integrity due to overpressurization.

These circumstances require injection into the RPV and primary containment to be stopped from those systems taking suction external to primary containment. This action is required to stop any further increase in primary containment water level even though adequate core cooling may not be assured. With no assurance as to where containment may fail, an attendant loss of suppression pool must be assumed, followed by a complete and unrecoverable loss of adequate core cooling. With a degraded core condition and loss of containment integrity, substantial amounts of radioactivity may be released to the general environment.

Therefore, when a mutually exclusive decision between maintaining adequate core cooling and assuring primary containment integrity must be made, EOIs preferentially choose to maintain primary containment integrity in order to protect against uncontrolled release of radioactivity to the general public from a degraded core condition.

Examination Outline Cross-reference:

G2.4.26 (10CFR 55.41.10)
Knowledge of facility protection requirements including fire brigade and portable fire fighting equipment usage.

Level	RO
Tier #	3
Group #	
K/A #	G2.4.26
Importance Rating	3.1

Proposed Question: **# 74**

A Unit 2 Reactor Building / Refuel Floor fire has been called into the Control Room. 0-AOI-26-1, "Fire Response," **AND** EPIP-17,"Fire Emergency Procedure," have been entered. The Incident Commander requests smoke clearing support.

Which ONE of the following describes the **MOST to LEAST PREFERRED** systems to use in support of the smoke clearing activity?

A. Refuel Zone fans, portable fans / smoke ejectors, Standby Gas Treatment fans.

B. Portable fans / smoke ejectors, Standby Gas Treatment fans, Refuel Zone fans.

C. Refuel Zone fans, Standby Gas Treatment fans, portable fans / smoke ejectors.

D. Standby Gas Treatment fans, Portable fans / smoke ejectors, Refuel Zone fans.

Proposed Answer: **A**

Explanation (Optional):

A **CORRECT:** 0-AOI-26-1 directs system used in smoke removal. It cautions the use of SBGT, and the impact of using, making it the least desired choice.

B INCORRECT: 0-AOI-26-1 directs system used in smoke removal. It cautions the use of SBGT, and the impact of using, making it the least desired choice.

C INCORRECT: 0-AOI-26-1 directs system used in smoke removal. It cautions the use of SBGT, and the impact of using, making it the least desired choice.

D INCORRECT: 0-AOI-26-1 directs system used in smoke removal. It cautions the use of SBGT, and the impact of using, making it the least desired choice.

Technical Reference(s): EPIP-17 Rev 30 (Attach if not previously provided)

0-AOI-26-1 Rev 11 (Including version / revision number)

Proposed references to be provided to applicants during examination: NONE

Learning Objective: _____ (As available)

Question Source:

Bank #	0707 AUDIT #73
Modified Bank #	
New	
Last NRC Exam	

(Note changes or attach parent)

Question History:

(Optional - Questions validated at the facility since 10/95 will generally undergo less rigorous review by the NRC; failure to provide the information will necessitate a detailed review of every question.)

Question Cognitive Level: Memory or Fundamental Knowledge **X**

Comprehension or Analysis

10 CFR Part 55 Content: 55.41 **X**

55.43

Comments:

BFN Unit 0	Fire Response	0-AOI-26-1 Rev. 0011 Page 8 of 32

4.2 Subsequent Actions (continued)

NOTES

1) The ventilation systems can be restarted for smoke removal provided a PCIS Group 6 isolation is **NOT** required and radioactive release limits will **NOT** be exceeded.
2) It may be necessary to wear self-contained breathing apparatus to manually align ventilation dampers.
3) Damper locations are given in 1(2)(3)-OI-30B and 1(2)(3)-OI-30A valve lineup checklists.
4) If SBGT train is run to remove smoke, the train will be technically inoperative thereafter. System Engineering should be contacted to determine tests and SI/SRs necessary to re-establish operability. Since the SGT System is common to all three units, the Unit Operator on each unit should stay fully aware of the system status and condition at all times. The Unit Operators should communicate to each other any change in system status.
5) Coordination of changes to ventilation system alignment with the Fire Brigade Leader is required to mitigate the effects of the fire.
6) The Operators with no SSI Attachment assigned or with an Attachment assigned for long term initial actions (greater than two hours) should be utilized to align ventilation system dampers/fans as necessary.

[7] **WHEN** directed by Fire Brigade Leader, Incident Commander, or Shift Manager, **THEN**

- **MANUALLY ALIGN** ventilation system dampers as necessary and ☐
- **PLACE** ventilation systems in service to remove smoke from affected area. ☐

[8] **WHEN** directed by Fire Brigade Leader, Incident Commander, or Shift Manager, **THEN**

USE additional smoke removal equipment such as portable fans and smoke ejectors for smoke removal. ☐

. . .

[10] **IF** Unit 2 Reactor Bldg needs smoke removal, **THEN**

PERFORM the following:

[10.1] **START** Unit 2 Reactor Zone Supply and Exhaust Fans as necessary. **REFER TO** 2-OI-30B. ☐

[10.2] **START** Unit 2 Refuel Zone Supply and Exhaust Fans as necessary. **REFER TO** 2-OI-30A. ☐

[10.3] **START** SGT as necessary. **REFER TO** 0-OI-65. ☐

[10.4] **WHEN** smoke removal has been completed, **THEN**

PERFORM the following as applicable:

- **RESTORE** Unit 2 reactor zone ventilation to normal. **REFER TO** 2-OI-30B. ☐
- **RESTORE** Unit 2 refuel zone ventilation to normal. **REFER TO** 2-OI-30A. ☐
- **IF** SGT System is operating for smoke removal, **THEN**

  RESTORE it to standby readiness. **REFER TO** 0-OI-65. ☐

Examination Outline Cross-reference:

G2.4.6 (10CFR 55.41.10)

- Knowledge of EOP mitigation strategies.

Level	RO
Tier #	3
Group #	
K/A #	G2.4.6
Importance Rating	3.7

Proposed Question: **# 75**

An ATWS has occurred on Unit 2 with the following plant conditions:

- Reactor Water Level is currently being controlled (+) 2 to (+) 51 inches with CRD
- Suppression Pool Temperature 92° F and stable
- **ALL** APRM downscale lights are illuminated
- 19 Control Rods failed to insert
- **ALL** SRVs are closed

Which ONE of the following completes the statement?

Reactor Recirc Pumps __**(1)**__ required to be tripped **AND** the SLC Pumps __**(2)**__required to be started.

A. **(1)** are
(2) are

B. **(1)** are **NOT**
(2) are

C. **(1)** are
(2) are **NOT**

D. **(1)** are **NOT**
(2) are **NOT**

Proposed Answer: **D**

Explanation (Optional):

A INCORRECT: Per the RC/Q leg of EOI-1, Recirc pumps are only tripped if power is >5% or unknown and SLC is not injected if Suppression Pool Temperature will not reach 110° F.

B INCORRECT: Per the RC/Q leg of EOI-1, SLC is not injected if Suppression Pool Temperature will not reach 110° F.

C INCORRECT: Per the RC/Q leg of EOI-1, Recirc pumps are only tripped if power is >5% or unknown.

D **CORRECT**: Per the RC/Q leg of EOI-1, Recirc pumps are only tripped if power is >5% or unknown and SLC is not injected if Suppression Pool Temperature will not reach 110° F.

Technical Reference(s): 2-EOI-1 Rev 12 (Attach if not previously provided)

(Including version / revision number)

Proposed references to be provided to applicants during examination: NONE

Learning Objective: V.B.9 / V.B.11 (As available)

Question Source: Bank # X

Modified Bank # (Note changes or attach parent)

New

Question History: Last NRC Exam Brunswick 08 #69

(Optional - Questions validated at the facility since 10/95 will generally undergo less rigorous review by the NRC; failure to provide the information will necessitate a detailed review of every question.)

Question Cognitive Level: Memory or Fundamental Knowledge

Comprehension or Analysis X

10 CFR Part 55 Content: 55.41 X

55.43

Comments:

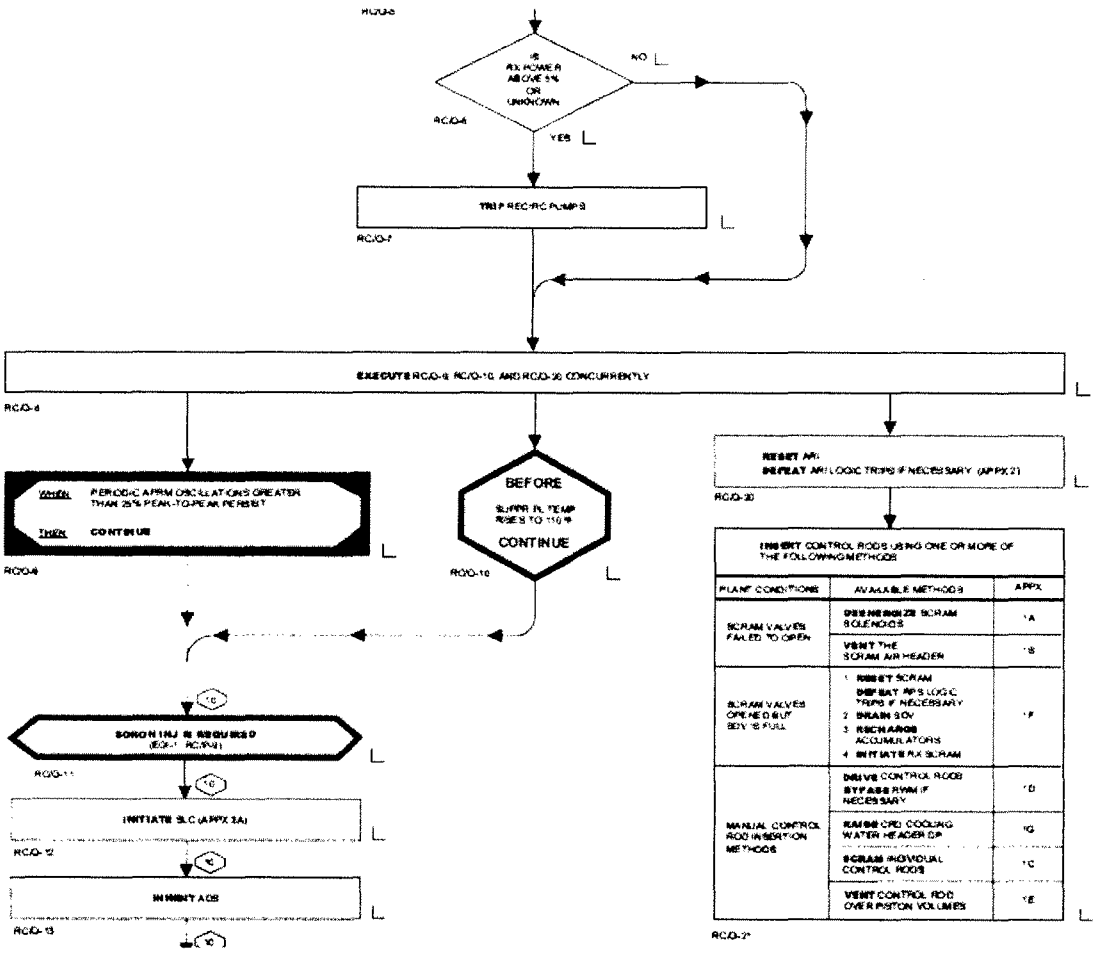
IS RX POWER ABOVE 5% OR UNKNOWN
NO
YES
TRIP REC/RC PUMPS
EXECUTE RC/Q-8, RC/Q-10 AND RC/Q-30 CONCURRENTLY
WHEN PERIODIC APRM OSCILLATIONS GREATER THAN 25% PEAK-TO-PEAK PERSIST
THEN CONTINUE
BEFORE
CONTINUE
RESET ARI
REPEAT ARI LOGIC TRIPS IF NECESSARY (APPX 21)
INSERT CONTROL RODS USING ONE OR MORE OF THE FOLLOWING METHODS
PLANT CONDITIONS
AVAILABLE METHODS
APPX
SCRAM VALVES FAILED TO OPEN
DEENERGIZE SCRAM SOLENOIDS
VENT THE SCRAM AIR HEADER
SCRAM VALVES OPENED BUT BDV IS FULL
1 RESET SCRAM
DEFEAT RPS LOGIC TRIPS IF NECESSARY
2 DRAIN SDV
3 RECHARGE ACCUMULATORS
4 INITIATE RX SCRAM
MANUAL CONTROL ROD INSERTION METHODS
DRIVE CONTROL RODS
BYPASS RWM IF NECESSARY
RAISE CRD COOLING WATER HEADER DP
SCRAM INDIVIDUAL CONTROL RODS
VENT CONTROL ROD OVER PISTON VOLUMES
INITIATE SLC (APPX 3A)
INHIBIT ADS