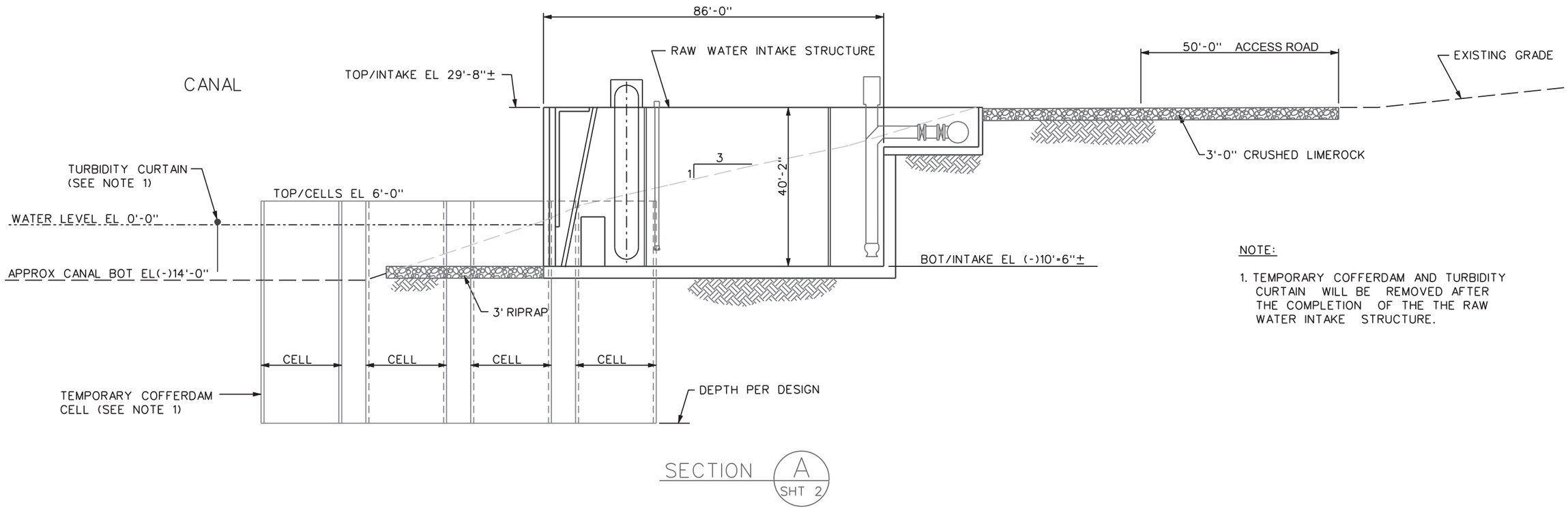

NOTE:

1. TEMPORARY COFFERDAM AND TURBIDITY CURTAIN WILL BE REMOVED AFTER THE COMPLETION OF THE THE RAW WATER INTAKE STRUCTURE.

SOURCE: STONE & WEBSTER, INC.

Progress Energy Florida

Levy Nuclear Plant
Units 1 and 2
Part 3, Environmental Report

Cooling Water Intake Structure
Section View

FIGURE 3.3-4

Rev 0