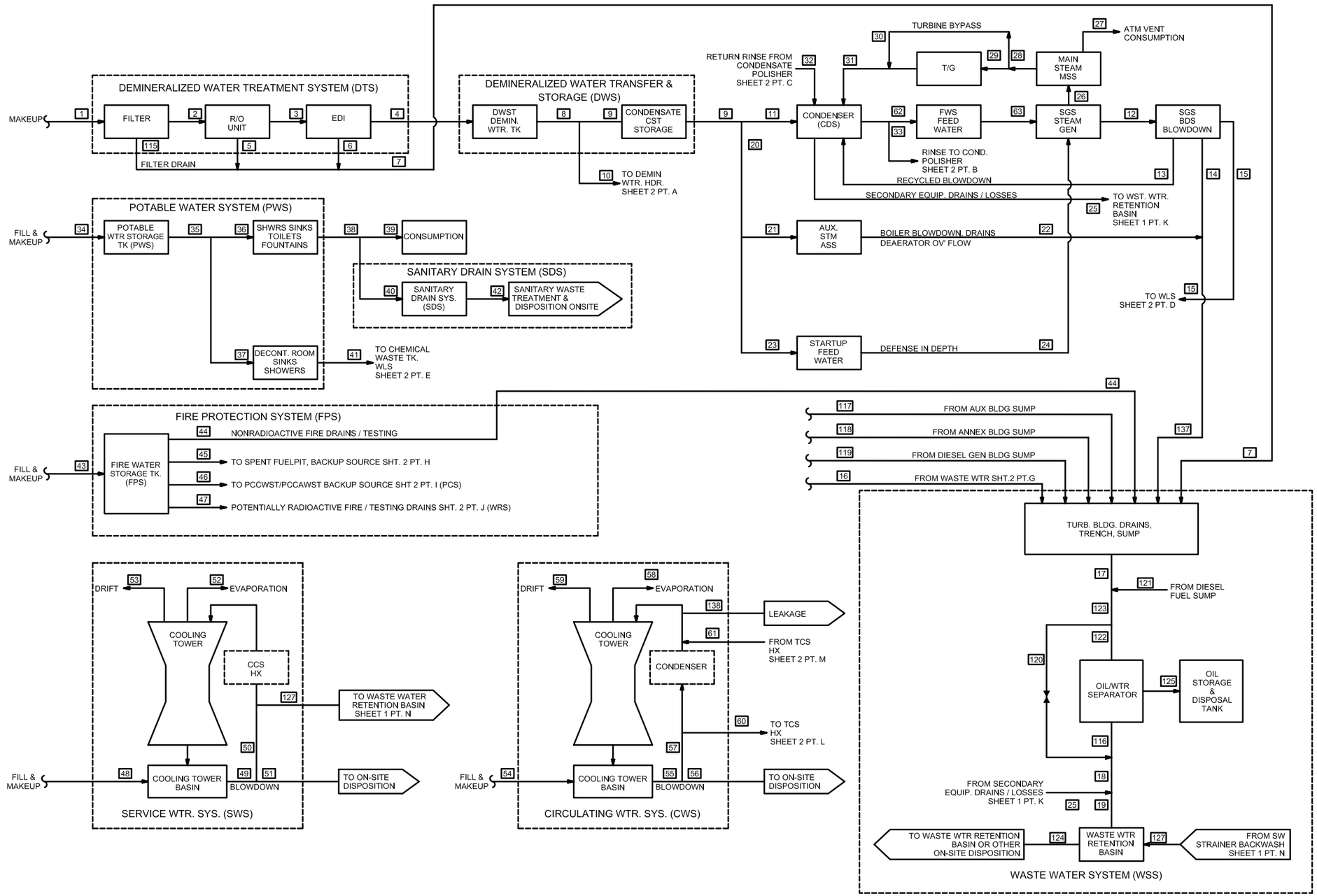

FLOW PATH INDICATOR VALUES LINK TO TABLE 3.3-1 FLOW RATES

Progress Energy Florida

Levy Nuclear Plant
Units 1 and 2
Part 3, Environmental Report

AP1000 Water Usage
Flow Paths (Sheet 1 of 2)
FIGURE 3.3-1

Rev 0

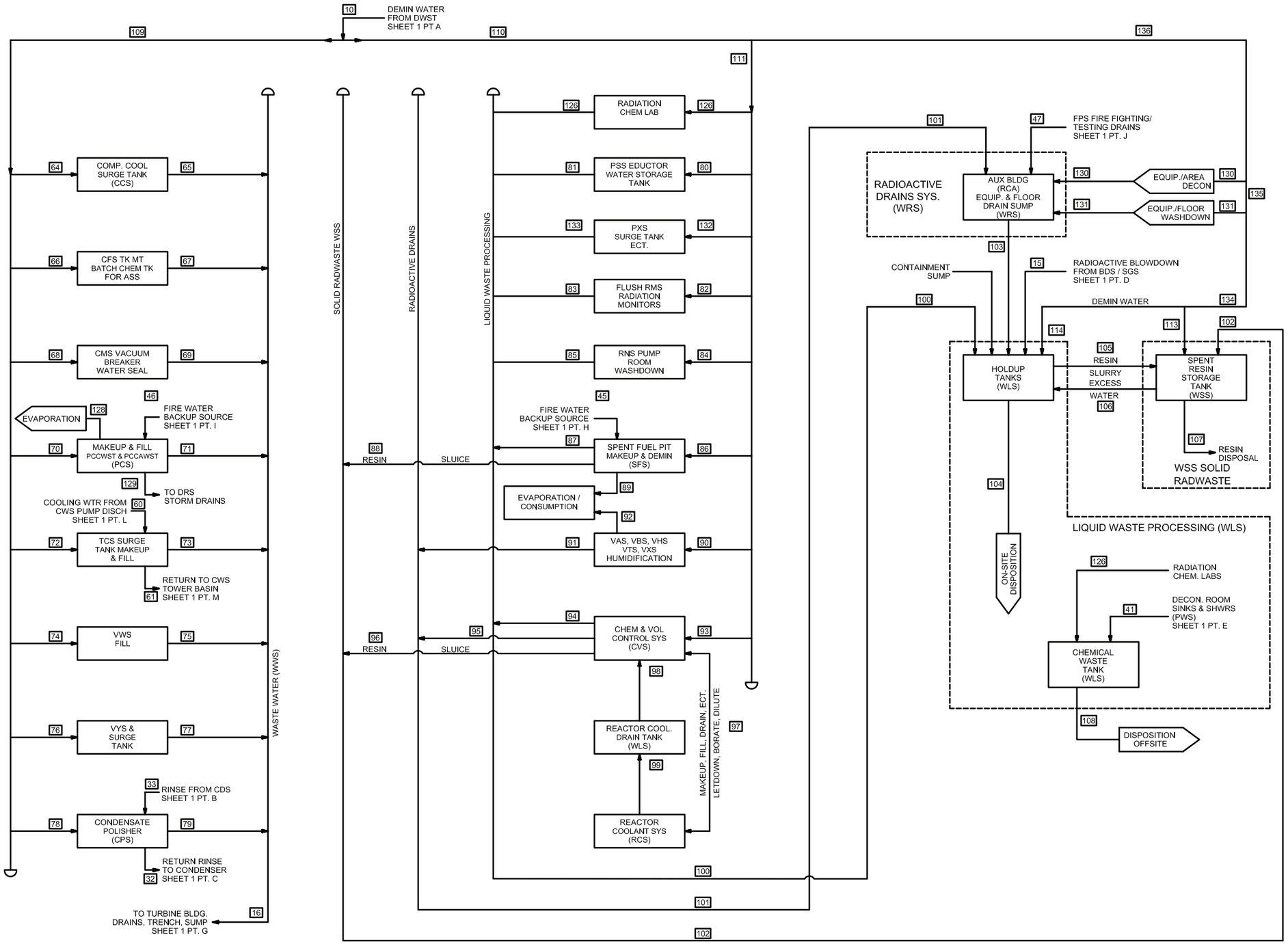

FLOW PATH INDICATOR VALUES LINK TO TABLE 3.3-1 FLOW RATES

Progress Energy Florida

Levy Nuclear Plant
Units 1 and 2
Part 3, Environmental Report

AP1000 Water Usage
Flow Paths (Sheet 2 of 2)
FIGURE 3.3-1

Rev 0